DRG. No. 3 679 05 00872

COPYRIGHT AND CONFIDENTIAL
THE INFORMATION ON THIS DOCUMENT IS THE PROPERTY OF BHARAT HEAVY ELECTRICALS LTD. IT MUST NOT BE USED DIRECTLY OR INDIRECTLY IN ANY WAY DETRIMENTAL TO THE INTEREST OF THE COMPANY.

REF. DRG. No.

SIGN. & DATE

INVENTORY No.

BUILDING A1= 992 MODULES

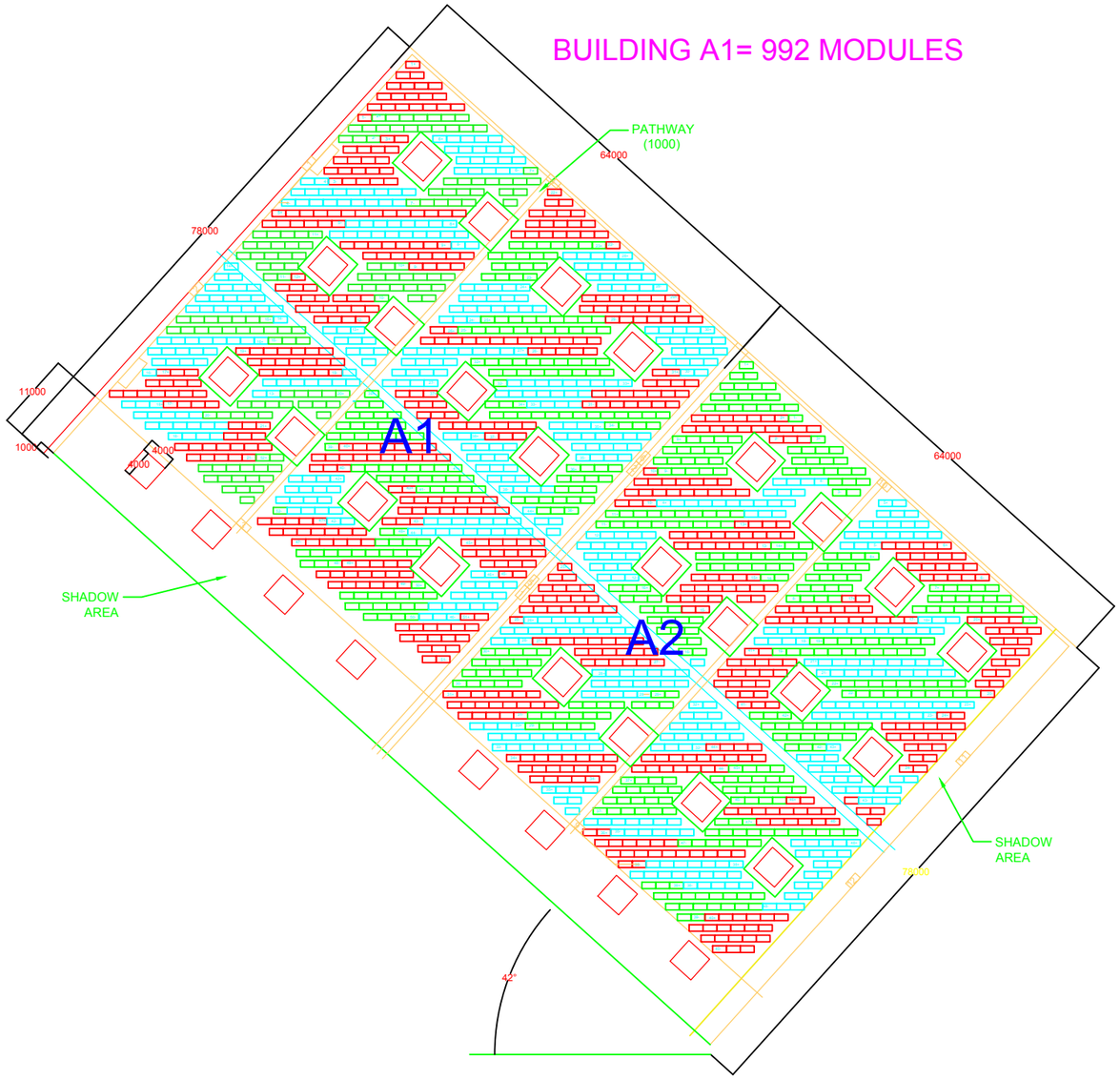

BUILDING A2= 960 MODULES

BUILDING 1&2

BUILDING A3= 1080 MODULES

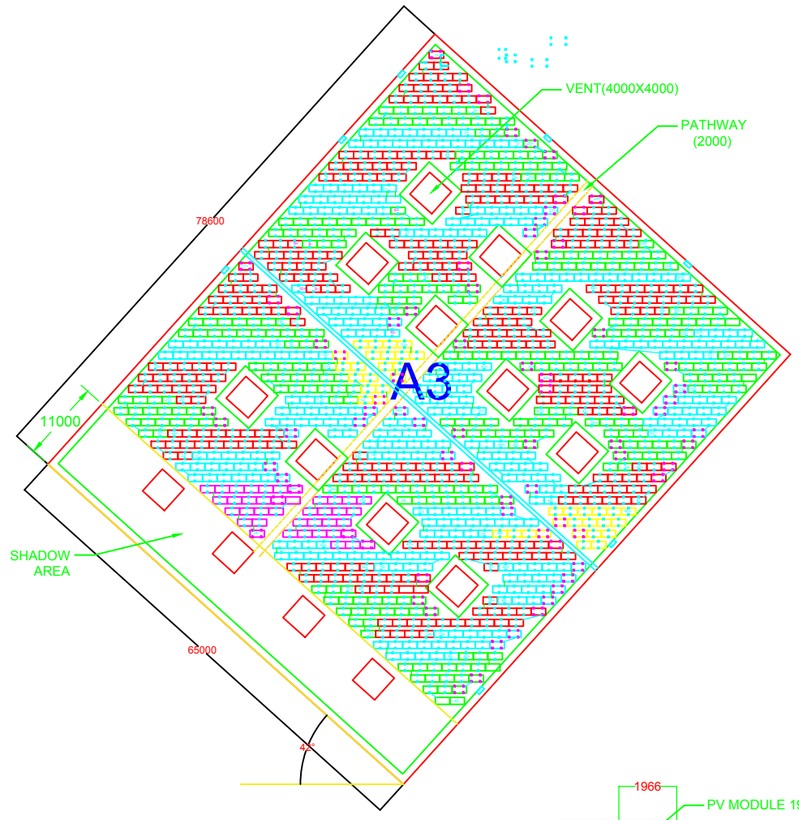

BUILDING 3

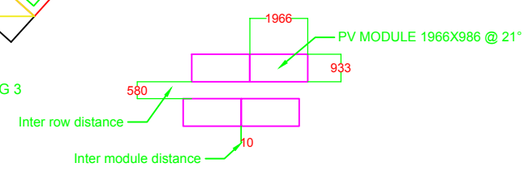

Typical module arrangement

KATARGAM WATER WORKS (940 kWp)

PROJECT : 3.6 MW SOLAR POWER PLANT.
CUSTOMER : SMC SURAT,GUJARAT.

REV.	DATE		REV.	DATE	
01	20/02/17	ALTERED			ALTERED
		CHECKED			CHECKED
		APPROVED			APPROVED
		ARRAY LAYOUT REVISED			

	NAME	SIGN	DATE
DRAWN	NY		20/02/17
CHECKED	PM		20/02/17
APPROVED	MS		20/02/17

DISTRIBUTION OF PRINTS

DEPT.	CODE
SC&PV	439

BHARAT HEAVY ELECTRICALS LIMITED.
ELECTRONICS DIVISION, BANGALORE

TITLE: KATARGAM WATERWORKS 940 KWp TENTATIVE ARRAY LAYOUT.

No. OF SHEETS	10
SHEET No.	01
REV	01

SMC DRG NO.

BHEL DRG. No. 3-679-05-00872

COPYRIGHT AND CONFIDENTIAL
THE INFORMATION ON THIS DOCUMENT IS THE PROPERTY OF BHARAT HEAVY ELECTRICALS LTD. IT MUST NOT BE USED DIRECTLY OR INDIRECTLY IN ANY WAY DETRIMENTAL TO THE INTEREST OF THE COMPANY.

DRG. No. 3 679 05 00871

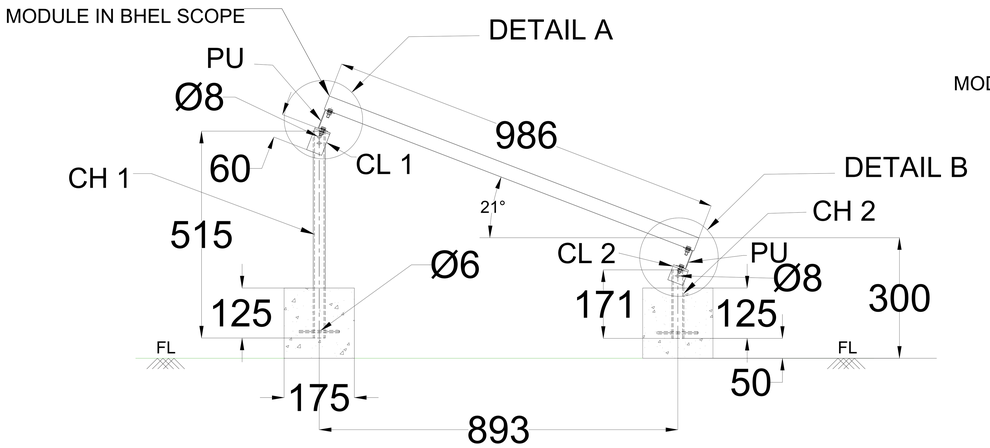

SIDE VIEW

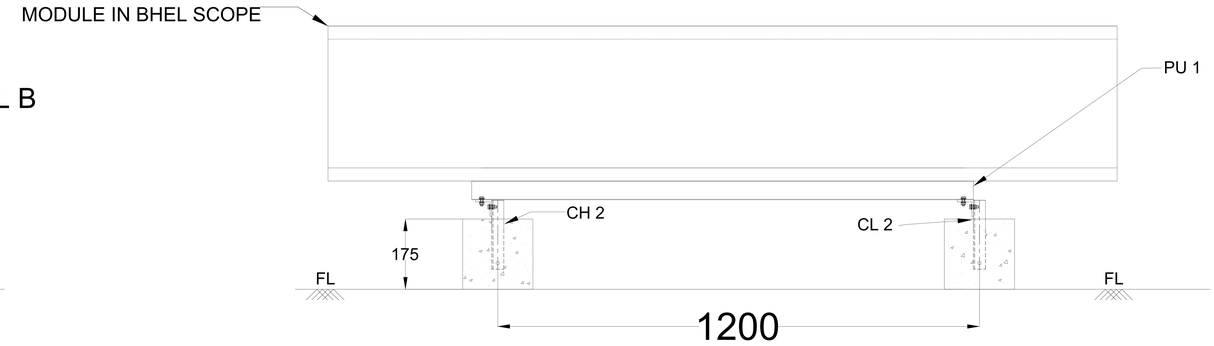

FRONT VIEW

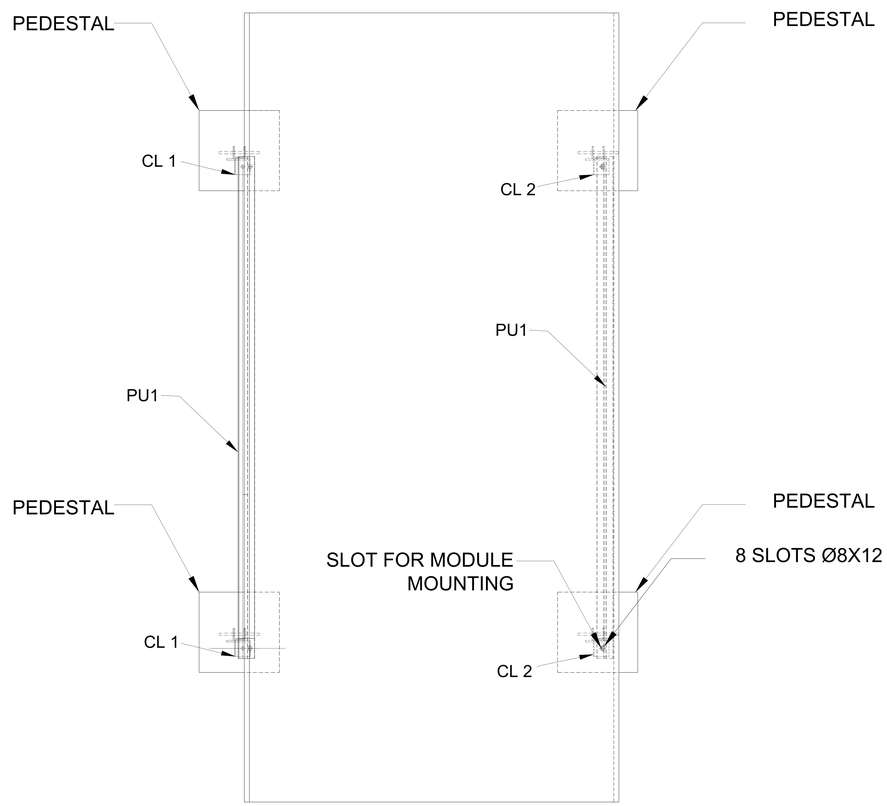

TOP VIEW

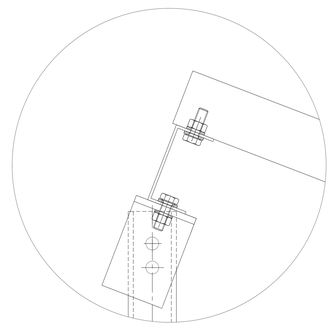

DETAIL A

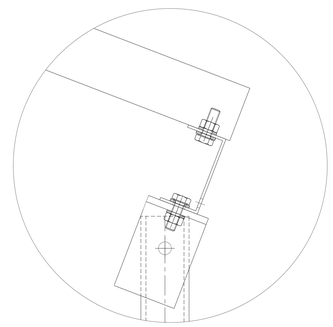

DETAIL B

PROJECT : 3.6 MWp ROOF TOP.
CUSTOMER : SURAT MUNICIPAL CORPORATION.

REV.	DATE	ALTERED / CHECKED / APPROVED	REV.	DATE	ALTERED / CHECKED / APPROVED

	NAME	SIGN	DATE
DRAWN	NY		8/02/17
CHECKED	PM		8/02/17
APPROVED	MS		8/02/17

DISTRIBUTION OF PRINTS

DEPT.	CODE
SC&PV	439

BHARAT HEAVY ELECTRICALS LIMITED.
ELECTRONICS DIVISION, BANGALORE

TITLE: GA OF 1 MODULE STRUCTURE

No. OF SHEETS	01
SHEET No.	01
REV	00

SMC DRG NO. BHEL-SMC-DD-MMS-010

BHEL DRG. No. 3 679 05 00871

REF. DRG. No.
SIGN. & DATE
INVENTORY No.

COPYRIGHT AND CONFIDENTIAL
THE INFORMATION ON THIS DOCUMENT IS THE PROPERTY OF BHARAT HEAVY ELECTRICALS LTD. IT MUST NOT BE USED DIRECTLY OR INDIRECTLY IN ANY WAY DETRIMENTAL TO THE INTEREST OF THE COMPANY.

DRG. No. 3 679 05 00872

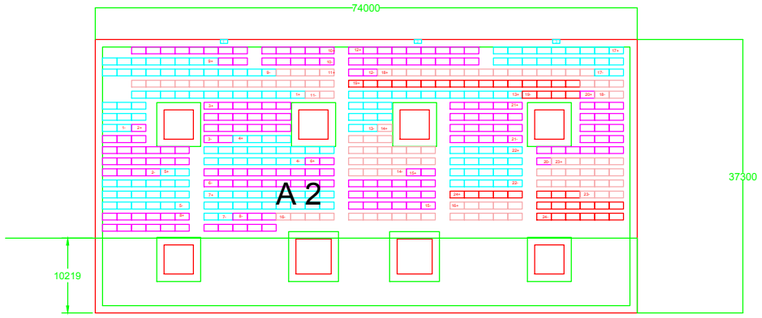

Building A2 = 480 Modules

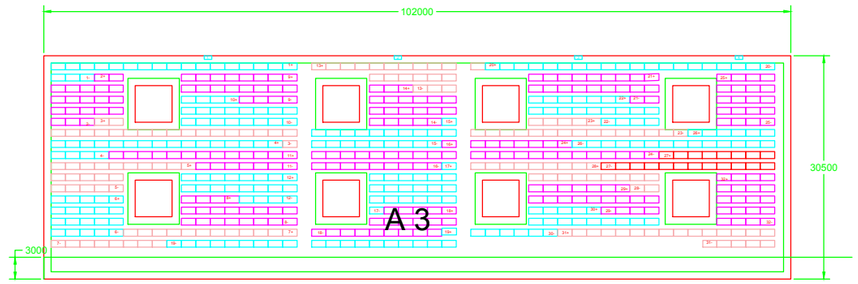

Building A3 = 640 Modules

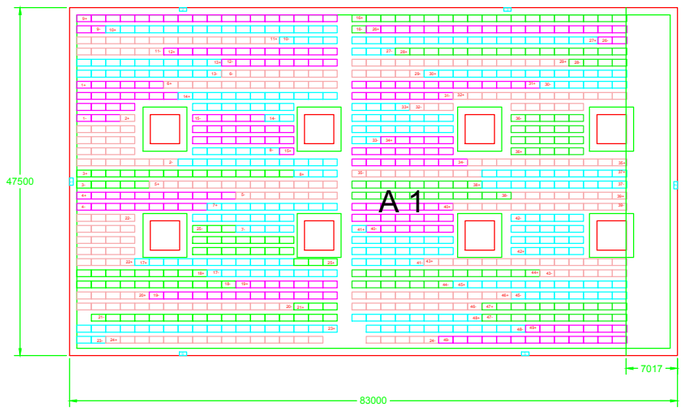

Building A1 = 980 Modules

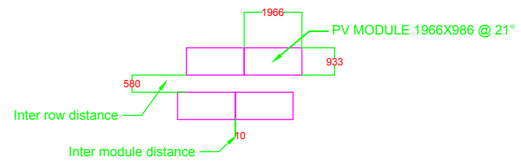

Typical module arrangement

KATARGAM WATER DISTRIBUTION STATION (WDS) (650 kwp)

PROJECT : 3.6 MW SOLAR POWER PLANT.
CUSTOMER : SMC SURAT,GUJARAT.

REV.	DATE	ALTERED / CHECKED / APPROVED	REV.	DATE	ALTERED / CHECKED / APPROVED

	NAME	SIGN	DATE
DRAWN	NY		20/02/17
CHECKED	PM		20/02/17
APPROVED	MS		20/02/17

DISTRIBUTION OF PRINTS

DEPT.	CODE
SC&PV	439

BHARAT HEAVY ELECTRICALS LIMITED.
ELECTRONICS DIVISION, BANGALORE

TITLE: KATARGAM (WDS) (650 KWp) TENTATIVE ARRAY LAYOUT.

No. OF SHEETS	10
SHEET No.	02
REV	00

SMC DRG NO.

BHEL DRG. No. 3–679–05–00872

REF. DRG. No.
SIGN. & DATE
INVENTORY No.

COPYRIGHT AND CONFIDENTIAL
THE INFORMATION ON THIS DOCUMENT IS THE PROPERTY OF BHARAT HEAVY ELECTRICALS LTD. IT MUST NOT BE USED DIRECTLY OR INDIRECTLY IN ANY WAY DETRIMENTAL TO THE INTEREST OF THE COMPANY.

DRG. No. 3 679 05 00871

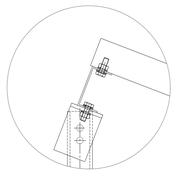

DETAIL A

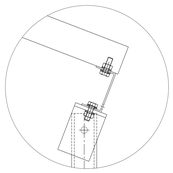

DETAIL B

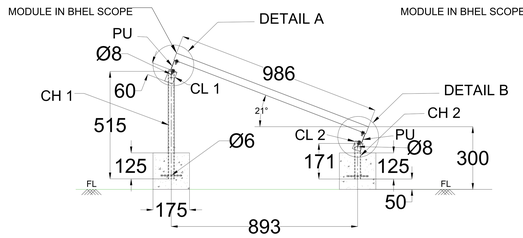

SIDE VIEW

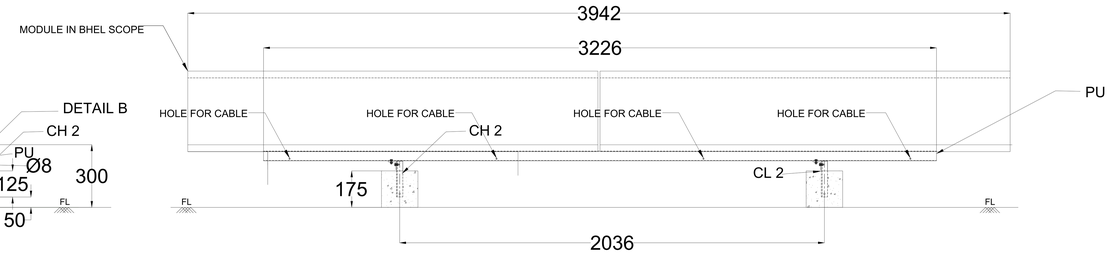

FRONT VIEW

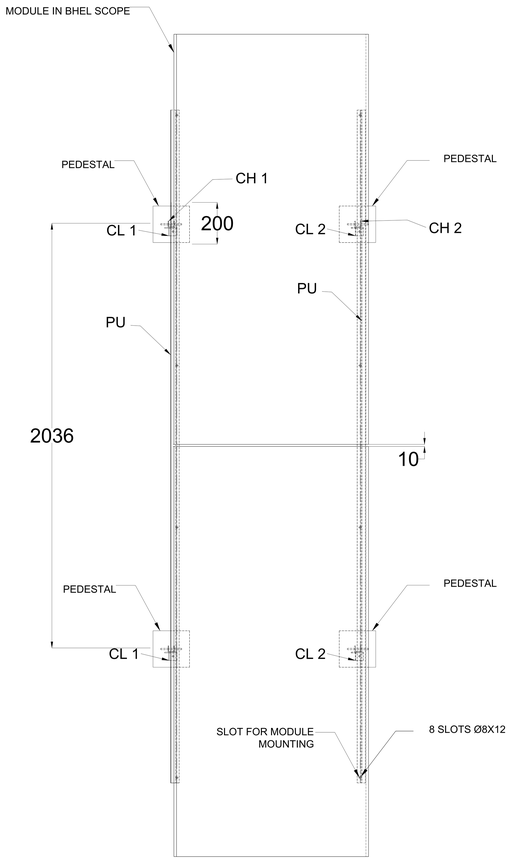

TOP VIEW

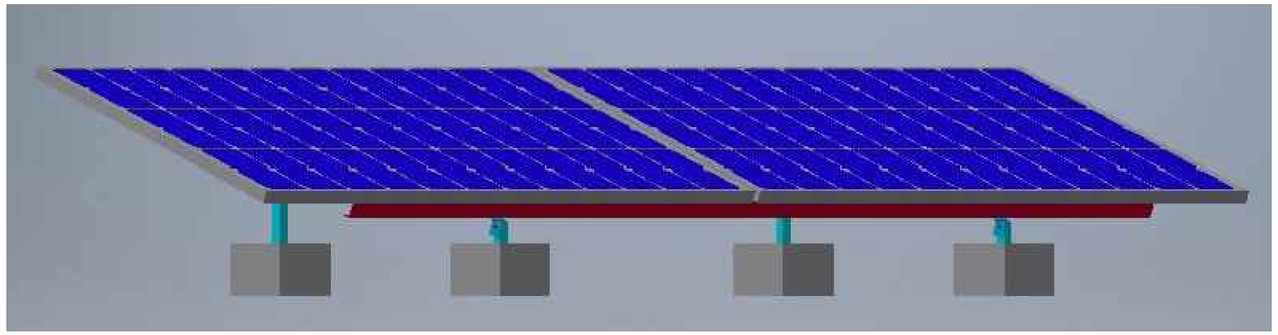

ISOMETRIC VIEW

PROJECT : 3.6 MWp ROOF TOP.
CUSTOMER : SURAT MUNICIPAL CORPORATION.

REV.	DATE	ALTERED / CHECKED / APPROVED	REV.	DATE	ALTERED / CHECKED / APPROVED

	NAME	SIGN	DATE
DRAWN	NY		17/02/17
CHECKED	PM		17/02/17
APPROVED	MS		17/02/17

DISTRIBUTION OF PRINTS

DEPT.	CODE
SC&PV	439

BHARAT HEAVY ELECTRICALS LIMITED.
ELECTRONICS DIVISION, BANGALORE

TITLE: GA OF 2 MODULE STRUCTURE

No. OF SHEETS	01
SHEET No.	01
REV	00

SMC DRG NO. BHEL-SMC-DD-MMS-010

BHEL DRG. No. 3 679 05 00871

REF. DRG. No.

SIGN. & DATE

INVENTORY No.

Katargam Water works

A3
Google

Katargam Jal
Vitran Kendra
Siya Fashion
A2
A3
A1
Google

COPY RIGHT AND CONFIDENTIAL
The information on this document is the property of Bharat Heavy Electrical Limited.
ust not be used diretly or indirectly in anyway detrimental to the interest of the company.

TECHNICAL SPECIFICATION FOR PV MODULE L24270P (24 V, 300 WATTS)

1. PV MODULE TYPE NO. : L24270P

2. CONFIGURATION :SINGLE GLASS LAMINATED TYPE WITH WITH 72 NOS. OF 156-mm MULTI CRYSTALLINE SILICON SOLAR CELLS (12*6) IN SERIES CONFIGURATION.

3. OVERALL SIZE : 1966 (±3) * 986 (±2) * 35 (±1) mm

4. WEIGHT : 25 Kg. (Typ.)

5. PV MODULE FRAME MATERIAL : ANODISED ALUMINIUM

6. JUNCTION BOX : IP65 GRADE JUNCTION BOX WITH CABLES AND CONNECTORS

7. RFID Tag : As per JNNSM Guidelines

8. TYPICAL ELECTRICAL CHARACTERISTICS :

8.1 OPEN CIRCUIT VOLTAGE (Voc) : 45.0 V
8.2 SHORT CIRCUIT CURRENT (Isc) : 8.7 A
8.3 VOLTAGE AT PEAK POWER POINT (Vmp) : 36 V
8.4 CURRENT AT PEAK POWER POINT (Imp) : 8.34 A
8.5 PEAK POWER OUTPUT (Pmax.) : 300 W (±5%)
8.6 CELL EFFICIENCY : 17.1 %
8.7 MODULE EFFICIENCY : 15.5 %
8.8 FILL FACTOR : ≥ 0.70

NOTE :

1. Electrical specifications mentioned above are at Standard Test Conditions of 100 mW/sq. cm solar insolation (AM 1.5) and at 25 deg C temperature.
2. Measurement repeatability of peak power output: ± 3 %

REFER MODULE DRAWING NO. : 3-679-02-00395

FIRST ANGLE PROJECTION

ALL DIMENSIONS ARE IN mm

DRAWING NO. 3 679 02 00395

COPYRIGHT AND CONFIDENTIAL
The information on this document is the property of Bharat Heavy Electricals Limited.
It must not be used directly or indirectly in anyway detrimental to the interest of the Company

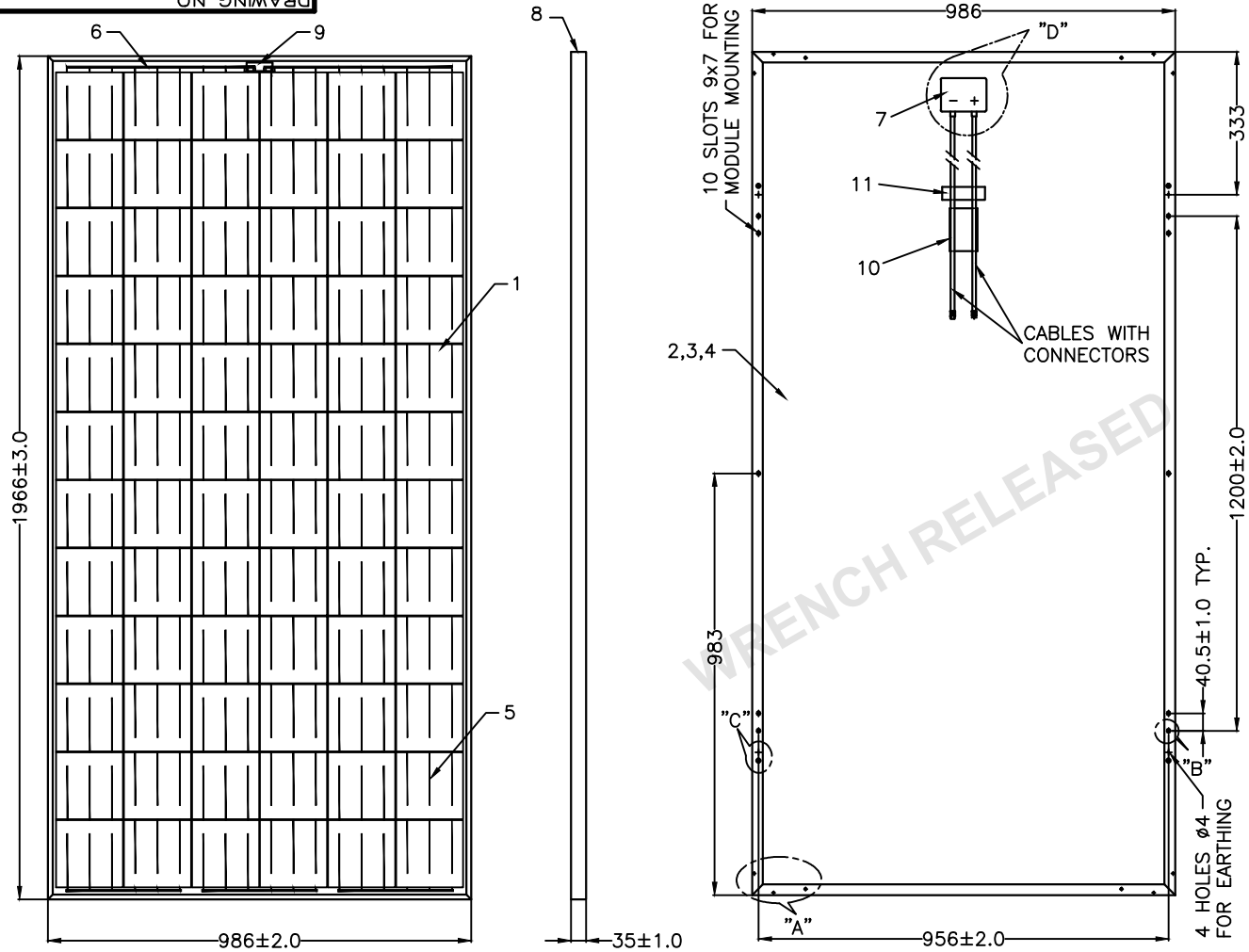

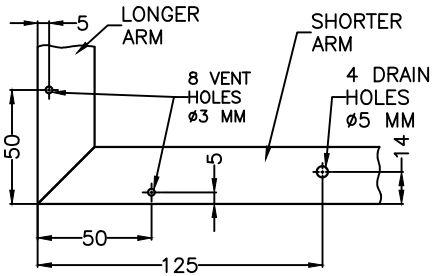

DETAL – "A"

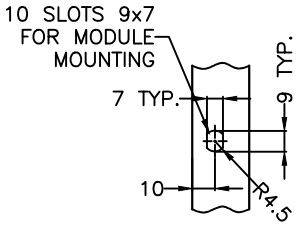

DETAIL – "B"

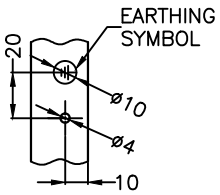

DETAIL – "C"

PART	DESCRIPTION
11	RFID TAG
10	MODULE RATING STICKER
9	PV MODULE SL. NO. STICKER
8	ANODISED ALUMINIUM EDGE FRAME
7	JUNCTION BOX WITH CABLES & CONNECTORS
6	BUS BAR
5	INTERCONNECTS
4	BACK SHEET
3	EVA SHEET
2	HIGH TRANSMISSION TEMPERED GLASS
1	72 Nos. OF 156 mm MULTI CRYSTALLINE SILICON SOLAR CELLS CONNECTED IN SERIES

WRENCH RELEASED

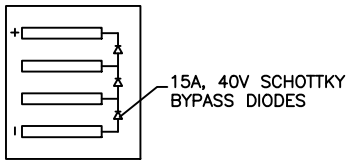

DETAIL "D"

TYPE OF PRODUCT OR NAME OF CUSTOMER/PROJECT

BHARAT HEAVY ELECTRICALS LIMITED.
ELECTRONICS DIVISION, BANGALORE

	NAME	SIGN.	DATE	No. OF VAR
DRN	SAN		130315	
CKD	SM		130315	
APPD	SR	Sd/–	130315	

REV.	DATE	ALTERED / CHECKED / APPROVED

REV.	DATE	ALTERED / CHECKED / APPROVED

REV.	DATE	ALTERED / CHECKED / APPROVED
00		FIRST ISSUE

DEPT.	FOR UNSPECIFIED TOLERANCES REFER ED 0230499	SCALE	WEIGHT(Kg)	REF. TO ASSY. DRG.	ITEM NO.	No. OF ITEM
SC&PV		1 : 10				
CODE 439						

TITLE
PHOTOVOLTAIC MODULE–L24270P
156mm Multi Solar Cell (Corner Block Type)

DRAWING NO. 3 679 02 00395 REV. 00

SHEET NO. 01 NO. OF SHEETS 01

REF. DRG.NO. | SIGN & DATE | INVENTORY NO.

FORM No. A3–02

A3 SIZE

COPYRIGHT AND CONFIDENTIAL
THE INFORMATION ON THIS DOCUMENT IS THE PROPERTY OF BHARAT HEAVY ELECTRICALS LTD. IT MUST NOT BE USED DIRECTLY OR INDIRECTLY IN ANY WAY DETRIMENTAL TO THE INTEREST OF THE COMPANY.

DRG. No. 3 679 05 00871

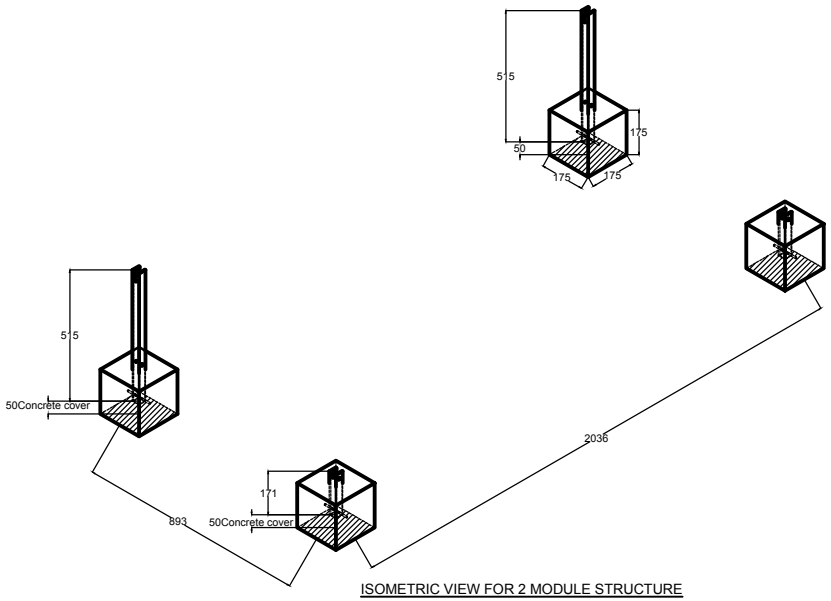

ISOMETRIC VIEW FOR 2 MODULE STRUCTURE

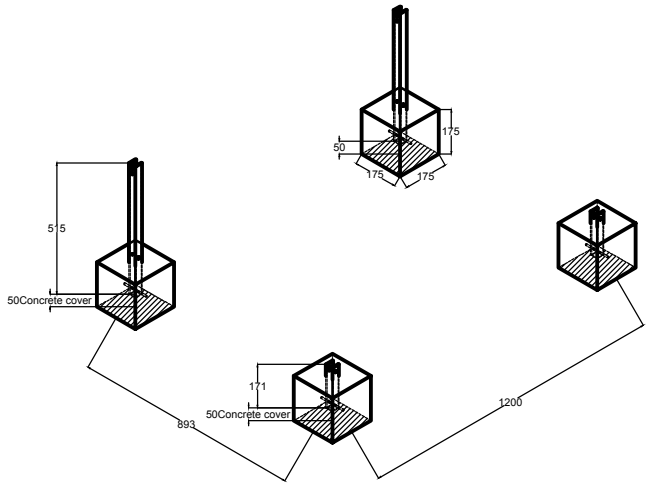

ISOMETRIC VIEW FOR 1 MODULE STRUCTURE

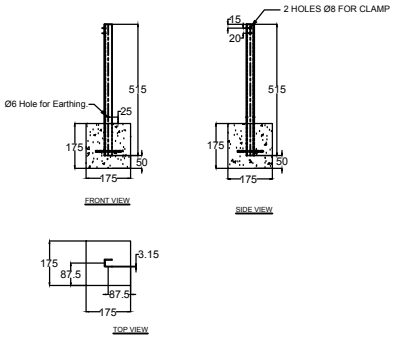

PEDESTAL FOR BIGGER CHANNEL

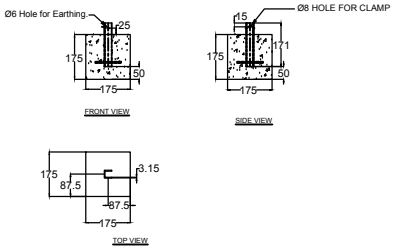

PEDESTAL FOR SMALLER CHANNEL

Nito bond to be applied as shown in hatched area

Note:

1. Provision is given for earthing holes on columns at a distance of 25 mm from the top of pedestal.These holes can be used for holding columns for making the template for pedestal.
2. All dimensions are in mm.
3. Do not scale the drawing only written dimensions to be read.

PROJECT : ROOF TOP SURAT
CUSTOMER : SURAT MUNICIPAL CORPORATION

REV.	DATE	ALTERED / CHECKED / APPROVED	REV.	DATE	ALTERED / CHECKED / APPROVED

	NAME	SIGN	DATE
DRAWN	NY		17/02/17
CHECKED	PM		17/02/17
APPROVED	MS		17/02/17

DISTRIBUTION OF PRINTS

DEPT.	CODE
SC&PV	439

BHARAT HEAVY ELECTRICALS LIMITED.
ELECTRONICS DIVISION, BANGALORE

TITLE: ISOMETRIC VIEW OF PEDESTAL

No. OF SHEETS	01
SHEET No.	01
REV	00

SMC DRG NO. BHEL-SMC-DD-MMS-010

BHEL DRG. No. 3 679 05 00871

REF. DRG. No.
SIGN. & DATE
INVENTORY No.

Typical Procedure for In-Situ Casting of Pedestals.

1. Marking of Pedestals as per the Array layout footing.
2. The area marked for the base of the pedestal has to be roughed and then cleaned properly with a brush.
3. Nito bond has to be prepared as per data sheet.
4. Nito bond to be applied on the base of pedestal and then the template for pedestal to be placed on the base and the Channel to be placed as shown in the MMS drawing.
5. The template has to prepared by the vendor in sufficient nos and template to ensure proper position of channel in it.
6. PCC foundation blocks are to be made with 1:2:4 cement concrete.
7. After the template is in position and nito bond applied, 1:2:4 concrete to be poured in it and allowed to dry as per IS 456.
8. Physical inspection of mixing of concrete.
9. The concrete can be made with hand mixing or machine mixing, to be done at site itself.
   The above procedure has to be applied.

   Vendor to submit the following documents for Approval to BHEL:
   1. Revised procedure for In-situ Casting of pedestals.
   2. Template drawing to be used for In –situ Casting.

   Annexures:
   1. Nito bond data sheet.
   2. Array layout.
   3. GA Drawing of Pedestals.

   Note:
   Standard procedures along with relevant IS Codes to be followed for the above procedure.

FIRST ANGLE PROJECTION

DRAWING NO. 3-SK-SLD-BHEL-SMC

ALL DIMENSIONS ARE IN mm

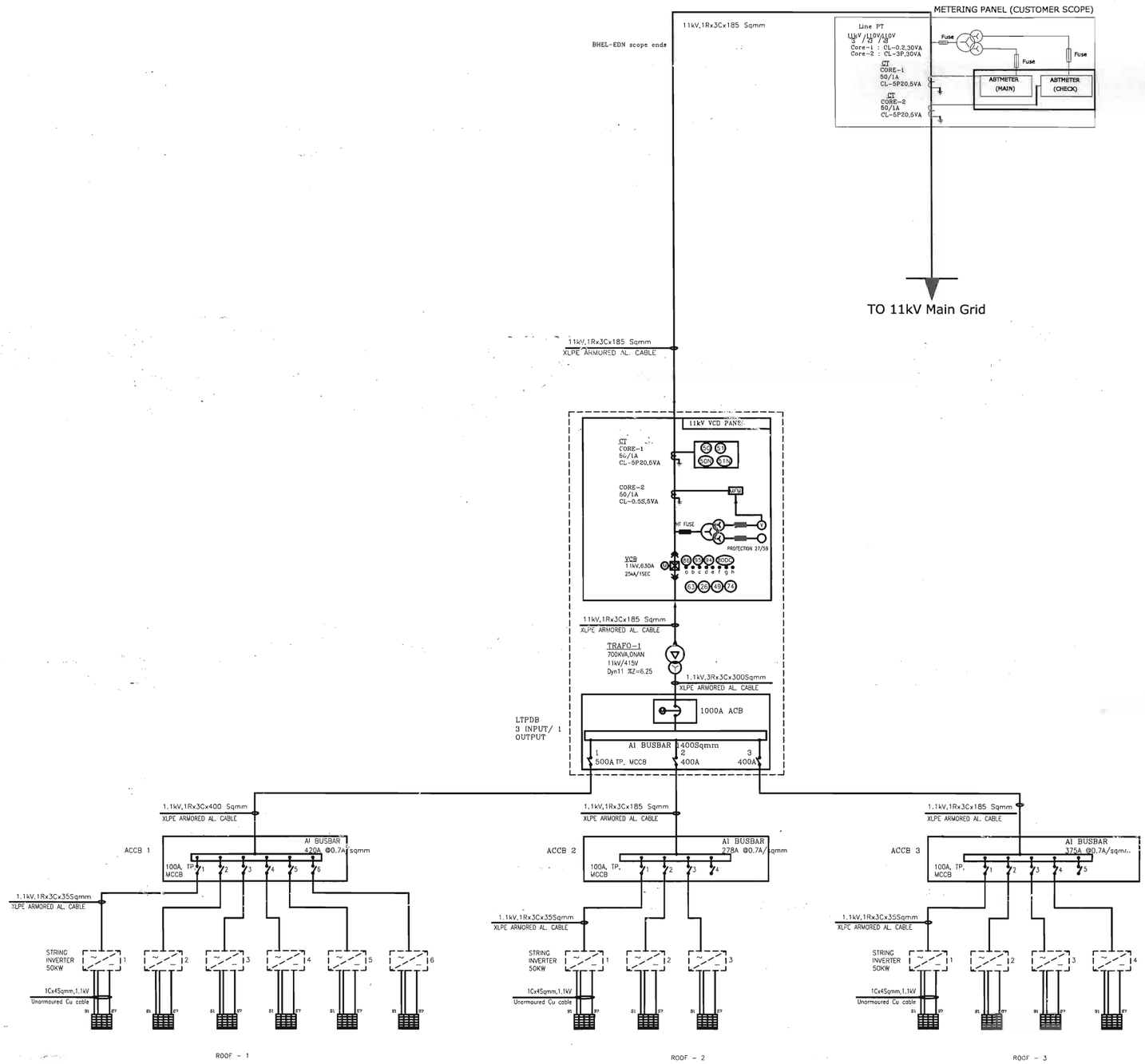

LEGEND DETAILS

SL. NO.	SYMBOL	DESCRIPTION
1		POWER TRANSFORMER
2		VCB 11kV,630A 26.3kA/1Sec
3	86	MASTER TRIP RELAY
4	95	TRIP CIRCUIT SUPERVISION RELAY
5	94	ANTI PUMPING RELAY
6	63	BUCHHOLZ RELAY
7	60DC	DC FAILURE RELAY
8	26	MAGNETIC OIL LEVEL GAUGE
9	49	WINDING TEMP INDICATOR AND OIL TEMP INDICATOR
10	74	PRESSURE RELIEF DEVICE
11	a	VCB ON
12	b	VCB OFF
13	c	SPRING CHARGE
14	d	AUTO TRIP
15	e	TRIP CIRCUIT HEALTHY
16	f	SERVICE POSITION
17	g	TEST POSITION
18	h	DC FAILURE
19	50	INST OVER CURRENT RELAY
20	51	IDMT OVER CURRENT RELAY
21	50N	NEUTRAL INSTANTANEOUS OVER CURRENT RELAY
22	51N	IDMT EARTH FAULT RELAY
23	MFM	MULTI FUNCTION METER
24		CURRENT TRANSFORMER
25		POTENTIAL TRANSFORMER
26		FUSE
27		STRING INVERTER
28		1000A ACB, TP,50kA ELECTRICALLY DRAW OUT ACB

PROJECT : 650KW ROOF TOP SOLAR POWER PLANT
CUSTOMER : SURAT MUNICIPAL CORPORATION

BHARAT HEAVY ELECTRICALS LIMITED.
ELECTRONICS DIVISION, BANGALORE

SINGLE LINE DIAGRAM
KATARGAM WATER DISTRIBUTION SYSTEM

3-SK-SLD-BHEL SMC

DRAWN	SAN		01/02/17
CHECKED	RA		01/02/17
APPROVED	GJM		01/02/17

No. OF SHEETS 01
SHEET 01
REV 00

REV. 00 — DATE — ALTERED — CHECKED — APPROVED — FIRST ISSUE

COPYRIGHT AND CONFIDENTIAL
The information on this document is the property of Bharat Heavy Electricals Limited.
It must not be used directly or indirectly to the injury of the Company

INVENTORY NO. | REF. DRAWING | SIGN & DATE

AD SIZE

FIRST ANGLE PROJECTION

DRAWING NO. 3-SK-SLD-BHEL-SMC

CONFIDENTIALITY AND CONFIDENTIAL
The information on this document is the property of Bharat Heavy Electricals Limited.
It must not be used directly or indirectly in any way detrimental to the interest of the Company

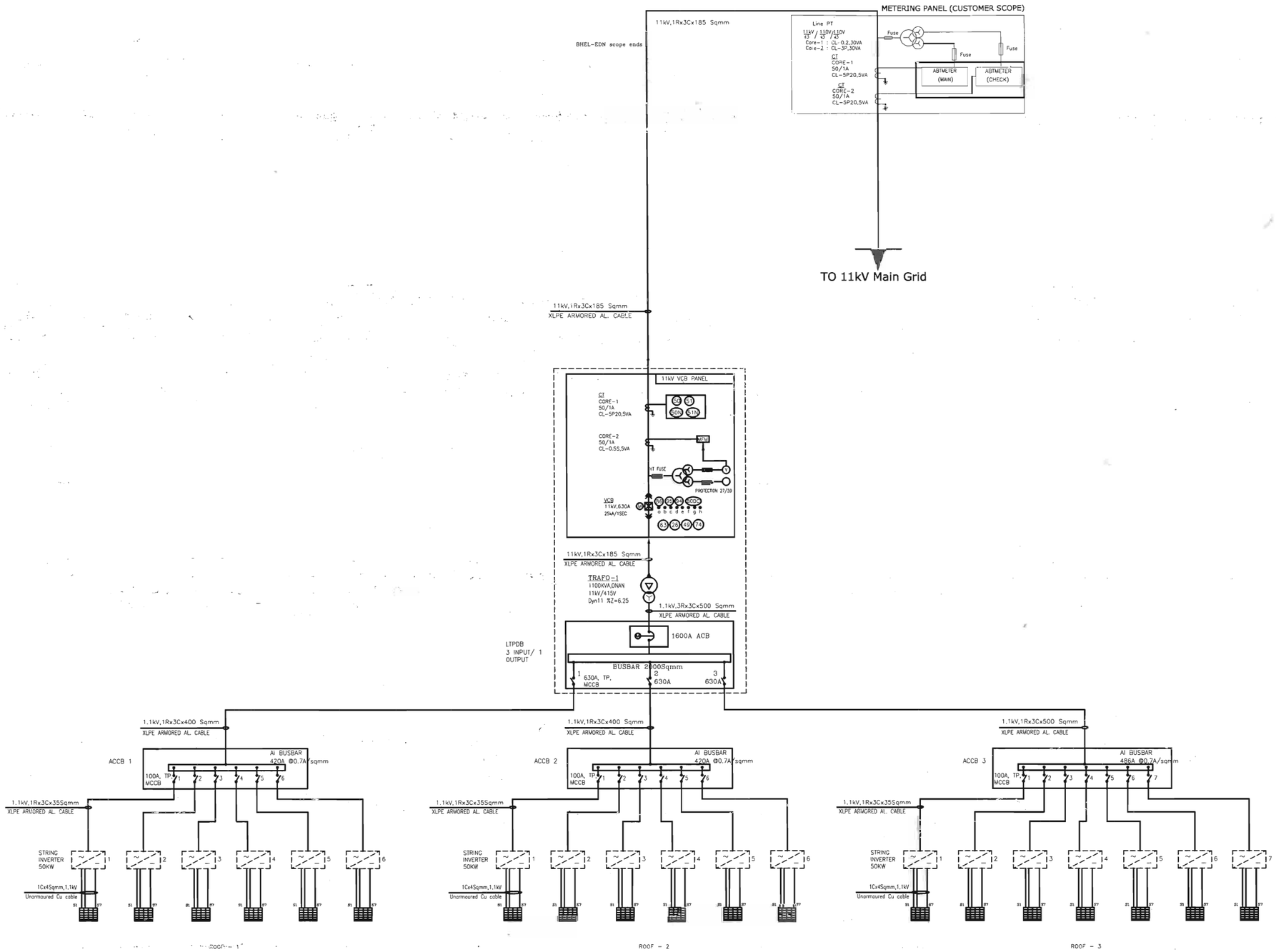

LEGEND DETAILS

SL. NO.	SYMBOL	DESCRIPTION
1		POWER TRANSFORMER
2		VCB 11kV,630A 26.3kA/1SEC
3	86	MASTER TRIP RELAY
4	95	TRIP CIRCUIT SUPERVISION RELAY
5	94	ANTI PUMPING RELAY
6	63	BUCHHOLZ RELAY
7	60DC	DC FAILURE RELAY
8	26	MAGNETIC OIL LEVEL GAUGE
9	49	WINDING TEMP INDICATOR AND OIL TEMP INDICATOR
10	74	PRESSURE RELIEF DEVICE
11	a	VCB ON
12	b	VCB OFF
13	c	SPRING CHARGE
14	d	AUTO TRIP
15	e	TRIP CIRCUIT HEALTHY
16	f	SERVICE POSITION
17	g	TEST POSITION
18	h	DC FAILURE
19	50	INST OVER CURRENT RELAY
20	51	IDMT OVER CURRENT RELAY
21	50N	NEUTRAL INSTANTANEOUS OVER CURRENT RELAY
22	51N	IDMT EARTH FAULT RELAY
23	MFM	MULTI FUNCTION METER
24		CURRENT TRANSFORMER
25		POTENTIAL TRANSFORMER
26		FUSE
27		STRING INVERTER
28		1600A ACB, TP,50kA ELECTRICALLY DRAW OUT ACB

PROJECT : 940KW ROOF TOP SOLAR POWER PLANT
CUSTOMER : SURAT MUNICIPAL CORPORATION

BHARAT HEAVY ELECTRICALS LIMITED.
ELECTRONICS DIVISION, BANGALORE

SINGLE LINE DIAGRAM
KATARGAM WATER WORKS

3-SK-SLD-BHEL SMC

REV.	DATE	ALTERED / CHECKED / APPROVED
00		FIRST ISSUE

DRAWN: SAN
CHECKED: RA
APPROVED: G.M.M

No. OF SHEETS: 01
SHEET: 01
REV: 00

A0 SIZE

COPYRIGHT AND CONFIDENTIAL
THE INFORMATION ON THIS DOCUMENT IS THE PROPERTY OF BHARAT HEAVY ELECTRICALS LTD. IT MUST NOT BE USED DIRECTLY OR INDIRECTLY IN ANY WAY DETRIMENTAL TO THE INTEREST OF THE COMPANY.

DRG. No. 3-679-05-00XXX

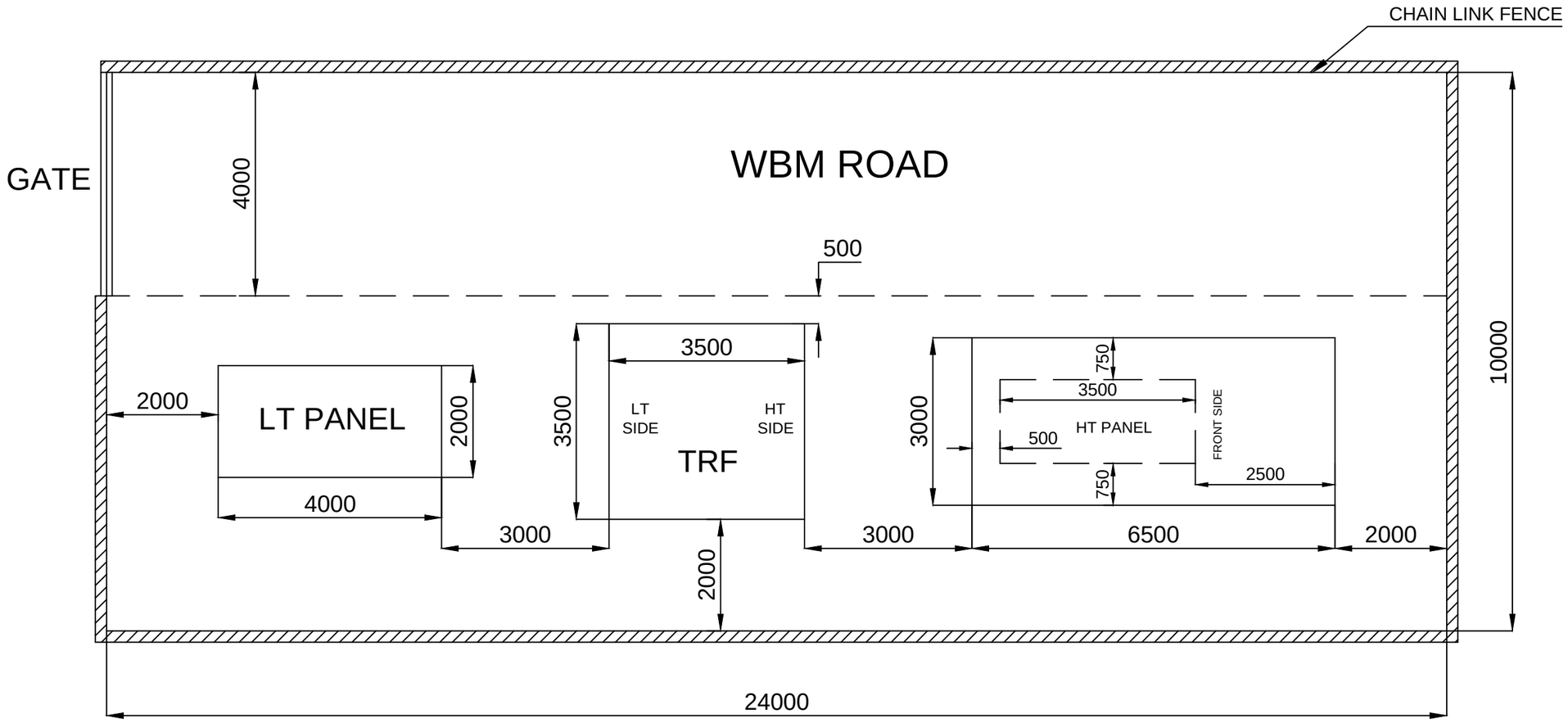

- Trenches not indicated.
- All dimensions are in mm.
- Total Area = 240 sqm.

REV.	DATE	ALTERED / CHECKED / APPROVED	REV.	DATE	ALTERED / CHECKED / APPROVED
					FIRST ISSUE

	NAME	SIGN	DATE	DEPT.	CODE
DRAWN	DR		FEB'17		
CHECKED	RA		FEB'17		
APPROVED	GLN		FEB'17	SC&PV	439

BHARAT HEAVY ELECTRICALS LIMITED
ELECTRONICS DIVISION, BANGALORE

CARD CODE

PROJECT: SMC 3.6MW ROOFTOP SPV PLANT — No. OF SHTS: 01

TITLE: TENTATIVE SWITCH YARD LAYOUT — SHT No. 01

M.O. No. — DRG. No. 3-679-05-00XXX — REV 00

REF. DRG. No.

SIGN. & DATE

INVENTORY No.

At page no 5 & 6 of Specification number PS:439:1121 (f) Insurance & (g) Warranty terms shall be read as:

(F) Insurance :

1) BOS vendor shall be required to affect Transit Insurance to the supplies under their scope, under an Insurance policy covering third party liability also valid for entire duration of contract up to date of handing over of facilities (Plant) to SMC.
2) The transit Insurance shall cover transit of BOS Supplied goods from BOS works / BOS sub-vendor works to storage location in Surat and further to various building sites in Surat city.
3) Transit insurance for BHEL supplied goods for the project up to Storage location in Surat and further up to various buildings is in scope of BHEL.
4) A comprehensive Storage cum Erection Cum Commissioning policy shall be taken by BHEL for insurance for entire project supplies and is not included in BOS Vendor scope.
5) Insurance charges, renewal premiums shall be borne by BOS vendor. It is responsibility of BOS vendor to maintain the Insurance policy in force for the entire duration of contract. In case of any loss / claim under the policy, the contractor shall immediately inform the same to BHEL and SMC and lodge the necessary claim and take all measures required for settlement of claim and protect the interest of BHEL, SMC. In case of any delay / lapse on the part of BOS vendor, the loss shall be made up by them by replacing the equipment under claim without waiting for Insurance settlement.

(G) Warranty :

The successful bidder shall provide a warranty covering the rectification of all defects in the design of equipment, material and workmanship of manufacturing of equipment for a period of 12 (Twelve) months after satisfactory commissioning. The “commissioning date” for purpose of Start of Warranty will be the date of commissioning of the last item under BOS Vendor scope.