1. **Inviting Tenders**

Bid submission in two part, Part-I: Techno-commercial bid and Part-II: Price bid are hereby invited for entering into Rate Contract for **manufacture and supply of radiographic quality castings of valve (upto C500) & wall blower components as per BHEL drawings of various material grades (ASTM A 216 Gr. WCB/WCC; A 217 Gr. WC6/WC9; A 351 Gr. CF8/CF8M)** as per relevant TDC/Matl Standards/Drgs and bill of materials mentioned. The bidder shall submit his response through bid submission to the tender on e-Procurement platform at **https://bhel.abcprocure.com**. **Offers in any other mode will not be accepted.**

a) The bidder would be required to register on the e-procurement market place **https://bhel.abcprocure.com** and submit their bids online. **Sealed cover bids / e-Mails / FAX / Manual offer will NOT be accepted.**
b) The bidder has to keep track of any changes by viewing the addendum / Corrigendum's issued by the Purchaser on time-to- time basis in the E-Procurement platform. The Company calling for tenders shall not be responsible for any claims/problems arising out of this.
c) The user should complete all the processes and steps required for bid submission. The successful bid submission can be ascertained once acknowledgement is given by the system through bid submission number after completing all the processes and steps. BHEL and M/s e Procurement Technologies limited will not be responsible for incomplete bid submission by users. Users may also note that the incomplete bids will not be saved by the system and are not available for the Purchaser for processing.
d) Before uploading scanned documents if any, the bidders shall sign on all the statements, documents, certificates uploaded by him, owning responsibility for their correctness / authenticity.

| Bid | | Documents required |
|---|---|---|
| Part-I | Techno-Commercial Quotation in response to tender enquiry no. 1920-118E dt 17.01.2020 | As per check list |
| Part-II | Price Quotation in response to tender enquiry no. 1920-118E dt 17.01.2020 | Price bid |

Quotations shall reach us by 1400 Hrs (IST) on due date. **Kindly ensure that signed copy of Integrity Pact is attached in Part-I**. **Techno-Commercial bid shall be opened at 1530 hrs (IST) on due date.**
**For finalizing prices, BHEL may go in for opening of sealed price bids (Part-II) or conduct reverse auction.**

Price bids/Reverse Auction of only those bidders shall be opened/conducted who qualifies in techno-commercial (Part-I) evaluation. Qualification in Part-I shall be adjudged by criteria mentioned in checklist. Date shall be informed.

**Please submit all the documents/confirmations as per checklist. This will facilitate quick evaluation and early finalization of tender.**

In case overseas suppliers route their offer through their accredited selling agents, a letter of authority should be furnished mentioning the name and address of their selling agents who are authorised to bid, negotiate and conclude a Contract on their behalf. This letter should be sent before the tender submission otherwise bid will be considered as unsolicited bid.

**Pre-Qualification terms for participating in the Rate Contract:**

1. **Vendor has to submit customer Purchase Orders and their invoices of Carbon Steel Castings/Alloy Steel Castings /Stainless Steel Castings with minimum cumulative value of Rs. 2,00,00,000 (Rs. Two Crore Only) as proof. Purchase Order/s and their invoices date should be 01.01.2017 or afterwards. For MSEs, the required cumulative value of POs and invoices shall be Rs. 1,00,00,000.00 (Rs. One Crore only). Start-ups shall be exempted from the above criteria of Purchase order and invoice submission without any relaxation in quality standards or technical parameters as per D.O. No. 5(4)/2016-BE-I dated 15.02.2017. For claiming Start-Up exemption, vendors have to submit DPIIT (Dept. of Promotion of Industry and Internal Trade)/DIPP (Department for Industrial Policy and Promotion) recognition certificates.**

2. **Vendor shall have to submit "Well Known Foundry" certificate which shall be valid as on date of tender opening and vendor has to submit undertaking that they shall renew it from time to time if the IBR certificate is valid till 31.03.2021 or before. IBR foundries which have applied for renewal on the date of tender opening shall submit the expired "Well Known Foundry" certificate and documentary evidence/undertaking for renewal of the same. Foreign suppliers shall give the undertaking that they shall follow the process of witness pouring through IBR authorized agencies.**

## G1.2 INSTRUCTION TO BIDDER (In case of E-Procurement)

Interested bidders/Suppliers shall submit their offer through e-Procurement mode at **https://bhel.abcprocure.com**. **Offers in any other mode will not be accepted.**

For Enterprise Procurement System (EPS) Bidders/Suppliers are requested to follow these steps:

**a. Requirements**

1. Computer with good Internet Connection.
2. Operating System should be Windows Vista / Windows 7 and above.
3. Web Browsers: Internet Explorer 9.0 (32-bit Browser only) & above

**b. Mandatory Requirements:**

Suppliers interested for registration for BHEL Open Tenders should have a valid DSC (Digital Signature Certificate) before Proceeding forward for Registration. Herein a Valid DSC refers to a Class-II/III Digital Signature Certificate (DSC) for Signing & Encryption (Required both digital signature certificate: Signing & Encryption) of bids issued by any of the valid Certifying Authorities (approved by Controller of Certifying Authorities) in India. Valid Digital Signature Certificate (DSC) must be installed in a computer system from where you want to access the website.

**For Unregistered Suppliers in EPS:**

Procedure for Online Registration in EPS for Open Tender Suppliers for BHEL. Please follow the below steps for registration: -

1. Click Register Button (Top of the Screen).
2. Please input your organization PAN No (in case of Indian supplier) or select your "country" in case you are an overseas Supplier.
3. Select Units to participate in.
4. Fill up Company details.
4. Key in your desired login id If you have registered by keying in PAN No. then your desired login id will be prefixed by "OTI", In case of **overseas suppliers it will be also prefixed with "OTI"**.

5. Fill in the Captcha code & agree to the terms & conditions and privacy policy of this website and click SUBMIT.

Once the above steps are completed, contact to M/s eProcurement Technologies Limited for ID Activation. M/s e Procurement Technologies limited, Ahmedabad will activate your ID within 2 business hours. After registering, follow the steps provided in "For Registered Supplier" to view RFQ.

NB: - 1 BHEL Administrator or user will have no role for approving Registration and Open Tenders and DSC for any supplier who has registered himself from the front END which is in case of OT.

**For Registered Supplier in EPS:**

1. Supplier visits EPS home page
2. Supplier Login in with their user id and password
3. Search the RFQ ID and views it.
4. Attaches themselves to the RFQ by clicking the "I/We wish to participate".
5. Supplier fills the bid template and makes necessary attachments
6. Supplier submits their bid by clicking Sign, Encryption & Save button.

In any problem is faced by supplier while login/registration in EPS (**https://bhel.abcprocure.com**) and any other assistance, please contact the support team of M/s e Procurement Technologies limited, Ahmedabad as per details mentioned in table below: -

| Name | Contact Nos. | e-mail ID | Role | Location |
|---|---|---|---|---|
| Mukunthan | +91 6353215001 | Trichy.bhel@eptl.in | Support Executive | Trichy |
| Swapnil Hamilton | +91 7940270549 | swapnil.h@eptl.in | Support Executive | HO – Ahmedabad |
| Hardik Oza | +91 7940270560 | Hardik.oza@eptl.in | Support Executive | HO – Ahmedabad |
| Ankur Bhatt | +91 7940270590 | ankur.bhatt@eptl.in | Support Executive | HO – Ahmedabad |
| Prashant Rajyaguru | +91 7940270545 | prashant@eptl.in | Asst. Manager – Implementation & Support | HO – Ahmedabad |
| Dharam Rathod | +91 7940270596 | dharam@eptl.in | Manager – Implementation & Support | HO – Ahmedabad |
| Pradip Parmar | +91 7940270532 | pradip@eptl.in | Sr Mgr – Implementation & Support | HO – Ahmedabad |
| Devang Patel | +91 7940270576 | devang@eptl.in | Sr Manager – Implementation & Support | HO – Ahmedabad |

**G2.2. OTHER IMPORTANT INFORMATION RELATED TO E-PROCUREMENT TENDERS**

1. The bidder has to keep track of any changes by viewing the addendum / Corrigendum's issued by the Purchaser on time-to- time basis in the E-Procurement platform. The

Company calling for tenders shall not be responsible for any claims/problems arising out of this.

2. The user should complete all the processes and steps required for bid submission. The successful bid submission can be ascertained once acknowledgement is given by the system through bid submission number after completing all the processes and steps. BHEL and M/s e Procurement Technologies limited will not be responsible for incomplete bid submission by users. Users may also note that the incomplete bids will not be saved by the system and are not available for the Purchaser for processing.
3. Before uploading scanned documents if any, the bidders shall sign on all the statements, documents, certificates uploaded by him, owning responsibility for their correctness / authenticity.
4. On the due date of tender opening, only technical bids will be opened. The opened technical bids will be evaluated by us and clarifications required, if any, will be called for from the bidders on technical and commercial points. If no reply is received from the vendor for the clarification raised by BHEL with in the final cut-off date, those vendors offer will be processed with the documents available / submitted against this tender. Offers not meeting the required specification and technical condition will be summarily rejected. The price bids of technically suitable bidders will be opened on a later date with prior intimation to techno-commercially suitable bidders.
5. Ranking L-1, L-2 etc. shall be done for individual item for the techno-commercially acceptable offers on landed cost to BHEL, IVP Goindwal basis and BHEL reserves the right to place order for individual items with different vendors. In the event of more than one vendor becoming L1 for the item, the enquiry quantity will be shared equally among all the L1 vendors.
6. BHEL reserves the right to negotiate with L1 vendor or re-float the tender for items where, **L1** price is not the lowest acceptable price; BHEL reserves the right to increase or decrease the tender quantity.
7. **If supplier is mentioning delivery destination within state/ outside state depending upon his location of factory, Free On Road etc these are assumed as on FOR Goindwal. If supplier is wishing to give delivery on Ex works basis, then he has to clearly mention about it.**

## 1.1 AGENCY COMMISSION:

In respect of offers from overseas suppliers, agency commission, if any, payable to their agents in India, shall invariably be shown separately in the proforma invoice and this will be paid by us in India, in Indian Rupees, on satisfactory completion of the Contract.

If overseas Principal has any tie up with any third party in respect of Agency Commission it should be declared while submitting the offers.
Copies of current Agency, / Agreemental Authorization Letter in respect of Agency Commission shall be furnished along with order, if not made available earlier.

**<u>The details of tender items is as per below details:</u>**

| Sl. No. | Group Code | Material Specification | Item Description | Qty. (MT) |
|---|---|---|---|---|
| Upto 500 class items | | | | |
| 1 | G92110080000 | ASTM A 216 Gr. WCB & WCC | Valve Casting & Wall Blower components (Body, Bonnet, Yoke, Wedge and other components of class 150 , 300, 400&500 for size 4" and above Gate (GV), Globe(RV/SV) & NRV(FV) valves | 1200 |
| 2 | G92110100000 | ASTM A 217 Gr. WC9 | Valve Casting & Wall Blower components (Body, Bonnet, Yoke, Wedge and other components of class 150 , 300, 400&500 for size 4" and above Gate (GV), Globe(RV/SV) & NRV(FV) valves | 40 |
| 3 | G92110110000 | ASTM A 351 Gr. CF8 | Valve Casting components (Body, Bonnet, Yoke, Wedge and other components of class 150, 300,400 & 500 for size 2" & 3" Gate (GV), Globe (RV/SV) & NRV(FV) valves; Mounting adapter & Wall Blower castings | 50 |
| 4 | G92110120000 | ASTM A 351 Gr. CF8 | Valve Casting & Wall Blower components (Body, Bonnet, Yoke, Wedge and other components of class 150 , 300, 400&500 for size 4" and above Gate (GV), Globe(RV/SV) & NRV(FV) valves | 50 |
| 5 | G92110130000 | ASTM A 351 Gr. CF8M | Valve Casting components (Body, Bonnet, Yoke, Wedge and other components of class 150, 300,400 & 500 for size 2" & 3" Gate (GV), Globe (RV/SV) & NRV(FV) valves; Mounting adapter & Wall Blower castings | 15 |
| 6 | G92110140000 | ASTM A 351 Gr. CF8M | Valve Casting & Wall Blower components (Body, Bonnet, Yoke, Wedge and other components of class 150 , 300, 400&500 for size 4" and above Gate (GV), Globe(RV/SV) & NRV(FV) valves | 20 |
| Total | | | | 1375 |

The tender quantity given above is tentative only. The actual ordering quantity may vary between grades and also overall tender quantity can vary by any percentage. **Also kindly note that material codes given above are codes which represent a group (e.g material code/group code 'G92110080000' represents all castings of Gr. A216 Gr. WCB/WCC as per Description. These material/group codes are generated for e-tendering purpose only. Actual PO will be released as per material codes given in "list of items". List of items is a probable list. New items in the list of items in the same pressure class can be added from time to time which will also be covered under this RC as per clause 10.**

2. **PRICE BASIS**

**G3. PRICE BASIS**

**a.** The reimbursement of GST portion of invoice shall be released only upon: -

1. vendor declaring such invoice in his GSTR-1and
2. receipt of goods and Tax invoice by BHEL and
3. Confirmation of payment of GST thereon by vendor on GSTN portal.
4. Above is subject to receipt of goods/service and tax invoice thereof along with vendor
   declaring invoice in his return and paying GST within timeline prescribed for availing ITC
   by BHEL.

Since ITC can be availed only when BHEL is in possession of GST Tax invoice and after receipt of goods. Thus, vendor to ensure timely dispatch of goods and Tax invoice. It may be noted that in case of any delay in receipt of Tax Invoice and/or receipt of goods, the ITC availment by BHEL will get delayed thus entailing additional cash outflow & may even get denied if ITC availment timelines are breached.

Further ITC can be availed only when vendor has declared such invoice in his outward supply Return GSTR-1 and after GST thereon has been paid by him at the time of filing of monthly Return.

**b.** In case GST credit is delayed/denied to BHEL due to non/delayed receipt of goods and/or tax invoice or expiry of timeline prescribed in GST law for availing such ITC, or any other reasons not attributable to BHEL, GST amount shall be recoverable from vendor along with interest levied / leviable on BHEL.

**c.** In case vendor delays declaring such invoice in his return and GST credit availed by BHEL is denied or reversed subsequently as per GST law, GST amount paid by BHEL towards such lTC reversal as per GST law shall be recoverable from vendor/contractor alongwith interest levied / leviable on BHEL.

**d.** Any GST liability arising on BHEL under Reverse Charge (RCM) before actual receipt of goods and/ or Invoice thereof would be subject to recovery of Interest leviable for the period between the date of such liability and actual date of eligibility of ITC based on receipt of goods, receipt of Invoices and other conditions specified in GST Law as applicable.

**e.** Order of enquiry item sl. No. shall be maintained in the quotation.

**f.** The rates quoted shall be firm and fixed. No price variation is proposed and allowed except as per PVC clause.

**g.** Rates quoted should be F.O.R Goindwal basis. If bidder has quoted Ex Works, loading shall be done as per BHEL discretion for tender evaluation.

2a. Rates of raw casting components shall be quoted on **rate INR per kg basis & on FOR GOINDWAL SHAIB basis. Foreign supplier has to quote on FOB basis & in USD/INR.**

**2b.** Rates shall be inclusive of pattern and development cost. The patterns cost shall be borne by the supplier.

**2e.** **Comparison shall be made on landed rate per kg to BHEL Goindwal Sahib for deciding L1 offer.** Loading as per BHEL discretion will be done in case of deviation for delivery destination. For comparison purpose & Agent commission conversion rate from USD to INR will be taken for tender opening date. For conversion of fixed RT charges & repair charges into USD, the $ rate at tender opening date will be taken throughout the contract. If the relevant day happens to be a bank holiday, then the forex rate as on the previous bank (SBI) working day shall be taken.

**2f.** Unloading of material at Main Stores of BHEL shall be arranged by BHEL.

**2g.** In case of disputes/errors/difficulty in interpretation of rates mentioned in figures, rates mentioned in words shall be taken as final.

**2h.** Order of enquiry Sl. No. shall be maintained in quotation.

Variation in taxes or any other statutory levi's during contractual delivery period shall be to BHEL's account.

**3. a. VALIDITY OF OFFERS:**

The offers shall be kept open for acceptance **for 90 days** from the date of opening of the tender. In case of extension of tender opening date, the validity shall be suitably revised.

b. **VALIDITY OF RATE CONTRACT:**

**The rate contract with PVC shall be valid for one year from the date of finalization of contract**. Same can be extended again for one year on mutual agreement. BHEL can terminate rate contract earlier also without assigning any reason.

**4. PRICE VARIATION:**

Casting prices shall be revised based on the prices of only four materials [viz; Ferrous scrap, Ferromoly, Nickel & Chromium] ; labour, Fuel & Power index. Price variation due to change in any other input shall not be considered during the currency of RC. Revised rates shall be arrived at by using following formulae:

| Material | Formulae for calculating $X_n$, price for two months period |
|---|---|
| WCB, WCC | $X_n = X_o + 1.0909 (H_n - H_o) + 0.18 * \Delta E + 0.10 * \Delta L$ |
| WC9 | $X_n = X_o + 1.0536 (H_n - H_o) + 0.0115 (Fm_n - Fm_o) + 0.0259 (Cr_n - Cr_o) + 0.18 * \Delta E + 0.10 * \Delta L$ |
| CF8 | $X_n = X_o + 0.7691 (H_n - H_o) + 0.0055 (Fm_n - Fm_o) + 0.2127 (Cr_n - Cr_o) + 0.1036 (Ni_n - Ni_o) + 0.18 * \Delta E + 0.10 * \Delta L$ |
| CF8M | $X_n = X_o + 0.7364 (H_n - H_o) + 0.0273 (Fm_n - Fm_o) + 0.2127 (Cr_n - Cr_o) + 0.1145 (Ni_n - Ni_o) + 0.18 * \Delta E + 0.10 * \Delta L$ |

| **TERMS USED** | |
|---|---|
| $X_o$ | Price finalized & valid for first two months of the rate contract; taken as base for further calculations. |
| $X_n$ | Revised price of the material to be declared after every two months. POs shall be released on this revised price for two months period. |
| $H_o$ | Ferrous scrap price HMS (High Melting scrap 80:20 mix) from the Metal bulletin (monthly avg data for the preceding two months of finalization). Shall be informed by BHEL alongwith final rates. |
| $H_n$ | New Average ferrous scrap price HMS (80:20 mix) taken from the Metal bulletin. (Avg for just preceding two months when the price is being revised) |
| $Fm_0$ | Price of Ferromoly taken from the Metal bulletin, basis as for HMS, $H_0$ above. |
| $Fm_n$ | New Average Price for Ferromoly taken from the Metal bulletin, basis as for HMS, $H_n$ above |
| $Cr_0$ | Price of Chromium, taken from the Metal bulletin, basis as for HMS, $H_0$ above. |
| $Cr_n$ | New Average Price for Chromium taken from the Metal bulletin, basis as for HMS, $H_n$ above |
| $Ni_0$ | Price of Nickel during the start date of the rate contract taken from the website **www.lme.com,** basis as for HMS $H_0$ above. From average values of two months, Price in Rs./kg for all values of two months shall be calculated. |
| $Ni_n$ | New Price arrived for Nickel from the website www.lme.com, basis as for HMS, $H_0$ above |

| | |
|---|---|
| **ΔE** | Change in Wholesale Price Index Numbers– All-India basis reference taken from http://rbi.org.in/home.aspx>>publications>>Monthly>>RBI bulletin>>Prices [Table no. 21]-1.2: Fuel and Power. ΔE will be calculated as per below formula:<br>**ΔE=(En-E0)/E0*X0*0.18;** where E0 is base index for Fuel & Power and En is index for Fuel & Power for new months |
| **ΔL** | Change in Consumer Price Index Numbers for Industrial Workers – All-India basis reference taken from http://rbi.org.in/home.aspx>>publications>>Monthly>>RBI bulletin>>Prices [Table no. 19]-1. ΔL will be calculated as per below formula:<br>**ΔL=(Ln-L0)/L0*X0*0.10;** where L0 is base index for labour and En is index for labour for new months |
| All prices used in formulae are in Rs. per kg. $ (USD) to Rs. price shall be taken from www.rbi.org.in .<br>Rs./kg value for any variant shall be derived for each value by using $/kg for respective date(nearest preceding date) and then average shall be derived for the period. For foreign supplier also new rate by PVC will be calculated in INR firstly. For calculating rate in INR, PVC formula on landed cost to BHEL (L1 rate in INR) will be applied. In this calculation for conversion of H, Fm, Cr, Ni rate from $ to INR, the $ (USD) rate at respective date (the date at which metal rate is taken) will be taken. Then this new rate in INR will be converted to $ (USD) by considering $ rate at tender opening date. | |

Finalized prices shall be applicable for two months from the date of finalization of rate contract. These finalized prices shall be taken as base prices, $\mathbf{X_o}$. Base indices shall be taken as avg. of indices published in the period of previous two months from date of finalisation. New casting rates to be operated for POs to be released from the end of two months from RC finalization date shall be declared based on indices for the previous two months

**5. SCOPE OF SUPPLY:**

Material shall be supplied as per the applicable latest Technical Delivery Conditions (TDC)/ Material Standard requirements/Drawings/RT Procedure and other requirement as given in the Purchase Order. The TDC applicable for Indian suppliers is TDC:0412 Rev26/TDC6396Rev00/TDC6400Rev 01 (or latest applicable) as per the requirement and for foreign supplier is TDC:0:433 Rev00 (or latest applicable).

***Purchase orders for castings which involve Creep testing/IGC testing shall be released only on mutual consent from the bidders.***

It is made clear that POs released in sets, i.e. [all components for a particular type of valve] have to be supplied in sets only. The claim of vendor for payment of supplies against any PO can be put on hold if the components have not been delivered in sets. However, depending upon our own planning and requirement, BHEL may ask for delivery of some components not in sets, for which due consideration shall be given relieving the vendor from above condition. Also vendor has to supply items in oldest PO first if any item is pending in more than two POs.

**6. WELL KNOWN FOUNDARY:**

It is the responsibility of successful vendor to ensure that all the castings are supplied with IBR TC [Valid IBR Well known Foundry status clearly mentioned on the TC] or under witness pouring clearly endorsed by IBR authority/authorized inspecting authority. The foundry will provide TCs in Form III G/III F (as applicable as per TDC) signed by

competent authority. The cost for witness pouring from authorized inspecting authority has to be borne by supplier.

## 7. DELIVERY SCHEDULE:

There is no firm commitment against tender quantity. During the currency of the Rate Contract, BHEL will release POs from time to time based upon our requirement of any tonnage. Vendor shall be required to complete the order as per the schedule mentioned in PO/delivery requirement given through other communications. Delivery Schedule in the POs shall be given based on the monthly commitment given in the Annexure A by supplier. For pattern development items, minimum 3 month time shall be given for the supply of sample castings.

## 8. ACCESS TO MANUFACTURING PREMISES:

While Purchase Orders placed on the vendor are under execution, authorized representatives of BHEL shall be allowed free access to the manufacturing facilities for the purpose of inspection or monitoring the progress of purchase orders. This access will also be extended to representatives of BHEL's customers accompanying the authorized representative/s of BHEL, if our contractual requirements with our customers call for the same.

## 9. PROCEDURE FOR CASTING WEIGHT ESTABLISHMENT

Weights already established are attached along with tender documents. Weights of same patterns for different material grade castings shall be same. These established weights shall be applicable to all vendors. Weights shall be established again only on revision of dimensions of component. Weight shall be established as per clause no. 08 of TDC: 0:412: Rev 26 (or latest applicable). Rate of any item shall be derived by multiplying established weight with rate per kg for the period when PO is being released. When a vendor is taking any item as a new development, if his weight is less than already established weight, this weight will be considered as new established weight and binding on all vendors. If his weight is more than already established weight, the already established weight shall be binding on the vendor. For any new item, not established till date, the first verified weight by BHEL after complete dimensional verification and acceptance shall be declared as established weight (as per clause No. 08 of TDC). Payments shall be made on established weights only. Additional claim of any vendor due to his extra weight over and above the established weight shall not be entertained.

## 10. DEVELOPMENT ORDERS FOR CASTINGS REQUIRING NEW PATTERNS:

If a party has already developed a particular type and size of casting, regular orders will be placed for those castings. For the item/s for which pattern/s is yet to be developed by the party, in the first instance, a developmental order/s will be placed on mutual consent basis. The vendor has to develop the pattern maximum within 45 days and supply first sample castings within next 30-45 days of pattern completion report submitted to BHEL, failing which BHEL may cancel the PO. Vendor need to submit the pattern completion report on the lapse of 45 days from the date of PO placement. Bulk supply shall be undertaken only after sample clearance. Quality requirement of new developments shall be as per TDC:0412 Rev26/TDC6396Rev00/TDC6400Rev 01/TDC:0:433 Rev00(or latest revisions applicable from time to time) besides other technical documents. Pattern development

items shall be considered on par with the development orders as considered in SEARP clause 5.2 according to which development orders shall not be subjected to LD clause and shall also not be subjected to Risk Purchase clause.

**11. TERMS OF PAYMENT:**

a. Due payment against supplies received shall be due after 30 days of receipt and acceptance of material and shall be paid within next 15 days' period. In case of any deviation from standard payment term mentioned, BHEL at its discretion may load on the item price at ''Base rate of SBI (as applicable on the date of bid opening; Techno-commercial bid opening) + 6% shall be considered for loading for the period of relaxation sought by bidders.

b. Documents to be submitted (if applicable)
   i. Tax invoice (Invoice shall be GST compliant and should contains all the required information such as GST No, HSN code etc.)
   ii. Transporter copy along with material/consignment.
   iii. Material Test Certificates (MTC) and
   iv. Compliance Certificate.
   v. Radiographic films and reports, if required.
   vi. Third Party Inspection reports, if applicable.
   vii. Packing Note

c. GST registration number is to be submitted by qualified vendor as per GST law.

d. It is mandatory to mention proper material codes in the invoices and separate invoices to be raised for different POs.

***e. BHEL releases payment through EFT mode ONLY. Necessary details may please be submitted by filling required format before release of payment.***

***f. Conditions relating to release of GST portion:***

Payment of GST portion will be released to vendor only upon completion of statutory requirement and further subject to following:

The reimbursement of GST portion of invoice shall be released only upon: -

5. vendor declaring such invoice in his GSTR-1and
6. receipt of goods and Tax invoice by BHEL and
7. Confirmation of payment of GST thereon by vendor on GSTN portal.
8. Above is subject to receipt of goods/service and tax invoice thereof along with vendor
   declaring invoice in his return and paying GST within timeline prescribed for availing ITC
   by BHEL.

- In case GST credit is delayed/denied to BHEL due to non/delayed receipt of goods and/or tax invoice or expiry of timeline prescribed in GST law for availing such ITC, or any other reasons not attributable to BHEL, GST amount shall be recoverable from vendor along with interest levied / leviable on BHEL.

In case vendor delays declaring such invoice in his return and GST credit availed by BHEL is denied or reversed subsequently as per GST law, GST amount paid by BHEL towards such lTC reversal as per GST law shall be recoverable from vendor/contractor alongwith interest levied / leviable on BHEL.

**For Foreign Supplier:**

Payment shall be made in USD/INR only. 100% payment shall be made within 30-45 days of acceptance of received material at IVP Goindwal and receipt of following dispatch

documents.

Documents Required (Complete in all respects)

a. Bill of Lading.
b. Packing list & Invoice
c. Country of origin Certificate
d. Test Certificates / Compliance Certificate
e. PBG for 10% value of contract. The validity of PBG should be for 18 months from acceptance of material at BHEL with additional 2 months for claim period. Vendor has to furnish a Performance Bank Guarantee from a consortium Bank at no extra cost in a proforma attached.
f. A Certificate that :

One copy of Tests / Compliances Certificate with non-negotiable documents, comprising of House Airway Bill, Invoice, Packing list, Country of origin Certificate, applicable drawings and catalogues, duly signed and stamped, have been sent separately to the port Consignee, purchaser

**Attn: SDGM/** MM Department, BHEL, IVP Goindwal Sahib -143422 Distt. Tarn Taran, Punjab –India and to DGM / Finance, <<Same address>>

Above documents should include your Registration numbers such as GST no, PAN no, any other applicable statutory document etc.

***BHEL releases payment through EFT mode ONLY. Necessary details may please be submitted by filling required format before release of payment.***
It is mandatory to mention proper material codes in the invoices and separate invoices to be raised for different POs and Radiographed castings. It is necessary to send MTCs and RT films along with material, failing which material will not be accounted for and no receipt will be given. Also RT charges are to be mentioned in same invoice in which material is being supplied. Above documents should include your Registration numbers such as GST no, PAN no. etc.

## 12. INSPECTION:

**a.** All required tests (Physical properties, Chemical properties, Heat Treatment, NDE, Visual, Surface finish etc.) as called in referred material standard/BHEL/TDC/drawing etc shall be carried out by vendor at no extra cost. **BHEL may decide to inspect itself/arrange third party at vendors' works itself as and when necessary with prior intimation to the vendor.** No additional charges shall be claimed for such inspections.
**b.** Third party inspection charges will be borne by BHEL. Moreover all required infrastructure (testing, tools etc) have to be arranged by supplier.
**c.** **Vendor will give inspection call sufficiently in advance considering the delivery period stipulated in the purchase order**.
**d.** Material Test Certificates (MTC), Inspection reports and Compliance/Guarantee Certificate are to be provided along with the supplies.
**e.** Latest applicable revisions of standards/procedures to be referred. International/National standards are to be arranged by vendor.

**f.** Any inspection carried out before supply by vendor/incoming stage at BHEL not withstanding, if any defect/non-conformity is noted during processing, the same shall be attended/replaced by vendor at no extra cost.

**g.** Necessary tooling including thread gauges etc have to be arranged by vendor. Only in exceptional cases, based on BHEL discretions item/nature, BHEL may consider request to provide gauges if available with BHEL. But in no case this shall be linked with delivery of material

**h.** Sample castings are to be identified by vendor in the delivery challan as "Sample" and the dimensional reports and RT reports are to be provided to BHEL along with supply. Also mention "Sample" on castings with white paint.

**i.** RT castings have to be mentioned "RT" on castings with white paint.

**j.** Material code as mentioned in PO is to be mentioned on all casting with paint.

**k.** BHEL representative from unit or CQ is authorized to carry out audits along with TPIA at vendor's works before clearing the items for dispatch.

## 13. RADIOGRAPHY:

Consistent radiography quality is to be ensured and to be maintained uniformly in bulk supply with adequate process and method controls. Since the castings required are of radiographic quality, BHEL reserves the right to conduct radiographic testing of sample pieces at its own arrangement and derive conclusion of soundness of casting supplied against the said lot/heat based on the results of such testing.

- Standard requirement of radiography of castings shall be as per TDC:0412 Rev26/TDC6396Rev00/TDC6400Rev 01 TDC:0:433 Rev00
- Any additional requirement shall be specifically called for in PO.
- BHEL intends to get delivery of castings along with radiographed sets as ordered. The claim of vendor for payment of supplies against any PO can be put on hold if the requisite no. of radiographed sets has not been delivered by then. BHEL shall reserve the right to select any sample from a lot offered and get it radiographed at vendor's works.

As per requirement of BHEL, vendor will be required to submit radiographic test reports as specified in the purchase orders released under the purview of the contract. BHEL will review and evaluate radiography films and RT reports and reserves the discretion to do so at the premises of the vendor.

Radiography procedure shall be as per ASME B 16.34, as mentioned in BHEL's TDC:0412 Rev26/TDC6396Rev00/TDC6400Rev 01/ TDC:0:433 Rev00 Clause 7, S. No. 1. All the radiography films shall be dispatched to BHEL without delay either before the castings are being dispatched or along with the castings. Vendor shall undertake radiography on new development as per TDC:0412 Rev26/TDC6396Rev00/TDC6400Rev 01/TDC:0:433 Rev00.

**RT charges for Indian supplier: Fixed RT charges @ $Ir_{192}$ : Rs 0.99 & $Co_{60}$ : Rs 1.50 per sq. cm shall be paid on actual verified film area.**

**RT charges for Foreign supplier: Fixed RT charges @ $Ir_{192}$ : Rs 0.99 & $Co_{60}$ : Rs 1.50 per sq. cm shall be paid on actual verified film area.**

## 14. REPAIR OF CASTINGS:

All castings shall be supplied free of defects like shrinkage, hot tears and process variable defects like sand inclusion, slag inclusion, gas entrapment etc. If any casting is found containing defects more than allowable limit, the same shall be upgraded at foundry itself before dispatch to BHEL with necessary documentation, enabling BHEL to make use of such castings immediately for production.

Castings at different stages of manufacturing are found to be defective shall be repaired at the defective area and the repaired area shall be accepted after performing requisite NDT at vendors cost for further acceptance. BHEL shall decide about the areas to be repaired in all such cases.

**Castings that are found defective after receipt at BHEL, if necessary repair of the castings will be carried out by BHEL and repair charges @ Rs. 19.10 per cc for Carbon Steel, Rs. 21.00 per cc for Alloy Steel and Rs. 24.20 per cc for Stainless Steel grades shall be deducted from any of the running bills of the vendor.**

In case of rejection of casting after machining/ assembly/testing due to defects more than allowable limits or major variation in dimensions etc. then the entire cost incurred till that stage shall be deducted from any of the running bills of the vendor.

## 15. REPLACEMENT OF REJECTIONS

If the material is rejected due to defective workmanship during inspection or at the time of actual use, within the guarantee period (i.e. as per clause 17), the rejected material shall be replaced by the supplier. Corresponding quantity shall be treated as unsupplied against respective purchase order till replacement is received at BHEL. If the material is found defective and rejected during use for which payment has already been released the rejected quantity shall be supplied free of cost by the vendor within a month of intimation of the rejection by BHEL.
Lifting of rejected material is under Supplier's scope. BHEL will inform related invoice, qty etc to supplier. Supplier is expected to give the plan to lift and advance intimation when visiting to lift the material. Material should be lifted within one month from date of intimation. After one month BHEL will not be responsible for rejected material. BHEL may decide to send the rejected material on To Pay basis to supplier. Any leniency/ unresponsiveness/delay on part of supplier may lead to appropriate action by BHEL. Any request to postpone in written may be considered but replacement should not be linked with lifting of material

Item/s pending in previous PO has to be billed in previous PO only. Otherwise BHEL will be free to adjust the supplies in previous PO. Any implication of GST etc will be on supplier's account. For this it is desirable to reconcile the pending PO statement every month/frequently. BHEL will give pending PO statement every month. This can also be viewed at Portal (http://vis.bheltry.co.in/mm/index.jsp).

## 16. LOADING:

Rate Contract will be entered into requisite no. of vendors to ensure that our requirement is met. For this, BHEL reserves the right to give counter offers to other than L1 vendor except highest bidder.

1. Tender quantity shall be divided in the proportion 60:15:25 (60% for L1, 15% for L2 and 25% for MSE's) in case the L1 vendor is not a MSE subject to following conditions:

   I. L2 acceptance of L1 rates.
   II. In tender, participating Micro and Small Enterprises quoting price within price band of L1+15 per cent shall also be offered 25% quantity of tender quantity at L1 price in a situation where L1 price is from someone other than a Micro and Small Enterprise. In case of more than one such Micro and Small Enterprise, the supply shall be shared equally. If there are more than one MSE in the price band of L1+ 15% to whom the offer has been sent and some of them reject the offer, then the remaining quantity shall be distributed equally to the MSEs accepting L1 prices.
   III. 25% from the 25% quantity (i.e. 6.25% of the tender quantity) offered to the MSE's shall be reserved for MSE's owned by SC/STs. In event of failure of such Micro and Small Enterprises to participate in tender process or meet tender requirements and L1 price, 6.25 per cent quantity for Micro and Small Enterprises owned by SC/ST entrepreneurs shall be met from other Micro and Small Enterprises. 3% from within the 25% quantity offered to the MSE's will be offered to women owned MSE's. Failure to participate by any MSE owned by women; this 3% quantity shall be offered to other MSE's.
   IV. In case any MSE vendor does not accept the counter offer, the above mentioned 25% quantity shall be offered to L2.
   V. If there is no MSE in the Price band of L1+15% then the 25% quantity shall be offered to L2 vendor.
   VI. If other suppliers (other than L1) are not under MSE then 60% quantity shall be given to L1 and 40% quantity shall be offered to L2 supplier.

2. In case if the L1 vendor is MSE then quantity shall be provided as 60 % for L1, 30.75% for L2, 6.25% tender quantity shall be offered to the MSEs owned by SC/ST's in the price band of L1+15% and 3% quantity shall be offered to the MSEs owned by women entrepreneur. In event of failure of such Micro and Small Enterprises to participate in tender process or meet tender requirements and L1 price, 6.25 per cent sub-target for procurement earmarked for Micro and Small Enterprises owned by SC/ST entrepreneurs and 3 per cent sub-target for procurement earmarked for Micro and Small Enterprises owned by women entrepreneurs shall be met from L2 vendor.

3. In case the L1 vendor is MSE owned by SC/ST Women entrepreneur then quantity shall be provided as 60 % to L1 and 40% to L2.

All above offered quantity are subject to acceptance of L1 rates.

In case of non- acceptance of counter offer by any vendor after above applicable provisions the whole quantity would be offered to L1 vendor. All above mentioned preferences shall be given to MSEs and SC/STs only on the submission of documentary evidence in the Techno-Commercial part only.

Above indicated criteria is liable to be monitored/controlled/regulated by BHEL from the first ordering itself/subsequent ordering based on commitment given by L1 vendor/other vendors, past performance, quality of castings, availability of patterns etc.

Once the rate contract is in place with various vendors based on acceptance of counter offer, while placing regular Purchase orders, BHEL will place orders for required quantity based on pattern availability, pattern development time, BHEL delivery requirement, pending POs at any time with vendor (including previous RC POs) and vendor's monthly commitment, capability, delivery records and quality. Performance of vendors shall be monitored as per the performance monitoring system attached. Though BHEL requires and intend to procure castings in sets for a particular size,

but BHEL reserve the right to release POs of casting components in any proportion to meet its requirement. The vendor has to mention his monthly commitment in MT.

## 17. GUARANTEE:

Vendor shall give a guarantee of 18 months from the date of dispatch or 12 months from date of receipt, whichever is earlier (for undertaking repairs/replacement of any defect observed during machining/ assembly/ hydraulic testing or subsequent processing not withstanding the previous acceptance. Entire cost of such castings will be deducted from any of the running bills/PBG). In case of non-acceptance of this term bid will be rejected.

## 18. LIQUIDATED DAMAGES:

'Time is the essence of the contract'. As such, delivery of goods specified in the Purchase Orders released under the scope this contract shall be made within the time limit prescribed therein. Liquidated damages clause will be applicable for delayed supplies @ 0.5% per week or part thereof subject to a maximum of 10% of undelivered portion.
If any vendor does not accept LD ½% of the supply for each week of delay subject to a maximum of 5%, their offer is likely to be rejected by BHEL and the price bid shall not be opened. Bidders accepting for 10% LD shall not be loaded on account of LD. However bidders who offer any other % LD [between 5% to 10%] shall be loaded @ % deviation from 10% and their accepted %.e.g. If a bidder accepts for a max of 7% LD only, their offer would be loaded @ 3% (10 – 7 = 3).
BHEL reserves the right to receive or not receive material after the due date of PO.

## 19. RISK PURCHASE:

BHEL shall be entitled to terminate the contract/pending POs at any stage and to purchase elsewhere at the risk and cost of the vendor, either the whole of the goods or any part thereof which the supplier has failed to deliver or dispatch within the time stipulated as aforesaid. Vendor shall be liable for the losses, which BHEL may sustain by way of such risk purchase.

## 20. SUB-CONTRACT:

The purchase order or any part thereof shall not be sub-contracted, assigned or otherwise transferred without previously obtaining the BHEL's consent in writing.

## 21. FORCE MAJEURE:

If at any time during the continuance of the contract, the performance in which or in any part by either party of any obligations under the contract are prevented or delayed by reason of any war, hostilities, acts of public enemy, civil commotion, sabotage, fires, explosions, epidemics, quarantine restrictions, or acts of God (hereinafter referred to "an events" then provided the notice of happening of any such event is given by either party to the other within 21 days of the occurrence thereof, neither party shall by reason of such event be entitled to terminate the contract nor shall either party have any claim for damages against the other in respect of such non-performance and delay in performance and delivery under the contract shall be resumed as soon as practicable after such event has come to an end or ceased to exist. If the performance in whole or part of any obligation under the

contract is prevented or delayed by reason of any such event, claims of extension of time shall be granted for periods considered reasonable by BHEL subject to prior notification by the vendor to BHEL of the particulars of the event and supply to BHEL, if required, of any supporting evidence. Any waiver of time in respect of partial installment shall not be deemed a waiver of time in respect of remaining deliveries.

**22. DISPUTES:**

In the event of any dispute and/or difference arising between the Vendor and BHEL as to interpretation and/or execution of the contract and/or the respective rights and liabilities of the parties, such disputes and/or differences shall be referred to the sole arbitrator nominated by BHEL. The provisions of the Indian Arbitration Act and the rules there under shall apply to such arbitration. The award passed by the arbitrator shall be final and conclusively binding on all the parties.

**23. JURISDICTION:**

The court of the place from where the purchase order is issued during the contractual period shall alone have jurisdiction to decide any dispute arising out of or in connection with the purchase order.

**24. Integrity Pact:**

(a) IP is a tool to ensure that activities and transactions between the Company and its Bidders/ Contractors are handled in a fair, transparent and corruption free manner. A panel of Independent External Monitors (IEMs) have been appointed to oversee implementation of IP in BHEL.

The IP as enclosed with the tender is to be submitted (duly signed by authorized signatory who signs in the offer) along with techno-commercial bid. Only those bidders who have entered into such an IP with BHEL would be competent to participate in the bidding. In other words, entering into this Pact would be a preliminary qualification.
Details of IEM for this tender is furnished below:

| | |
|---|---|
| Name | Sh. Shri Arun Chandra Verma, IPS (Retd.) |
| Address | Flat No. C -1204,C Tower, Amrapali, Platinum Complex, Sector 119, Noida (U.P.) |
| Email | acverma1@gmail.com |

| | |
|---|---|
| Name | Shri Virendra Bahadur Singh, IPS (Retd.) |
| Address | H. No. B-5/64, Vineet Khand, Gomti Nagar, Lucknow – 226010 |
| Email Id | vbsinghips@gmail.com |

(b) Please refer Section-8 of IP for Role and Responsibilities of IEMs. In case of any complaint arising out of the tendering process, the matter may be referred to the IEM mentioned in the tender.

Note:
No routine correspondence shall be addressed to the IEM (phone/ post/ email) regarding the clarifications, time extensions or any other administrative queries, etc on the tender issued. All such clarification/ issues shall be addressed directly to the tender issuing(procurement) department.

For all clarifications/ issues related to the tender, please contact:

Name: 1) Amit Kumar/Sr. Engineer/MM 2) Sumeet Bansal/Sr.Manager/MM
3) Rakesh Kumar/ SDGM/MM
Dept.: Material Management
Address: 433, industrial complex, IVP Goindwal Dist. Tarn taran Punjab 143422

Phone: (Landline) (1) 01859-224618/15/28
Phone: Mobile (2) 98153-44974/9878006105/9815960461
Email: 1) amit.garg@bhel.in (2)sbansal@bhel.in (3) kumarrakesh@bhel.in
Fax: 01859-222061

**25. GENERAL:**

a) BHEL will not be bound by any power of attorney granted by the vendors or by changes in the composition of the firm made subsequent to the execution of the contract. They may, however, recognize such power of attorney and changes after obtaining proper legal advice, the cost of which will be chargeable to the vendor concerned.
b) BHEL reserves the right to extend the due date of opening, which shall be informed. Validity of offer shall be deemed to be revised accordingly.
c) BHEL reserves the right to accept or reject any part or whole of the tender of a bidder by assigning a valid reason thereof. BHEL reserves the right to cancel the tender without assigning any reason thereof and without any obligation before any commitment.
d) Acceptance of all terms and conditions, in the form of signed copy of T&C or confirmation separately written, shall be submitted along with quotation. If nothing is mentioned, it shall be concluded that terms and conditions are acceptable.
e) BHEL may increase/decrease item/s based on BHEL requirement before price bid opening. Suitable price implication may be asked from suppliers.
f) BHEL may drop item/items from tender at any stage of tender before placing PO. BHEL may also delete PO with consent with supplier within delivery date of PO.
g) After releasing PO, it is assumed that supplier has accepted PO if we do not receive acknowledgement from supplier within 5 days of date of PO.
h) BHEL reserves the right to negotiate with L1 bidder/s of Reverse auction/sealed bid.
i) The Drawings and Technical documents given in this enquiry are the sole property of BHEL. It must not be used directly or indirectly in any way detrimental to the interest of the company.
j) If vendor has mentioned **FOR Punjab** in his quotation, then it will be considered as FOR Goindwal Sahib (Pb.).
k) **Documents submitted with the offer shall be signed and stamped in each page by authorized representative of the bidder.**

**For Foreign Supplier only:**

a. All documents are to be in "ENGLISH LANGUAGE" only.
b. Contract No. and Import License No. are to be inducted in all documents
c. Invoice should show the description of the goods and the unit rate of each item as in the purchase contract.
d. Packing list must indicate case identification, case dimension, and case contents, gross and net weight.

e. Against each item in the invoice and packing list, the serial number of the corresponding item in the purchase contract or as per order acknowledgement should be indicated.
f. Demurrage charges due to delayed presentation of the original shipping documents for the reason not attributable to the buyer should be borne by the seller
g. All documents should be submitted in triplicate

**26. WORDS AND FIGURES:**

a. If, in the price structure quoted for the required goods/ services/ works, there is discrepancy between the unit price and the total price (which is obtained by multiplying the unit price by the quantity}, the unit price shall prevail and the total price corrected accordingly, unless in the opinion of the purchaser there is an obvious misplacement of the decimal point in the unit price, in which case the total price as quoted shall govern and the unit price corrected accordingly.
b. If there is an error in a total corresponding to the addition or subtraction of subtotals, the subtotals shall prevail and the total shall be corrected; and
c. If there is a discrepancy between words and figures, the amount in words shall prevail, unless the amount expressed in words is related to an arithmetic error, in which case the amount in figures shall prevail subject of (a) and (b) above.
d. If there is such discrepancy in an offer, the same shall be conveyed to the bidder with target date upto which the bidder has to send his acceptance on the above lines and if the bidder does not agree to the decision of the purchaser, the bid is liable to be ignored.
e. Bids should be free from correction, overwriting, using corrective fluid, etc. Any interlineation, cutting, erasure or overwriting shall be valid only if they are attested under full signature(s) of person(s) signing the bid else shall be liable for rejection.
f. All overwriting/cutting, etc will be numbered by bid opening officials and announced during bid opening.

**27. PREFERENCES FOR MSE's :**

Preferences as mentioned in "Public Procurement Policy for Micro and Small Enterprises (MSEs) Order, 2012" shall be given to Micro and Small enterprises.

Main points which are mentioned in the above order are as follows:

- 25% Procurement of the tender value shall be made from MSE (Micro, Small Enterprises) firms.
- 6.25% from the above 25% procurement quantity shall be procured from MSE's owned by SC /ST's. Failure to participate by any MSE owned by SC/ST's this 6.25% quantity shall be procured from other MSEs.
- 3% from within the 25% quantity offered to the MSE'sshall be reserved for women owned MSE's. Failure to participate by any MSE owned by SC/ST's this 3% quantity shall be procured from other MSEs.
- EMD shall be exempted for MSE's. All these benefits are subject to production of all statutory documents

- In tender, participating Micro and Small Enterprises quoting price within price band of L1+15 per cent shall also be allowed to supply a portion of requirement by bringing down their price to L1 price in a situation where L1 price is from someone other than a Micro and Small Enterprise and such Micro and Small Enterprise shall be allowed to supply up to 20 per cent of total tendered value. In case of more than one such Micro and Small Enterprise, the supply shall be shared proportionately (to tendered quantity).

**"MSE suppliers can avail the intended benefits only if they submit along with the offer UAM(Udyog Aadhar Memorandum), attested copies of either EM II certificate having deemed validity (five years from the date of issue of acknowledgement in EM II) or valid NSIC certificate or EM II certificate along with attested copy of a CA certificate (Format enclosed at Annexure -1 where deemed validity of EM II certificate of five years has expired) applicable for the relevant financial year (latest audited). Date to be reckoned for determining the deemed validity will be the date of bid opening (Part 1 in case of two part bid). Non submission of such documents will lead to consideration of their bid at par with other bidders. No benefit shall be applicable for this enquiry if any deficiency in the above required documents is not submitted before price bid opening. If the tender is to be submitted through e-procurement portal, then the above required documents are to be uploaded on the portal. Documents should be notarized or attested by a Gazetted officer."**

**28. BANNED FIRMS:**

The offers of the bidders who are on the banned list as also the offer of the bidders, who engage the services of the banned firms, shall be rejected. The list of banned firms is available on BHEL website www.bhel.com.

**29. FRAUD PREVENTION POLICY:**

The Bidder along with its associate/collaborators/sub-contractors/sub-vendors/consultants/service providers shall strictly adhere to BHEL Fraud Prevention Policy displayed on BHEL website http://www.bhel.com and shall immediately bring to the notice of BHEL management about any fraud or suspected fraud as soon as it comes to their notice.

**30. <u>CLARIFICATIONS:</u>**

The correspondence exchanged against the tender from both tenderer and BHEL through email & through e-procumbent portal are considered as valid document legally though it is not signed. It is treated as valid confirmations made on behalf of the respective company and very much comes under the legal ambit of the business transaction and hence it is binding on both the parties to the business. Any transaction pertaining to the tender from both the parties of business done round the clock irrespective of the office or business hours of the companies, are valid legally and binding on both the parties. This applies to the extent only in such cases where deadline time for transaction is not specifically declared by either or both the patties to the business. In case Letter of Intent (LOI) is issued through email, the PC generated time and date of mail shall be construed as the official time and date of release of LOI. In as much as this date is within the last date of validity given by the bidder the LOI is said to have been issued within the validity period and shall be bidding on both the parties to the business.

**G31. REVERSE AUCTION:**

BHEL reserves the right to go for Reverse Auction (RA) (Guidelines as available on www.bhel.com) instead of opening the sealed envelope price bid, submitted by the bidder. This will be decided after techno-commercial evaluation. Bidders to give their acceptance with the offer for participation in RA. Non-acceptance to participate in RA may result in non-consideration of their bids, in case BHEL decides to go for RA.

Those bidders who have given their acceptance to participate in Reverse Auction will have to necessarily submit 'Process compliance form' (to the designated service provider) as well as 'Online sealed bid' in the Reverse Auction. Non-submission of 'Process compliance form' or 'Online sealed bid' by the agreed bidder(s) will be considered as tampering of the tender process and will invite action by BHEL as per extant guidelines for suspension of business dealings with suppliers/ contractors (as available on www.bhel.com).

The bidders have to necessarily submit online sealed bid less than or equal to their envelope sealed price bid already submitted to BHEL along with the offer. The envelope sealed price bid of successful L1 bidder in RA, if conducted, shall also be opened after RA and the order will be placed on lower of the two bids (RA closing price & envelope sealed price) thus obtained. The bidder having submitted this offer specifically agrees to this condition and undertakes to execute the contract on thus awarded rates.
If it is found that L1 bidder has quoted higher in online sealed bid in comparison to envelope sealed bid for any item(s), the bidder will be issued a warning letter to this effect. However, if the same bidder again defaults on this count in any subsequent tender in the unit, it will be considered as fraud and will invite action by BHEL as per extant guidelines for suspension of business dealings with suppliers/ contractors (as available on www.bhel.com).

## G32. SUSPENSION OF BUSINESS DEALINGS WITH DEFAULTERS

The offers of the bidders who are under suspension as also the offers of the bidders, who engage the services of the banned firms, shall be rejected. The list of banned firms is available on BHEL web site **www.bhel.com.**

1.0 Integrity commitment, performance of the contract and punitive action thereof:

1.1. Commitment by BHEL:
BHEL commits to take all measures necessary to prevent corruption in connection with the tender process and execution of the contract. BHEL will during the tender process treat all Bidder(s) in a transparent and fair manner, and with equity.

1.2. Commitment by Bidder/ Supplier/ Contractor:

1.2.1. The bidder/ supplier/ contractor commit to take all measures to prevent corruption and will not directly or indirectly influence any decision or benefit which he is not legally entitled to nor will act or omit in any manner which tantamount to an offence punishable under any provision of the Indian Penal Code, 1860 or any other law in force in India.

1.2.2. The bidder/ supplier/ contractor will, when presenting his bid, disclose any and all payments he has made, and is committed to or intends to make to agents, brokers or

any other intermediaries in connection with the award of the contract and shall adhere to relevant guidelines issued from time to time by Govt. of India/ BHEL.

1.2.3. The bidder/ supplier/ contractor will perform/ execute the contract as per the contract terms & conditions and will not default without any reasonable cause, which causes loss of business/ money/ reputation, to BHEL.

If any bidder/ supplier/ contractor during pre-tendering/ tendering/ post tendering/ award/ execution/ post-execution stage indulges in mal-practices, cheating, bribery, fraud or and other misconduct or formation of cartel so as to influence the bidding process or influence the price or acts or omits in any manner which tantamount to an offence punishable under any provision of the Indian Penal Code, 1860 or any other law in force in India, then, action may be taken against such bidder/ supplier/ contractor as per extant guidelines of the company available on www. bhel.com and/or under applicable legal provisions

**G33. DISCLAIMER CLAUSE: (Only for E procurement)**

Neither the Organization (Bharat Heavy Electricals Ltd.) nor the service provider (M/s e Procurement Technologies limited) is responsible for any failure of submission of bids due to failure of internet or other connectivity problems or reasons thereof.

**G34. PREFERENCE TO MAKE IN INDIA**

For this procurement, Public Procurement (Preference to Make in India), Order 2017 dated 15.06.2017, 28.05.2018 & 29.05.2019 and subsequent Orders issued by the respective Nodal Ministry shall be applicable even if issued after issue of this NIT before finalization of contract/PO/WO against this NIT.

In the event of any Nodal Ministry prescribing higher or lower percentage of purchase Preference and / or local content in respect of this procurement, same shall be applicable.

**G35. LOI (Letter of Intent)**

BHEL may issue LOI prior to the PO for any reason whatsoever. The LOI in such cases is to be treated as PO for all practical purposes and all the Terms & Conditions of the tender shall be applicable from the date of issue of LOI.

**<u>Check List for Tender</u>**

Necessary Document to be submitted in Part-I:

- Acceptance of all techno-commercial terms and conditions. If nothing is mentioned for any terms and condition, it shall be concluded that the same is accepted.
- Monthly supply commitment in MT
- Signed copy of Integrity Pact.
- Annexure-A duly filled
- SC/ST certificate and MSME certificate if applicable

Document to be submitted in Part-II:

Prices per kg mentioned in figures as well as in words. **No other condition shall be mentioned.**

Procedure to finalise the rate contract:

- Receipts of quotations (Part-I & Part-II): **By 1400 Hrs on due date**
- Opening of part-I: **By 1530 Hrs on due date**
- Evaluation of part-I of vendors and declaration of price bids opening or reverse auction : **Date shall be announced and informed to all bidders.**

**Note: Kindly ensure that each page of document given with quotation is signed by authorized representative of company.**

Annexure A

| Sr. No. | Description | Vendor to mention |
|---|---|---|
| 1 | Attach list of patterns | |
| 2 | Maximum pattern development time for new item | |
| 3 | Number of patterns for development that can be taken by vendor/month. Accordingly order for new development will be given. | |
| 4 | Maximum weight of single piece casting that can be delivered by vendor (In Kg) | |
| 5 | Minimum time after which supply will start after receipt of regular POs for items in which pattern is available. | |
| 6 | Typical limitation in some pattern/group of patterns collectively, Please mention the size and quantity per month which can be delivered. | |
| 7 | Monthly commitment for IVP Goindwal (MT) | |

Signature of vendor with stamp

## 1.0 MATERIAL:

Specification : ASME / ASTM {Latest on date of Purchase Order (PO)}:
CARBON STEEL (CS) : SA / ASTM A216 WCB, WCC & 352 LCB , LCC
ALLOY STEEL (AS) : SA / ASTM A217 WC6, WC9, C12A.
STAINLESS STEEL (SS): SA / ASTM A351 CF3M,CF8,CF8C & CF8M.
Additional Requirement : As listed below(Supplementary to Specification)
Size, Qty, Grade/Class : As per Purchase order & Drawing / Pattern.

## 2.0 CHEMICAL COMPOSITION AND PROCESS:

Melting: As per the Specification, Fully Killed.
Carbon= 0.25% maximum : for SA / ASTM A216 WCB only.
Carbon= 0.15% maximum : for SA / ASTM A217 WC6 & WC9
Product Analysis on test bar for each melt including residual elements shall be carried out and reported in Test Certificates.

**In case of API-6D materials the following additional requirements shall be met:**

CS: Carbon=0.23% max.(in ladle) and 0.25% max.(in Product analysis)
Carbon Equivalent=0.43 max.(in ladle) and 0.45 max.(in Product analysis)
Carbon Equivalent=%C+(%Mn/6)+(%Cr+%Mo+%V)/5+(%Ni+%Cu)/15
SS: Carbon=0.03% max. except as below.
Carbon=0.08% max.for stabilized steels with Nb >10xC.and
for stabilized steels with Nb and Ta mass of (Nb+Ta)>8xC.
.

## 3.0 DIMENSIONS AND TOLERANCES:

Tolerances as per the Drawing.
Non tolerance Dimensions for valve components as per the Drawing:VL:STDC:023 (Latest)

## 4.0 HEAT TREATMENT :(HT)

CS. Castings of High Pressure Valve.(Cl.1500 & above),QCNRV & CRHNRV: Shall be in Annealed Condition.
AS. Castings: Normalized and Tempered.
SA/ASTM A217 WC6 :Normalizing Temperature 920-950 ºC and Tempering Tempareture 680 ºC (Minimum)
SA/ASTM A217 WC9 :Normalizing Temperature 920-950 ºC and Tempering Tempareture 720 ºC (Minimum)
SA/ASTM A217 C12A: Normalizing Temperature 1050-1080 ºC and Tempering temperature 750-780ºC
Others: Heat Treat as per the Specification.

## 5.0 MECHANICAL TESTS:

Test bars to be cast integral with the casting or separately. If cast separately, they shall be cast at the same time as the castings and from the same ladle. A metal strip with heat number stamped shall be fused with the test bar during casting, to maintain traceability. If one(1) casting is made from more than one heat, separate test bars for each heat/cast to be poured & all test bars shall satisfy the requirements. Following tests to be conducted per heat / Heat treatment batch, as per ASTM A370. .

| S. NO | TEST | Material specification | | | | |
|---|---|---|---|---|---|---|
| | | SA/ASTM A216, 217 | | | SA/ASTM A352 | SA/ASTM A 351 |
| 1 | Tension Test | As per the Specification | | | | |
| 2 | Hardness Test | As per the Specification | | | 225 BHN. max. | Not applicable |
| 3 | Bend Test Specimen 1"x ¾" | | Angle of Bend | Dia of Pin | Not applicable | S3 of SA703 |
| | | WCB | 90º | 2t | | |
| | | WCC | 90º | 2t | | |
| | | WC6 | 120º | 3t | | |
| | | WC9 | 90º | 3t | | |
| | | C12A | 90º | 2t | | |
| 4 | Charpy- U Impact for all Quick Closing Non-Return Valve, Cold Re-Heat Non-Return Valve Bodies FOR IBR. | As per IBR. at Room temperature. Acceptance: Avg /Single=36J/32J min. | | | Not applicable | Not applicable |
| 5 | Charpy- V Impact for Low-Pressure Bye-pass Valve BODIES. | At 20 Deg.C temperature. Acceptance: Avg /Single=27J/21J min. | | | Not applicable | Not applicable |

In addition to above IMPACT Test for API -6D and PED Valves shall be done as below

| S. NO | TEST | Material specification | | |
|---|---|---|---|---|
| | | SA/ASTM A216, 217 | SA/ASTM A352 | SA/ASTM A 351 |
| 1 | Charpy- V Impact for CE Marking-Pressure Equipment Directive (PED) items as Specified in the Purchase Order. | At 20 Deg.C temperature. Acceptance: Avg /Single=40J/27J min. | As per Specification | Not applicable |
| 2 | Charpy- V Impact for API -6D items if design temperature below minus 29ºC ( -29 ºC) | Test Temperature=As per specification Acceptance: Avg/Single=34J/25J | As per Specification | Not applicable |

## 6.0 FETTLING, DRESSING & CLEANING:

- Dressing of castings- Free from risers, in gates, notches, undercuts and deep marks etc.
- Fused wires, parting line fins, chills etc. shall be removed by grinding.
- Gas cutting if employed shall be done before Heat treatment.
- Preheat the material to 200 Deg. C. before gas cutting the Alloy steels.
- Castings shall be blast cleaned both inside and outside for the removal of fused sand, scales etc.
- Visual inspection of castings for surface quality as per MSS-SP-55 shall be carried out.

## 7.0 NON DESTRUCTIVE TESTING (NDT) AFTER HEAT TREATMENT:

The NDE requirements for the castings shall meet the following as shown in Table-1 below. Castings shall be free from surface and internal defects like porosity, shrinkage, sand inclusion, crack, cold shut and other harmful defects. All castings shall be of Radiographic Quality.

Radiographic Testing Procedure: As per ASME B16.34.
Magnetic Particle Inspection (MPI): As per ASTM E709
Liquid Penetrant Inspection (LPI): As per ASTM E165

**Table: 1**

| Product | Components | Charecteristics | Type of NDE Check | | | | |
|---|---|---|---|---|---|---|---|
| | | | RT | RT Area | RT Acc. Std | MT $ | MT Area |
| Conventional Valves (Gate, Globe & Check) and API 6D Gate Valves | Body,Bonnet | < 600Class | 10% | ASME B16.34 (latest) as per SPL class Valve RT requirement | As per Table: 2 | -- | -- |
| | Body,Bonnet | 600Class & above | 100% | | | -- | |
| | Body,Bonnet & Wedge | 1500Class & above | 100% | | | 100% | All accessible surfaces including belly |
| | | All Special Class Valves | 100% | | | 100% | |
| **Quick Closing Non-Return Valve & Cold Re-Heat Non-Return Valve** | Body | 150 & 300 Class | 10% | Butt Weld Ends, Change of sections including seat and neck portion | As per Table: 2 | 100% | All accessible surfaces including belly |
| | | 600Class & above | 100% | | As per Table: 2 | 100% | All accessible surfaces . |
| | Body (Special) | 150 & 300 Class | | | | | |
| | | 600Class & above | | | | | |
| CRH Isolating Device | Body | < 600Class | 100% | ASME B16.34 (latest) as per SPL class Valve RT requirement. | As per Table: 2 | -- | All accessible surfaces including belly |
| | | 600Class & above | | | | -- | |
| | | 1500Class & above | | | | 100% | |
| **$** LPI Can be substituted for MPI in all inaccessible area and for stainless steel castings. | | | | | | | |

**Table: 2**

| TYPE OF DISCONTINUITY | ACCEPTANCE LEVEL CATEGORY | < 600 CLASS | | ≥ 600 CLASS | |
|---|---|---|---|---|---|
| | | Thickness ≤2" | Thickness >2" | Thickness ≤2" | Thickness >2" |
| Gas Porosity | A | A2 | A3 | A1 | A2 |
| Sand/Slag inclusion | B | B3 | B3 | B2 | B2 |
| Shrink Type-1 | C | CA2 | CA3 | CA1 | CA2 |
| Shrink Type-2 | C | CB3 | CB3 | CB2 | CB2 |
| Shrink Type-3 | C | CC3 | CC3 | CC2 | CC2 |
| Crack | D | NONE | NONE | NONE | NONE |
| Hot Tear | E | NONE | NONE | NONE | NONE |
| Unfused Inserts (Chills/Chaplets) | F | NONE | NONE | NONE | NONE |

a. **Butt welding ends shall be free of shrinkage, crack & hot tear.**
b. **For butt weld ends Gas hole/Porosity and sand inclusions to be within level A1 &B1 respectively**

7.1 **Acceptance for MPI & LPI:** ASME B16.34.

(1)Cracks are not permitted.

(2)For linear indications (with length > 3 times width) other than cracks,indications must be separated by a distance greater than the length of an acceptable indication. Maximum allowable length of the indication shall be:
(a) For thickness (t) up to 13mm= 8mm,
(b) For thickness from 13 to 25mm = 13mm
(c) For thickness above 25mm =18mm.

(3)For rounded indications (circular or elliptical with length < 3 times width), 4 or more indications in a line separated by 1.5 mm or less edge to edge are unacceptable. Maximum allowable diameter of the indication shall be:
(a)For thickness up to 13mm =8mm, and (b)For thickness above 13mm =13mm

## 8.0 Development Stage of Casting:

a. During developmental stage, RT on sample castings (3 Castings with nominal bore (NB) ≤100mm. & 1 casting with NB > 100mm) for each type of casting shall be carried out on entire area of the casting to the acceptance requirement of Table-1 & 2. In addition 100% MPI on all critical areas like change of sections, riser & in gate portions shall be carried out. If machining operation is involved the same shall be done and defect free condition shall be ensured. If any defect noticed in RT and machining, the type of defect shall be analysed and accordingly size of gate, runner, riser and pouring methodology to be modified to get defect free casting. Sampling shall be continued till achieving sound casting. After satisfactory development of sampling bulk production shall be started. However weld repaired areas identified in visual examination for doubtful indications to be probed by MPI.

b. During developmental stage RT on sample castings of yoke, yoke clamp & wedge/disc shall meet Level-3 of ASTM E446/E186/E280

## 9.0 REPAIR:

Castings with unacceptable cracks, hot tears, shrinkage, etc. to be rectified by grinding & if required by welding. Welding to be done by qualified welder and the procedure used for welding shall be qualified in accordance with ASTM A 488/ASME Section IX.

.For IBR items welder shall be qualified as per IBR and approved by IBR approved Inspecting Authority.

The welding consumables and parameters shall be as per the qualified procedures. The recommended welding consumables are given in Table below.

| Casting Material | Electrode Specification | Minimum Preheat in ° C | Minimum Post heat Temperature in ° C | PWHT Temperature in ° C |
|---|---|---|---|---|
| A 216 WCB, A 216 WCC | E 7018 - A1 | 150 | 150 for 2 hours | 595 to 625 |
| A 217 WC6 | E 8018 B2 | 220 | 220 for 2 hours | 650 to 680 |
| A 217 WC9, A 217 C5, CSN 422744 | E 9018 B3 | 220 | 220 for 2 hours | 675 to 705 |
| A 217 C12A | E 9015 B9<br>E 9018 B9<br>Ref Note - 1 | 220-280 | 220-280 for 2 hrs | 750 to 770 |
| A 217 CA15 | E 410 | 220 | 220 for 2 hours | 760 to 790 |
| A 351 CF3M, A 351 CF8M | E 316 | Nil | Nil | Nil |
| A 351 CF8, A 351 CF8C | E 347 | Nil | Nil | Nil |

**Note – 1:**

A. The following welding filler materials only shall be used.
**Cromocord 9 M (Oerlikon)**
**Fox C 9 MV (Bohler)**
**Cromo 9V (Thyssen)**

B. C12A castings to be Post weld heat treated irrespective of depth or size of repair

9.1 All repaired areas after PWHT shall be subjected to NDE and Hardness test. Hardness shall meet material Specification. (If Specified)

## 10.0 SURFACE TREATMENT:

SS castings to be pickled & passivated (after repair & HT if any) as per ASTM A380. Satisfactory passivity of the surface to be checked using SS passivity test kit (Free iron test). After passivation, rinsing & test, the rinsed demineralised water to be checked for chloride with 1% Silver nitride, which shall not exceed 0.5 PPM

## 11.0 DIMENSIONAL CHECK:

a. Dimensional reports for Sample castings and for All fully Machined castings are to be furnished along with other Certificates.
b. For all QCNRV & CRHNRV Body Castings, thickness of the body shall be checked on throughout the surface on a grid of 100mm x 100mm and recorded & reports to be submitted to BHEL.

## 12.0 MARKING AND PACKING:

Following details to be marked on each casting on a raised pad using low stress stamps and Castings shall be suitably packed to avoid damage during transit.

1. Foundry code, 2.Specification, grade & Melt number, 3.Other details as per drawing.

## 13.0 INSPECTION AND CERTIFICATION:

13.1: For IBR items

a) If the Foundry is recognized as "Well known Foundry" under IBR, Items shall be inspected by foundry and works certificate along with IBR *Form III F* shall be issued.
b) If the Foundry is not recognized as "Well known Foundry" under IBR, Items shall be inspected by an Inspecting Authority approved by IBR and work certificate along with IBR *Form III G* shall be issued.

13.2: For CE-marking items the materails shall be inspected by M/s. LLoyd's/ TUV/ BVQI or anyother agengy approved for PED of CEmarking, if the foundry is not certified to ISO 9000 by any of the . above organisation.

13.3 For API items, the castings shall be inspected by the foundry and works certificate with details like PSL No., Temperature class rating, size shall be issued.

13.4 Test certificates shall contain the following details.

1.Purchase Order No.(BHEL),TDC No. & Test certificate number
2. Specification and Grade with applicable year of code, Heat Number, Quantity & Size
3. Steel making process, Chemistry including incidental elements - Heat wise.
4. Heat treatment details of the material and test bars.
5. Mechanical test results, NDE test results with reference & acceptance standard.
6. Repair details including HT, if any, Cleaning & Surface treatment details.
7. Any other information like clearance of sample casting.
8. Dimensional Inspection Report where applicable.

## 14.0 AUDIT CHECKS AT BHEL:

BHEL reserves the right to carry out audit checks for chemistry, HT condition, mechanical test and NDT on representative test bars or job. Items found defective during check or subsequent processing at BHEL are liable for rejection.

## 15.0 END USE:

For use in valves and other components like flanges, fittings etc. for high temperature & high pressure applications meeting IBR, ASME Section I, ASME B 16.34, PED and API.

| | | | |
|---|---|---|---|
| D.SUDHAKARAN<br>QA | M.RAJAKUMAR<br>ENGG/VALVES | S.SELVARAJAN<br>QUALITY ASSUARANCE | V.RAVIKUMAR<br>QUALITY ASSURANCE |
| PREPARED BY | REVIEWED BY | | APPROVED BY |

VENDOR PERFORMANCE MONITORING AND RATING SYSTEM

The vendors shall be assessed with respect to the following main factors and calculated for each consignment/purchase order/ cumulative quantity from all consignments within the period of six months.

| Rating | Weightage(%) |
|---|---|
| Quality | 60 |
| Delivery | 30 |
| Service | 10 |

**QUALITY RATING**

**Total Quality Rating will be as per formula given below.**

**QUALITY RATING (QR)** $= [(Q_1+0.75xQ_2+0xQ_3)\ x60]/Q$

Where Q - Quantity inspected
$Q_1$ - Quantity accepted
$Q_2$ - Quantity accepted with concession/ deviation/rectification
$Q_3$ - Quantity rejected

The pre-inspection report (at supplier's works) shall include the quantity accepted after rework in Q2 category.

**DELIVERY RATING**

Vendor shall be rated on delivery parameters whereas Delivery rating shall be 30 in case of adherence to PO delivery.

For non-adherence to PO Delivery (i.e delay in supply), marks to be deducted in proportion of delay to PO delivery.

Deduction = 30* delay in days/PO delivery in days.

DR = 30-Deduction

Note:
1. Delay is calculated on the date of GR/RR basis .
2. In cases, where delay is on account of BHEL in providing input, the delivery shall be extended with amendment to PO.
3. In case of rectification/replacement of item, the delivery is to be reckoned from the original supply date.

**SERVICE RATING [SR, SR']**

Service rating [SR'] out of 10 marks shall be given based on feedback from Quality/User department and Purchase department assessment of vendors. The service rating shall be

10 in case no negative feedback against the vendor for the given supply. Else, the service rating should be reduced proportionally based on the Demerit factor.

In case negative feedback (Substantiated by documentary evidence) is received from Shop Floor/Site on the supplies made, at a later date, demerit factor should be applied again accordingly.

Demerit factors for service rating shall be calculated based on % of rework and rejection [both taken separately and then added] as under:

| % criteria | DF in case of Rework % |
|---|---|
| ≤2% | 0 |
| >2% and ≤5% | 2 |
| >5% and ≤10% | 3 |
| >10% and ≤15% | 4 |
| >15% | 5 |

| % criteria | DF in case of Rejection % |
|---|---|
| ≤0.5% | 0 |
| >0.5% and ≤2% | 2 |
| >2% and ≤5% | 3 |
| >5% and ≤10% | 4 |
| >10% | 5 |

The SR' derived shall be updated by subtracting above demerit factor value, i.e. SR = SR'-DF. By virtue of SR' < DF in any case, i.e. SR coming negative, it shall be considered as "0".

The Vendor Performance Rating (VPR) will be equal to total sum of QR, DR & SR.

**VENDOR PERFORMANCE RATING (VPR) = QR+DR+SR**

Based on the total score the vendor performance will be rated as below.

| Total Score | Rating | Action |
|---|---|---|
| 95-100 | A1 | Can be considered for award appreciation/commendation letter. |
| 90-95 | A | Vendor can be considered for self certification or for reduced witness points during inspection. |
| 75-90 | B | No action in normal case. If any deterioration comes to notice on analysis, the vendor shall be informed. |
| 60-75 | C | (i) Vendor/ processes shall be subject to thorough analysis for identification of areas for improvement.<br>(ii) Enquiry to be sent only after concerned MM Head approval |
| <60 | D | To be dealt in accordance with the extant guidelines on suspension of Business dealings with Suppliers/contractors. |

Ajit Kumar

Annexure-1

# INTEGRITY PACT

**Between**

Bharat Heavy Electricals Ltd. (BHEL), a company registered under the Companies Act 1956 and having its registered office at "BHEL House", Siri Fort, New Delhi - 110049 (India) hereinafter referred to as "The Principal", which expression unless repugnant to the context or meaning hereof shall include its successors or assigns of the ONE PART

**and**

_____, (description of the party along with address), hereinafter referred to as "The Bidder/ Contractor" which expression unless repugnant to the context or meaning hereof shall include its successors or assigns of the OTHER PART

## Preamble

The Principal intends to award, under laid-down organizational procedures, contract/s for Tender enquiry 1920-118E for the procurement of upto 500 C castings through Annual rate contract. The Principal values full compliance with all relevant laws of the land, rules and regulations, and the principles of economic use of resources, and of fairness and transparency in its relations with its Bidder(s)/ Contractor(s).

In order to achieve these goals, the Principal will appoint Independent External Monitor(s), who will monitor the tender process and the execution of the contract for compliance with the principles mentioned above.

## Section 1- Commitments of the Principal

1.1 The Principal commits itself to take all measures necessary to prevent corruption and to observe the following principles:-

1.1.1 No employee of the Principal, personally or through family members, will in connection with the tender for, or the execution of a contract, demand, take a promise for or accept, for self or third person, any material or immaterial benefit which the person is not legally entitled to.

1.1.2 The Principal will, during the tender process treat all Bidder(s) with equity and reason. The Principal will in particular, before and during the tender process, provide to all Bidder(s) the same information and will not provide to any Bidder(s) confidential/ additional information through which the Bidder(s) could obtain an advantage in relation to the tender process or the contract execution.

1.1.3 The Principal will exclude from the process all known prejudiced persons.

1.2 If the Principal obtains information on the conduct of any of its employees which is a penal offence under the Indian Penal Code 1860 and Prevention of Corruption Act 1988 or any other statutory penal enactment, or if there be a substantive suspicion in this regard, the Principal will inform its Vigilance Office and in addition can initiate disciplinary actions:

Sumeet



अमित कुमार / AMIT KUMAR
वरि. अभियंता (एम एम, पी एंड डी) / Sr. Engineer (MM, P&D)
भारत हेवी इलेक्ट्रिकल्स लिमिटेड
Bharat Heavy Electricals Limited
(A Govt. of India Undertaking)
इण्डस्ट्रियल वाल्व्स प्लांट/Industrial Valves Plant
गोइंदवाल(तरन तारन)/Goindwal (Tarn Taran)

सुमीत बांसल / Sumeet Bansal
वरिष्ठ प्रबंधक (एम एम) / Sr. Manager (MM)
भारत हेवी इलेक्ट्रिकल्स लिमिटेड
Bharat Heavy Electricals Limited
(A Govt. of India Undertaking)
इण्डस्ट्रियल वाल्व्स प्लांट / INDUSTRIAL VALVES PLANT
गोइंदवाल साहिब तरन तारन/ GOINDWAL SAHIB TARN TARAN

## Section 2 - Commitments of the Bidder(s)/ Contractor(s)

2.1 The Bidder(s)/ Contractor(s) commit himself to take all measures necessary to prevent corruption. He commits himself to observe the following principles during his participation in the tender process and during the contract execution.

2.1.1 The Bidder(s)/ Contractor(s) will not, directly or through any other person or firm, offer, promise or give to the Principal or to any of the Principal's employees involved in the tender process or the execution of the contract or to any third person any material, immaterial or any other benefit which he/ she is not legally entitled to, in order to obtain in exchange any advantage of any kind whatsoever during the tender process or during the execution of the contract.

2.1.2 The Bidder(s)/ Contractor(s) will not enter with other Bidder(s) into any illegal or undisclosed agreement or understanding, whether formal or informal. This applies in particular to prices, specifications, certifications, subsidiary contracts, submission or non-submission of bids or any other actions to restrict competitiveness or to introduce cartelization in the bidding process.

2.1.3 The Bidder(s)/ Contractor(s) will not commit any penal offence under the relevant Indian Penal Code (IPC) and Prevention of Corruption Act; further the Bidder(s)/ Contractor(s) will not use improperly, for purposes of competition or personal gain, or pass on to others, any information or document provided by the Principal as part of the business relationship, regarding plans, technical proposals and business details, including information contained or transmitted electronically.

2.1.4 Foreign Bidder(s)/ Contractor(s) shall disclose the name and address of agents and representatives in India and Indian Bidder(s)/ Contractor(s) to disclose their foreign principals or associates. The Bidder(s)/ Contractor(s) will, when presenting his bid, disclose any and all payments he has made, and is committed to or intends to make to agents, brokers or any other intermediaries in connection with the award of the contract.

2.2 The Bidder(s)/ Contractor(s) will not instigate third persons to commit offences outlined above or be an accessory to such offences.

2.3 The Bidder(s)/ Contractor(s) shall not approach the Courts while representing the matters to IEMs and will await their decision in the matter.

## Section 3 - Disqualification from tender process and exclusion from future contracts

If the Bidder(s)/ Contractor(s), before award or during execution has committed a transgression through a violation of Section 2 above, or acts in any other manner such as to put his reliability or credibility in question, the Principal is entitled to disqualify the Bidder(s)/ Contractor(s) from the tender process or take action as per the separate "Guidelines on Banning of Business dealings with Suppliers/ Contractors", framed by the Principal.

## Section 4 - Compensation for Damages

4.1 If the Principal has disqualified the Bidder from the tender process prior to the award according to Section 3, the Principal is entitled to demand and recover the damages equivalent Earnest Money Deposit/ Bid Security.

4.2 If the Principal has terminated the contract according to Section 3, or if the Principal is entitled to terminate the contract according to section 3, the Principal shall be entitled to

सुमीत बंसल / Sumeet Bansal
वरिष्ठ प्रबंधक (एम एम) / Sr. Manager (MM)
भारत हेवी इलेक्ट्रिकल्स लिमिटेड
Bharat Heavy Electricals Limited
(A Govt. of India Undertaking)
इण्डस्ट्रियल वाल्व्स प्लांट / INDUSTRIAL VALVES PLANT
गोइंदवाल साहिब तरन तारन/ GOINDWAL SAHIB TARN TARAN

AMIT KUMAR
वरि. अभियंता (एम.एम.) / Sr. Engineer (M&D)
भारत हेवी इलेक्ट्रिकल्स लिमिटेड
Bharat Heavy Electricals Limited
(A Govt. of India Undertaking)
इण्डस्ट्रियल वाल्व्स प्लांट/Industrial Valves Plant
गोइंदवाल(तरन तारन)/Goindwal (Tarn Taran)

demand and recover from the Contractor liquidated damages equivalent to 5% of the contract value or the amount equivalent to Security Deposit/ Performance Bank Guarantee, whichever is higher.

## Section 5 - Previous Transgression

5.1 The Bidder declares that no previous transgressions occurred in the last 3 years with any other company in any country conforming to the anti-corruption approach or with any other Public Sector Enterprise in India that could justify his exclusion from the tender process.

5.2 If the Bidder makes incorrect statement on this subject, he can be disqualified from the tender process or the contract, if already awarded, can be terminated for such reason.

## Section 6 - Equal treatment of all Bidders/ Contractors / Sub-contractors

6.1 The Principal will enter into agreements with identical conditions as this one with all Bidders and Contractors. In case of sub-contracting, the Principal contractor shall be responsible for the adoption of IP by his sub-contractors and shall continue to remain responsible for any default by his sub-contractors.

6.2 The Principal will disqualify from the tender process all bidders who do not sign this pact or violate its provisions.

## Section 7 - Criminal Charges against violating Bidders/ Contractors /Subcontractors

If the Principal obtains knowledge of conduct of a Bidder, Contractor or Subcontractor, or of an employee or a representative or an associate of a Bidder, Contractor or Subcontractor which constitutes corruption, or if the Principal has substantive suspicion in this regard, the Principal will inform the Vigilance Office.

## Section 8 - Independent External Monitor(s)

8.1 The Principal appoints competent and credible Independent External Monitor for this Pact. The task of the Monitor is to review independently and objectively, whether and to what extent the parties comply with the obligations under this agreement.

8.2 The Monitor is not subject to instructions by the representatives of the parties and performs his functions neutrally and independently. He reports to the CMD, BHEL.

8.3 The Bidder(s)/ Contractor(s) accepts that the Monitor has the right to access without restriction to all contract documentation of the Principal including that provided by the Bidder(s)/ Contractor(s). The Bidder(s)/ Contractor(s) will grant the monitor, upon his request and demonstration of a valid interest, unrestricted and unconditional access to his contract documentation. The same is applicable to Sub-contractor(s). The Monitor is under contractual obligation to treat the information and documents of the Bidder(s)/ Contractor(s) / Sub-contractor(s) with confidentiality in line with Non- disclosure agreement.

8.4 The Principal will provide to the Monitor sufficient information about all meetings among the parties related to the contract provided such meetings could have an impact on the contractual relations between the Principal and the Contractor. The parties offer to the Monitor the option to participate in such meetings.

Sumeet

सूमीत बांसल / Sumeet Bansal
वरिष्ठ प्रबंधक (एम एम) / Sr. Manager (MM)
भारत हेवी इलेक्ट्रिकल्स लिमिटेड
Bharat Heavy Electricals Limited
(A Govt. of India Undertaking)
इण्डस्ट्रियल वाल्व्स प्लांट / INDUSTRIAL VALVES PLANT
गोइंदवाल साहिब तरन तारन/ GOINDWAL SAHIB TARN TARAN

अमित कुमार / AMIT KUMAR
वरि. अभियंता (एम एम, पी&डी) / Sr. Engineer (MM, P&D)
भारत हेवी इलेक्ट्रिकल्स लिमिटेड
Bharat Heavy Electricals Limited
(A Govt. of India Undertaking)
इण्डस्ट्रियल वाल्व्स प्लांट/Industrial Valves Plant
गोइंदवाल(तरन तारन)/Goindwal (Tarn Taran)

8.5 The role of IEMs is advisory, would not be legally binding and it is restricted to resolving issues raised by an intending bidder regarding any aspect of the tender which allegedly restricts competition or bias towards some bidders. At the same time, it must be understood that IEMs are not consultants to the Management. Their role is independent in nature and the advice once tendered would not be subject to review at the request of the organization.

8.6 For ensuring the desired transparency and objectivity in dealing with the complaints arising out of any tendering process, the matter should be examined by the full panel of IEMs jointly as far as possible, who would look into the records, conduct an investigation, and submit their joint recommendations to the Management.

8.7 The IEMs would examine all complaints received by them and give their recommendations/ views to CMD, BHEL, at the earliest. They may also send their report directly to the CVO and the Commission, in case of suspicion of serious irregularities requiring legal/ administrative action. IEMs will tender their advice on the complaints within 10 days as far as possible.

8.8 The CMD, BHEL shall decide the compensation to be paid to the Monitor and its terms and conditions.

8.9 IEM should examine the process integrity, they are not expected to concern themselves with fixing of responsibility of officers. Complaints alleging mala fide on the part of any officer of the organization should be looked into by the CVO of the concerned organisation.

8.10 If the Monitor has reported to the CMD, BHEL, a substantiated suspicion of an offence under relevant Indian Penal Code/ Prevention of Corruption Act, and the CMD, BHEL has not, within reasonable time, taken visible action to proceed against such offence or reported it to the Vigilance Office, the Monitor may also transmit this information directly to the Central Vigilance Commissioner, Government of India.

8.11 The number of Independent External Monitor(s) shall be decided by the CMD, BHEL.

8.12 The word `Monitor' would include both singular and plural.

## Section 9 - Pact Duration

9.1 This Pact shall be operative from the date IP is signed by both the parties till the final completion of contract for successful bidder and for all other bidders 6 months after the contract has been awarded. Issues like warranty / guarantee etc. should be outside the purview of IEMs.

9.2 If any claim is made/ lodged during currency of IP, the same shall be binding and continue to be valid despite the lapse of this pact as specified above, unless it is discharged/ determined by the CMD, BHEL.

## Section 10 - Other Provisions

10.1 This agreement is subject to Indian Laws and jurisdiction shall be registered office of the Principal, i.e. New Delhi.

अमित कुमार / AMIT KUMAR
वरि. अभियंता (एम.एम. पी एंड डी) / Sr. Engineer (MM, P&D)
भारत हेवी इलेक्ट्रिकल्स लिमिटेड
Bharat Heavy Electricals Limited
(A Govt. of India Undertaking)
इण्डस्ट्रियल वाल्व्स प्लांट/Industrial Valves Plant
गोइंदवाल(तरन तारन)/Goindwal (Tarn Taran)

सुमीत बांसल / Sumeet Bansal
वरिष्ठ प्रबंधक (एम एम) / Sr. Manager (MM)
भारत हेवी इलेक्ट्रिकल्स लिमिटेड
Bharat Heavy Electricals Limited
(A Govt. of India Undertaking)
इण्डस्ट्रियल वाल्व्स प्लांट / INDUSTRIAL VALVES PLANT
गोइंदवाल साहिब तरन तारन/ GOINDWAL SAHIB TARN TARAN

10.2 Changes and supplements as well as termination notices need to be made in writing. Side agreements have not been made.

10.3 If the Contractor is a partnership or a consortium, this agreement must be signed by all partners or consortium members.

10.4 Should one or several provisions of this agreement turn out to be invalid, the remainder of this agreement remains valid. In this case, the parties will strive to come to an agreement to their original intentions.

10.5 Only those bidders / contractors who have entered into this agreement with the Principal would be competent to participate in the bidding. In other words, entering into this agreement would be a preliminary qualification.

| | |
|---|---|
| For & On behalf of the Principal | For & On behalf of the Bidder/ Contractor |
| (Office Seal) | (Office Seal) |

Place Goindwal Sahib

Date 17/01/2020

| | |
|---|---|
| Witness: | Witness: |
| (Name & Address) Amit Kumar | (Name & Address) |
| BHEL IVP, Goindwal | |

अमित कुमार / Amit Kumar
वरि. अभियंता (एम.एम.,पी एवं डी) /Sr. Engineer (MM, P&D)
भारत हेवी इलेक्ट्रिकल्स लिमिटेड
Bharat Heavy Electricals Limited
(A Govt. of India Undertaking)
इण्डस्ट्रियल वाल्वस प्लांट/Industrial Valves Plant
गोइंदवाल(तरन तारन)/Goindwal (Tarn Taran)

Sumeet

सूमीत बांसल / Sumeet Bansal
वरिष्ठ प्रबंधक (एम एम) / Sr. Manager (MM)
भारत हेवी इलेक्ट्रिकल्स लिमिटेड
Bharat Heavy Electricals Limited
(A Govt. of India Undertaking)
इण्डस्ट्रियल वाल्व्स प्लांट / INDUSTRIAL VALVES PLANT
गोइंदवाल साहिब तरन तारन/ GOINDWAL SAHIB TARN TARAN

**Annexure-E**

.(TO BE STAMPED IN ACCORDANCE WITH STAMP ACT AND THE EXPIRY DATE OF BG MUST BE AFTER 60 DAYS FROM THE DATE OF COMPLETION OF WARRANTY PERIOD)

# PERFORMANCE BANK GUARANTEE

**In accordance of M/s. Bharat Heavy Electricals Limited (A Government of India undertaking, a company incorporated under the Companies Act 1956 having its Registered Office at "BHEL House", SIRI Fort, New Delhi 110 049) through its Industrial Valves Plant located at Goindwal Sahib, Distt. Tarn Taran- 142423 [Punjab] (hereinafter called 'the Company') having entered into a contract with …….hereinafter called ' the said contractor ' which term includes 'suppliers' for the purpose of this Bond and under the terms and conditions of the contract No……. Dt ……. Between BHEL, Goindwal and as per the contract, the contractor / supplier is to furnish a performance Bank guarantee for Rs. ……. for the due performance of the equipment to be supplied under the above referred contract and for the fulfillment of all the terms and conditions of the contract, We …….(indicate the name of the bank) (herein after referred to as the bank) at the request of ……. (Contractor(s) ) do here by undertake to pay the company an amount not exceeding Rs…….against any loss or damage caused to or suffered or would be caused to or suffered by the company by reason of any breach by the said contractor (s) of any of the terms and conditions contained in the said agreement.**

**2. We …….(indicate the name of the bank with full address), do hereby undertake to pay the amounts due and payable under this guarantee without any demur, merely on a demand from the Company stating that the amount claimed is due by way of loss or damage caused to or would be caused to or suffered by the Company by reason of breach by the said Contractor(s) of any of the terms and conditions contained in the said Agreement or by the reason of the contractor(s) 'failure to perform' the said agreement. Any such demand made on the Bank shall be conclusive as regards the amount due and payable by the Bank under this guarantee. However, our liability under this guarantee shall be restricted to an amount not exceeding Rs._____.**

**3. We undertake to pay unconditionally to the Company any money so demanded notwithstanding any dispute(s) raised by the Contractor in any suit, or proceedings pending before any Court or Tribunal or Arbitration or before any other authority relating thereto our liability under this present being absolute and unequivocal. The payment under this guarantee would not wait till the disputes have been decided by any Court or Tribunal or in the arbitration proceedings or by any other authority. The payment so made by us under this Bond shall be a valid discharge of liability for payment thereunder and the Contractor(s) shall have no claim against us for making such payment.**

**4. We…….( indicate the name of Bank), further agree that the guarantee herein contained shall remain in full force and effect during the period that would be taken for the performance of the said Agreement and that it shall continue to be enforceable till all the dues of the Company under or by virtue of the said Agreement have been fully paid and its claims satisfied or discharged or till_____Office / Department/ Division of the Company certifies that the terms and conditions of the said Agreement have been fully and properly carried out by the said Contractor(s) and accordingly discharges this guarantee.**

**5. (I) Unless a demand or claim under this guarantee is made on us in writing on or before the _____we shall be discharged from all the liability under this guarantee thereafter. But where such claim or demand has been preferred by the Company with the Bank before the expiry of the said date, the claim shall be enforceable notwithstanding the fact that the said enforcement is effected after the said date.**

**(ii) For the purpose of this clause, any letter making demand on the Bank by M/s. BHEL dispatched by Registered Post with Ack.Due or by Telegram or by any Electronic media addressed to the above mentioned address of the Bank shall be deemed to be the claim / demand in writing referred to above irrespective of the fact as to whether and when the said**

**letter reaches the Bank, as also any letter containing the said demand or claim is lodged with the bank personally.**

6. **We ……..(indicate the name of Bank), further agree with the company that the Company shall have the fullest liberty without our consent and without affecting in any manner our obligations hereunder to vary any of the terms and conditions of the said agreement or to extend time of performance by the said Contractor (s) from time to time or to postpone for any time or from time to time any of the powers exercisable by the Company against the said Contractor(s) and to forbear or enforce any of the terms and conditions relating to the said Agreement and we shall not be relieved from our liability by any reason of any such variation or extension being granted to the said Contractor(s) or for any forbearence, act or omission on the part of the company or any indulgence by the company to the said Contractor(s) or by any such matter or thing whatsoever which under the law relating would, but for this provision, have effect of not so relieving us.**

7. **This guarantee will not be discharged due to the change in the constitution of the Bank or the Contractor(s).**

8. **It shall not be necessary for the company to proceed against the contractor before proceeding against the guarantor-bank and the guarantee herein contained shall be enforceable against them notwithstanding any security, which the company may have obtained or obtain from the Contractor shall, at the time when proceedings are taken against the guarantor hereunder be outstanding or unrealized.**

9. **Any claim or dispute arising under the terms of this document shall only be enforced or settled in the Courts at Tarn Taran, Punjab, India.**

10. **The guarantor hereby declare that it has power to execute this guarantee and the executant has full powers to do so on its behalf under the proper authorities granted to him/them by the guarantor.**

11. **We ……(indicate the name of Bank) lastly undertake not to revoke this guarantee during its currency except with the previous consent of the company in writing.**

**In witness whereof we……., (indicate the name of Bank) have hereunto setout Bank Seal the_____day _____month 200**
**BANK E-MAIL ID:**
**BANK PHONE NO.**
**BANK FAX NO:**

# LIST OF CONSORTIUM BANKS

**Annexure: J**

List of consortium bank for getting PBG released

| Sl. No. | BANKS |
|---|---|
| 1 | STATE BANK OF INDIA |
| 2 | PUNJAB NATIONAL BANK |
| 3 | HDFC BANK |
| 4 | SYNDICATE BANK |
| 5 | CANARA BANK |
| 6 | INDIAN BANK |
| 7 | ST. BANK OF HYDERABAD |
| 8 | ICICI BANK |
| 9 | STANDARD CHARTERED BANK |
| 10 | UCO BANK |
| 11 | KOTAK MAHINDRA |
| 12 | ORIENTAL BANK OF COMMERCE |
| 13 | STATE BANK OF TRAVANCORE |
| 14 | CENTRAL BANK |
| 15 | IDBI BANK |
| 16 | FEDERAL BANK |
| 17 | HSBC LTD |
| 18 | DEUTSCHE BANK |
| 19 | CORPORATION BANK |
| 20 | CITI BANK |
| 21 | BANK OF BARODA |
| 22 | ABN AMRO BANK |
| 23 | UNITED BANK OF INDIA |
| 24 | VIJAYA BANK |
| 25 | UNION BANK OF INDIA |
| 26 | PUNJAB & SIND BANK |
| 27 | ANDHRA BANK |
| 28 | BANK OF INDIA |
| 29 | AXIS BANK |

Annexure D

BHE:IVP:RT:PR Rev 03

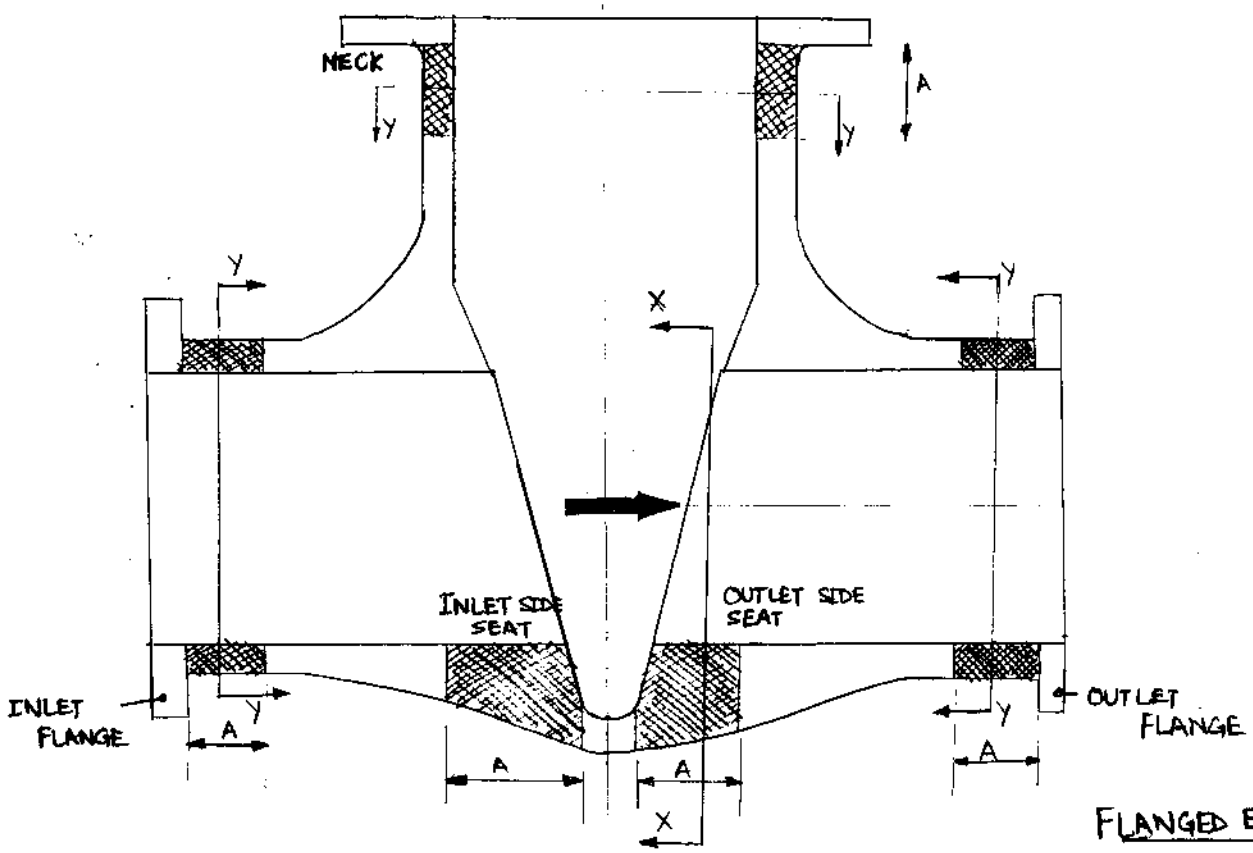


FLANGED END BODY

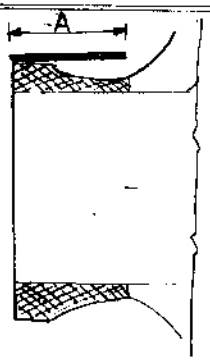


BW END BODY

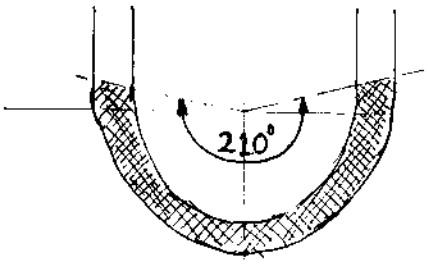


SECTION X-X
210° coverage

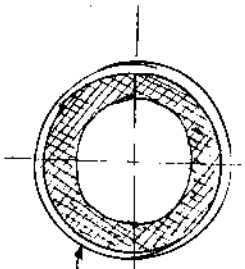

To cover round the shell
SECTION YY

A = Max [3 $t_m$ , 70 mm]
$t_m$ → wall thickness 'min'

SHOOTING LOCATION DESIGNATION

| | |
|---|---|
| AT NECK | : N1, N2, N3, N4.... |
| AT INLET FLANGE PIPE | : A1, A2, A3, A4,.... |
| AT INLET SIDE SEAT | : SA1, SA2, SA3, SA4,.... |
| AT OUTLET SIDE SEAT | : SB1, SB2, SB3, SB4,... |
| AT OUTLET FLANGE PIPE | : B1, B2, B3, B4..... |
| *AT INLET FLANGE FACE | : FA1, FA2, FA3, FA4,.... |
| *AT OUTLET FLANGE FACE | : FB1, FB2, FB3, FB4,.... |

* FOR FLANGED END BODIES ONLY

BHE: INP: RT: PR: Rev 03

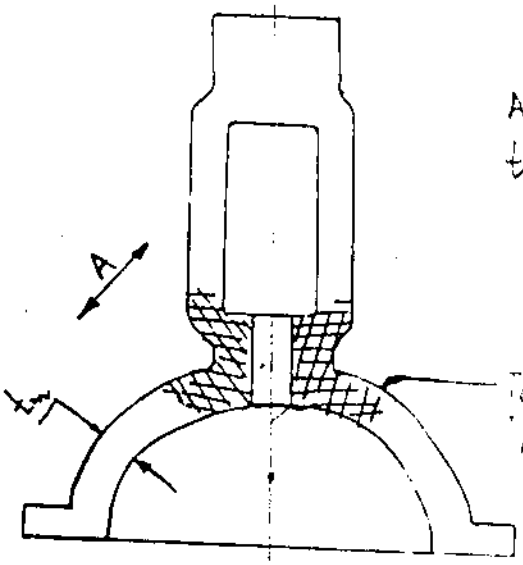


A = Max [3 $t_m$ , 70 mm]

$t_m$ → wall thkness, min

SHOT DESIGNATION AS 1, 2, 3, 4, . . .

SHOOTING SKETCH OF GATE VALVE YOKE / BONNET

# Bharat Heavy Electricals Limited

433, Ind. Valves Plant, GOINDWAL SAHIB (Distt. Amritsar)-143 423.

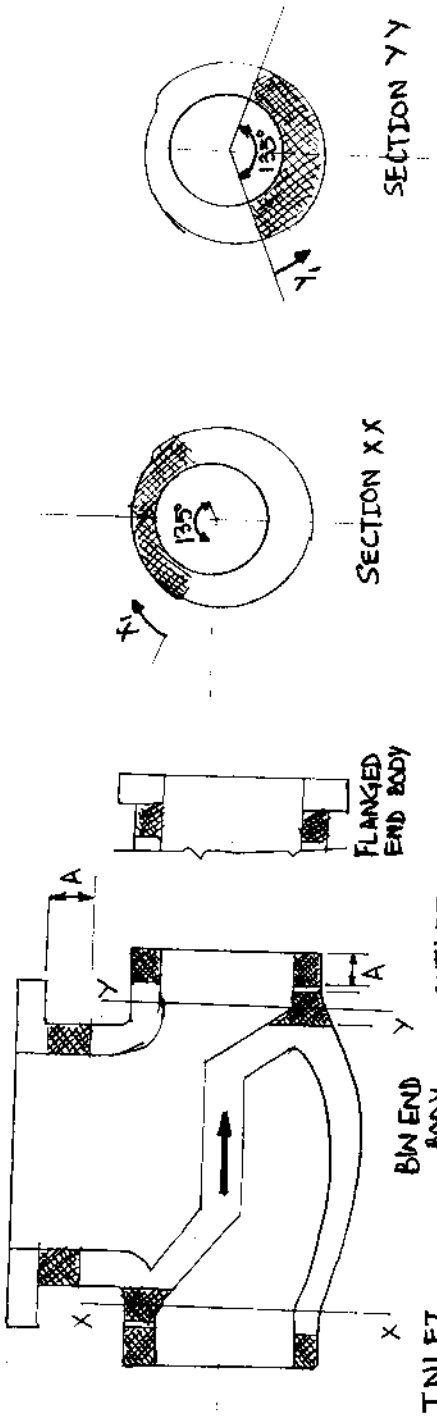


A = Max {3.$t_m$, 70mm}

$t_m$ → min. wall thickness, mm

| SHOOTING LOCATION | DESIGNATION |
|---|---|
| AT NECK : | N1, N2, N3, ... |
| AT INLET END | A1, A2, A3, ... |
| AT OUTLET END | B1, B2, B3, ... |
| AT SECTION XX | $X_1$, $X_2$, ... |
| AT SECTION YY | $Y_1$, $Y_2$, ... |

: BHE : EVP: RT : PR Rev 3

SHOWING SKETCH OF CONN. F

A = max [2 $t_m$, 70 mm]

$t_m$ = min thickness, mm

To cover full area round the bonnet

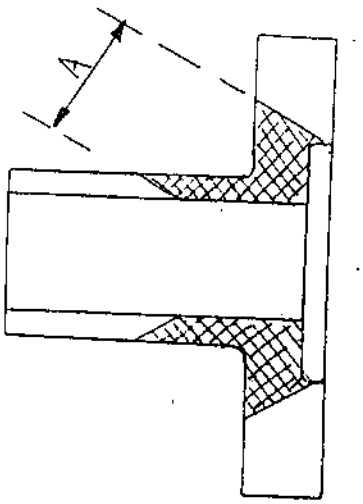

BHE: IVP: RT: PR Rev 03

## SHOOTING SKETCH OF FLAP VALVE BODY

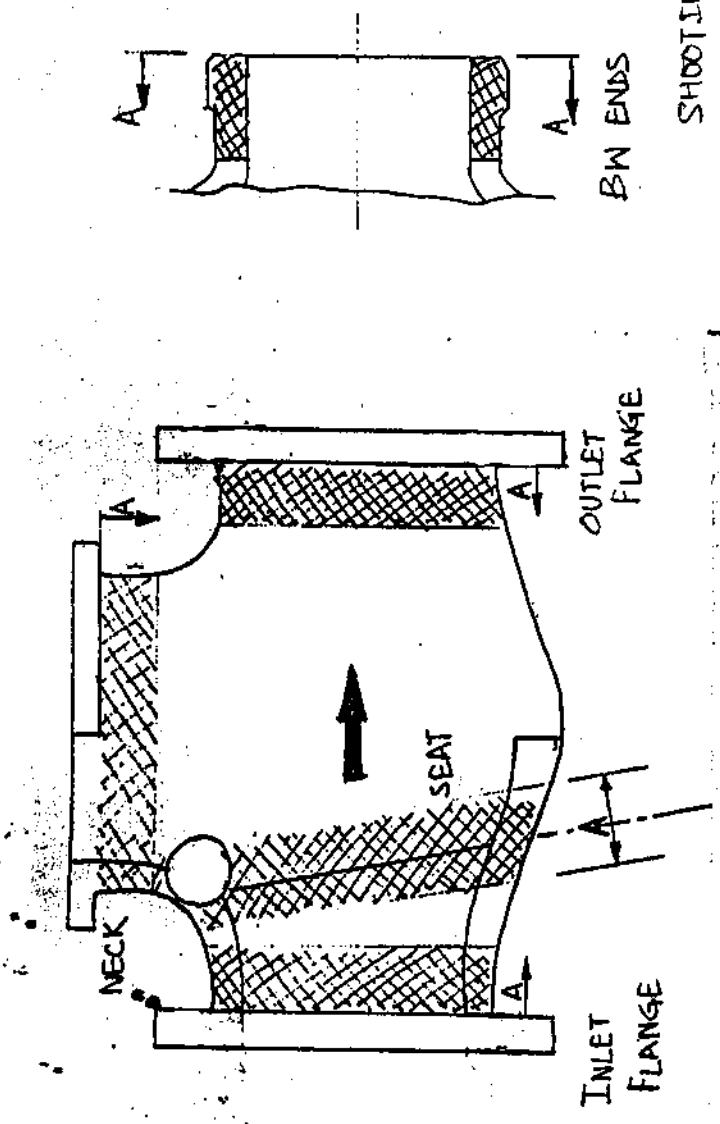


| SHOOTING LOCATION | DESIGNATION |
|---|---|
| AT NECK | N1, N2, N3, ... |
| AT INLET PIPE | A1, A2, A3, |
| AT INLET BW END | FA1, FA2, ... |
| AT OUTLET PIPE | B1, B2, B3, |
| AT OUTLET BW END | FB1, FB2, FB3, ... |
| AT SEAT | S1, S2, S3, ... |

DIRECTION AND SHOT LOCATION

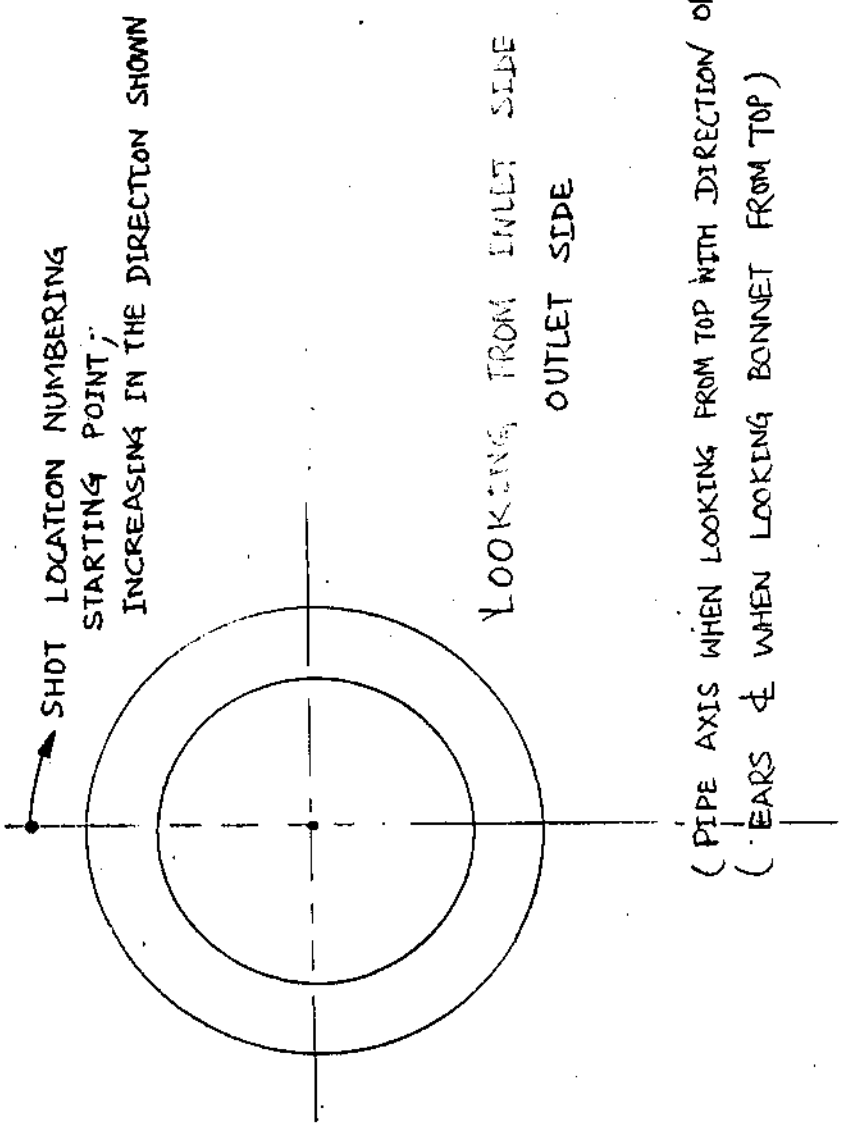

DRAWING NO. 1-V-0000-05185R

ALL DIMENSIONS ARE IN MILLIMETRES. FOR TOLERANCES OF UNTOLERANCED DIMENSIONS DURING MANUFACTURE REFER RELEVANT QCP/QP

## SECTION BB

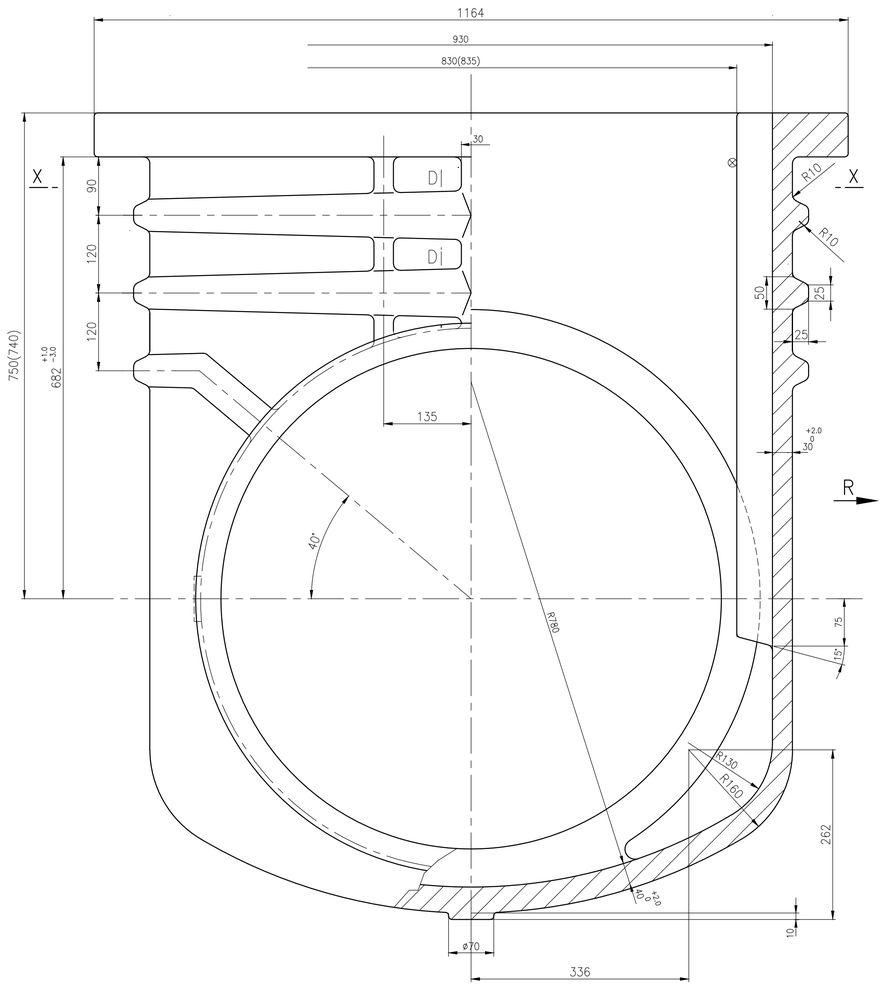


## SECTION DD




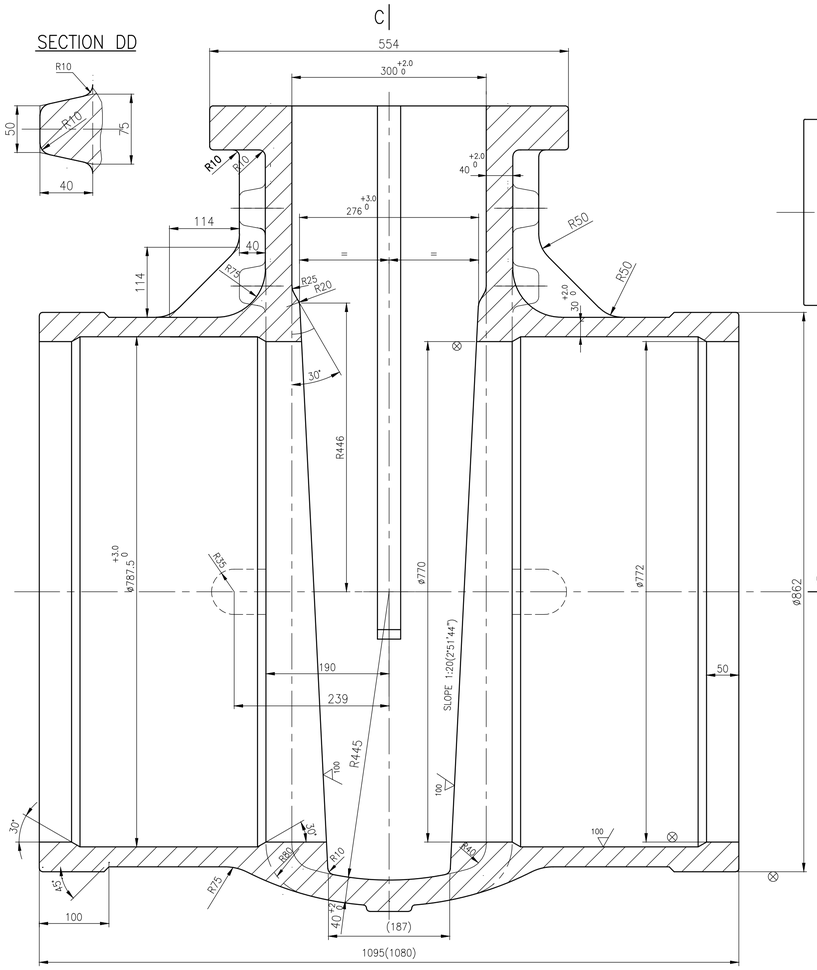


## MARKING DETAILS ON CASTING

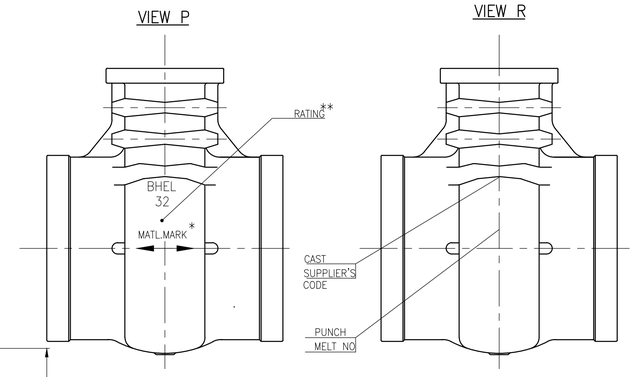


## SECTION CC

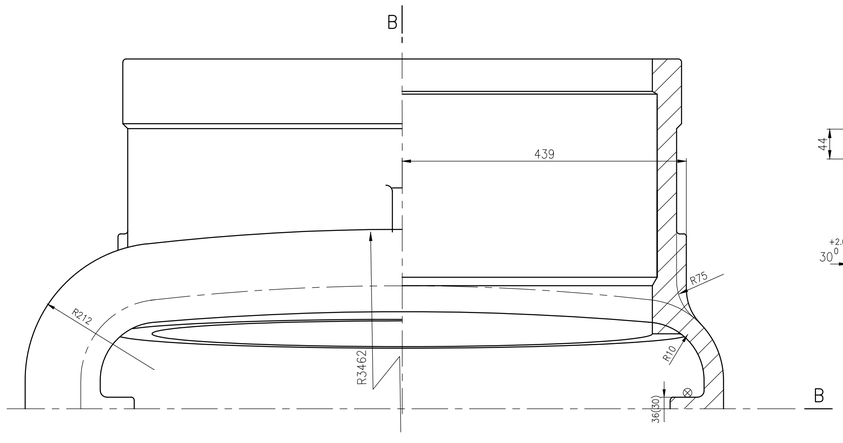


## SECTION XX

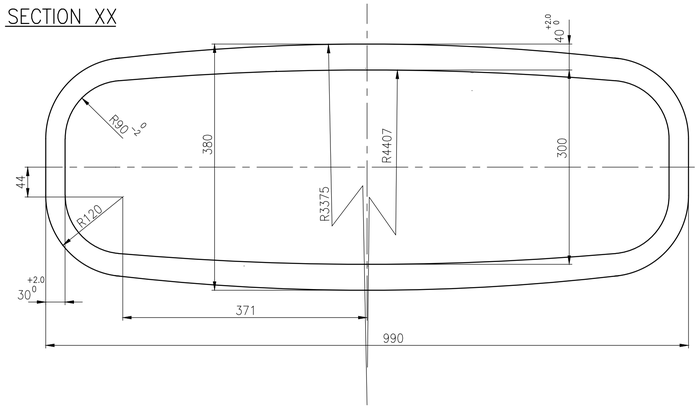


## NOTES

1. NECESSARY MACHINING ALLOWANCES HAVE BEEN ADDED ON ALL MACHINABLE SURFACES.
2. ⊗ THIS MARK INDICATES THE SURFACES TO BE MACHINED.
3. UNSPECIFIED CASTING RADII–R5 MAX.
4. FOR PERMISSIBLE DIMENSIONAL DEVIATIONS OF NON TOLERANCED CASTING DIMENSIONS REFER LATEST APPLICABLE QUALITY PROCEDURE.
5. CASTING SHALL GENERALLY COMPLY WITH THE REQUIREMENTS OF LATEST APPLICABLE QUALITY PROCEDURE IN ALL RESPECTS.
6. 100/ ▽ INDICATES THE CASTING SURFACES WHICH MUST BE OF HIGH QUALITY WITHOUT SURFACE UNEVENNESS.
7. FINISH MACHINED DIMENSIONS ARE INDICATED WITHIN BRACKETS FOR INFORMATION ONLY,.
8. PUNCHING DETAILS SHALL BE MARKED ONLY ON RAISED FLAT SURFACE GIVEN AT ZONE B12.
9. HEIGHT OF CASTING LETTERS 50mm.

@ 10. QUALITY PROCEDURE AS APPLICABLE FOR SPECIAL CLASS VALVE

| | | | | | | | | | | | |
|---|---|---|---|---|---|---|---|---|---|---|---|
| @ | 150SPL | WC9 | 02 | – | – | SA217 WC9 ATTEST | NT | – | 1505 | – | 1.V.NH84.05185R/1 922032140000 | 001 |
| | 150 | WCB | 01 | – | – | SA216 WCB ATTEST | NR | – | 1505 | – | 1–V–N929–05185R 922012190000 | 001 |
| | RATING** | MATL.MARK* | SL.No. | DESCRIPTION | MATL CODE | MATL SPECN | HEAT TREATMENT | SCRAP SORT | NET WT (kg) | GROSS WT (kg) | DRAWING No / COMPONENT CODE | ITEM No |

| REV | DATE | ALTERED | A.MARIMUTHU | REV | DATE | ALTERED | M.S |
|---|---|---|---|---|---|---|---|
| 02 | 20.08.14 | CHD & APPD | MS & SSK | 01 | 28.01.14 | CHD & APPD | SSK & KRS |
| | | NOTE–10 INCLUDED | | | | SL.No. 02 INCLUDED | |

CAUTION: The information on this document is the property of BHARAT HEAVY ELECTRICALS LTD. It must not be used directly or indirectly in any way detrimental to the interest of the company.

TYPE OF PRODUCT
OR NAME OF
CUSTOMER/PROJECT

365–119

BHARAT HEAVY ELECTRICALS LTD.,
UNIT: HIGH PRESSURE BOILER PLANT.
TIRUCHIRAPALLI–620014.

| | NAME | SIGN | DATE |
|---|---|---|---|
| DRN | V.BAIRAVAN | | 14.10.2000 |
| CHD | R.L.NARAYANAN | | 14.10.2000 |
| APPD | M.RAJAKUMAR | | 14.10.2000 |

DEPT VL | CODE 320 | SCALE N T S | WEIGHT (KG). REF.TABLE | REFERENCE INFORMATIONS CAD REF. NO:C105185R

TITLE: BODY 32"/150 CL | CARD CODE U 01 | DRAWING NO. 1–V–0000–05185R | REV 02

Size A1

TP-DG-1-V-N049-02868R
CORPORATE DRG ID

## SECTION-AA

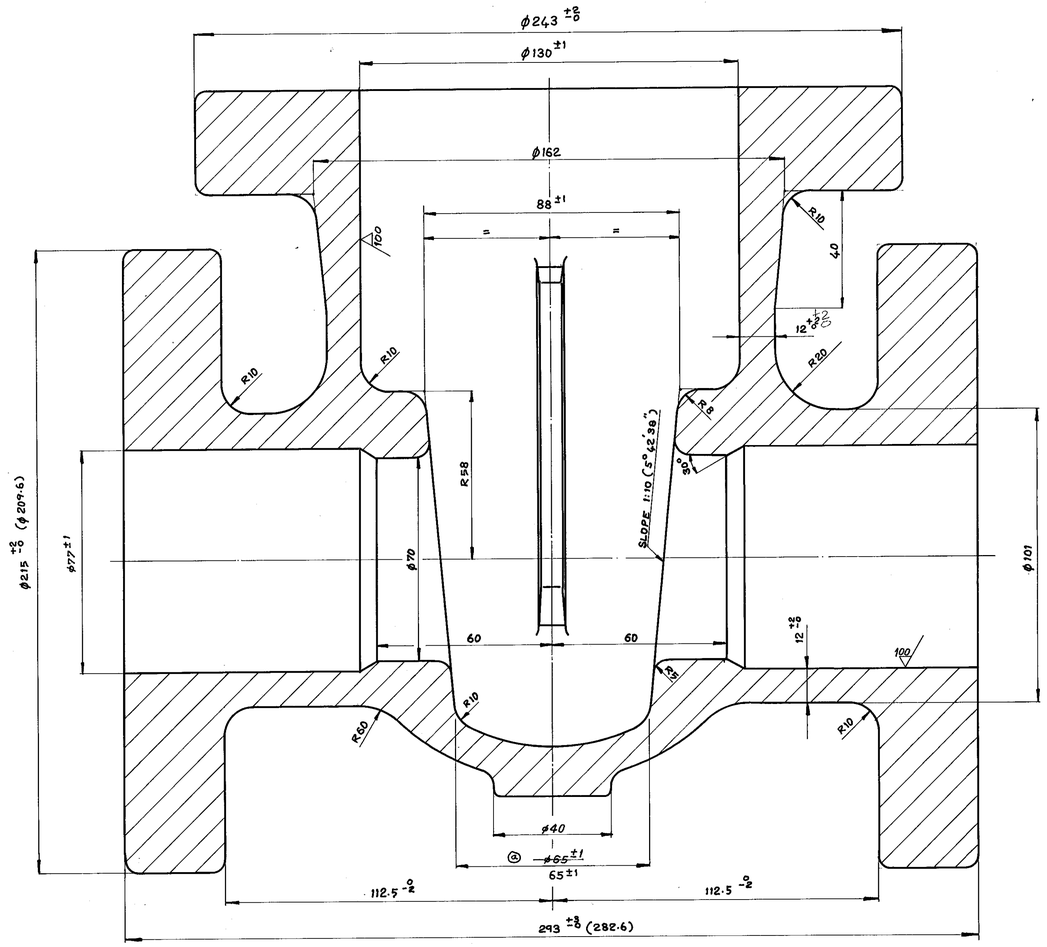


## SECTION-BB

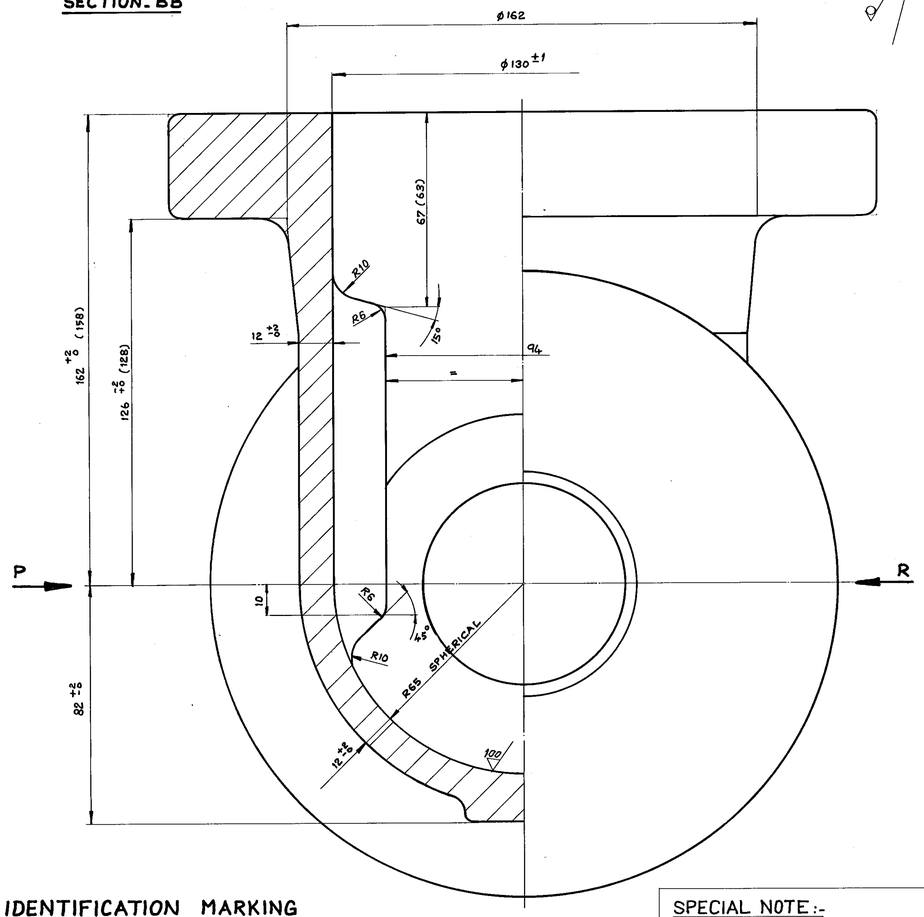


## CAST IDENTIFICATION MARKING

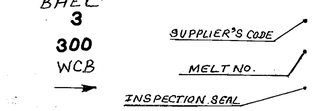


## SPECIAL NOTE:-

01. GUIDE BAR DIMENSIONS TO BE MAINTAINED WITHIN THE TOLERENCES INDICATED.

02. BOTH GUIDE RIBS TO BE COPLANAR AND TRUELY VERTICAL.

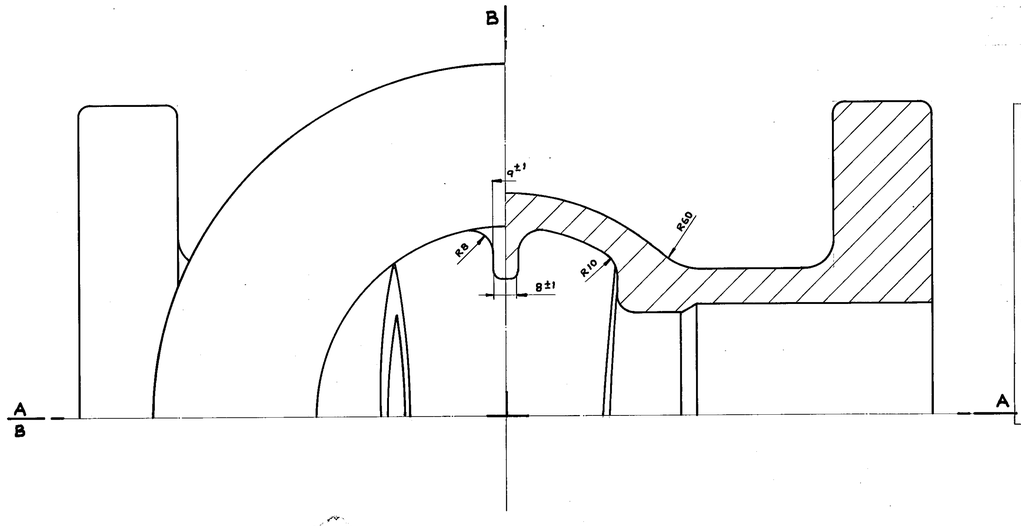


## NOTE:-

01. NECESSARY MACHINING ALLOWANCES HAVE BEEN ADDED IN THIS DRG. ON MACHINABLE SURFACES.

02. PERMISSIBLE DIMENSIONAL DEVIATIONS OF CASTING SURFACES - REFER TO CHART.

03. UNSPECIFIED CASTING RADII R3-R5.

04. 100 ▽ CASTING SURFACES MUST BE OF HIGH QUALITY WITHOUT SURFACE UNEVENNESS.

05. HEIGHT OF CASTING LETTERS 12MM.

06. ⊗ SURFACES TO BE MACHINED.

07. FINISH MACHINED DIMENSIONS ARE INDICATED WITHIN BRACKETS.

08. CASTING SHALL MEET ALL THE REQUIREMENTS OF TDC:4/101 (WITH LATEST REVISION).

09. RISER REMAINS ARE TO BE COMPLETELY REMOVED SUITABLY.

| SL.ND | CASTING DRG. ND | MATL. CODE | MATL. SPECN | MATL. MARK TO BE CAST. | APPLICABLE TYPE NOS. |
|---|---|---|---|---|---|
| 01. | 1-V-N049-02868R/02 | 92 027 038 | A216WCB - NR ATTEST | — | N049, |

**BHARAT HEAVY ELECTRICALS LTD.,**
**BOILER PLANT UNIT, TIRUCHIRAPALLI-14**

| | | | | |
|---|---|---|---|---|
| FIRST ANGLE | SCALE | DRAWN | J. PRABAKAR | TOTAL NET WT (KG) 40.0 |
| | | CHECKED | ? | TYPE |
| | | APPROVED | J.S. KUMAR | |
| ALL DIMENSIONS IN MILLIMETRES | | DATE | 08 JUNE 89 | NEW/OLD DRG. NO. |

CAUTION
THE INFORMATION CONTAINED IN THIS DRAWING IS THE PROPERTY OF BHARAT HEAVY ELECTRICALS LTD., BOILER PLANT UNIT, TIRUCHY-14 AND SHALL NOT BE USED WITHOUT THEIR EXPRESS WRITTEN PERMISSION IN ANY FORM OR PART THEREOF FOR ANY OTHER PURPOSE THAN FOR WHICH IT IS SENT TO YOU.

33-113

TITLE: BODY (3"-300 CLASS)

DRAWING NO. 1-V-N049-02868R

REVISION 02

| REV. | DATE | ALTD. BY | CHD & APPD. |
|---|---|---|---|
| 02 | 8.5.96 | | |

HYD. TEST PR. NOTE DELETED. REFER DCN C80579

| REV. | DATE | ALTERED | CHECKED |
|---|---|---|---|
| 1 | 16 0190 | J.P | J.K |

ZONE ⊗

DIMENSION ϕ65 ±1 CHANGED AS 65 ±1

TP-DG-1-V-N049-02868R
CORPORATE DRG ID

DRAWING NO. 2-V-0000-05934R

ALL DIMENSIONS ARE IN MILLIMETRES. FOR TOLERANCES OF UNTOLERANCED DIMENSIONS DURING MANUFACTURE REFER RELEVANT QCP / QP

## SECTION-AA

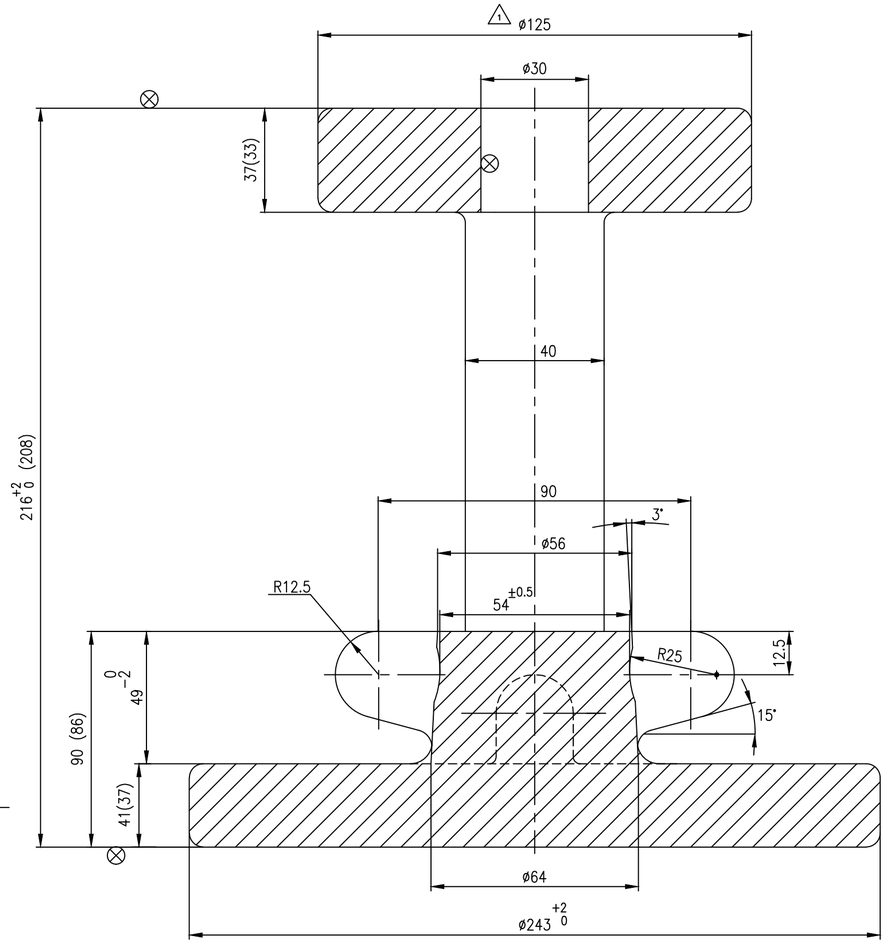


## SECTION-BB

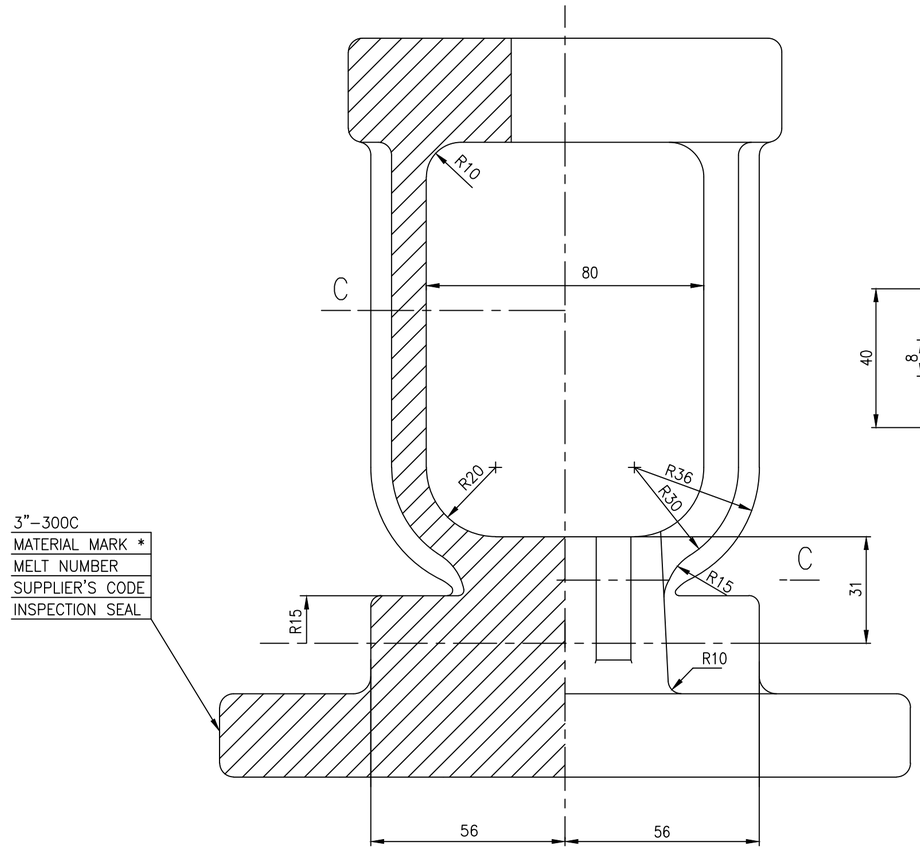


## SECTION-CC

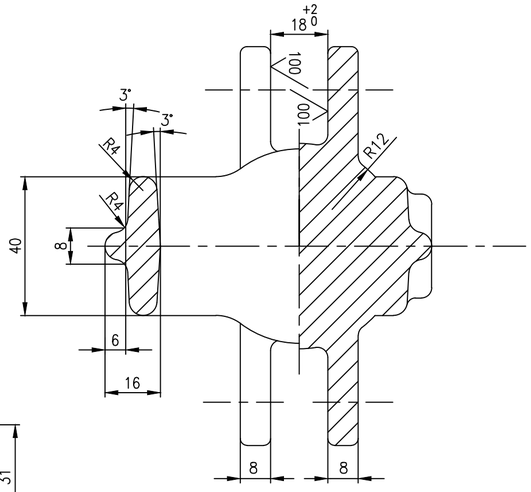


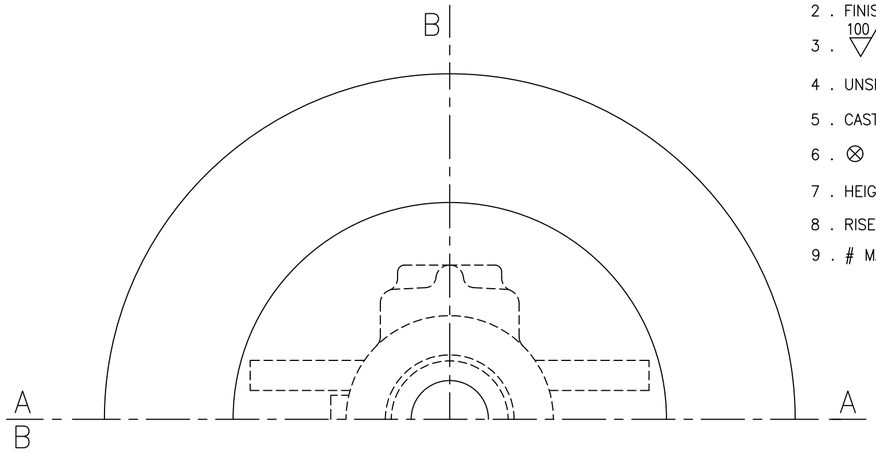


## NOTES:

1. NECESSARY MACHINING ALLOWANCES HAVE BEEN ADDED ON ALL MACHINABLE SURFACES
2. FINISHED MACHINED DIMENSIONS ARE INDICATED WITHIN BRACKETS FOR INFORMATION
3. 100 CASTING SURFACES MUST BE HIGH QUALITY WITHOUT SURFACE UNEVENNESS
4. UNSPECIFIED CASTING RADII 3 – 5 MM
5. CASTING SHALL COMPLY WITH THE REQUIREMENTS OF APPLICABLE TDC WITH LATEST REVISOIN.
6. ⊗ SURFACES TO BE MACHINED
7. HEIGHT OF CAST LETTERS 12 MM
8. RISER REMAINS ARE TO BE COMPLETELY REMOVED SUITABLY.
9. # MARKED ITEMS IGC TEST SHALL BE CONDUCTED.

| SL No | MATL. MARK * TO BE CAST | MATL CODE | MATL SPECN | HEAT TREATMENT | SCRAP SORT | NET WT (kg) | GROSS WT (kg) | DRAWING No | ITEM No |
|---|---|---|---|---|---|---|---|---|---|
| 08 | A351 CF3M | 92 203 863 | A351 CF3M CERTIFY | SH | -- | -- | -- | 2.V.NK62.05934R/00 | -- |
| # 07 | A351 CF8 | 92 203 555 | A351 CF8 CERTIFY | SH | -- | -- | -- | 2.V.U637.05934R/00 | -- |
| 06 | A351 CF8 | 92 200 561 | A351 CF8 CERTIFY | SH | -- | -- | -- | 2.V.N364.05934R/02 | -- |
| 05 | A351 CF8M | 92 200 560 | A351 CF8M CERTIFY | SH | -- | -- | -- | 2.V.N373.05934R/02 | -- |
| 04 | A217 WC9 | 92 200 559 | A217 WC9 CERTIFY | N & T | -- | -- | -- | 2.V.N381.05934R/02 | -- |
| 03 | A217 WC6 | 92 200 558 | A217 WC6 CERTIFY | N & T | -- | -- | -- | 2.V.N380.05934R/02 | -- |
| 02 | A216 WCC | 92 200 557 | A216 WCC CERTIFY | NORMALISED | -- | -- | -- | 2.V.N379.05934R/02 | -- |
| 01 | A216 WCB | 92 200 357 | A216 WCB CERTIFY | NORMALISED | -- | -- | -- | 2.V.N326.05934R/02 | -- |

| REV | DATE | ALTERED | |
|---|---|---|---|
| 06 | 31.05.19 | R.P.SINGH | CHD & APPD SSK & KRS |
| | SL. No. 08 INCLUDED | | |
| 05 | 08.05.18 | R.P.SINGH | CHD & APPD SSK & KRS |
| | SL. No. 07 INCLUDED | | |
| 04 | 09.06.12 | T.R.RAMAMURTHY | CHD & APPD SSK & KRS |
| | IN SECTION-CC DIMN.16 +2 0 DELETED<br>REFER DCP.801337 | | |
| 03 | 22.12.97 | T.R.RAMAMURTHY | CHD & APPD K.S.RAMAN |
| ZONE | IN STUFFING BOX ZONE R25 & 54±0.5 INCLUDED. IN SECTION-CC DIMN. 6 WAS 10<br>REFER DCN. CS:0814 | | |

CAUTION: The information on this document is the property of BHARAT HEAVY ELECTRICALS LTD. It must not be used directly or indirectly in any way detrimental to the interest of the company.

TYPE OF PRODUCT OR NAME OF CUSTOMER/PROJECT: CS

DRAWING REDRAWN WITH REV. 04 ON 09.06.2012

BHARAT HEAVY ELECTRICALS LTD.,
UNIT: HIGH PRESSURE BOILER PLANT.
TIRUCHIRAPALLI -620014.
365-120

| | NAME | SIGN | DATE | NO.OF VAR. |
|---|---|---|---|---|
| DRN | K.P.LEON | | 26.03.96 | |
| CHD | N.DHANAPAL | | 26.03.96 | |
| APPD | A.VISWANATHAN | | 26.03.96 | |

DEPT VL
CODE 320
SCALE NTS
WEIGHT (KG). 20.2
REFERENCE INFORMATIONS: CAD REF: C205934R
NO. OF ITEMS

TITLE: YOKE COVER (3"-300C GV HW)
CARD CODE: U 01
DRAWING NO. 2-V-0000-05934R
REV 06

Size A2

DRAWING NO. 2-V-0000-06107R

ALL DIMENSIONS ARE IN MILLIMETRES. FOR TOLERANCES OF UNTOLERANCED DIMENSIONS DURING MANUFACTURE REFER RELEVANT QCP / QP

## SECTION-AA

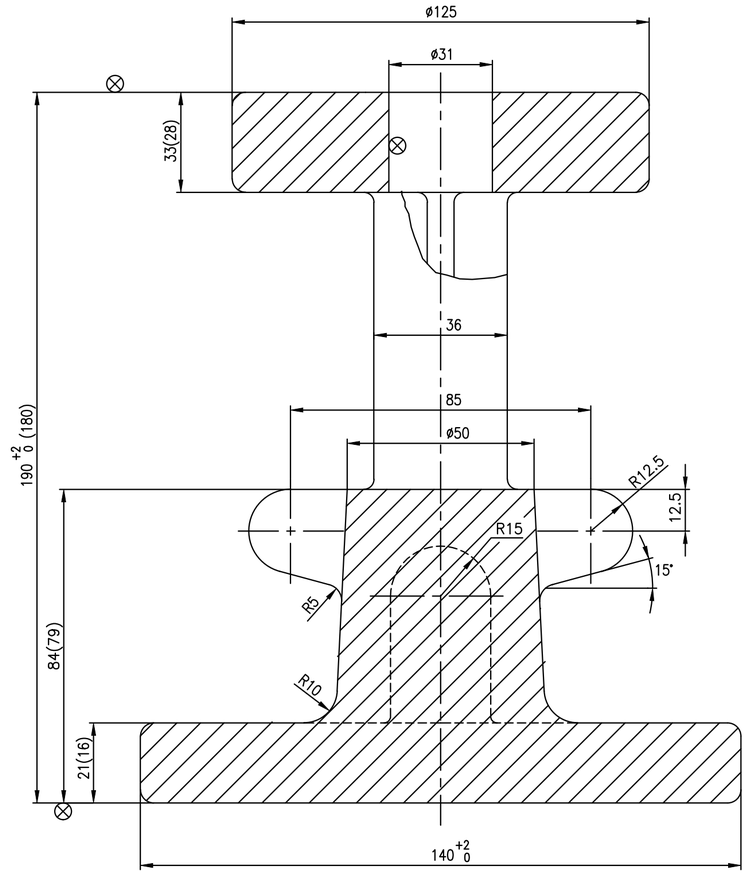


## SECTION-BB

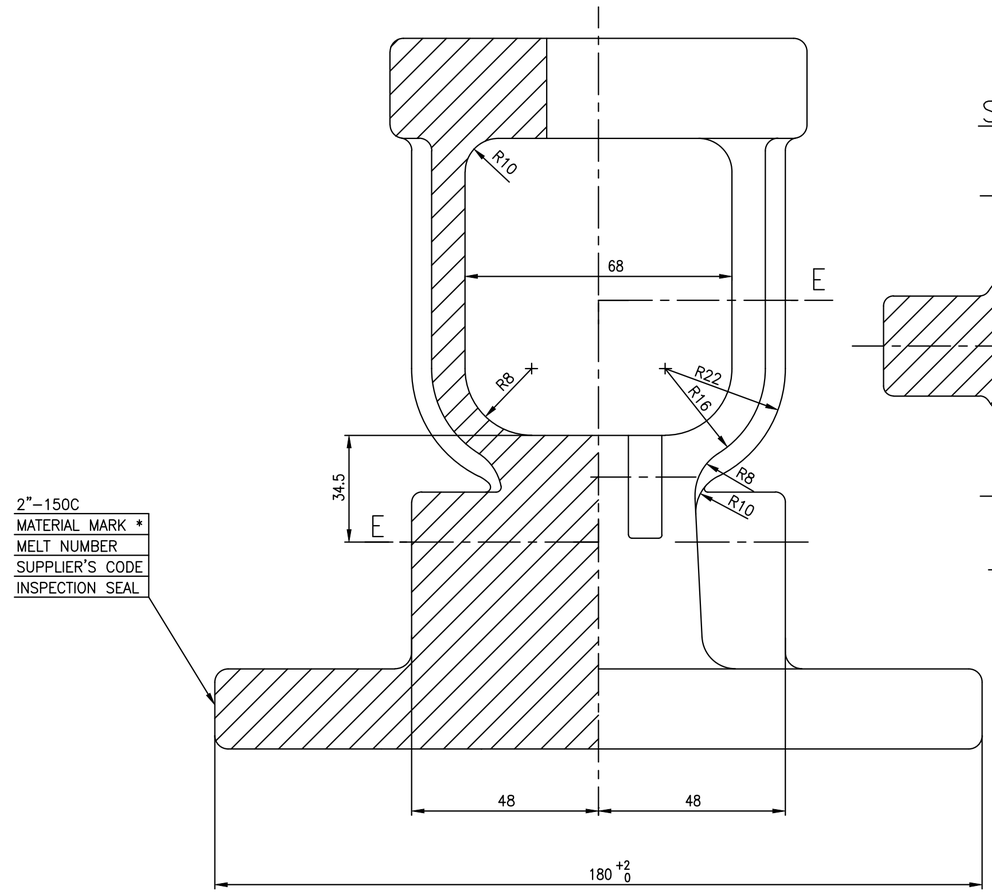


## SECTION-EE

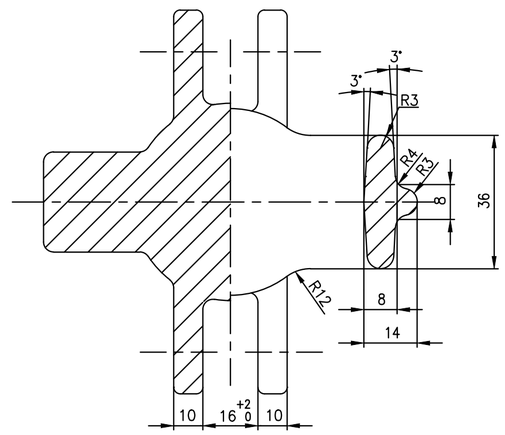


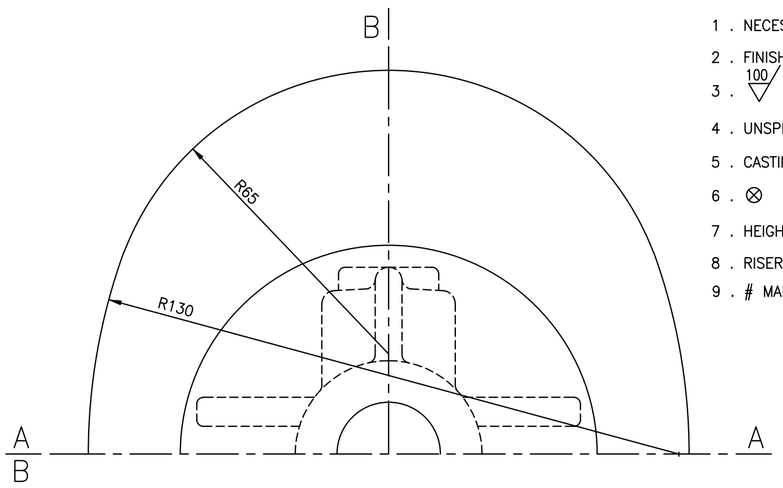


## NOTES:

1. NECESSARY MACHINING ALLOWANCES HAVE BEEN ADDED ON ALL MACHINABLE SURFACES
2. FINISHED MACHINED DIMENSIONS ARE INDICATED WITHIN BRACKETS FOR INFORMATION
3. 100 CASTING SURFACES MUST BE HIGH QUALITY WITHOUT SURFACE UNEVENNESS
4. UNSPECIFIED CASTING RADII 3 – 5 MM
5. CASTING SHALL COMPLY WITH THE REQUIREMENTS OF LATEST QUALITY PROCEDURE.
6. ⊗ SURFACES TO BE MACHINED
7. HEIGHT OF CAST LETTERS 12 MM
8. RISER REMAINS ARE TO BE COMPLETELY REMOVED SUITABLY.
9. # MARKED ITEMS IGC TEST SHALL BE CONDUCTED.

| SL. No. | DESCRIPTION* | MATL CODE | MATL SPECN | HEAT TREATMENT | SCRAP SORT | NET WT (kg) | GROSS WT (kg) | DRAWING No / COMPONENT CODE | ITEM No |
|---|---|---|---|---|---|---|---|---|---|
| # 07 | CF8 | 92 203 553 | A351 CF8 CERTIFY | SH | 46 | -- | -- | 2.V.U634.06107R | 05 |
| 06 | CF8M | 92 200 581 | A351 CF8M CERTIFY | SH | 46 | -- | -- | 2.V.N472.06107R/01 | 05 |
| 05 | CF8 | 92 200 580 | A351 CF8 CERTIFY | SH | 46 | -- | -- | 2.V.N277.06107R/01 | 05 |
| 04 | WC9 | 92 200 509 | A217 WC9 CERTIFY | N & T | 20 | -- | -- | 2.V.N301.06107R/01 | 05 |
| 03 | WC6 | 92 200 508 | A217 WC6 CERTIFY | N & T | 20 | -- | -- | 2.V.N300.06107R/01 | 05 |
| 02 | WCC | 92 200 507 | A216 WCC CERTIFY | NORMALISED | 10 | -- | -- | 2.V.N299.06107R/01 | 05 |
| 01 | WCB | 92 200 506 | A216 WCB CERTIFY | NORMALISED | 10 | -- | -- | 2.V.N298.06107R/01 | 05 |

| REV | DATE | ALTERED | |
|---|---|---|---|
| 03 | 07.05.18 | R.P.SINGH | CHD & APPD SSK & KRS |

SL.No. 07 INCLUDED.

| REV | DATE | ALTERED | |
|---|---|---|---|
| 02 | 28.04.97 | N.DHANAPAL | CHD & APPD A.VISWANATHAN |

DIMENSION 84(79) CORRECTLY INDICATAD

REFER DCN.CS:0694

| REV | DATE | ALTERED | |
|---|---|---|---|
| 01 | 01.04.96 | T.R.RAMAMURTHY. | CHD & APPD A.VISWANATHAN |

ZONE

SL.No. 05 & 06 INCLUDED.

CAUTION: The information on this document is the property of BHARAT HEAVY ELECTRICALS LTD. It must not be used directly or indirectly in any way detrimental to the interest of the company.

TYPE OF PRODUCT
OR NAME OF
CUSTOMER/PROJECT

BHARAT HEAVY ELECTRICALS LTD.,
UNIT: HIGH PRESSURE BOILER PLANT.
TIRUCHIRAPALLI -620014.
365-120

| | NAME | SIGN | DATE | NO.OF VAR. |
|---|---|---|---|---|
| DRN | K.P.LEON | | 06.01.96 | |
| CHD | N.DHANAPAL | | 06.01.96 | |
| APPD | A.VISWANATHAN | | 08.01.96 | |

DEPT VL
CODE 320
SCALE NTS
WEIGHT (KG). 8.63
REFERENCE INFORMATIONS
CAD REF: C206107R
NO. OF ITEMS

TITLE
YOKE COVER
(2"-150C GV SG)

CARD CODE U 01

DRAWING NO. 2-V-0000-06107R

REV 03

Size A2

DRAWING NO. 2-V-0000-08052R

ALL DIMENSIONS ARE IN MILLIMETRES. FOR TOLERANCES OF UNTOLERANCED DIMENSIONS DURING MANUFACTURE REFER RELEVANT QCP / QP

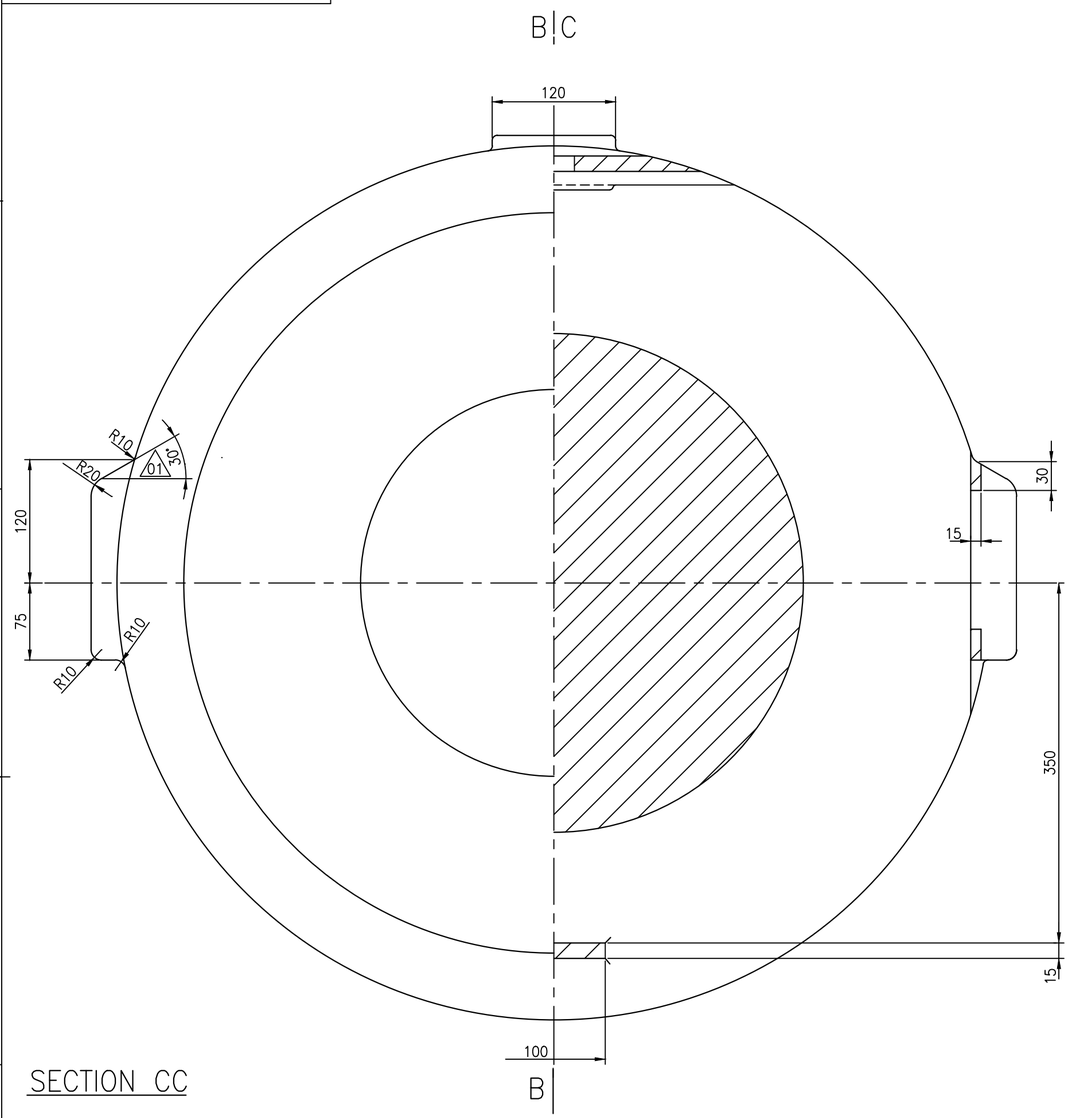


SECTION CC

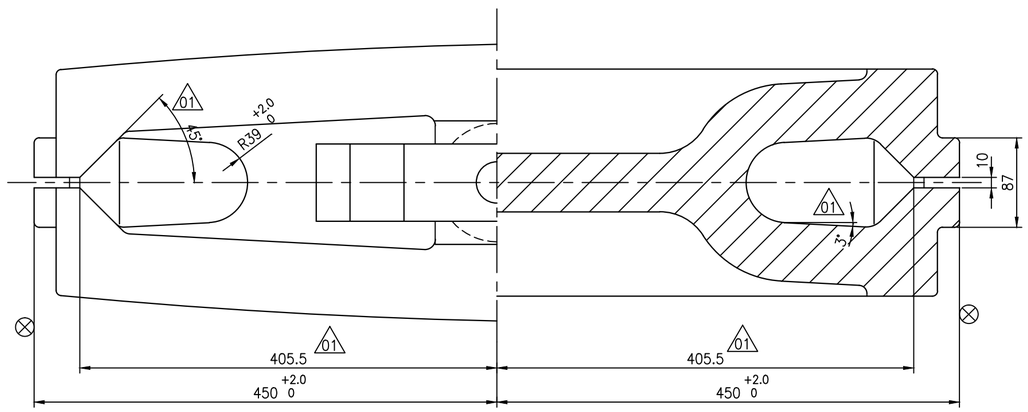


SECTION BB

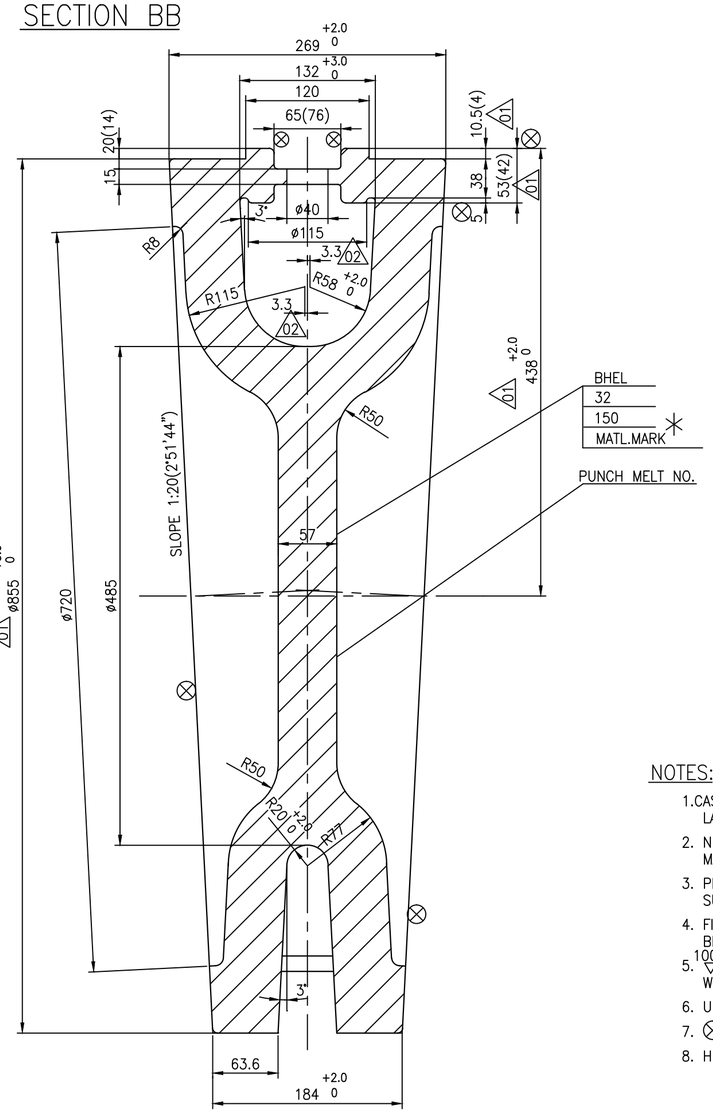


NOTES:

1. CASTING SHALL COMPLY WITH THE REQUIREMENT OF LATEST APPLICABLE QUALITY PROCEDURE IN ALL RESPECTS.
2. NECESSARY ALLOWANCES HAVE BEEN ADDED ON ALL MACHINABLE SURFACES.
3. PERMISSIBLE DIMENSIONAL DEVIATIONS OF CASTING SURFACES REFER LATEST APPLICABLE QUALITY PROCEDURE
4. FINISH MACHINED DIMENSIONS ARE INDICATED WITHIN BRACKETS FOR REFERENCE ONLY.
5. 100/ CASTING SURFACES MUST BE OF HIGH QUALITY WITHOUT SURFACE UNEVENNESS.
6. UNSPECIFIED CASTING RADII 3–5mm.
7. ⊗ SURFACE TO BE MACHINED.
8. HEIGHT OF CASTING LETTERS 20mm.

| REV | DATE | ALTERED | |
|---|---|---|---|
| 03 | 28.01.14 | CHD & APPD | M.S SSK & KRS |
| ZONE | SL.No. 02 INCLUDED | | |
| REV | DATE | ALTERED | |
| 02 | 22.06.00 | CHD & APPD | R.L M.R.K |
| ZONE | DIM 3.3 INCLUDED<br>DCN NO. HM 0452 | | |
| REV | DATE | ALTERED | |
| 01 | 20.10.99 | CHD & APPD | R.L M.R.K |
| ZONE | DIMS ø855 +3 0, 438 +2 0, 10.5(4) & 53.5 WERE ø850, 435, 10 & 53 RESP.<br>DIMS 405.5, 45°, 3° & 30° INCLUDED<br>DCN NO, HM 0409 | | |

| MATL.MARK | SL No. | DESCRIPTION | MATL CODE | MATL SPECN | HEAT TREATMENT | SCRAP SORT | NET WT (kg) | GROSS WT (kg) | DRAWING No / COMPONENT CODE | ITEM No |
|---|---|---|---|---|---|---|---|---|---|---|
| WC9 | 02 | – | – | A217 WC9 ATTEST | NT | – | – | 480 | 2-V-NH84-08052R / 922032150000 | – |
| WCB | 01 | – | – | A216 WCB CERTIFY | NR | – | – | 480 | 2-V-N827-08052R/2 / 922010770000 | – |

CAUTION: The information on this document is the property of BHARAT HEAVY ELECTRICALS LTD. It must not be used directly or indirectly in any way detrimental to the interest of the company.

TYPE OF PRODUCT
OR NAME OF
CUSTOMER/PROJECT

BHARAT HEAVY ELECTRICALS LTD.,
UNIT: HIGH PRESSURE BOILER PLANT.
TIRUCHIRAPALLI -620014.
365-120

| | NAME | SIGN | DATE | NO.OF VAR. |
|---|---|---|---|---|
| DRN | V.BAIRAVAN | | 24.06.99 | |
| CHD | R.L.NARAYANAN | | 24.06.99 | |
| APPD | M.RAJAKUMAR | | 24.06.99 | |

| DEPT | CODE | SCALE | WEIGHT (KG). | REFERENCE INFORMATIONS | NO. OF ITEMS |
|---|---|---|---|---|---|
| VL | 320 | N T S | – | | |

| TITLE | CARD CODE | DRAWING NO. | REV |
|---|---|---|---|
| WEDGE 32"/150C GV | U 01 | 2-V-0000-08052R | 03 |

Size A2

DRAWING NO. 2-V-0000-08295R

ALL DIMENSIONS ARE IN MILLIMETRES. FOR TOLERANCES OF UNTOLERANCED DIMENSIONS DURING MANUFACTURE REFER RELEVANT QCP / QP

## SECTION AA

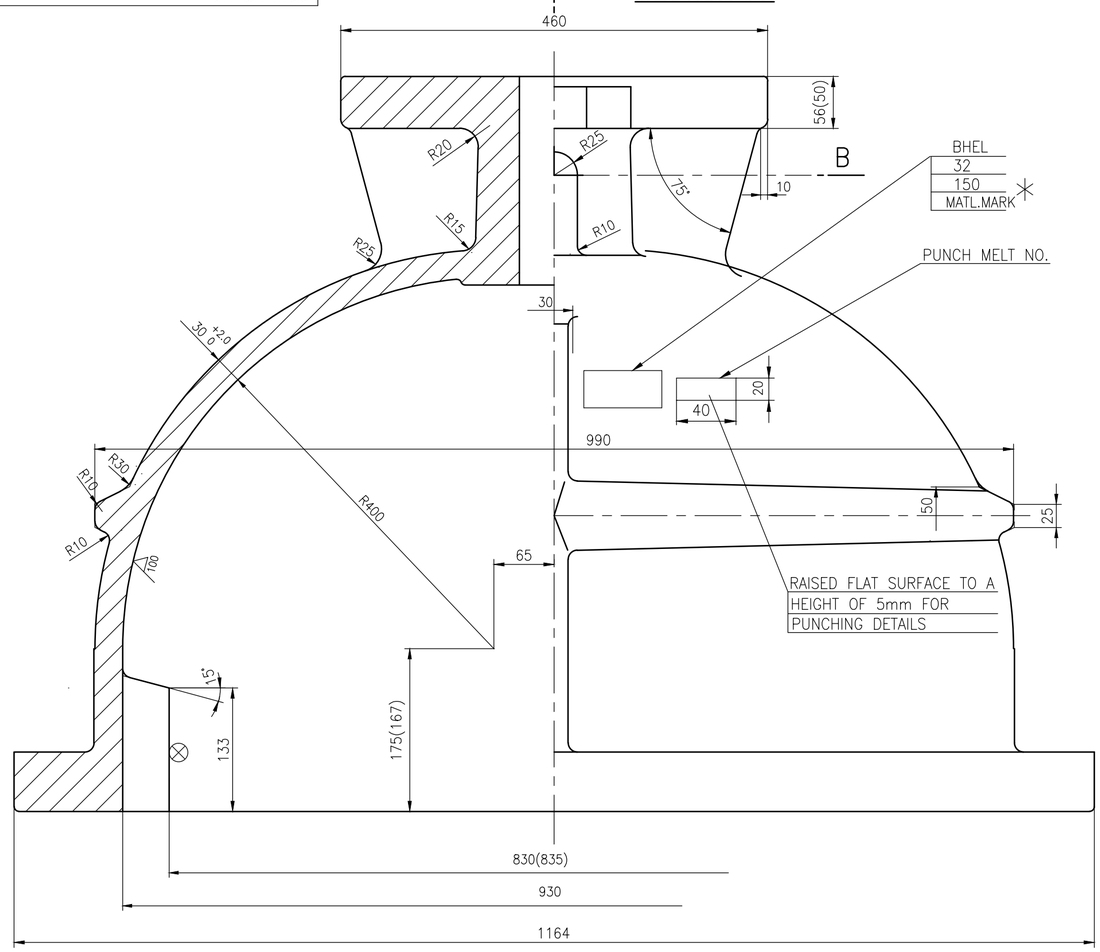


## SECTION CC

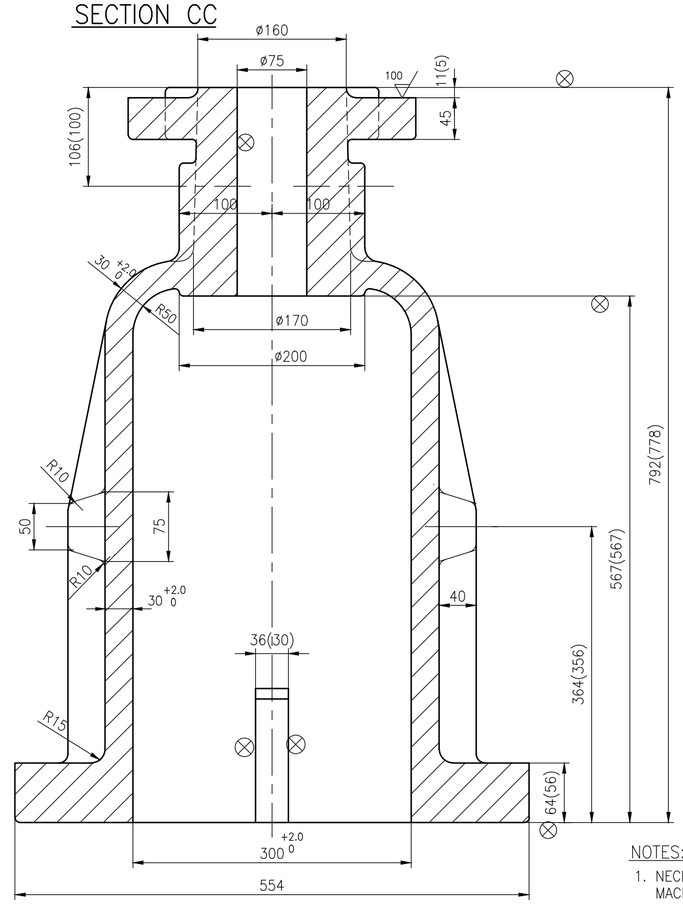


NOTES:

1. NECESSARY ALLOWANCES HAVE BEEN ADDED ON ALL MACHINABLE SURFACES.
2. FOR PERMISSIBLE DIMENSIONAL DEVIATIONS OF NON TOLERANCED LATEST DIMENSIONS REFER LATEST APPLICABLE QUALITY WORK INSTRUCTIONS
3. FINISH MACHINED DIMENSIONS ARE INDICATED WITHIN BRACKETS FOR INFORMATION ONLY.
4. 100/▽ INDICATES THE CASTINGSURFACES MUST BE OF HIGH QUALITY WITHOUT SURFACE UNEVENNESS.
5. UNSPECIFIED CASTING RADII R5 MAX..
6. ⊗ THIS MARK INDICATES THE SURFACES TO BE MACHINED.
7. HEIGHT OF CASTING LETTERS 20mm.
8. CASTING SHALL COMPLY WITH THE REQUIREMENTS OF LATEST APPLICABLE QUALITY WORK INSTRUCTIONS PROCEDURE IN ALL RESPECTS.

## SECTION BB

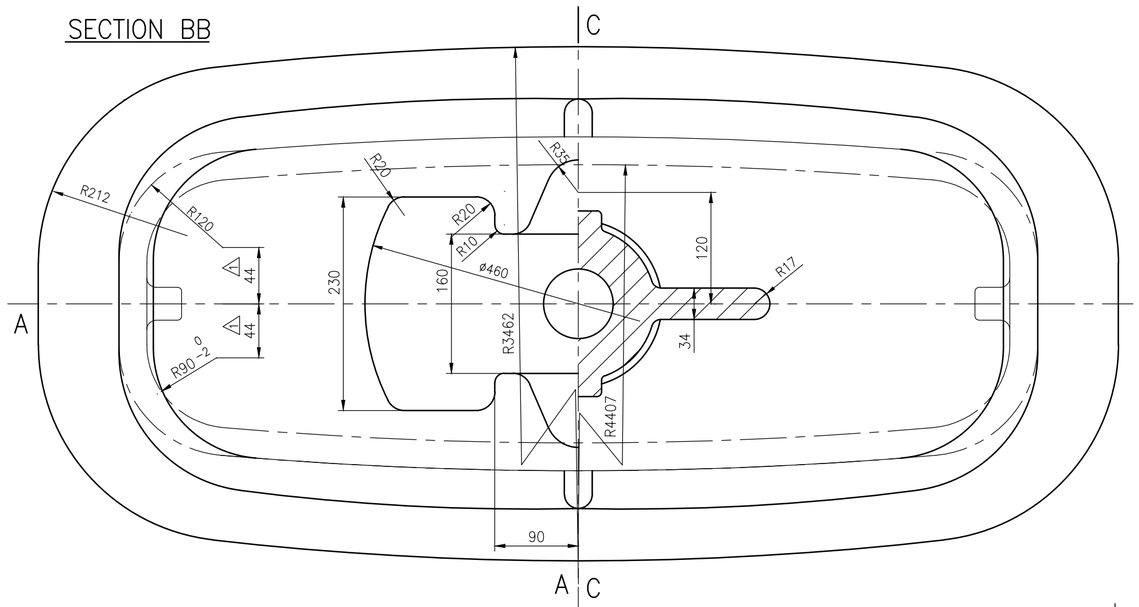


| REV | DATE | ALTERED | |
|---|---|---|---|
| 03 | 18.11.14 | ALTERED | M.RAMESH |
| | | CHD & APPD | SSK & KRS |
| | | DWG UPDATDED | |
| 02 | 29.01.14 | ALTERED | RAVINDHAR |
| | | CHD & APPD | SSK & KRS |
| ZONE | | SL.No. 02 INCLUDED | |
| 01 | 17.03.09 | ALTERED | VB |
| | | CHD & APPD | MRK |
| ZONE | | DIMENSION 44 WAS 60.7 | |
| | | DCP No.800932 | |

| MATL.MARK | SL. No. | DESCRIPTION | MATL CODE | MATL SPECN | HEAT TREATMENT | SCRAP SORT | NET WT (kg) | GROSS WT (kg) | DRAWING No / COMPONENT CODE | ITEM No |
|---|---|---|---|---|---|---|---|---|---|---|
| WC9 | 02 | – | – | A217 WC9 ATTEST | NT | – | – | 62.5 | 2-V-NH84-08295R / 922032160000 | – |
| WCB | 01 | – | – | ASTM A216-WCB,CERTIFY | NR | – | – | 62.5 | 2-V-N929-08295R/1 / 922012200000 | – |

CAUTION: The information on this document is the property of BHARAT HEAVY ELECTRICALS LTD. It must not be used directly or indirectly in any way detrimental to the interest of the company.

TYPE OF PRODUCT OR NAME OF CUSTOMER/PROJECT: REDRAWN WITH REV.1 ON 17.03.09

BHARAT HEAVY ELECTRICALS LTD.,
UNIT: HIGH PRESSURE BOILER PLANT.
TIRUCHIRAPALLI -620014.
365-120

| | NAME | SIGN | DATE | NO.OF VAR. |
|---|---|---|---|---|
| DRN | V.BAIRAVAN | | 17.03.09 | |
| CHD | R.L.NARAYANAN | | 17.03.09 | |
| APPD | M.RAJAKUMAR | | 17.03.09 | |

DEPT VL | CODE 320 | SCALE N T S | WEIGHT (KG). | REFERENCE INFORMATIONS | NO. OF ITEMS

TITLE: BONNET 32"/150 GV | CARD CODE U 01 | DRAWING NO. 2-V-0000-08295R | REV 03

Size A2

DRAWING NO. 2-V-0000-08454P

ALL DIMENSIONS ARE IN MILLIMETRES. FOR TOLERANCES OF UNTOLERANCED DIMENSIONS DURING MANUFACTURE REFER RELEVANT QCP / QP

| SL. No. | DRAWING NUMBER | MATL.SPECN. | MATL. MARK | MATERIAL CODE | Wt.(kg) | DIMENSIONS ØD | DIMENSIONS Ød | DIMENSIONS T | APPLICABLE VALVES |
|---|---|---|---|---|---|---|---|---|---|
| 01 | 2-V-N025-08454P | A216 WCB NR, CERTIFY | WCB | 92 201 312 | 0.62 | 98 | 70 | 23 | 3"-150C-GV |
| 02 | 2-V-N033-08454P | A216 WCB NR, CERTIFY | WCB | 92 201 310 | 1.06 | 132 | 94 | 20 | 4"-300C-GV |
| 03 | 2-V-N001-08454P | A216 WCB NR, CERTIFY | WCB | 92 201 307 | 1.90 | 178 | 145 | 30 | 6"-150C-GV |
| 04 | 2-V-N009-08454P | A216 WCB NR, CERTIFY | WCB | 92 201 308 | 2.70 | 232 | 195 | 29 | 8"-150C-GV |
| 05 | 2-V-N057-08454P | A216 WCB NR, CERTIFY | WCB | 92 201 313 | 3.63 | 286 | 246 | 29 | 10"-150C-GV |
| 06 | 2-V-N041-08454P | A216 WCB NR, CERTIFY | WCB | 92 201 311 | 4.40 | 338 | 297 | 29 | 12"-150C-GV |
| 07 | 2-V-N017-08454P | A216 WCB NR, CERTIFY | WCB | 92 201 309 | 2.50 | 188 | 145 | 30 | 6"-300C-GV |
| 08 | 2-V-N089-08454P | A216 WCB NR, CERTIFY | WCB | 92 201 315 | 3.5 | 242 | 195 | 29 | 8"-300C-GV |
| 09 | 2-V-N065-08454P | A216 WCB NR, CERTIFY | WCB | 92 201 314 | 5.24 | 302 | 246 | 29 | 10"-300C-GV |
| 10 | 2-V-N105-08454P | A216 WCB NR, CERTIFY | WCB | 92 201 317 | 5.60 | 348 | 297 | 29 | 12"-300C-GV |
| 11 | 2-V-N297-08454P | A217 WC9 NT, CERTIFY | WC9 | 92 201 328 | 1.06 | 132 | 94 | 20 | 4"-300C-GV |
| 12 | 2-V-N306-08454P | A217 WC9 NT, CERTIFY | WC9 | 92 201 326 | 1.9 | 178 | 145 | 30 | 6"-150C-GV |
| 13 | 2-V-N274-08454P | A217 WC9 NT, CERTIFY | WC9 | 92 201 329 | 2.70 | 232 | 195 | 29 | 8"-150C-GV |
| 14 | 2-V-N305-08454P | A217 WC9 NT, CERTIFY | WC9 | 92 201 325 | 3.63 | 286 | 246 | 29 | 10"-150C-GV |
| 15 | 2-V-N258-08454P | A217 WC9 NT, CERTIFY | WC9 | 92 201 327 | 0.62 | 98 | 70 | 23 | 3"-300C-GV |
| 16 | 2-V-N229-08454P | A217 WC9 NT, CERTIFY | WC9 | 92 201 319 | 2.5 | 188 | 145 | 30 | 6"-300C-GV |
| 17 | 2-V-N230-08454P | A217 WC9 NT, CERTIFY | WC9 | 92 201 320 | 3.5 | 242 | 195 | 29 | 8"-300C-GV |
| 18 | 2-V-N304-08454P | A217 WC9 NT, CERTIFY | WC9 | 92 201 324 | 5.24 | 302 | 246 | 29 | 10"-300C-GV |
| 19 | 2-V-N309-08454P | A217 WC9 NT, CERTIFY | WC9 | 92 201 323 | 5.60 | 348 | 297 | 29 | 12"-300C-GV |
| 20 | 2-V-F502-08454P | A216 WCB NR, CERTIFY | WCB | 92 201 330 | 0.98 | 102 | 60 | 27 | 3"-600C-GV |
| 21 | 2-V-F532-08454P | A217 WC9 NT, CERTIFY | WC9 | 92 201 331 | 0.98 | 102 | 60 | 27 | 3"-600C-GV |
| 22 | 2-V-F503-08454P | A216 WCB NR, CERTIFY | WCB | 92 201 332 | 1.67 | 130 | 86 | 30 | 4"-600C-GV |
| 23 | 2-V-F533-08454P | A217 WC9 NT, CERTIFY | WC9 | 92 201 333 | 1.67 | 130 | 86 | 30 | 4"-600C-GV |
| 24 | 2-V-F504-08454P | A216 WCB NR, CERTIFY | WCB | 92 201 334 | 3.8 | 184 | 136 | 42 | 6"-600C-GV |
| 25 | 2-V-F534-08454P | A217 WC9 NT, CERTIFY | WC9 | 92 201 335 | 3.8 | 184 | 136 | 42 | 6"-600C-GV |
| 26 | 2-V-F505-08454P | A216 WCB NR, CERTIFY | WCB | 92 201 336 | 5.88 | 232 | 184 | 50 | 8"-600C-GV |
| 27 | 2-V-F535-08454P | A217 WC9 NT, CERTIFY | WC9 | 92 201 337 | 5.88 | 232 | 184 | 50 | 8"-600C-GV |
| 28 | 2-V-F506-08454P | A216 WCB NR, CERTIFY | WCB | 92 201 338 | 7.0 | 284 | 232 | 44 | 10"-600C-GV |
| 29 | 2-V-F536-08454P | A217 WC9 NT, CERTIFY | WC9 | 92 201 339 | 7.0 | 284 | 232 | 44 | 10-600C-GV |
| 30 | 2-V-F507-08454P | A216 WCB NR, CERTIFY | WCB | 92 201 340 | 8.7 | 336 | 284 | 46 | 12"-600C-GV |
| 31 | 2-V-F537-08454P | A217 WC9 NT, CERTIFY | WC9 | 92 201 341 | 8.7 | 336 | 284 | 46 | 12"-600C-GV |
| 32 | 2-V-N316-08454P | A216 WCB NR, CERTIFY | WCB | 92 201 348 | 10.6 | 390 | 325 | 38 | 14"-150C-GV |
| 33 | 2-V-N350-08454P | A216 WCB NR, CERTIFY | WCB | 92 201 349 | 10.3 | 431 | 375 | 38 | 16"-150C-GV |
| 34 | 2-V-N575-08454P | A216 WCB NR, CERTIFY | WCB | 92 201 350 | 13.1 | 482 | 425 | 42 | 18"-150C-GV |
| 35 | 2-V-N224-08454P | A216 WCB NR, CERTIFY | WCB | 92 201 351 | 16.1 | 535 | 475 | 44 | 20"-150C-GV |
| 36 | 2-V-N799-08454P | A216 WCB NR, CERTIFY | WCB | 92 201 352 | 21.1 | 640 | 575 | 44 | 24"-150C-GV |
| 37 | 2-V-N435-08454P | A216 WCB NR, CERTIFY | WCB | 92 201 353 | 7.9 | 371 | 321 | 38 | 14"-300C-GV |
| 38 | 2-V-N436-08454P | A216 WCB NR, CERTIFY | WCB | 92 201 354 | 12.5 | 425 | 371 | 48 | 16"-300C-GV |
| 39 | 2-V-N437-08454P | A216 WCB NR, CERTIFY | WCB | 92 201 355 | 17.3 | 525 | 465 | 48 | 20"-300C-GV |
| 40 | 2-V-K904-08454P | A217 WC9 NT, CERTIFY | WC9 | 92 201 356 | 10.6 | 390 | 325 | 38 | 14"-150C-GV |
| 41 | 2-V-K905-08454P | A217 WC9 NT, CERTIFY | WC9 | 92 201 357 | 10.3 | 431 | 375 | 38 | 16"-150C-GV |
| 42 | 2-V-K906-08454P | A217 WC9 NT, CERTIFY | WC9 | 92 201 358 | 13.1 | 482 | 425 | 42 | 18"-150C-GV |
| 43 | 2-V-K907-08454P | A217 WC9 NT, CERTIFY | WC9 | 92 201 359 | 16.1 | 535 | 475 | 44 | 20"-150C-GV |
| 44 | 2-V-K908-08454P | A217 WC9 NT, CERTIFY | WC9 | 92 201 360 | 21.1 | 640 | 575 | 44 | 24"-150C-GV |
| 45 | 2-V-N622-08454P | A217 WC9 NT, CERTIFY | WC9 | 92 201 361 | 7.9 | 371 | 321 | 38 | 14"-300C-GV |
| 46 | 2-V-N616-08454P | A217 WC9 NT, CERTIFY | WC9 | 92 201 362 | 12.5 | 425 | 371 | 48 | 16"-300C-GV |
| 47 | 2-V-K909-08454P | A217 WC9 NT, CERTIFY | WC9 | 92 201 363 | 17.3 | 525 | 465 | 48 | 20"-300C-GV |
| 48 | 2-V-F606-08454P | A217 CA15 NT, CERTIFY | CA15 | 92 201 443 | 7.0 | 284 | 232 | 44 | 10"-600C-GV |
| 49 | 2-V-NA60-08454P | A351 CF8 SH, CERTIFY | CF8 | 92 201 504 | 5.6 | 348 | 297 | 29 | 12"-300C-GV |
| 50 | 2-V-Z030-08454P | A351-CF8 CERTIFY | CF8 | 92 201 515 | 3.5 | 195 | 142 | 32 | 6"-300C-FV |
| 51 | 2-V-Z042-08454P | A351-CF8M CERTIFY | CF8M | 92 201 516 | 3.5 | 195 | 142 | 32 | 6"-300C-FV |
| 52 | 2-V-NE67-08454P | A351-CF8M CERTIFY | CF8M | 92 201 652 | 5.24 | 302 | 246 | 29 | 10"-300C-GV |
| 53 | 2-V-F510-08454P | A351 CF8 SH, CERTIFY | CF8 | 92 201 826 | 8.7 | 336 | 284 | 46 | 12"-600C-GV |
| 54 | 2-V-P545-08454P | A351 CF8M SH, CERTIFY | CF8M | 92 201 893 | 9.5 | 268 | 190 | 43 | 10"-300C-RV |
| 55 | 2-V-F889-08454P | A351 CF8M SH, CERTIFY | CF8M | 92 202 056 | 5.9 | 232 | 184 | 50 | 8"-600C-GV |
| 56 | 2-V-ND10-08454P | A351 CF8M SH, CERTIFY | CF8M | 92 203 145 | 1.1 | 169 | 147 | 26 | 6"-150C-GV (ECO) |
| 57 | 2-V-ND15-08454P | A351 CF8M SH, CERTIFY | CF8M | 92 203 146 | 1.8 | 223 | 198 | 28 | 8"-150C-GV (ECO) |
| 58 | 2-V-ND12-08454P | A351 CF8M SH, CERTIFY | CF8M | 92 203 129 | 2.5 | 277 | 249 | 27 | 10"-150C-GV (ECO) |
| 59 | 2-V-ND23-08454P | A351 CF8M SH, CERTIFY | CF8M | 92 203 148 | 6.8 | 335 | 299 | 30 | 12"-300C-GV (ECO) |
| 60 | 2-V-ND14-08454P | A351 CF8M SH, CERTIFY | CF8M | 92 203 149 | 1.3 | 174 | 146 | 23 | 6"-300C-GV (ECO) |
| 61 | 2-V-ND17-08454P | A351 CF8M SH, CERTIFY | CF8M | 92 203 150 | 2.1 | 228 | 198 | 26 | 8"-300C-GV (ECO) |
| 62 | 2-V-ND21-08454P | A351 CF8M SH, CERTIFY | CF8M | 92 203 151 | 3.5 | 285 | 250 | 30 | 10"-300C-GV (ECO) |
| 63 | 2-V-ND20-08454P | A217 WC9 NT, CERTIFY | WC9 | 92 203 183 | 6.8 | 335 | 299 | 30 | 12"-300C-GV (ECO) |
| 64 | 2-V-F921-08454P | A351 CF8M SH, CERTIFY | CF8M | 92 203 193 | 0.98 | 102 | 60 | 27 | 3"-600C-GV |
| 65 | 2-V-ND59-08454P | A351 CF8 SH, CERTIFY | CF8 | 92 203 298 | 3.5 | 285 | 250 | 30 | 10"-300C-GV |
| 66 | 2-V-NJ28-08454P | A351 CF8 SH, CERTIFY | CF8 | 92 203 330 | 1.8 | 223 | 198 | 28 | 8"-150C-GV (ECO) |
| 67 | 2-V-NJ29-08454P | A351 CF8 SH, CERTIFY | CF8 | 92 203 331 | 2.5 | 277 | 249 | 27 | 10"-150C-GV (ECO) |
| 68 | 2-V-ND72-08454P | A351 CF8 SH, CERTIFY | CF8 | 92 203 339 | 1.1 | 169 | 147 | 26 | 6"-150C-GV (ECO) |
| 69 | 2-V-Z094-08454P | A351 CF8M SH, CERTIFY | CF8M | 92 203 282 | 7.9 | 624 | 590 | 31 | 24"150C-FV |
| 70 | 2-V-ND92-08454P | A351 CF8 SH, CERTIFY | CF8 | 92 203 365 | 1.3 | 174 | 146 | 23 | 6"-300C-GV (ECO) |
| 71 | 2-V-U556-08454P | A351 CF8 SH, CERTIFY | CF8 | 92 203 400 | 7.0 | 284 | 232 | 44 | 10"-600C-GV |
| 72 | 2-V-F912-08454P | A351 CF8 SH, CERTIFY | CF8 | 92 203 449 | 0.98 | 102 | 60 | 27 | 3" -600C-GV |
| 73 | 2-V-F913-08454P | A351 CF8 SH, CERTIFY | CF8 | 92 203 452 | 1.67 | 130 | 86 | 30 | 4" -600C-GV |
| 74 | 2-V-F914-08454P | A351 CF8M SH, CERTIFY | CF8M | 92 203 462 | 1.67 | 130 | 86 | 30 | 4" -600C-GV |
| 75 | 2-V-F528-08454P | A351 CF8 SH, CERTIFY | CF8 | 92 203 461 | 3.8 | 184 | 136 | 42 | 6" -600C-GV |
| 76 | 2-V-U604-08454P/1 | A351 CF8M SH, CERTIFY | CF8M | 92 203 489 | 26.2 | 650 | 560 | 39 (19) | 24" -150C-FV |
| 77 | 2-V-NC26-08454P | A216 WCB NR, CERTIFY | WCB | 92 203 515 | 5.11 | 284 | 234 | 32 | 10"-150C-GV |
| 78 | 2-V-NP33-08454P/1 | SA995 CD3MN REFER NOTE, CERTIFY | CD3MN | 92 203 496 | 1.1 | 169 | 147 | 26 | 6"-150C-GV |
| 79 | 2-V-NP35-08454P/1 | | | 92 203 497 | 1.8 | 223 | 198 | 28 | 8"-150C-GV |
| 80 | 2-V-NJ95-08454P/1 | | | 92 203 498 | 10.9 | 390 | 325 | 38 | 14"-150C-GV |
| 81 | 2-V-P725-08454P | | | 92 203 610 | 3.0 | 139 | 74 | 35 | 4"-C300-SV |
| 82 | 2-V-P726-08454P | | | 92 203 606 | 4.7 | 182 | 124 | 43 | 6"-C300-SV |
| 83 | 2-V-P727-08454P | | | 92 203 590 | 8.0 | 238 | 169 | 46 | 8"-C300-RV |
| 84 | 2-V-P728-08454P | | | 92 203 594 | 10.2 | 270 | 194 | 47 | 10"-300C-RV |
| 85 | 2-V-NP55-08454P | | | 92 203 636 | 3.6 | 285 | 249 | 30 | 10"-150/300-GV |
| 86 | 2-V-NP56-08454P | | | 92 203 588 | 4.5 | 336 | 299 | 31 | 12"-150/300-GV |
| 87 | 2-V-Z113-08454P | | | 92 203 628 | 1.6 | 136 | 96 | 28 | 4"-150C-FV |
| 88 | 2-V-Z114-08454P | | | 92 203 629 | 11.3 | 432 | 374 | 39 | 16"-150C-FV |
| 89 | 2-V-NP58-08454P | A351 CF8 SH, CERTIFY | CF8 | 92 203 736 | 2.2 | 228 | 198 | 28 | 8"-150/300-GV |
| 90 | 2-V-NP60-08454P | | | 92 203 742 | 4.5 | 336 | 299 | 31 | 12"-150/300-GV |
| # 91 | 2-V-U937-08454P | | | 92 203 751 | 1.4 | 174 | 146 | 26 | 6"-150/300-GV |
| # 92 | 2-V-U940-08454P | | | 92 203 746 | 4.5 | 336 | 299 | 31 | 12"-150/300-GV |
| # 93 | 2-V-U951-08454P | | | 92 203 740 | 2.2 | 228 | 198 | 28 | 8"-150/300-GV |
| 94 | 2-V-P764-08454P | | | 92 203 791 | 27.7 | 383 | 284 | 68 | 14"-600C-RV |
| # 95 | 2-V-U961-08454P | | | 92 203 795 | | | | | |
| # 96 | 2-V-U939-08454P | | | 92 203 775 | 9.5 | 270 | 194 | 47 | 10"-300C-RV |
| 97 | 2-V-P762-08454P | | | 92 203 774 | | | | | |

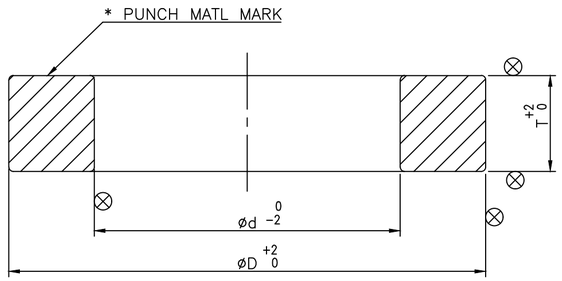


## NOTES:-

1. CASTING SHALL BE PROOF MACHINED TO THE DIMENSIONS SHOWN INTHE TABULATION.
2. NECESSARY MACHINING ALLOWANCES HAVE BEEN ADDED ON ALL MACHINABLE SURFACES
3. PERMISIBLE DIMENSIONAL DEVIATIONS OF NON TOLERANCED CASTING DIMENSIONS – REFER LATEST APPLICABLE QUALITY PROCEDURE.
4. CASTING SHALL COMPLY WITH THE REQUIREMENTS OF LATEST APPLICABLE QUALITY PROCEDURE.
5. UNSPECIFIED CASTING RADII 3 – 5 MM
6. HEAT TREATMENT FOR SA995 CD3MN AS PER ASME STANDARD SA-995 TABLE 1
   (HEAT TO 2050°F [1120°C] MINIMUM FOR SUFFICIENT TIME TO HEAT CASTING UNIFORMLY TO TEMPERATURE AND WATER QUENCH, OR THE CASTING MAY BE FURNACE COOLED TO 1850°F [1010°C] MINIMUM, HOLD FOR 15 MIN MINIMUM AND THEN WATER QUENCH. A RAPID COOL BY OTHER MEANS MAY BE EMPLOYED IN LIEU OF WATER QUENCH.)
7. # MARKED ITEMS ARE IGC TEST SHALL BE CONDUCTED.

| REV | DATE | ALTERED | |
|---|---|---|---|
| 19 | 10.10.18 | R.P.SINGH | CHD & APPD SSK & KRS |
| | | SL.No. 81 TO 97 INCLUDED<br>FOR SL.NO.76 DIMENSIONS 560 & 39 WERE 500 AND 48 RESPECTIVELY.<br>NOTES No. 7 ADDED | |
| 18 | 30.01.18 | S.SATHEES | CHD & APPD SSK & KRS |
| | | FOR SL.NO.78,79&80 MATERIAL SPECIFICATION CHANGED TO CD3MN FROM 6A<br>NOTE SL.NO.06 HEAT TREATMENT PROCESS REVISED | |
| 17 | 04.12.17 | R.P.SINGH | CHD & APPD SSK & KRS |
| ZONE | | SL.No.78,79 & 80 INCLUDED | |

CAUTION: The information on this document is the property of BHARAT HEAVY ELECTRICALS LTD. It must not be used directly or indirectly in any way detrimental to the interest of the company.

| No OF F | DESCRIPTION | MATL CODE | MATL SPECN | HEAT TREATMENT | SCRAP SORT | NET WT (kg) | GROSS WT (kg) | DRAWING No | ITEM No |
|---|---|---|---|---|---|---|---|---|---|
| – | – | – | – | – | – | – | – | – | – |

TYPE OF PRODUCT OR NAME OF CUSTOMER/PROJECT: CS

DRAWING REDRAWN WITH REV NO 17 ON 04.12.17

BHARAT HEAVY ELECTRICALS LTD., UNIT: HIGH PRESSURE BOILER PLANT. TIRUCHIRAPALLI -620014.

365-120

| | NAME | SIGN | DATE | NO.OF VAR. |
|---|---|---|---|---|
| DRN | A.S.PANDY | | 01.06.07 | |
| CHD | T.R.RAMAMURTHY | | 01.06.07 | |
| APPD | P.BOOMINATHAN | | 01.06.07 | |

DEPT VL | CODE 320 | SCALE NTS. | WEIGHT (KG). – | REFERENCE INFORMATIONS CAD:C208454P | NO. OF ITEMS

TITLE: SEAT RING (PROOF MACHINED CASTING)

CARD CODE: U 01

DRAWING NO. 2-V-0000-08454P

REV 19

Size A2

DRAWING NO. 2-V-0000-13591R

ALL DIMENSIONS ARE IN MILLIMETRES. FOR TOLERANCES OF UNTOLERANCED DIMENSIONS DURING MANUFACTURE REFER RELEVANT QCP / QP

## SECTION – AA

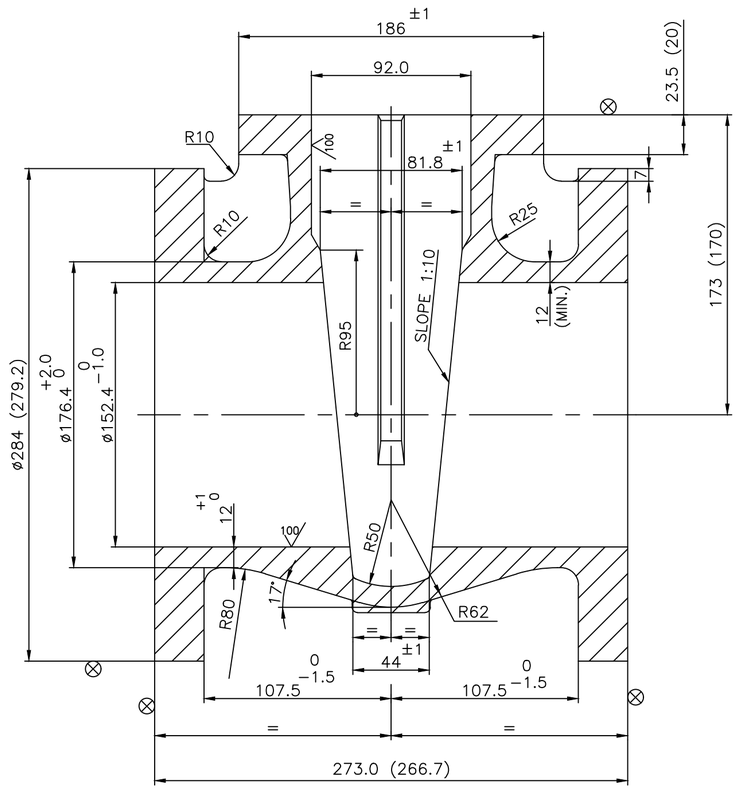


## SECTION – BB

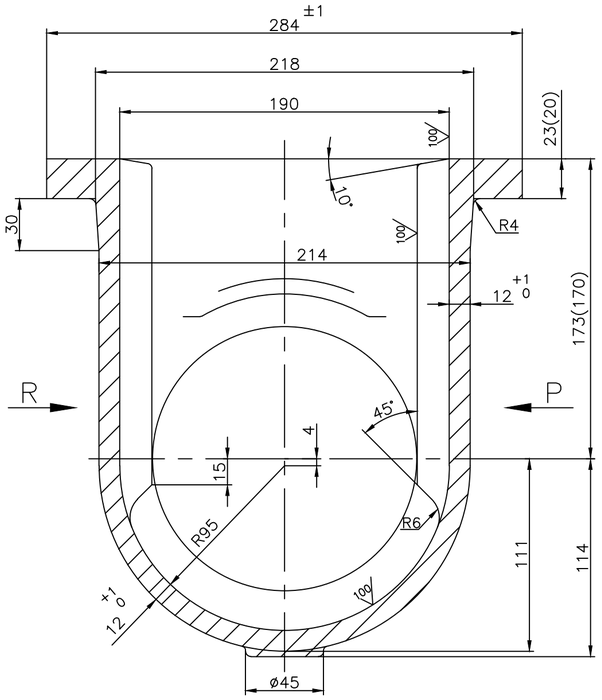


## VIEW – P

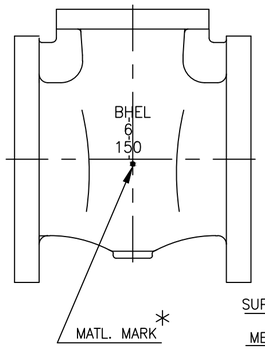


## VIEW – Q

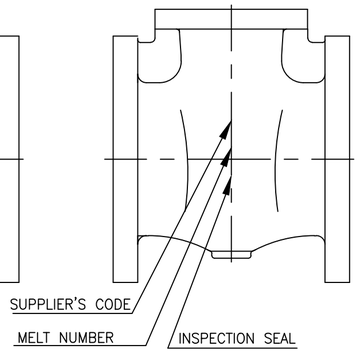


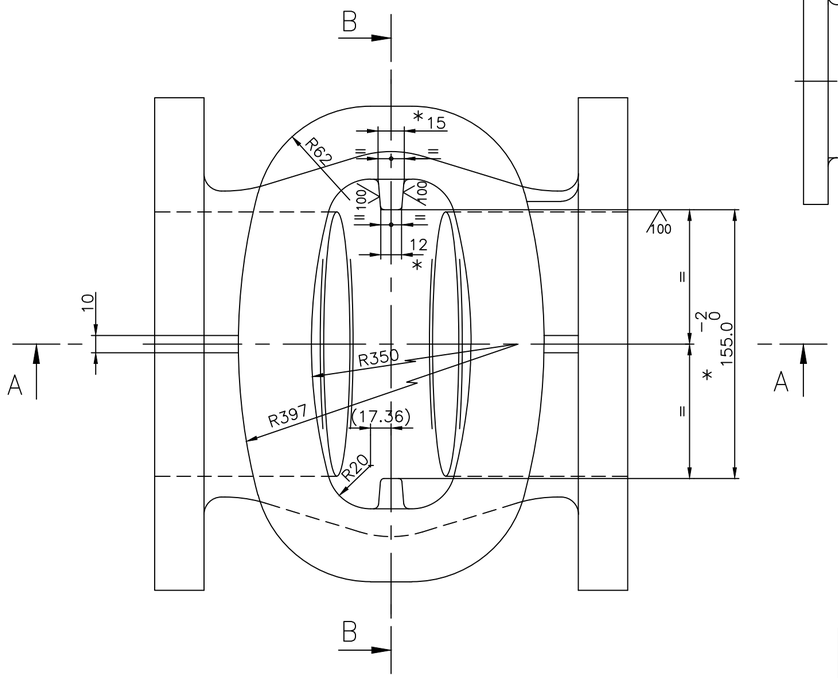


## NOTE:–

01. NECESSARY MACHINING ALLOWANCES HAVE BEEN ADDED ON ALL MACHINABLE SURFACES.
02. PERMISSIBLE DEVIATIONS OF NON TOLERANCED CASTING DIMENSIONS REFER APPLICABLE TDC
03. FINISH MACHINED DIMENSIONS ARE INDICATED WITHIN BRACKETS FOR INFORMATION ONLY.
04. LETTERS– BHEL,SIZE,MATL.& SUPPLIERS CODE ARE TO BE CAST IN THE INDICATED ZONE.
05. CASTING SHALL COMPLY WITH THE REQUIREMENTS OF APPLICABLE SPECIFICATION.
06. UNSPECIFIED CASTING RADII = R2 TO R3
07. HEIGHT OF CASTING LETTERS = 12 mm
08. ⊗ INDICATES SURFACE TO BE MACHINED.
09. 100 INDICATED CASTING SURFACES SHALL BE OF HIGH QUALITY WITHOUT SURFACE UNEVENNESS.
10. HEAT TREATMENT FOR SA995 CD3MN AS PER ASME STANDARD SA–995 TABLE 1
    (HEAT TO 2050°F [1120°C] MINIMUM FOR SUFFICIENT TIME TO HEAT CASTING UNIFORMLY TO TEMPERATURE AND WATER QUENCH, OR THE CASTING MAY BE FURNACE COOLED TO 1850°F [1010°C] MINIMUM, HOLD FOR 15 MIN MINIMUM AND THEN WATER QUENCH. A RAPID COOL BY OTHER MEANS MAY BE EMPLOYED IN LIEU OF WATER QUENCH.) SA351 CF8
11. # MARKED ITEMS IGC TEST SHALL BE CONDUCTED.

## * SPECIAL NOTE

01. GUIDE BAR DIMENSIONS TO BE MAINTAINED WITHIN THE TOLERENCE INDICATED.
02. BOTH GUIDE RIBS TO BE COPLANAR AND TRUELY VERTICAL.

| *MATL. MARK | SL. No. | DESCRIPTION | MATL CODE | MATL SPECN | HEAT TREATMENT | SCRAP SORT | NET WT (kg) | GROSS WT (kg) | DRAWING No / COMPONENT CODE | ITEM No |
|---|---|---|---|---|---|---|---|---|---|---|
| CF3M | 06 | CASTING | – | SA351 CF3M ATTESTED | SH | – | 42.4 | – | 2–V–NP76–13591R / 922038490000 | 001 |
| CF8 | #05 | CASTING | – | SA351 CF8 ATTESTED | SH | – | 42.4 | – | 2–V–U937–13591R / 922037490000 | 001 |
| CD3MN | 04 | CASTING | – | SA995 Gr.CD3MN PRODUCT ATTEST | REFER NOTE | – | 42.4 | – | 2–V–NP33–13591R/1 / 922034940000 | 001 |
| CF8M | 03 | CASTING | – | SA351 CF8M ATTESTED | SH | – | 42.4 | – | 2–V–NP27–13591R / 922034830000 | 001 |
| CF8 | 02 | CASTING | – | SA351 CF8 ATTESTED | SH | – | 42.4 | – | 2–V–NP03–13591R / 922033890000 | 001 |
| WCB | 01 | CASTING | – | ASTM A216 WCB– ATTESTED | NORMALISED | – | 42.4 | – | 2–V–NC06–13591R/2 / 922014250000 | 001 |

| REV | DATE | ALTERED | R.P.SINGH |
|---|---|---|---|
| 07 | 30.05.19 | CHD & APPD | SSK & KRS |
| | SL.No.06 INCLUDED | | |

| REV | DATE | ALTERED | R.P.SINGH |
|---|---|---|---|
| 06 | 08.11.18 | CHD & APPD | SSK & KRS |
| | SL.No.05 INCLUDED<br>NOTE No. 11 INCLUDED | | |

| REV | DATE | ALTERED | R.P.SINGH |
|---|---|---|---|
| 05 | 25.01.18 | CHD & APPD | SSK & KRS |
| ZONE | | | |
| 01. | FOR SL.NO.04 MATERIAL SPECIFICATION CHANGED TO CD3MN FORM 6A | | |
| 02. | NOTE SL.NO.10 HEAT TREATMENT PROCESS REVISED | | |

CAUTION: The information on this document is the property of BHARAT HEAVY ELECTRICALS LTD. It must not be used directly or indirectly in any way detrimental to the interest of the company.

TYPE OF PRODUCT OR NAME OF CUSTOMER/PROJECT

DRAWING REDRAWN WITH REV NO 05 ON 25.01.18

BHARAT HEAVY ELECTRICALS LTD.,
UNIT: HIGH PRESSURE BOILER PLANT.
TIRUCHIRAPALLI -620014.
365–120

| | NAME | SIGN | DATE | NO.OF VAR. |
|---|---|---|---|---|
| DRN | M.SRINIVASAN | | 15.03.04 | |
| CHD | P.BOOMINATHAN | | 15.03.04 | |
| APPD | K.S.RAMAN | | 15.03.04 | |

DEPT VL
CODE 320
SCALE NTS
WEIGHT (KG). REF. TABLE
REFERENCE INFORMATIONS
CAD :C213591R
NO. OF ITEMS

TITLE
# BODY
( 6" – C150–FL)

CARD CODE U 01

DRAWING NO. 2–V–0000–13591R

REV 07

Size A2

DRAWING NO. 2-V-0000-13684R

ALL DIMENSIONS ARE IN MILLIMETRES. FOR TOLERANCES OF UNTOLERANCED DIMENSIONS DURING MANUFACTURE REFER RELEVANT QCP / QP

## SECTION BB

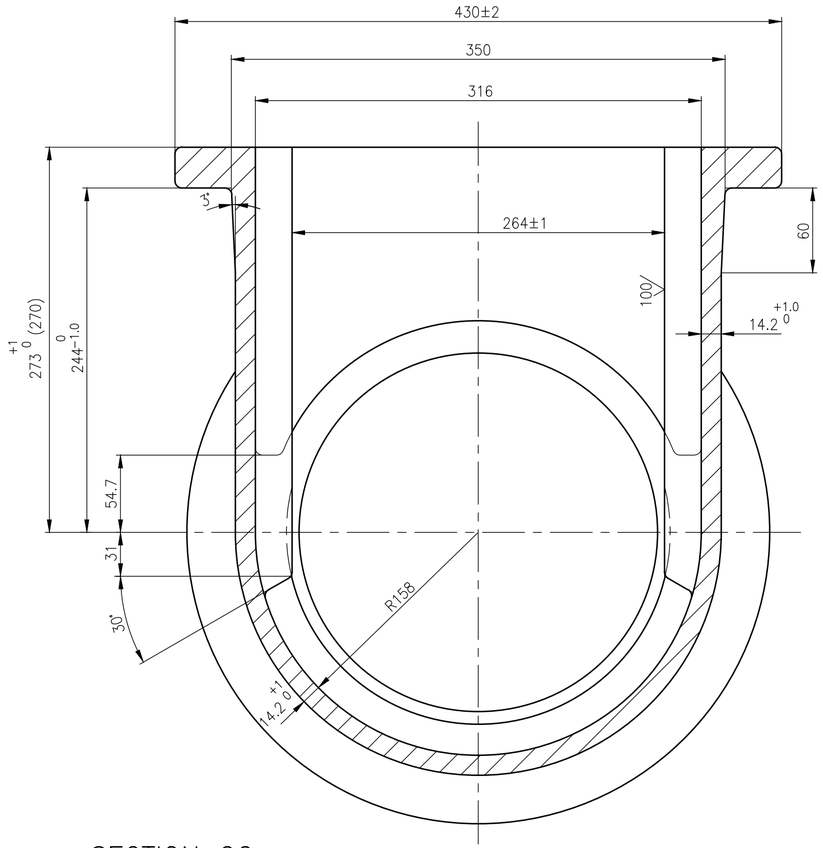


## SECTION CC

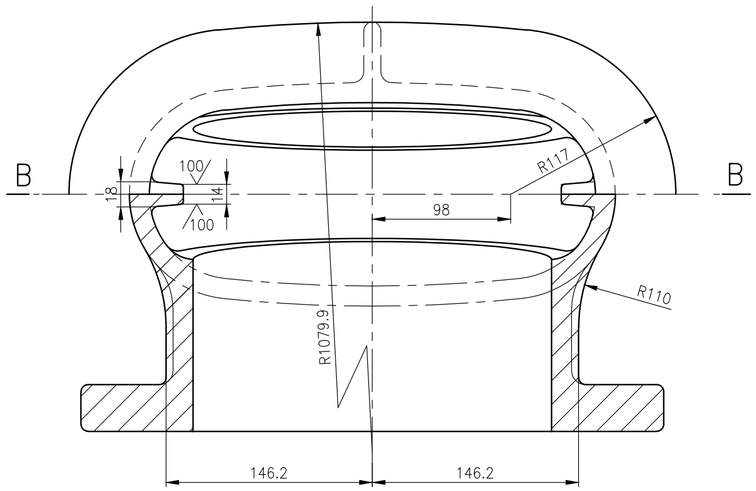


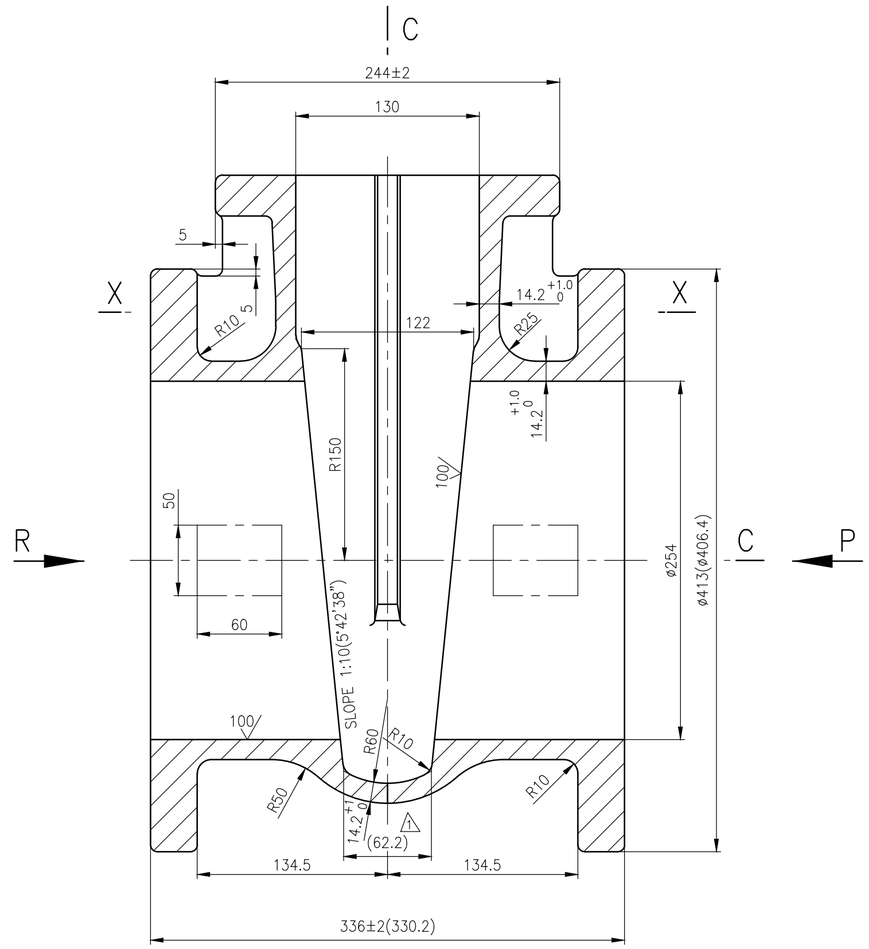


## SECTION XX

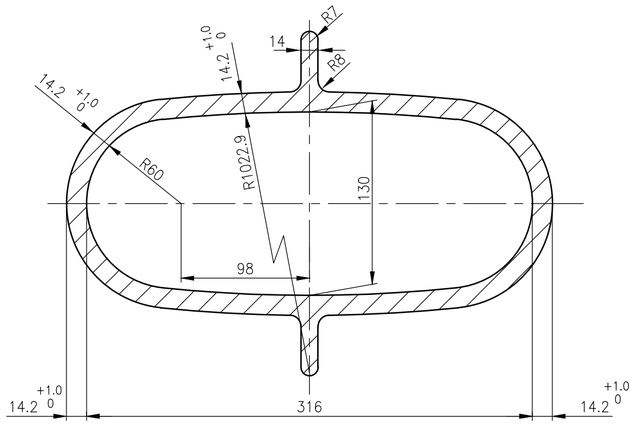


## MARKING DETAILS ON CASTING

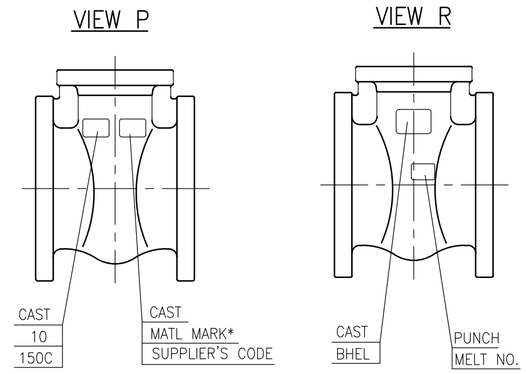


NOTES:

1. NECESSARY ALLOWANCES HAVE BEEN ADDED ON ALL MACHINABLE SURFACES.
2. PERMISSIBLE DIMENSIONAL DEVIATIONS OF CASTING SURFACES REFER LATEST APPLICABLE QUALITY WORK INSTRUCTION
3. FINISH MACHINED DIMENSIONS ARE INDICATED WITHIN BRACKETS FOR INFORMATION.
4. 100/ CASTING SURFACES MUST BE OF HIGH QUALITY WITHOUT SURFACE UNEVENNESS.
5. UNSPECIFIED CASTING RADIOUS 3mm.
6. ⊗ SURFACE TO BE MACHINED.
7. HEIGHT OF CASTING LETTERS 30mm.
8. CASTING SHALL GENERALLY COMPLY WITH THE REQUIREMENTS OF LATEST APPLICABLE QUALITY WORK INSTRUCTION IN ALL RESPECTS.
9. PUNCHING DETAILS SHALL BE MARKED ONLY ON RAISED FLAT SURFACE GIVEN AT ZONE B8

| SL. No. | DRAWING No. | MATL. CODE | MATL. SPECN. | *MATL. MARK | ITEM No. |
|---|---|---|---|---|---|
| 03 | 2-V-ND95-13684R | 922033720000 | SA351 CF8M, SH ATTEST | CF8M | 001 |
| 02 | 2-V-NJ29-13684R | 922033270000 | SA351 CF8, SH ATTEST | CF8 | 001 |
| 01 | 2-V-NC10-13684R/1 | 922014730000 | SA216 WCB, SH ATTEST | WCB | 001 |

| No OFF | DESCRIPTION | MATL CODE | MATL SPECN | HEAT TREATMENT | SCRAP SORT | NET WT (kg) | GROSS WT (kg) | DRAWING No | ITEM No |
|---|---|---|---|---|---|---|---|---|---|
| – | – | – | – | – | – | – | – | – | – |

| REV | DATE | ALTERED | |
|---|---|---|---|
| 03 | 19.10.15 | M.SELVAM | CHD & APPD MS & SSK |
| | SL. No. 03 INCLUDED | | |
| 02 | 01.10.14 | A.MARIMUTHU | CHD & APPD MS & SSK |
| | SL. No. 02 INCLUDED | | |
| 1 | 29.11.05 | VB | CHD & APPD RLN&MRK |
| ZONE | DIMENSION (62.2) WAS (72.2) | | |
| | DCP No.800535 | | |

CAUTION: The information on this document is the property of BHARAT HEAVY ELECTRICALS LTD. It must not be used directly or indirectly in any way detrimental to the interest of the company.

TYPE OF PRODUCT
OR NAME OF
CUSTOMER/PROJECT

BHARAT HEAVY ELECTRICALS LTD.,
UNIT: HIGH PRESSURE BOILER PLANT.
TIRUCHIRAPALLI -620014.
365-120

| | NAME | SIGN | DATE | NO.OF VAR. |
|---|---|---|---|---|
| DRN | V.BAIRAVAN | | 10.10.03 | |
| CHD | R.L.NARAYANAN | | 10.10.03 | |
| APPD | M.RAJAKUMAR | | 10.10.03 | |

DEPT VL
CODE 320
SCALE N T S
WEIGHT (KG). 105
REFERENCE INFORMATIONS CAD REF.2V13684R
NO. OF ITEMS

TITLE BODY 10"/150 CLASS GV
CARD CODE U 01
DRAWING NO. 2-V-0000-13684R
REV 03

Size A2

DRAWING NO. 2-V-0000-13687R

ALL DIMENSIONS ARE IN MILLIMETRES. FOR TOLERANCES OF UNTOLERANCED DIMENSIONS DURING MANUFACTURE REFER RELEVANT QCP / QP

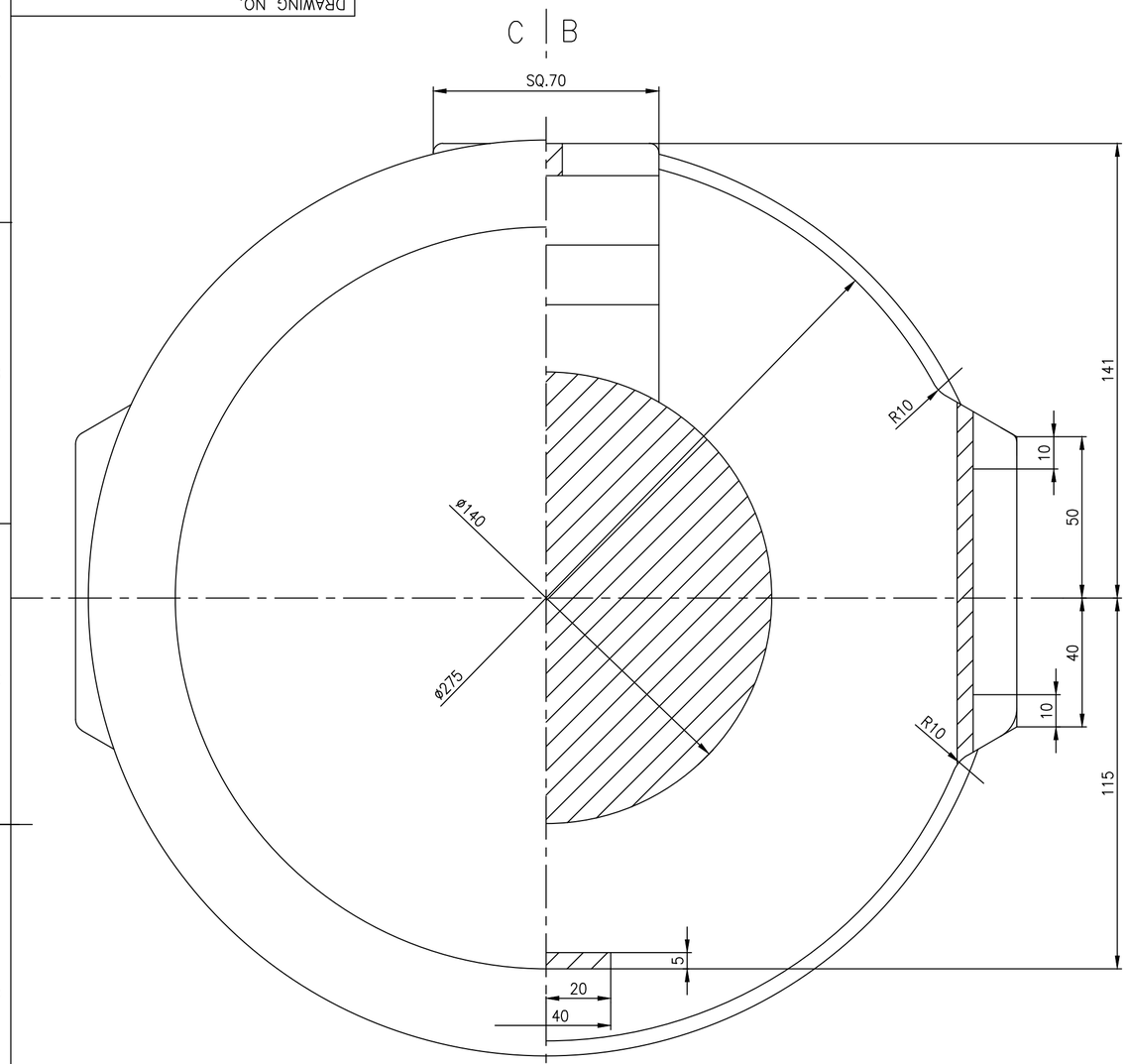


SECTION BB

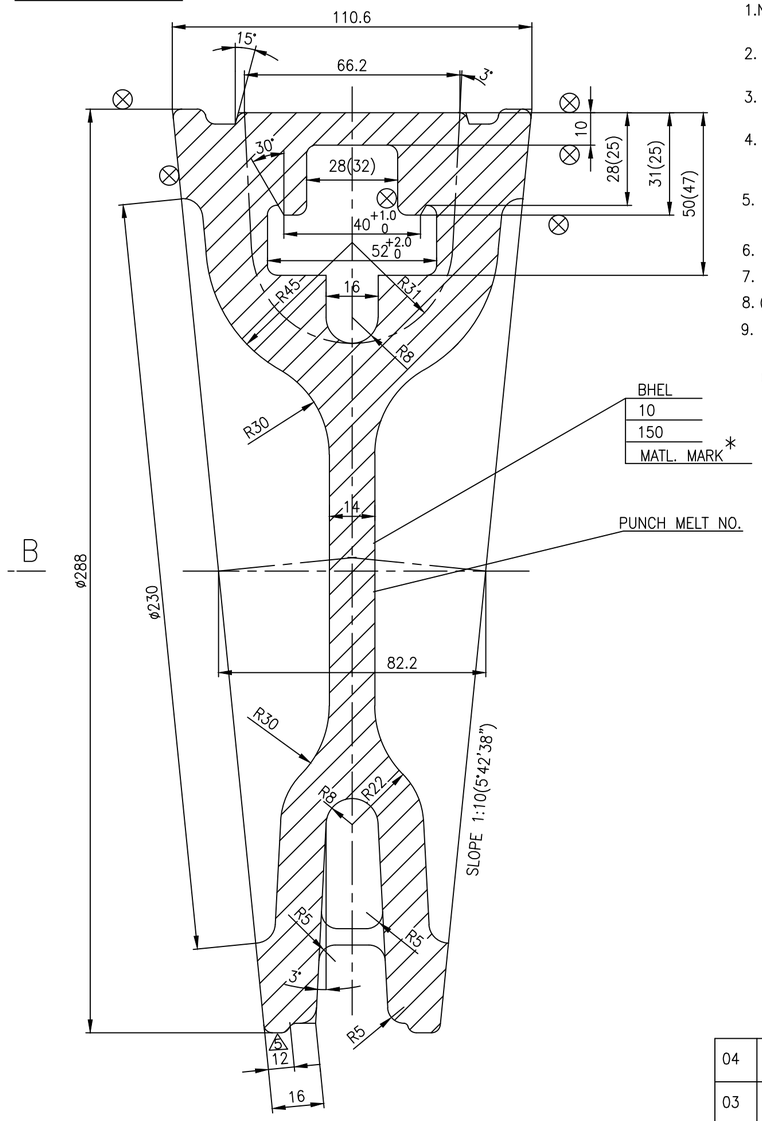


## NOTES:

1. NECESSARY MACHINING ALLOWANCES HAVE BEEN ADDED ON ALL MACHINABLE SURFACES.
2. FOR PERMISSIBLE DEVIATIONS ON NON TOLERANCED CASTING DIMENSION REFER APPLICABLE TDC
3. FINISH MACHINED DIMENSIONS ARE INDICATED WITHIN BRACKETS FOR INFORMATION ONLY.
4. LETTERS– SIZE. MAYL.& SUPPLIERS CODE ARE TO BE CAST IN THE INDICATED ZONE.
5. CASTING SHALL COMPLY WITH THE REQUIREMENTS OF APPLICABLE TDC
6. UNSPECIFIED CASTING RADII = RS TO R3
7. HEIGHT OF CASTING LETTERS =5 mm
8. ⊗ INDICATES SURFACE TO BE MACHINED
9. HEAT TREATMENT FOR SA995 CD3MN AS PER ASME STANDARD SA–995 TABLE 1
   (HEAT TO 2050°F [1120°C] MINIMUM FOR SUFFICIENT TIME TO HEAT CASTING UNIFORMLY TO TEMPERATURE AND WATER QUENCH, OR THE CASTING MAY BE FURNACE COOLED TO 1850°F [1010°C] MINIMUM, HOLD FOR 15 MIN MINIMUM AND THEN WATER QUENCH. A RAPID COOL BY OTHER MEANS MAY BE EMPLOYED IN LIEU OF WATER QUENCH.)

SECTION CC

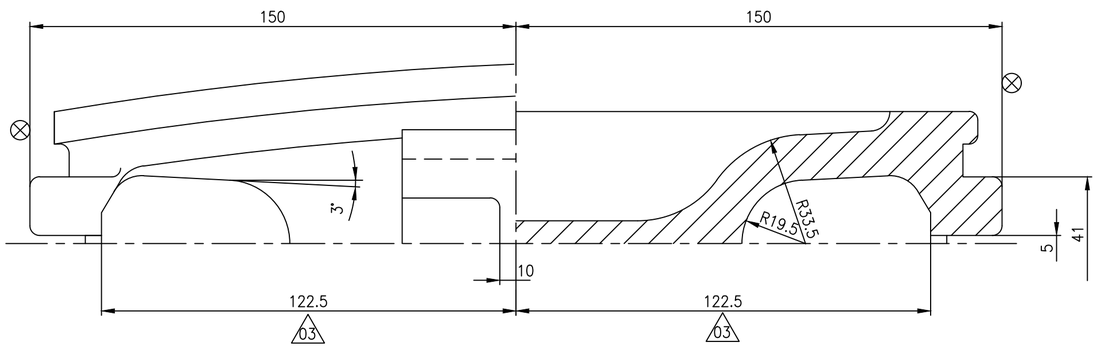


| SL. No. | DRAWING No. | MATL. CODE | MATL. SPECN. | *MATL. MARK | ITEM No. |
|---|---|---|---|---|---|
| 04 | 2–V–NP55–13687R/1 | 922036340000 | SA995 CD3MN CERTIFY, REF. NOTE | CD3MN | 004 |
| 03 | 2–V–NJ29–13687R/2 | 922033280000 | A351 CF8 CERTIFY,SH | CF8 | 004 |
| 02 | 2–V–ND12–13687R/2 | 922031310000 | A351 CF8M CERTIFY,SH | CF8M | 004 |
| 01 | 2–V–NC10–13687R/2 | 922014750000 | A216 WCB CERTIFY,NR | WCB | 004 |

| No OFF | DESCRIPTION | MATL CODE | MATL SPECN | HEAT TREATMENT | SCRAP SORT | NET WT (kg) | GROSS WT (kg) | DRAWING No | ITEM No |
|---|---|---|---|---|---|---|---|---|---|
| – | – | – | – | – | – | – | – | – | – |

TYPE OF PRODUCT
OR NAME OF
CUSTOMER/PROJECT

BHARAT HEAVY ELECTRICALS LTD.,
UNIT: HIGH PRESSURE BOILER PLANT.
TIRUCHIRAPALLI -620014.
365–120

| | NAME | SIGN | DATE | NO.OF VAR. |
|---|---|---|---|---|
| DRN | V.BAIRAVAN | | 20.05.05 | |
| CHD | R.L.NARAYANAN | | 20.05.05 | |
| APPD | M.RAJAKUMAR | | 20.05.05 | |

DEPT VL
CODE 320
SCALE N T S
WEIGHT (KG). 19.2
REFERENCE INFORMATIONS CAD REF.C213687R
NO. OF ITEMS

TITLE WEDGE 10"/150 CLASS GV
CARD CODE U 01
DRAWING NO. 2–V–0000–13687R
REV 05

CAUTION: The information on this document is the property of BHARAT HEAVY ELECTRICALS LTD. It must not be used directly or indirectly in any way detrimental to the interest of the company.

| REV | DATE | ALTERED | CHD & APPD | REMARKS |
|---|---|---|---|---|
| 05 | 24.01.19 | R.P.SINGH | SSK & KRS | DIMN 12 WAS 8 |
| 04 | 12.12.18 | R.P.SINGH | SSK & KRS | SL. No. 04 INCLUDED<br>NOTES No. 09 INCLUDED |
| 03 | 16.02.18 | RAVI PRATAP SINGH | SSK & KRS | DIMENSION 122.5 WAS 127.5. |
| 02 | 01.10.14 | A.MARIMUTHU | MS & SSK | SL.NO. 03 INCLUDED |
| 01 | 28.05.13 | M.S | SSK&KRS | SL.NO. 02 INCLUDED |

ZONE

Size A2

CORPORATE DRG ID:TP-DG-2-V-0000-14084R/05

DRAWING NO. 2-V-0000-14084R

ALL DIMENSIONS ARE IN MILLIMETRES. FOR TOLERANCES OF UNTOLERANCED DIMENSIONS DURING MANUFACTURE REFER RELEVANT QCP / QP

| SL. No. | DRAWING NUMBER | MATL.SPECN. | TYPE No. | MATL. MARK | MATERIAL CODE | Wt.(kg) | DIMENSIONS SQ.A | ØD | L | L1 | L2 | L3 | L4 | L5 | H | R1 | R2 | APPLICABLE VALVES |
|---|---|---|---|---|---|---|---|---|---|---|---|---|---|---|---|---|---|---|
| 01 | 2-V-5144-14084R | A216 WCB NR, CERTIFY | 5144 | WCB | 92 201 664 | 2.00 | 66 | 38 | 55 | 38 | 32 | 18 | 6 | 6 | 102.5 | 60 | 20 | 4"-150C & 300C-FV |
| 02 | 2-V-5182-14084R | A217 WC9 N&T, CERTIFY | 5182 | WC9 | 92 201 665 | 2.00 | 66 | 38 | 55 | 38 | 32 | 18 | 6 | 6 | 102.5 | 60 | 20 | 4"-150C & 300C-FV |
| 03 | 2-V-Z012-14084R | A351 CF8M SH, CERTIFY | Z012 | CF8M | 92 201 666 | 2.00 | 66 | 38 | 55 | 38 | 32 | 18 | 6 | 6 | 102.5 | 60 | 20 | 4"-150C & 300C-FV |
| 04 | 2-V-5173-14084R | A216 WCB NR, CERTIFY | 5173 | WCB | 92 201 667 | 3.65 | 85 | 38 | 65 | 48 | 38 | 26 | 10.5 | 6 | 132 | 75 | 25 | 6"-150C & 300C-FV |
| 05 | 2-V-5193-14084R | A217 WC9 N&T, CERTIFY | 5193 | WC9 | 92 201 668 | 3.65 | 85 | 38 | 65 | 48 | 38 | 26 | 10.5 | 6 | 132 | 75 | 25 | 6"-150C & 300C-FV |
| 06 | 2-V-Z042-14084R | A351 CF8M SH, CERTIFY | Z042 | CF8M | 92 201 669 | 3.65 | 85 | 38 | 65 | 48 | 38 | 26 | 10.5 | 6 | 132 | 75 | 25 | 6"-150C & 300C-FV |
| 07 | 2-V-5150-14084R | A216 WCB NR, CERTIFY | 5150 | WCB | 92 201 670 | 7.30 | 105 | 50 | 80 | 60 | 48 | 34 | 12 | 7 | 160 | 85 | 25 | 8"-150C & 300C-FV |
| 08 | 2-V-5195-14084R | A217 WC9 N&T, CERTIFY | 5195 | WC9 | 92 201 671 | 7.30 | 105 | 50 | 80 | 60 | 48 | 34 | 12 | 7 | 160 | 85 | 25 | 8"-150C & 300C-FV |
| 09 | 2-V-Z048-14084R | A351 CF8M SH, CERTIFY | Z048 | CF8M | 92 201 672 | 7.30 | 105 | 50 | 80 | 60 | 48 | 34 | 12 | 7 | 160 | 85 | 25 | 8"-150C & 300C-FV |
| 10 | 2-V-5158-14084R | A216 WCB NR, CERTIFY | 5158 | WCB | 92 201 771 | 0.75 | 45 | 32 | 50 | 30 | 24 | 10 | 6.6 | 7 | 64 | 28 | 12 | 2"-150C-FV |
| 11 | 2-V-Z004-14084R | A351 CF8 SH, CERTIFY | Z004 | CF8 | 92 201 772 | 0.75 | 45 | 32 | 50 | 30 | 24 | 10 | 6.6 | 7 | 64 | 28 | 12 | 2"-150C-FV |
| 12 | 2-V-Z057-14084R | A351 CF8M SH, CERTIFY | Z057 | CF8M | 92 201 773 | 0.75 | 45 | 32 | 50 | 30 | 24 | 10 | 6.6 | 7 | 64 | 28 | 12 | 2"-150C-FV |
| 13 | 2-V-5153-14084R | A216 WCB NR, CERTIFY | 5153 | WCB | 92 201 774 | 0.86 | 45 | 34 | 50 | 30 | 26 | 12 | 4.1 | 7 | 78 | 28 | 16 | 2"-300C-FV |
| 14 | 2-V-Z032-14084R | A351 CF8 SH, CERTIFY | Z032 | CF8 | 92 201 775 | 0.86 | 45 | 34 | 50 | 30 | 26 | 12 | 4.1 | 7 | 78 | 28 | 16 | 2"-300C-FV |
| 15 | 2-V-5198-14084R | A217 WC6 N&T, CERTIFY | 5198 | WC6 | 92 201 776 | 0.86 | 45 | 34 | 50 | 30 | 26 | 12 | 4.1 | 7 | 78 | 28 | 16 | 2"-300C-FV |
| 16 | 2-V-5157-14084R | A216 WCB NR, CERTIFY | 5157 | WCB | 92 201 777 | 0.90 | 45 | 34 | 50 | 30 | 26 | 12 | 1.9 | 7 | 89.5 | 30 | 16 | 3"-150C-FV |
| 17 | 2-V-5199-14084R | A351 CF8 SH, CERTIFY | 5199 | CF8 | 92 201 778 | 0.90 | 45 | 34 | 50 | 30 | 26 | 12 | 1.9 | 7 | 89.5 | 30 | 16 | 3"-150C-FV |
| 18 | 2-V-Z024-14084R | A351 CF8M SH, CERTIFY | Z024 | CF8M | 92 201 779 | 0.90 | 45 | 34 | 50 | 30 | 26 | 12 | 1.9 | 7 | 89.5 | 30 | 16 | 3"-150C-FV |
| 19 | 2-V-5152-14084R | A216 WCB NR, CERTIFY | 5152 | WCB | 92 201 780 | 1.21 | 54 | 34 | 50 | 33 | 30 | 16 | 4.9 | 7 | 89.5 | 32 | 16 | 3"-300C-FV |
| 20 | 2-V-Z005-14084R | A217 WC9 N&T, CERTIFY | Z005 | WC9 | 92 201 781 | 1.21 | 54 | 34 | 50 | 33 | 30 | 16 | 4.9 | 7 | 89.5 | 32 | 16 | 3"-300C-FV |
| 21 | 2-V-Z015-14084R | A351 CF8 SH, CERTIFY | Z015 | CF8 | 92 201 782 | 1.21 | 54 | 34 | 50 | 33 | 30 | 16 | 4.9 | 7 | 89.5 | 32 | 16 | 3"-300C-FV |
| 22 | 2-V-Z058-14084R | A351 CF8M SH, CERTIFY | Z058 | CF8M | 92 201 783 | 1.21 | 54 | 34 | 50 | 33 | 30 | 16 | 4.9 | 7 | 89.5 | 32 | 16 | 3"-300C-FV |
| 23 | 2-V-Z066-14084R | A351 CF8M SH, CERTIFY | Z066 | CF8M | 92 201 784 | 0.86 | 45 | 34 | 50 | 30 | 26 | 12 | 4.1 | 7 | 78 | 28 | 16 | 2"-300C-FV |
| 24 | 2-V-Z099-14084R | A217 WC9 NT, CERTIFY | Z099 | WC9 | 92 203 355 | 0.86 | 45 | 34 | 50 | 30 | 26 | 12 | 4.1 | 7 | 78 | 28 | 16 | 2"-300C-FV |
| # 25 | 2-V-U633-14084R | A351 CF8 SH, CERTIFY | U633 | CF8 | 92 203 533 | 0.90 | 45 | 34 | 50 | 30 | 26 | 12 | 1.9 | 7 | 89.5 | 30 | 16 | 3"-150C-FV |
| # 26 | 2-V-U638-14084R | | U638 | | 92 203 534 | 0.75 | | 32 | | | 24 | 10 | 6.6 | | 64 | 28 | 12 | 2"-150C-FV |
| # 27 | 2-V-U639-14084R | | U639 | | 92 203 535 | 0.86 | | 34 | | | 26 | 12 | 4.1 | | 78 | 28 | 16 | 2"-300C-FV |
| # 28 | 2-V-U934-14084R | | U934 | | 92 203 691 | 3.65 | 85 | 38 | 65 | 48 | 38 | 26 | 10.5 | 6 | 132 | 75 | 25 | 6"-150C-FV |
| # 29 | 2-V-U935-14084R | | U935 | | 92 203 696 | 2.00 | 66 | 38 | 55 | 38 | 32 | 18 | 6 | 6 | 102.5 | 60 | 20 | 4"-150C-FV |
| 30 | 2-V-Z113-14084R | SA995 CD3MN REF. NOTE, CERTIFY | Z113 | CD3MN | 92 203 613 | 2.00 | 66 | 38 | 55 | 38 | 32 | 18 | 6 | 6 | 102.5 | 60 | 20 | 4"-150C-FV |

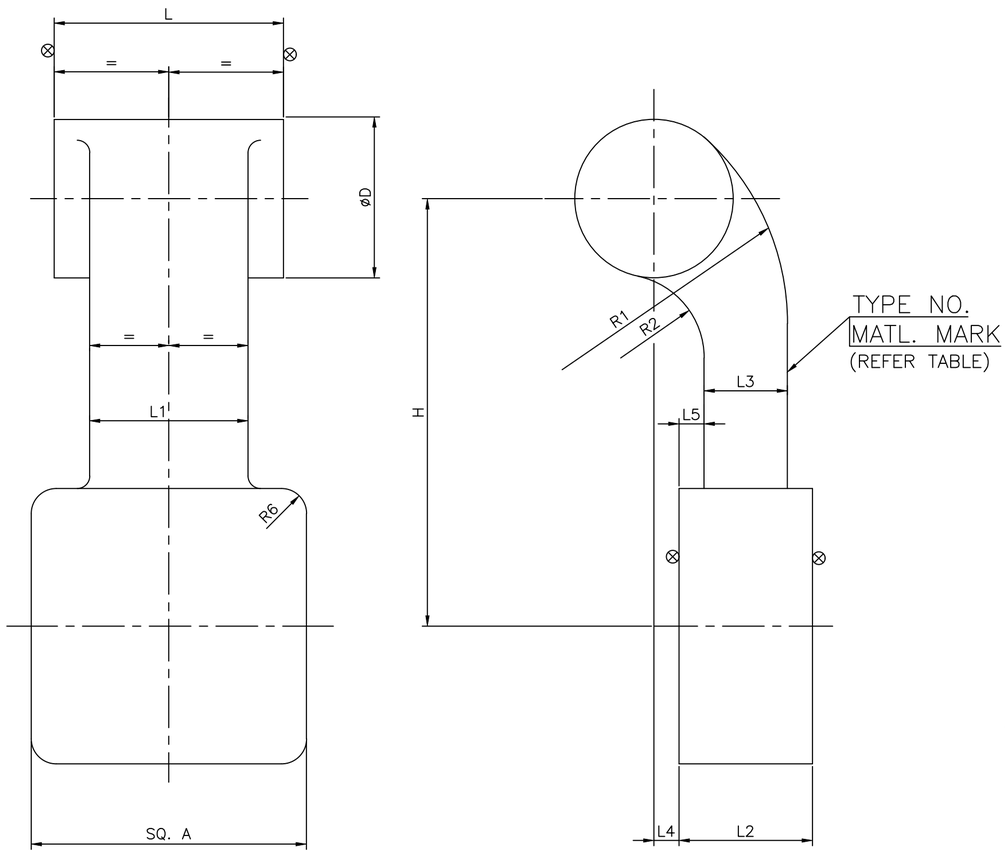


## NOTES:-

1. NECESSARY MACHINING ALLOWANCES HAVE BEEN ADDED ON ALL MACHINABLE SURFACES.
2. PERMISIBLE DIMENSIONAL DEVIATIONS OF NON TOLERANCED CASTING DIMENSIONS – REFER LATEST APPLICABLE QUALITY PROCEDURE.
3. CASTING SHALL COMPLY WITH THE REQUIREMENTS OF LATEST APPLICABLE QUALITY PROCEDURE.
4. UNSPECIFIED CASTING RADII 3 – 5 MM.
5. HEIGHT OF CASTING LETTERS 5MM.
6. ⊗ SURFACES TO BE MACHINED FURTHER.
7. # MARKED ITEMS ARE IGC TEST SHALL BE CONDUCTED
8. HEAT TREATMENT FOR SA995 CD3MN AS PER ASME STANDARD SA-995 TABLE 1
   (HEAT TO 2050°F [1120°C] MINIMUM FOR SUFFICIENT TIME TO HEAT CASTING UNIFORMLY TO TEMPERATURE AND WATER QUENCH, OR THE CASTING MAY BE FURNACE COOLED TO 1850°F [1010°C] MINIMUM, HOLD FOR 15 MIN MINIMUM AND THEN WATER QUENCH. A RAPID COOL BY OTHER MEANS MAY BE EMPLOYED IN LIEU OF WATER QUENCH.)

| REV | DATE | ALTERED | |
|---|---|---|---|
| 04 | 07.04.18 | R.P.SINGH | CHD & APPD SSK & KRS |
| | SL.No. 25, 26, & 27 INCLUDED | | |
| 03 | 04.02.15 | A.MARIMUTHU | CHD & APPD MS & SSK |
| | SL.No. 24 INCLUDED | | |
| 02 | 30.05.08 | T.R.RAMAMURTHY | CHD & APPD PBN & MRK |
| | SL.No.23 INCLUDED | | |
| 05 | 05.09.18 | R.P.SINGH | CHD & APPD SSK & KRS |
| | SL.No. 28 TO 30 INCLUDED<br>NOTES No. 8 INCLUDED | | |

ZONE

CAUTION: The information on this document is the property of BHARAT HEAVY ELECTRICALS LTD. It must not be used directly or indirectly in any way detrimental to the interest of the company.

| No OF | DESCRIPTION | MATL CODE | MATL SPECN | HEAT TREATMENT | SCRAP SORT | NET WT (kg) | GROSS WT (kg) | DRAWING No | ITEM No |
|---|---|---|---|---|---|---|---|---|---|
| – | – | – | – | – | – | – | – | – | – |

TYPE OF PRODUCT OR NAME OF CUSTOMER/PROJECT: CS

DRG.REDRAWN WITH REV.02 ON 30.05.2008

BHARAT HEAVY ELECTRICALS LTD.,
UNIT: HIGH PRESSURE BOILER PLANT.
TIRUCHIRAPALLI -620014.
365-120

| | NAME | SIGN | DATE | NO.OF VAR. |
|---|---|---|---|---|
| DRN | T.R.RAMAMURTHY | | 30.05.08 | – |
| CHD | T.R.RAMAMURTHY | | 30.05.08 | |
| APPD | P.BOOMINATHAN | | 30.05.08 | |

DEPT VL
CODE 320
SCALE NTS.
WEIGHT (KG). –
REFERENCE INFORMATIONS CAD:C214084R
NO. OF ITEMS –

TITLE: ARM (CASTING)
CARD CODE U 01
DRAWING NO. 2-V-0000-14084R
REV 05

Size A2

CORPORATE DRG ID:TP-DG-2-V-0000-14084R/05

DRAWING NO. 2-V-0000-14151R

ALL DIMENSIONS ARE IN MILLIMETRES. FOR TOLERANCES OF UNTOLERANCED DIMENSIONS DURING MANUFACTURE REFER RELEVANT QCP / QP

## SECTION-BB

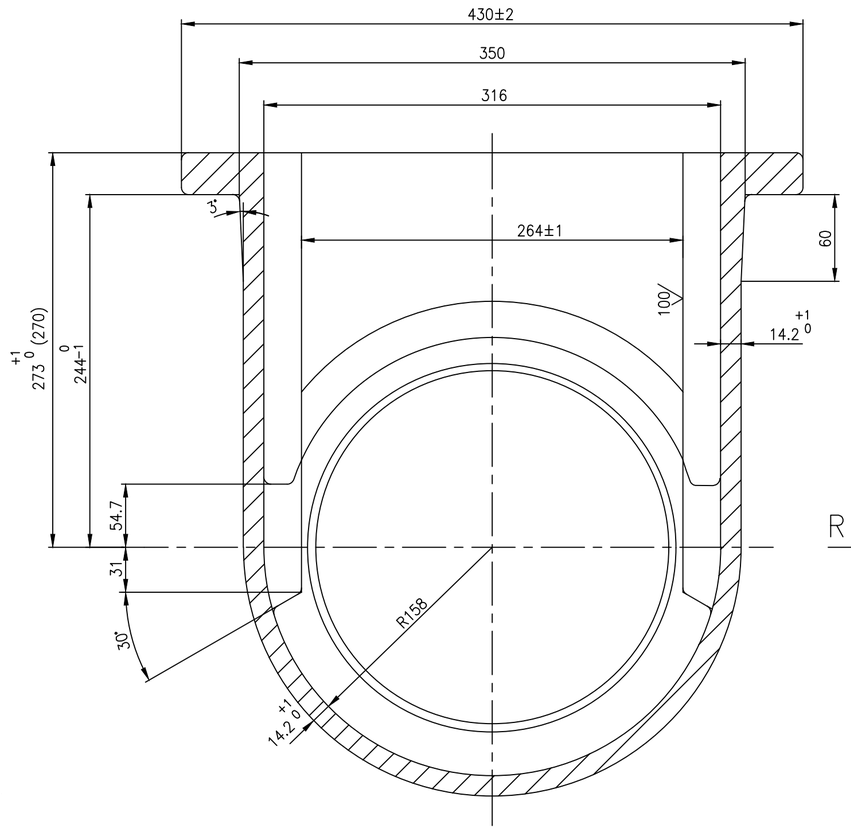


## SECTION-CC

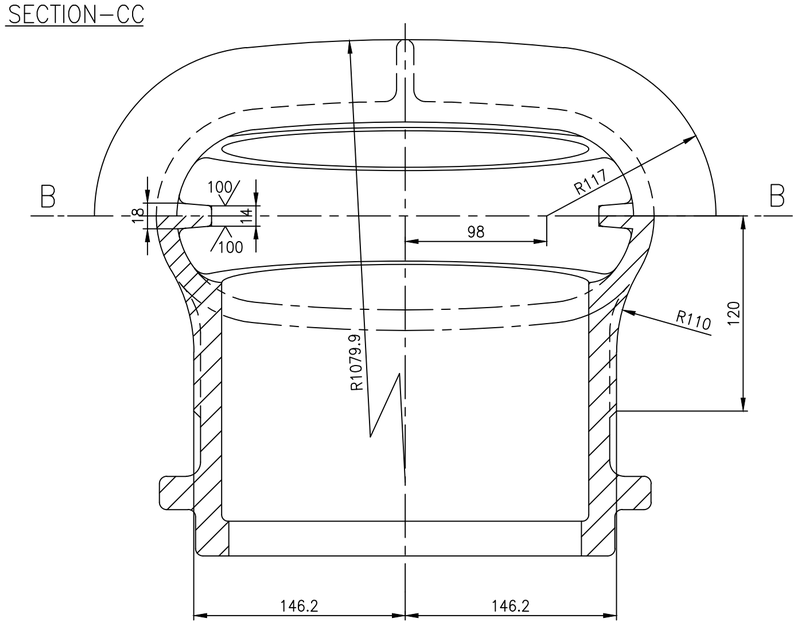


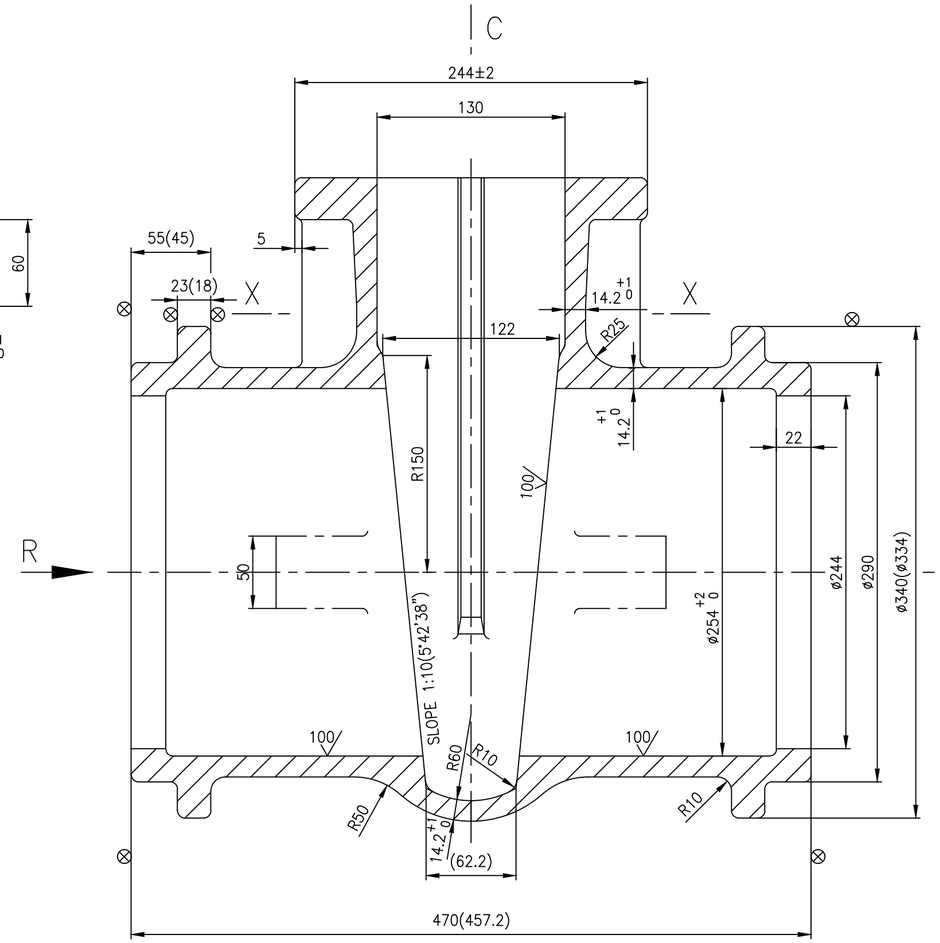


## SECTION-XX

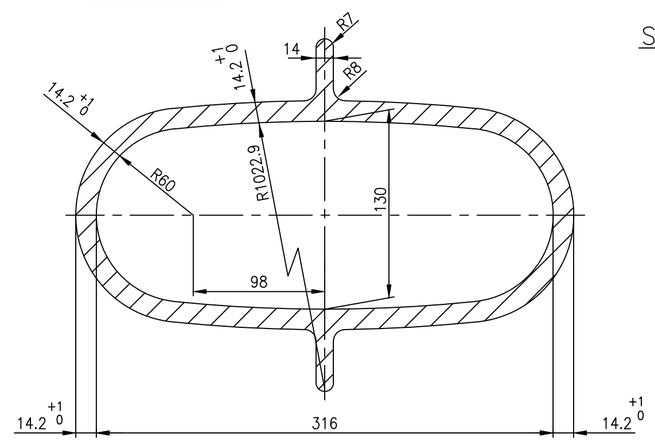


## MARKING DETAILS ON CASTING

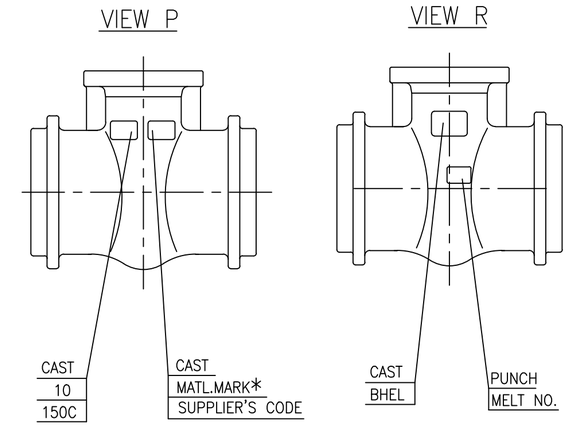


## NOTES:

1. NECESSARY ALLOWANCES HAVE BEEN ADDED ON ALL MACHINABLE SURFACES.
2. PERMISSIBLE DIMENSIONAL DEVIATIONS OF CASTING SURFACES REFER LATEST APPLICABLE QUALITY WORK INSTRUCTION
3. FINISH MACHINED DIMENSIONS ARE INDICATED WITHIN BRACKETS FOR INFORMATION.
4. 100 CASTING SURFACES MUST BE OF HIGH QUALITY WITHOUT SURFACE UNEVENNESS.
5. UNSPECIFIED CASTING RADIOUS 3mm.
6. ⊗ SURFACE TO BE MACHINED.
7. HEIGHT OF CASTING LETTERS 30mm.
8. CASTING SHALL GENERALLY COMPLY WITH THE REQUIREMENTS OF LATEST APPLICABLE QUALITY WORK INSTRUCTION IN ALL RESPECTS.
9. PUNCHING DETAILS SHALL BE MARKED ONLY ON RAISED FLAT SURFACE GIVEN AT ZONE B8
10. RISER REMAINS ARE TO COMPLETELY REMOVED SUITABLY.
11. HEAT TREATMENT FOR ASME 995 CD3MN AS PER ASME STANDARD ASME-995 TABLE 1 (HEAT TO 2050°F [1120°C] MINIMUM FOR SUFFICIENT TIME TO HEAT CASTING UNIFORMLY TO TEMPERATURE AND WATER QUENCH, OR THE CASTING MAY BE FURNACE COOLED TO 1850°F [1010°C] MINIMUM, HOLD FOR 15 MIN MINIMUM AND THEN WATER QUENCH. A RAPID COOL BY OTHER MEANS MAY BE EMPLOYED IN LIEU OF WATER QUENCH.)

## SPECIAL NOTES:-

1. GUIDE RIB DIMENSIONS TO BE MAINTAINED WITHIN THE TOLERANCES INDICATED
2. BOTH CUIDE RIBS TO BE COPLANER AND TRUELY VERTICAL.

| MATL.MARK* | SL NO. | DESCRIPTION | MATL CODE | MATL SPECN | HEAT TREATMENT | SCRAP SORT | NET WT (kg) | GROSS WT (kg) | DRAWING No | ITEM No |
|---|---|---|---|---|---|---|---|---|---|---|
| CF3M | 05 | CASTING | 92 203 878 | SA351 CF3M ATTEST | SH | – | 93 | -- | 2.V.NP83.14151R | 001 |
| CD3MN | 04 | CASTING | 92 203 637 | SA995 GR.CD3MN ATTEST | REFER NOTE | – | 93 | -- | 2.V.NP55.14151R | 001 |
| CF8 | 03 | CASTING | 92 203 383 | SA 351 CF8 ATTEST | SH | – | 93 | -- | 2.V.ND96.14151R | 001 |
| CF8M | 02 | CASTING | 92 203 128 | SA351 CF8M ATTEST | SH | – | 93 | -- | 2.V.ND12.14151R | 001 |
| WCB | 01 | CASTING | 92 201 685 | SA216 WCB ATTEST | NR | – | 93 | -- | 2.V.NC26.14151R | 001 |

| REV | DATE | ALTERED | | REV | DATE | ALTERED | | REV | DATE | ALTERED | | REV | DATE | ALTERED | |
|---|---|---|---|---|---|---|---|---|---|---|---|---|---|---|---|
| 04 | 05.08.19 | R.P.SINGH | CHD & APPD SSK & KRS | 03 | 05.03.19 | R.P.SINGH | CHD & APPD SSK & KRS | 02 | 26.05.15 | SELVAM | CHD & APPD MS&SSK | 01 | 27.05.13 | M.S | CHD & APPD SSK&KRS |
| | SL.No.05 INCLUDED | | | | SL.No.04 INCLUDED<br>NOTE No.11 INCLUDED | | | ZONE | SL.No. 03 INCLUDED | | | ZONE | SL.No. 02 INCLUDED | | |

CAUTION: The information on this document is the property of BHARAT HEAVY ELECTRICALS LTD. It must not be used directly or indirectly in any way detrimental to the interest of the company.

TYPE OF PRODUCT
OR NAME OF
CUSTOMER/PROJECT

BHARAT HEAVY ELECTRICALS LTD.,
UNIT: HIGH PRESSURE BOILER PLANT.
TIRUCHIRAPALLI -620014.
365-120

| | NAME | SIGN | DATE | NO.OF VAR. |
|---|---|---|---|---|
| DRN | A.S.PANDY | | 22.08.07 | |
| CHD | T.R.RAMAMURTHY | | 22.08.07 | |
| APPD | P.BOOMINATHAN | | 22.08.07 | |

DEPT VL
CODE 320
SCALE N T S
WEIGHT (KG). 93
REFERENCE INFORMATIONS: CAD REF.C214151R
NO. OF ITEMS

TITLE: BODY (10"/C150 BW GV)
CARD CODE U 01
DRAWING NO. 2-V-0000-14151R
REV 04

Size A2

DRAWING NO. 2-V-0000-14154R

ALL DIMENSIONS ARE IN MILLIMETRES. FOR TOLERANCES OF UNTOLERANCED DIMENSIONS DURING MANUFACTURE REFER RELEVANT QCP / QP

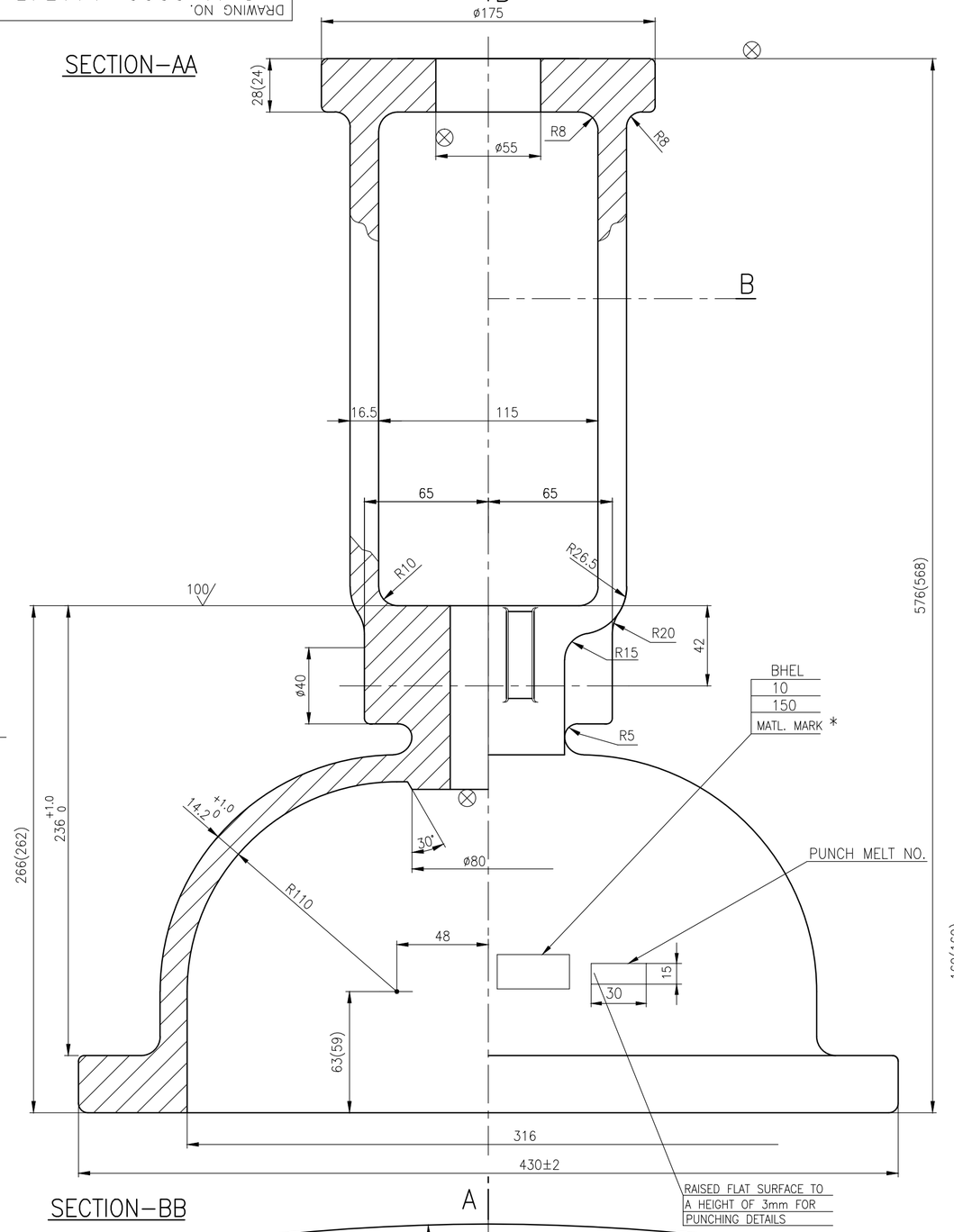


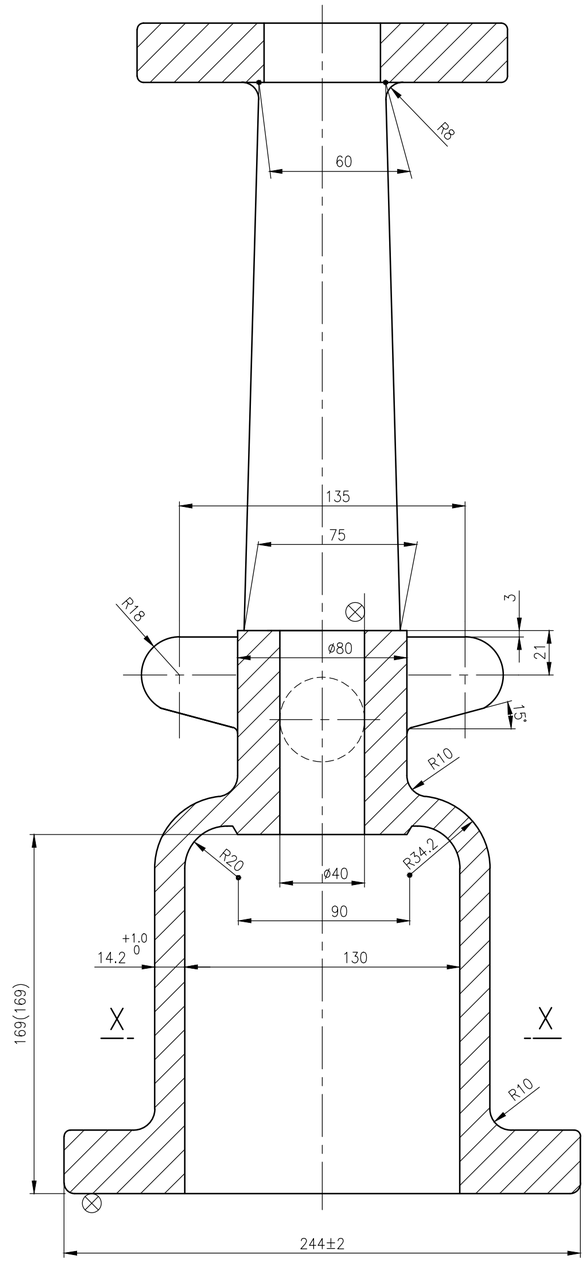


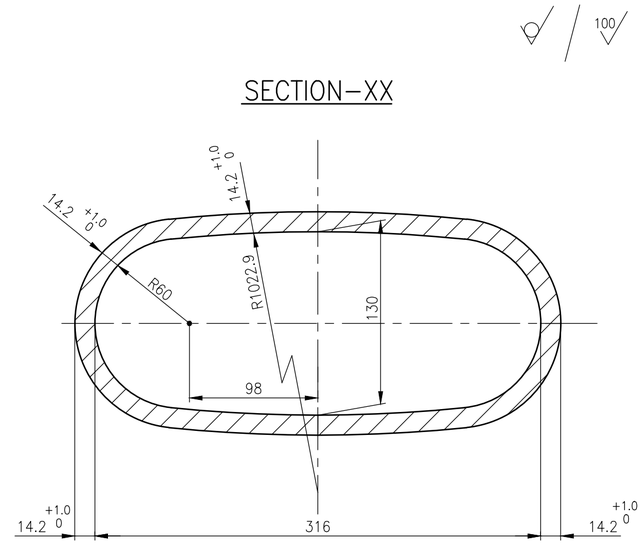


## NOTES:

1. NECESSARY ALLOWANCES HAVE BEEN ADDED ON ALL MACHINABLE SURFACES.
2. FOR PERMISSIBLE DIMENSIONAL DEVIATIONS OF NON TOLERANCED LATEST DIMENSIONS REFER LATEST APPLICABLE QUALITY WORK INSTRUCTIONS
3. FINISH MACHINED DIMENSIONS ARE INDICATED WITHIN BRACKETS FOR INFORMATION ONLY.
4. 100 INDICATES THE CASTINGSURFACES MUST BE OF HIGH QUALITY WITHOUT SURFACE UNEVENNESS.
5. UNSPECIFIED CASTING RADIOUS R3 MAX..
6. ⊗ THIS MARK INDICATES THE SURFACES TO BE MACHINED.
7. HEIGHT OF CASTING LETTERS 20mm.
8. CASTING SHALL COMPLY WITH THE REQUIREMENTS OF LATEST APPLICABLE QUALITY WORK INSTRUCTIONS PROCEDURE IN ALL RESPECTS.

* 9. CAST MATL. MARK "WCB" FOR A216 WCB AND "CF8M" FOR A351 CF8M MATL. "CF8" FOR A351 CF8 MATL.

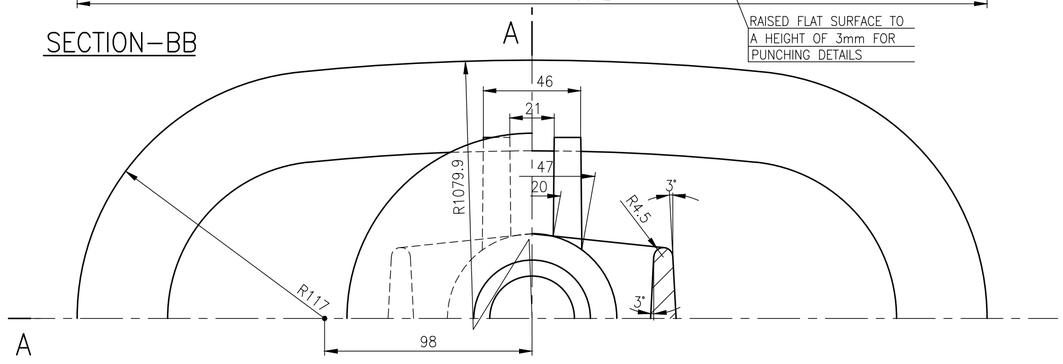


| SL. No. | DESCRIPTION | MATL CODE | MATL SPECN | HEAT TREATMENT | SCRAP SORT | NET WT (kg) | GROSS WT (kg) | DRAWING No / COMPONENT CODE | ITEM No |
|---|---|---|---|---|---|---|---|---|---|
| 03 | CASTING | – | A351 CF8 CERTIFY | SH | 46 | 44 | – | 2.V.ND79.14154R / 92 203 343 0000 | 006 |
| 02 | CASTING | – | A351 CF8M CERTIFY | SH | 46 | 44 | – | 2.V.ND61.14154R / 92 203 312 0000 | 006 |
| 01 | CASTING | – | A216 WCB CERTIFY | NORMALAISED | 10 | 44 | – | 2.V.NC76.14154R / 92 201 688 0000 | 006 |

| REV | DATE | ALTERED | |
|---|---|---|---|
| 03 | 20.12.14 | | A.MARIMUTHU |
| | | CHD & APPD | MS & SSK |
| ZONE | SL. No 03 INCLUDED | | |

CAUTION: The information on this document is the property of BHARAT HEAVY ELECTRICALS LTD. It must not be used directly or indirectly in any way detrimental to the interest of the company.

TYPE OF PRODUCT
OR NAME OF
CUSTOMER/PROJECT

BHARAT HEAVY ELECTRICALS LTD.,
UNIT: HIGH PRESSURE BOILER PLANT.
TIRUCHIRAPALLI -620014.
365-120

| | NAME | SIGN | DATE | NO.OF VAR. |
|---|---|---|---|---|
| DRN | A.S.PANDY | | 28.09.07 | |
| CHD | T.R.R.MURTHY | | 28.09.07 | |
| APPD | P.BOOMINATHAN | | 28.09.07 | |

| DEPT | SCALE | WEIGHT (KG). | REFERENCE INFORMATIONS | NO. OF ITEMS |
|---|---|---|---|---|
| VL | NTS | 44 | CAD REF.C214154R | |
| CODE 320 | | | | |

| TITLE | CARD CODE | DRAWING NO. | REV |
|---|---|---|---|
| YOKE CUM BONNET (10"–C150–GV–MO) | U 01 | 2–V–0000–14154R | 03 |

Size A2

DRAWING NO. 2-V-0000-14166R

ALL DIMENSIONS ARE IN MILLIMETRES. FOR TOLERANCES OF UNTOLERANCED DIMENSIONS DURING MANUFACTURE REFER RELEVANT QCP / QP

## SECTION – AA

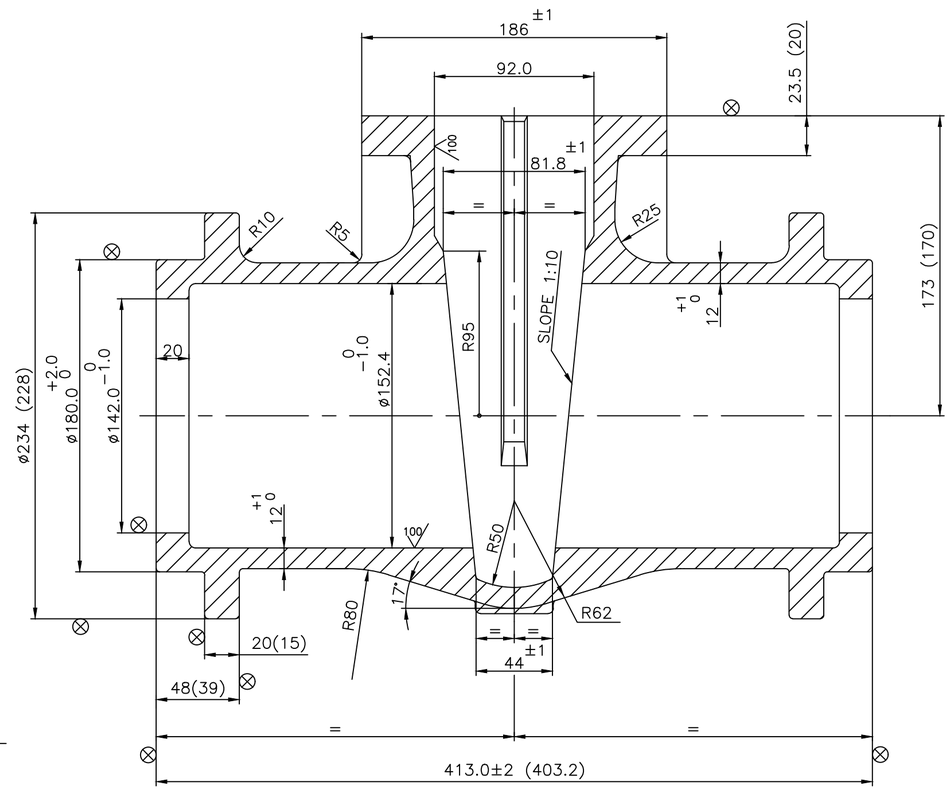


## SECTION – BB

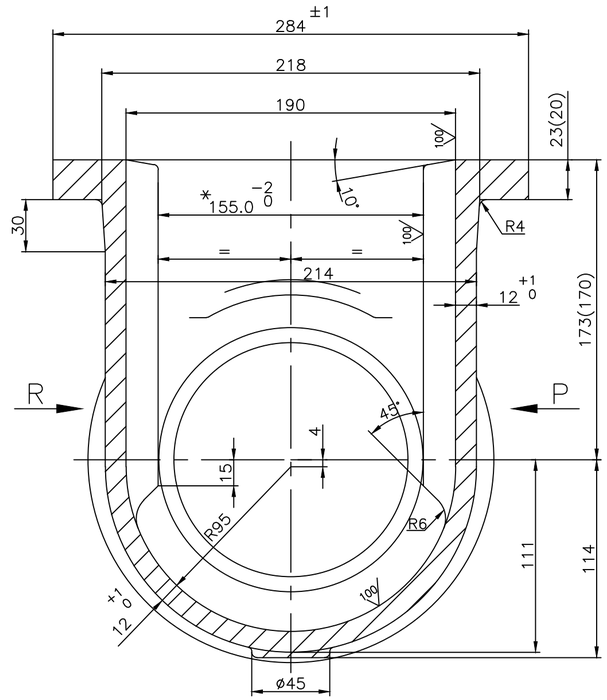


## VIEW – P

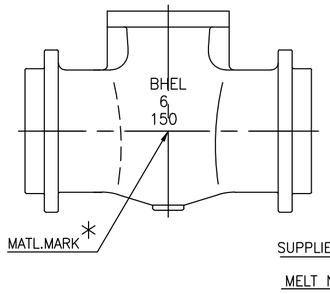


## VIEW – Q

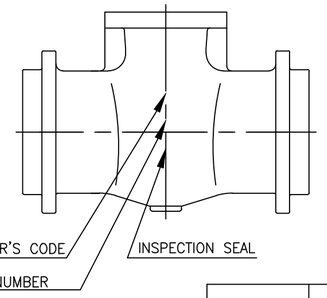


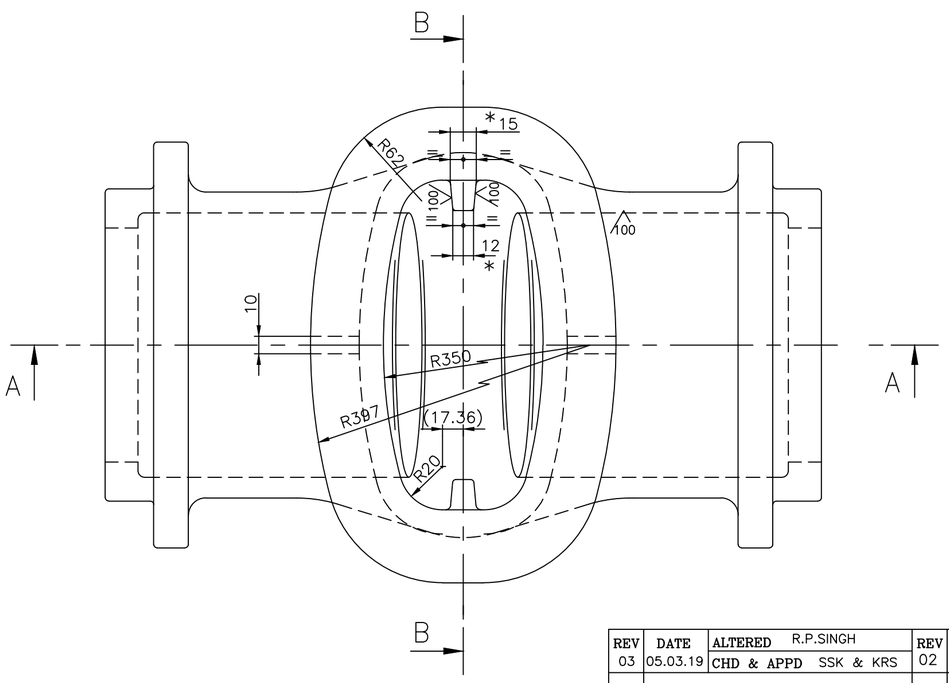


## NOTE

01. NECESSARY MACHINING ALLOWANCES HAVE BEEN ADDED ON ALL MACHINABLE SURFACES.
02. 100 INDICATED CASTING SURFACES SHALL BE OF HIGH QUALITY WITHOUT SURFACE UNEVENNESS.
03. FINISH MACHINED DIMENSIONS ARE INDICATED WITHIN BRACKETS FOR INFORMATION ONLY.
04. LETTERS– BHEL,SIZE,MATL.& SUPPLIERS CODE ARE TO BE CAST IN THE INDICATED ZONE.
05. CASTING SHALL COMPLY WITH THE REQUIREMENTS OF APPLICABLE SPECIFICATION.
06. UNSPECIFIED CASTING RADII = R2 TO R3
07. HEIGHT OF CASTING LETTERS = 12 mm
08. ⊗ INDICATES SURFACE TO BE MACHINED.
09. HEAT TREATMENT FOR ASME 995 CD3MN AS PER ASME STANDARD ASME–995 TABLE 1
(HEAT TO 2050°F [1120°C] MINIMUM FOR SUFFICIENT TIME TO HEAT CASTING UNIFORMLY TO TEMPERATURE AND WATER QUENCH, OR THE CASTING MAY BE FURNACE COOLED TO 1850°F [1010°C] MINIMUM, HOLD FOR 15 MIN MINIMUM AND THEN WATER QUENCH. A RAPID COOL BY OTHER MEANS MAY BE EMPLOYED IN LIEU OF WATER QUENCH.)

## * SPECIAL NOTE

01. GUIDE BAR DIMENSIONS TO BE MAINTAINED WITHIN THE TOLERENCE INDICATED.
02. BOTH GUIDE RIBS TO BE COPLANAR AND TRUELY VERTICAL.

| MATL.MARK * | SL No. | DESCRIPTION | MATL CODE | MATL SPECN | HEAT TREATMENT | SCRAP SORT | NET WT (kg) | GROSS WT (kg) | DRAWING No / COMPONENT CODE | ITEM No |
|---|---|---|---|---|---|---|---|---|---|---|
| CF3M | 05 | CASTING | – | SA 351 CF3M ATTEST | SH | – | 38.0 | – | 2.V.NP81.14166R / 922038790000 | 001 |
| CD3MN | 04 | CASTING | – | SA995 GR.CD3MN ATTEST | REFER NOTE | – | 38.0 | – | 2.V.NP53.14166R / 922035830000 | 001 |
| CF8 | 03 | CASTING | – | SA 351 CF8 ATTEST | SH | – | 38.0 | – | 2.V.ND72.14166R / 922033380000 | 001 |
| CF8M | 02 | CASTING | – | SA 351 CF8M ATTEST | SH | – | 38.0 | – | 2.V.ND10.14166R / 922031600000 | 001 |
| WCB | 01 | CASTING | – | SA216 WCB ATTEST | NR | – | 38.0 | – | 2.V.NC24.14166R / 922016950000 | 001 |

| REV | DATE | ALTERED | |
|---|---|---|---|
| 04 | 03.08.19 | R.P.SINGH | CHD & APPD SSK & KRS |
| | | SL.No.05 INCLUDED | |

| REV | DATE | ALTERED | |
|---|---|---|---|
| 03 | 05.03.19 | R.P.SINGH | CHD & APPD SSK & KRS |
| | | SL.No.04 INCLUDED<br>NOTE No.09 INCLUDED | |

| REV | DATE | ALTERED | |
|---|---|---|---|
| 02 | 27.2.14 | A.MARIMUTHU | CHD & APPD MS & SSK |
| | | SL.No.03 INCLUDED. | |

| REV | DATE | ALTERED | |
|---|---|---|---|
| 01 | 20.06.13 | M.S | CHD & APPD SSK & KRS |
| ZONE | | SL.NO. 02 INCLUDED | |

CAUTION: The information on this document is the property of BHARAT HEAVY ELECTRICALS LTD. It must not be used directly or indirectly in any way detrimental to the interest of the company.

TYPE OF PRODUCT
OR NAME OF
CUSTOMER/PROJECT

BHARAT HEAVY ELECTRICALS LTD.,
UNIT: HIGH PRESSURE BOILER PLANT.
TIRUCHIRAPALLI -620014.
365–120

| | NAME | SIGN | DATE | NO.OF VAR. |
|---|---|---|---|---|
| DRN | M.SRINIVASAN | | 28.08.07 | |
| CHD | P.BOOMINATHAN | | 28.08.07 | |
| APPD | M.RAJAKUAMR | | 28.08.07 | |

| DEPT | SCALE | WEIGHT (KG). | REFERENCE INFORMATIONS | NO. OF ITEMS |
|---|---|---|---|---|
| VL | NTS | 38.0 | CAD :C214166R | |

| CODE | TITLE | CARD CODE | DRAWING NO. | REV |
|---|---|---|---|---|
| 320 | BODY ( 6" – C150 – BW ) | U 01 | 2–V–0000–14166R | 04 |

Size A2

DRAWING NO. 2-V-0000-14171R

ALL DIMENSIONS ARE IN MILLIMETRES. FOR TOLERANCES OF UNTOLERANCED DIMENSIONS DURING MANUFACTURE REFER RELEVANT QCP / QP

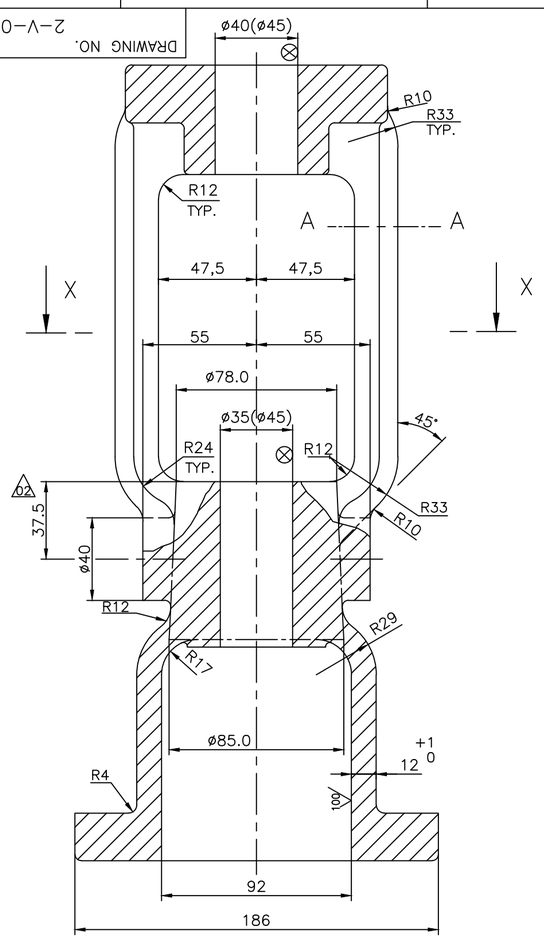


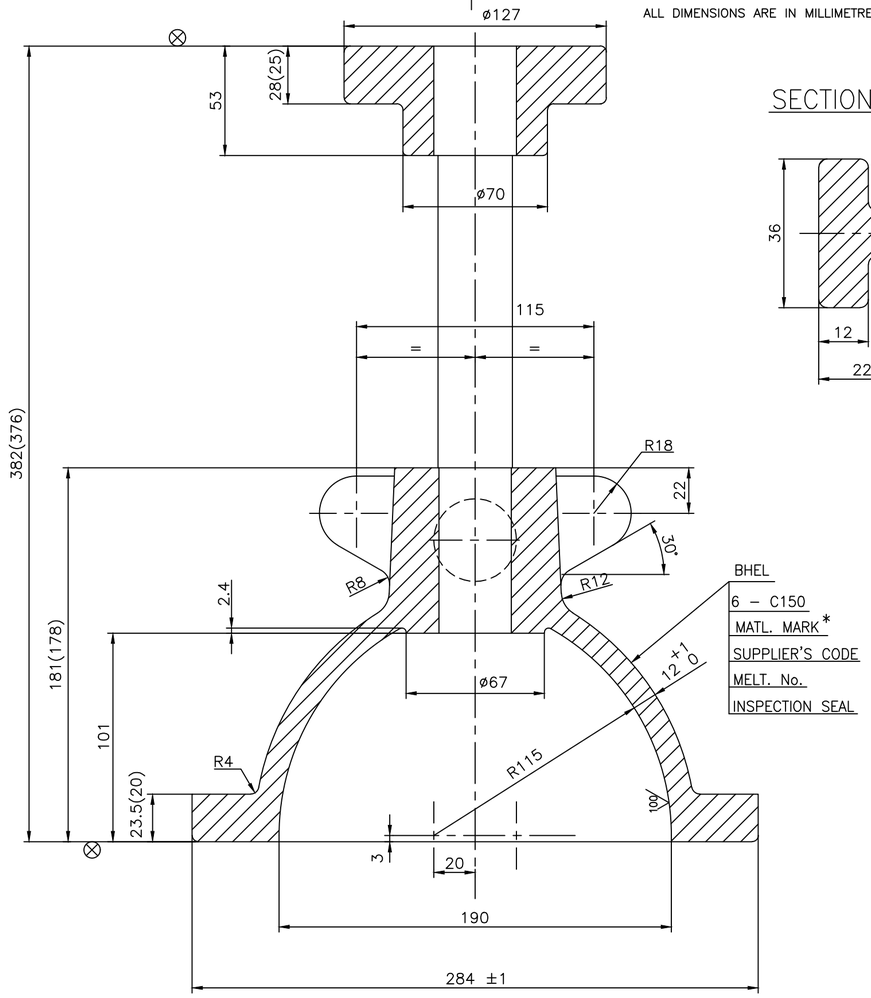


## SECTION AA

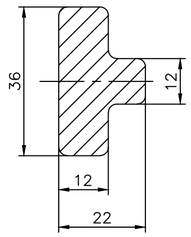


100

## NOTES–

01. NECESSARY MACHINING ALLOWANCES HAVE BEEN ADDED ON ALL MACHINABLE SURFACES.
02. PERMISSIBLE DEVIATIONS OF NON TOLERANCED CASTING DIMENSIONS REFER APPLICABLE TDC
03. FINISH MACHINED DIMENSIONS ARE INDICATED WITHIN BRACKETS FOR INFORMATION ONLY.
04. LETTERS– BHEL,SIZE,MATL.& SUPPLIERS CODE ARE TO BE CAST IN THE INDICATED ZONE.
05. CASTING SHALL COMPLY WITH THE REQUIREMENTS OF APPLICABLE TDC
06. UNSPECIFIED CASTING RADII = R3 TO R5
07. HEIGHT OF CASTING LETTERS = 15 mm
08. ⊗ INDICATES SURFACE TO BE MACHINED.
09. 100 INDICATED CASTING SURFACES SHALL BE OF HIGH QUALITY WITHOUT SURFACE UNEVENNESS.
10. HEAT TREATMENT FOR ASTM 995 CD3MN AS PER ASTM STANDARD ASTM–995 TABLE 1 (HEAT TO 2050°F [1120°C] MINIMUM FOR SUFFICIENT TIME TO HEAT CASTING UNIFORMLY TO TEMPERATURE AND WATER QUENCH, OR THE CASTING MAY BE FURNACE COOLED TO 1850°F [1010°C] MINIMUM, HOLD FOR 15 MIN MINIMUM AND THEN WATER QUENCH. A RAPID COOL BY OTHER MEANS MAY BE EMPLOYED IN LIEU OF WATER QUENCH.)
11. # MARKED ITEMS IGC TEST SHALL BE CONDUCTED

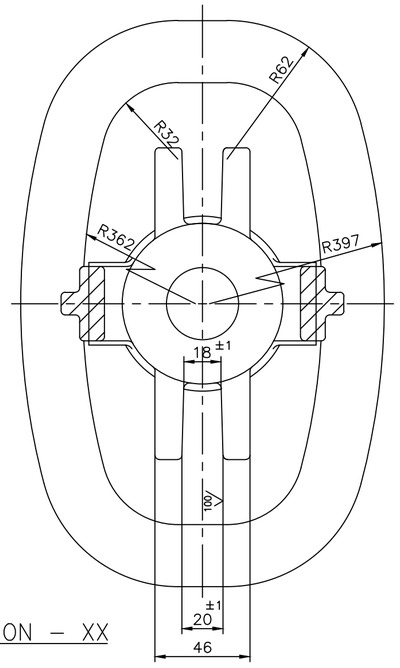


SECTION – XX

| MATL. MARK * | SL No. | DESCRIPTION | MATL CODE | MATL SPECN | HEAT TREATMENT | SCRAP SORT | NET WT (kg) | GROSS WT (kg) | DRAWING No / COMPONENT CODE | ITEM No |
|---|---|---|---|---|---|---|---|---|---|---|
| CF3M | 06 | CASTING | – | A351 CF3M CERTIFY | SH | – | 17.3 | – | 2.V.NP76.14171R / 92 203 850 0000 | 007 |
| CF8 | #05 | CASTING | – | A351 CF8 CERTIFY | SH | – | 17.3 | – | 2.V.U937.14171R / 92 203 750 0000 | 007 |
| CD3MN | 04 | CASTING | – | A995 Gr.CD3MN CERTIFY | REFER NOTE | – | 17.3 | – | 2.V.NP33.14171R/1 / 92 203 484 0000 | 007 |
| CF8 | 03 | CASTING | – | A351 CF8 CERTIFY | SH | – | 17.3 | – | 2.V.ND72.14171R / 92 203 341 0000 | 007 |
| CF8M | 02 | CASTING | – | A351 CF8M CERTIFY | SH | – | 17.3 | – | 2.V.ND10.14171R/1 / 92 203 161 0000 | 007 |
| WCB | 01 | CASTING | – | A216 WCB CERTIFY | NORMALISED | – | 17.3 | – | 2.V.NC64.14171R/1 / 92 201 700 0000 | 007 |

| REV | DATE | ALTERED | |
|---|---|---|---|
| 07 | 30.05.19 | R.P.SINGH | CHD & APPD SSK & KRS |
| | SL. No. 06 INCLUDED | | |
| 06 | 12.12.18 | R.P.SINGH | CHD & APPD SSK & KRS |
| | SL. No. 05 INCLUDED<br>NOTES No. 11 INLCUDED | | |
| 05 | 25.01.18 | R.P.SINGH | CHD & APPD SSK & KRS |
| | FOR SL.NO.04 MATERIAL SPECIFICATION CHANGED TO CD3MN FROM 6A<br>NOTE SL.NO.10 HEAT TREATMENT PROCESS REVISED | | |
| 04 | 14.06.17 | T.SANGEETHA | CHD & APPD SSK & KRS |
| | SL.No. 04 INCLUDED | | |
| 03 | 27.12.14 | MARIMUTHU | CHD & APPD MS & SSK |
| | SL.No. 03 INCLUDED | | |
| 02 | 21.08.14 | MARIMUTHU | CHD & APPD MS & SSK |
| | DIMENSION 37.5 INCLUDED.<br>DCP: 801794 | | |
| 01 | 20.06.13 | M.S | CHD & APPD SSK & KRS |
| | SL.No. 02 INCLUDED | | |

ZONE

CAUTION: The information on this document is the property of BHARAT HEAVY ELECTRICALS LTD. It must not be used directly or indirectly in any way detrimental to the interest of the company.

TYPE OF PRODUCT
OR NAME OF
CUSTOMER/PROJECT

BHARAT HEAVY ELECTRICALS LTD.,
UNIT: HIGH PRESSURE BOILER PLANT.
TIRUCHIRAPALLI -620014.
365–120

| | NAME | SIGN | DATE | NO.OF VAR. |
|---|---|---|---|---|
| DRN | M.SRINIVASAN | | 03.09.07 | |
| CHD | P.BOOMINATHAN | | 03.09.07 | |
| APPD | M.RAJAKUMAR | | 03.09.07 | |

DEPT VL
CODE 320
SCALE NTS
WEIGHT (KG). REF. TABLE
REFERENCE INFORMATIONS
CAD:C214171R
NO. OF ITEMS

TITLE
YOKE CUM BONNET
(6–C150)

CARD CODE U 01

DRAWING NO. 2–V–0000–14171R

REV 07

Size A2

DRAWING NO. 2-V-0000-14220R

ALL DIMENSIONS ARE IN MILLIMETRES. FOR TOLERANCES OF UNTOLERANCED DIMENSIONS DURING MANUFACTURE REFER RELEVANT QCP / QP

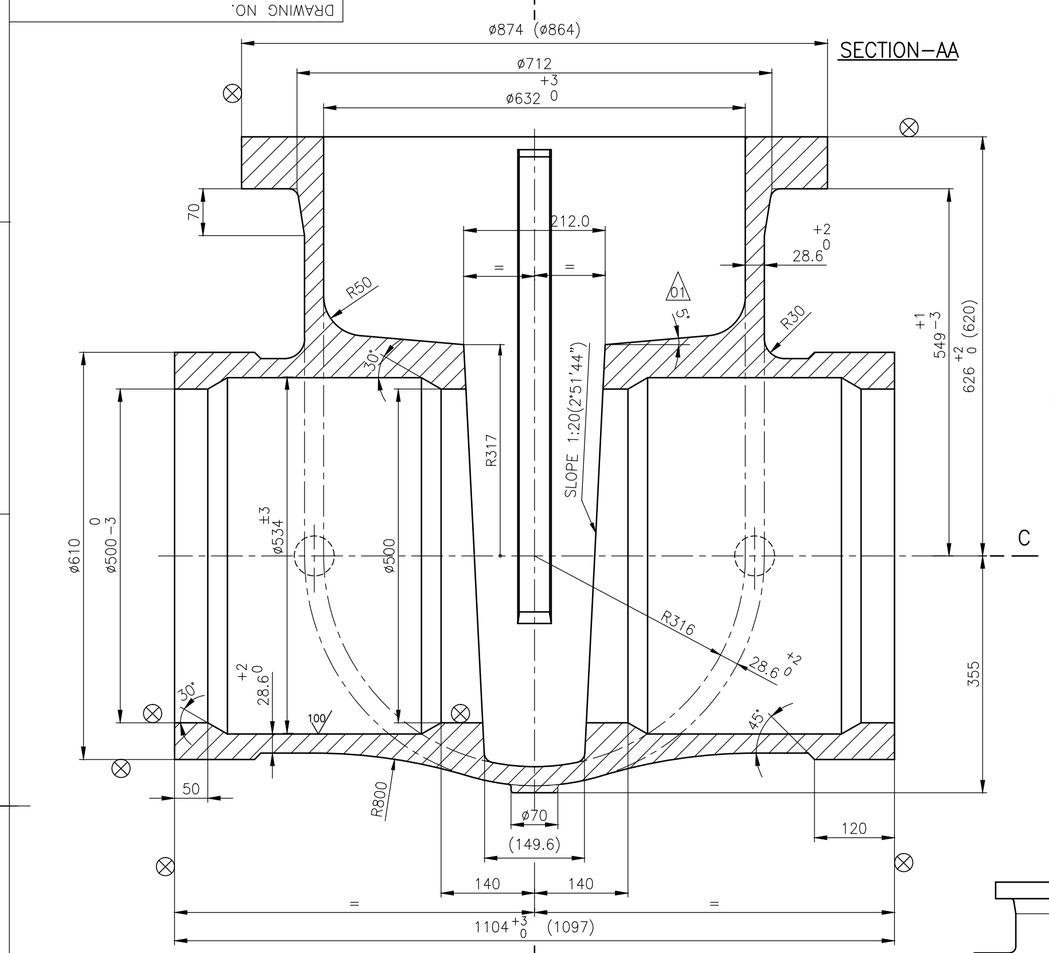


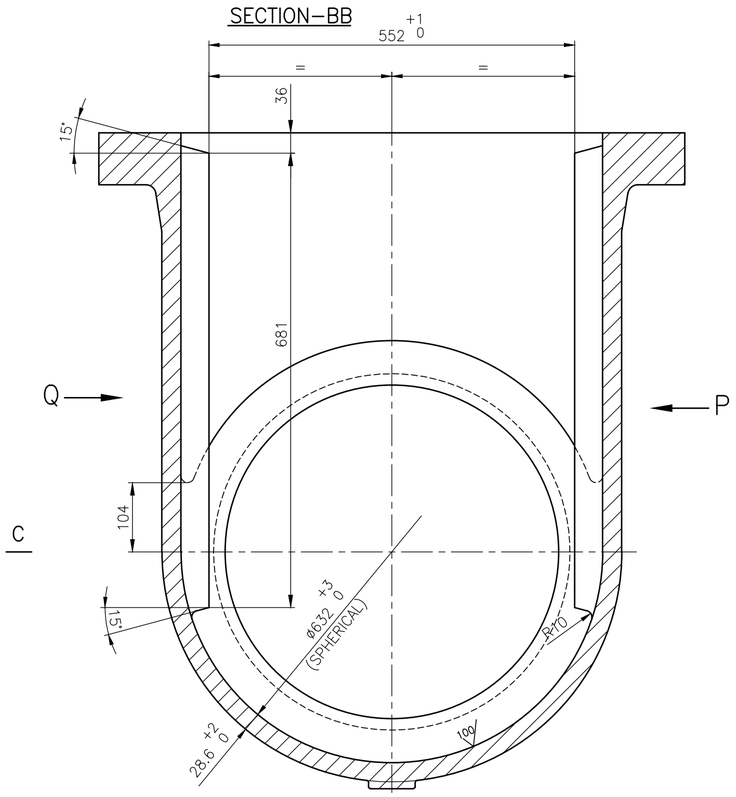


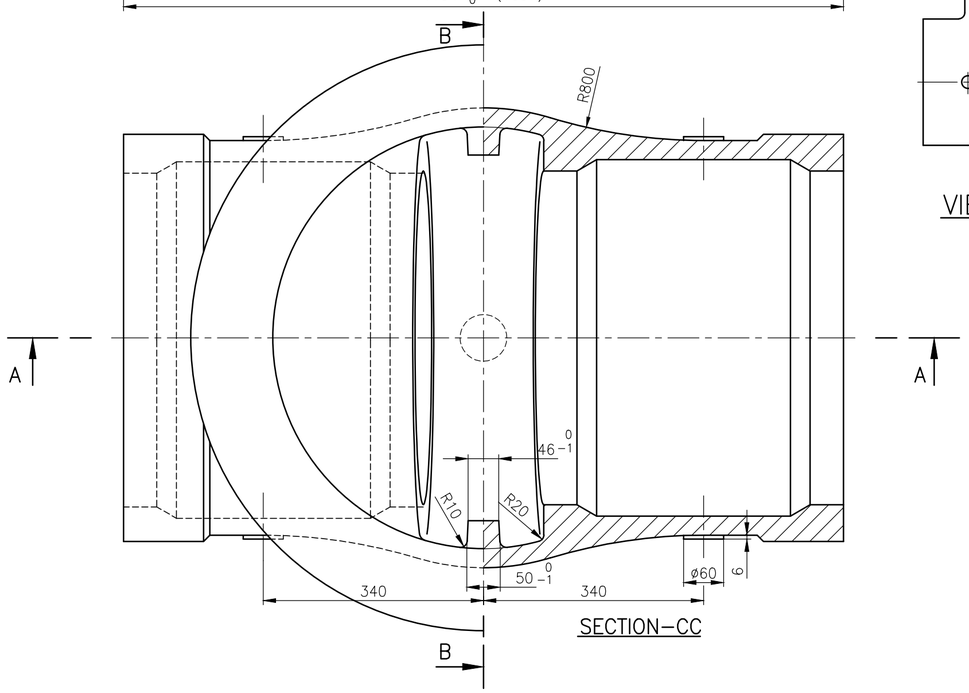


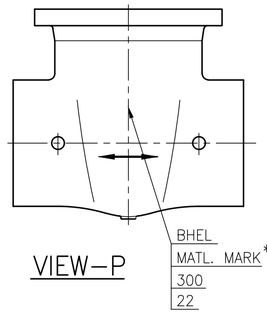


VIEW–P

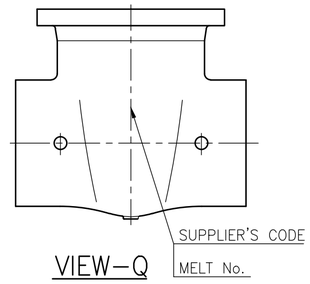


VIEW–Q

## NOTE

01. NECESSARY MACHINING ALLOWANCES HAVE BEEN ADDED ON ALL MACHINABLE SURFACES.
02. PERMISSIBLE DEVIATIONS OF NON TOLERANCED CASTING DIMENSIONS REFER APPLICABLE TDC
03. FINISH MACHINED DIMENSIONS ARE INDICATED WITHIN BRACKETS FOR INFORMATION ONLY.
04. THE EMBOSSING OF BHEL, MATL. MARK, RATING & SIZE SHALL BE DONE STRICTLY AS PER THE SEQUENCE SHOWN IN VIEW–P
05. CASTING SHALL COMPLY WITH THE REQUIREMENTS OF APPLICABLE SPECIFICATION.
06. UNSPECIFIED CASTING RADII = R5
07. HEIGHT OF CASTING LETTERS = 30 mm
08. ⊗ INDICATES SURFACE TO BE MACHINED.
09. 100 INDICATED CASTING SURFACES SHALL BE OF HIGH QUALITY WITHOUT SURFACE UNEVENNESS.

## * SPECIAL NOTE

01. GUIDE BAR DIMENSIONS TO BE MAINTAINED WITHIN THE TOLERENCE INDICATED.
02. BOTH GUIDE RIBS TO BE COPLANAR AND TRUELY VERTICAL.

| MATL.MARK* | SL. No. | DESCRIPTION | MATL CODE | MATL SPECN | HEAT TREATMENT | SCRAP SORT | NET WT (kg) | GROSS WT (kg) | DRAWING No / COMPONENT CODE | ITEM No |
|---|---|---|---|---|---|---|---|---|---|---|
| WC9 | 02 | CASTING | 92 201 745 | ASTM A217 WC9– ATTEST | NORMALISED & TEMPERED | – | 795 | – | 2.V.NE97.14220R/1 / 92 201 745 0000 | 001 |
| WCB | 01 | CASTING | 92 201 744 | ASTM A216 WCB– ATTEST | NORMALISED | – | 795 | – | 2.V.NE96.14220R/1 / 92 201 744 0000 | 001 |

| REV | DATE | ALTERED | M.SRINIVASAN |
|---|---|---|---|
| 01 | 28.09.12 | CHD & APPD | SSK & KRS |
| ZONE | DIMENSION TAPER 5° INCLUDED. DCP:801396 | | |

CAUTION: The information on this document is the property of BHARAT HEAVY ELECTRICALS LTD. It must not be used directly or indirectly in any way detrimental to the interest of the company.

TYPE OF PRODUCT OR NAME OF CUSTOMER/PROJECT

BHARAT HEAVY ELECTRICALS LTD., UNIT: HIGH PRESSURE BOILER PLANT. TIRUCHIRAPALLI -620014. 365–120

| | NAME | SIGN | DATE | NO.OF VAR. |
|---|---|---|---|---|
| DRN | M.SRINIVASAN | | 24.03.08 | |
| CHD | P.BOOMINATHAN | | 24.03.08 | |
| APPD | M.RAJAKUAMR | | 24.03.08 | |

| DEPT | SCALE | WEIGHT (KG). | REFERENCE INFORMATIONS | NO. OF ITEMS |
|---|---|---|---|---|
| VL / CODE 320 | NTS | REF. TABLE | CAD :C214220R | |

| TITLE | CARD CODE | DRAWING NO. | REV |
|---|---|---|---|
| BODY ( 22" – C300 – BW ) | U 01 | 2–V–0000–14220R | 01 |

Size A2

DRAWING NO. 2-V-0000-14233R

ALL DIMENSIONS ARE IN MILLIMETRES. FOR TOLERANCES OF UNTOLERANCED DIMENSIONS DURING MANUFACTURE REFER RELEVANT QCP / QP

## SECTION – AA

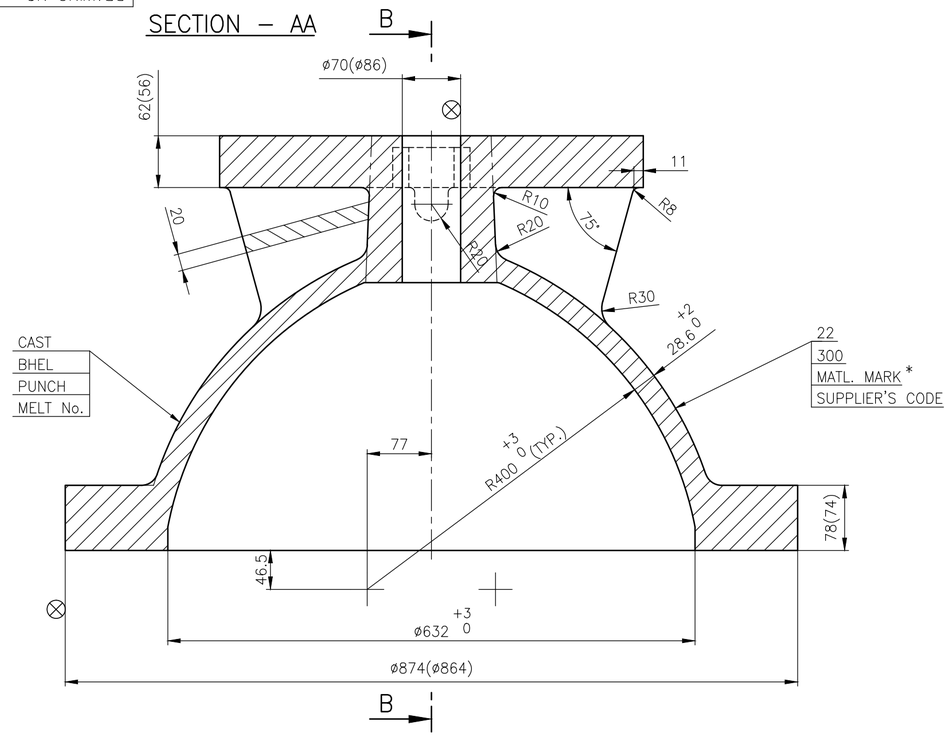


## SECTION – BB

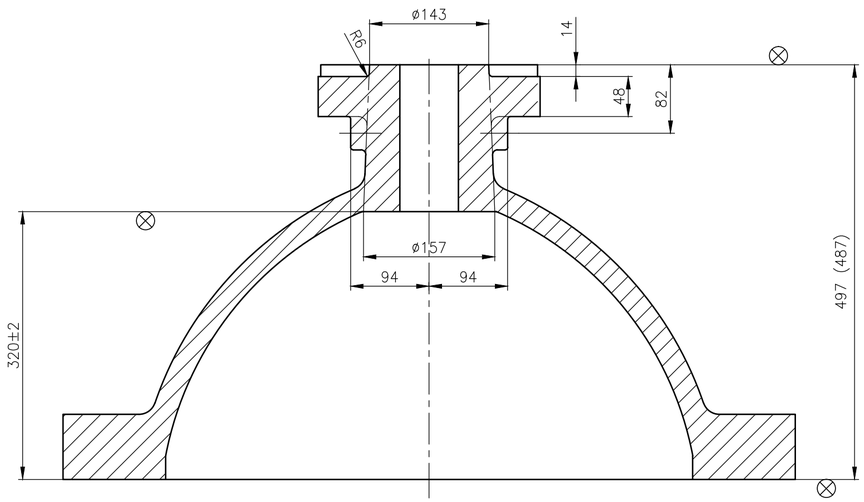


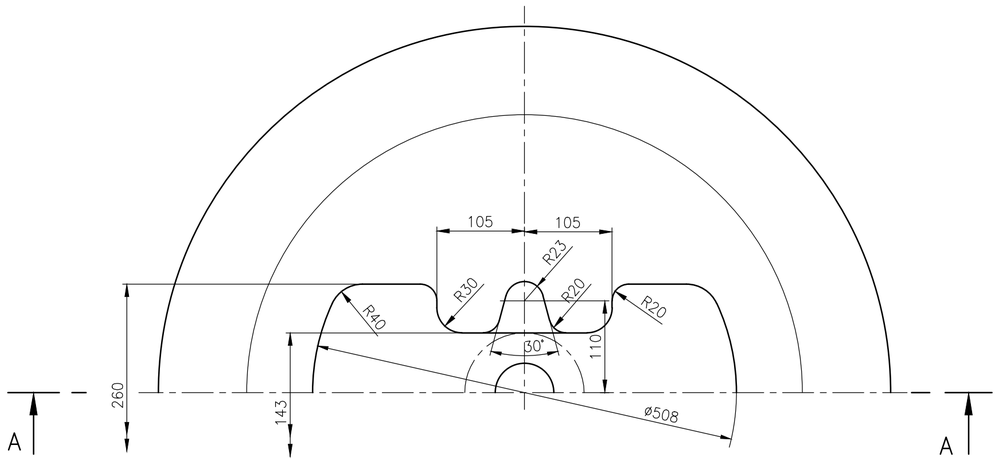


## NOTE

01. NECESSARY MACHINING ALLOWANCES HAVE BEEN ADDED ON ALL MACHINABLE SURFACES.

02. FOR PERMISSIBLE DEVIATIONS ON NON TOLERANCED CASTING DIMENSION REFER APPLICABLE QUALITY PROCEDURE.

03. FINISH MACHINED DIMENSIONS ARE INDICATED WITHIN BRACKETS FOR INFORMATION ONLY.

04. LETTERS– SIZE,MATL.& SUPPLIERS CODE ARE TO BE CAST IN THE INDICATED ZONE.

05. CASTING SHALL COMPLY WITH THE REQUIREMENTS OF APPLICABLE QUALITY PROCEDURE.

06. UNSPECIFIED CASTING RADII = R5

07. HEIGHT OF CASTING LETTERS = 25 mm

08. ⊗ INDICATES SURFACE TO BE MACHINED.

| MATL.MARK * | SL. No. | DESCRIPTION | MATL CODE | MATL SPECN | HEAT TREATMENT | SCRAP SORT | NET WT (kg) | GROSS WT (kg) | DRAWING No / COMPONENT CODE | ITEM No |
|---|---|---|---|---|---|---|---|---|---|---|
| WC9 | 02 | CASTING | 92 201 752 | ASTM A217 WC9– CERTIFY | NORMALISED & TEMPERED | – | 330.0 | – | 2.V.NE97.14233R/01 / 92 201 752 0000 | 011 |
| WCB | 01 | CASTING | 92 201 751 | ASTM A216 WCB– CERTIFY | NORMALISED | – | 330.0 | – | 2.V.NE96.14233R/01 / 92 201 751 0000 | 011 |

TYPE OF PRODUCT
OR NAME OF
CUSTOMER/PROJECT

CAUTION: The information on this document is the property of BHARAT HEAVY ELECTRICALS LTD. It must not be used directly or indirectly in any way detrimental to the interest of the company.

BHARAT HEAVY ELECTRICALS LTD.,
UNIT: HIGH PRESSURE BOILER PLANT.
TIRUCHIRAPALLI -620014.
365–120

| | NAME | SIGN | DATE | NO.OF VAR. |
|---|---|---|---|---|
| DRN | M.SRINIVASAN | | 24.03.08 | |
| CHD | P.BOOMINATHAN | | 24.03.08 | |
| APPD | M.RAJAKUMAR | | 24.03.08 | |

| REV | DATE | ALTERED | M.SRINIVASAN |
|---|---|---|---|
| 01 | 28.09.12 | CHD & APPD | SSK & KRS |

ZONE

DRAWING CONVERTED INTO AUTOCAD.

DCP:801396

DEPT VL
CODE 320
SCALE NTS
WEIGHT (KG). REF TABLE
REFERENCE INFORMATIONS
CAD :C214233R
NO. OF ITEMS

TITLE
BONNET
( 22"–C300 )

CARD CODE U 01

DRAWING NO. 2–V–0000–14233R

REV 01

Size A2

DRAWING NO. 2-V-0000-14235R

ALL DIMENSIONS ARE IN MILLIMETRES. FOR TOLERANCES OF UNTOLERANCED DIMENSIONS DURING MANUFACTURE REFER RELEVANT QCP / QP

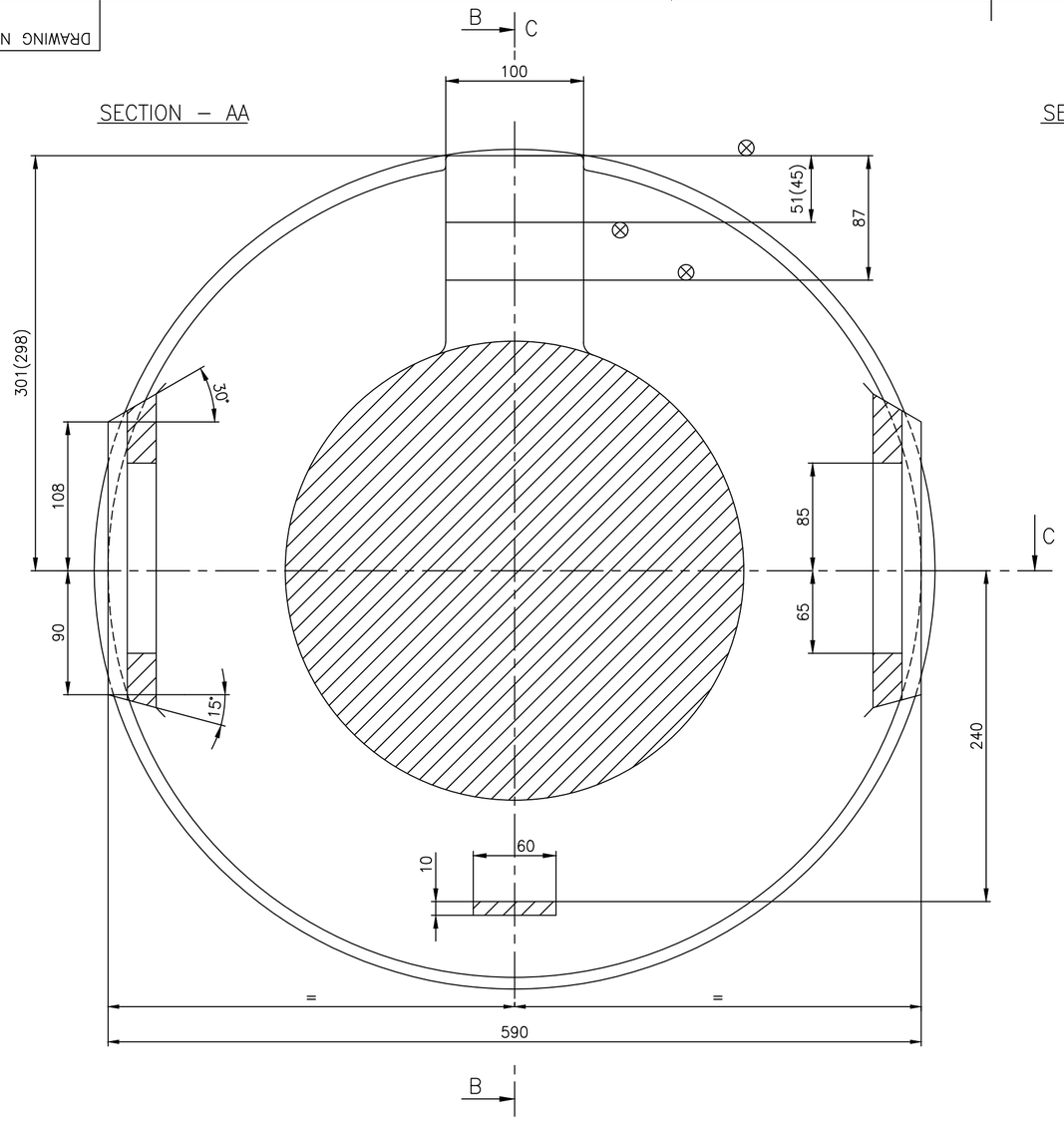


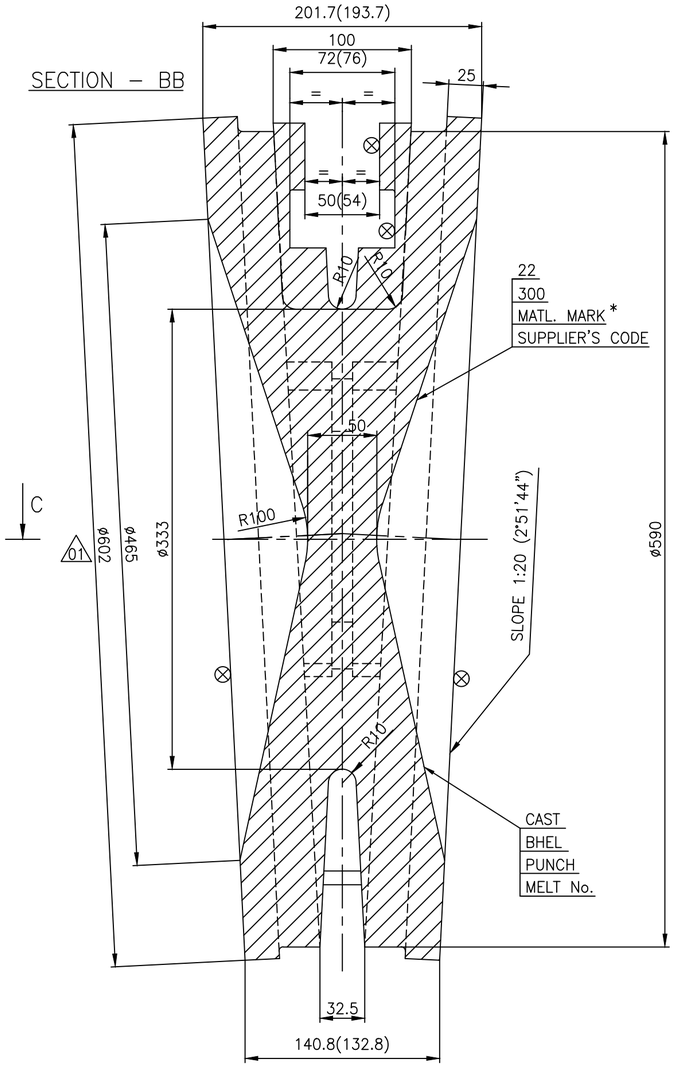


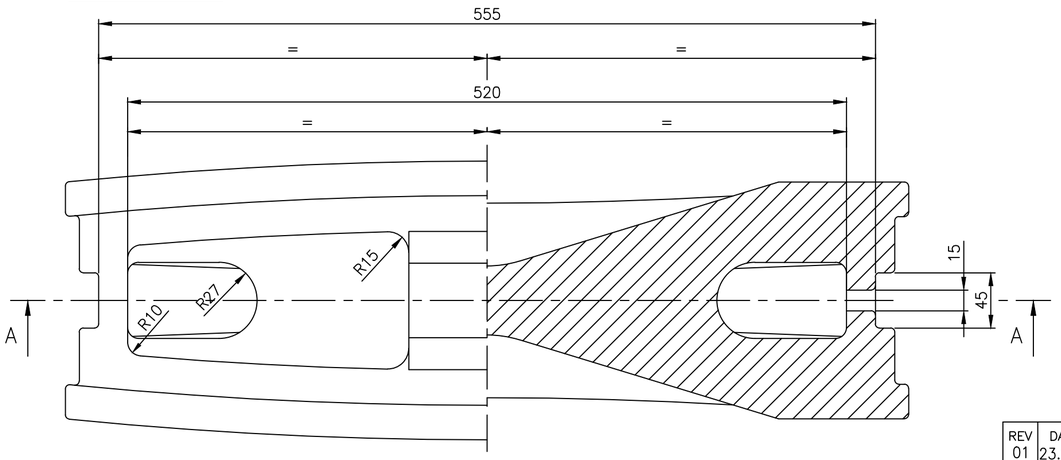


## NOTE

01. NECESSARY MACHINING ALLOWANCES HAVE BEEN ADDED ON ALL MACHINABLE SURFACES.
02. FOR PERMISSIBLE DEVIATIONS ON NON TOLERANCED CASTING DIMENSION REFER APPLICABLE QUALITY PROCEDURE.
03. FINISH MACHINED DIMENSIONS ARE INDICATED WITHIN BRACKETS FOR INFORMATION ONLY.
04. LETTERS– SIZE,MATL.& SUPPLIERS CODE ARE TO BE CAST IN THE INDICATED ZONE.
05. CASTING SHALL COMPLY WITH THE REQUIREMENTS OF APPLICABLE QUALITY PROCEDURE.
06. UNSPECIFIED CASTING RADII = R3 TO R5
07. HEIGHT OF CASTING LETTERS = 8 mm
08. ⊗ INDICATES SURFACE TO BE MACHINED.

| MATL.MARK* | SL No. | DESCRIPTION | MATL CODE | MATL SPECN | HEAT TREATMENT | SCRAP SORT | NET WT (kg) | GROSS WT (kg) | DRAWING No / COMPONENT CODE | ITEM No |
|---|---|---|---|---|---|---|---|---|---|---|
| WC9 | 02 | CASTING | 92 201 747 | ASTM A217 WC9– CERTIFY | NORMALISED & TEMPERED | – | 214 | – | 2-V-NE97-14235R/1 92 201 747 0000 | 007 |
| WCB | 01 | CASTING | 92 201 746 | ASTM A216 WCB– CERTIFY | NORMALISED | – | 214 | – | 2-V-NE96-14235R/1 92 201 746 0000 | 007 |

| REV | DATE | ALTERED RAVI PRATAP SINGH |
|---|---|---|
| 01 | 23.10.17 | CHD & APPD SSK & KRS |
| ZONE | DIMENSIONS ø602 WAS ø610 | |

CAUTION: The information on this document is the property of BHARAT HEAVY ELECTRICALS LTD. It must not be used directly or indirectly in any way detrimental to the interest of the company.

TYPE OF PRODUCT
OR NAME OF
CUSTOMER/PROJECT

BHARAT HEAVY ELECTRICALS LTD.,
UNIT: HIGH PRESSURE BOILER PLANT.
TIRUCHIRAPALLI -620014.
365–120

| | NAME | SIGN | DATE | NO.OF VAR. |
|---|---|---|---|---|
| DRN | M.SRINIVASAN | | 24.03.08 | |
| CHD | P.BOOMINATHAN | | 24.03.08 | |
| APPD | M.RAJAKUMAR | | 24.03.08 | |

DEPT VL
CODE 320
SCALE NTS
WEIGHT (KG). REF TABLE
REFERENCE INFORMATIONS
CAD :C214235R
NO. OF ITEMS

TITLE
# WEDGE
( 22"–C300 )

CARD CODE U 01

DRAWING NO. 2-V-0000-14235R

REV 01

Size A2

DRAWING NO. 2-V-0000-14275R

ALL DIMENSIONS ARE IN MILLIMETRES. FOR TOLERANCES OF UNTOLERANCED DIMENSIONS DURING MANUFACTURE REFER RELEVANT QCP / QP

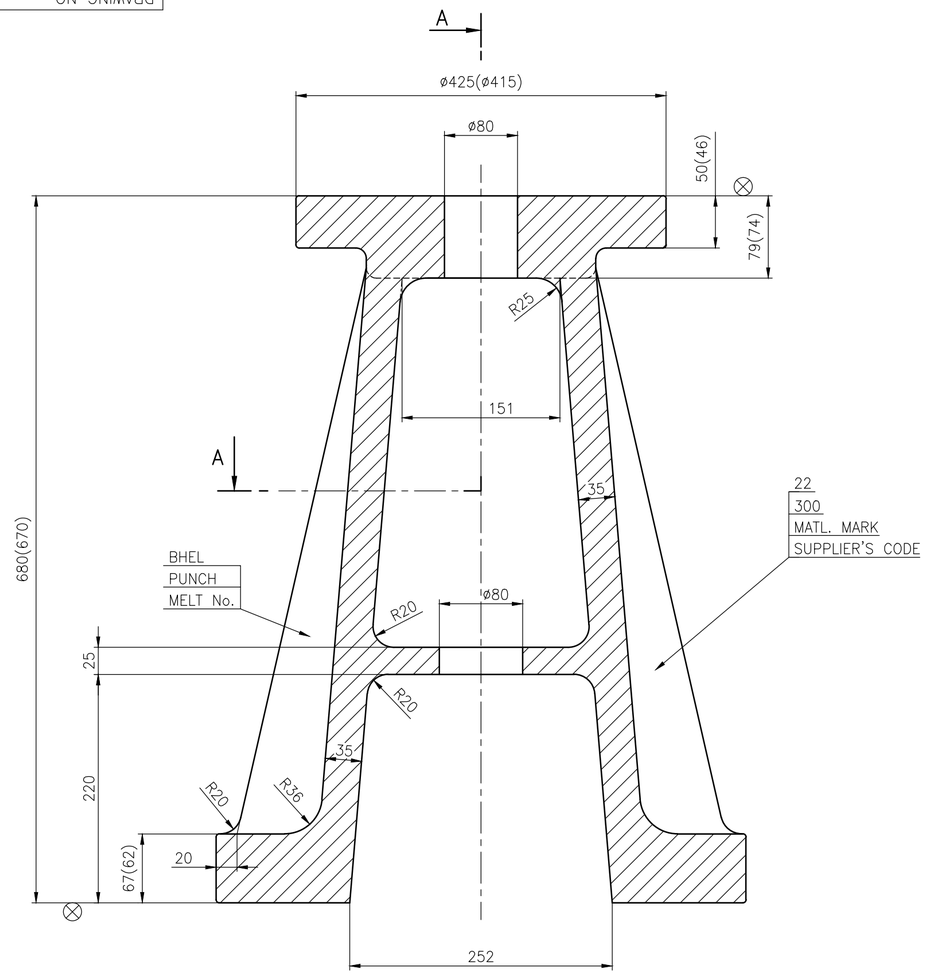


SECTION–CC

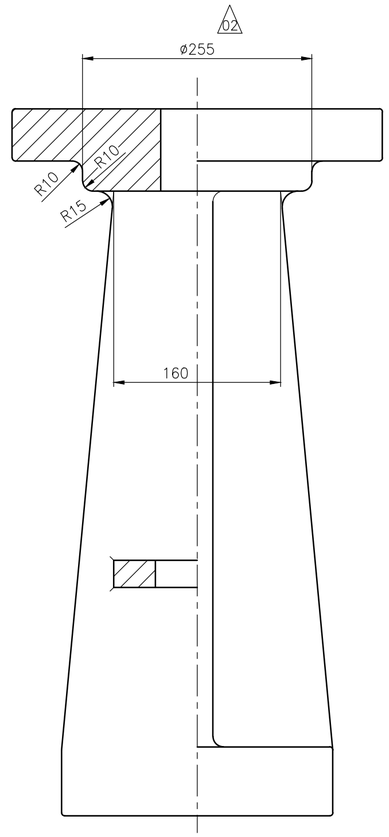


SECTION–BB

## NOTE

01. NECESSARY MACHINING ALLOWANCES HAVE BEEN ADDED ON ALL MACHINABLE SURFACES.
02. FOR PERMISSIBLE DEVIATIONS ON NON TOLERANCED CASTING DIMENSION REFER APPLICABLE QUALITY PROCEDURE.
03. FINISH MACHINED DIMENSIONS ARE INDICATED WITHIN BRACKETS FOR INFORMATION ONLY.
04. LETTERS– SIZE,MATL.& SUPPLIERS CODE ARE TO BE CAST IN THE INDICATED ZONE.
05. CASTING SHALL COMPLY WITH THE REQUIREMENTS OF APPLICABLE QUALITY PROCEDURE.
06. UNSPECIFIED CASTING RADII = R5
07. HEIGHT OF CASTING LETTERS = 25 mm
08. ⊗ INDICATES SURFACE TO BE MACHINED.

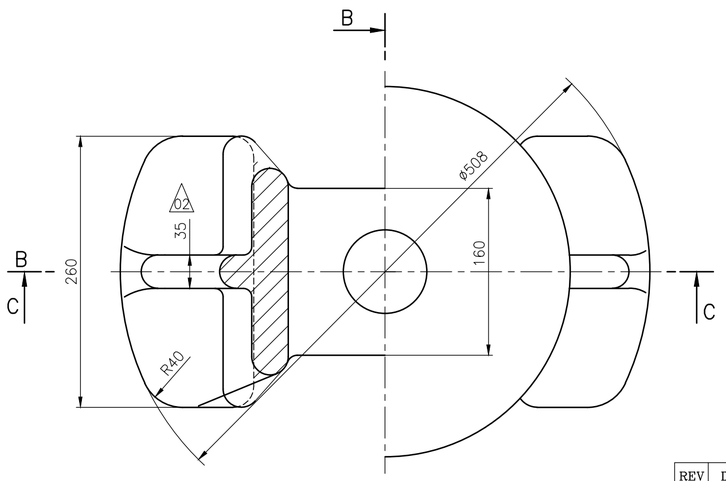


SECTION–AA

| REV | DATE | ALTERED | |
|---|---|---|---|
| 02 | 28.09.12 | M.SRINIVASAN<br>CHD & APPD SSK & KRS | DIMENSION ø255 WAS ø220 AND DIMENSION 35 INCLUDED.<br>DCP:801396 |
| 01 | 30.12.09 | M.SRINIVASAN<br>CHD & APPD M.RAJAKUMAR | DIMENSION ø425 (ø415) WAS ø355(ø347)<br>DCP:801016 |

ZONE

| SL. No. | DESCRIPTION | MATL CODE | MATL SPECN | HEAT TREATMENT | SCRAP SORT | NET WT (kg) | GROSS WT (kg) | DRAWING No / COMPONENT CODE | ITEM No |
|---|---|---|---|---|---|---|---|---|---|
| 01 | CASTING | 92 201 753 | ASTM A216 WCB– CERTIFY | NORMALISED | – | 177 | – | 2.V.NE96.14275R/02<br>92 201 753 0000 | 027 |

TYPE OF PRODUCT
OR NAME OF
CUSTOMER/PROJECT

BHARAT HEAVY ELECTRICALS LTD.,
UNIT: HIGH PRESSURE BOILER PLANT.
TIRUCHIRAPALLI -620014.
365–120

| | NAME | SIGN | DATE | NO.OF VAR. |
|---|---|---|---|---|
| DRN | M.SRINIVASAN | | 24.03.08 | |
| CHD | P.BOOMINATHAN | | 24.03.08 | |
| APPD | M.RAJAKUMAR | | 24.03.08 | |

DEPT VL
CODE 320
SCALE NTS
WEIGHT (KG). REF TABLE
REFERENCE INFORMATIONS
CAD :C214275R
NO. OF ITEMS

TITLE
YOKE
( 22"–C300 )

CARD CODE U 01

DRAWING NO. 2–V–0000–14275R

REV 02

Size A2

CAUTION: The information on this document is the property of BHARAT HEAVY ELECTRICALS LTD. It must not be used directly or indirectly in any way detrimental to the interest of the company.

DRAWING NO. 2-V-0000-14526P

ALL DIMENSIONS ARE IN MILLIMETRES. FOR TOLERANCES OF UNTOLERANCED DIMENSIONS DURING MANUFACTURE REFER RELEVANT QCP / QP

| SL. No. | DRAWING NUMBER | MATL.SPECN. | *MATL. MARK | MATERIAL CODE | Wt.(kg) | DIMENSIONS | | | APPLICABLE VALVES |
|---|---|---|---|---|---|---|---|---|---|
| | | | | | | øD | ød | T | |
| 01 | 2-V-N025-14526P | A105 NR, CERTIFY | A105 | 92 201 913 | 0.62 | 98 | 70 | 23 | 3"-150C-GV |
| 02 | 2-V-N033-14526P | A105 NR, CERTIFY | A105 | 92 201 914 | 1.06 | 132 | 94 | 20 | 4"-300C-GV |
| 03 | 2-V-N001-14526P | A105 NR, CERTIFY | A105 | 92 201 915 | 1.90 | 178 | 145 | 30 | 6"-150C-GV |
| 04 | 2-V-N009-14526P | A105 NR, CERTIFY | A105 | 92 201 916 | 2.70 | 232 | 195 | 29 | 8"-150C-GV |
| 05 | 2-V-N057-14526P | A105 NR, CERTIFY | A105 | 92 201 917 | 3.63 | 286 | 246 | 29 | 10"-150C-GV |
| 06 | 2-V-N041-14526P | A105 NR, CERTIFY | A105 | 92 201 918 | 4.40 | 338 | 297 | 29 | 12"-150C-GV |
| 07 | 2-V-N017-14526P | A105 NR, CERTIFY | A105 | 92 201 919 | 2.50 | 188 | 145 | 30 | 6"-300C-GV |
| 08 | 2-V-N089-14526P | A105 NR, CERTIFY | A105 | 92 201 920 | 3.5 | 242 | 195 | 29 | 8"-300C-GV |
| 09 | 2-V-N065-14526P | A105 NR, CERTIFY | A105 | 92 201 921 | 5.24 | 302 | 246 | 29 | 10"-300C-GV |
| 10 | 2-V-N105-14526P | A105 NR, CERTIFY | A105 | 92 201 922 | 5.60 | 348 | 297 | 29 | 12"-300C-GV |
| 11 | 2-V-N297-14526P | A182 F22CL3. NT, CERTIFY | F22 | 92 201 923 | 1.06 | 132 | 94 | 20 | 4"-150C-GV |
| 12 | 2-V-N306-14526P | A182 F22CL3. NT, CERTIFY | F22 | 92 201 924 | 1.9 | 178 | 145 | 30 | 6"-150C-GV |
| 13 | 2-V-N274-14526P | A182 F22CL3. NT, CERTIFY | F22 | 92 201 925 | 2.70 | 232 | 195 | 29 | 8"-150C-GV |
| 14 | 2-V-N305-14526P | A182 F22CL3. NT, CERTIFY | F22 | 92 201 926 | 3.63 | 286 | 246 | 29 | 10"-150C-GV |
| 15 | 2-V-N258-14526P | A182 F22CL3. NT, CERTIFY | F22 | 92 201 927 | 0.62 | 98 | 70 | 23 | 3"-300C-GV |
| 16 | 2-V-N229-14526P | A182 F22CL3. NT, CERTIFY | F22 | 92 201 928 | 2.5 | 188 | 145 | 30 | 6"-300C-GV |
| 17 | 2-V-N230-14526P | A182 F22CL3. NT, CERTIFY | F22 | 92 201 929 | 3.5 | 242 | 195 | 29 | 8"-300C-GV |
| 18 | 2-V-N304-14526P | A182 F22CL3. NT, CERTIFY | F22 | 92 201 930 | 5.24 | 302 | 246 | 29 | 10"-300C-GV |
| 19 | 2-V-N309-14526P | A182 F22CL3. NT, CERTIFY | F22 | 92 201 931 | 5.60 | 348 | 297 | 29 | 12"-300C-GV |
| 20 | 2-V-F502-14526P | A105 NR, CERTIFY | A105 | 92 201 932 | 0.98 | 102 | 60 | 27 | 3"-600C-GV |
| 21 | 2-V-F532-14526P | A182 F22CL3. NT, CERTIFY | F22 | 92 201 933 | 0.98 | 102 | 60 | 27 | 3"-600C-GV |
| 22 | 2-V-F503-14526P | A105 NR, CERTIFY | A105 | 92 201 934 | 1.67 | 130 | 86 | 30 | 4"-600C-GV |
| 23 | 2-V-F533-14526P | A182 F22CL3. NT, CERTIFY | F22 | 92 201 935 | 1.67 | 130 | 86 | 30 | 4"-600C-GV |
| 24 | 2-V-F504-14526P | A105 NR, CERTIFY | A105 | 92 201 936 | 3.8 | 184 | 136 | 42 | 6"-600C-GV |
| 25 | 2-V-F534-14526P | A182 F22CL3. NT, CERTIFY | F22 | 92 201 937 | 3.8 | 184 | 136 | 42 | 6"-600C-GV |
| 26 | 2-V-F505-14526P | A105 NR, CERTIFY | A105 | 92 201 938 | 5.88 | 232 | 184 | 50 | 8"-600C-GV |
| 27 | 2-V-F535-14526P | A182 F22CL3. NT, CERTIFY | F22 | 92 201 939 | 5.88 | 232 | 184 | 50 | 8"-600C-GV |
| 28 | 2-V-F506-14526P | A105 NR, CERTIFY | A105 | 92 201 940 | 7.0 | 284 | 232 | 44 | 10"-600C-GV |
| 29 | 2-V-F536-14526P | A182 F22CL3. NT, CERTIFY | F22 | 92 201 941 | 7.0 | 284 | 232 | 44 | 10-600C-GV |
| 30 | 2-V-F507-14526P | A105 NR, CERTIFY | A105 | 92 201 942 | 8.7 | 336 | 284 | 46 | 12"-600C-GV |
| 31 | 2-V-F537-14526P | A182 F22CL3. NT, CERTIFY | F22 | 92 201 943 | 8.7 | 336 | 284 | 46 | 12"-600C-GV |
| 32 | 2-V-N316-14526P | A105 NR, CERTIFY | A105 | 92 201 944 | 10.6 | 390 | 325 | 38 | 14"-150C-GV |
| 33 | 2-V-N350-14526P | A105 NR, CERTIFY | A105 | 92 201 945 | 10.3 | 431 | 375 | 38 | 16"-150C-GV |
| 34 | 2-V-N575-14526P | A105 NR, CERTIFY | A105 | 92 201 946 | 13.1 | 482 | 425 | 42 | 18"-150C-GV |
| 35 | 2-V-N224-14526P | A105 NR, CERTIFY | A105 | 92 201 947 | 16.1 | 535 | 475 | 44 | 20"-150C-GV |
| 36 | 2-V-N799-14526P | A105 NR, CERTIFY | A105 | 92 201 948 | 21.1 | 640 | 575 | 44 | 24"-150C-GV |
| 37 | 2-V-N435-14526P | A105 NR, CERTIFY | A105 | 92 201 949 | 7.9 | 371 | 321 | 38 | 14"-300C-GV |
| 38 | 2-V-N436-14526P | A105 NR, CERTIFY | A105 | 92 201 950 | 12.5 | 425 | 371 | 48 | 16"-300C-GV |
| 39 | 2-V-N437-14526P | A105 NR, CERTIFY | A105 | 92 201 951 | 17.3 | 525 | 465 | 48 | 20"-300C-GV |
| 40 | 2-V-K904-14526P | A182 F22CL3. NT, CERTIFY | F22 | 92 201 952 | 10.6 | 390 | 325 | 38 | 14"-150C-GV |
| 41 | 2-V-K905-14526P | A182 F22CL3. NT, CERTIFY | F22 | 92 201 953 | 10.3 | 431 | 375 | 38 | 16"-150C-GV |
| 42 | 2-V-K906-14526P | A182 F22CL3. NT, CERTIFY | F22 | 92 201 954 | 13.1 | 482 | 425 | 42 | 18"-150C-GV |
| 43 | 2-V-K907-14526P | A182 F22CL3. NT, CERTIFY | F22 | 92 201 955 | 16.1 | 535 | 475 | 44 | 20"-150C-GV |
| 44 | 2-V-K908-14526P | A182 F22CL3. NT, CERTIFY | F22 | 92 201 956 | 21.1 | 640 | 575 | 44 | 24"-150C-GV |
| 45 | 2-V-N622-14526P | A182 F22CL3. NT, CERTIFY | F22 | 92 201 957 | 7.9 | 371 | 321 | 38 | 14"-300C-GV |
| 46 | 2-V-N616-14526P | A182 F22CL3. NT, CERTIFY | F22 | 92 201 958 | 12.5 | 425 | 371 | 48 | 16"-300C-GV |
| 47 | 2-V-K909-14526P | A182 F22CL3. NT, CERTIFY | F22 | 92 201 959 | 17.3 | 525 | 465 | 48 | 20"-300C-GV |
| 48 | 2-V-F606-14526P | A182 F6A CL3 NT, CERTIFY | F6A | 92 201 960 | 7.0 | 284 | 232 | 44 | 10"-600C-GV |
| 49 | 2-V-NA60-14526P | A182 F6A CL3. NT, CERTIFY | F6A | 92 201 961 | 5.6 | 348 | 297 | 29 | 12"-300C-GV |
| 50 | 2-V-Z030-14526P | A182 F6A CL3, NT,CERTIFY | F6A | 92 201 962 | 3.5 | 195 | 142 | 32 | 6"-300C-FV |
| 51 | 2-V-NE67-14526P | A182 F6A CL3. NT,CERTIFY | F6A | 92 201 963 | 5.24 | 302 | 246 | 29 | 10"-300C-GV |
| 52 | 2-V-F510-14526P | A182 F6A CL3. NT, CERTIFY | F6A | 92 201 964 | 8.7 | 336 | 284 | 46 | 12"-600C-GV |
| 53 | 2-V-U577-14526P | A182 F316. SH, CERTIFY | F316 | 92 203 412 | 0.59 | 95 | 71 | 24 | 3"-150C-FV |
| 54 | 2-V-U578-14526P | A182 F316. SH, CERTIFY | F316 | 92 203 413 | 3.5 | 195 | 142 | 32 | 6"-300C-FV |
| 55 | 2-V-U562-14526P | A182 F316. SH, CERTIFY | F316 | 92 203 414 | 2.5 | 277 | 249 | 27 | 10"-150C-GV(ECO) |
| 56 | 2-V-U563-14526P | A182 F316. SH, CERTIFY | F316 | 92 203 415 | 6.8 | 335 | 299 | 30 | 12"-150C-GV(ECO) 12"-300C-GV(ECO) |
| 57 | 2-V-U564-14526P | A182 F316. SH, CERTIFY | F316 | 92 203 416 | 1.44 | 174 | 146 | 26 | 6"-150C-GV(ECO) 6"-300C-GV(ECO) |
| 58 | 2-V-U565-14526P | A182 F316. SH, CERTIFY | F316 | 92 203 417 | 2.2 | 228 | 198 | 28 | 8"-150C-GV(ECO) 8"-300C-GV(ECO) |
| 59 | 2-V-U566-14526P | A182 F316. SH, CERTIFY | F316 | 92 203 418 | 3.5 | 285 | 250 | 30 | 10"-300C-GV(ECO) |
| 60 | 2-V-U568-14526P | A182 F316. SH, CERTIFY | F316 | 92 203 419 | 0.98 | 102 | 60 | 27 | 3"-600C-GV |
| 61 | 2-V-U569-14526P | A182 F316. SH, CERTIFY | F316 | 92 203 420 | 5.9 | 232 | 184 | 50 | 8"-600C-GV |
| 62 | 2-V-U570-14526P | A182 F316. SH, CERTIFY | F316 | 92 203 421 | 7.0 | 284 | 232 | 44 | 10"-600C-GV |
| 63 | 2-V-U571-14526P | A182 F316. SH, CERTIFY | F316 | 92 203 422 | 8.7 | 336 | 284 | 46 | 12"-600C-GV |
| 64 | 2-V-U579-14526P | A182 F316. SH, CERTIFY | F316 | 92 203 424 | 0.93 | 128 | 96 | 21 | 4"-150C-FV |

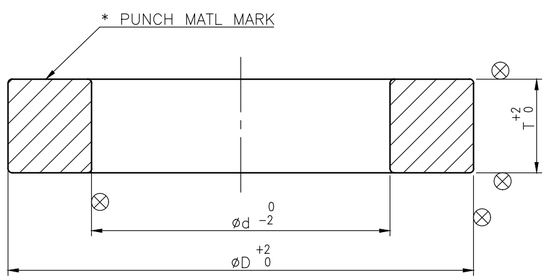


## NOTES:-

1. FORGING SHALL BE MADE IN SUCH A WAY THAT MACHINING CAN BE DONE IN THE SPECIFIED DIMENSION SHOWN IN TABULAR COLUMN.
2. ⊗ INDICATES THE SURFACES WHICH ARE TO BE MACHINED FURTHER.
3. FORGING SHALL BE COMPLY WITH REQUIREMENTS OF LATEST APPLICABLE QUALITY WORK INSTRUCTIONS.

| REV | DATE | ALTERED | A.VSMANIAN |
|---|---|---|---|
| 01 | 30.01.16 | CHD & APPD | MS & KRS |
| ZONE | SL. No. 53 TO 64 INCLUDED. | | |

CAUTION: The information on this document is the property of BHARAT HEAVY ELECTRICALS LTD. It must not be used directly or indirectly in any way detrimental to the interest of the company.

| No OFF | DESCRIPTION | MATL CODE | MATL SPECN | HEAT TREATMENT | SCRAP SORT | NET WT (kg) | GROSS WT (kg) | DRAWING No | ITEM No |
|---|---|---|---|---|---|---|---|---|---|
| – | – | – | – | – | – | – | – | – | – |

TYPE OF PRODUCT OR NAME OF CUSTOMER/PROJECT: CS

BHARAT HEAVY ELECTRICALS LTD.,
UNIT: HIGH PRESSURE BOILER PLANT.
TIRUCHIRAPALLI -620014.
365-120

| | NAME | SIGN | DATE | NO.OF VAR. |
|---|---|---|---|---|
| DRN | M.SARAVANAN | | 18.01.10 | – |
| CHD | S.SATHEES | | 18.01.10 | |
| APPD | M.RAJAKUMAR | | 18.01.10 | |

DEPT VL | CODE 320 | SCALE NTS. | WEIGHT (KG). REF. TABLE | REFERENCE INFORMATIONS | NO. OF ITEMS –

TITLE: SEAT RING (PROOF MACHINED FORGING)

CARD CODE: U 01

DRAWING NO. 2-V-0000-14526P

REV 01

Size A2

DRAWING NO 2-V-0000-14879R

ALL DIMENSIONS ARE IN MILLIMETRES. FOR TOLERANCES OF UNTOLERANCED DIMENSIONS DURING MANUFACTURE REFER RELEVANT QCP / QP

100

## SECTION-XX

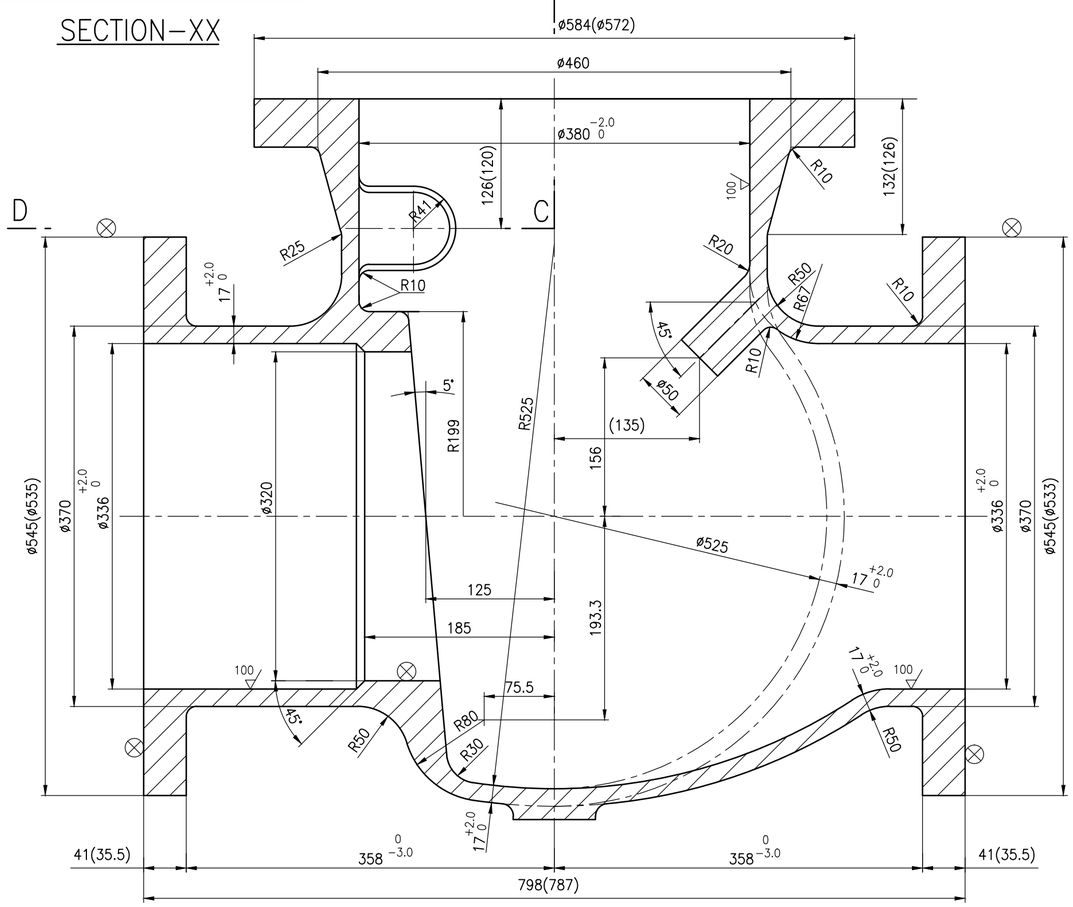


## SECTION-XY

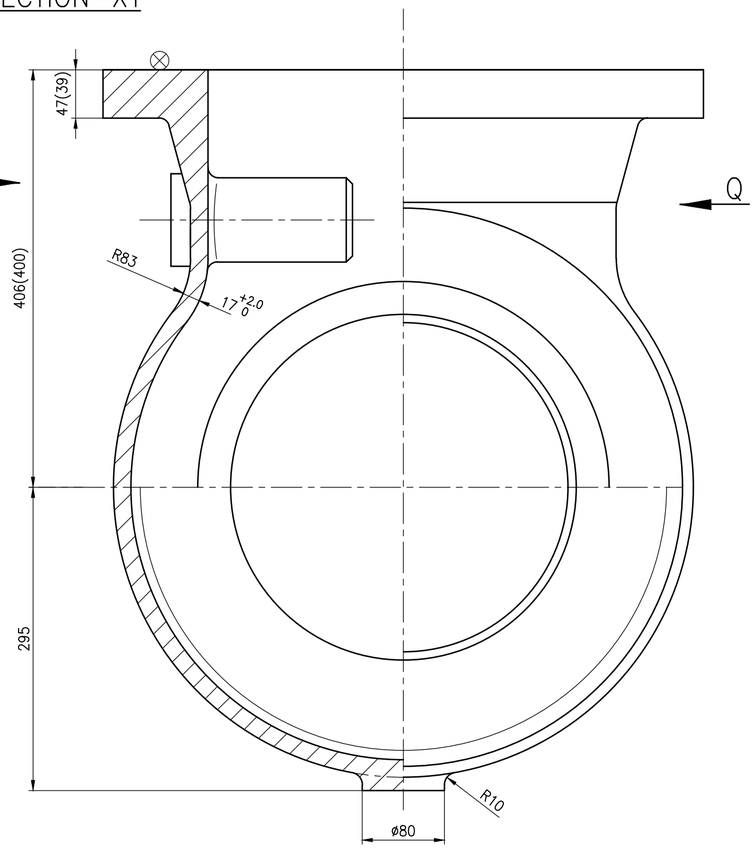


## VIEW-P

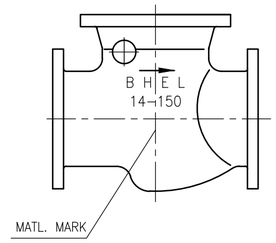


## VIEW-Q

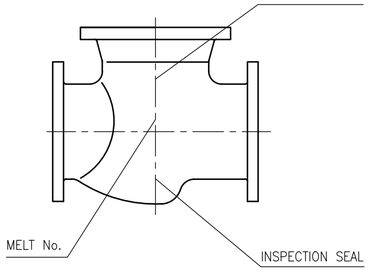


## SECTION ABCD

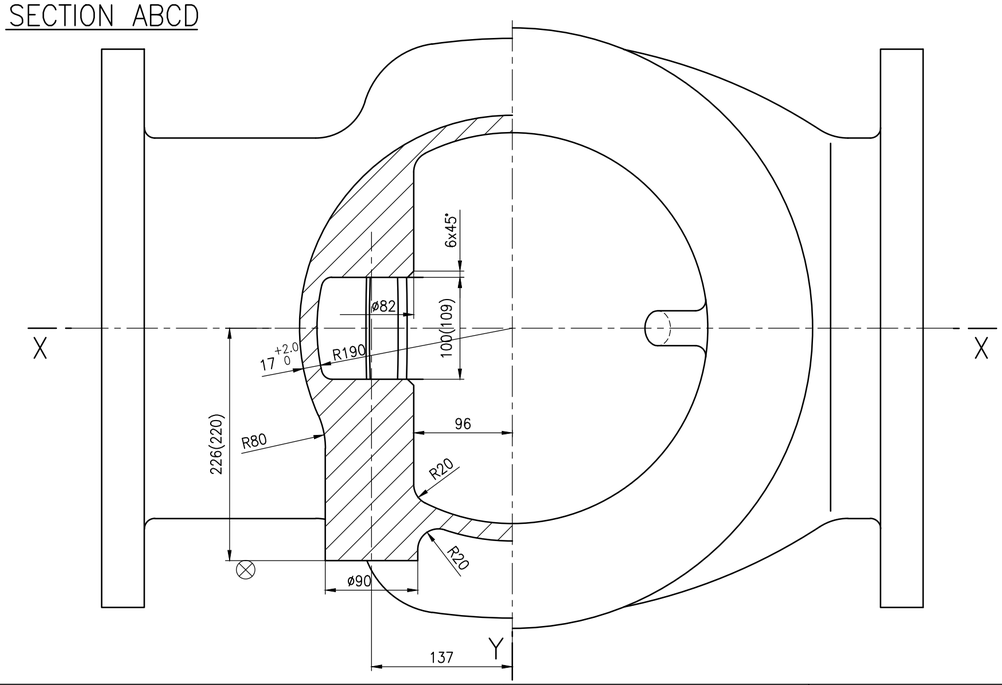


## NOTES:

1. NECESSARY MACHINING ALLOWANCES HAVE BEEN ADDED ON ALL MACHINABLE SURFACES.
2. 100 CASTING SURFACES MUST BE OF HIGH QUALITY WITHOUT SURFACE UNEVENNESS.
3. FINISH MACHINED DIMENSIONS ARE INDICATED WITHIN BRACKETS FOR INFORMATION ONLY.
4. ALL DETAILS SHOWN IN VIEWS 'P' AND 'Q' EXCEPT MELT No. AND INSPECTION SEAL ARE TO BE CAST.
5. CASTING SHALL COMPLY WITH LATEST APPLICABLE QUALITY WORK INSTRUCTION.
6. HEIGHT OF THE CASTING LETTERS 25mm.
7. UNSPECIFIED CASTING RADII R3-R5
8. ⊗ SURFACE TO BE FURTHER MACHINED.

| SL. No. | DRAWING No. | COMP. CODE | MATL. SPECN. | MATL. MARK |
|---|---|---|---|---|
| 03 | 2-V-Z084-14879R | 922032210000 | CI, IS-210 Gr.FG260 ATTEST,AN | CI |
| 02 | 2-V-Z083-14879R | 922032200000 | SA217 WC9, ATTEST,NT | WC9 |
| 01 | 2-V-Z082-14879R | 922032190000 | SA216 WCB, ATTEST,NR | WCB |

| No OFF | DESCRIPTION | MATL CODE | MATL SPECN | HEAT TREATMENT | SCRAP SORT | NET WT (kg) | GROSS WT (kg) | DRAWING No | ITEM No |
|---|---|---|---|---|---|---|---|---|---|
| | | | | | | | | | |

TYPE OF PRODUCT
OR NAME OF
CUSTOMER/PROJECT

BHARAT HEAVY ELECTRICALS LTD.,
UNIT: HIGH PRESSURE BOILER PLANT.
TIRUCHIRAPALLI -620014.
365-120

| | NAME | SIGN | DATE | NO.OF VAR. |
|---|---|---|---|---|
| DRN | V.BAIRAVAN | | 05.02.14 | |
| CHD | S.SATHEES | | 05.02.14 | |
| APPD | K.RAJASEKARAN | | 05.02.14 | |

| REV | DATE | ALTERED |
|---|---|---|
| | | CHD & APPD |

ZONE

CAUTION: The information on this document is the property of BHARAT HEAVY ELECTRICALS LTD. It must not be used directly or indirectly in any way detrimental to the interest of the company.

DEPT VL
CODE 320
SCALE NTS
WEIGHT (KG). 354
REFERENCE INFORMATIONS
NO. OF ITEMS

TITLE
BODY
CASTING 14"/150 CLASS

CARD CODE U 01

DRAWING NO. REFER TABLE
2-V-0000-14879R

REV

Size A2

DRAWING NO 2-V-0000-14884R/1

ALL DIMENSIONS ARE IN MILLIMETRES. FOR TOLERANCES OF UNTOLERANCED DIMENSIONS DURING MANUFACTURE REFER RELEVANT QCP / QP

100

## SECTION-XX

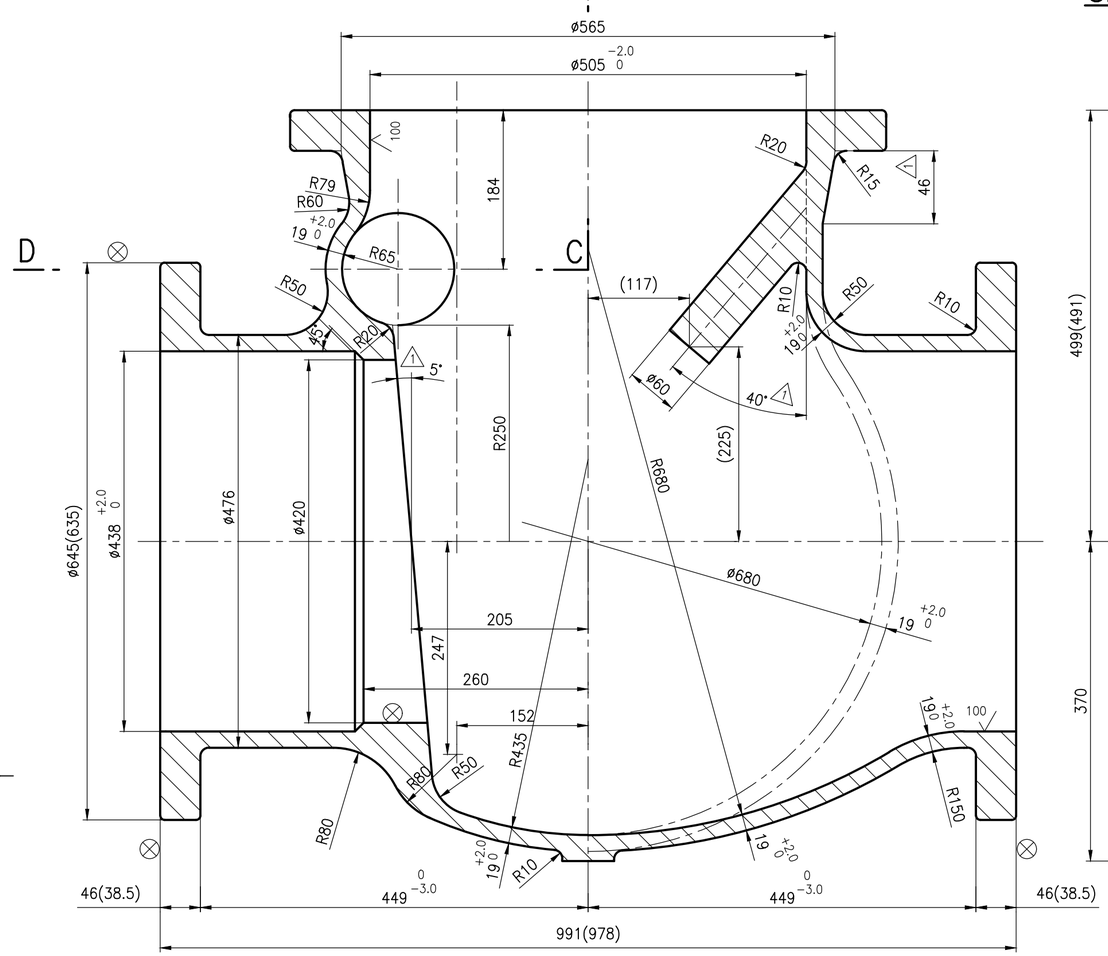


## SECTION-YY

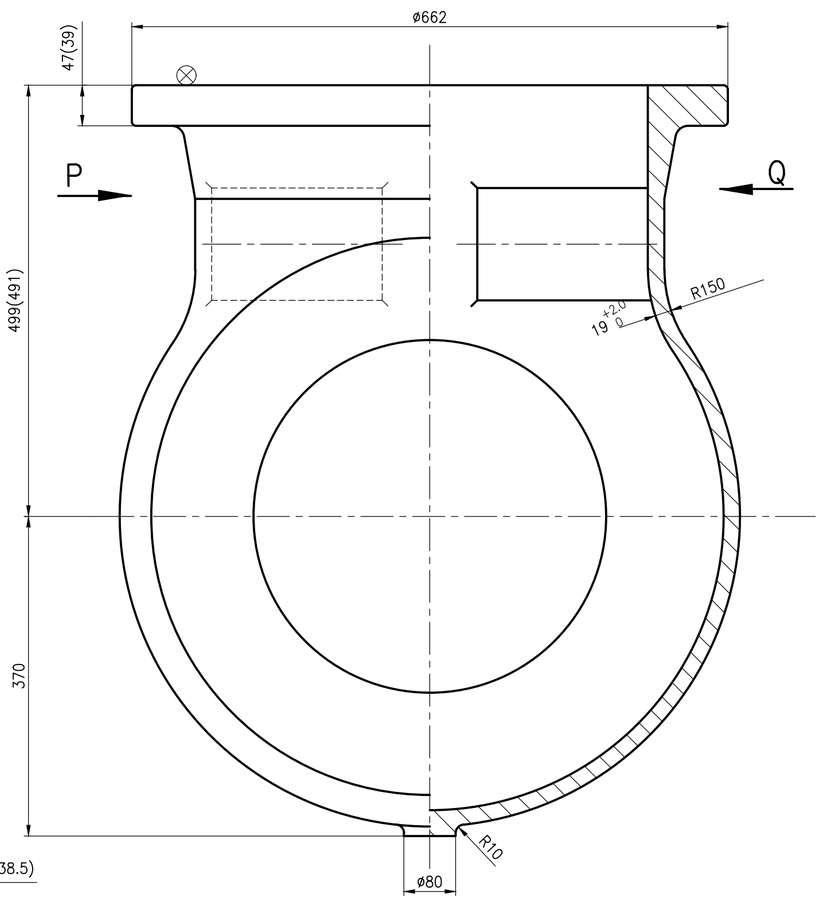


## VIEW-P

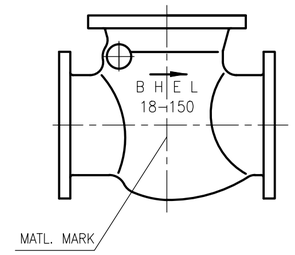


## VIEW-Q

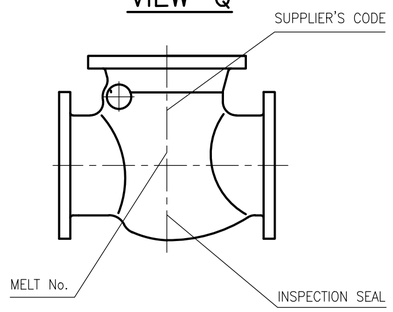


## SECTION ABCD

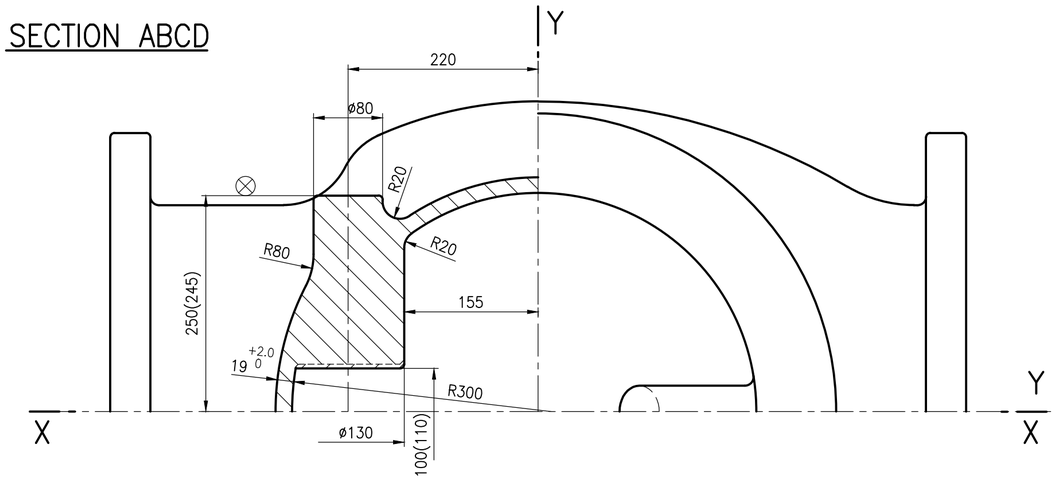


## NOTES:

1. NECESSARY MACHINING ALLOWANCES HAVE BEEN ADDED ON ALL MACHINABLE SURFACES.
2. 100 CASTING SURFACES MUST BE OF HIGH QUALITY WITHOUT SURFACE UNEVENNESS.
3. FINISH MACHINED DIMENSIONS ARE INDICATED WITHIN BRACKETS FOR INFORMATION ONLY.
4. ALL DETAILS SHOWN IN VIEWS 'P' AND 'Q' EXCEPT MELT No. AND INSPECTION SEAL ARE TO BE CAST.
5. CASTING SHALL COMPLY WITH LATEST APPLICABLE QUALITY WORK INSTRUCTION.
6. HEIGHT OF THE CASTING LETTERS 25mm.
7. UNSPECIFIED CASTING RADII R3-R5
8. ⊗ SURFACE TO BE FURTHER MACHINED.

| SL. No. | DRAWING No. | COMP. CODE | MATL. SPECN. | MATL. MARK |
|---|---|---|---|---|
| 03 | 2-V-Z087-14884R/1 | 922032370000 | CI, IS-210 Gr.FG260 ATTEST,AN | CI |
| 02 | 2-V-Z086-14884R/1 | 922032360000 | SA217 WC9, ATTEST,NT | WC9 |
| 01 | 2-V-Z085-14884R/1 | 922032350000 | SA216 WCB, ATTEST,NR | WCB |

| No OFF | DESCRIPTION | MATL CODE | MATL SPECN | HEAT TREATMENT | SCRAP SORT | NET WT (kg) | GROSS WT (kg) | DRAWING No | ITEM No |
|---|---|---|---|---|---|---|---|---|---|
| | | | | | | | | | |

TYPE OF PRODUCT
OR NAME OF
CUSTOMER/PROJECT

BHARAT HEAVY ELECTRICALS LTD.,
UNIT: HIGH PRESSURE BOILER PLANT.
TIRUCHIRAPALLI -620014.
365-120

| | NAME | SIGN | DATE | NO.OF VAR. |
|---|---|---|---|---|
| DRN | V.BAIRAVAN | | 03.03.14 | |
| CHD | S.SATHEES | | 03.03.14 | |
| APPD | K.RAJASEKARAN | | 03.03.14 | |

| REV | DATE | ALTERED | |
|---|---|---|---|
| 1 | 05.09.15 | CHD & APPD | VB SSK & KRS |

ZONE: DIMENSION 46 AND ANGLES 40° & 5° INCLUDED.

DCP No.801991

CAUTION: The information on this document is the property of BHARAT HEAVY ELECTRICALS LTD. It must not be used directly or indirectly in any way detrimental to the interest of the company.

DEPT VL
CODE 320
SCALE NTS
WEIGHT (KG). ~522
REFERENCE INFORMATIONS
NO. OF ITEMS

TITLE: BODY
CASTING 18"/150 CLASS
CARD CODE U 01
DRAWING NO. REFER TABLE 2-V-0000-14884R
REV 1

Size A2

TP-DG-2-V-0000-03304R
CORPORATE DRG ID

FIRST ANGLE PROJECTION (ALL DIMENSIONS IN MILLIMETRES)

FOR TOLERANCES OF UNTOLERANCED DIMENSIONS DURING MANUFACTURE REFER RELEVANT QCP/Q.P

DRAWING No. 2-V-0000-03304R

CAUTION THE INFORMATION ON THIS DOCUMENT IS THE PROPERTY OF BHARAT HEAVY ELECTRICALS LTD. IT MUST NOT BE USED DIRECTLY OR INDIRECTLY IN ANY WAY DETRIMENTAL TO THE INTEREST OF THE COMPANY.

05-228/C

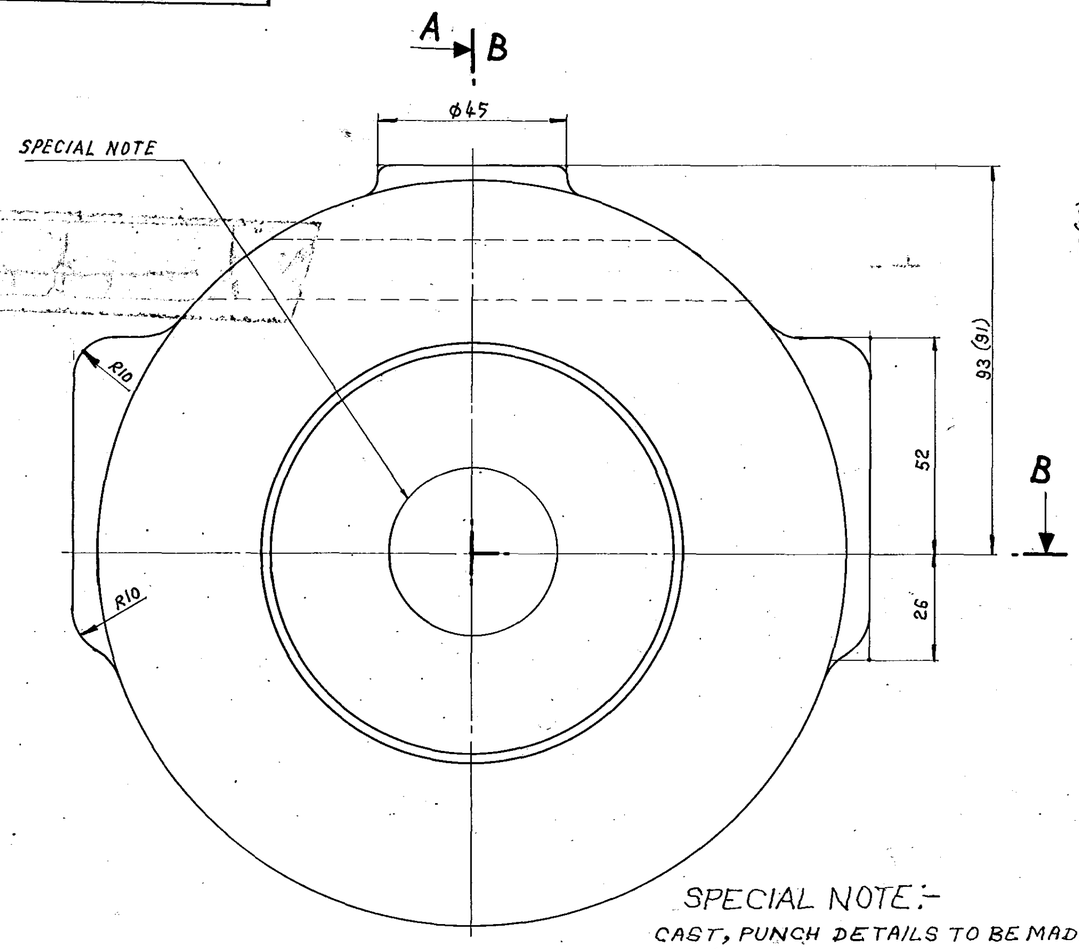


SPECIAL NOTE:-
CAST, PUNCH DETAILS TO BE MADE WITHIN THE AREA OF THE CIRCLE ϕ40mm SHOWN.

## SECTION- AA

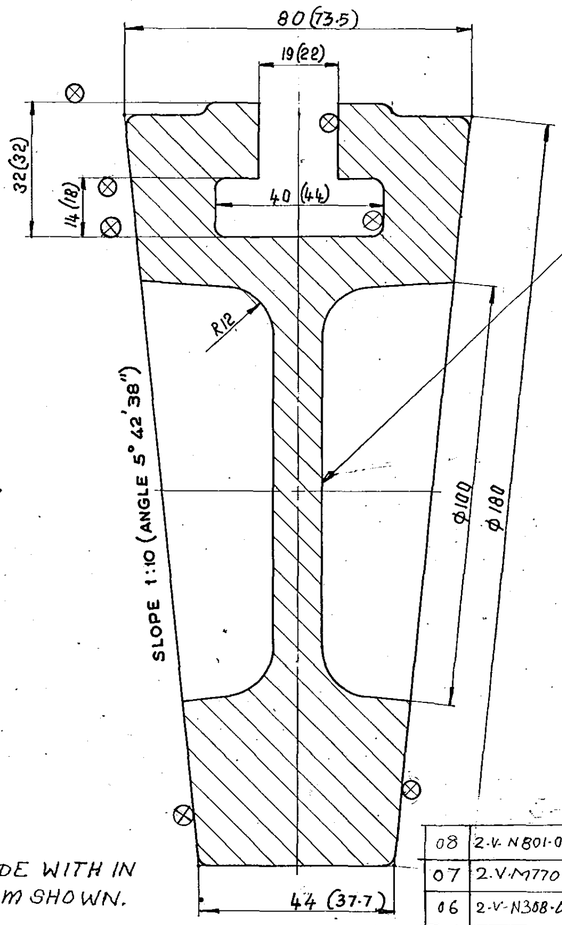


CAST- 6-150
MATL MARK
MELT NO:
INSPECTION SEAL
SUPPLIER'S CODE:

## NOTE:-

1. NECESSARY MACHINING ALLOWANCES HAVE BEEN ADDED ON ALL MACHINABLE SURFACES
2. ⊗ SURFACES TO BE MACHINED
3. UNSPECIFIED CASTING RADII R3-R5
4. ▽100 CASTING SURFACES MUST BE HIGH QUALITY WITHOUT SURFACE UNEVENNESS
5. PERMISIBLE DIMENSIONAL DEVIATION OF CASTING SURFACES- REFER VL:STDC: (LATEST REV.)
6. FINISH MACHINED DIMENSIONS ARE INDICATED WITHIN BRACKETS
7. CASTINGS SHALL MEET THE REQUIREMENTS OF TDC NO: APPLICABLE WITH LATEST REVISION.

## SECTION-BB

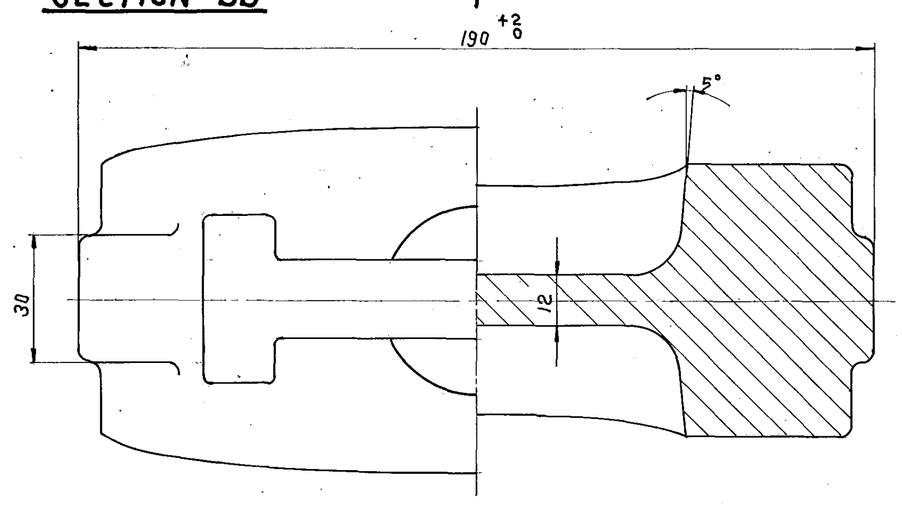


| SL. No | DRAWING NO. | MATL. SPECN. | MATL. CODE | NET WT. | MATL. MARK | ITEM NO. |
|---|---|---|---|---|---|---|
| 08 | 2-V-N801-03304R | ASTM A216 WCC NORMALISED. | 92201049 | 8.6 | WCC | 4 |
| 07 | 2-V-M770 03304R | A352 LCB CERTIFY | 92 200 898 | 8.6 | LCB | 4 |
| 06 | 2-V-N308-03304R | ASTM A217 WC9 CERTIFY N&T | 92200 428 | 8.6 | WC9 | 4 |
| 05. | 2.V.N339.03304R | ASTM A351 CF8M CERTIFY S.H. | 92 200 405 | 8.6 | CF8M | 4 |
| 04 | 2-V-N306-03304R | ASTM A217 WC6 CERTIFY N&T | 92200 345 | 8.6 | WC6 | 4 |
| 03 | 2-V-N284-03304R | ASTM A351 CF8 CERTIFY SOLUTION HEATTREATED | 92200314 | 8.6 | CF8 | 4 |
| 02. | 2.V.N223.03304R | A351 CF8C CERTIFY SOLUTION HEATTREATED | 92 200 1610000 | 8.6 | CF8C | 4 |
| 01 | 2-V-N001-03304R | ASTM A216 WCB NORMALISED | 92 034 280 0000 | 8.6 | A216 WCB | 4 |

TYPE OF PRODUCT OR NAME OF CUSTOMER/PROJECT

| REV | DATE | ALTD | CHD & APPD |
|---|---|---|---|
| 07 | 16-03-99 | N.D.PAL | |

1. SL.NO. 8 INCLUDED.

| REV | DATE | ALTD | CHD & APPD |
|---|---|---|---|
| 06 | 17-6-97 | | |

SL.NO. 07 INCLUDED.

| REV | DATE | ALTD | CHD & APPD |
|---|---|---|---|
| 05 | 10-11-95 | N.D.PAL | |

SL.No. 6 INCLUDED.

| REV | DATE | ALTD | CHD & APPD |
|---|---|---|---|
| 04 | 3-10-95 | | |

SL.NO. 05 INCLUDED.

| REV | DATE | ALTD | CHD & APPD |
|---|---|---|---|
| 03 | 5-8-95 | | |

SL.No. 04 INCLUDED.

| REV | DATE | ALTD | CHD & APPD |
|---|---|---|---|
| 02 | 31-03-95 | N.D.PAL | |

SL.NO. 3 IS INCLUDED

| REV | DATE | ALTERED | CHECKED | ZONE |
|---|---|---|---|---|
| 01 | 20-4-94 | | | 1 |

SL.NO. 2 INCLUDED. TABLE FOR TDC NO. TO DIFFERENT MATL. ADDED.

**Bharat Heavy Electricals Ltd.,**
BOILER PLANT UNIT
TIRUCHIRAPALLI-620 014

| | NAME | SIGN | DATE |
|---|---|---|---|
| DRN | N.DHANAPAL | | 4-5-88 |
| CHD | N.DHANAPAL | | 4-5-88 |
| APPD | S.KUMAR | | 5/5/88 |

NO. OF VAR

| DEPT | GRADE OF UNTOL. DIM | SCALE | WEIGHT (kg) | REF TO ASSY / OLD DRG | ITEM NO. |
|---|---|---|---|---|---|
| 320 | | NTS | 8.6 | – | |

CODE: VL

TITLE: WEDGE 6"/C150

CARD CODE: U 01

DRAWING NO. 2-V-0000-03304R

REV 07

Size A2

TP-DG-2-V-0000-03304R
CORPORATE DRG ID

DRAWING NO. 2-V-0000-05885R/01

ALL DIMENSIONS ARE IN MILLIMETRES. FOR TOLERANCES OF UNTOLERANCED DIMENSIONS DURING MANUFACTURE REFER RELEVANT QCP / QP

## SECTION–AA

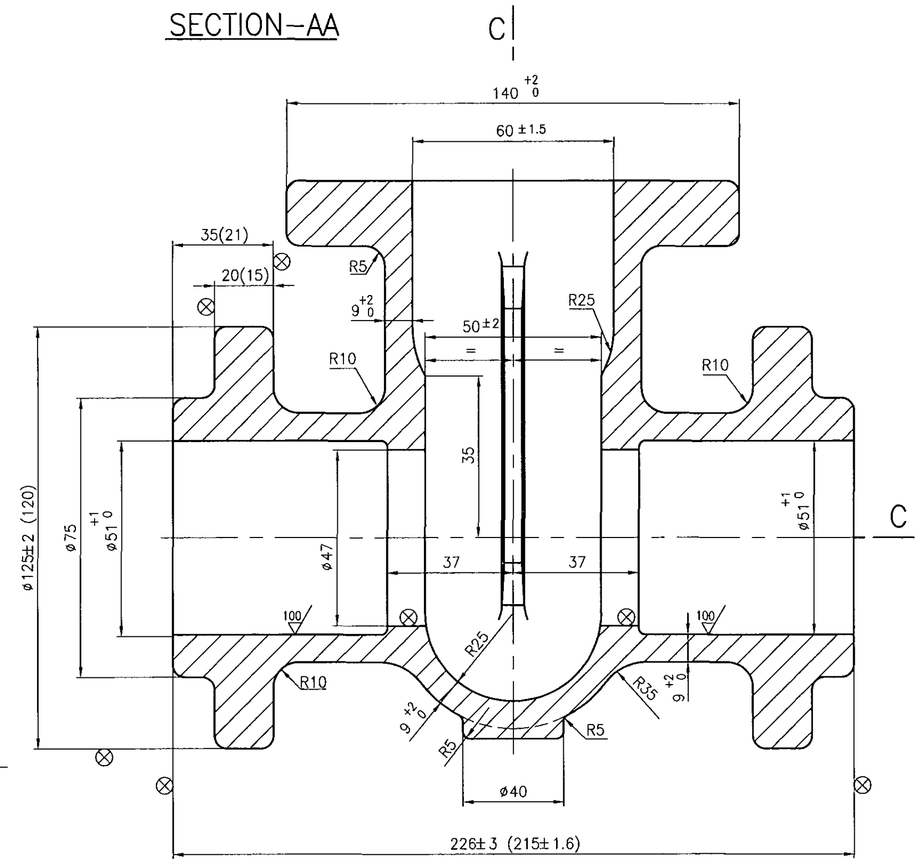


## SECTION–BB

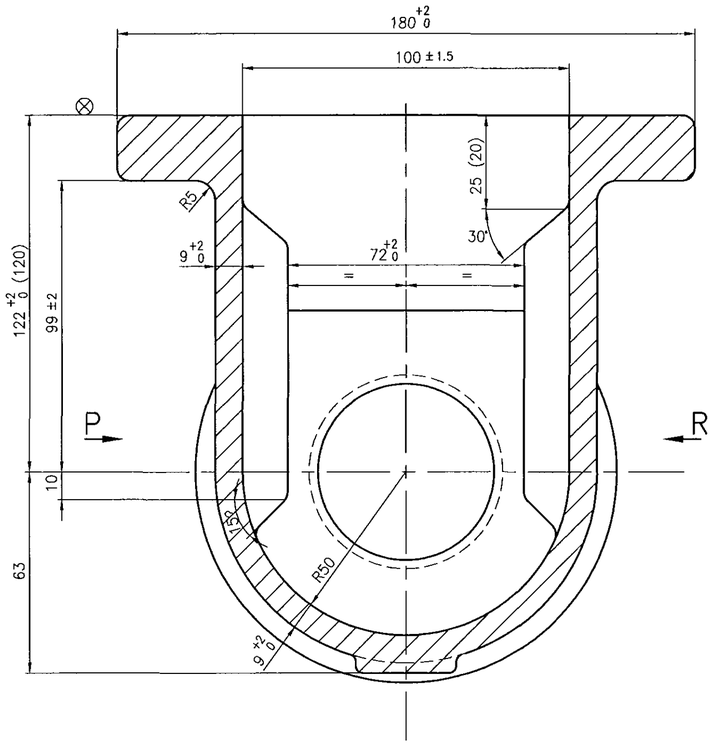


## CAST IDENTIFICATION MARK

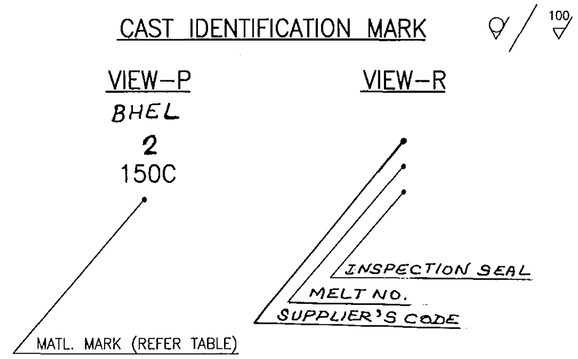


## NOTES:–

1. CASTING SHALL COMPLY WITH REQUIREMENTS OF LATEST APPLICABLE QUALITY PROCEDURE.
2. NECESSARY MACHINING ALLOWANCES HAVE BEEN ADDED ON ALL MACHINABLE SURFACES.
3. 100 CASTING SURFACES MUST BE OF HIGH QUALITY WITHOUT SURFACE UNEVENNESS.
4. UNSPECIFIED CASTING RADII R3 TO R5.
5. HEIGHT OF CASTING LETTERS–20mm.
6. ⊗ SURFACES TO BE MACHINED.
7. FINISH–MACHINED DIMENSIONS ARE INDICATED WITHIN BRACKETS.
8. MELT No. & INSPECTION SEAL TO BE PUNCHED REST OF THE DETAILS ARE TO BE CAST.
9. RISER REMAINS ARE TO COMPLETELY REMOVED SUITABLY.

## * SPECIAL NOTES:–

1. GUIDE RIB DIMENSIONS TO BE MAINTAINED WITHIN THE TOLERANCES INDICATED
2. BOTH GUIDE RIBS TO BE COPLANER AND TRUELY VERTICAL.
3. PROPER MATCHING FOR GUIDE RIBS WITH MACHINED WEDGE TO BE ENSURED BEFORE ACCEPTING CAST BODIES PREFERABLE AT THE FOUNDARY.

## SECTION–CC

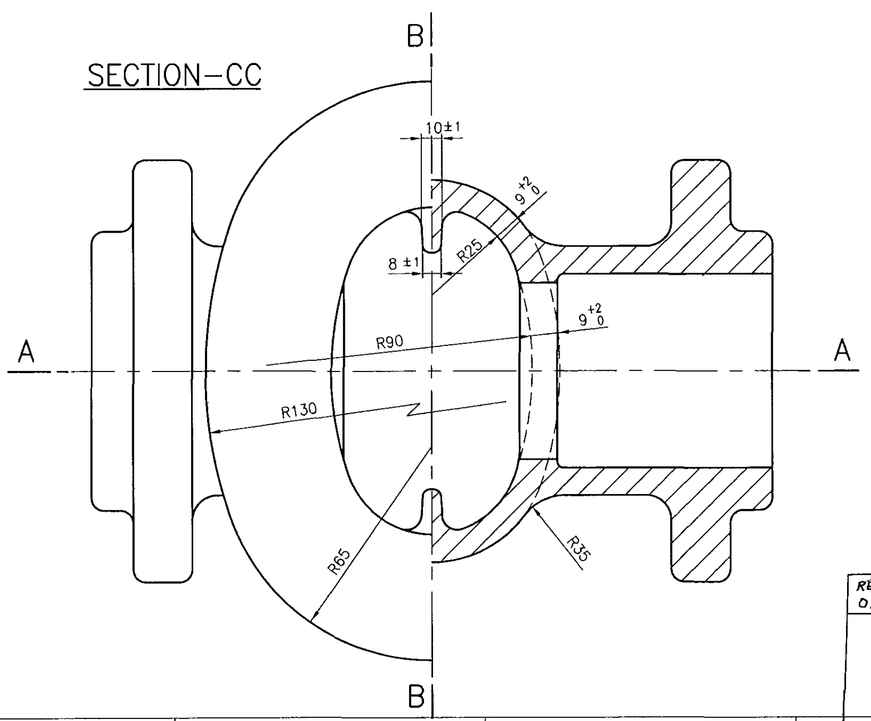


DRG. RETRACED WITH REVISION 00 ON 11.07.97

| SL No | MATL. MARK TO BE CAST | MATL CODE | MATL SPECN | HEAT TREATMENT | SCRAP SORT | NET WT (kg) | GROSS WT (kg) | DRAWING No | ITEM No |
|---|---|---|---|---|---|---|---|---|---|
| 04 | A217 WC9 | 92 200 323 | A217 WC9 ATTEST | NT | 20 | – | | 2VN30105885R/01 | 01 |
| 03 | A217 WC6 | 92 200 322 | A217 WC6 ATTEST | NT | 20 | – | | 2VN30005885R/01 | 01 |
| 02 | A216 WCC | 92 200 321 | A216 WCC ATTEST | NR | 10 | – | | 2VN29905885R/01 | 01 |
| 01 | A216 WCB | 92 200 320 | A216 WCB ATTEST | NR | 10 | – | | 2VN29805885R/01 | 01 |

| REV. | DATE | ALTD:- / CHD & APPD:- |
|---|---|---|
| 02 | | |

| REV | DATE | ALTERED |
|---|---|---|
| 01 | 15.7.97 | CHD & APPD |

ZONE

DIMENSIONS DIA 40 & TAPER LENGTH 25 REMOVED IN INLET & OUTLET

RFER DCN.CS: 0725

CAUTION: The information on this document is the property of BHARAT HEAVY ELECTRICALS LTD. It must not be used directly or indirectly in any way detrimental to the interest of the company.

TYPE OF PRODUCT OR NAME OF CUSTOMER/PROJECT: CS

BHARAT HEAVY ELECTRICALS LTD.
UNIT: HIGH PRESSURE BOILER PLANT.
TIRUCHIRAPALLI -620014.
365–120

| | NAME | SIGN | DATE | NO.OF VAR. |
|---|---|---|---|---|
| DRN | T.R.R.MURTHY | T.R.R.M | 11.07.97 | – |
| CHD | T.R.R.MURTHY | T.R.R.M | 11.07.97 | |
| APPD | A.VISWANATHAN | | 11.07.97 | |

| DEPT | SCALE | WEIGHT (KG). | REFERENCE INFORMATIONS | NO. OF ITEMS |
|---|---|---|---|---|
| VL / CODE 320 | NTS. | 11.5 | CAD:C205885R | – |

| TITLE | CARD CODE | DRAWING NO. | REV |
|---|---|---|---|
| BODY (2"–C150) | U 01 | 2–V–0000–05885R | 01 |

Size A2

DRAWING NO. 2-V-0000-13611R

ALL DIMENSIONS ARE IN MILLIMETRES. FOR TOLERANCES OF UNTOLERANCED DIMENSIONS DURING MANUFACTURE REFER RELEVANT QCP / QP

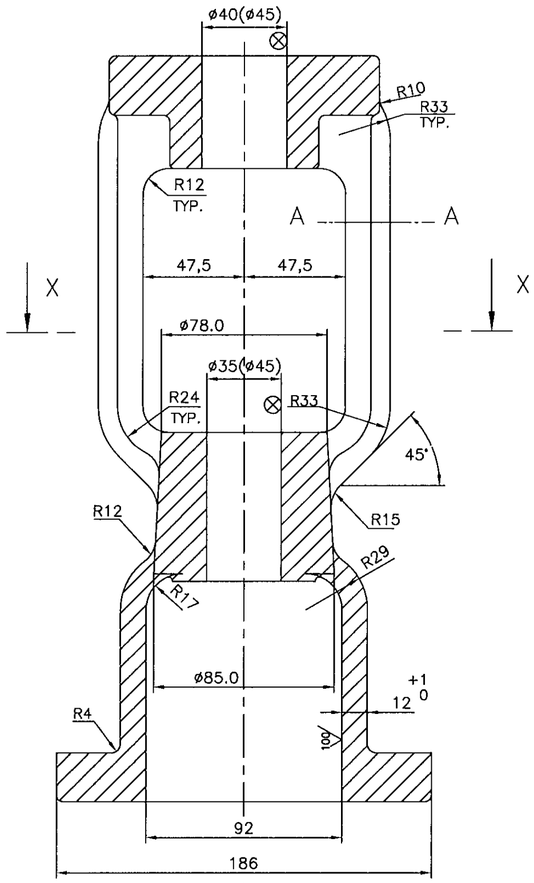


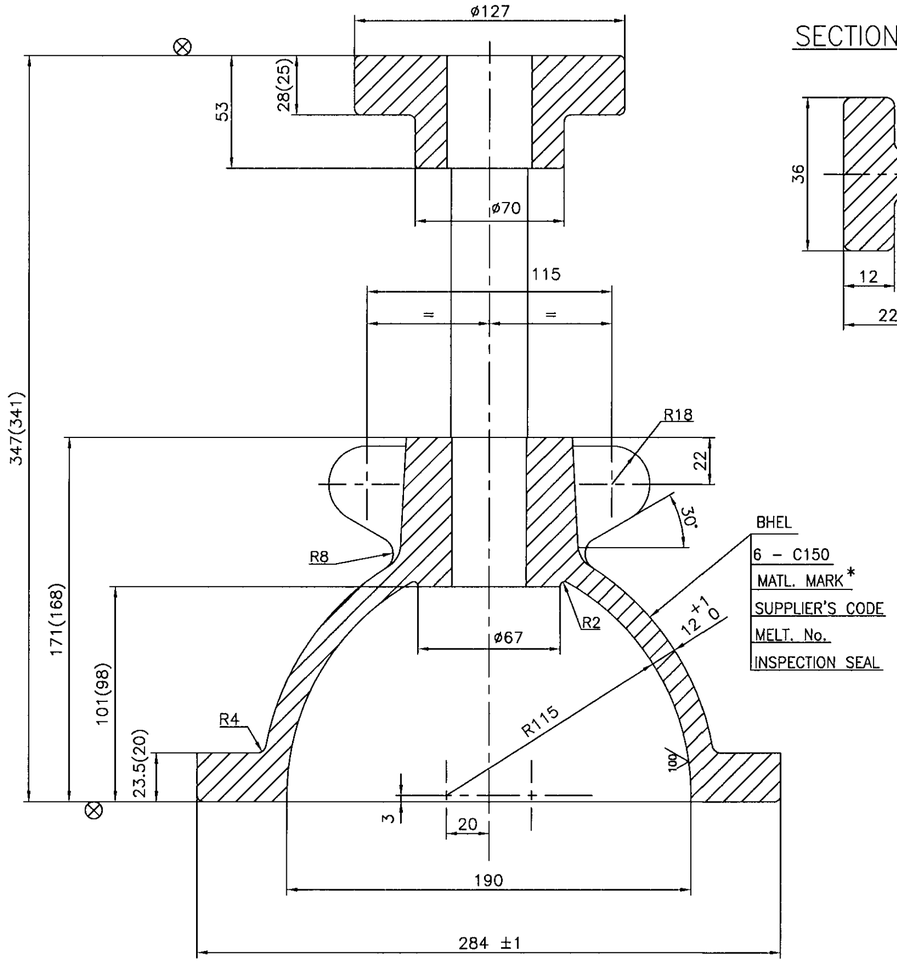


## SECTION AA

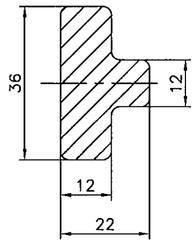


100

## NOTE

01. NECESSARY MACHINING ALLOWANCES HAVE BEEN ADDED ON ALL MACHINABLE SURFACES.
02. PERMISSIBLE DEVIATIONS OF NON TOLERANCED CASTING DIMENSIONS REFER APPLICABLE TDC
03. FINISH MACHINED DIMENSIONS ARE INDICATED WITHIN BRACKETS FOR INFORMATION ONLY.
04. LETTERS– BHEL,SIZE,MATL.& SUPPLIERS CODE ARE TO BE CAST IN THE INDICATED ZONE.
05. CASTING SHALL COMPLY WITH THE REQUIREMENTS OF APPLICABLE TDC
06. UNSPECIFIED CASTING RADII = R3 TO R5
07. HEIGHT OF CASTING LETTERS = 15 mm
08. ⊗ INDICATES SURFACE TO BE MACHINED.
09. 100 INDICATED CASTING SURFACES SHALL BE OF HIGH QUALITY WITHOUT SURFACE UNEVENNESS.

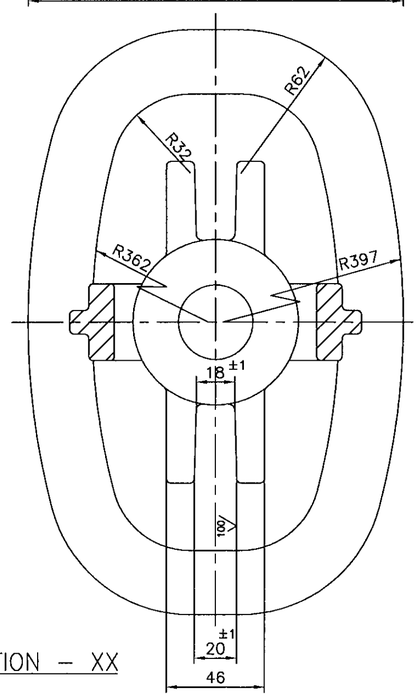


## SECTION – XX

| REV | DATE | ALTERED M.SRINIVASAN | REV | DATE | ALTERED M.SRINIVASAN |
|---|---|---|---|---|---|
| 02 | 05.08.04 | CHD & APPD K.S.RAMAN | 01 | 15.03.04 | CHD & APPD K.S.RAMAN |
| DCP:800351 | DIMENSION 284±1 WAS 274±1 | | ZONE DCP:800297 | DIMENSION 186 WAS 176 AND R397 WAS 392 | |

| | | | | | | | | | | |
|---|---|---|---|---|---|---|---|---|---|---|
| WCB | 01 | CASTING | 92 201 428 | ASTM A216 WCB–CERTIFY | NORMALISED | – | 16.6 | – | 2.V.NC06.13611R/02 | – |
| MATL. MARK * | No OFF | DESCRIPTION | MATL CODE | MATL SPECN | HEAT TREATMENT | SCRAP SORT | NET WT (kg) | GROSS WT (kg) | DRAWING No | ITEM No |

TYPE OF PRODUCT
OR NAME OF
CUSTOMER/PROJECT

BHARAT HEAVY ELECTRICALS LTD.,
UNIT: HIGH PRESSURE BOILER PLANT.
TIRUCHIRAPALLI-620014.
365–120

| | NAME | SIGN | DATE | NO.OF VAR. |
|---|---|---|---|---|
| DRN | M.SRINIVASAN | | 15.03.04 | |
| CHD | P.BOOMINATHAN | | 15.03.04 | |
| APPD | K.S.RAMAN | | 15.03.04 | |

DEPT V L | SCALE NTS | WEIGHT (KG). 16.6 | REFERENCE INFORMATIONS COMPONENT CODE:922014280000 CAD:C213611R | NO. OF ITEMS

CODE

TITLE: YOKE CUM BONNET | CARD CODE U 01 | DRAWING NO. 2–V–0000–13611R | REV 02

CAUTION: The information on this document is the property of BHARAT HEAVY ELECTRICALS LTD. It must not be used directly or indirectly in any way detrimental to the interest of the company.

Size A2

DRAWING NO. 2-V-0000-13685R

ALL DIMENSIONS ARE IN MILLIMETRES. FOR TOLERANCES OF UNTOLERANCED DIMENSIONS DURING MANUFACTURE REFER RELEVANT QCP / QP

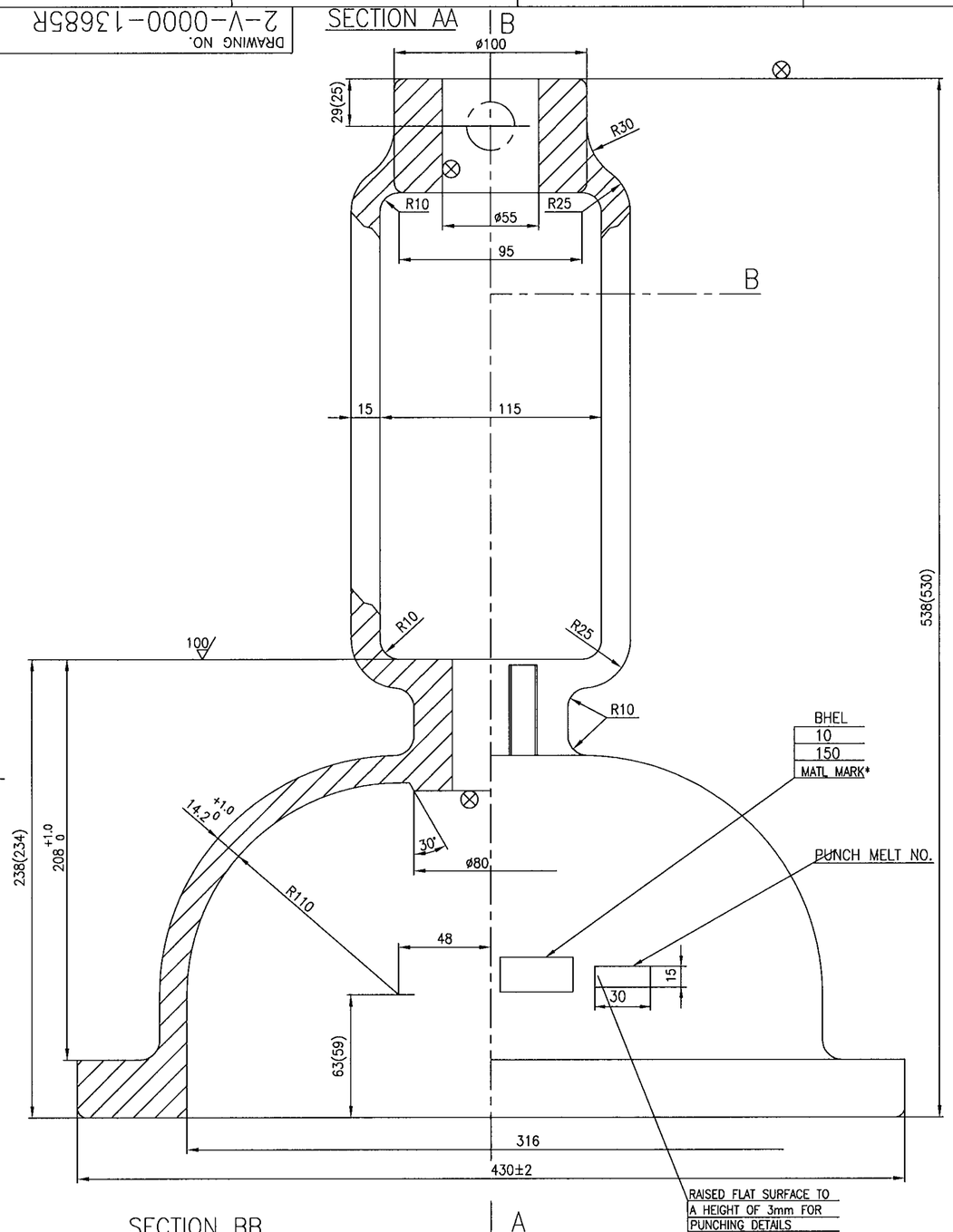


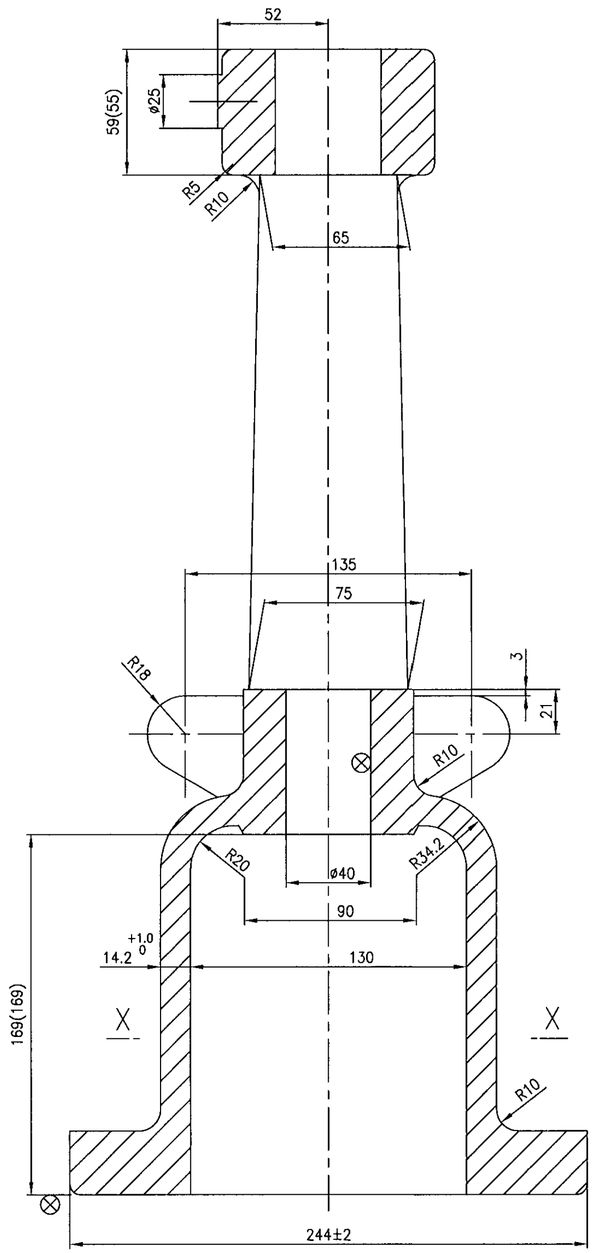


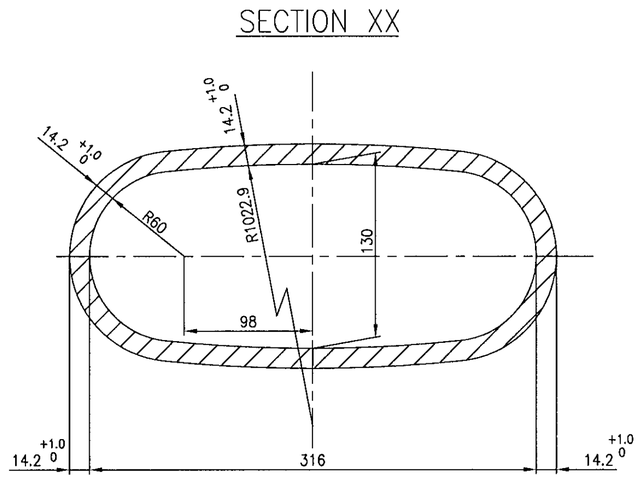


NOTES:

1. NECESSARY ALLOWANCES HAVE BEEN ADDED ON ALL MACHINABLE SURFACES.
2. FOR PERMISSIBLE DIMENSIONAL DEVIATIONS OF NON TOLERANCED LATEST DIMENSIONS REFER LATEST APPLICABLE QUALITY WORK INSTRUCTIONS
3. FINISH MACHINED DIMENSIONS ARE INDICATED WITHIN BRACKETS FOR INFORMATION ONLY.
4. 100 INDICATES THE CASTINGSURFACES MUST BE OF HIGH QUALITY WITHOUT SURFACE UNEVENNESS.
5. UNSPECIFIED CASTING RADIOUS R3 MAX..
6. ⊗ THIS MARK INDICATES THE SURFACES TO BE MACHINED.
7. HEIGHT OF CASTING LETTERS 20mm.
8. CASTING SHALL COMPLY WITH THE REQUIREMENTS OF LATEST APPLICABLE QUALITY WORK INSTRUCTIONS PROCEDURE IN ALL RESPECTS.

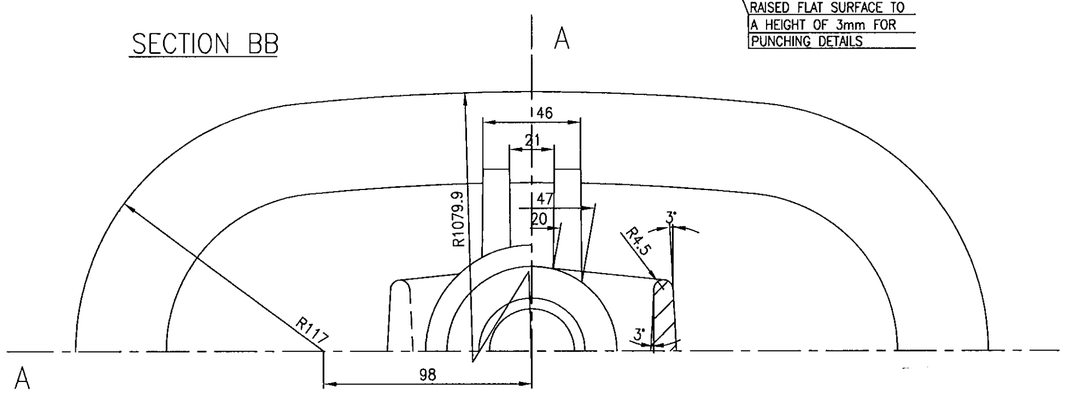


| SL. No. | DRAWING No. | MATL. CODE | MATL. SPECN. | *MATL. MARK |
|---|---|---|---|---|
| 01 | 2-V-NC10-13685R | 922014740000 | A216 WCB CERTIFY,NR | WCB |

| No OFF | DESCRIPTION | MATL CODE | MATL SPECN | HEAT TREATMENT | SCRAP SORT | NET WT (kg) | GROSS WT (kg) | DRAWING No | ITEM No |
|---|---|---|---|---|---|---|---|---|---|
| | | | | | | | | | |

| REV | DATE | ALTERED |
|---|---|---|
| | | CHD & APPD |
| ZONE | | |

CAUTION: The information on this document is the property of BHARAT HEAVY ELECTRICALS LTD. It must not be used directly or indirectly in any way detrimental to the interest of the company.

TYPE OF PRODUCT
OR NAME OF
CUSTOMER/PROJECT

BHARAT HEAVY ELECTRICALS LTD.,
UNIT: HIGH PRESSURE BOILER PLANT.
TIRUCHIRAPALLI -620014.
365-120

| | NAME | SIGN | DATE | NO.OF VAR. |
|---|---|---|---|---|
| DRN | V.BAIRAVAN | | | |
| CHD | R.L.NARAYANAN | | | |
| APPD | M.RAJAKUMAR | | | |

DEPT VL
CODE 320
SCALE NTS
WEIGHT (KG). 40.0
REFERENCE INFORMATIONS
NO. OF ITEMS

TITLE
YOKE CUM BONNET
10"/150CL GV

CARD CODE U 01

DRAWING NO. 2-V-0000-13685R

REV

Size A2

FOR TOLERANCES OF UNTOLERANCED DIMENSIONS DURING MANUFACTURE REFER RELEVANT QCP/QP

## SECTION_AA

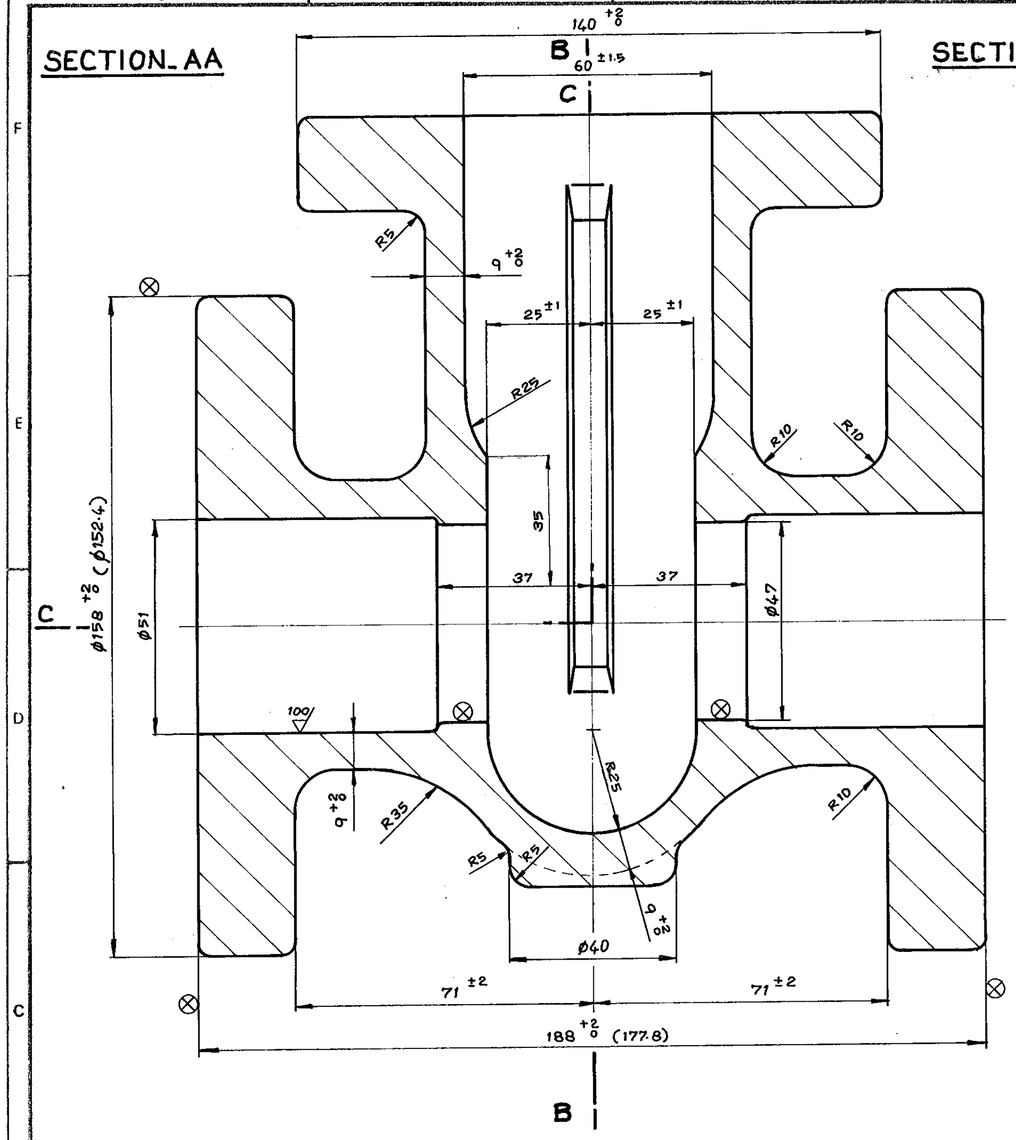


## SECTION_BB

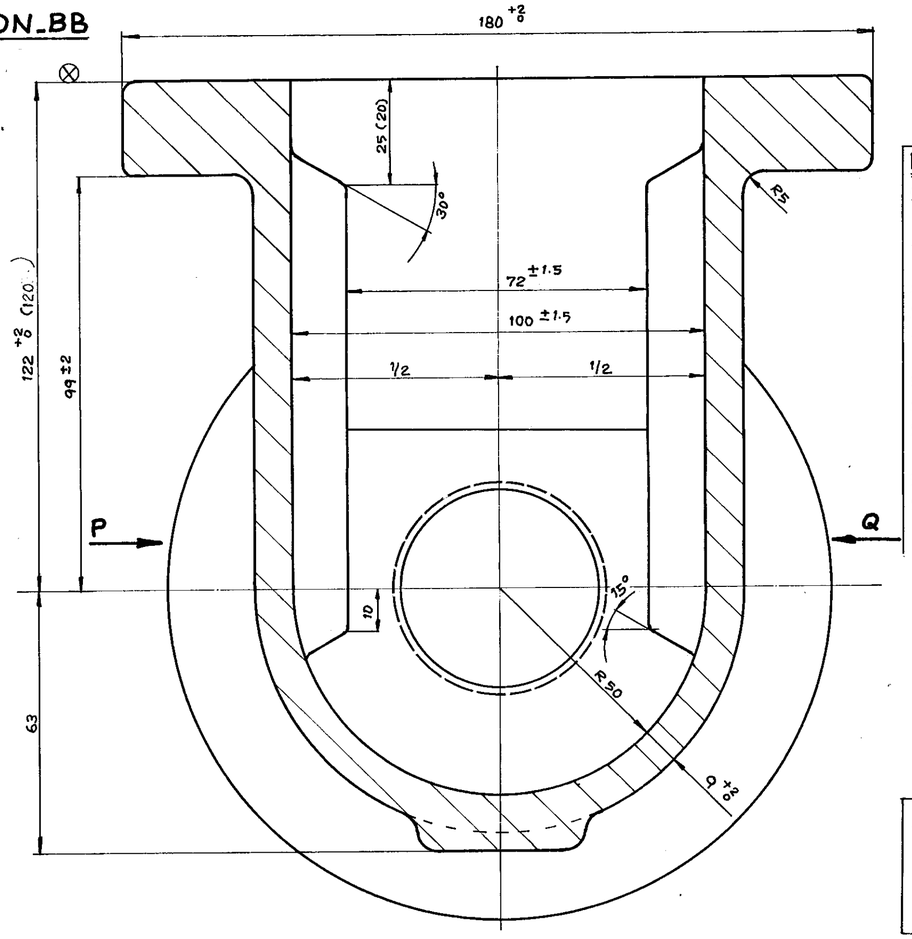


## NOTES :-

01. NECESSARY MACHINING ALLOWANCES HAVE BEEN ADDED IN THIS DRG. ON MACHINABLE SURFACES.

02. UNSPECIFIED CASTING RADII R3-R5.

03. 100/ CASTING SURFACES MUST BE OF HIGH QUALITY WITHOUT SURFACE UNEVENNESS.

04. HEIGHT OF CASTING LETTERS 12MM.

05. ⊗ SURFACES TO BE MACHINED.

06. FINISH MACHINED DIMENSIONS ARE INDICATED WITHIN BRACKETS.

07. RISER REMAINS ARE TO BE REMOVED SUITABLY.

08. CASTING SHALL COMPLY WITH REQUIREMENTS OF APPLICABLE TDC

## SPECIAL NOTE :

01. GUIDE RIB DIMENSIONS TO BE MAINTAINED WITHIN THE TOLERENCES INDICATED.

02. BOTH GUIDE RIBS TO BE COPLANAR AND TRUELY VERTICAL.

## SECTION_CC

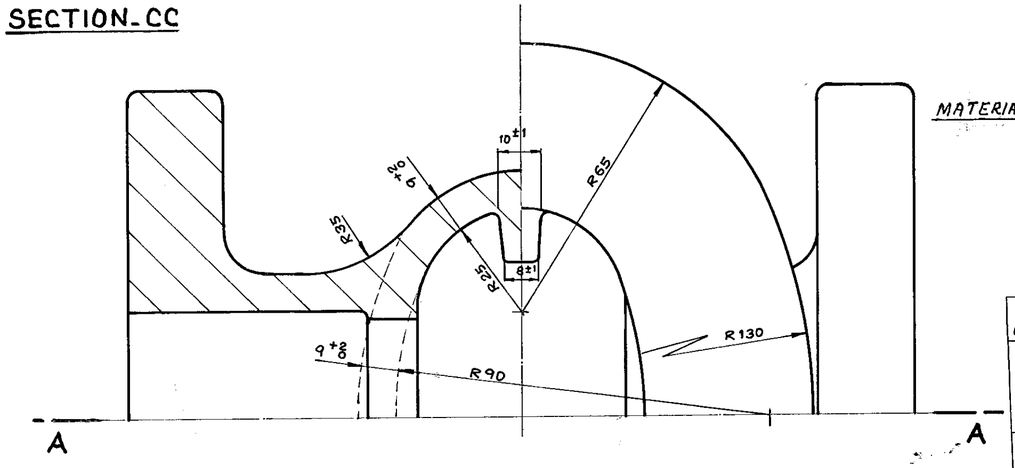


## CAST IDENTIFICATION MARKING

VIEW_P

BHEL
2
150

VIEW_Q

SUPPLIER'S CODE
MELT No.
INSPECTION SEAL
MATERIAL MARK

| SL NO. | MATL. CODE / CASTING DRG. NO | MATL. SPECN. | MATL MARK TO BE CAST. | TYPE NO. |
|---|---|---|---|---|
| 01. | 92027056 / 2_V_N073_03401R/03 | ASTM A216 WCB NORMALISED | A216 WCB | N073 |

# BHARAT HEAVY ELECTRICALS LTD.,
BOILER PLANT UNIT, TIRUCHIRAPALLI-14

| | | | |
|---|---|---|---|
| FIRST ANGLE | SCALE N.T.S | DRAWN: PRABAKAR | TOTAL NET WT.(KG) 14.1 |
| | | CHECKED: J.D.PAL | TYPE |
| | | APPROVED: S.KUMAR | |
| ALL DIMENSIONS IN MILLIMETRES | | DATE 03.11.89 | NEW/OLD DRG. NO. |

TITLE: BODY 50_150 CLASS

DRAWING NO. 2_V_N073-03401R

REVISION 03

CAUTION

THE INFORMATION CONTAINED IN THIS DRAWING IS THE PROPERTY OF BHARAT HEAVY ELECTRICALS LTD., BOILER PLANT UNIT, TIRUCHY-14 AND SHALL NOT BE USED WITHOUT THEIR EXPRESS WRITTEN PERMISSION IN ANY FORM OR PART THEREOF FOR ANY OTHER PURPOSE THAN FOR WHICH IT IS SENT TO YOU.

33-114

| REV. | DATE | ALTD:- / CHD&APPD:- |
|---|---|---|
| 04 | | |

| REV. | DATE | ALTD: T.C. / CHD&APPD |
|---|---|---|
| 03 | 28.2.97 | |

NOTES UPDATED
REFER DCN.CS:0662

| REV. | DATE | ALTD:-T.C. / CHD&APPD:- |
|---|---|---|
| 02 | 08.05.96 | |

HYD. TEST PR. NOTE DELETED.
REFER DCN. CS0579

| REV. | DATE | ALTERED (LRB) / CHECKED |
|---|---|---|
| 01 | 2.9.94 | |

ZONE
1) NOTE No. 10 MODIFIED.
2) NOTE No. 11. ADDED.
3) DCN. NO. CS: 0392

TP-DG-2-V-N826-08121R
CORPORATE DRG ID

DRAWING NO 2-V-N826-08121R

ALL DIMENSIONS ARE IN MILLIMETRES. FOR TOLERANCES OF UNTOLERANCED DIMENSIONS DURING MANUFACTURE REFER RELEVANT QCP / QP

## SECTION BB

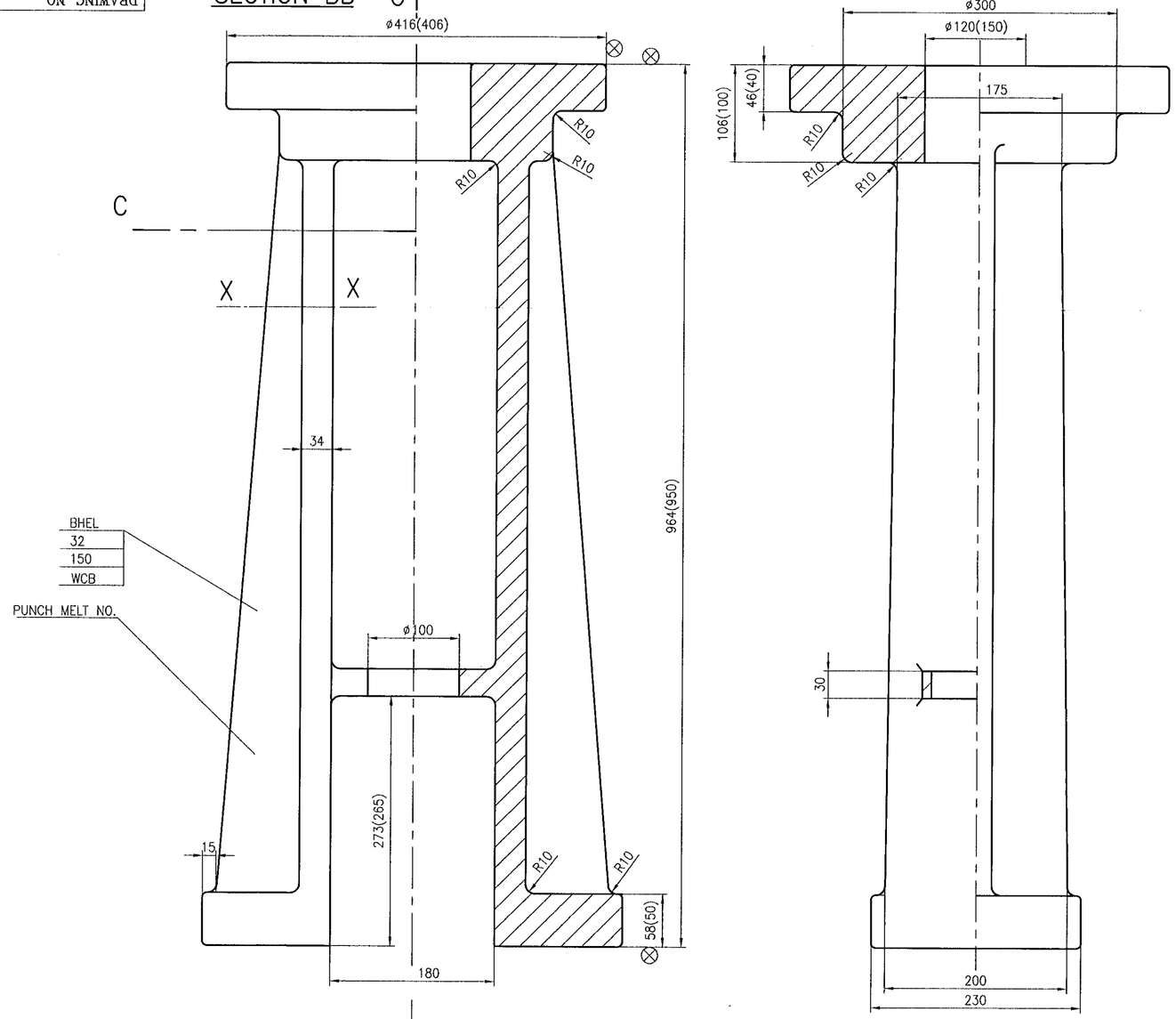


## SECTION XX

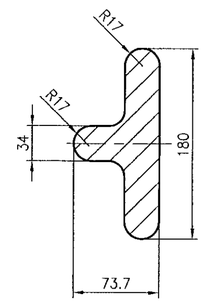


## SECTION CC

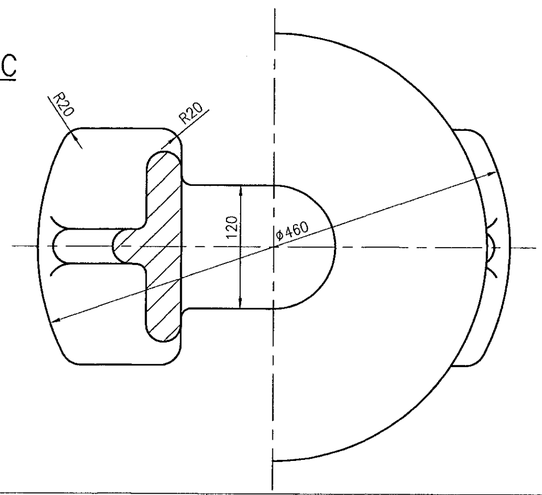


NOTES:

1. CASTING SHALL COMPLY WITH THE REQUIREMENT OF LATEST APPLICABLE QUALITY PROCEDURE IN ALL RESPECTS.
2. NECESSARY ALLOWANCES HAVE BEEN ADDED ON ALL MACHINABLE SURFACES.
3. PERMISSIBLE DIMENSIONAL DEVIATIONS OF CASTING SURFACES REFER LATEST APPLICABLE QUALITY PROCEDURE
4. FINISH MACHINED DIMENSIONS ARE INDICATED WITHIN BRACKETS FOR REFERENCE ONLY.
5. UNSPECIFIED CASTING RADII 3–5mm.
6. ⊗ SURFACE TO BE MACHINED.
7. HEIGHT OF CASTING LETTERS 20mm.

| No OFF | DESCRIPTION | MATL CODE | MATL SPECN | HEAT TREATMENT | SCRAP SORT | NET WT (kg) | GROSS WT (kg) | DRAWING No | ITEM No |
|---|---|---|---|---|---|---|---|---|---|
| | | 922011790000 | A216 WCB / CERTIFY | NR | | | 200 | | |

TYPE OF PRODUCT
OR NAME OF
CUSTOMER/PROJECT

BHARAT HEAVY ELECTRICALS LTD.,
UNIT: HIGH PRESSURE BOILER PLANT.
TIRUCHIRAPALLI-620014.
365-120

| | NAME | SIGN | DATE | NO.OF VAR. |
|---|---|---|---|---|
| DRN | V.BAIRAVAN | | 2.9.99 | |
| CHD | R.L.NARAYANAN | | 4.9.99 | |
| APPD | M.RAJAKUMAR | | 4/9/99 | |

| REV | DATE | ALTERED |
|---|---|---|
| | | CHD & APPD |

ZONE

DEPT V L
CODE 320
SCALE N T S
WEIGHT (KG). 200.0
REFERENCE INFORMATIONS
NO. OF ITEMS

TITLE: YOKE 32"/150C GV
CARD CODE U 01
DRAWING NO. 2-V-N826-08121R
REV

Size A2

CAUTION: The information on this document is the property of BHARAT HEAVY ELECTRICALS LTD. It must not be used directly or indirectly in any way detrimental to the interest of the company.

TP-DG-2-V-N826-08121R
CORPORATE DRG ID

ALL DIMENSIONS ARE IN MILLIMETRES. FOR TOLERANCES OF UNTOLERANCED DIMENSIONS DURING MANUFACTURE REFER RELEVANT QCP / QP.

DRAWING NO. 3-V-0000-02953R

| SL. NO. | CASTING DRG. NO. | COMP.CODE | MATL. SPECN. | | ØD | ØD2 | H | NET Wt. | APPLICABLE VALVE | REMARKS |
|---|---|---|---|---|---|---|---|---|---|---|
| 01 | 3-V-2478-02953R/03 | 92 001 091 | A217 CA15 | | 105 | 60 | 45 | 1.92 | 3"-C300-SV | |
| 02 | 3-V-2479-02953R/03 | 92 001 092 | A217 CA15 | | 140 | 70 | 42 | 3.8 | 4"-C300-SV | |
| 03 | 3-V-2480-02953R/03 | 92 001 098 | A217 CA15 | | 184 | 130 | 50 | 5.2 | 6"-C300-SV | |
| 04 | 3-V-2481-02953R/03 | 92 001 099 | A217 CA15 | | 240 | 175 | 52 | 8.6 | 8"-C300-SV | |
| 05 | 3-V-N672-02953R | 92 001 521 | A351-CF8 | | 66 | 45 | 280 | 5.1 | 2"-C150/ C300-GV | NOTE 1 |
| 06 | 3-V-Z004-02953R | 92 001 522 | A351-CF8 | | 82 | 46 | 260 | 9.5 | 2"-C150-FV | NOTE 1 |
| 07 | 3-V-Z037-02953R | 92 001 523 | A351-CF8 | CERTIFY | 106 | 70 | 24 | 1.2 | 3"-C150-FV | |
| 08 | 3-V-P394-02953R | 92 001 524 | A351-CF8 | | 105 | 60 | 45 | 3.1 | 3"-C300-RV | |
| 09 | 3-V-Z051-02953R | 92 201 584 | A351-CF8M | | 106 | 70 | 24 | 1.2 | 3"-C150-FV | |
| 10 | 3-V-Z011-02953R | 92 201 585 | A351-CF8M | | 136 | 95 | 27 | 1.5 | 4"-C150-FV | |
| 11 | 3-V-Z057-02953R | 92 201 586 | A351-CF8M | | 82 | 46 | 260 | 9.5 | 2"-C150-FV | NOTE 1 |
| 12 | 3-V-P361-02953R | 92 201 587 | A351-CF8M | | 105 | 60 | 45 | 3.1 | 3"-C300-RV | |
| 13 | 3-V-P408-02953R | 92 201 588 | A351-CF8M | | 140 | 70 | 42 | 3.8 | 4"-C300-RV | |
| 14 | 3-V-P439-02953R | 92 201 589 | A351-CF8M | | 184 | 130 | 50 | 5.2 | 6"-C300-RV | |
| 15 | 3-V-P462-02953R | 92 201 590 | A351-CF8M | | 240 | 175 | 52 | 8.6 | 8"-C300-RV | |
| 16 | 3-V-P366-02953R/01 | 92 201 615 | A217 CA15 | | 270 | 192 | 48 | 10.6 | 10"-C300-RV | |
| 17 | 3-V-Z033-02953R | 92 201 673 | A351-CF8 | | 136 | 95 | 27 | 1.5 | 4"-C150-FV | |

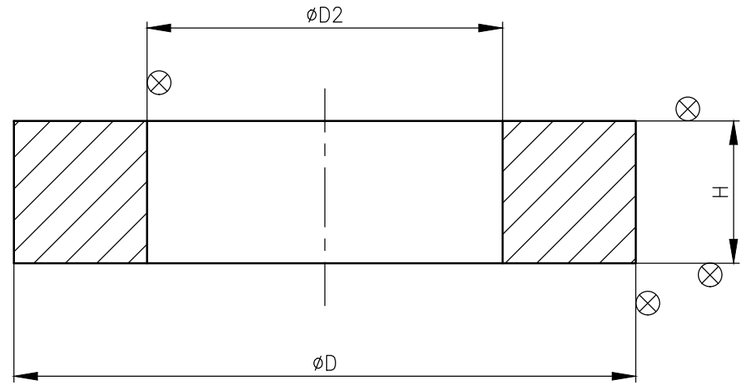


## NOTES:-

1. TEN NOS ARE TO BE MADE FROM A SINGLE CASTING.
2. CASTING SHALL BE SUPPLIED WITH THE HARDENED & TEMPERED CONDITION, WITH A MIN. HARDNESS LEVEL OF 250 BHN & 280 BHN. MAX
3. NECESSARY MACHINING ALLOWANCES HAVE BEEN ADDED IN THIS DRG. ON ALL SURFACES TO BE MACHINED.
4. CASTING SHALL COMPLY REQUIREMENTS OF LATEST APPLICABLE QUALITY PROCEDURE.
5. ⊗ – INDICATES THE SURFACES WHICH ARE TO BE MACHINED FURTHER.
6. PUNCH TYPE NO * & SUPPLIER'S CODE.
   MATL. SPECN.
   MELT NO.

| NO OFF | DESCRIPTION | MATL CODE | MATL SPECN | HEAT TREATMENT | SCRAP SORT | NET WT (kg) | GROSS WT (kg) | DRAWING No | ITEM No |
|---|---|---|---|---|---|---|---|---|---|
| – | – | – | – | – | – | – | – | – | – |

TYPE OF PRODUCT OR NAME OF CUSTOMER/PROJECT: CS

DRG. REDRAWN WITH REV.06 ON 29.06.2007

BHARAT HEAVY ELECTRICALS LTD.
UNIT: HIGH PRESSURE BOILER PLANT.
TIRUCHIRAPALLI 620014.
365-121

| | NAME | SIGN | DATE | NO.OF VAR. |
|---|---|---|---|---|
| DRN | A.S.PANDY | | 29.06.07 | |
| CHD | T.R.RAMAMURTHY | | 29.06.07 | |
| APPD | P.BOOMINATHAN | | 29.06.07 | |

DEPT VL
CODE 320
SCALE NTS
WEIGHT (KG). –
REFERENCE INFORMATIONS: CAD:C302953R
NO. OF ITEMS

TITLE: SEAT RING
CARD CODE: U 01
DRAWING NO. 3-V-0000-02953R
REV 07

| REV | DATE | ALTERED | | REV | DATE | ALTERED | |
|---|---|---|---|---|---|---|---|
| 07 | 12.09.15 | M.SELVAM | CHD & APPD MS & SSK | 06 | 29.06.07 | CHD & APPD | T.R.R.MURTHY P.B.NATHAN |
| | | MATERIAL A217 CA15 WAS A351 CA15 DCP:801998 | | | | SL. No.17 INCLUDED | |

CAUTION: The information on this document is the property of BHARAT HEAVY ELECTRICALS LTD. It must not be used directly or indirectly in any way detrimental to the interest of the company.

Size A3

ALL DIMENSIONS ARE IN MILLIMETRES. FOR TOLERANCES OF UNTOLERANCED DIMENSIONS DURING MANUFACTURE REFER RELEVANT QCP / QP.

DRAWING NO. 3-V-0000-06599R

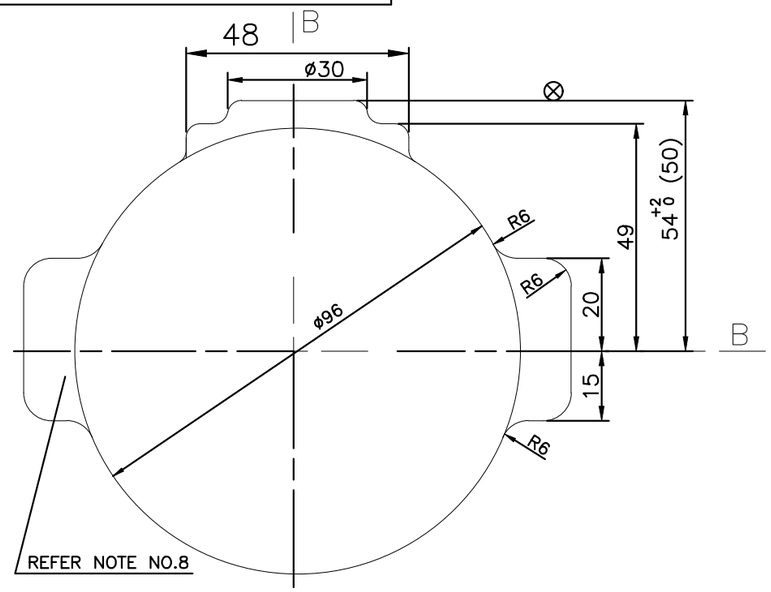


SECTION-AA

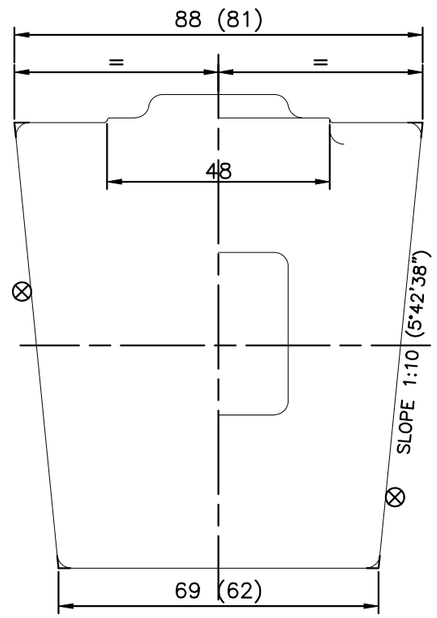


SECTION-BB

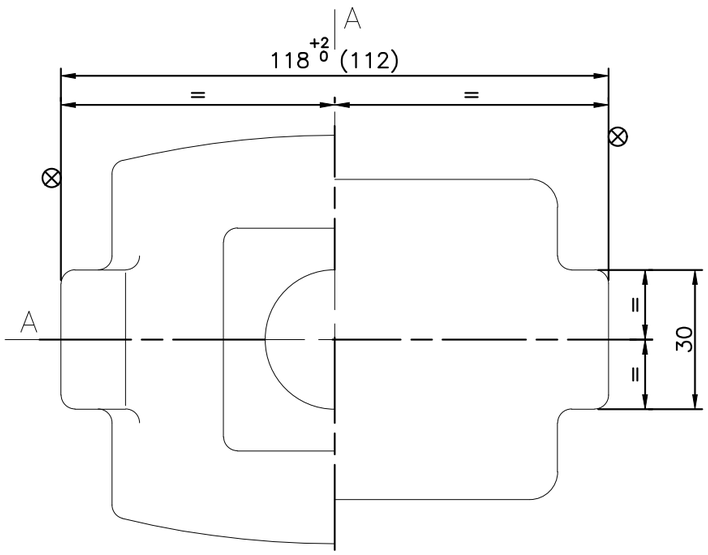


## NOTES:-

1. NECESSARY MACHINING ALLOWANCES HAVE BEEN ADDED ON ALL MACHINABLE SURFACES
2. ⊗ SURFACES TO BE MACHINED
3. UNSPECIFIED CASTING RADII R3-R5
4. 100/▽ CASTING SURFACES MUST BE HIGH QUALITY WITHOUT SURFACE UNEVENNESS
5. PERMISSIBLE DIMENSIONAL DEVIATION OF CASTING SURFACES REFER CHART
6. FINISH MACHINED DIMENSIONS ARE INDICATED WITHIN BRACKETS
7. CASTING SHALL MEET THE REQUIREMENTS OF TDC (WITH LATEST REVISION)
8. THE FOLLOWING IDENTIFICATION MARKING TO BE PUNCHED IN THE ZONE SPECIFIED IN THE DRG.
   3"-300C
   MATL. MARK
   SUPPLIERS CODE
   MELT NO.
9. # MARKED ITEMS IGC TEST SHALL BE CONDUCTED.

| SL No. | DRAWING NO. | MATL CODE | MATL SPECN | HEAT TREATMENT | SCRAP SORT | NET WT (kg) | GROSS WT (kg) | MATL.MARK | ITEM No |
|---|---|---|---|---|---|---|---|---|---|
| # 07 | 3.V.U637.06599R/00 | 92 203 551 | A351 CF8 CERTIFY | SH | -- | 4.6 | -- | CF8 | -- |
| 06 | 3.V.N258.06599R/01 | 92 200 481 | A217 WC9 CERTIFY | N & T | -- | 4.6 | -- | WC9 | -- |
| 05 | 3.V.N257.06599R/01 | 92 200 480 | A217 WC6 CERTIFY | N & T | -- | 4.6 | -- | WC6 | -- |
| 04 | 3.V.N256.06599R/01 | 92 200 479 | A216 WCC CERTIFY | NR | -- | 4.6 | -- | WCC | -- |
| 03 | 3.V.N373.06599R/00 | 92 200 478 | A351 CF8M CERTIFY | SH | -- | 4.6 | -- | CF8M | -- |
| 02 | 3.V.N364.06599R/00 | 92 200 438 | A351 CF8 CERTIFY | SH | -- | 4.6 | -- | CF8 | -- |
| 01 | 3.V.N049.06599R/00 | 92 034 284 | A216 WCB CERTIFY | NR | -- | 4.6 | -- | A216 WCB | -- |

| REV | DATE | ALTERED R.P.SINGH |
|---|---|---|
| 04 | 10.04.18 | CHD & APPD SSK & KRS |

SL.NO.07 INCLUDED

CAUTION: The information on this document is the property of BHARAT HEAVY ELECTRICALS LTD. It must not be used directly or indirectly in any way detrimental to the interest of the company.

TYPE OF PRODUCT OR NAME OF CUSTOMER/PROJECT: CS

DRG REDRAWN WITH REV.04 ON.10.04.18

BHARAT HEAVY ELECTRICALS LTD.
UNIT: HIGH PRESSURE BOILER PLANT.
TIRUCHIRAPALLI 620014.
365-121

| | NAME | SIGN | DATE | NO.OF VAR. |
|---|---|---|---|---|
| DRN | T.R.RAMAMURTHY | | 12.06.89 | |
| CHD | N.DHANAPAL | | 12.06.89 | |
| APPD | S.KUMAR | | 12.06.89 | |

| DEPT | SCALE | WEIGHT (KG). | REFERENCE INFORMATIONS | NO. OF ITEMS |
|---|---|---|---|---|
| VL | NTS. | 4.6 | CAD.REF.C306599R | |
| CODE 320 | | | | |

| TITLE | CARD CODE | DRAWING NO. | REV |
|---|---|---|---|
| WEDGE (3"-300C) | U 01 | 3-V-0000-06599R | 04 |

Size A3

ALL DIMENSIONS ARE IN MILLIMETRES. FOR TOLERANCES OF UNTOLERANCED DIMENSIONS DURING MANUFACTURE REFER RELEVANT QCP / QP.

DRAWING NO. 3-V-0000-24641R

| SL.No. | DRAWING No. | MATL.SPECN. | MATL.CODE. | WT. (kg) | MATL.MARK TO BE PUNCHED * | SCRAP SORT | DIMENSIONS ØD | L | L1 | R | APPLICABLE VALVES |
|---|---|---|---|---|---|---|---|---|---|---|---|
| 01 | 3-V-5158-24641R | A216-WCB NORMALISED ATTEST | 92 201 739 | 8.10 | WCB | 10 | 214 | 54 | 28 | 15 | 2"-150C FV |
| 02 | 3-V-5157-24641R | | 92 201 738 | 12.2 | WCB | 10 | 264 | 54 | 28 | 15 | 3"-150C FV |
| 03 | 3-V-5156-24641R | | 92 201 737 | 15.5 | WCB | 10 | 298 | 54 | 28 | 15 | 4"-150C FV |
| 04 | 3-V-5151-24641R | | 92 201 741 | 33.0 | WCB | 10 | 374 | 68 | 38 | 15 | 6"-150C & 300C FV |
| 05 | 3-V-5154-24641R | | 92 201 736 | 48.0 | WCB | 10 | 440 | 69 | 40 | 15 | 8"-150C FV |
| 06 | 3-V-5153-24641R | | 92 201 735 | 14.7 | WCB | 10 | 256 | 62 | 36 | 15 | 2"-300C FV |
| 07 | 3-V-5152-24641R | | 92 201 740 | 17.0 | WCB | 10 | 276 | 62 | 36 | 15 | 3"-300C FV |
| 08 | 3-V-5144-24641R | | 92 201 734 | 20.0 | WCB | 10 | 298 | 62 | 36 | 15 | 4"-300C FV |
| 09 | 3-V-5150-24641R | | 92 201 742 | 54.8 | WCB | 10 | 444 | 73 | 45 | 15 | 8"-300C FV |

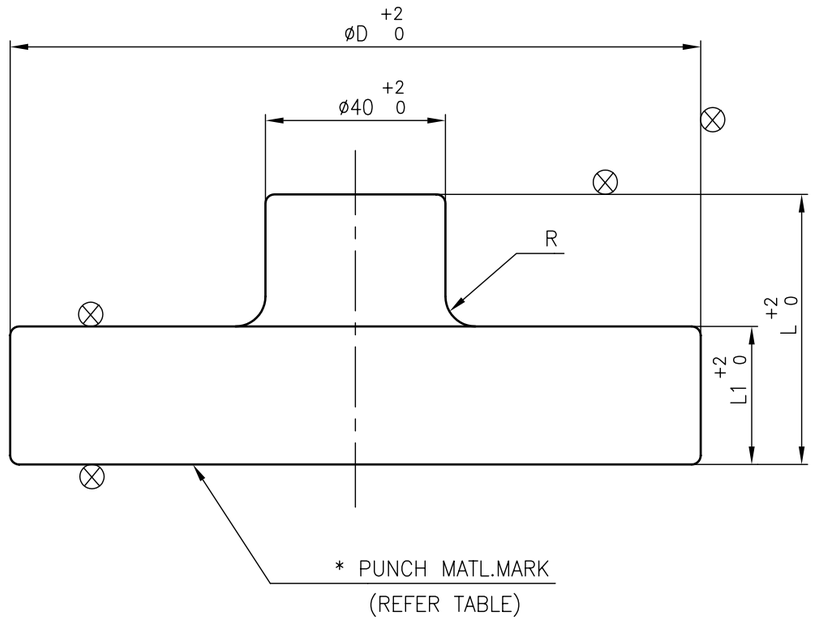


## NOTES:-

1. UNSPECIFIEDCASTING RADII-R3
2. ⊗ INDICATES THE SURFACES WHICH ARE TO BE MACHINED FURTHER.
3. CASTING SHALL COMPLY WITH REQUIRMENT OF LATEST APPLICABLE TDC.

| NO OFF | DESCRIPTION | MATL CODE | MATL SPECN | HEAT TREATMENT | SCRAP SORT | NET WT (kg) | GROSS WT (kg) | DRAWING No | ITEM No |
|---|---|---|---|---|---|---|---|---|---|
| | | | | | | | | | |

TYPE OF PRODUCT OR NAME OF CUSTOMER/PROJECT: CS

BHARAT HEAVY ELECTRICALS LTD.
UNIT: HIGH PRESSURE BOILER PLANT.
TIRUCHIRAPALLI - 620014.
365-121

| | NAME | SIGN | DATE | NO.OF VAR. |
|---|---|---|---|---|
| DRN | T.R.RAMAMURHY | | 22.12.07 | |
| CHD | T.R.RAMAMURHY | | 22.12.07 | |
| APPD | P.BOOMINATHAN | | 22.12.07 | |

DEPT VL
CODE 320
SCALE N T S
WEIGHT (KG). REFER TABLE
REFERENCE INFORMATIONS CAD: C324641R
NO. OF ITEMS

TITLE: COVER (CASTING)
CARD CODE U 01
DRAWING NO. 3-V-0000-24641R
REV 00

| REV | DATE | ALTERED |
|---|---|---|
| | | CHD & APPD |

CAUTION: The information on this document is the property of BHARAT HEAVY ELECTRICALS LTD. It must not be used directly or indirectly in any way detrimental to the interest of the company.

Size A3

ALL DIMENSIONS ARE IN MILLIMETRES. FOR TOLERANCES OF UNTOLERANCED DIMENSIONS DURING MANUFACTURE REFER RELEVANT QCP / QP.

DRAWING NO. 3-V-0000-24641R

| SL.No. | DRAWING No. | MATL.SPECN. | MATL.CODE. | WT. (kg) | MATL.MARK TO BE PUNCHED * | SCRAP SORT | DIMENSIONS ØD | L | L1 | R | APPLICABLE VALVES |
|---|---|---|---|---|---|---|---|---|---|---|---|
| 01 | 3-V-5158-24641R | A216-WCB NORMALISED ATTEST | 92 201 739 | 8.10 | WCB | 10 | 214 | 54 | 28 | 15 | 2"-150C FV |
| 02 | 3-V-5157-24641R | | 92 201 738 | 12.2 | WCB | 10 | 264 | 54 | 28 | 15 | 3"-150C FV |
| 03 | 3-V-5156-24641R | | 92 201 737 | 15.5 | WCB | 10 | 298 | 54 | 28 | 15 | 4"-150C FV |
| 04 | 3-V-5151-24641R | | 92 201 741 | 33.0 | WCB | 10 | 374 | 68 | 38 | 15 | 6"-150C & 300C FV |
| 05 | 3-V-5154-24641R | | 92 201 736 | 48.0 | WCB | 10 | 440 | 69 | 40 | 15 | 8"-150C FV |
| 06 | 3-V-5153-24641R | | 92 201 735 | 14.7 | WCB | 10 | 256 | 62 | 36 | 15 | 2"-300C FV |
| 07 | 3-V-5152-24641R | | 92 201 740 | 17.0 | WCB | 10 | 276 | 62 | 36 | 15 | 3"-300C FV |
| 08 | 3-V-5144-24641R | | 92 201 734 | 20.0 | WCB | 10 | 298 | 62 | 36 | 15 | 4"-300C FV |
| 09 | 3-V-5150-24641R | | 92 201 742 | 54.8 | WCB | 10 | 444 | 73 | 45 | 15 | 8"-300C FV |

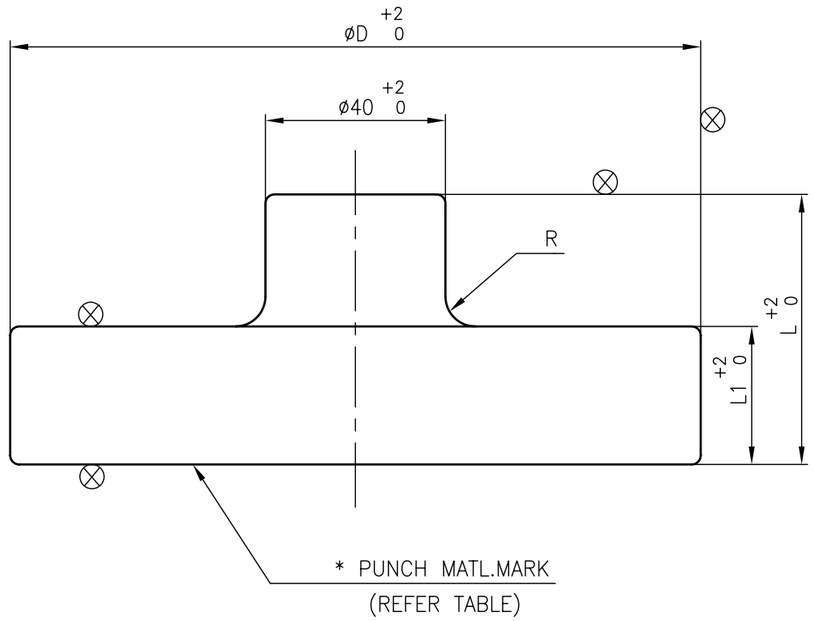


## NOTES:-

1. UNSPECIFIEDCASTING RADII-R3
2. ⊗ INDICATES THE SURFACES WHICH ARE TO BE MACHINED FURTHER.
3. CASTING SHALL COMPLY WITH REQUIRMENT OF LATEST APPLICABLE TDC.

| NO OFF | DESCRIPTION | MATL CODE | MATL SPECN | HEAT TREATMENT | SCRAP SORT | NET WT (kg) | GROSS WT (kg) | DRAWING No | ITEM No |
|---|---|---|---|---|---|---|---|---|---|
| | | | | | | | | | |

TYPE OF PRODUCT OR NAME OF CUSTOMER/PROJECT: CS

BHARAT HEAVY ELECTRICALS LTD.
UNIT: HIGH PRESSURE BOILER PLANT.
TIRUCHIRAPALLI - 620014.
365-121

| | NAME | SIGN | DATE | NO.OF VAR. |
|---|---|---|---|---|
| DRN | T.R.RAMAMURHY | | 22.12.07 | |
| CHD | T.R.RAMAMURHY | | 22.12.07 | |
| APPD | P.BOOMINATHAN | | 22.12.07 | |

DEPT VL
CODE 320
SCALE N T S
WEIGHT (KG). REFER TABLE
REFERENCE INFORMATIONS CAD: C324641R
NO. OF ITEMS

TITLE: COVER (CASTING)
CARD CODE U 01
DRAWING NO. 3-V-0000-24641R
REV 00

| REV | DATE | ALTERED |
|---|---|---|
| | | CHD & APPD |

CAUTION: The information on this document is the property of BHARAT HEAVY ELECTRICALS LTD. It must not be used directly or indirectly in any way detrimental to the interest of the company.

Size A3

ALL DIMENSIONS ARE IN MILLIMETRES. FOR TOLERANCES OF UNTOLERANCED DIMENSIONS DURING MANUFACTURE REFER RELEVANT QCP / QP.

DRAWING NO. 3-V-0000-25332R

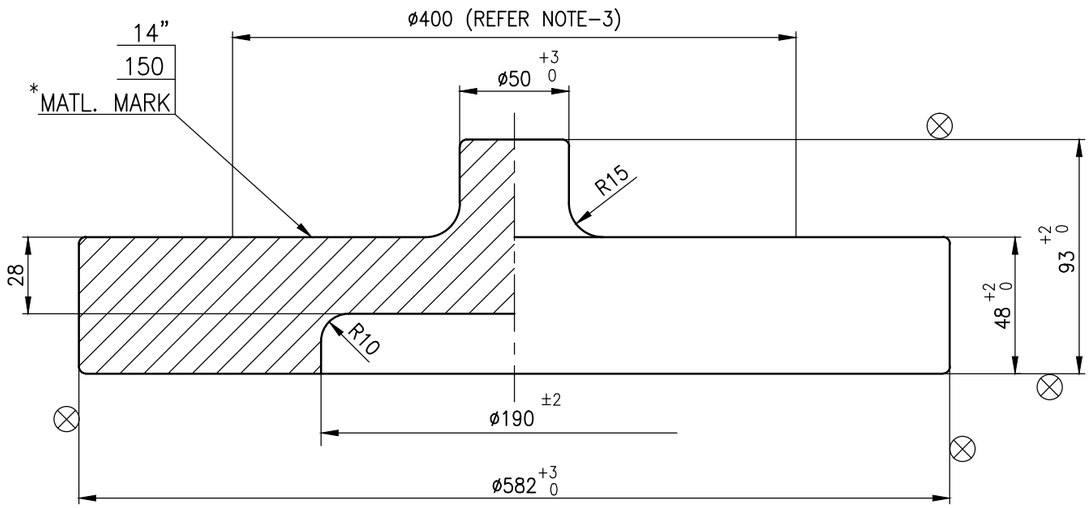


## NOTES:-

1 . NECESSARY MACHINING ALLOWANCES HAVE BEEN ADDED ON ALL MACHINABLE SURFACES
2 . PERMISIBLE DIMENSIONAL DEVIATIONS OF NON TOLERANCED CASTING DIMENSIONS – REFER LATEST APPLICABLE QUALITY WORK INSTRUCTION.
3 . ALL CAST LETTERS, MELT. No. & INSPECTION SEAL SHALL BE MADE WITHIN THE CIRCLE ø400 AS SHOWN.
4 . CASTING SHALL COMPLY WITH THE REQUIREMENTS OF LATEST APPLICABLE QUALITY WORK INSTRUCTIONS.
5 . UNSPECIFIED CASTING RADII 3 – 5 MM
6 . HEIGHT OF CASTING LETTERS 15MM
7. ⊗ SURFACE TO BE FURTHER MACHINED.

| SL. NO. | DRAWING NO. | MATL. SPECN. | | MATL. CODE | *MATL. MARK | |
|---|---|---|---|---|---|---|
| 03 | 3-V-Z084-25332R | CI,IS-210,GrFG260, AN | ATTEST | 922032240000 | CI | |
| 02 | 3-V-Z083-25332R | SA217 WC9, NT | | 922032230000 | WC9 | |
| 01 | 3-V-Z082-25332R | SA216 WCB, NR | | 922032220000 | WCB | |

| NO OFF | DESCRIPTION | MATL CODE | MATL SPECN | HEAT TREATMENT | SCRAP SORT | NET WT (kg) | GROSS WT (kg) | DRAWING No | ITEM No |
|---|---|---|---|---|---|---|---|---|---|
| | | | | | | | | | |

TYPE OF PRODUCT
OR NAME OF
CUSTOMER/PROJECT

BHARAT HEAVY ELECTRICALS LTD.,
UNIT: HIGH PRESSURE BOILER PLANT.
TIRUCHIRAPALLI-620014.
365-121

| | NAME | SIGN | DATE | NO.OF VAR. |
|---|---|---|---|---|
| DRN | V.BAIRAVAN | | 11.02.14 | |
| CHD | S.SATHEES | | 11.02.14 | |
| APPD | K.RAJASEKARAN | | 11.02.14 | |

| DEPT | SCALE | WEIGHT (KG). | REFERENCE INFORMATIONS | NO. OF ITEMS |
|---|---|---|---|---|
| VL | N T S | 96.5 | | |
| CODE 320 | | | | |

TITLE: COVER
CASTING 14"/150CLASS

CARD CODE: U 01

DRAWING NO. 3-V-0000-25332R (REFER TABLE)

REV

| REV | DATE | ALTERED |
|---|---|---|
| | | CHD & APPD |

CAUTION: The information on this document is the property of BHARAT HEAVY ELECTRICALS LTD. It must not be used directly or indirectly in any way detrimental to the interest of the company.

Size A3

ALL DIMENSIONS ARE IN MILLIMETRES. FOR TOLERANCES OF UNTOLERANCED DIMENSIONS DURING MANUFACTURE REFER RELEVANT QCP / QP.

DRAWING NO. 3-V-0000-25336R

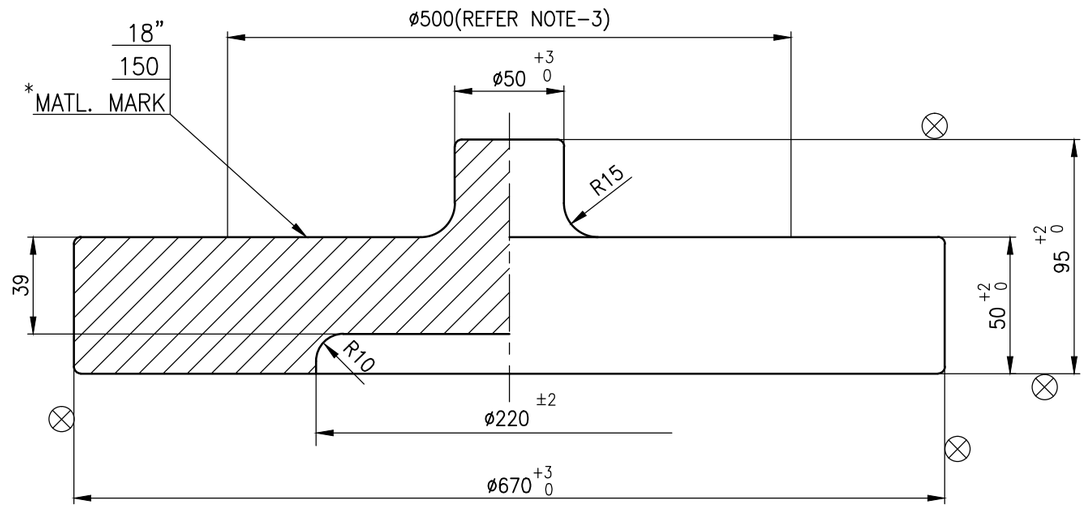


## NOTES:-

1 . NECESSARY MACHINING ALLOWANCES HAVE BEEN ADDED ON ALL MACHINABLE SURFACES
2 . PERMISIBLE DIMENSIONAL DEVIATIONS OF NON TOLERANCED CASTING DIMENSIONS – REFER LATEST APPLICABLE QUALITY WORK INSTRUCTION.
3 . ALL CAST LETTERS, MELT. No. & INSPECTION SEAL SHALL BE MADE WITHIN THE CIRCLE ø500 AS SHOWN.
4 . CASTING SHALL COMPLY WITH THE REQUIREMENTS OF LATEST APPLICABLE QUALITY WORK INSTRUCTIONS.
5 . UNSPECIFIED CASTING RADII 3 – 5 MM
6 . HEIGHT OF CASTING LETTERS 15MM
7. ⊗ SURFACE TO BE FURTHER MACHINED.

| SL. NO. | DRAWING NO. | MATL. SPECN. | | MATL. CODE | *MATL. MARK | |
|---|---|---|---|---|---|---|
| 03 | 3-V-Z087-25336R | CI, IS-210, Gr.FG260, AN | ATTEST | 922032400000 | CI | |
| 02 | 3-V-Z086-25336R | SA217 WC9, NT | | 922032390000 | WC9 | |
| 01 | 3-V-Z085-25336R | SA216 WCB, NR | | 922032380000 | WCB | |

| NO OFF | DESCRIPTION | MATL CODE | MATL SPECN | HEAT TREATMENT | SCRAP SORT | NET WT (kg) | GROSS WT (kg) | DRAWING No | ITEM No |
|---|---|---|---|---|---|---|---|---|---|
| | | | | | | | | | |

TYPE OF PRODUCT
OR NAME OF
CUSTOMER/PROJECT

BHARAT HEAVY ELECTRICALS LTD.,
UNIT: HIGH PRESSURE BOILER PLANT.
TIRUCHIRAPALLI-620014.
365-121

| | NAME | SIGN | DATE | NO.OF VAR. |
|---|---|---|---|---|
| DRN | V.BAIRAVAN | | 03.03.14 | |
| CHD | S.SATHEES | | 03.03.14 | |
| APPD | K.RAJASEKARAN | | 03.03.14 | |

| DEPT | SCALE | WEIGHT (KG). | REFERENCE INFORMATIONS | NO. OF ITEMS |
|---|---|---|---|---|
| VL | N T S | 135 | | |
| CODE 320 | | | | |

TITLE: COVER
CASTING 18"/150CLASS

CARD CODE: U 01

DRAWING NO. 3-V-0000-25336R (REFER TABLE)

REV

| REV | DATE | ALTERED |
|---|---|---|
| | | CHD & APPD |

CAUTION: The information on this document is the property of BHARAT HEAVY ELECTRICALS LTD. It must not be used directly or indirectly in any way detrimental to the interest of the company.

Size A3

ALL DIMENSIONS ARE IN MILLIMETRES. FOR TOLERANCES OF UNTOLERANCED DIMENSIONS DURING MANUFACTURE REFER RELEVANT QCP / QP.

DRAWING NO. 3-V-0000-25354R

06

| SL. No. | DRAWING No. | MATL. SPECN. | | MATL. CODE | SIZE/RATING | MATL. MARK * TO BE PUNCHED | WT. IN KG | øD | ød | L | L1 |
|---|---|---|---|---|---|---|---|---|---|---|---|
| 01 | 3-V-Z082-25354R | A216 WCB,AN | CERTIFY | 922032540000 | 350/150CL | WCB | 27.65 | 380 | 69 | 118 | 28 |
| 02 | 3-V-Z083-25354R | A217 WC9,NT | | 9222032550000 | | WC9 | | | | | |
| 03 | 3-V-U555-25354R | A351 CF8,SH | | 922033970000 | | CF8 | | | | | |
| 04 | 3-V-Z085-25354R | A216 WCB,AN | | 922032750000 | 450/150CL | WCB | 68.53 | 495 | 96 | 156 | 41 |
| 05 | 3-V-Z086-25354R | A217 WC9,NT | | 922032760000 | | WC9 | | | | | |
| 06 | 3-V-Z089-25354R | A216 WCB,AN | | 922032920000 | 400/150CL | WCB | 51.84 | 434 | 90 | 148 | 40 |
| 07 | 3-V-Z090-25354R | A217 WC9,NT | | 922032930000 | | WC9 | | | | | |
| 08 | 3-V-U554-25354R | A351 CF8,SH | | 922033930000 | | CF8 | | | | | |
| 09 | 3-V-Z114-25354R | SA995 CD3MN, REF. NOTE | | 922036200000 | | CD3MN | | | | | |
| 10 | 3-V-Z119-25354R | SA351 CF8,SH | | 922037240000 | 450/150CL | CF8 | 68.53 | 495 | 96 | 156 | 41 |
| 11 | 3-V-Z115-25354R | SA995 CD3MN, REF. NOTE | | 922036150000 | 500/150CL | CD3MN | 81.0 | 546 | 100 | 161 | 40 |

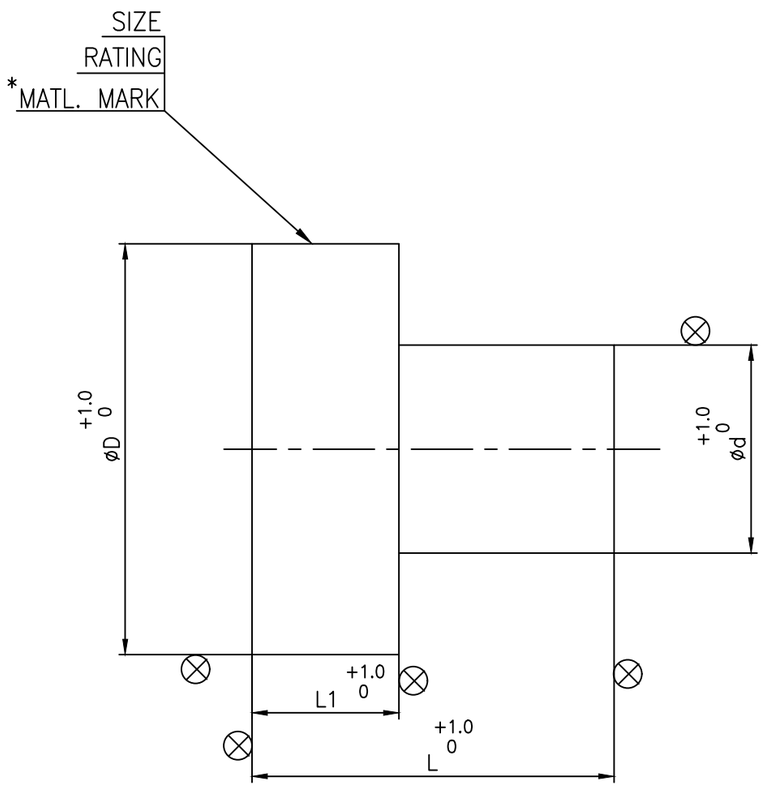


## NOTES:-

1. NECESSARY MACHINING ALLOWANCES HAVE BEEN ADDED ON ALL MACHINABLE SURFACES
2. PERMISIBLE DIMENSIONAL DEVIATIONS OF NON TOLERANCED CASTING DIMENSIONS – REFER LATEST APPLICABLE QUALITY WORK INSTRUCTION.
3. CASTING SHALL COMPLY WITH THE REQUIREMENTS OF LATEST APPLICABLE QUALITY WORK INSTRUCTIONS.
4. UNSPECIFIED CASTING RADII 3 mm
5. HEIGHT OF CASTING LETTERS 15mm
6. ⊗ SURFACE TO BE FURTHER MACHINED.
7. HEAT TREATMENT FOR SA995 CD3MN AS PER ASME STANDARD SA-995 TABLE 1

   (HEAT TO 2050°F [1120°C] MINIMUM FOR SUFFICIENT TIME TO HEAT CASTING UNIFORMLY TO TEMPERATURE AND WATER QUENCH, OR THE CASTING MAY BE FURNACE COOLED TO 1850°F [1010°C] MINIMUM, HOLD FOR 15 MIN MINIMUM AND THEN WATER QUENCH. A RAPID COOL BY OTHER MEANS MAY BE EMPLOYED IN LIEU OF WATER QUENCH.)

| NO OFF | DESCRIPTION | MATL CODE | MATL SPECN | HEAT TREATMENT | SCRAP SORT | NET WT (kg) | GROSS WT (kg) | DRAWING No | ITEM No |
|---|---|---|---|---|---|---|---|---|---|
| – | – | – | – | – | – | – | – | – | – |

| REV | DATE | ALTERED | R.P.SINGH |
|---|---|---|---|
| 03 | 28.12.18 | CHD & APPD | SSK & KRS |
| | | SL. No. 11 INCLUDED. | |

| REV | DATE | ALTERED | R.P.SINGH |
|---|---|---|---|
| 02 | 19.10.18 | CHD & APPD | SSK & KRS |
| | | SL. No. 09 & 10 INCLUDED. NOTES No. 7 INCLUDED. | |

CAUTION: The information on this document is the property of BHARAT HEAVY ELECTRICALS LTD. It must not be used directly or indirectly in any way detrimental to the interest of the company.

TYPE OF PRODUCT OR NAME OF CUSTOMER/PROJECT: H M

BHARAT HEAVY ELECTRICALS LTD.,
UNIT: HIGH PRESSURE BOILER PLANT.
TIRUCHIRAPALLI- 620014.
365-121

| | NAME | SIGN | DATE | NO.OF VAR. |
|---|---|---|---|---|
| DRN | V.BAIRAVAN | | 26.03.14 | |
| CHD | S.SATHEESKUMAR | | 26.03.14 | |
| APPD | K.RAJASEKARAN | | 26.03.14 | |

| DEPT | CODE | SCALE | WEIGHT (KG). | REFERENCE INFORMATIONS | NO. OF ITEMS |
|---|---|---|---|---|---|
| VL | 320 | N T S | REF.TABLE | | |

| TITLE | CARD CODE | DRAWING NO. | REV |
|---|---|---|---|
| FLAP | U 01 | 3-V-0000-25354R | 03 |

Size A3

ALL DIMENSIONS ARE IN MILLIMETRES. FOR TOLERANCES OF UNTOLERANCED DIMENSIONS DURING MANUFACTURE REFER RELEVANT QCP / QP.

DRAWING NO. 3-V-0000-25354R

06

| SL. No. | DRAWING No. | MATL. SPECN. | | MATL. CODE | SIZE/RATING | MATL. MARK * TO BE PUNCHED | WT. IN KG | øD | ød | L | L1 |
|---|---|---|---|---|---|---|---|---|---|---|---|
| 01 | 3-V-Z082-25354R | A216 WCB,AN | CERTIFY | 922032540000 | 350/150CL | WCB | 27.65 | 380 | 69 | 118 | 28 |
| 02 | 3-V-Z083-25354R | A217 WC9,NT | | 9222032550000 | | WC9 | | | | | |
| 03 | 3-V-U555-25354R | A351 CF8,SH | | 922033970000 | | CF8 | | | | | |
| 04 | 3-V-Z085-25354R | A216 WCB,AN | | 922032750000 | 450/150CL | WCB | 68.53 | 495 | 96 | 156 | 41 |
| 05 | 3-V-Z086-25354R | A217 WC9,NT | | 922032760000 | | WC9 | | | | | |
| 06 | 3-V-Z089-25354R | A216 WCB,AN | | 922032920000 | 400/150CL | WCB | 51.84 | 434 | 90 | 148 | 40 |
| 07 | 3-V-Z090-25354R | A217 WC9,NT | | 922032930000 | | WC9 | | | | | |
| 08 | 3-V-U554-25354R | A351 CF8,SH | | 922033930000 | | CF8 | | | | | |
| 09 | 3-V-Z114-25354R | SA995 CD3MN, REF. NOTE | | 922036200000 | | CD3MN | | | | | |
| 10 | 3-V-Z119-25354R | SA351 CF8,SH | | 922037240000 | 450/150CL | CF8 | 68.53 | 495 | 96 | 156 | 41 |
| 11 | 3-V-Z115-25354R | SA995 CD3MN, REF. NOTE | | 922036150000 | 500/150CL | CD3MN | 81.0 | 546 | 100 | 161 | 40 |

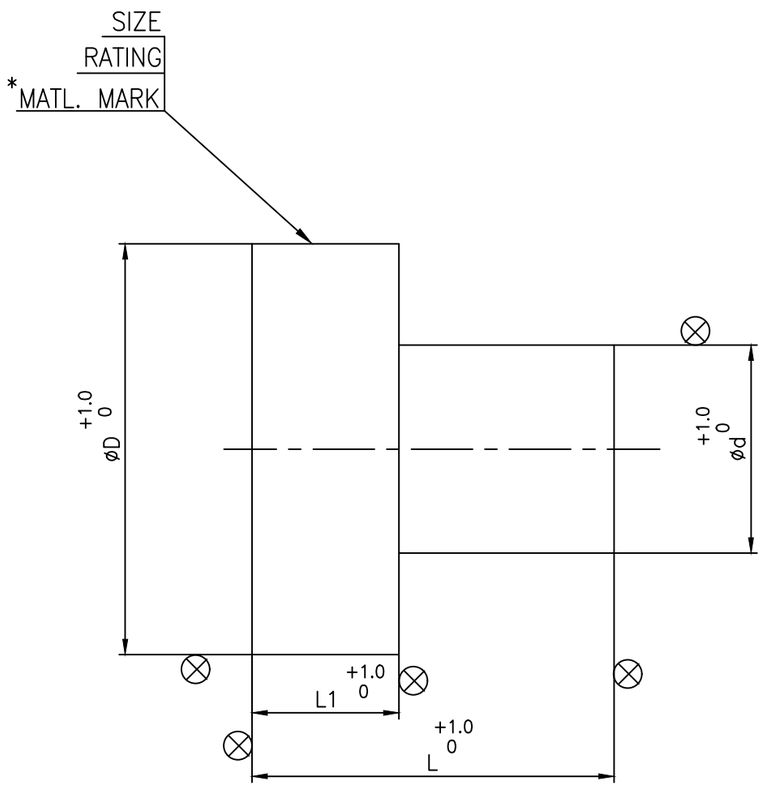


## NOTES:-

1. NECESSARY MACHINING ALLOWANCES HAVE BEEN ADDED ON ALL MACHINABLE SURFACES
2. PERMISIBLE DIMENSIONAL DEVIATIONS OF NON TOLERANCED CASTING DIMENSIONS – REFER LATEST APPLICABLE QUALITY WORK INSTRUCTION.
3. CASTING SHALL COMPLY WITH THE REQUIREMENTS OF LATEST APPLICABLE QUALITY WORK INSTRUCTIONS.
4. UNSPECIFIED CASTING RADII 3 mm
5. HEIGHT OF CASTING LETTERS 15mm
6. ⊗ SURFACE TO BE FURTHER MACHINED.
7. HEAT TREATMENT FOR SA995 CD3MN AS PER ASME STANDARD SA-995 TABLE 1

   (HEAT TO 2050°F [1120°C] MINIMUM FOR SUFFICIENT TIME TO HEAT CASTING UNIFORMLY TO TEMPERATURE AND WATER QUENCH, OR THE CASTING MAY BE FURNACE COOLED TO 1850°F [1010°C] MINIMUM, HOLD FOR 15 MIN MINIMUM AND THEN WATER QUENCH. A RAPID COOL BY OTHER MEANS MAY BE EMPLOYED IN LIEU OF WATER QUENCH.)

| NO OFF | DESCRIPTION | MATL CODE | MATL SPECN | HEAT TREATMENT | SCRAP SORT | NET WT (kg) | GROSS WT (kg) | DRAWING No | ITEM No |
|---|---|---|---|---|---|---|---|---|---|
| – | – | – | – | – | – | – | – | – | – |

| REV | DATE | ALTERED | R.P.SINGH |
|---|---|---|---|
| 03 | 28.12.18 | CHD & APPD | SSK & KRS |
| | | SL. No. 11 INCLUDED. | |

| REV | DATE | ALTERED | R.P.SINGH |
|---|---|---|---|
| 02 | 19.10.18 | CHD & APPD | SSK & KRS |
| | | SL. No. 09 & 10 INCLUDED. NOTES No. 7 INCLUDED. | |

CAUTION: The information on this document is the property of BHARAT HEAVY ELECTRICALS LTD. It must not be used directly or indirectly in any way detrimental to the interest of the company.

TYPE OF PRODUCT OR NAME OF CUSTOMER/PROJECT: H M

BHARAT HEAVY ELECTRICALS LTD.,
UNIT: HIGH PRESSURE BOILER PLANT.
TIRUCHIRAPALLI- 620014.
365-121

| | NAME | SIGN | DATE | NO.OF VAR. |
|---|---|---|---|---|
| DRN | V.BAIRAVAN | | 26.03.14 | |
| CHD | S.SATHEESKUMAR | | 26.03.14 | |
| APPD | K.RAJASEKARAN | | 26.03.14 | |

| DEPT | CODE | SCALE | WEIGHT (KG). | REFERENCE INFORMATIONS | NO. OF ITEMS |
|---|---|---|---|---|---|
| VL | 320 | N T S | REF.TABLE | | |

| TITLE | CARD CODE | DRAWING NO. | REV |
|---|---|---|---|
| FLAP | U 01 | 3-V-0000-25354R | 03 |

Size A3

ALL DIMENSIONS ARE IN MILLIMETRES. FOR TOLERANCES OF UNTOLERANCED DIMENSIONS DURING MANUFACTURE REFER RELEVANT QCP / QP.

DRAWING NO. 3-V-0000-25362R

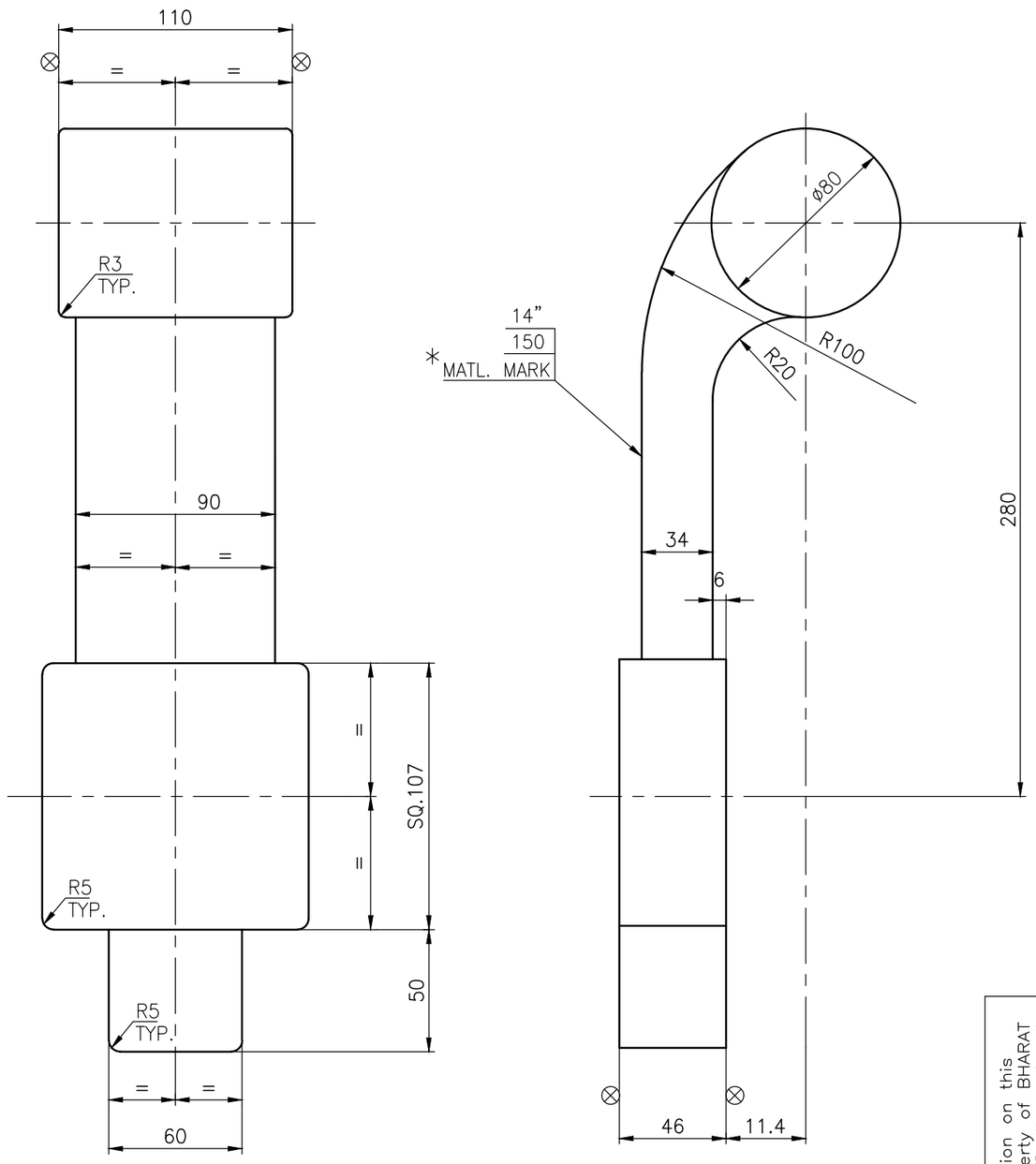


100

## NOTE

01. UNSPECIFIED FILLET RADII = R3
02. MACHINING ALLOWANCES HAVE BEEN ADDED ON ALL MACHINABLE SURFACES.
5. ⊗ SURFACE TO BE FURTHER MACHINED.
04. CASTING SHALL COMPLY WITH THE REQUIREMENTS OF APPLICABLE QUALITY PROCEDURE.

| SL. No. | DRAWING NO. | MATL. SPECN. | MATL. CODE | MATL. * MARK |
|---|---|---|---|---|
| 03 | 3-V-U555-25362R | A351 CF8, SH, CERTIFY | 92 203 398 0000 | CF8 |
| 02 | 3-V-Z083-25362R | A217 WC9, NT, CERTIFY | 92 203 270 0000 | WC9 |
| 01 | 3-V-Z082-25362R | A216 WCB, NR, CERTIFY | 92 203 269 0000 | WCB |

| SL No. | DESCRIPTION | MATL CODE | MATL SPECN | HEAT TREATMENT | SCRAP SORT | NET WT (kg) | GROSS WT (kg) | DRAWING No / COMPONENT CODE | ITEM No |
|---|---|---|---|---|---|---|---|---|---|
| | | | | | | | | | |

| REV | DATE | ALTERED | M.SELVAM |
|---|---|---|---|
| 01 | 23.07.15 | CHD & APPD | M.S & SSK |

SL. No. 03 INCLUDED

CAUTION: The information on this document is the property of BHARAT HEAVY ELECTRICALS LTD. It must not be used directly or indirectly in any way detrimental to the interest of the company.

TYPE OF PRODUCT OR NAME OF CUSTOMER/PROJECT: CS

BHARAT HEAVY ELECTRICALS LTD.
UNIT: HIGH PRESSURE BOILER PLANT.
TIRUCHIRAPALLI 620014.
365-121

| | NAME | SIGN | DATE | NO.OF VAR. |
|---|---|---|---|---|
| DRN | V.BAIRAVAN | | 29.03.14 | |
| CHD | S.SATHEESKUMAR | | 29.03.14 | |
| APPD | K.RAJASEKARAN | | 29.03.14 | |

| DEPT | CODE | SCALE | WEIGHT (KG). | REFERENCE INFORMATIONS | NO. OF ITEMS |
|---|---|---|---|---|---|
| VL | 320 | NTS | 8.47 | | |

| TITLE | CARD CODE | DRAWING NO. | REV |
|---|---|---|---|
| ARM (14"-150CL) | U 01 | 3-V-0000-25362R | 01 |

Size A3

ALL DIMENSIONS ARE IN MILLIMETRES. FOR TOLERANCES OF UNTOLERANCED DIMENSIONS DURING MANUFACTURE REFER RELEVANT QCP / QP.

DRAWING NO. 3-V-0000-25364R

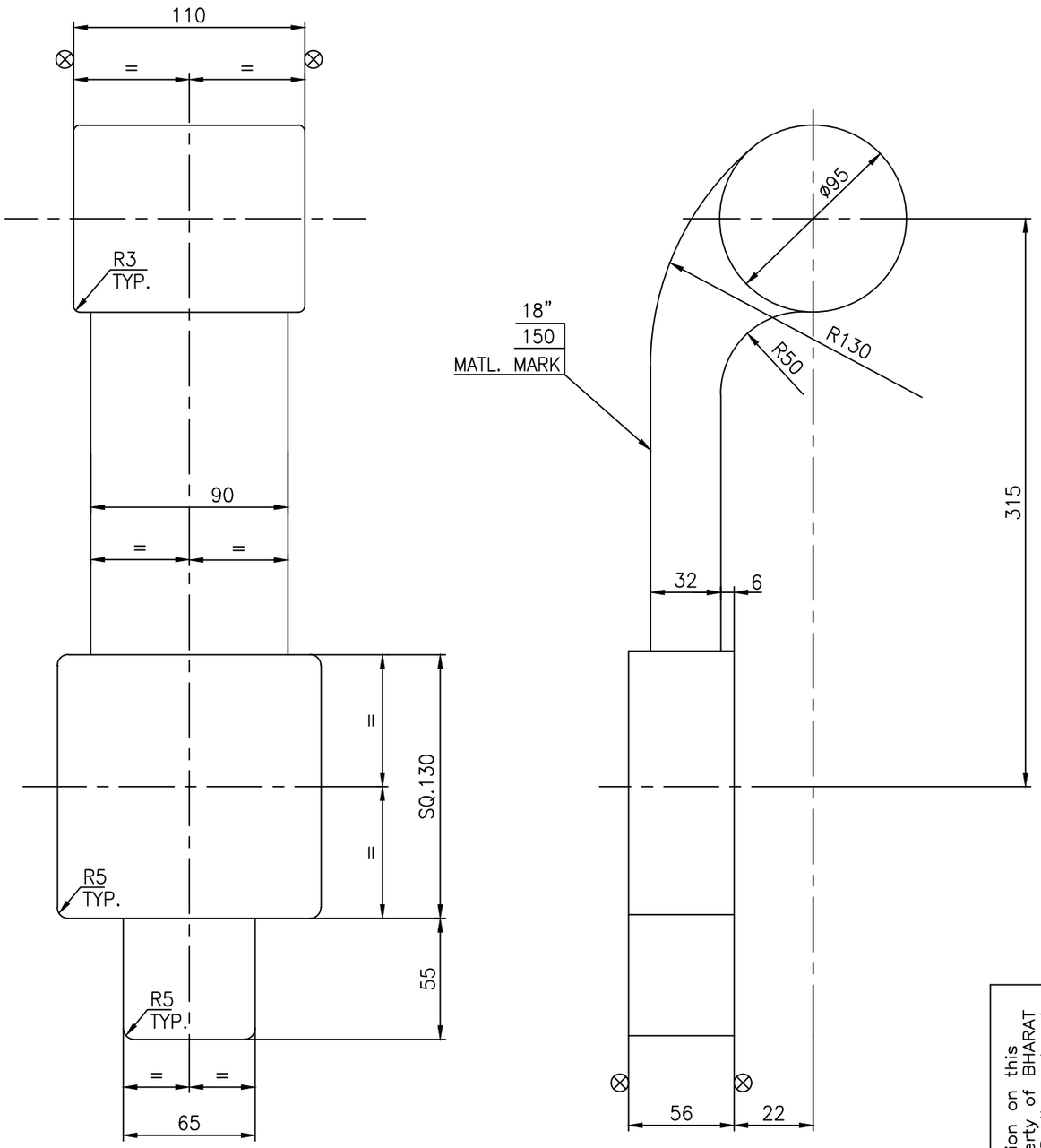


100

## NOTE

01. UNSPECIFIED FILLET RADII = R3
02. MACHINING ALLOWANCES HAVE BEEN ADDED ON ALL MACHINABLE SURFACES.
5. ⊗ SURFACE TO BE FURTHER MACHINED.
04. CASTING SHALL COMPLY WITH THE REQUIREMENTS OF APPLICABLE QUALITY PROCEDURE.

| SL. No. | DRAWING NO. | MATL. SPECN. | MATL. CODE | *MATL. MARK | |
|---|---|---|---|---|---|
| 03 | 3-V-Z119-25364R | A351 CF8, SH, CERTIFY | 922037250000 | CF8 | |
| 02 | 3-V-Z086-25364R | A217 WC9, NT, CERTIFY | 922032720000 | WC9 | |
| 01 | 3-V-Z085-25364R | A216 WCB, NR, CERTIFY | 922032710000 | WCB | |

| SL No. | DESCRIPTION | MATL CODE | MATL SPECN | HEAT TREATMENT | SCRAP SORT | NET WT (kg) | GROSS WT (kg) | DRAWING No / COMPONENT CODE | ITEM No |
|---|---|---|---|---|---|---|---|---|---|
| | | | | | | | | | |

| REV | DATE | ALTERED R.P.SINGH |
|---|---|---|
| 01 | 10.09.18 | CHD & APPD SSK & KRS |

SL.No. 03 INCLUDED.

CAUTION: The information on this document is the property of BHARAT HEAVY ELECTRICALS LTD. It must not be used directly or indirectly in any way detrimental to the interest of the company.

TYPE OF PRODUCT OR NAME OF CUSTOMER/PROJECT: CS

BHARAT HEAVY ELECTRICALS LTD.
UNIT: HIGH PRESSURE BOILER PLANT.
TIRUCHIRAPALLI 620014.
365-121

| | NAME | SIGN | DATE | NO.OF VAR. |
|---|---|---|---|---|
| DRN | V.BAIRAVAN | | 01.04.14 | |
| CHD | S.SATHEESKUMAR | | 01.04.14 | |
| APPD | K.RAJASEKARAN | | 01.04.14 | |

| DEPT | SCALE | WEIGHT (KG). | REFERENCE INFORMATIONS | NO. OF ITEMS |
|---|---|---|---|---|
| VL | NTS | 20.7 | | |
| CODE 320 | | | | |

| TITLE | CARD CODE | DRAWING NO. | REV |
|---|---|---|---|
| ARM CASTING (18"-150CL) | U 01 | 3-V-0000-25364R | 01 |

Size A3

TP-DG-4-V-0000-06966R
CORPORATE DRG ID

ALL DIMENSIONS ARE IN MILLIMETRES.
FOR TOLERANCES OF UNTOLERANCED DIMENSIONS DURING MANUFACTURE REFER RELEVANT QCP/QP

| REV | DATE | ALTERED K.P.LEON |
|---|---|---|
| 03 | 25.07.97 | CHD & APPD |

SL.No.11 INCLUDED

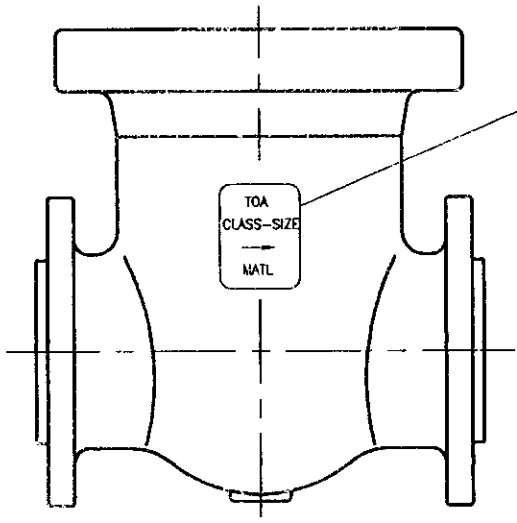


TOA
CLASS-SIZE
→
MATL

EMBOSSING DETAIL
(REFER TABLE)

## NOTES:

1. THE EMBOSSING DETAILS SHALL BE AS PER THE DRAWING.
2. FOR ALL OTHER DETAILS REFER THE BASIC DRG. No. LISTED IN THE TABULATION.

| SL. NO. | DRAWING NO. | MATL. CODE | BASIC DRAWING NO. | MATERIAL SPECIFICATION | CLASS | SIZE | MATL. |
|---|---|---|---|---|---|---|---|
| | | | | | * EMBOSSING DETAILS | | |
| 11 | 4-V-K872-06966R | 922009280000 | 2-V-N251-05865R | A216-WCB, NR ATTEST | 150 | 4 | WCB |
| 10 | 4-V-K824-06966R | 922008730000 | 1-V-B102-02628R/01 | A216-WCB, NR ATTEST | 300 | 3 | WCB |
| 09 | 4-V-K750-06966R/01 | 922008190000 | 1-V-B102-02628R/01 | A216-WCB, NR ATTEST | 600 | 3 | WCB |
| 08 | 4-V-K749-06966R/01 | 922008180000 | 2-V-N239-05862R | A216-WCB, NR ATTEST | 300 | 12 | WCB |
| 07 | 4-V-K732-06966R/01 | 922008170000 | 2-V-N235-05859R | A216-WCB, NR ATTEST | 300 | 10 | WCB |
| 06 | 4-V-K731-06966R/01 | 922008160000 | 2-V-N244-05864R | A216-WCB, NR ATTEST | 300 | 8 | WCB |
| 05 | 4-V-K730-06966R/01 | 922008150000 | 2-V-N248-05837R | A216-WCB, NR ATTEST | 300 | 6 | WCB |
| 04 | 4-V-K729-06966R/01 | 922008140000 | 2-V-M473-06208R | A216-WCB, NR ATTEST | 300 | 5 | WCB |
| 03 | 4-V-K728-06966R/01 | 922008130000 | 2-V-N251-05865R | A216-WCB, NR ATTEST | 300 | 4 | WCB |
| 02 | 4-V-K727-06966R/01 | 922008120000 | 2-V-N255-05867R | A216-WCB, NR ATTEST | 300 | 3 | WCB |
| 01 | 4-V-K726-06966R/01 | 922008110000 | 2-V-M472-06207R | A216-WCB, NR ATTEST | 300 | 2-1/2 | WCB |

DRAWING RETRACED WITH REV.02 ON 25.07.97 (REFER DCN.CS:0686)

| NO OFF | DESCRIPTION | MATL CODE | MATL SPECN | HEAT TREATMENT | SCRAP SORT | NET WT (kg) | GROSS WT (kg) | DRAWING No | ITEM No |
|---|---|---|---|---|---|---|---|---|---|

BHARAT HEAVY ELECTRICALS LTD.,
UNIT: HIGH PRESSURE BOILER PLANT.
TIRUCHIRAPALLI 620014.
365-122

| | NAME | SIGN | DATE | NO.OF VAR |
|---|---|---|---|---|
| DRN | K.P.LEON | | 25.07.97 | |
| CHD | N.DHANAPAL | | 25.07.97 | |
| APPD | A.VISWANATHAN | | 25.07.97 | |

| DEPT | SCALE | WEIGHT (KG). | REFERENCE INFORMATIONS | NO. OF ITEMS |
|---|---|---|---|---|
| VL | N T S | | CAD DRG: C406966R | |
| CODE 320 | | | | |

| TITLE | CARD CODE | DRAWING NO. | REV |
|---|---|---|---|
| BODY (BUTT WELDED) | U 01 | 4-V-0000-06966R | 03 |

CAUTION: The information on this document is the property of BHARAT HEAVY ELECTRICALS LTD. It must not be used directly or indirectly in any way detrimental to the interest of the company.

TP-DG-4-V-0000-06966R
CORPORATE DRG ID

**Revisions record:**

Rev. 21 – 1) Cl 8 – requirements of test bar added. 2) Cl 7 Table 1 – SV, SRV and QC NRV RT quantum for body casting modified. 3) Isolating valve, product name modified. 4) Cl 8 a) clarity on need for re qualification of castings added. 5) Cl 12 modified to include drawing details, 6) Cl 13.4 A – clarity to submit IBR certificate and MTC added.

Rev. 22- Dt: 26/06/2014 1) Cl 7.0 Table 1 –RT area of QCNRV body revised. 2) Cl.8.0 a) Modified. 3) Sketch of Zones of RT – RT zones of SV and SRV base castings modified based on Engineering review.

Rev. 23 Dt: 06/10/2015: Cl. 2, 4, 5, 6, 7, 8, 13, 15 modified to incorporate API 6D 24th Edition requirements.

Rev 24 Dt: 23/12/2015: Cl 1, 2, 3,5, 6, 7, 8, 9, 10, 13, 14 & 15 modified.

Rev: 25 Dt: 11/02/2017: Cl 1 changed to indicate the use of latest revisions of referred codes, standards, specifications, drawings, procedures, etc; Requirements of API 6D removed from Cl 2, 4, 5, 7, 13 & 15 since the API 6D certificate license was not applied for; Definitions for relevant, linear and rounded indications provided in Cl 7; Cl 2 to 10, 12, 13 & 15 revised to bring better clarity; Type 3.2 certification updated as per BS EN 10204-2004 in Cl 13.2.

*Rev: 26 : Dt – 21/02/2018 - SA/ASTM A 995 Gr 4A (CD3MN) added in Cl 1 & 5 based on Engineering/Valves input; Creep testing requirements removed and referred to SIP:RM:01.*

## 1. MATERIAL SPECIFICATIONS:

**All the codes, standards, specifications, drawings & procedures, etc., referred in this TDC shall be of latest revision as on the date of Enquiry/Purchase Order, whichever is earlier, unless specified otherwise.**

| | | |
|---|---|---|
| Carbon Steel (CS) | : | SA / ASTM A216 WCB, WCC & 352 LCB, LCC |
| Alloy Steel (AS) | : | SA / ASTM A217 WC6, WC9, C12A. |
| Stainless Steel (SS) | : | SA / ASTM A351 CF3M, CF8, CF8C & CF8M;<br>***SA / ASTM 995 Gr. 4A(CD3MN)*** |
| Additional Requirement | : | As listed below (Supplementary to above material specifications) |
| Size, Quantity, Grade/Class | : | As per Purchase Order & Drawing / Pattern. |

## 2. CHEMICAL COMPOSITION AND PROCESS:

a) Melting: As per the Specification, Fully Killed.
Carbon= 0.25% maximum: for SA / ASTM A216 WCB only.
Carbon= 0.15% maximum: for SA / ASTM A217 WC6 & WC9 (For the castings used in QCNRV, CRHNRV, TOA Valves & Conventional valves having contours for welding).

Product Analysis on test bar for each melt including residual elements shall be carried out.

b) All raw materials used in steel making including incoming scrap shall be checked by supplier to ensure freedom from radioactivity. (Applicable for SS material only)

c) Tolerance for chemistry shall be as per the above applicable material specifications/standards specified in Cl 1.

## 3. DIMENSIONS AND TOLERANCES:

**Dimensions & their** tolerances shall be as per applicable drawings. For untoleranced dimensions: VL: STDC: 023.

## 4. HEAT TREATMENT (HT):

CS – Castings of High Pressure Valve. (Cl.1500 & above), QCNRV & CRHNRV: Shall be in Annealed Condition.
AS – Castings: Normalized and Tempered.
Normalizing Temperature: SA/ASTM A217 WC6, WC9: 920-950°C and for C12A: 1050-1080°C.
Tempering Temperature: SA/ASTM A217 WC6: 680°C min.; WC9: 720°C min.; C12A: 750-780°C.
All other materials: Heat treatment shall be as per the applicable material specification & grade.

## 5. MECHANICAL TESTS:

a) Test bars to be cast integral with the casting or separately. If cast separately, they shall be cast at the same time as the castings and from the same ladle. A metal strip with heat number stamped shall be fused with the test bar during casting, to maintain traceability.

If one (1) casting is made from more than one heat, separate test bars for each cast to be poured and all test bars shall satisfy the requirements. Tests mentioned in Table 1 shall be conducted per heat / Heat treatment batch, as per ASTM A370.

Perform tensile tests at room temperature in accordance with the procedures specified in ASTM A370. Perform a minimum of one tensile test. All yield strengths shall be determined using 0.2 % offset method of ASTM A370. The results of the tensile test(s) shall satisfy the applicable material specification requirements. Hardness testing shall be as per ASTM E10 or E18.

If the results of the tensile test(s) do not satisfy the applicable requirements, two additional tests on two additional test specimens (removed from the same TC with no additional heat treatment) may be performed in an effort to qualify the material. The results of each of these tests shall satisfy the applicable requirements.

Table 1.

| No | TEST | MATERIAL SPECIFICATIONS | | | |
|---|---|---|---|---|---|
| | | **SA/ASTM A216, 217** | **SA/ASTM A352** | **SA/ASTM A351** | ***SA/ASTM A995*** |
| 1 | Tension Test | As per the Material Specification | | | |
| 2 | Hardness Test | As per the Specification | 225 HBW max. | Not applicable | ***Not Applicable*** |
| 3 | Bend Test Specimen 1" x ¾ " | WCB: Bend Angle $90^0$, Dia of Pin 2t<br>WCC: $90^0$, 2t<br>WC6: $120^0$, 3t<br>WC9: $90^0$, 3t<br>C12A: $90^0$, 2t | Not applicable | S3 of SA703 | ***Not applicable*** |
| 4 | Charpy- U Impact for all QCNRV, CRHNRV bodies for IBR. | As per IBR. At Room temperature. Acceptance: Avg /Single=36J/32J min. | Not applicable | Not applicable | ***Not applicable*** |
| 5 | Charpy- V Impact for CE Marking-Pressure Equipment Directive (PED) items as Specified in the Purchase Order. | At 20 Deg.C temperature. Acceptance:Avg/Single=40J/27J min. | As per Specification | Not applicable | ***Not applicable*** |
| 6 | Charpy- V Impact for LPBP bodies | At 20 Deg.C temperature. Acceptance: Avg/Single=27J/21J min. | Not applicable | Not applicable | ***Not applicable*** |

b) ***Creep testing & reporting shall be carried out as per SIP:RM:01 (latest revision) whenever indicated in the Enquiry/Purchase Order/Engineering Drawing.***

## 6. FETTLING, DRESSING & CLEANING:

- Dressing of castings-Free from risers, in gates, notches, undercuts, deep marks etc.
- Fused wires, parting line fins, chills etc. shall be removed by grinding.
- Gas cutting if employed shall be done before Heat treatment.
- Preheat the material to $200^0$C before gas cutting the Alloy steels.
- Castings shall be blast cleaned both inside and outside for the removal of fused sand, scales etc.
- Visual inspection: 100% as per MSS-SP:55. Acceptance: Type 1: none accepted; Type 2-12: A & B only accepted.

## 7. NON DESTRUCTIVE TESTING (NDT) AFTER HEAT TREATMENT

The NDE requirements for the castings shall meet the following as shown in Table-2 below. Castings shall be free from surface and internal defects like porosity, shrinkage, sand inclusion, crack, cold shut and other harmful defects. All castings shall be of Radiographic Quality.

1. Radiographic Testing Procedure (RT) : As per ASME B 16.34
2. Magnetic Particle Inspection (MPI) : As per ASTM E709
3. Liquid Penetrant Inspection (LPI) : As per ASTM E165

Table: 2

| Product | Components | Characteristics | Type of NDE Check | | | | |
|---|---|---|---|---|---|---|---|
| | | | **RT** | **RT Area** | **RT Acc. Std** | **MT $** | **MT Area** |
| Conventional Valves (Gate, Globe & Check) | Body, Bonnet Pr.part yoke, Cover | < 600 Class | 10%# | ASME B 16.34 / On critical area as indicated in the Drawing. | As per Table: 3 | -- | -- |
| | Body, Bonnet, Cover | 600 Class & above | 100% | | | -- | |
| | Body, Bonnet, Cover | 1500 Class & above | 100% | | | 100% | All accessible surfaces |
| | Wedge | All Special Class Valves | -- | -- | -- | 100% | |

| | | | | | | | |
|---|---|---|---|---|---|---|---|
| | | | | | | | including belly. |
| Safety Valve | Base | Flanged ends of All Castings | 100% | Critical Zones as given in the Drawing/ area shown in the sketch **below**. The areas where RT cannot be carried out MPI shall be done. | Class 2 of ASTM E446 / E186. For Butt weld ends as per Table- 3 | 100% | All accessible surfaces |
| | | Weld ends of All Castings | 100% | | | -- | -- |
| Safety Relief Valve | Base | All | 100% | | | -- | -- |
| | Bonnet | | 10%# | | | | |
| | SRV Nozzle | All | 100% | All area | Class-2 of ASTM E446 / E186. | -- | -- |
| QC NRV, CRH NRV | Body | 150 & 300 Class | 100% | Butt Weld Ends | As per Table: 3 | 100% | All accessible surfaces including belly. |
| | | 600 Class & above | 100% | Critical Zones as given in the Drawing/ area shown in the sketch below. The areas where RT cannot be carried out MPI shall be done. | As per Table: 3 | 100% | |
| | Body (Special) | All | | | | | |
| Soot Blower Valve | Body | All | 10%# | Critical Zones as given in the Drawing/ area shown in the sketch below. The areas where RT cannot be carried out MPI shall be done. | As per Table: 3 | -- | -- |
| Isolating Valve/ device | Body | < 600 Class | 100% | Critical Zones as given in the Drawing/ area shown in the sketch below. The areas where RT cannot be carried out MPI shall be done. | As per Table: 3 | -- | All accessible surfaces including belly. |
| | | 600 Class & above | | | | -- | |
| | | 1500 Class & above | | | | 100% | |
| LP Bypass Valve | Body | All | 100% | Critical Zones as given in the Drawing/ area shown in the sketch below. The areas where RT cannot be carried out MPI shall be done. | As per Table: 3 | -- | -- |

$ LPI can be substituted for MPI in all inaccessible area and for stainless steel castings # Refer Cl 7.1

Table: 3

| **Type Of Discontinuity** | **Acceptance Level Category** | **< 600 CLASS** | | **≥ 600 CLASS** | |
|---|---|---|---|---|---|
| | | **Thickness ≤2"** | **Thickness >2"** | **Thickness ≤2"** | **Thickness >2"** |
| Gas Porosity | A | A2 | A3 | A1 | A2 |
| Sand/Slag inclusion | B | B3 | B3 | B2 | B2 |
| Shrink Type-1 | C | CA2 | CA3 | CA1 | CA2 |
| Shrink Type-2 | C | CB3 | CB3 | CB2 | CB2 |
| Shrink Type-3 | C | CC3 | CC3 | CC2 | CC2 |
| Crack | D | NONE | NONE | NONE | NONE |
| Hot Tear | E | NONE | NONE | NONE | NONE |
| Un-fused Inserts (Chills/Chaplets) | F | NONE | NONE | NONE | NONE |

a. Butt welding ends shall be free of shrinkage, crack & hot tear.
b. For butt weld ends Gas hole/Porosity and sand inclusions to be within level A1 &B1 respectively

**NDE for SS material:** Castings shall be checked for radioactive contamination and reported. Survey meter shall be used to measure near the surface. Acceptance limits: Shall be less than 0.1 milli Rontgen (MR) per hour or 1 micro Sievert per hour.

7.1 # 10% Sampling shall be done as follows: (Wherever specified): The vendor shall select 10% of the Casting from the lot consisting of same size and type, (along with melt number / Sl.nos of the castings covered in the lot) for Radiography. A lot to be specified as the total number of castings as above, supplied in 4 months period (Jan-Apr, May-Aug, Sep-Dec). The vendor shall radiograph these specified castings and incorporate the lot size and meltno and Sl.no in the RT reports along with the other Sl.nos of the other castings covered in the lot.If the identified casting is defective then 2 more castings shall be radiographed.If these 2 castings are defect free then the lot is acceptable.If any one of these castings is defective then all the remaining castings shall be radiographed and all defective areas shall be repaired. BHEL will carry out audit on the lots at th vendor works at any time.

**7.2 Surface NDE (MPI & LPI): Testing as per** ASME B16.34.

1. **Relevant indication: Surface-rupture NDE indication with major dimensions > 1.6 mm (1/16 in).**
2. **Linear indication: Surface NDE indication whose length is ≥ three times its width.**
3. **Rounded indication: Surface NDE indication whose length is < three times its width.**
   **Acceptance for MPI & LPI:**
4. Cracks are not permitted.
5. For linear indications other than cracks, indications must be separated by a distance greater than the length of an acceptable indication. Maximum allowable length of the indication shall be:
   a) For thickness(t) up to 13mm= 8mm,
   b) For thickness from 13 to 25mm = 13mm
   c) For thickness above 25mm=18mm.
6. For rounded indications, 4 or more indications in a line separated by 1.5 mm or less edge to edge are unacceptable. Maximum allowable diameter of the indication shall be:
   a) For thickness up to 13mm =8mm
   b) For thickness above 13mm =13mm

## 8. DEVELOPMENT STAGE OF CASTING:

a) During developmental stage, of new castings or change to an existing casting on account of change in dimension which warrants pattern correction, Foundry to ensure, first sample pieces meet dimensional, NDE & Quality requiremnets in this TDC, before starting bulk production. Sample castings, 3 castings with nominal bore (NB) ≤ 100mm. & 1 casting with NB > 100 mm for each type shall be inspected for dimension and RT requirements at BHEL/Vendor works by BHEL personnel. One Test bar for each melt/heat treatment batch shall be supplied along with casting for test at BHEL. RT shall be carried out on entire area of the casting to the acceptance requirement of Table-2 & 3. In addition 100% MPI on all critical areas like change of sections, riser & in gate portions shall be carried out. Casting to be inspected for dimensions after proof machining wherever necessary. If machining operation is invloved the same shall be done and defect free condition shall be ensured. If any defect noticed in RT and machining, the type of defect shall be analyzed and accordingly size of gate, runner, riser and pouring methodolgy to be modified to get defect free casting. Sampling shall be continued till achieving sound casting. After satisfactory development of sampling bulk production shall be started. However weld repaired areas identified in visual examination for doubtful indications to be probed by MPI. Accepted sample castings may be considered for fixing the nominal weight of the castings.

b) During developmental stage RT on sample castings of Yoke, Yoke Clamp & Wedge/Disc shall meet Level-3 of ASTM E446/E186/E280.

c) Radiography not required after satisfactory development of casting & production based on established method for following parts: SRV Bonnet, Disc Holder,Upper and Lower adjusting rings, Packed cap, Cover Plate, Yoke and SRV guide flanges.

## 9. REPAIR:

Castings with unacceptable cracks, hot tears, shrinkage, etc. to be rectified by grinding & if required by welding. Welding to be done by qualified welder and qualified procedure as per ASME Section IX. For IBR items welders shall be qualified as per IBR.

Guidelines for repair of steel castings shall be as per SIP:VS:17 for activities like defects require/ not require weld repair, welding, Post Weld Heat Treatment, NDE and surface treatment. All repaired areas after PWHT shall be NDE tested and Hardness tested. Hardness shall meet material specification.

For PED (CE-Marking) castings, permanent joining (welding and weld repair) of components must be carried out by suitably qualified personnel according to suitable operating procedures. Also Non-Destructive tests of permanent joints must be carried out by suitable qualified personnel.

The procedures and personnel must be approved by a competent third party which at the manufacturer's discretion, may be - A notified body, - A third party organization recognized by a Member State of European Community.

**10. SURFACE TREATMENT:**

SS castings to be pickled & passivated (after repair & HT if any) as per ASTM A380. Satisfactory passivity of the surface to be checked using SS passivity test kit (Free iron test). After passivation, rinsing & test, the rinsed demineralised water to be checked for chloride with 1% Silver nitride, which shall not exceed 0.5 PPM.

**11. DIMENSIONAL CHECK:**

For all QCNRV & CRHNRV Body Castings: Thickness of the body shall be checked throughout the surface on a grid of 100mm x 100mm and recorded & submitted to BHEL.

**12. MARKING AND PACKING:**

Representation of Marking and identification shall be as per drawing. Also following details to be marked on each casting, on a raised pad using low stress stamps and Castings shall be suitably packed to avoid damage during transit.
1. Foundry code, 2. **Material** specification, grade & **Heat/**melt number, 3. Size and **4.** Class rating.

**13. INSPECTION AND CERTIFICATION:**

13.1 **For IBR items**:

Products shall be inspected at works and the applicable IBR Form must be countersigned by the Inspecting Authority as indicated below in case the shop**/mill/foundry** is not recognised as a "Well known Foundry" under IBR:

- ❒ **Imported Items:** Inspecting Authority approved by IBR for the Country of origin.
- ❒ **Indigenously Supplied items:** Director of Boilers/Chief Inspector of Boilers/Inspecting Authority approved by IBR, for the respective state.

Certification in IBR Form III-F for IBR items from "IBR-Well Known Foundry" or "Inspecting Authority", as applicable, to be submitted. IBR Form III-F & **separate** Test certificate in English language with following details, shall accompany the product:

1. Purchase Order No. (BHEL), TDC No & its revision no, Test certificate no & date.
2. **Material** Specification, Grade **& Class** with applicable year of code, Heat Number, Quantity & Size
3. Steel making process, Chemistry including incidental elements - Heat wise, Product analysis, Carbon Equivalent (CE).
4. Heat treatment details of the material and test bars.
5. Mechanical test results-Tensile (UTS, YTS **(0.2% offset)**, % elongation, % reduction in area), Impact & Hardness and NDE test results with reference & acceptance standard.
6. Repair details including HT, if any, Cleaning & Surface treatment details.
7. Any other information like clearance of sample casting.
8. Dimensional Inspection Report, where applicable.
9. **For SS:** Measured Radioactivity levels at 5cm from the surface of the castings shall be reported in the Test Certificate stating the measured value at the specified distance (not to be recorded in IBR Form).
10. **Creep test report as per the format suggested in Cl 5 of this TDC (applicable only for IBR application).**

13.2 For PED 2014/68/EU (CE-marking), test certificates of type 3.1 or 3.2, with details specified in Cl 13.1 for separate test certificate, shall be submitted as per BS EN 10204.

- ❒ Type 3.1 – Suppliers shall have ISO 9001-2008/2015 certification certified by Notified Body recognized by European community and test certificate certified by suppliers authorized inspection representative.
- ❒ Type 3.2 – Components inspected and test certificates certified by both the supplier's authorized inspection representative and Notified Body recognized by European community.

**14. AUDIT CHECKS AT BHEL:**

BHEL reserves the right to carry out audit checks for chemistry, HT condition, mechanical test and NDT on representative test bars or job. Items found defective during check or subsequent processing at BHEL will be rejected.

**15. END USE:**

For use in valves and other components like flanges, fittings etc. for high temperature & high pressure applications meeting IBR, ASME Section I, ASME B 16.34 and PED 2014/68/EU (CE-marking).

**Sketch of zones for RT**

**SV and SRV Base castings**

**Base** **Bonnet**

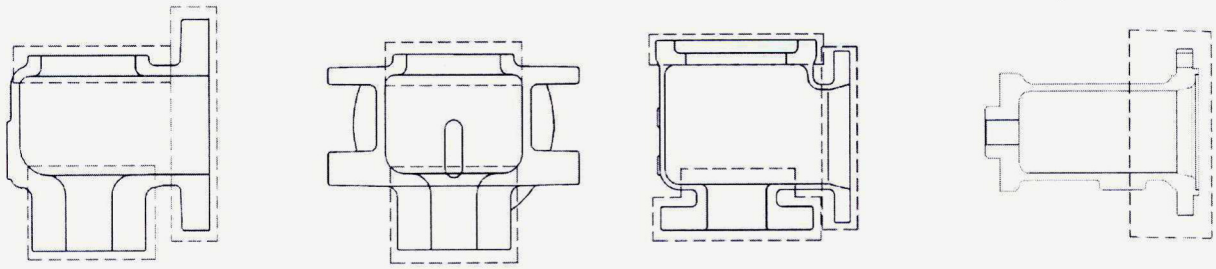

**Reheater Isolating Device Body**

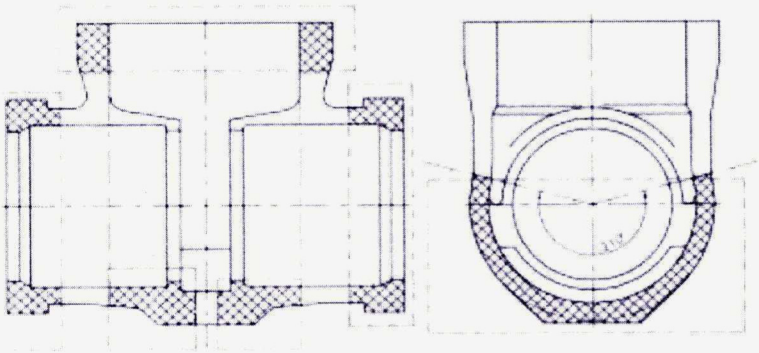

Radiography Area

**Soot Blower Valve Body**

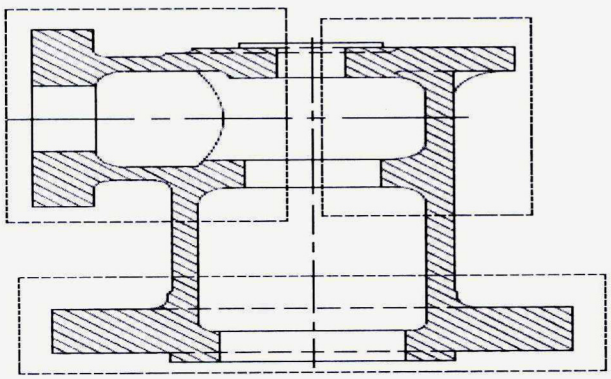

PART CODES : 920243870000, 920131810000, 920243870100, 920131810100

LRD IE, LRD IIE & WB IE – 2.5" 600#

— RADIOGRAPHY AREA

**Quick Closing Non Return Valve Body**

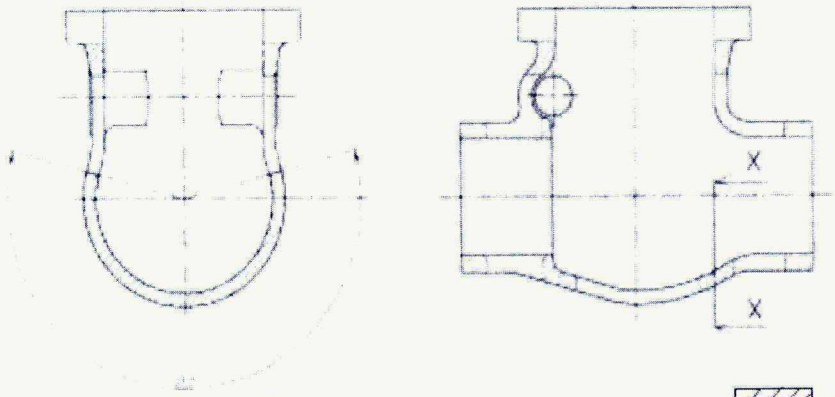


Section-XX

Radiography Area

**Cold Reheat Non Return Valve Body**

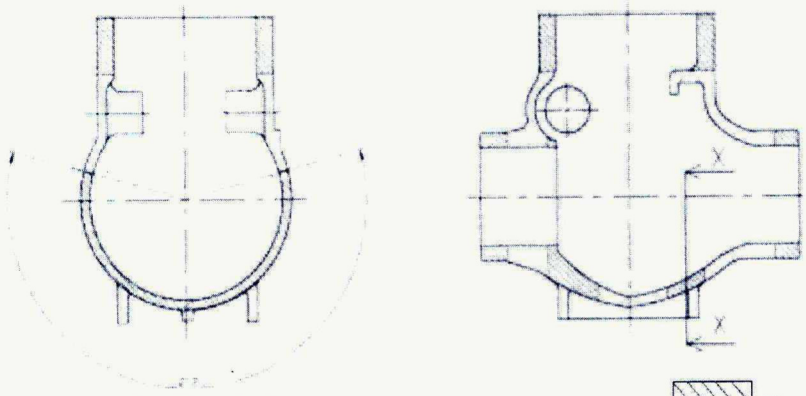


Section-XX

Radiography Area

**LP Bypass Stop cum Control Valve Body**

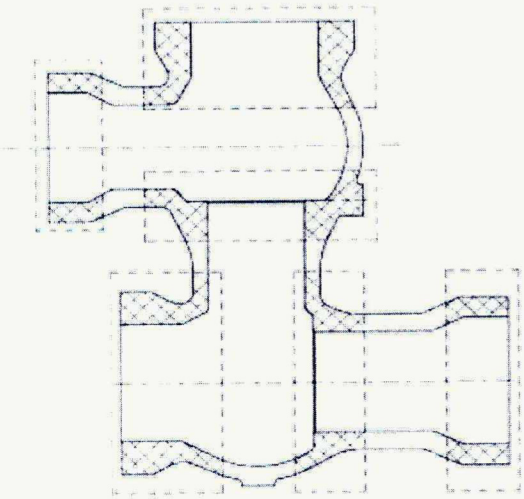

Radiography Area

**Revisions record:**
Rev 00 – Dt: 13/01/2018 – Fresh issue

## 1. MATERIAL SPECIFICATIONS:

| | | |
|---|---|---|
| Specification | : | ASME 2015 |
| Carbon Steel (CS) | : | SA / ASTM A216 WCB, WCC & 352 LCB, LCC |
| Alloy Steel (AS) | : | SA / ASTM A217 WC6, WC9, C12A. |
| Stainless Steel (SS) | : | SA / ASTM A351 CF3M, CF8, CF8C, CF8M & SA995 6A |
| Additional Requirement | : | As listed below (Supplementary to above material specifications) |
| Size, Quantity, Grade/Class | : | As per Purchase Order & Drawing / Pattern. |

## 2. CHEMICAL COMPOSITION AND PROCESS:

a) Melting: As per the Specification, Fully Killed.
Carbon= 0.25% maximum: for SA / ASTM A216 WCB only.
Carbon= 0.15% maximum: for SA / ASTM A217 WC6 & WC9 (For the castings used in QCNRV, CRHNRV, TOA Valves & Conventional valves having contours for welding).

Product Analysis on test bar for each melt including residual elements shall be carried out.

b) All raw materials used in steel making including incoming scrap shall be checked by supplier to ensure freedom from radioactivity. (Applicable for SS material only)

c) Tolerance for chemistry shall be as per the above applicable material specifications/standards specified in Cl 1.

## 3. DIMENSIONS AND TOLERANCES:

Dimensions & their tolerances shall be as per applicable drawings. For untoleranced dimensions: VL: STDC: 023(Latest).

## 4. HEAT TREATMENT (HT):

CS – Castings of High Pressure Valve. (Cl.1500 & above), QCNRV & CRHNRV: Shall be in Annealed Condition.
AS – Castings: Normalized and Tempered.
Normalizing Temperature: SA/ASTM A217 WC6, WC9: 920-950ºC and for C12A: 1050-1080ºC.
Tempering Temperature: SA/ASTM A217 WC6: 680ºC min.; WC9: 720ºC min.; C12A: 750-780ºC.
Others: Heat treatment as per the applicable material specification & grade.

## 5. MECHANICAL TESTS:

Test bars to be cast integral with the casting or separately. If cast separately, they shall be cast at the same time as the castings and from the same ladle. A metal strip with heat number stamped shall be fused with the test bar during casting, to maintain traceability.

If one (1) casting is made from more than one heat, separate test bars for each cast to be poured and all test bars shall satisfy the requirements. Tests mentioned in Table 1 shall be conducted per heat / Heat treatment batch, as per ASTM A370.

Perform tensile tests at room temperature in accordance with the procedures specified in ASTM A370. Perform a minimum of one tensile test. All yield strengths shall be determined using 0.2 % offset method of ASTM A370. The results of the tensile test(s) shall satisfy the applicable material specification requirements. Hardness testing shall be as per ASTM E10 or E18.

If the results of the tensile test(s) do not satisfy the applicable requirements, two additional tests on two additional test specimens (removed from the same TC with no additional heat treatment) may be performed in an effort to qualify the material. The results of each of these tests shall satisfy the applicable requirements.

**Table 1.**

| No | TEST | MATERIAL SPECIFICATION | | |
|---|---|---|---|---|
| | | SA/ASTM A216, 217 | SA/ASTM A352 | SA/ASTM A351 |
| 1 | Tension Test | As per the Specification | | |
| 2 | Hardness Test | As per the Specification | 225 HBW max. | Not applicable |
| 3 | Bend Test Specimen 1" x ¾ " | <table><tr><th></th><th>Angle of Bend</th><th>Dia of Pin</th></tr><tr><td>WCB</td><td>$90^0$</td><td>2t</td></tr><tr><td>WCC</td><td>$90^0$</td><td>2t</td></tr><tr><td>WC6</td><td>$120^0$</td><td>3t</td></tr><tr><td>WC9</td><td>$90^0$</td><td>3t</td></tr><tr><td>C12A</td><td>$90^0$</td><td>2t</td></tr></table> | Not applicable | S3 of SA703 |

| | | | | |
|---|---|---|---|---|
| 4 | Charpy- U Impact for all QCNRV, CRHNRV bodies. | At Room temperature.<br>Acceptance: Avg /Single=36J/32J min. | Not applicable | Not applicable |
| 5 | Charpy- V Impact for LPBP bodies | At 20 °C temperature.<br>Acceptance: Avg/Single=27J/21J min. | Not applicable | Not applicable |

**Creep testing shall be carried out as per CIP:938 (latest revision) for high chrome castings.**

## 6. FETTLING, DRESSING & CLEANING:

- Dressing of castings-Free from risers, in gates, notches, undercuts, deep marks etc.
- Fused wires, parting line fins, chills etc. shall be removed by grinding.
- Gas cutting if employed shall be done before Heat treatment.
- Preheat the material to $200^0$C. before gas cutting the Alloy steels.
- Castings shall be blast cleaned both inside and outside for the removal of fused sand, scales etc.
- Visual inspection: 100% as per MSS-SP: 55 (Latest). Acceptance: Type 1: none accepted; Type 2-12: A & B only accepted.

## 7. NON DESTRUCTIVE TESTING (NDT) AFTER HEAT TREATMENT

The NDE requirements for the castings shall meet the following as shown in Table-2 below. Castings shall be free from surface and internal defects like porosity, shrinkage, sand inclusion, crack, cold shut and other harmful defects. All castings shall be of Radiographic Quality.

1. Radiographic Testing Procedure (RT) : As per ASME B 16.34
2. Magnetic Particle Inspection (MPI) : As per ASTM E709
3. Liquid Penetrant Inspection (LPI) : As per ASTM E165

**Table: 2**

| Product | Components | Characteristics | Type of NDE Check | | | | |
|---|---|---|---|---|---|---|---|
| | | | RT | RT Area | RT Acc. Std | MT $ | MT Area |
| Conventional Valves (Gate, Globe & Check) | Body, Bonnet Pr.part yoke, Cover | < 600 Class | 10%# | ASME B 16.34 / On critical area as indicated in the Drawing. | As per Table: 3 | -- | -- |
| | Body, Bonnet, Cover | 600 Class & above | 100% | | | -- | |
| | Body, Bonnet, Cover | 1500 Class & above | 100% | | | 100% | All accessible surfaces including belly. |
| | Wedge | All Special Class Valves | -- | -- | -- | 100% | |
| Safety Valve | Base | Flanged ends of All Castings | 100% | Critical Zones as given in the Drawing/ area shown in the sketch below. The areas where RT cannot be carried out MPI shall be done. | Class 2 of ASTM E446 / E186. For Butt weld ends as per Table- 3 | 100% | All accessible surfaces |
| | | Weld ends of All Castings | 100% | | | -- | -- |
| Safety Relief Valve | Base | All | 100% | | | -- | -- |
| | Bonnet | | 10%# | | | | |
| | SRV Nozzle | All | 100% | All area | Class-2 of ASTM E446 / E186. | -- | -- |
| QC NRV, CRH NRV | Body | 150 & 300 Class | 100% | Butt Weld Ends | As per Table: 3 | 100% | All accessible surfaces including belly. |
| | | 600 Class & above | 100% | Critical Zones as given in the Drawing/ area shown in the sketch below. The areas where RT cannot be carried out MPI shall be done. | As per Table: 3 | 100% | |
| | Body (Special) | All | | | | | |
| Soot Blower Valve | Body | All | 10%# | Critical Zones as given in the Drawing/ area shown in the sketch below. The areas where RT cannot be carried out MPI shall be done. | As per Table: 3 | -- | -- |

| | | | | | | | |
|---|---|---|---|---|---|---|---|
| Isolating Valve/ device | Body | < 600 Class | 100% | Critical Zones as given in the Drawing/ area shown in the sketch below. The areas where RT cannot be carried out MPI shall be done. | As per Table: 3 | -- | All accessible surfaces including belly. |
| | | 600 Class & above | | | | -- | |
| | | 1500 Class & above | | | | 100% | |
| LP Bypass Valve | Body | All | 100% | Critical Zones as given in the Drawing/ area shown in the sketch below. The areas where RT cannot be carried out MPI shall be done. | As per Table: 3 | -- | -- |
| $ LPI can be substituted for MPI in all inaccessible area and for stainless steel castings # Refer Cl 7.1 | | | | | | | |

**Table: 3**

| **Type Of Discontinuity** | **Acceptance Level Category** | **< 600 CLASS** | | **≥ 600 CLASS** | |
|---|---|---|---|---|---|
| | | **Thickness ≤2"** | **Thickness >2"** | **Thickness ≤2"** | **Thickness >2"** |
| Gas Porosity | A | A2 | A3 | A1 | A2 |
| Sand/Slag inclusion | B | B3 | B3 | B2 | B2 |
| Shrink Type-1 | C | CA2 | CA3 | CA1 | CA2 |
| Shrink Type-2 | C | CB3 | CB3 | CB2 | CB2 |
| Shrink Type-3 | C | CC3 | CC3 | CC2 | CC2 |
| Crack | D | NONE | NONE | NONE | NONE |
| Hot Tear | E | NONE | NONE | NONE | NONE |
| Un-fused Inserts (Chills/Chaplets) | F | NONE | NONE | NONE | NONE |
| a. Butt welding ends shall be free of shrinkage, crack & hot tear.<br>b. For butt weld ends Gas hole/Porosity and sand inclusions to be within level A1 &B1 respectively | | | | | |

**NDE for SS material:** Castings shall be checked for radioactive contamination and reported. Survey meter shall be used to measure near the surface. Acceptance limits: Shall be less than 0.1 milli Rontgen (MR) per hour or 1 micro Sievert per hour.

7.1 # 10% Sampling shall be done as follows: (Wherever specified): The vendor shall select 10% of the Casting from the lot consisting of same size and type, (along with melt number / Sl.nos of the castings covered in the lot) for Radiography. A lot to be specified as the total number of castings as above, supplied in 4 months period (Jan-Apr, May-Aug, Sep-Dec). The vendor shall radiograph these specified castings and incorporate the lot size and melt no. and Sl.no in the RT reports along with the other Sl. No.s of the other castings covered in the lot. If the identified casting is defective then two more castings shall be radiographed.If these two castings are defect free then the lot is acceptable. If any one of these castings is defective then all the remaining castings shall be radiographed and all defective areas shall be repaired. BHEL will carry out audit on the lots at the vendor works at any time.

**7.2 Surface NDE (MPI & LPI):** Testing as per ASME B16.34.

1. **Relevant indication:** Surface-rupture NDE indication with major dimensions > 1.6 mm (1/16 in).
2. **Linear indication:** Surface NDE indication whose length is ≥ three times its width.
3. **Rounded indication:** Surface NDE indication whose length is < three times its width.

   **Acceptance for MPI & LPI:**
4. Cracks are not permitted.
5. For linear indications other than cracks, indications must be separated by a distance greater than the length of an acceptable indication. Maximum allowable length of the indication shall be:
   a) For thickness(t) up to 13mm= 8mm,
   b) For thickness from 13 to 25mm = 13mm
   c) For thickness above 25mm=18mm.
6. For rounded indications, 4 or more indications in a line separated by 1.5 mm or less edge to edge are unacceptable. Maximum allowable diameter of the indication shall be:
   a) For thickness up to 13mm =8mm
   b) For thickness above 13mm =13mm

**8. DEVELOPMENT STAGE OF CASTING:**

a) During developmental stage of new castings or change to an existing casting on account of change in dimension which warrants pattern correction, Foundry to ensure the first sample casting meets dimensional, NDE & Quality requirements in this TDC, before starting bulk production. Sample castings: Three castings with nominal bore (NB) ≤ 100 mm & One casting with NB > 100 mm for each type shall be inspected by BHEL personnel for dimension and RT requirements at Casting Vendor /BHEL works. One Test bar for each melt/heat treatment batch shall be supplied along with casting for test at BHEL. RT shall be carried out on entire area of the casting to the acceptance requirement of Table-2 & 3. In addition 100% MPI on all critical areas like change of sections, riser & in gate portions shall be carried out. Casting to be inspected for dimensions after proof machining wherever necessary. If machining operation is involved, the same shall be done and defect free condition shall be ensured. If any defect noticed in RT and machining, the type of defect shall be analyzed and accordingly size of gate, runner, riser and pouring methodology to be modified to get defect free casting. Sampling shall be continued till achieving sound casting. After satisfactory development of sampling, bulk production shall be started. However, weld repaired areas identified in visual examination for doubtful indications to be probed by MPI. Accepted sample castings may be considered for fixing the nominal weight of the castings.

b) During developmental stage, RT on sample castings of Yoke, Yoke Clamp & Wedge/Disc shall meet Level-3 of ASTM E446/E186/E280.

c) Radiography not required after satisfactory development of casting & production based on established method for following parts: SRV Bonnet, Disc Holder,Upper and Lower adjusting rings, Packed cap, Cover Plate, Yoke and SRV guide flanges.

**9. REPAIR:**

Castings with unacceptable cracks, hot tears, shrinkage, etc. to be rectified by grinding & if required by welding. Welding to be done by qualified welder and qualified procedure as per ASME Section IX.
Guidelines for repair of steel castings shall be as per SIP:VS:17(Latest) for activities like defects require/ not require weld repair, welding, Post Weld Heat Treatment, NDE and surface treatment. All repaired areas after PWHT shall be NDE tested and Hardness tested. Hardness shall meet the material specification requirements.

**10. SURFACE TREATMENT:**

SS castings to be pickled & passivated (after repair & HT if any) as per ASTM A380. Satisfactory passivity of the surface to be checked using SS passivity test kit (Free iron test). After passivation, rinsing & test, the rinsed demineralised water to be checked for chloride with 1% Silver nitride, which shall not exceed 0.5 PPM.

**11. DIMENSIONAL CHECK:**

For all QCNRV & CRHNRV Body Castings: Thickness of the body shall be checked throughout the surface on a grid of 100mm x 100mm and recorded & submitted to BHEL.

**12. MARKING AND PACKING:**

Representation of Marking and identification shall be as per drawing. Also following details to be marked on each casting, on a raised pad using low stress stamps and Castings shall be suitably packed to avoid damage during transit.
1. Foundry code, 2. Material specification, grade 3.Heat/melt number 4. Size and 5. Class rating.

**13. INSPECTION AND CERTIFICATION:**

13.1 Supplier shall have valid ISO:9001-2015 certificate for the duration of the contract. However, ISO:9001-2008 certification is acceptable till 14th September 2018.

13.2 Finished Castings shall be inspected at supplier works and certified as per BS EN 10204 Type 3.2 by any ASME Authorized Inspection Agency or their subsidiaries covering all details listed in Cl. 13.3.

13.3 Manufacturer's Test certificate (MTC) in English language, not limited to the following, shall accompany all products:

1. Purchase Order No. (BHEL), TDC No & its revision no, Test certificate no & date.
2. Material Specification, Grade & Class with applicable year of code, Heat Number, Quantity & Size
3. Steel making process, Chemistry including incidental elements - Heat wise, Product analysis, Carbon Equivalent (CE).
4. Heat treatment details of the material and test bars.
5. Mechanical test results-Tensile (UTS, YTS (0.2% offset), % elongation, % reduction in area), Impact & Hardness and NDE test results with reference & acceptance standard.
6. Repair details including HT, if any, Cleaning & Surface treatment details.
7. Any other information like clearance of sample casting.
8. Dimensional Inspection Report, where applicable.

9. For SS: Measured Radioactivity levels at 5cm from the surface of the castings shall be reported in the Test Certificate stating the measured value at the specified distance.
10. Creep test report as per CIP:938 (latest revision) for high chrome castings.
11. Valid ISO 9001 Certificate

**14. AUDIT CHECKS AT BHEL:**

BHEL reserves the right to carry out audit checks for chemistry, HT condition, mechanical test and NDT on representative test bars or job. Items found defective during check or subsequent processing at BHEL will be rejected.

**15. END USE:**

For use in valves and other components like flanges, fittings etc. for high temperature & high pressure applications meeting ASME Section I and ASME B 16.34 for Maitree Project (2x660 MW).

**Sketch of zones for RT**

**SV and SRV Base castings**

**Base** **Bonnet**

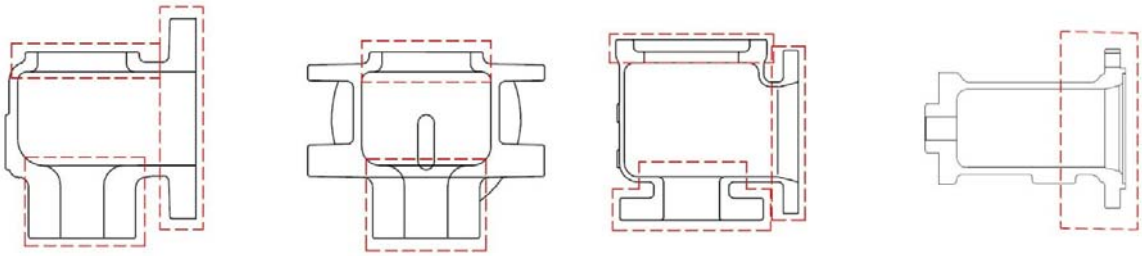

**Reheater Isolating Device Body**

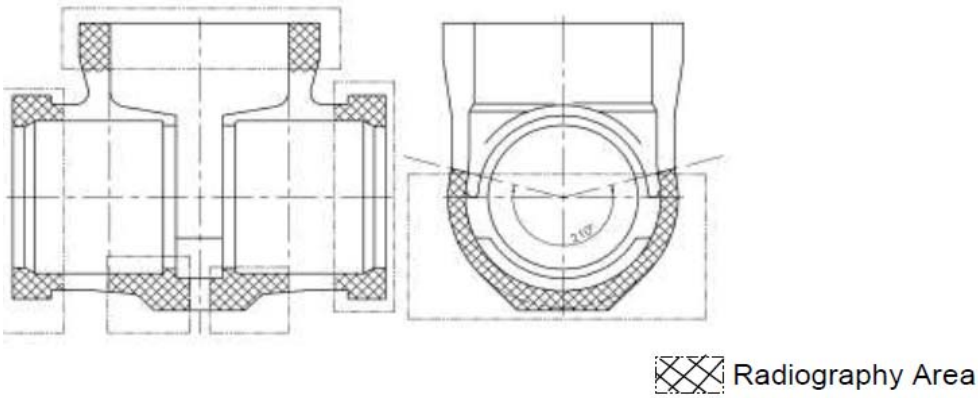

**Soot Blower Valve Body**

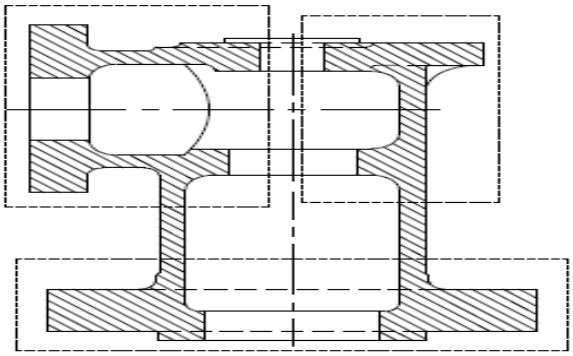

PART CODES : 920243870000, 920131810000, 920243870100, 920131810100

LRD IE, LRD IIE & WB IE – 2.5" 600#

— RADIOGRAPHY AREA

**Quick Closing Non Return Valve Body**

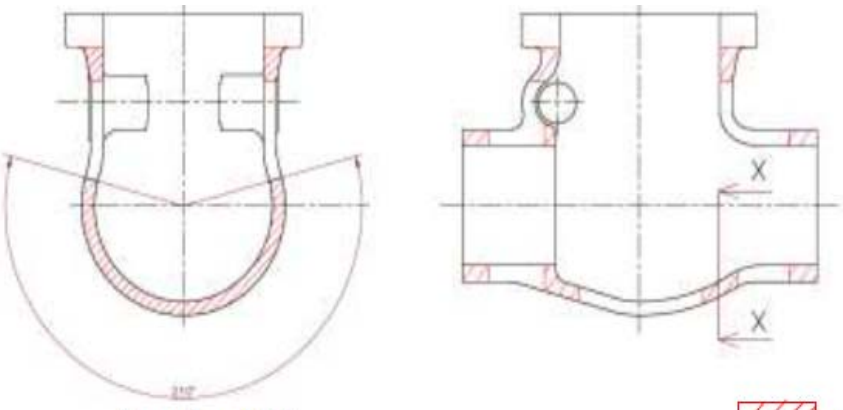


Section-XX

Radiography Area

**Cold Reheat Non Return Valve Body**

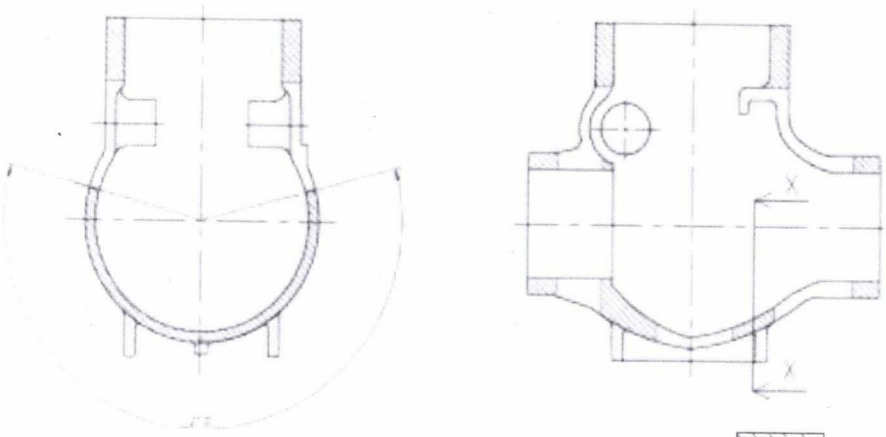


Section-XX

Radiography Area

**LP Bypass Stop cum Control Valve Body**

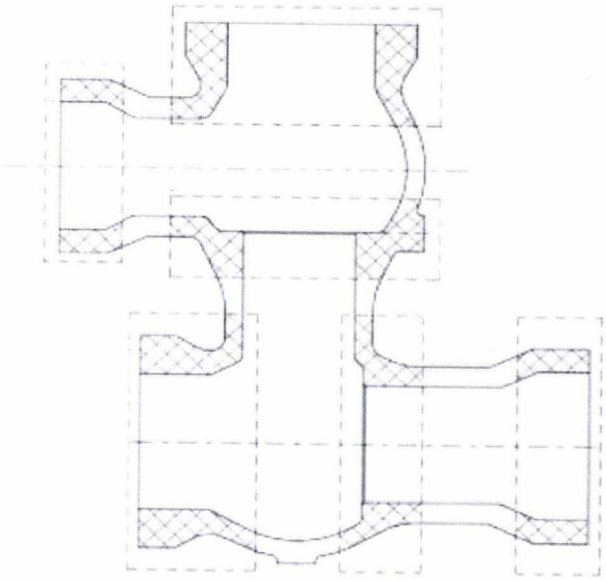

Radiography Area

| | | | | | | | |
|---|---|---|---|---|---|---|---|
| 13/01/2018 | 13/01/18 | 13/1/18 | | 13/1/18 | 13.1.18 | 13/01/18 | 13/01/18 |
| Venkanna Rupani | G. Panneer Selvam | J.V.V. Aruna Kumar | N. Kirubakaran | K. Rajasekaran | R. Rajappan | R. Ananthakrishnan | Amit Roy |
| Sr. Engr/ QA | DGM/QA | DGM/QA | SDGM/PE/ FB | SM/Valves/ Engg | SDGM/ MM | AGM/Valves/ Purchase | AGM/QA& BE |
| **Prepared By** | **Reviewed By** | | | | | | **Approved By** |

**Revisions record:**
Rev 00 – Dt: 13/01/2018 – Fresh issue
Rev 01 - Dt: 19/02/2019 – ***SA/ASTM A 995 Gr 4A (CD3MN) added in Cl 1 & 5 based on Engineering/Valves input***

## 1. MATERIAL SPECIFICATIONS:

| | | |
|---|---|---|
| Specification | : | ASME 2015 |
| Carbon Steel (CS) | : | SA / ASTM A216 WCB, WCC & 352 LCB, LCC |
| Alloy Steel (AS) | : | SA / ASTM A217 WC6, WC9, C12A. |
| Stainless Steel (SS) | : | SA / ASTM A351 CF3M, CF8, CF8C, CF8M, SA995 6A<br>***SA / ASTM 995 Gr. 4A(CD3MN)*** |
| Additional Requirement | : | As listed below (Supplementary to above material specifications) |
| Size, Quantity, Grade/Class | : | As per Purchase Order & Drawing / Pattern. |

## 2. CHEMICAL COMPOSITION AND PROCESS:

a) Melting: As per the Specification, Fully Killed.
Carbon= 0.25% maximum: for SA / ASTM A216 WCB only.
Carbon= 0.15% maximum: for SA / ASTM A217 WC6 & WC9 (For the castings used in QCNRV, CRHNRV, TOA Valves & Conventional valves having contours for welding).

Product Analysis on test bar for each melt including residual elements shall be carried out.

b) All raw materials used in steel making including incoming scrap shall be checked by supplier to ensure freedom from radioactivity. (Applicable for SS material only)

c) Tolerance for chemistry shall be as per the above applicable material specifications/standards specified in Cl 1.

## 3. DIMENSIONS AND TOLERANCES:

Dimensions & their tolerances shall be as per applicable drawings. For untoleranced dimensions: VL: STDC: 023(Latest).

## 4. HEAT TREATMENT (HT):

CS – Castings of High Pressure Valve. (Cl.1500 & above), QCNRV & CRHNRV: Shall be in Annealed Condition.
AS – Castings: Normalized and Tempered.
Normalizing Temperature: SA/ASTM A217 WC6, WC9: 920-950°C and for C12A: 1050-1080°C.
Tempering Temperature: SA/ASTM A217 WC6: 680°C min.; WC9: 720°C min.; C12A: 750-780°C.
Others: Heat treatment as per the applicable material specification & grade.

## 5. MECHANICAL TESTS:

Test bars to be cast integral with the casting or separately. If cast separately, they shall be cast at the same time as the castings and from the same ladle. A metal strip with heat number stamped shall be fused with the test bar during casting, to maintain traceability.

If one (1) casting is made from more than one heat, separate test bars for each cast to be poured and all test bars shall satisfy the requirements. Tests mentioned in Table 1 shall be conducted per heat / Heat treatment batch, as per ASTM A370.

Perform tensile tests at room temperature in accordance with the procedures specified in ASTM A370. Perform a minimum of one tensile test. All yield strengths shall be determined using 0.2 % offset method of ASTM A370. The results of the tensile test(s) shall satisfy the applicable material specification requirements. Hardness testing shall be as per ASTM E10 or E18.

If the results of the tensile test(s) do not satisfy the applicable requirements, two additional tests on two additional test specimens (removed from the same TC with no additional heat treatment) may be performed in an effort to qualify the material. The results of each of these tests shall satisfy the applicable requirements.

**Table 1.**

| Sl. No | TEST | MATERIAL SPECIFICATION | | | |
|---|---|---|---|---|---|
| | | **SA/ASTM A216, 217** | **SA/ASTM A352** | **SA/ASTM A351** | ***SA/ASTM A995*** |
| 1 | Tension Test | As per Material Specification | | | |
| 2 | Hardness Test | As per the Specification | 225 HBW max. | Not applicable | *Not applicable* |

| | | | | | |
|---|---|---|---|---|---|
| 3 | Bend Test Specimen 1" x ¾ " | <table><tr><th></th><th>Angle of Bend</th><th>Dia of Pin</th></tr><tr><td>WCB</td><td>$90^0$</td><td>2t</td></tr><tr><td>WCC</td><td>$90^0$</td><td>2t</td></tr><tr><td>WC6</td><td>$120^0$</td><td>3t</td></tr><tr><td>WC9</td><td>$90^0$</td><td>3t</td></tr><tr><td>C12A</td><td>$90^0$</td><td>2t</td></tr></table> | Not applicable | S3 of SA703 | *Not applicable* |
| 4 | Charpy- U Impact for all QCNRV, CRHNRV bodies. | At Room temperature.<br>Acceptance: Avg /Single=36J/32J min. | Not applicable | Not applicable | *Not applicable* |
| 5 | Charpy- V Impact for LPBP bodies | At 20 °C temperature.<br>Acceptance: Avg/Single=27J/21J min. | Not applicable | Not applicable | *Not applicable* |

**Creep testing and reporting shall be carried out as per CIP:938 (latest revision) for high chrome castings.**

## 6. FETTLING, DRESSING & CLEANING:

- Dressing of castings-Free from risers, in gates, notches, undercuts, deep marks etc.
- Fused wires, parting line fins, chills etc. shall be removed by grinding.
- Gas cutting if employed shall be done before Heat treatment.
- Preheat the material to $200^0$C. before gas cutting the Alloy steels.
- Castings shall be blast cleaned both inside and outside for the removal of fused sand, scales etc.
- Visual inspection: 100% as per MSS-SP: 55 (Latest). Acceptance: Type 1: none accepted; Type 2-12: A & B only accepted.

## 7. NON DESTRUCTIVE TESTING (NDT) AFTER HEAT TREATMENT

The NDE requirements for the castings shall meet the following as shown in Table-2 below. Castings shall be free from surface and internal defects like porosity, shrinkage, sand inclusion, crack, cold shut and other harmful defects. All castings shall be of Radiographic Quality.

1. Radiographic Testing Procedure (RT) : As per ASME B 16.34
2. Magnetic Particle Inspection (MPI) : As per ASTM E709
3. Liquid Penetrant Inspection (LPI) : As per ASTM E165

**Table: 2**

| Product | Components | Characteristics | Type of NDE Check | | | | |
|---|---|---|---|---|---|---|---|
| | | | RT | RT Area | RT Acc. Std | MT $ | MT Area |
| Conventional Valves (Gate, Globe & Check) | Body, Bonnet Pr.part yoke, Cover | < 600 Class | 10%# | ASME B 16.34 / On critical area as indicated in the Drawing. | As per Table: 3 | -- | -- |
| | Body, Bonnet, Cover | 600 Class & above | 100% | | | -- | |
| | Body, Bonnet, Cover | 1500 Class & above | 100% | | | 100% | All accessible surfaces including belly. |
| | Wedge | All Special Class Valves | -- | -- | -- | 100% | |
| Safety Valve | Base | Flanged ends of All Castings | 100% | Critical Zones as given in the Drawing/ area shown in the sketch below. The areas where RT cannot be carried out MPI shall be done. | Class 2 of ASTM E446 / E186. For Butt weld ends as per Table- 3 | 100% | All accessible surfaces |
| | | Weld ends of All Castings | 100% | | | -- | -- |
| Safety Relief Valve | Base | All | 100% | | | -- | -- |
| | Bonnet | | 10%# | | | | |
| | SRV Nozzle | All | 100% | All area | Class-2 of ASTM E446 / E186. | -- | -- |
| QC NRV, CRH NRV | Body | 150 & 300 Class | 100% | Butt Weld Ends | As per Table: 3 | 100% | All accessible surfaces |

| | | | | | | | |
|---|---|---|---|---|---|---|---|
| | | 600 Class & above | 100% | Critical Zones as given in the Drawing/ area shown in the sketch below. The areas where RT cannot be carried out MPI shall be done. | As per Table: 3 | 100% | including belly. |
| | Body (Special) | All | | | | | |
| Soot Blower Valve | Body | All | 10%# | Critical Zones as given in the Drawing/ area shown in the sketch below. The areas where RT cannot be carried out MPI shall be done. | As per Table: 3 | -- | -- |
| Isolating Valve/ device | Body | < 600 Class | 100% | Critical Zones as given in the Drawing/ area shown in the sketch below. The areas where RT cannot be carried out MPI shall be done. | As per Table: 3 | -- | All accessible surfaces including belly. |
| | | 600 Class & above | | | | -- | |
| | | 1500 Class & above | | | | 100% | |
| LP Bypass Valve | Body | All | 100% | Critical Zones as given in the Drawing/ area shown in the sketch below. The areas where RT cannot be carried out MPI shall be done. | As per Table: 3 | -- | -- |

$ LPI can be substituted for MPI in all inaccessible area and for stainless steel castings # Refer Cl 7.1

**Table: 3**

| Type Of Discontinuity | Acceptance Level Category | < 600 CLASS | | ≥ 600 CLASS | |
|---|---|---|---|---|---|
| | | Thickness ≤2" | Thickness >2" | Thickness ≤2" | Thickness >2" |
| Gas Porosity | A | A2 | A3 | A1 | A2 |
| Sand/Slag inclusion | B | B3 | B3 | B2 | B2 |
| Shrink Type-1 | C | CA2 | CA3 | CA1 | CA2 |
| Shrink Type-2 | C | CB3 | CB3 | CB2 | CB2 |
| Shrink Type-3 | C | CC3 | CC3 | CC2 | CC2 |
| Crack | D | NONE | NONE | NONE | NONE |
| Hot Tear | E | NONE | NONE | NONE | NONE |
| Un-fused Inserts (Chills/Chaplets) | F | NONE | NONE | NONE | NONE |

a. Butt welding ends shall be free of shrinkage, crack & hot tear.
b. For butt weld ends Gas hole/Porosity and sand inclusions to be within level A1 &B1 respectively

**NDE for SS material:** Castings shall be checked for radioactive contamination and reported. Survey meter shall be used to measure near the surface. Acceptance limits: Shall be less than 0.1 milli Rontgen (MR) per hour or 1 micro Sievert per hour.

7.1 # 10% Sampling shall be done as follows: (Wherever specified): The vendor shall select 10% of the Casting from the lot consisting of same size and type, (along with melt number / Sl.nos of the castings covered in the lot) for Radiography. A lot to be specified as the total number of castings as above, supplied in 4 months period (Jan-Apr, May-Aug, Sep-Dec). The vendor shall radiograph these specified castings and incorporate the lot size and melt no. and Sl.no in the RT reports along with the other Sl. No.s of the other castings covered in the lot. If the identified casting is defective then two more castings shall be radiographed.If these two castings are defect free then the lot is acceptable. If any one of these castings is defective then all the remaining castings shall be radiographed and all defective areas shall be repaired. BHEL will carry out audit on the lots at the vendor works at any time.

**7.2 Surface NDE (MPI & LPI):** Testing as per ASME B16.34.

1. **Relevant indication:** Surface-rupture NDE indication with major dimensions > 1.6 mm (1/16 in).
2. **Linear indication:** Surface NDE indication whose length is ≥ three times its width.

3. **Rounded indication:** Surface NDE indication whose length is < three times its width.

**Acceptance for MPI & LPI:**

4. Cracks are not permitted.
5. For linear indications other than cracks, indications must be separated by a distance greater than the length of an acceptable indication. Maximum allowable length of the indication shall be:
   a) For thickness(t) up to 13mm= 8mm,
   b) For thickness from 13 to 25mm = 13mm
   c) For thickness above 25mm=18mm.
6. For rounded indications, 4 or more indications in a line separated by 1.5 mm or less edge to edge are unacceptable. Maximum allowable diameter of the indication shall be:
   a) For thickness up to 13mm =8mm
   b) For thickness above 13mm =13mm

## 8. DEVELOPMENT STAGE OF CASTING:

a) During developmental stage of new castings or change to an existing casting on account of change in dimension which warrants pattern correction, Foundry to ensure the first sample casting meets dimensional, NDE & Quality requirements in this TDC, before starting bulk production. Sample castings: Three castings with nominal bore (NB) ≤ 100 mm & One casting with NB > 100 mm for each type shall be inspected by BHEL personnel for dimension and RT requirements at Casting Vendor /BHEL works. One Test bar for each melt/heat treatment batch shall be supplied along with casting for test at BHEL. RT shall be carried out on entire area of the casting to the acceptance requirement of Table-2 & 3. In addition 100% MPI on all critical areas like change of sections, riser & in gate portions shall be carried out. Casting to be inspected for dimensions after proof machining wherever necessary. If machining operation is involved, the same shall be done and defect free condition shall be ensured. If any defect noticed in RT and machining, the type of defect shall be analyzed and accordingly size of gate, runner, riser and pouring methodology to be modified to get defect free casting. Sampling shall be continued till achieving sound casting. After satisfactory development of sampling, bulk production shall be started. However, weld repaired areas identified in visual examination for doubtful indications to be probed by MPI. Accepted sample castings may be considered for fixing the nominal weight of the castings.

b) During developmental stage, RT on sample castings of Yoke, Yoke Clamp & Wedge/Disc shall meet Level-3 of ASTM E446/E186/E280.

c) Radiography not required after satisfactory development of casting & production based on established method for following parts: SRV Bonnet, Disc Holder,Upper and Lower adjusting rings, Packed cap, Cover Plate, Yoke and SRV guide flanges.

## 9. REPAIR:

Castings with unacceptable cracks, hot tears, shrinkage, etc. to be rectified by grinding & if required by welding. Welding to be done by qualified welder and qualified procedure as per ASME Section IX.

Guidelines for repair of steel castings shall be as per SIP:VS:17(Latest) for activities like defects require/ not require weld repair, welding, Post Weld Heat Treatment, NDE and surface treatment. All repaired areas after PWHT shall be NDE tested and Hardness tested. Hardness shall meet the material specification requirements.

## 10. SURFACE TREATMENT:

SS castings to be pickled & passivated (after repair & HT if any) as per ASTM A380. Satisfactory passivity of the surface to be checked using SS passivity test kit (Free iron test). After passivation, rinsing & test, the rinsed demineralised water to be checked for chloride with 1% Silver nitride, which shall not exceed 0.5 PPM.

## 11. DIMENSIONAL CHECK:

For all QCNRV & CRHNRV Body Castings: Thickness of the body shall be checked throughout the surface on a grid of 100mm x 100mm and recorded & submitted to BHEL.

## 12. MARKING AND PACKING:

Representation of Marking and identification shall be as per drawing. Also following details to be marked on each casting, on a raised pad using low stress stamps and Castings shall be suitably packed to avoid damage during transit.

1. Foundry code, 2. Material specification, grade 3.Heat/melt number 4. Size and 5. Class rating.

## 13. INSPECTION AND CERTIFICATION:

13.1 Supplier shall have valid ISO:9001-2015 certificate for the duration of the contract. However, ISO:9001-2008 certification is acceptable till 14th September 2018.

13.2 Finished Castings shall be inspected at supplier works and certified as per BS EN 10204 Type 3.2 by any ASME Authorized Inspection Agency or their subsidiaries covering all details listed in Cl. 13.3.

13.3 Manufacturer's Test certificate (MTC) in English language, not limited to the following, shall accompany all products:

1. Purchase Order No. (BHEL), TDC No & its revision no, Test certificate no & date.
2. Material Specification, Grade & Class with applicable year of code, Heat Number, Quantity & Size
3. Steel making process, Chemistry including incidental elements - Heat wise, Product analysis, Carbon Equivalent (CE).
4. Heat treatment details of the material and test bars.
5. Mechanical test results-Tensile (UTS, YTS (0.2% offset), % elongation, % reduction in area), Impact & Hardness and NDE test results with reference & acceptance standard.
6. Repair details including HT, if any, Cleaning & Surface treatment details.
7. Any other information like clearance of sample casting.
8. Dimensional Inspection Report, where applicable.
9. For SS: Measured Radioactivity levels at 5cm from the surface of the castings shall be reported in the Test Certificate stating the measured value at the specified distance.
10. Creep test report as per CIP:938 (latest revision) for high chrome castings.
11. Valid ISO 9001 Certificate

## 14. AUDIT CHECKS AT BHEL:

BHEL reserves the right to carry out audit checks for chemistry, HT condition, mechanical test and NDT on representative test bars or job. Items found defective during check or subsequent processing at BHEL will be rejected.

## 15. END USE:

For use in valves and other components like flanges, fittings etc. for high temperature & high pressure applications meeting ASME Section I and ASME B 16.34 for Maitree Project (2x660 MW).

**Sketch of zones for RT**

**SV and SRV Base castings**

**Base** **Bonnet**

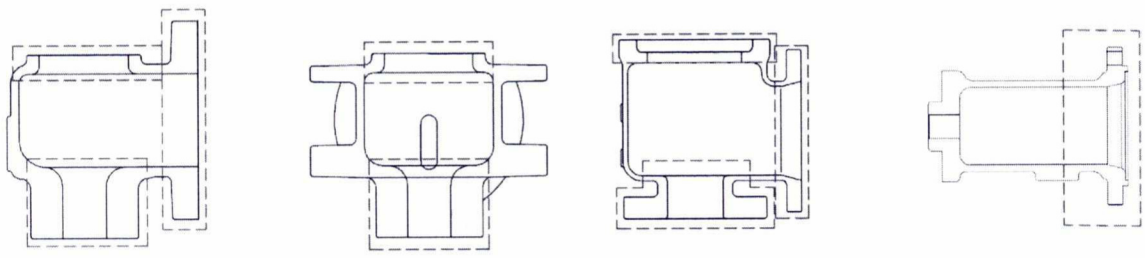

**Reheater Isolating Device Body**

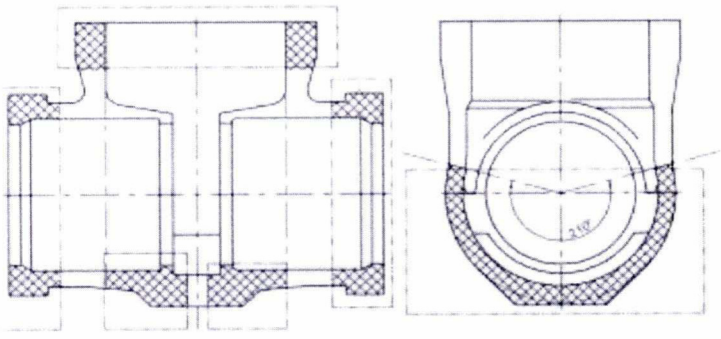

Radiography Area

Soot Blower Valve Body

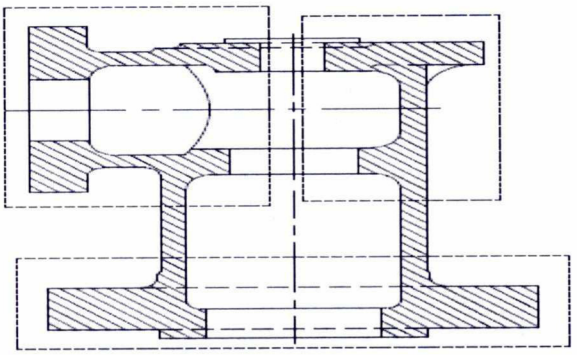

PART CODES : 920243870000, 920131810000, 920243870100, 920131810100
LRD IE, LRD IIE & WB IE – 2.5" 600#

— RADIOGRAPHY AREA

Quick Closing Non Return Valve Body

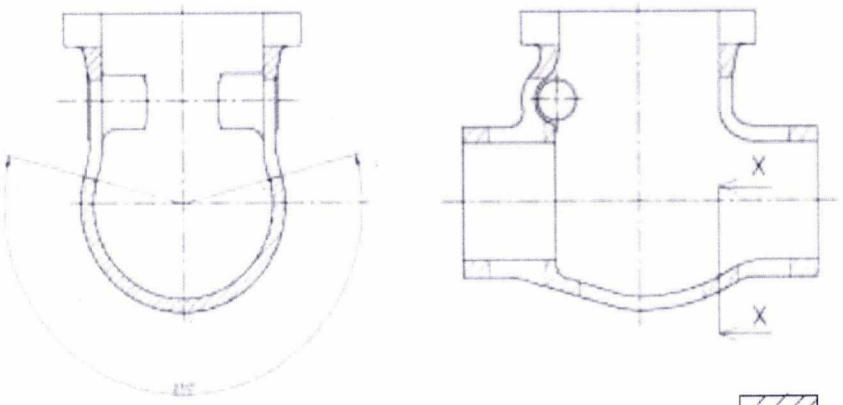


Section-XX

Radiography Area

Cold Reheat Non Return Valve Body

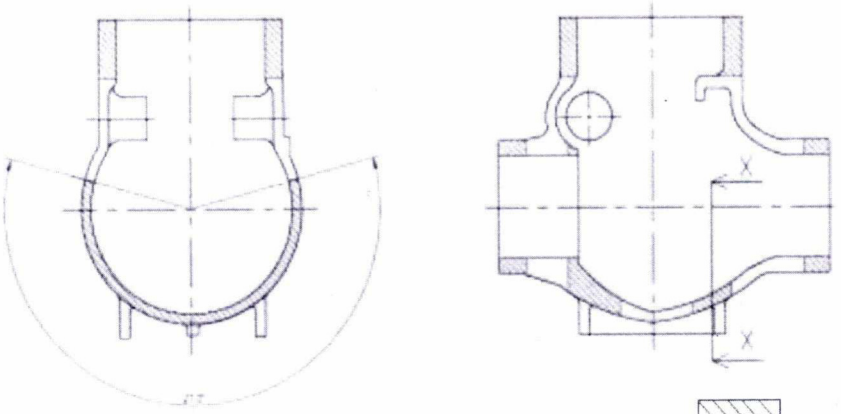


Section-XX

Radiography Area

**LP Bypass Stop cum Control Valve Body**

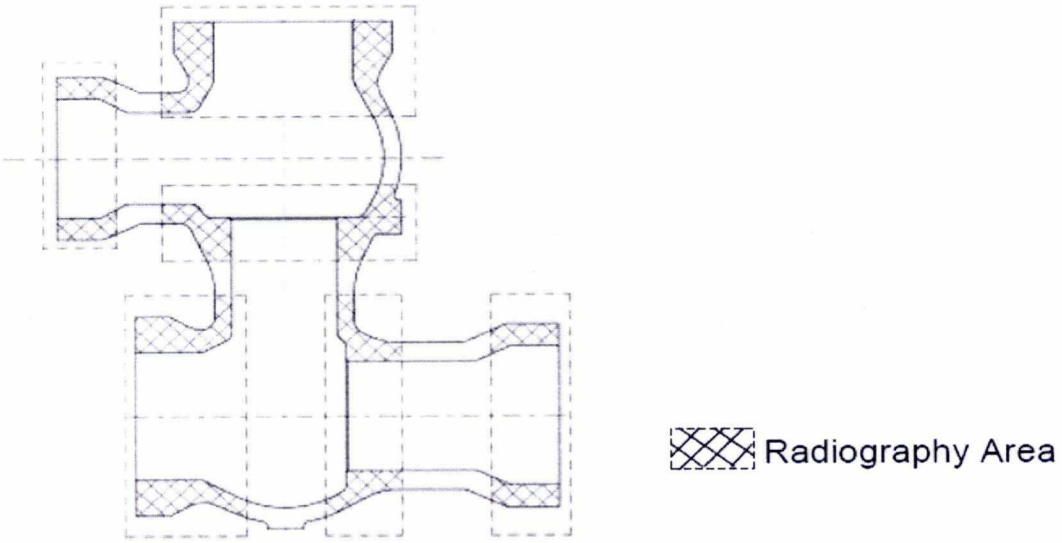


| | | | | | | |
|---|---|---|---|---|---|---|
| 19/02/19 | 19/02/19 | 19/2/19 | 19/02/19 | 19-2-19 | 19/02/19 | 19/02/19 |
| Abdur Rahman | G. Panneer Selvam | S. Anand Kumar | K. Rajasekaran | R. Rajappan | R. Ananthakrishnan | Amit Roy |
| Sr. Engr/ QA | DGM/QA | SDGM/PE/FB | DGM/Valves/Engg | SDGM/MM | AGM/Valves/Purchase | AGM/QA& BE |
| **Prepared By** | **Reviewed By** | | | | | **Approved By** |

**Revisions record:**
Rev. 00: Dt-16/05/2018 - Fresh Issue
*Rev. 01: Dt-21/07/2018- TDC Title revised to include refinery projects as per EIL Specification*

## 1. MATERIAL SPECIFICATIONS:

**All the codes, standards, specifications, drawings & procedures, etc., referred in this TDC shall be of latest revision as on the date of Enquiry/Purchase Order, whichever is earlier, unless specified otherwise.**

| | | |
|---|---|---|
| Carbon Steel (CS) | | : SA / A216 WCB,WCC |
| Alloy Steel (AS) | | : SA / ASTM A217 WC6, WC9 |
| Stainless Steel (SS) | | : SA / ASTM A351 CF8, CF8M |
| Additional Requirement | : | As listed below (Supplementary to above material specifications) |
| Size, Quantity, Grade/Class | : | As per Purchase Order & Drawing / Pattern. |

## 2. CHEMICAL COMPOSITION AND PROCESS:

a) Melting: As per the Specification, Fully Killed.
Carbon= 0.25% maximum: for SA / ASTM A216 WCB only.
Carbon= 0.15% maximum: for SA / ASTM A217 WC6 & WC9; S, P Mn- as per IBR
Product Analysis on test bar for each melt including residual elements shall be carried out.

b) All raw materials used in steel making including incoming scrap shall be checked by supplier to ensure freedom from radioactivity. (Applicable for SS material only)

c) Tolerance for chemistry shall be as per the above applicable material specifications/standards specified in Cl 1.

## 3. DIMENSIONS AND TOLERANCES:

**Dimensions & their** tolerances shall be as per applicable drawings. For untoleranced dimensions: VL: STDC: 023.

## 4. HEAT TREATMENT (HT):

CS – Shall be in Normalized Condition
AS – Castings: Normalized and Tempered.
Normalizing Temperature: SA/ASTM A217 WC6, WC9: 920-950°C
Tempering Temperature: SA/ASTM A217 WC6: 680°C min.; WC9: 720°C min.
SS - All Stainless Steel Castings shall be solution heat treated.
All other materials: Heat treatment shall be as per the applicable material specification & grade

## 5. MECHANICAL TESTS:

a) Test bars to be cast integral with the casting or separately. If cast separately, they shall be cast at the same time as the castings and from the same ladle. A metal strip with heat number stamped shall be fused with the test bar during casting, to maintain traceability.

If one (1) casting is made from more than one heat, separate test bars for each cast to be poured and all test bars shall satisfy the requirements. Tests mentioned in Table 1 shall be conducted per heat / Heat treatment batch, as per ASTM A370.

Perform tensile tests at room temperature in accordance with the procedures specified in ASTM A370. Perform a minimum of one tensile test. All yield strengths shall be determined using 0.2 % offset method of ASTM A370. The results of the tensile test(s) shall satisfy the applicable material specification requirements. Hardness testing shall be as per ASTM E10 or E18.

If the results of the tensile test(s) do not satisfy the applicable requirements, two additional tests on two additional test specimens (removed from the same TC with no additional heat treatment) may be performed in an effort to qualify the material. The results of each of these tests shall satisfy the applicable requirements.

Table 1.

<table>
<tr><th rowspan="2">No</th><th rowspan="2">TEST</th><th colspan="2">MATERIAL SPECIFICATIONS</th></tr>
<tr><th>SA/ASTM A216, 217</th><th>SA/ASTM A351</th></tr>
<tr><td>1</td><td>Tension Test</td><td colspan="2">As per the Material Specification</td></tr>
<tr><td>2</td><td>Hardness Test</td><td colspan="2">As per the Material Specification</td></tr>
<tr><td>3</td><td>Bend Test Specimen<br>1" x ¾ "</td><td><table><tr><th></th><th>Bend Angle</th><th>Dia of Pin</th></tr><tr><td>WCB</td><td>$90^0$</td><td>2t</td></tr><tr><td>WC6</td><td>$120^0$</td><td>3t</td></tr><tr><td>WC9</td><td>$90^0$</td><td>3t</td></tr></table></td><td>S3 of SA703</td></tr>
</table>

b) Inter Granular Corrosion (IGC) tet shall be conducted for all austenitic stainless steels as follows:
ASTM A262 Practice 'B' with acceptance criteria of '60 mils/year(max)'.
For the IGC test as described above, two sets of samples to be drawn from each solution annealing lot. One set shall correspond to the highest Carbon content and the other to the highest pressure rating.

## 6. FETTLING, DRESSING & CLEANING:

- Dressing of castings-Free from risers, in gates, notches, undercuts, deep marks etc.
- Fused wires, parting line fins, chills etc. shall be removed by grinding.
- Gas cutting if employed shall be done before Heat treatment.
- Preheat the material to 200$^0$C before gas cutting the Alloy steels.
- Castings shall be blast cleaned both inside and outside for the removal of fused sand, scales etc.
- Visual inspection: 100% as per MSS-SP:55. Acceptance: Type 1: none accepted; Type 2-12: A & B only accepted.

## 7. NON DESTRUCTIVE TESTING (NDT) AFTER HEAT TREATMENT

The NDE requirements for the castings shall meet the following as shown in Table-2 below. Castings shall be free from surface and internal defects like porosity, shrinkage, sand inclusion, crack, cold shut and other harmful defects. All castings shall be of Radiographic Quality.

1. Radiographic Testing Procedure (RT) : As per ASME B 16.34
2. Magnetic Particle Inspection (MPI) : As per ASTM E709
3. Liquid Penetrant Inspection (LPI) : As per ASTM E165

Radiography shall be done by X Ray /Gamma Ray to get the required sensitivity.

Valve castings shall undergo Radiographic Examination as specified below:

**Table: 2**

| Product | Components | Characteristics | Type of NDE Check | | |
|---|---|---|---|---|---|
| | | | RT | RT Area | RT Acc. Std |
| Conventional Valves and Other valves | ALL | 150 Class<br>≤24"<br>≥26" | #<br>100% | ASME B 16.34 | ASME B 16.34 |
| | ALL | 300 Class<br>≤16"<br>≥18" | #<br>100% | | |
| | ALL | ≥600 Class<br>All sizes | 100% | | |

#Radiographic testing requirements shall be as per Engineering Drawing or Valve material specification (VMS) issued by Customer/Consultant.

**NDE for SS material:** Castings shall be checked for radioactive contamination and reported. Survey meter shall be used to measure near the surface. Acceptance limits: Shall be less than 0.1 milli Rontgen (MR) per hour or 1 micro Sievert per hour.

**7.2 Surface NDE (MPI & LPI): Testing as per** ASME B16.34.

1. **Relevant indication: Surface-rupture NDE indication with major dimensions > 1.6 mm (1/16 in).**
2. **Linear indication: Surface NDE indication whose length is ≥ three times its width.**
3. **Rounded indication: Surface NDE indication whose length is < three times its width.**
   **Acceptance for MPI & LPI:**
4. Cracks are not permitted.
5. For linear indications other than cracks, indications must be separated by a distance greater than the length of an acceptable indication. Maximum allowable length of the indication shall be:
   a) For thickness(t) up to 13mm= 8mm,
   b) For thickness from 13 to 25mm = 13mm
   c) For thickness above 25mm=18mm.
6. For rounded indications, 4 or more indications in a line separated by 1.5 mm or less edge to edge are unacceptable. Maximum allowable diameter of the indication shall be:
   a) For thickness up to 13mm =8mm
   b) For thickness above 13mm =13mm

## 8. DEVELOPMENT STAGE OF CASTING:

a) During developmental stage, of new castings or change to an existing casting on account of change in dimension which warrants pattern correction, Foundry to ensure, first sample pieces meet dimensional, NDE & Quality requiremnets in this TDC, before starting bulk production. Sample castings, 3 castings with nominal bore (NB) ≤ 100mm. & 1 casting with NB > 100 mm for each type shall be inspected for dimension and RT requirements at BHEL/Vendor works by BHEL personnel. One Test bar for each melt/heat treatment batch shall be supplied along with casting for test at BHEL. RT shall be carried out on entire area of the casting to the acceptance requirement of Table-2. In addition 100% MPI on all critical areas like change of sections, riser & in gate portions shall be carried out. Casting to be inspected for dimensions after proof machining wherever necessary. If machining operation is invloved the same shall be done and defect free condition shall be ensured. If any defect noticed in RT and machining, the type of defect shall be analyzed and accordingly size of gate, runner, riser and pouring methodolgy to be modified to get defect free casting. Sampling shall be continued till achieving sound casting. After satisfactory development of sampling bulk production shall be started. However weld repaired areas identified in visual examination for doubtful indications to be probed by MPI. Accepted sample castings may be considered for fixing the nominal weight of the castings.

b) During developmental stage RT on sample castings of Yoke, Yoke Clamp & Wedge/Disc shall meet Level-3 of ASTM E446/E186/E280.

## 9. REPAIR:

Castings with unacceptable cracks, hot tears, shrinkage, etc. to be rectified by grinding & if required by welding. Welding to be done by qualified welder and qualified procedure as per ASME Section IX. For IBR items welders shall be qualified as per IBR.

Guidelines for repair of steel castings shall be as per SIP:VS:17 for activities like defects require/ not require weld repair, welding, Post Weld Heat Treatment, NDE and surface treatment. All repaired areas after PWHT shall be NDE tested and Hardness tested. Hardness shall meet material specification.

## 10. SURFACE TREATMENT:

SS castings to be pickled & passivated (after repair & HT if any) as per ASTM A380. Satisfactory passivity of the surface to be checked using SS passivity test kit (Free iron test). After passivation, rinsing & test, the rinsed demineralised water to be checked for chloride with 1% Silver nitride, which shall not exceed 0.5 PPM.

## 11. MARKING AND PACKING:

1. Vendor's name (Foundry Code) 2. Nominal size 3. Valve body rating 4. Material designation 5. Direction of flow (if any) etc. shall be integral on the body. Castings shall be suitably packed to avoid damage during transit.

Additionally, Heat/melt number to be marked on each casting, on a raised pad using low stress stamps.

## 12. INSPECTION AND CERTIFICATION:

12.1 **For IBR items**:

Products shall be inspected at works and the applicable IBR Form must be countersigned by the Inspecting Authority as indicated below in case the shop/**mill/foundry** is not recognised as a "Well known Foundry" under IBR:

- ❒ **Imported Items:** Inspecting Authority approved by IBR for the Country of origin.
- ❒ **Indigenously Supplied items:** Director of Boilers/Chief Inspector of Boilers/Inspecting Authority approved by IBR, for the respective state.

Certification in IBR Form III-F for IBR items from "IBR-Well Known Foundry" or "Inspecting Authority", as applicable, to be submitted. IBR Form III-F & **separate** Test certificate in English language with following details, shall accompany the product:

1. Purchase Order No. (BHEL), TDC No & its revision no, Test certificate no & date.
2. **Material** Specification, Grade **& Class** with applicable year of code, Heat Number, Quantity & Size
3. Steel making process, Chemistry including incidental elements - Heat wise, Product analysis, Carbon Equivalent (CE).
4. Heat treatment details of the material and test bars.
5. Mechanical test results-Tensile (UTS, YTS **(0.2% offset)**, % elongation, % reduction in area), Impact & Hardness and NDE test results with reference & acceptance standard.
6. Results of IGC test as per Clause 5 (b).
7. Repair details including HT, if any, Cleaning & Surface treatment details.
8. Any other information like clearance of sample casting.
9. Dimensional Inspection Report, where applicable.
10. **For SS:** Measured Radioactivity levels at 5cm from the surface of the castings shall be reported in the Test Certificate stating the measured value at the specified distance (not to be recorded in IBR Form).

**13. AUDIT CHECKS AT BHEL:**

BHEL reserves the right to carry out audit checks for chemistry, HT condition, mechanical test and NDT on representative test bars or job. Items found defective during check or subsequent processing at BHEL will be rejected.

**14. END USE:**

These castings are intended for use in *refinery projects as per EIL specification 6-44-0052 Rev. 7.*

| | | | | |
|---|---|---|---|---|
| 21/07/2018 | 21/07/18 | 21/07/18 | 21/07/18 | 21/07/18 |
| Abdur Rahman Sultan | G. Panneer Selvam | K. Rajasekaran | R. Ananthakrishnan | Amit Roy |
| Sr.Engineer /QA | DGM/QA | DGM/Valves/Engg | AGM/Valves/Purchase | AGM/QA&BE |
| **Prepared By** | **Reviewed By** | | | **Approved By** |

70-006

# Bharat Heavy Electricals Limited

High Pressure Boiler Plant, Tiruchirappalli-620 014. India.

Grams : BHARATELEC
Phone : --
Telex : 0455 - 211, 212, 295 & 296
FAX : 91 - (0431) - 52710

## PRODUCT ENGINEERING/VALVES



## TDC FOR UNTOLERANCED DIMENSIONS IN CASTING & FORGING DRAWINGS

**Scope :**

This technical delivery condition specifies the tolerance for the untoleranced dimension for the castings and forgings wherever tolerances are not specified in the applicable drawin applicable material TDC.

A. **Castings :**

| Nominal dimension (in mm) | | | | Tolerance on diameter or height (in mm) |
|---|---|---|---|---|
| UPTO | 4 | | | ± 0.5 |
| OVER | 4 | UPTO | 16 | ± 1.0 |
| OVER | 16 | UPTO | 65 | ± 1.5 |
| OVER | 65 | UPTO | 125 | ± 2.0 |
| OVER | 125 | UPTO | 250 | ± 2.5 |
| OVER | 250 | UPTO | 500 | ± 3.0 |
| OVER | 500 | UPTO | 1000 | ± 4.0 |
| OVER | 1000 | UPTO | 1600 | ± 5.0 |

B. **Forgings :** As per Table (1), (2), & (3) & (4)

PREPARED

CHECKED

APPROVED
(S. KUMAR
SM/PE/VSB)
28/2/94

TABLE 1. LENGTH, WIDTH, HEIGHT, MISMATCH, RESIDUAL FLASH AND TRIMMED FLAT OF DROP, PRESS AND UPSET FORGINGS (NORMAL TOLERANCES)

DROP, PRESS & UPSET FORGINGS – TOLERANCES FOR: LENGTH, WIDTH & HEIGHT*

MISMATCH ; RESIDUAL FLASH & TRIMMED FLAT (* DIA & LENGTH FOR UPSET FORGINGS)

NOTE: CENTRE TO SURFACE; STEP IN ONE DIE; $+\frac{1}{3}, -\frac{1}{3}$ OF TOTAL TOLERANCE

INTERNAL DIMENSION: REVERSE + AND – SIGNS.

| MISMATCH | RESIDUAL FLASH (+) TRIMMED FLAT (–) | TRIM LINE: ASYMMETRIC | TRIM LINE: STRAIGHT OR SYMMETRIC | WEIGHT (kg) ABOVE-TO (INCL) | DIFFICULTY OF MATERIAL M1 | DIFFICULTY OF MATERIAL M2 | COMPLEXITY S1 (>0.63 ≤ 1) | COMPLEXITY S2 (>0.32 ≤ 0.63) | COMPLEXITY S3 (>0.16 ≤ 0.32) | COMPLEXITY S4 (≤ 0.16) |
|---|---|---|---|---|---|---|---|---|---|---|
| 0.4 | 0.5 | | | 0-0.4 | | | | | | |
| 0.5 | 0.6 | | | 0.4-1.0 | | | | | | |
| 0.6 | 0.7 | | | 1.0-1.8 | | | | | | |
| 0.7 | 0.8 | | | 1.8-3.2 | | | | | | |
| 0.8 | 1 | | | 3.2-5.6 | | | | | | |
| 1 | 1.2 | | | 5.6-10 | | | | | | |
| 1.2 | 1.4 | | | 10-20 | | | | | | |
| 1.4 | 1.7 | | | 20-50 | | | | | | |
| 1.7 | 2 | | | 50-120 | | | | | | |
| 2 | 2.4 | | | 120-250 | | | | | | |
| 2.4 | 2.8 | | | | | | | | | |

QUALITY (NORMAL)

MM

| ABOVE TO (INCL) | 0 – 32 | 32 – 100 | 100 – 160 | 160 – 250 | 250 – 400 | 400 – 630 | 630 – 1000 | 1000 – 1600 | 1600 – 2500 |
|---|---|---|---|---|---|---|---|---|---|
| | $1.1^{+0.7}_{-0.4}$ | $1.2^{+0.8}_{-0.4}$ | $1.4^{+0.9}_{-0.5}$ | $1.6^{+1.1}_{-0.5}$ | $1.8^{+1.2}_{-0.6}$ | $2^{+1.3}_{-0.7}$ | | | |
| | $1.2^{+0.8}_{-0.4}$ | $1.4^{+0.9}_{-0.5}$ | $1.6^{+1.1}_{-0.5}$ | $1.8^{+1.2}_{-0.6}$ | $2^{+1.3}_{-0.7}$ | $2.2^{+1.5}_{-0.7}$ | | | |
| | $1.4^{+0.9}_{-0.5}$ | $1.6^{+1.1}_{-0.5}$ | $1.8^{+1.2}_{-0.6}$ | $2^{+1.3}_{-0.7}$ | $2.2^{+1.5}_{-0.7}$ | $2.5^{+1.7}_{-0.8}$ | $2.8^{+1.9}_{-0.9}$ | | |
| | $1.6^{+1.1}_{-0.5}$ | $1.8^{+1.2}_{-0.6}$ | $2^{+1.3}_{-0.7}$ | $2.2^{+1.5}_{-0.7}$ | $2.5^{+1.7}_{-0.8}$ | $2.8^{+1.9}_{-0.9}$ | $3.2^{+2.1}_{-1.1}$ | $3.6^{+2.4}_{-1.2}$ | |
| | $1.8^{+1.2}_{-0.6}$ | $2^{+1.3}_{-0.7}$ | $2.2^{+1.5}_{-0.7}$ | $2.5^{+1.7}_{-0.8}$ | $2.8^{+1.9}_{-0.9}$ | $3.2^{+2.1}_{-1.1}$ | $3.6^{+2.4}_{-1.2}$ | $4^{+2.7}_{-1.3}$ | $4.5^{+3}_{-1.5}$ |
| | $2^{+1.3}_{-0.7}$ | $2.2^{+1.5}_{-0.7}$ | $2.5^{+1.7}_{-0.8}$ | $2.8^{+1.9}_{-0.9}$ | $3.2^{+2.1}_{-1.1}$ | $3.6^{+2.4}_{-1.2}$ | $4^{+2.7}_{-1.3}$ | $4.5^{+3}_{-1.5}$ | $5^{+3.3}_{-1.7}$ |
| | $2.2^{+1.5}_{-0.7}$ | $2.5^{+1.7}_{-0.8}$ | $2.8^{+1.9}_{-0.9}$ | $3.2^{+2.1}_{-1.1}$ | $3.6^{+2.4}_{-1.2}$ | $4^{+2.7}_{-1.3}$ | $4.5^{+3}_{-1.5}$ | $5^{+3.3}_{-1.7}$ | $5.6^{+3.7}_{-1.9}$ |
| | $2.5^{+1.7}_{-0.8}$ | $2.8^{+1.9}_{-0.9}$ | $3.2^{+2.1}_{-1.1}$ | $3.6^{+2.4}_{-1.2}$ | $4^{+2.7}_{-1.3}$ | $4.5^{+3}_{-1.5}$ | $5^{+3.3}_{-1.7}$ | $5.6^{+3.7}_{-1.9}$ | $6.3^{+4.2}_{-2.1}$ |
| | $2.8^{+1.9}_{-0.9}$ | $3.2^{+2.1}_{-1.1}$ | $3.6^{+2.4}_{-1.2}$ | $4^{+2.7}_{-1.3}$ | $4.5^{+3}_{-1.5}$ | $5^{+3.3}_{-1.7}$ | $5.6^{+3.7}_{-1.9}$ | $6.3^{+4.2}_{-2.1}$ | $7^{+4.7}_{-2.3}$ |
| | $3.2^{+2.1}_{-1.1}$ | $3.6^{+2.4}_{-1.2}$ | $4^{+2.7}_{-1.3}$ | $4.5^{+3}_{-1.5}$ | $5^{+3.3}_{-1.7}$ | $5.6^{+3.7}_{-1.9}$ | $6.3^{+4.2}_{-2.1}$ | $7^{+4.7}_{-2.3}$ | $8^{+5.3}_{-2.7}$ |
| | $3.6^{+2.4}_{-1.2}$ | $4^{+2.7}_{-1.3}$ | $4.5^{+3}_{-1.5}$ | $5^{+3.3}_{-1.7}$ | $5.6^{+3.7}_{-1.9}$ | $6.3^{+4.2}_{-2.1}$ | $7^{+4.7}_{-2.3}$ | $8^{+5.3}_{-2.7}$ | $9^{+6}_{-3}$ |
| | $4^{+2.7}_{-1.3}$ | $4.5^{+3}_{-1.5}$ | $5^{+3.3}_{-1.7}$ | $5.6^{+3.7}_{-1.9}$ | $6.3^{+4.2}_{-2.1}$ | $7^{+4.7}_{-2.3}$ | $8^{+5.3}_{-2.7}$ | $9^{+6}_{-3}$ | $10^{+6.7}_{-3.3}$ |
| | $4.5^{+3}_{-1.5}$ | $5^{+3.3}_{-1.7}$ | $5.6^{+3.7}_{-1.9}$ | $6.3^{+4.2}_{-2.1}$ | $7^{+4.7}_{-2.3}$ | $8^{+5.3}_{-2.7}$ | $9^{+6}_{-3}$ | $10^{+6.7}_{-3.3}$ | $11^{+7.3}_{-3.7}$ |
| | $5^{+3.3}_{-1.7}$ | $5.6^{+3.7}_{-1.9}$ | $6.3^{+4.2}_{-2.1}$ | $7^{+4.7}_{-2.3}$ | $8^{+5.3}_{-2.7}$ | $9^{+6}_{-3}$ | $10^{+6.7}_{-3.3}$ | $11^{+7.3}_{-3.7}$ | $12^{+8}_{-4}$ |
| | $5.6^{+3.7}_{-1.9}$ | $6.3^{+4.2}_{-2.1}$ | $7^{+4.7}_{-2.3}$ | $8^{+5.3}_{-2.7}$ | $9^{+6}_{-3}$ | $10^{+6.7}_{-3.3}$ | $11^{+7.3}_{-3.7}$ | $12^{+8}_{-4}$ | $14^{+9.3}_{-4.7}$ |

TABLE 2 THICKNESS FOR DROP, PRESS AND UPSET FORGINGS AND EJECTOR MARKS FOR DROP AND PRESS FORGINGS (NORMAL TOLERANCES)

DROP, PRESS & UPSET FORGINGS – TOLERANCES FOR: THICKNESS; EJECTOR MARKS*

*(DROP AND PRESS FORGINGS ONLY)

| EJECTOR MARKS | WEIGHT (kg) ABOVE – TO (INCL) | DIFFICULTY OF MATERIAL M1 | M2 | COMPLEXITY S1 > 0·63 ≤ 1 | S2 > 0·32 ≤ 0·63 | S3 > 0·16 ≤ 0·32 | S4 ≤ 0·16 |
|---|---|---|---|---|---|---|---|
| 1 | 0-0·4 | | | | | | |
| 1·2 | 0·4-1·2 | | | | | | |
| 1·6 | 1·2-2·5 | | | | | | |
| 2 | 2·5-5 | | | | | | |
| 2·4 | 5-8 | | | | | | |
| 3·2 | 8-12 | | | | | | |
| 4 | 12-20 | | | | | | |
| 5 | 20-36 | | | | | | |
| 6·4 | 36-63 | | | | | | |
| 8 | 63-110 | | | | | | |
| 10 | 110-200 | | | | | | |
| 12·6 | 200-250 | | | | | | |

QUALITY (NORMAL)

| MM ABOVE – TO (INCL) | 0–16 | 16–40 | 40–63 | 63–100 | 100–160 | 160–250 | >250 |
|---|---|---|---|---|---|---|---|
| 1 | $1^{+0.7}_{-0.3}$ | $1.1^{+0.7}_{-0.4}$ | $1.2^{+0.8}_{-0.4}$ | $1.4^{+0.9}_{-0.5}$ | $1.6^{+1.1}_{-0.5}$ | $1.8^{+1.3}_{-0.6}$ | $2^{+1.3}_{-0.7}$ |
| 1·1 | $1.1^{+0.7}_{-0.4}$ | $1.2^{+0.8}_{-0.4}$ | $1.4^{+0.9}_{-0.5}$ | $1.6^{+1.1}_{-0.5}$ | $1.8^{+1.3}_{-0.6}$ | $2^{+1.3}_{-0.7}$ | $2.2^{+1.5}_{-0.7}$ |
| 1·2 | $1.2^{+0.8}_{-0.4}$ | $1.4^{+0.9}_{-0.5}$ | $1.6^{+1.1}_{-0.5}$ | $1.8^{+1.2}_{-0.6}$ | $2^{+1.3}_{-0.7}$ | $2.2^{+1.5}_{-0.7}$ | $2.5^{+1.7}_{-0.8}$ |
| 1·4 | $1.4^{+0.9}_{-0.5}$ | $1.6^{+1.1}_{-0.5}$ | $1.8^{+1.2}_{-0.6}$ | $2^{+1.3}_{-0.7}$ | $2.2^{+1.5}_{-0.7}$ | $2.5^{+1.7}_{-0.8}$ | $2.8^{+1.9}_{-0.9}$ |
| 1·6 | $1.6^{+1.1}_{-0.5}$ | $1.8^{+1.2}_{-0.6}$ | $2^{+1.3}_{-0.7}$ | $2.2^{+1.5}_{-0.7}$ | $2.5^{+1.7}_{-0.8}$ | $2.8^{+1.9}_{-0.9}$ | $3.2^{+2.1}_{-1.1}$ |
| 1·8 | $1.8^{+1.2}_{-0.6}$ | $2^{+1.3}_{-0.7}$ | $2.2^{+1.5}_{-0.7}$ | $2.5^{+1.7}_{-0.8}$ | $2.8^{+1.9}_{-0.9}$ | $3.2^{+2.1}_{-1.1}$ | $3.6^{+2.4}_{-1.2}$ |
| 2 | $2^{+1.3}_{-0.7}$ | $2.2^{+1.5}_{-0.7}$ | $2.5^{+1.7}_{-0.8}$ | $2.8^{+1.9}_{-0.9}$ | $3.2^{+2.1}_{-1.1}$ | $3.6^{+2.4}_{-1.2}$ | $4^{+2.7}_{-1.3}$ |
| 2·2 | $2.2^{+1.5}_{-0.7}$ | $2.5^{+1.7}_{-0.8}$ | $2.8^{+1.9}_{-0.9}$ | $3.2^{+2.1}_{-1.1}$ | $3.6^{+2.4}_{-1.2}$ | $4^{+2.7}_{-1.3}$ | $4.5^{+3}_{-1.5}$ |
| 2·5 | $2.5^{+1.7}_{-0.8}$ | $2.8^{+1.9}_{-0.9}$ | $3.2^{+2.1}_{-1.1}$ | $3.6^{+2.4}_{-1.2}$ | $4^{+2.7}_{-1.3}$ | $4.5^{+3}_{-1.5}$ | $5^{+3.3}_{-1.7}$ |
| 2·8 | $2.8^{+1.9}_{-0.9}$ | $3.2^{+2.1}_{-1.1}$ | $3.6^{+2.4}_{-1.2}$ | $4^{+2.7}_{-1.3}$ | $4.5^{+3}_{-1.5}$ | $5^{+3.3}_{-1.7}$ | $5.6^{+3.7}_{-1.9}$ |
| 3·2 | $3.2^{+2.1}_{-1.1}$ | $3.6^{+2.4}_{-1.2}$ | $4^{+2.7}_{-1.3}$ | $4.5^{+3}_{-1.5}$ | $5^{+3.3}_{-1.7}$ | $5.6^{+3.7}_{-1.9}$ | $6.3^{+4.2}_{-2.1}$ |
| 3·6 | $3.6^{+2.4}_{-1.2}$ | $4^{+2.7}_{-1.3}$ | $4.5^{+3}_{-1.5}$ | $5^{+3.3}_{-1.7}$ | $5.6^{+3.7}_{-1.9}$ | $6.3^{+4.2}_{-2.1}$ | $7^{+4.7}_{-2.3}$ |
| 4 | $4^{+2.7}_{-1.3}$ | $4.5^{+3}_{-1.5}$ | $5^{+3.3}_{-1.7}$ | $5.6^{+3.7}_{-1.9}$ | $6.3^{+4.2}_{-2.1}$ | $7^{+4.7}_{-2.3}$ | $8^{+5.3}_{-2.7}$ |
| 4·5 | $4.5^{+3}_{-1.5}$ | $5^{+3.3}_{-1.7}$ | $5.6^{+3.7}_{-1.9}$ | $6.3^{+4.2}_{-2.1}$ | $7^{+4.7}_{-2.3}$ | $8^{+5.3}_{-2.7}$ | $9^{+6}_{-3}$ |
| 5 | $5^{+3.3}_{-1.7}$ | $5.6^{+3.7}_{-1.9}$ | $6.3^{+4.2}_{-2.1}$ | $7^{+4.7}_{-2.3}$ | $8^{+5.3}_{-2.7}$ | $9^{+6}_{-3}$ | $10^{+6.7}_{-3.3}$ |
| 5·6 | $5.6^{+3.7}_{-1.9}$ | $6.3^{+4.2}_{-2.1}$ | $7^{+4.7}_{-2.3}$ | $8^{+5.3}_{-2.7}$ | $9^{+6}_{-3}$ | $10^{+6.7}_{-3.3}$ | $11^{+7.3}_{-3.7}$ |
| 6·3 | $6.3^{+4.2}_{-2.1}$ | $7^{+4.7}_{-2.3}$ | $8^{+5.3}_{-2.7}$ | $9^{+6}_{-3}$ | $10^{+6.7}_{-3.3}$ | $11^{+7.3}_{-3.7}$ | $12^{+8}_{-4}$ |

TABLE 3 STRAIGHTNESS, FLATNESS AND CENTRE TO CENTRE DIMENSIONS FOR DROP, PRESS AND UPSET FORGINGS

## DROP, PRESS AND UPSET FORGINGS

NOTE. QUALITY E DOES NOT APPLY TO UPSET FORGINGS

### RANGE OF TOLERANCES FOR STRAIGHTNESS AND FLATNESS

| LENGTH ABOVE TO (INCL) | | MM | | | | | | | | | | | | | | |
|---|---|---|---|---|---|---|---|---|---|---|---|---|---|---|---|---|
| | | 0 100 | 100 125 | 125 160 | 160 200 | 200 250 | 250 315 | 315 400 | 400 500 | 500 630 | 630 800 | 800 1000 | 1000 1250 | 1250 1600 | 1600 2000 | 2000 2500 |
| QUALITY | NORMAL | 0·6 | 0·7 | 0·8 | 0·9 | 1 | 1·1 | 1·2 | 1·4 | 1·6 | 1·8 | 2 | 2·2 | 2·5 | 2·8 | 3·2 |

### RANGE OF TOLERANCES FOR CENTRE TO CENTRE DIMENSIONS

| LENGTH ABOVE TO (INCL) | | MM | | | | | | | | | | |
|---|---|---|---|---|---|---|---|---|---|---|---|---|
| | | 0 100 | 100 160 | 160 200 | 200 250 | 250 315 | 315 400 | 400 500 | 500 630 | 630 800 | 800 1000 | 1000 1250 |
| QUALITY | NORMAL | ±0·3 0·6 | ±0·4 0·8 | ±0·5 1 | ±0·6 1·2 | ±0·8 1·6 | ±1 2 | ±1·2 2·4 | ±1·6 3·2 | ±2 4 | ±2·5 5 | ±3·2 6·4 |

TABLE 4 FILLET, EDGE RADII AND BURRS FOR DROP, PRESS AND UPSET FORGINGS

DROP, PRESS AND UPSET FORGINGS

FILLET AND EDGE RADII TOLERANCES

| r MM ABOVE – TO (INCL) | + | – |
|---|---|---|
| 0 – 10 | 50% | 25% |
| 10 – 32 | 40% | 20% |
| 32 – 100 | 32% | 15% |
| > 100 | 25% | 10% |

BURR TOLERANCES
(AND PARTING LINE FINS FOR UPSET FORGINGS)

| WEIGHT (kg) ABOVE – TO (INCL) | a | b |
|---|---|---|
| 0 – 1 | 1 | 0·5 |
| 1 – 6 | 1·6 | 0·8 |
| 6 – 40 | 2·5 | 1·2 |
| 40 – 250 | 4 | 2 |

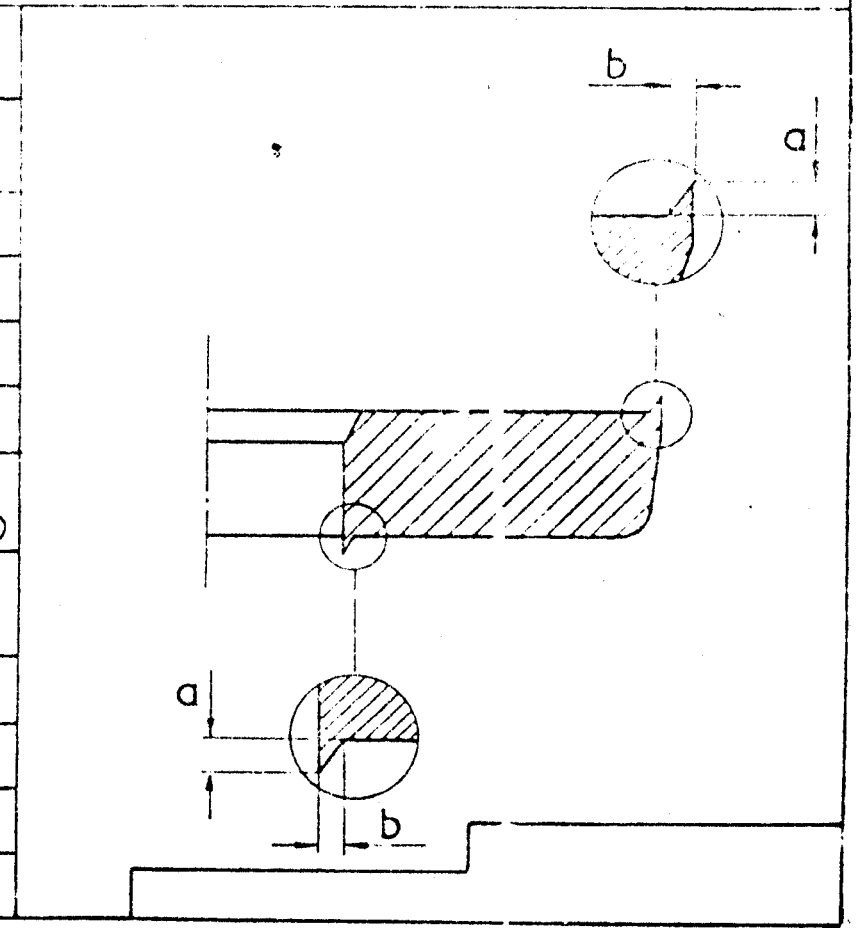

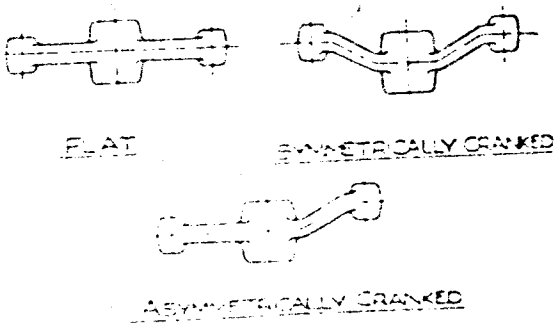


Fig. 1. Die lines

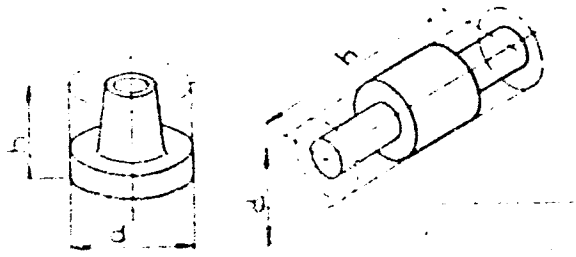

Fig. 2. Enveloping shapes of circular forgings

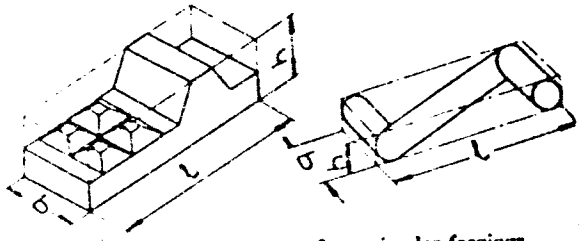

Fig. 3. Enveloping shapes of non-circular forgings

NOTE :

1. The type of steel used is determined as falling within one of the following categories :

   a. M1 - steel with carbon content not more than 0.65% and total of specified alloying elements not more than 5

   b. M2 - steel with carbon content above 0.65% or total of specified alloying elements above 5%.

2. Complexity factor of a forging is the ratio of the weight of the forging to the weight of the overall shape necessary to accommodate the maximum dimensions of the forging.

The resulting complexity factor is determined as falling within one of the following categories :

S4 - Upto and including 0.16

S3 - Above 0.16 upto and including 0.32

S2 - Above 0.32 upto and including 0.63

S1 - Above 0.63 upto and including 1.00

---

Annexure - I

## Certificate by Chartered Accountant on letter head

This is to Certify that M/S ....., (hereinafter referred to as 'company') having its registered office at ..... is registered under MSMED Act 2006, (Entrepreneur Memorandum No (Part–II) ..... dtd:....., Category: ..... (Micro/Small)). (Copy enclosed).

Further verified from the Books of Accounts that the investment of the company as per the latest audited financial year ..... as per MSMED Act 2006 is as follows:

1. **For Manufacturing Enterprises:** Investment in plant and machinery (i.e. original cost excluding land and building and the items specified by the Ministry of Small Scale Industries vide its notification No.S.O.1722(E) dated October 5, 2006 :
   Rs.....Lacs
2. **For Service Enterprises:** Investment in equipment (original cost excluding land and building and furniture, fittings and other items not directly related to the service rendered or as may be notified under the MSMED Act, 2006:
   Rs.....Lacs

**(Strike off whichever is not applicable)**

The above investment of Rs.....Lacs is within permissible limit of Rs.....Lacs for .....Micro / Small **(Strike off which is not applicable)** Category under MSMED Act 2006.

Or

The company has been graduated from its original category (Micro/ Small) **(Strike off which is not applicable)** and the date of graduation of such enterprise from its original category is ..... (dd/mm/yyyy) which is within the period of 3 years from the date of graduation of such enterprise from its original category as notified vide S.O. No. 3322(E) dated 01.11.2013 published in the gazette notification dated 04.11.2013 by Ministry of MSME.

Date:

(Signature)

Name -

Membership number -

Seal of Chartered Accountant