1. Inviting Tenders

Bid submission in two part, Part-I: Techno-commercial bid and Part-II: Price bid are hereby invited for entering into Rate Contract for **manufacture and supply of radiographic quality castings of valve (2"to 32") as per BHEL drawings of material grade (CF3M) upto 2000 Kg single piece castings** as per relevant TDC/Matl Standards/Drgs and bill of materials mentioned. **Sample Drawings are attached in the tender documents**. The bidder shall submit his response through bid submission to the tender on e-Procurement platform at **https://bhel.abcprocure.com**. **Offers in any other mode will not be accepted.**

a) The bidder would be required to register on the e-procurement market place **https://bhel.abcprocure.com** and submit their bids online. **Sealed cover bids / e-Mails / FAX / Manual offer will NOT be accepted.**
b) The bidder has to keep track of any changes by viewing the addendum / Corrigendum's issued by the Purchaser on time-to- time basis in the E-Procurement platform. The Company calling for tenders shall not be responsible for any claims/problems arising out of this.
c) The user should complete all the processes and steps required for bid submission. The successful bid submission can be ascertained once acknowledgement is given by the system through bid submission number after completing all the processes and steps. BHEL and M/s e Procurement Technologies limited will not be responsible for incomplete bid submission by users. Users may also note that the incomplete bids will not be saved by the system and are not available for the Purchaser for processing.
d) Before uploading scanned documents if any, the bidders shall sign on all the statements, documents, certificates uploaded by him, owning responsibility for their correctness / authenticity.

Bid		Documents required
Part-I	Techno-Commercial Quotation and Pre-Qualification in response to tender enquiry no. 1920-048E dt 11.07.2019	As per check list
Part-II	Price Quotation in response to tender enquiry no. 1920-048E dt 11.07.2019	Price bid

Pre-Qualification Terms:

1. **Vendor has to present any customer Purchase Order of Stainless Steel Castings with minimum cumulative value of Rs. 10,00,000 (Ten Lakh Only) as proof. Purchase Order/s date should be 01.01.2016 or afterwards.**

2. **Vendor has to give undertaking that he is manufacturer of Stainless Steel Castings and have capability to produce CF3M grade Castings.**

Quotations shall reach us by 1400 Hrs (IST) on due date. Techno-Commercial Quotation and Pre-Qualification **shall be opened at 1530 hrs (IST) on due date.**

For finalizing prices, BHEL may go in for opening of sealed price bids (Part-II) or conduct reverse auction.

Price bids/Reverse Auction of only those bidders shall be opened/conducted who qualifies in techno-commercial (Part-I) evaluation. Qualification in Part-I shall be adjudged by criteria mentioned in checklist. Date shall be informed.

Please submit all the documents/confirmations as per checklist. This will facilitate quick evaluation and early finalization of tender.

In case overseas suppliers route their offer through their accredited selling agents, a letter of authority should be furnished mentioning the name and address of their selling agents who are authorised to bid, negotiate and conclude a Contract on their behalf. This letter should be sent before the tender submission otherwise bid will be considered as unsolicited bid.

G1.2 INSTRUCTION TO BIDDER (In case of E-Procurement)

Interested bidders/Suppliers shall submit their offer through e-Procurement mode at https://bhel.abcprocure.com. **Offers in any other mode will not be accepted.**

For Enterprise Procurement System (EPS) Bidders/Suppliers are requested to follow these steps:

a. Requirements

1. Computer with good Internet Connection.
2. Operating System should be Windows Vista / Windows 7 and above.
3. Web Browsers: Internet Explorer 9.0 (32- bit Browser only) & above

b. Mandatory Requirements:

Suppliers interested for registration for BHEL Open Tenders should have a valid DSC (Digital Signature Certificate) before Proceeding forward for Registration. Herein a Valid DSC refers to a Class- II/III Digital Signature Certificate (DSC) for Signing & Encryption (Required both digital signature certificate: Signing & Encryption) of bids issued by any of the valid Certifying Authorities (approved by Controller of Certifying Authorities) in India. Valid Digital Signature Certificate (DSC) must be installed in a computer system from where you want to access the website.

For Unregistered Suppliers in EPS:

Procedure for Online Registration in EPS for Open Tender Suppliers for BHEL. Please follow the below steps for registration: -

1. Click Register Button (Top of the Screen).
2. Please input your organization PAN No (in case of Indian supplier) or select your "country" in case you are an overseas Supplier.
3. Select Units to participate in.
4. Fill up Company details.
4. Key in your desired login id If you have registered by keying in PAN No. then your desired login id will be prefixed by "OTI", In case of **overseas suppliers it will be also prefixed with "OTI"**.

5. Fill in the Captcha code & agree to the terms & conditions and privacy policy of this website and click SUBMIT.

Once the above steps are completed, contact to M/s eProcurement Technologies Limited for ID Activation. M/s e Procurement Technologies limited, Ahmedabad will activate your ID within 2 business hours. After registering, follow the steps provided in "For Registered Supplier" to view RFQ.

NB: - 1 BHEL Administrator or user will have no role for approving Registration and Open Tenders and DSC for any supplier who has registered himself from the front END which is in case of OT.

For Registered Supplier in EPS:

1. Supplier visits EPS home page
2. Supplier Login in with their user id and password
3. Search the RFQ ID and views it.
4. Attaches themselves to the RFQ by clicking the "I/We wish to participate".
5. Supplier fills the bid template and makes necessary attachments
6. Supplier submits their bid by clicking Sign, Encryption & Save button.

In any problem is faced by supplier while login/registration in EPS (**https://bhel.abcprocure.com**) and any other assistance, please contact the support team of M/s e Procurement Technologies limited, Ahmedabad as per details mentioned in table below: -

Name	Contact Nos.	e-mail ID	Role	Location
Mukunthan	+91 6353215001	Trichy.bhel@eptl.in	Support Executive	Trichy
Swapnil Hamilton	+91 7940270549	swapnil.h@eptl.in	Support Executive	HO – Ahmedabad
Hardik Oza	+91 7940270560	Hardik.oza@eptl.in	Support Executive	HO – Ahmedabad
Ankur Bhatt	+91 7940270590	ankur.bhatt@eptl.in	Support Executive	HO – Ahmedabad
Prashant Rajyaguru	+91 7940270545	prashant@eptl.in	Asst. Manager – Implementation & Support	HO – Ahmedabad
Dharam Rathod	+91 7940270596	dharam@eptl.in	Manager – Implementation & Support	HO – Ahmedabad
Pradip Parmar	+91 7940270532	pradip@eptl.in	Sr Mgr – Implementation & Support	HO – Ahmedabad
Devang Patel	+91 7940270576	devang@eptl.in	Sr Manager – Implementation & Support	HO – Ahmedabad

G2.2. OTHER IMPORTANT INFORMATION RELATED TO E-PROCUREMENT TENDERS

1. The bidder has to keep track of any changes by viewing the addendum / Corrigendum's issued by the Purchaser on time-to- time basis in the E-Procurement platform. The Company calling for tenders shall not be responsible for any claims/problems arising out of this.
2. The user should complete all the processes and steps required for bid submission. The successful bid submission can be ascertained once acknowledgement is given by the system through bid submission number after completing all the processes and steps. BHEL and M/s e Procurement Technologies limited will not be responsible for incomplete bid submission by users. Users may also note that the incomplete bids will not be saved by the system and are not available for the Purchaser for processing.
3. Before uploading scanned documents if any, the bidders shall sign on all the statements, documents, certificates uploaded by him, owning responsibility for their correctness / authenticity.
4. On the due date of tender opening, only technical bids will be opened. The opened technical bids will be evaluated by us and clarifications required, if any, will be called for from the bidders on technical and commercial points. If no reply is received from the vendor for the clarification raised by BHEL with in the final cut-off date, those vendors offer will be processed with the documents available / submitted against this tender. Offers not meeting the required specification and technical condition will be summarily rejected. The price bids of technically suitable bidders will be opened on a later date with prior intimation to techno-commercially suitable bidders.
5. Ranking L-1, L-2 etc. shall be done for individual item for the techno-commercially acceptable offers on landed cost to BHEL, IVP Goindwal basis and BHEL reserves the right to place order for individual items with different vendors. In the event of more than one vendor becoming L1 for the item, the enquiry quantity will be shared equally among all the L1 vendors.
6. BHEL reserves the right to negotiate with L1 vendor or re-float the tender for items where, **L1** price is not the lowest acceptable price; BHEL reserves the right to increase or decrease the tender quantity.
7. **If supplier is mentioning delivery destination within state/ outside state depending upon his location of factory, Free On Road etc these are assumed as on FOR Goindwal. If supplier is wishing to give delivery on Ex works basis, then he has to clearly mention about it.**

1.1 AGENCY COMMISSION:

In respect of offers from overseas suppliers, agency commission, if any, payable to their agents in India, shall invariably be shown separately in the proforma invoice and this will be paid by us in India, in Indian Rupees, on satisfactory completion of the Contract.

If overseas Principal has any tie up with any third party in respect of Agency Commission it should be declared while submitting the offers.

Copies of current Agency, / Agreemental Authorization Letter in respect of Agency Commission shall be furnished along with order, if not made available earlier.

The details of tender items is as per below details:

Sl. No.	Material code (Group Code)	Material Spec: ASTM	Item Description	Tender Qty (Metric Tons MTs)
1.	G92110410000	CF3M CASTING	Valve Casting & Wall Blower components (Body, Bonnet, Yoke, Wedge and other components for all sizes	25
		Present taxes and any other charges		Vendor to mention

The tender quantity given above is tentative only. The actual ordering quantity may vary between grades and also overall tender quantity can vary by any percentage. **Also kindly note that material codes given above are codes which represent a group (e.g material code/group code '**G92110410000**' represents all castings of CF3M -**CASTING **as per Description). These material/group code is generated for e-tendering purpose only. Actual PO will be released as per material codes given in "list of items". List of items is a probable list. New items in the list of items in the same can be added from time to time which will also be covered under this RC.**

2. **PRICE BASIS**

G3. PRICE BASIS

a. The reimbursement of GST portion of invoice shall be released only upon: -

1. vendor declaring such invoice in his GSTR-1and
2. receipt of goods and Tax invoice by BHEL and
3. Confirmation of payment of GST thereon by vendor on GSTN portal.
4. Above is subject to receipt of goods/service and tax invoice thereof along with vendor
   declaring invoice in his return and paying GST within timeline prescribed for availing ITC
   by BHEL.

Since ITC can be availed only when BHEL is in possession of GST Tax invoice and after receipt of goods. Thus, vendor to ensure timely dispatch of goods and Tax invoice. It may be noted that in case of any delay in receipt of Tax Invoice and/or receipt of goods, the ITC availment by BHEL will get delayed thus entailing additional cash outflow & may even get denied if ITC availment timelines are breached.

Further ITC can be availed only when vendor has declared such invoice in his outward supply Return GSTR-1 and after GST thereon has been paid by him at the time of filing of monthly Return.

b. In case GST credit is delayed/denied to BHEL due to non/delayed receipt of goods and/or tax invoice or expiry of timeline prescribed in GST law for availing such ITC, or any other reasons not attributable to BHEL, GST amount shall be recoverable from vendor along with interest levied / leviable on BHEL.

c. In case vendor delays declaring such invoice in his return and GST credit availed by BHEL is denied or reversed subsequently as per GST law, GST amount paid by BHEL towards such lTC reversal as per GST law shall be recoverable from vendor/contractor alongwith interest levied / leviable on BHEL.

d. Any GST liability arising on BHEL under Reverse Charge (RCM) before actual receipt of goods and/ or Invoice thereof would be subject to recovery of Interest leviable for the period between the date of such liability and actual date of eligibility of ITC based on receipt of goods, receipt of Invoices and other conditions specified in GST Law as applicable.

e. Order of enquiry item sl. No. shall be maintained in the quotation.

f. The rates quoted shall be firm and fixed. No price variation is proposed and allowed.

g. Rates quoted should be F.O.R Goindwal basis. If bidder has quoted Ex Works, loading shall be done as per BHEL discretion for tender evaluation.

2a. Rates of raw casting components shall be quoted on **rate INR per kg basis & on FOR GOINDWAL SHAIB basis. Foreign supplier has to quote on FOB basis & in USD/INR.**

2b. Rates shall be inclusive of pattern and development cost. The patterns cost shall be borne by the supplier.

2e. **Comparison shall be made on landed rate per kg to BHEL Goindwal Sahib for deciding L1 offer.** Loading as per BHEL discretion will be done in case of deviation for delivery destination. For comparison purpose & Agent commission conversion rate from USD to INR will be taken for tender opening date. For conversion of fixed RT charges & repair charges into USD, the $ rate at tender opening date will be taken throughout the contract. If the relevant day happens to be a bank holiday, then the forex rate as on the previous bank (SBI) working day shall be taken.

2f. Unloading of material at Main Stores of BHEL shall be arranged by BHEL.

2g. In case of disputes/errors/difficulty in interpretation of rates mentioned in figures, rates mentioned in words shall be taken as final.

2h. Order of enquiry Sl. No. shall be maintained in quotation.

Variation in taxes or any other statutory levis during contractual delivery period shall be to BHEL's account.

3. **a. <u>VALIDITY OF OFFERS:</u>**

The offers shall be kept open for acceptance **<u>for 90 days</u>** from the date of opening of the tender. In case of extension of tender opening date, the validity shall be suitably revised.

b.**<u>VALIDITY OF RATE CONTRACT:</u>**

<u>The rate contract with PVC is proposed to be valid for one year from the date of finalization of tender</u>. Same can be extended again for one year on mutual agreement. BHEL can terminate rate contract earlier also without assigning any reason.

4. **<u>PRICE VARIATION:</u>**

Casting prices shall be revised based on the prices of only four materials [viz; Ferrous scrap, Ferromoly, Nickel & Chromium] ; labour, Fuel & Power index. Price variation due to change in any other input shall not be considered during the currency of RC. Revised rates shall be arrived at by using following formulae:

Material	Formulae for calculating X_n, price for two months period
CF3M	**(Xn=Xo+ 0.7364(Hn-Ho)+ 0.0273(Fmn-Fmo) + 0.2073 (Crn-Cro) + 0.12 (Nin-Nio) + 0.18*ΔE + 0.10*ΔL)**
TERMS USED	
X_o	Price finalized & valid for first two months of the rate contract; taken as base for further calculations.
X_n	Revised price of the material to be declared after every two months. POs shall be released on this revised price for two months period.
H_o	Ferrous scrap price HMS (High Melting scrap 80:20 mix) from the Metal bulletin (monthly avg data for the preceding two months of finalization). Shall be informed by BHEL alongwith final rates.
H_n	New Average ferrous scrap price HMS (80:20 mix) taken from the Metal bulletin. (Avg for just preceding two months when the price is being revised)
Fm_0	Price of Ferromoly taken from the Metal bulletin, basis as for HMS, H_0 above.
Fm_n	New Average Price for Ferromoly taken from the Metal bulletin, basis as for HMS, H_n above
Cr_0	Price of Chromium, taken from the Metal bulletin, basis as for HMS, H_0 above.
Cr_n	New Average Price for Chromium taken from the Metal bulletin, basis as for HMS, H_n above
Ni_0	Price of Nickel during the start date of the rate contract taken from the website **www.lme.com,** basis as for HMS H_0 above. From average values of two months, Price in Rs./kg for all values of two months shall be calculated.
Ni_n	New Price arrived for Nickel from the website www.lme.com, basis as for HMS, H_0 above
ΔE	Change in whole sale price index Numbers– All-India basis reference taken from http://rbi.org.in/home.aspx>>publications>>Monthly>>RBI bulletin>>Prices [Table no. 21]-1.2: Fuel and Power. ΔE will be calculated as per below formula: **ΔE=(En-E0)/E0*X0*0.18;** where E0 is base index for Fuel & Power and En is index for Fuel & Power for new months
ΔL	Change in Consumer Price Index Numbers for Industrial Workers – All-India basis reference taken from http://rbi.org.in/home.aspx>>publications>>Monthly>>RBI bulletin>>Prices [Table no. 19]-1. ΔL will be calculated as per below formula: **ΔL=(Ln-L0)/L0*X0*0.10;** where L0 is base index for labour and En is index for labour for new months
All prices used in formulae are in Rs. per kg. $ (USD) to Rs. price shall be taken from www.rbi.org.in . Rs./kg value for any variant shall be derived for each value by using $/kg for respective date(nearest preceding date) and then average shall be derived for the period. For foreign supplier also new rate by PVC will be calculated in INR firstly. For calculating rate in INR, PVC formula on landed cost to BHEL (L1 rate in INR) will be applied. In this calculation for conversion of H, Fm, Cr, Ni rate from $ to INR, the $ (USD) rate at respective date (the date at which metal rate is taken) will be taken. Then this new rate in INR will be converted to $ (USD) by considering $ rate at tender opening date.	

Finalized prices shall be applicable for two months from the date of finalization of rate contract. These finalized prices shall be taken as base prices, X_o. Base indices shall be

taken as avg. of indices published in the period of previous two months from date of finalisation. New casting rates to be operated for POs to be released from the end of two months from RC finalization date shall be declared based on indices for the previous two months

5. SCOPE OF SUPPLY:

Material shall be supplied as per the applicable latest Technical Delivery Conditions (TDC)/ Material Standard requirements/Drawings/RT Procedure and other requirement as given in the Purchase Order. The TDC applicable for Indian suppliers is TDC:0412 Rev26 (or latest applicable) and for foreign supplier is TDC:0:433 Rev00 (or latest applicable).

It is made clear that POs released in sets, i.e. [all components for a particular type of valve] have to be supplied in sets only. The claim of vendor for payment of supplies against any PO can be put on hold if the components have not been delivered in sets. However, depending upon our own planning and requirement, BHEL may ask for delivery of some components not in sets, for which due consideration shall be given relieving the vendor from above condition. Also vendor has to supply items in oldest PO first if any item is pending in more than two POs.

6. WELL KNOWN FOUNDARY:

It is the responsibility of successful vendor to ensure that all the castings are supplied with IBR TC [Valid IBR Well known Foundry status clearly mentioned on the TC] or under witness pouring clearly endorsed by IBR authority/authorized inspecting authority. The foundry will provide TCs in Form III G/III F (as applicable as per TDC) signed by competent authority. The cost for witness pouring from authorized inspecting authority has to be borne by supplier.

7. DELIVERY SCHEDULE:

There is no firm commitment against tender quantity. During the currency of the Rate Contract, BHEL will release POs from time to time based upon our requirement of any tonnage. Vendor shall be required to complete the order as per the schedule mentioned in PO/delivery requirement given through other communications. Vendor has to mention minimum time after which supply will start after placement of PO for items in which pattern is available with vendor as per Annexure-A.

8. ACCESS TO MANUFACTURING PREMISES:

While Purchase Orders placed on the vendor are under execution, authorized representatives of BHEL shall be allowed free access to the manufacturing facilities for the purpose of inspection or monitoring the progress of purchase orders. This access will also be extended to representatives of BHEL's customers accompanying the authorized representative/s of BHEL, if our contractual requirements with our customers call for the same.

9. PROCEDURE FOR CASTING WEIGHT ESTABLISHMENT

Weights of same patterns for different material grade castings shall be same. These established weights shall be applicable to all vendors. Weights shall be established again only on revision of dimensions of component. Weight shall be established as per clause no.

08 of TDC: 0:412: Rev 26 (or latest applicable). Rate of any item shall be derived by multiplying established weight with rate per kg for the period when PO is being released. When a vendor is taking any item as a new development, if his weight is less than already established weight, this weight will be considered as new established weight and binding on all vendors. If his weight is more than already established weight, it shall be binding on the vendor. For any new item, not established till date, the first verified weight by BHEL after complete dimensional verification and acceptance shall be declared as established weight (as per clause No. 08 of TDC). Payments shall be made on established weights only. Additional claim of any vendor due to his extra weight over and above the established weight shall not be entertained.

.

10. DEVELOPMENT ORDERS FOR CASTINGS REQUIRING NEW PATTERNS:

If a party has already developed a particular type and size of casting, regular orders will be placed for those castings. For the item/s for which pattern/s is yet to be developed by the party, consent from the vendor shall be sought for the development of pattern, and in the first instance, a developmental order/s will be placed. The vendor has to develop the pattern maximum within 45 days and supply first sample castings within next 30 days of pattern completion report submitted to BHEL, failing which BHEL may cancel the PO. Vendor need to submit the pattern completion report on the lapse of 45 days from the date of PO placement. Bulk supply shall be undertaken only after sample clearance. Quality requirement of new developments shall be as per TDC: 0412 Rev 26/_TDC:0:433 Rev00(or latest revisions applicable from time to time) besides other technical documents.

11. TERMS OF PAYMENT:

a. Due payment against supplies received shall be due after 30 days of receipt and acceptance of material and shall be paid within next 15 days' period. In case of any deviation from standard payment term mentioned, BHEL at its discretion may load on the item price at ''Base rate of SBI (as applicable on the date of bid opening; Techno-commercial bid opening) + 6% shall be considered for loading for the period of relaxation sought by bidders.
b. Documents to be submitted (if applicable)
    i. Tax invoice (Invoice shall be GST compliant and should contains all the required information such as GST No, HSN code etc.)
    ii. Transporter copy along with material/consignment.
    iii. Material Test Certificates (MTC) and
    iv. Compliance Certificate.
    v. Radiographic films and reports, if required.
    vi. Third Party Inspection reports, if applicable.
    vii. Packing Note
c. GST registration number is to be submitted by qualified vendor as per GST law.
d. It is mandatory to mention proper material codes in the invoices and separate invoices to be raised for different POs.
e. BHEL releases payment through EFT mode ONLY. Necessary details may please be submitted by filling required format before release of payment.
f. Conditions relating to release of GST portion:
Payment of GST portion will be released to vendor only upon completion of statutory requirement and further subject to following:
The reimbursement of GST portion of invoice shall be released only upon: -

5. vendor declaring such invoice in his GSTR-1and
6. receipt of goods and Tax invoice by BHEL and
7. Confirmation of payment of GST thereon by vendor on GSTN portal.
8. Above is subject to receipt of goods/service and tax invoice thereof along with vendor
   declaring invoice in his return and paying GST within timeline prescribed for availing ITC
   by BHEL.

- In case GST credit is delayed/denied to BHEL due to non/delayed receipt of goods and/or tax invoice or expiry of timeline prescribed in GST law for availing such ITC, or any other reasons not attributable to BHEL, GST amount shall be recoverable from vendor along with interest levied / leviable on BHEL.

In case vendor delays declaring such invoice in his return and GST credit availed by BHEL is denied or reversed subsequently as per GST law, GST amount paid by BHEL towards such lTC reversal as per GST law shall be recoverable from vendor/contractor alongwith interest levied / leviable on BHEL.

For Foreign Supplier:

Payment shall be made in USD/INR only. 100% payment shall be made within 30-45 days of acceptance of received material at IVP Goindwal and receipt of following dispatch documents.

Documents Required (Complete in all respects)

a. Bill of Lading.
b. Packing list & Invoice
c. Country of origin Certificate
d. Test Certificates / Compliance Certificate
e. PBG for 10% value of contract. The validity of PBG should be for 18 months from acceptance of material at BHEL with additional 2 months for claim period. Vendor has to furnish a Performance Bank Guarantee from a consortium Bank at no extra cost in a proforma attached.
f. A Certificate that :

One copy of Tests / Compliances Certificate with non-negotiable documents, comprising of House Airway Bill, Invoice, Packing list, Country of origin Certificate, applicable drawings and catalogues, duly signed and stamped, have been sent separately to the port Consignee, purchaser

Attn: SDGM/ MM Department, BHEL, IVP Goindwal Sahib -143422 Distt. Tarn Taran, Punjab –India and to DGM / Finance, <<Same address>>

Above documents should include your Registration numbers such as GST no, PAN no, any other applicable statutory document etc.

BHEL releases payment through EFT mode ONLY. Necessary details may please be submitted by filling required format before release of payment.

It is mandatory to mention proper material codes in the invoices and separate invoices to be raised for different POs and Radiographed castings. It is necessary to send MTCs and RT films along with material, failing which material will not be accounted for and no receipt

will be given. Also RT charges are to be mentioned in same invoice in which material is being supplied. Above documents should include your Registration numbers such as GST no, PAN no. etc.

12. INSPECTION:

a. All required tests (Physical properties, Chemical properties, Heat Treatment, NDE, Visual, Surface finish etc.) as called in referred material standard/BHEL/TDC/drawing etc shall be carried out by vendor at no extra cost. **BHEL may decide to inspect itself/arrange third party at vendors' works itself as and when necessary with prior intimation to the vendor.** No additional charges shall be claimed for such inspections.

b. Third party inspection charges will be borne by BHEL. Moreover all required infrastructure (testing, tools etc) have to be arranged by supplier.

c. **Vendor will give inspection call sufficiently in advance considering the delivery period stipulated in the purchase order**.

d. Material Test Certificates (MTC), Inspection reports and Compliance/Guarantee Certificate are to be provided along with the supplies.

e. Latest applicable revisions of standards/procedures to be referred. International/National standards are to be arranged by vendor.

f. Any inspection carried out before supply by vendor/incoming stage at BHEL not withstanding, if any defect/non-conformity is noted during processing, the same shall be attended/replaced by vendor at no extra cost.

g. Necessary tooling including thread gauges etc have to be arranged by vendor. Only in exceptional cases, based on BHEL discretions item/nature, BHEL may consider request to provide gauges if available with BHEL. But in no case this shall be linked with delivery of material

h. Sample castings are to be identified by vendor in the delivery challan as "Sample" and the dimensional reports and RT reports are to be provided to BHEL along with supply. Also mention "Sample" on castings with white paint.

i. RT castings have to be mentioned "RT" on castings with white paint.

j. Material code as mentioned in PO is to be mentioned on all casting with paint.

k. BHEL representative from unit or CQ is authorized to carry out audits along with TPIA at vendor's works before clearing the items for dispatch.

13. RADIOGRAPHY:

Consistent radiography quality is to be ensured and to be maintained uniformly in bulk supply with adequate process and method controls. Since the castings required are of radiographic quality, BHEL reserves the right to conduct radiographic testing of sample pieces at its own arrangement and derive conclusion of soundness of casting supplied against the said lot/heat based on the results of such testing.

- Standard requirement of radiography of castings shall be as per TDC 412 Rev.26/ TDC:0:433 Rev00
- Any additional requirement shall be specifically called for in PO.
- BHEL intends to get delivery of castings along with radiographed sets as ordered. The claim of vendor for payment of supplies against any PO can be put on hold if the requisite no. of radiographed sets has not been delivered by then. BHEL shall reserve the right to select any sample from a lot offered and get it radiographed at vendor's works.

As per requirement of BHEL, vendor will be required to submit radiographic test reports as specified in the purchase orders released under the purview of the contract. BHEL will review and evaluate radiography films and RT reports and reserves the discretion to do so at the premises of the vendor.

Radiography procedure shall be as per ASME B 16.34, as mentioned in BHEL's TDC: 0:0412 Rev 26 Clause 7, S. No. 1. All the radiography films shall be dispatched to BHEL without delay either before the castings are being dispatched or along with the castings. Vendor shall undertake radiography on new development as per TDC 412 Rev.26/ /TDC:0:433 Rev00.

RT charges for Indian supplier: Fixed RT charges @ Ir_{192} : Rs 0.99 & Co_{60} : Rs 1.50 per sq. cm shall be paid on actual verified film area.

RT charges for Foreign supplier: Fixed RT charges @ Ir_{192} : Rs 0.99 & Co_{60} : Rs 1.50 per sq. cm shall be paid on actual verified film area. The above RT cost is landed cost to BHEL (FOR Goindwal). Loading as per clause 2e of tender will be done if vendor is not quoting FOR Goindwal basis.

14. REPAIR OF CASTINGS:

All castings shall be supplied free of defects like shrinkage, hot tears and process variable defects like sand inclusion, slag inclusion, gas entrapment etc. If any casting is found containing defects more than allowable limit, the same shall be upgraded at foundry itself before dispatch to BHEL with necessary documentation, enabling BHEL to make use of such castings immediately for production.

Castings at different stages of manufacturing are found to be defective shall be repaired at the defective area and the repaired area shall be accepted after performing requisite NDT at vendors cost for further acceptance. BHEL shall decide about the areas to be repaired in all such cases.

Castings that are found defective after receipt at BHEL, if necessary repair of the castings will be carried out by BHEL and repair charges @Rs. 24.20 per cc for duplex Stainless Steel grades shall be deducted from any of the running bills of the vendor.

In case of rejection of casting after machining/ assembly/testing due to defects more than allowable limits or major variation in dimensions etc. then the entire cost incurred till that stage shall be deducted from any of the running bills of the vendor.

15. REPLACEMENT OF REJECTIONS

If the material is rejected due to defective workmanship during inspection or at the time of actual use, within the guarantee period (i.e. as per clause 17), the rejected material shall be replaced by the supplier. Corresponding quantity shall be treated as unsupplied against respective purchase order till replacement is received at BHEL. If the material is found defective and rejected during use for which payment has already been released the rejected quantity shall be supplied free of cost by the vendor within a month of intimation of the rejection by BHEL.

Lifting of rejected material is under Supplier's scope. BHEL will inform related invoice, qty etc to supplier. Supplier is expected to give the plan to lift and advance intimation when visiting to lift the material. Material should be lifted within one month from date of intimation. After one month BHEL will not be responsible for rejected material. BHEL may decide to send the rejected material on To Pay basis to supplier. Any leniency/ unresponsiveness/delay on part of supplier may lead to appropriate action by BHEL. Any request to postpone in written may be considered but replacement should not be linked with lifting of material

Item/s pending in previous PO has to be billed in previous PO only. Otherwise BHEL will be free to adjust the supplies in previous PO. Any implication of GST etc will be on supplier's account. For this it is desirable to reconcile the pending PO statement every month/frequently. BHEL will give pending PO statement every month. This can also be viewed at Portal (http://vis.bheltry.co.in/mm/index.jsp).

16. LOADING:

Rate Contract will be entered into requisite no. of vendors to ensure that our requirement is met. For this, BHEL reserves the right to give counter offers to others than L1 vendor except highest bidder.

1. Tender quantity shall be divided in the proportion 60:15:25 (60% for L1, 15% for L2 and 25% for MSE's) in case the L1 vendor is not a MSE subject to following conditions:
I. L2 acceptance of L1 rates.

II. In tender, participating Micro and Small Enterprises quoting price within price band of L1+15 per cent shall also be offered 25% quantity of tender quantity at L1 price in a situation where L1 price is from someone other than a Micro and Small Enterprise. In case of more than one such Micro and Small Enterprise, the supply shall be shared equally. If there are more than one MSE in the price band of L1+ 15% to whom the offer has been sent and some of them reject the offer, then the remaining quantity shall be distributed equally to the MSEs accepting L1 prices.

III. 25% from the 25% quantity (i.e. 6.25% of the tender quantity) offered to the MSE's shall be reserved for MSE's owned by SC/STs. In event of failure of such Micro and Small Enterprises to participate in tender process or meet tender requirements and L1 price, 6.25 per cent quantity for Micro and Small Enterprises owned by SC/ST entrepreneurs shall be met from other Micro and Small Enterprises. 3% from within the 25% quantity offered to the MSE's will be offered to women owned MSE's. Failure to participate by any MSE owned by women; this 3% quantity shall be offered to other MSEs.

IV. In case any MSE vendor does not accept the counter offer, the above mentioned 25% quantity shall be offered to L2.

V. If there is no MSE in the Price band of L1+15% then the 25% quantity shall be offered to L2 vendor.

VI. If other suppliers (other than L1) are not under MSE then 60% qty shall be given to L1 and 40% qty. shall be offered to L2 supplier.

2. In case if the L1 vendor is MSE then quantity shall be provided as 60 % for L1, 30.75% for L2 and 6.25% tender quantity shall be offered to the MSEs owned by SC/ST's in the price band of L1+15%. In event of failure of such Micro and Small Enterprises to participate in tender process the quantity shall be offered to L2. 3% quantity shall be offered to women owned MSE's. Failure to participate by any MSE owned by women; this 3% quantity shall be met from L2 vendor.

3. In case L1 vendor is MSE owned by SC/ST Women entrepreneur then quantity shall be provided as 60 % to L1 and 40% to L2.

All above offered quantities are subject to acceptance of L1 rates.

In case of non- acceptance of counter offer by any vendor after above applicable provisions the whole quantity would be offered to L1 vendor. All above mentioned preferences shall be given to MSEs and SC/STs only on the submission of documentary evidence in the Techno-Commercial part only.

Above indicated criteria is liable to be monitored/controlled/regulated by BHEL from the first ordering itself/subsequent ordering based on commitment given by L1 vendor/other vendors, past performance, quality of castings, availability of patterns etc.

Once the rate contract is in place with various vendors based on acceptance of counter offer, while placing regular Purchase orders, BHEL will place orders for required quantity based on pattern availability, pattern development time, BHEL delivery requirement, pending POs at any time with vendor (including previous RC POs) and vendor's monthly commitment, capability, delivery records and quality. Performance of vendors shall be monitored as per the performance monitoring system attached. Though BHEL requires and intend to procure castings in sets for a particular size, but BHEL reserve the right to release POs of casting components in any proportion to meet its requirement. The vendor has to mention his monthly commitment in MT.

17. GUARANTEE:

Vendor shall give a guarantee of 18 months from the date of dispatch or 12 months from date of receipt, whichever is earlier (for undertaking repairs/replacement of any defect observed during machining/ assembly/ hydraulic testing or subsequent processing not withstanding the previous acceptance. Entire cost of such castings will be deducted from any of the running bills/PBG). In case of non-acceptance of this term bid will be rejected.

18. LIQUIDATED DAMAGES:

'Time is the essence of the contract'. As such, delivery of goods specified in the Purchase Orders released under the scope this contract shall be made within the time limit prescribed therein. Liquidated damages clause will be applicable for delayed supplies @ 0.5% per week or part thereof subject to a maximum of 10%.

If any vendor does not accept LD ½% of the supply for each week of delay subject to a maximum of 5%, their offer is likely to be rejected by BHEL and the price bid shall not be opened. Bidders accepting for 10% LD shall not be loaded on account of LD. However bidders who offer any other % LD [between 5% to 10%] shall be loaded @ % deviation from 10% and their accepted %.e.g. If a bidder accepts for a max of 7% LD only, their offer would be loaded @ 3% (10 – 7 = 3).

BHEL reserves the right to receive or not receive material after the due date of PO.

19. RISK PURCHASE:

BHEL shall be entitled to terminate the contract/pending POs at any stage and to purchase elsewhere at the risk and cost of the vendor, either the whole of the goods or any part thereof which the supplier has failed to deliver or dispatch within the time stipulated as aforesaid. Vendor shall be liable for the losses, which BHEL may sustain by way of such risk purchase.

20. SUB-CONTRACT:

The purchase order or any part thereof shall not be sub-contracted, assigned or otherwise transferred without previously obtaining the BHEL's consent in writing
s

21. FORCE MAJEURE:

If at any time during the continuance of the contract, the performance in which or in any part by either party of any obligations under the contract are prevented or delayed by reason of any war, hostilities, acts of public enemy, civil commotion, sabotage, fires, explosions, epidemics, quarantine restrictions, or acts of God (hereinafter referred to "an events" then provided the notice of happening of any such event is given by either party to the other within 21 days of the occurrence thereof, neither party shall by reason of such event be entitled to terminate the contract nor shall either party have any claim for damages against the other in respect of such non-performance and delay in performance and delivery under the contract shall be resumed as soon as practicable after such event has come to an end or ceased to exist. If the performance in whole or part of any obligation under the contract is prevented or delayed by reason of any such event, claims of extension of time shall be granted for periods considered reasonable by BHEL subject to prior notification by the vendor to BHEL of the particulars of the event and supply to BHEL, if required, of any supporting evidence. Any waiver of time in respect of partial installment shall not be deemed a waiver of time in respect of remaining deliveries.

22. DISPUTES:

In the event of any dispute and/or difference arising between the Vendor and BHEL as to interpretation and/or execution of the contract and/or the respective rights and liabilities of the parties, such disputes and/or differences shall be referred to the sole arbitrator nominated by BHEL. The provisions of the Indian Arbitration Act and the rules there under shall apply to such arbitration. The award passed by the arbitrator shall be final and conclusively binding on all the parties.

23. JURISDICTION:

The court of the place from where the purchase order is issued during the contractual period shall alone have jurisdiction to decide any dispute arising out of or in connection with the purchase order.

24. GENERAL:

a) BHEL will not be bound by any power of attorney granted by the vendors or by changes in the composition of the firm made subsequent to the execution of the

contract. They may, however, recognize such power of attorney and changes after obtaining proper legal advice, the cost of which will be chargeable to the vendor concerned.

b) BHEL reserves the right to extend the due date of opening, which shall be informed. Validity of offer shall be deemed to be revised accordingly.
c) BHEL reserves the right to accept or reject any part or whole of the tender of a bidder by assigning a valid reason thereof. BHEL reserves the right to cancel the tender without assigning any reason thereof and without any obligation before any commitment.
d) If possible, please submit soft copy of price quotation [copied on a blank CD of standard make] put in the sealed offer.
e) Acceptance of all terms and conditions, in the form of signed copy of T&C or confirmation separately written, shall be submitted along with quotation. If nothing is mentioned, it shall be concluded that terms and conditions are acceptable.
f) BHEL may increase/decrease item/s based on BHEL requirement before price bid opening. Suitable price implication may be asked from suppliers.
g) BHEL may drop item/items from tender at any stage of tender before placing PO. BHEL may also delete PO with consent with supplier within delivery date of PO.
h) After releasing PO, it is assumed that supplier has accepted PO if we do not receive acknowledgement from supplier within 5 days of date of PO.
i) Any term is special tender terms and conditions will supersede the GCC.
j) BHEL reserves the right to negotiate with L1 bidder/s of Reverse auction/sealed bid.
k) If BHEL receives extra quantity (max 10%) against order from a vendor, then this quantity will be accepted in supplied PO provided rate/Kg in that PO is less than current rate/Kg provided BHEL has requirement of that item.
l) The Drawings and Technical documents given in this enquiry are the sole property of BHEL. It must not be used directly or indirectly in any way detrimental to the interest of the company.
m) If vendor has mentioned **FOR Punjab** in his quotation, then it will be considered as FOR Goindwal Sahib (Pb.).
n) **Documents submitted with the offer shall be signed and stamped in each page by authorized representative of the bidder.**

For Foreign Supplier only:

a. All documents are to be in “ENGLISH LANGUAGE” only.
b. Contract No. and Import License No. are to be inducted in all documents
c. Invoice should show the description of the goods and the unit rate of each item as in the purchase contract.
d. Packing list must indicate case identification, case dimension, and case contents, gross and net weight.
e. Against each item in the invoice and packing list, the serial number of the corresponding item in the purchase contract or as per order acknowledgement should be indicated.
f. Demurrage charges due to delayed presentation of the original shipping documents for the reason not attributable to the buyer should be borne by the seller
g. All documents should be submitted in triplicate

25. WORDS AND FIGURES:

a. If, in the price structure quoted for the required goods/ services/ works, there is discrepancy between the unit price and the total price (which is obtained by multiplying the unit price by the quantity}, the unit price shall prevail and the total price corrected accordingly, unless in the opinion of the purchaser there is an obvious misplacement of the decimal point in the unit price, in which case the total price as quoted shall govern and the unit price corrected accordingly.
b. If there is an error in a total corresponding to the addition or subtraction of subtotals, the subtotals shall prevail and the total shall be corrected; and
c. If there is a discrepancy between words and figures, the amount in words shall prevail, unless the amount expressed in words is related to an arithmetic error, in which case the amount in figures shall prevail subject of (a) and (b) above.
d. If there is such discrepancy in an offer, the same shall be conveyed to the bidder with target date upto which the bidder has to send his acceptance on the above lines and if the bidder does not agree to the decision of the purchaser, the bid is liable to be ignored.
e. Bids should be free from correction, overwriting, using corrective fluid, etc. Any interlineation, cutting, erasure or overwriting shall be valid only if they are attested under full signature(s) of person(s) signing the bid else shall be liable for rejection.
f. All overwriting/cutting, etc will be numbered by bid opening officials and announced during bid opening.

26. PREFERENCES FOR MSE's :

Preferences as mentioned in "Public Procurement Policy for Micro and Small Enterprises (MSEs) Order, 2012" shall be given to Micro and Small enterprises.

Main points which are mentioned in the above order are as follows:

- 25% Procurement of the tender value shall be made from MSE (Micro, Small Enterprises) firms.
- 6.25% from the above 25% procurement quantity shall be procured from MSE's owned by SC /ST's. Failure to participate by any MSE owned by SC/ST's this 6.25% quantity shall be procured from other MSEs.
- 3% from within the 25% quantity offered to the MSE'sshall be reserved for women owned MSE's. Failure to participate by any MSE owned by SC/ST's this 3% quantity shall be procured from other MSEs.
- EMD shall be exempted for MSE's. All these benefits are subject to production of all statutory documents
- In tender, participating Micro and Small Enterprises quoting price within price band of L1+15 per cent shall also be allowed to supply a portion of requirement by bringing down their price to L1 price in a situation where L1 price is from someone other than a Micro and Small Enterprise and such Micro and Small Enterprise shall be allowed to supply up to 20 per cent of total tendered value. In case of more than one such Micro and Small Enterprise, the supply shall be shared proportionately (to tendered quantity).

"MSE suppliers can avail the intended benefits only if they submit along with the offer, attested copies of either EM II certificate having deemed validity (five years from the

date of issue of acknowledgement in EM II) or valid NSIC certificate or EM II certificate along with attested copy of a CA certificate (Format enclosed at Annexure -1 where deemed validity of EM II certificate of five years has expired) applicable for the relevant financial year (latest audited). Date to be reckoned for determining the deemed validity will be the date of bid opening (Part 1 in case of two part bid). Non submission of such documents will lead to consideration of their bid at par with other bidders. No benefit shall be applicable for this enquiry if any deficiency in the above required documents is not submitted before price bid opening. If the tender is to be submitted through e-procurement portal, then the above required documents are to be uploaded on the portal. Documents should be notarized or attested by a Gazetted officer."

27. BANNED FIRMS:

The offers of the bidders who are on the banned list as also the offer of the bidders, who engage the services of the banned firms, shall be rejected. The list of banned firms is available on BHEL website www.bhel.com.

28. FRAUD PREVENTION POLICY:

The Bidder along with its associate/collaborators/sub-contractors/sub-vendors/consultants/service providers shall strictly adhere to BHEL Fraud Prevention Policy displayed on BHEL website http://www.bhel.com and shall immediately bring to the notice of BHEL management about any fraud or suspected fraud as soon as it comes to their notice.

29. <u>CLARIFICATIONS:</u>

The correspondence exchanged against the tender from both tenderer and BHEL through email & through e-procumbent portal are considered as valid document legally though it is not signed. It is treated as valid confirmations made on behalf of the respective company and very much comes under the legal ambit of the business transaction and hence it is binding on both the parties to the business. Any transaction pertaining to the tender from both the parties of business done round the clock irrespective of the office or business hours of the companies, are valid legally and binding on both the parties. This applies to the extent only in such cases where deadline time for transaction is not specifically declared by either or both the patties to the business. In case Letter of Intent (LOI) is issued through email, the PC generated time and date of mail shall be construed as the official time and date of release of LOI. In as much as this date is within the last date of validity given by the bidder the LOI is said to have been issued within the validity period and shall be bidding on both the parties to the business.

G31. REVERSE AUCTION:

BHEL reserves the right to go for Reverse Auction (RA) (Guidelines as available on www.bhel.com) instead of opening the sealed envelope price bid, submitted by the bidder. This will be decided after techno-commercial evaluation. Bidders to give their acceptance with the offer for participation in RA. Non-acceptance to participate in RA may result in non-consideration of their bids, in case BHEL decides to go for RA.

Those bidders who have given their acceptance to participate in Reverse Auction will have to necessarily submit 'Process compliance form' (to the designated service provider) as well as 'Online sealed bid' in the Reverse Auction. Non-submission of 'Process compliance form' or 'Online sealed bid' by the agreed bidder(s) will be considered as tampering of the tender process and will invite action by BHEL as per extant guidelines for suspension of business dealings with suppliers/ contractors (as available on www.bhel.com).

The bidders have to necessarily submit online sealed bid less than or equal to their envelope sealed price bid already submitted to BHEL along with the offer. The envelope sealed price bid of successful L1 bidder in RA, if conducted, shall also be opened after RA and the order will be placed on lower of the two bids (RA closing price & envelope sealed price) thus obtained. The bidder having submitted this offer specifically agrees to this condition and undertakes to execute the contract on thus awarded rates.
If it is found that L1 bidder has quoted higher in online sealed bid in comparison to envelope sealed bid for any item(s), the bidder will be issued a warning letter to this effect. However, if the same bidder again defaults on this count in any subsequent tender in the unit, it will be considered as fraud and will invite action by BHEL as per extant guidelines for suspension of business dealings with suppliers/ contractors (as available on www.bhel.com).

G32. SUSPENSION OF BUSINESS DEALINGS WITH DEFAULTERS

The offers of the bidders who are under suspension as also the offers of the bidders, who engage the services of the banned firms, shall be rejected. The list of banned firms is available on BHEL web site **www.bhel.com.**

1.0 Integrity commitment, performance of the contract and punitive action thereof:

1.1. Commitment by BHEL:
BHEL commits to take all measures necessary to prevent corruption in connection with the tender process and execution of the contract. BHEL will during the tender process treat all Bidder(s) in a transparent and fair manner, and with equity.

1.2. Commitment by Bidder/ Supplier/ Contractor:

1.2.1. The bidder/ supplier/ contractor commit to take all measures to prevent corruption and will not directly or indirectly influence any decision or benefit which he is not legally entitled to nor will act or omit in any manner which tantamount to an offence punishable under any provision of the Indian Penal Code, 1860 or any other law in force in India.

1.2.2. The bidder/ supplier/ contractor will, when presenting his bid, disclose any and all payments he has made, and is committed to or intends to make to agents, brokers or any other intermediaries in connection with the award of the contract and shall adhere to relevant guidelines issued from time to time by Govt. of India/ BHEL.
1.2.3. The bidder/ supplier/ contractor will perform/ execute the contract as per the contract terms & conditions and will not default without any reasonable cause, which causes loss of business/ money/ reputation, to BHEL.

If any bidder/ supplier/ contractor during pre-tendering/ tendering/ post tendering/ award/ execution/ post-execution stage indulges in mal-practices, cheating, bribery, fraud or and other misconduct or formation of cartel so as to influence the bidding process or influence the price or acts or omits in any manner which tantamount to an offence punishable under any provision of the Indian Penal Code, 1860 or any other law in force in India, then, action may be taken against such bidder/ supplier/ contractor as per extant guidelines of the company available on www. bhel.com and/or under applicable legal provisions

G33. DISCLAIMER CLAUSE: (Only for E procurement)

Neither the Organization (Bharat Heavy Electricals Ltd.) nor the service provider (M/s e Procurement Technologies limited) is responsible for any failure of submission of bids due to failure of internet or other connectivity problems or reasons thereof.

G34. LOI (Letter of Intent)

BHEL may issue LOI prior to the PO for any reason whatsoever. The LOI in such cases is to be treated as PO for all practical purposes and all the Terms & Conditions of the tender shall be applicable from the date of issue of LOI.

G35. PREFERENCE TO MAKE IN INDIA

For the procurement, Public Procurement (Preference to make in India), order 2017 dated 15.06.2017 & 28.05.2018 and subsequent Orders issued by respective Nodal Ministry shall be applicable even if issued after issue of this NIT before finalization of contract/PO/WO against this NIT

Check List for Tender

Necessary Document to be submitted in Part-I:

- Submission of all the Pre-Qualification requirements
- Acceptance of all techno-commercial terms and conditions. If nothing is mentioned for any terms and condition, it shall be concluded that the same is accepted.
- Monthly supply commitment in MT
- Annexure-A duly filled
- SC/ST certificate and MSME certificate if applicable

Document to be submitted in Part-II:

Prices per kg mentioned in figures as well as in words. **No other condition shall be mentioned.**

Procedure to finalise the rate contract:

- Receipts of quotations (Part-I & Part-II): **By 1400 Hrs on due date**
- Opening of part-I: **By 1530 Hrs on due date**
- Evaluation of part-I of vendors and declaration of price bids opening or reverse auction : **Date shall be announced and informed to all bidders.**

Note: Kindly ensure that each page of document given with quotation is signed by authorized representative of company.

Tender for CF3M castings 1920-048E dated 11.07.2019

Annexure-A

Sl. No.	**Desciption**	**Vendor to mention**
1	Attach list of patterns	**Kindly attach**
2	Maximim pattern development time for new item	
3	what is the Maximum weight of single piece casting that can be delivered by vendor (In Kg)	
4	Minimum time after which supply will start after receipt of regular POs for items in which pattern is available.	
5	Typical limitation in some pattern/group of patterns collectively, Please mention the size and quantity per month which can be delivered.	
6	**Monthly commitment for IVP Goindwal (MT)**	

Signature of vendor with stamp

DRAWING NO. 2-V-0000-14171R

ALL DIMENSIONS ARE IN MILLIMETRES. FOR TOLERANCES OF UNTOLERANCED DIMENSIONS DURING MANUFACTURE REFER RELEVANT QCP / QP

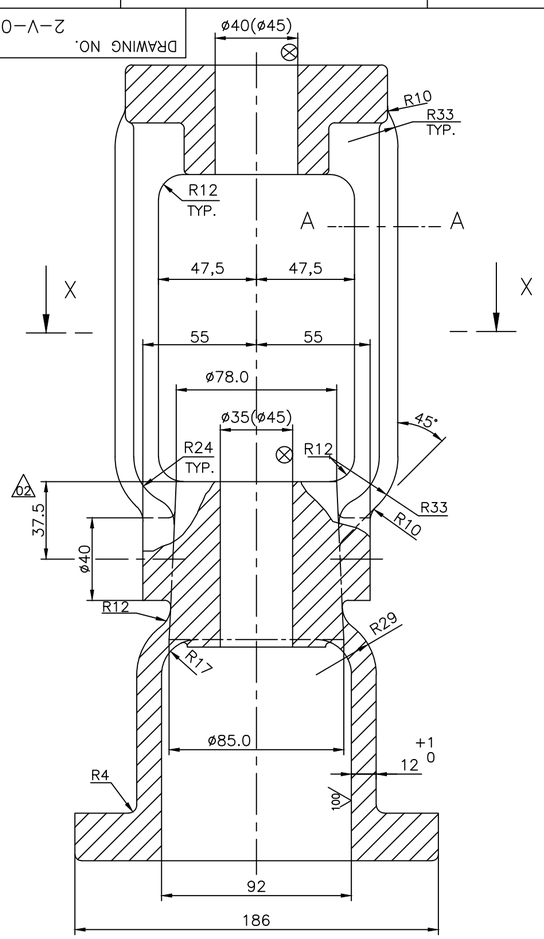

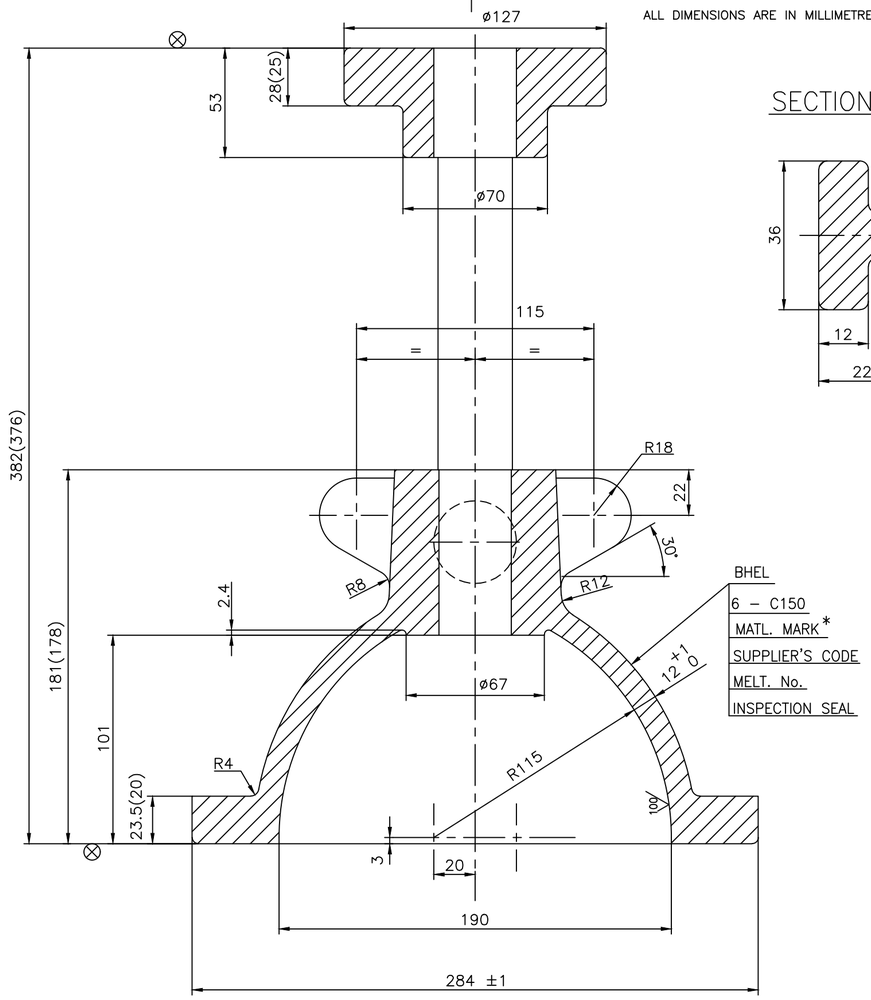

SECTION AA

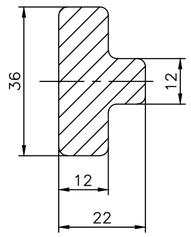

100

NOTES–

01. NECESSARY MACHINING ALLOWANCES HAVE BEEN ADDED ON ALL MACHINABLE SURFACES.
02. PERMISSIBLE DEVIATIONS OF NON TOLERANCED CASTING DIMENSIONS REFER APPLICABLE TDC
03. FINISH MACHINED DIMENSIONS ARE INDICATED WITHIN BRACKETS FOR INFORMATION ONLY.
04. LETTERS– BHEL,SIZE,MATL.& SUPPLIERS CODE ARE TO BE CAST IN THE INDICATED ZONE.
05. CASTING SHALL COMPLY WITH THE REQUIREMENTS OF APPLICABLE TDC
06. UNSPECIFIED CASTING RADII = R3 TO R5
07. HEIGHT OF CASTING LETTERS = 15 mm
08. ⊗ INDICATES SURFACE TO BE MACHINED.
09. 100 INDICATED CASTING SURFACES SHALL BE OF HIGH QUALITY WITHOUT SURFACE UNEVENNESS.
10. HEAT TREATMENT FOR ASTM 995 CD3MN AS PER ASTM STANDARD ASTM–995 TABLE 1 (HEAT TO 2050°F [1120°C] MINIMUM FOR SUFFICIENT TIME TO HEAT CASTING UNIFORMLY TO TEMPERATURE AND WATER QUENCH, OR THE CASTING MAY BE FURNACE COOLED TO 1850°F [1010°C] MINIMUM, HOLD FOR 15 MIN MINIMUM AND THEN WATER QUENCH. A RAPID COOL BY OTHER MEANS MAY BE EMPLOYED IN LIEU OF WATER QUENCH.)
11. # MARKED ITEMS IGC TEST SHALL BE CONDUCTED

BHEL
6 – C150
MATL. MARK *
SUPPLIER'S CODE
MELT. No.
INSPECTION SEAL

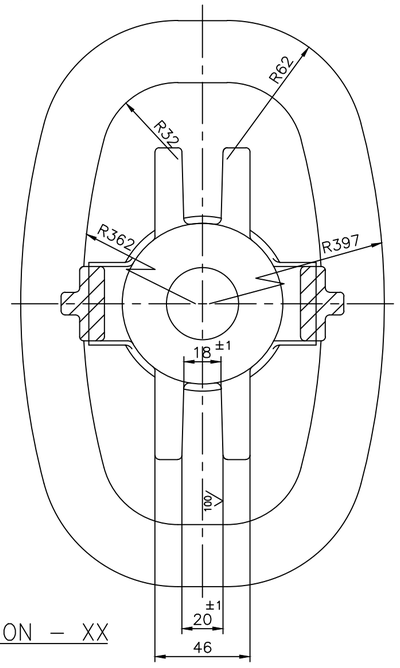

SECTION – XX

MATL. MARK *	SL No.	DESCRIPTION	MATL CODE	MATL SPECN	HEAT TREATMENT	SCRAP SORT	NET WT (kg)	GROSS WT (kg)	DRAWING No / COMPONENT CODE	ITEM No
CF3M	06	CASTING	–	A351 CF3M CERTIFY	SH	–	17.3	–	2.V.NP76.14171R / 92 203 850 0000	007
CF8	#05	CASTING	–	A351 CF8 CERTIFY	SH	–	17.3	–	2.V.U937.14171R / 92 203 750 0000	007
CD3MN	04	CASTING	–	A995 Gr.CD3MN CERTIFY	REFER NOTE	–	17.3	–	2.V.NP33.14171R/1 / 92 203 484 0000	007
CF8	03	CASTING	–	A351 CF8 CERTIFY	SH	–	17.3	–	2.V.ND72.14171R / 92 203 341 0000	007
CF8M	02	CASTING	–	A351 CF8M CERTIFY	SH	–	17.3	–	2.V.ND10.14171R/1 / 92 203 161 0000	007
WCB	01	CASTING	–	A216 WCB CERTIFY	NORMALISED	–	17.3	–	2.V.NC64.14171R/1 / 92 201 700 0000	007

REV	DATE	ALTERED	
07	30.05.19	R.P.SINGH	CHD & APPD SSK & KRS
	SL. No. 06 INCLUDED		
06	12.12.18	R.P.SINGH	CHD & APPD SSK & KRS
	SL. No. 05 INCLUDED NOTES No. 11 INLCUDED		
05	25.01.18	R.P.SINGH	CHD & APPD SSK & KRS
	FOR SL.NO.04 MATERIAL SPECIFICATION CHANGED TO CD3MN FROM 6A NOTE SL.NO.10 HEAT TREATMENT PROCESS REVISED		
04	14.06.17	T.SANGEETHA	CHD & APPD SSK & KRS
	SL.No. 04 INCLUDED		
03	27.12.14	MARIMUTHU	CHD & APPD MS & SSK
	SL.No. 03 INCLUDED		
02	21.08.14	MARIMUTHU	CHD & APPD MS & SSK
	DIMENSION 37.5 INCLUDED. DCP: 801794		
01	20.06.13	M.S	CHD & APPD SSK & KRS
	SL.No. 02 INCLUDED		

ZONE

CAUTION: The information on this document is the property of BHARAT HEAVY ELECTRICALS LTD. It must not be used directly or indirectly in any way detrimental to the interest of the company.

TYPE OF PRODUCT
OR NAME OF
CUSTOMER/PROJECT

BHARAT HEAVY ELECTRICALS LTD.,
UNIT: HIGH PRESSURE BOILER PLANT.
TIRUCHIRAPALLI -620014.
365–120

	NAME	SIGN	DATE	NO.OF VAR.
DRN	M.SRINIVASAN		03.09.07	
CHD	P.BOOMINATHAN		03.09.07	
APPD	M.RAJAKUMAR		03.09.07	

DEPT VL
CODE 320
SCALE NTS
WEIGHT (KG). REF. TABLE
REFERENCE INFORMATIONS
CAD:C214171R
NO. OF ITEMS

TITLE
YOKE CUM BONNET
(6–C150)

CARD CODE U 01

DRAWING NO. 2–V–0000–14171R

REV 07

Size A2

DRAWING NO. 2-V-0000-05925R

ALL DIMENSIONS ARE IN MILLIMETRES. FOR TOLERANCES OF UNTOLERANCED DIMENSIONS DURING MANUFACTURE REFER RELEVANT QCP / QP

100

SECTION-AA

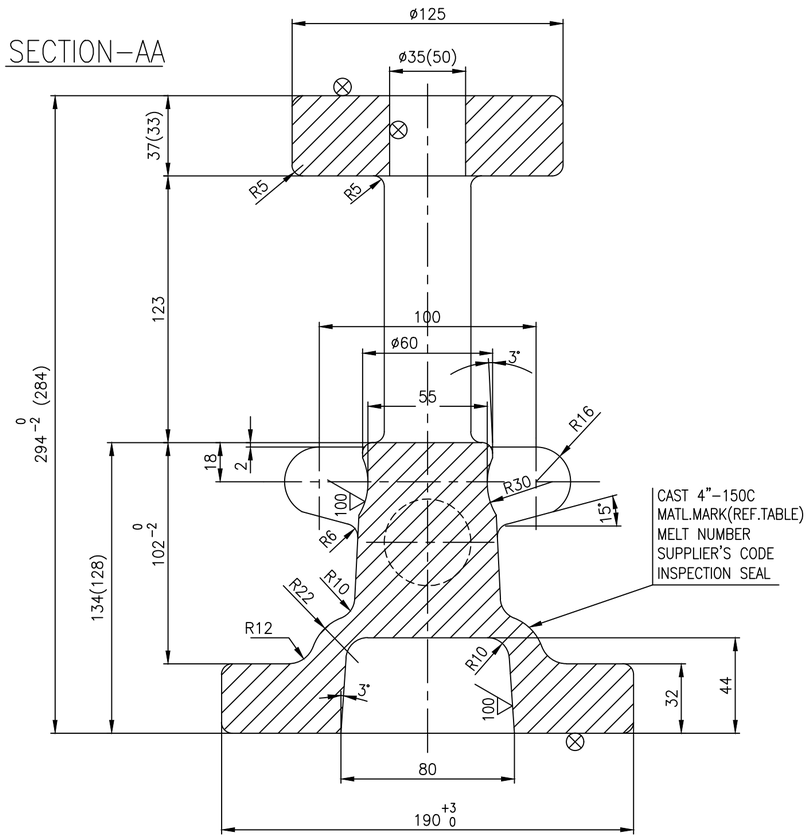

SECTION-BB

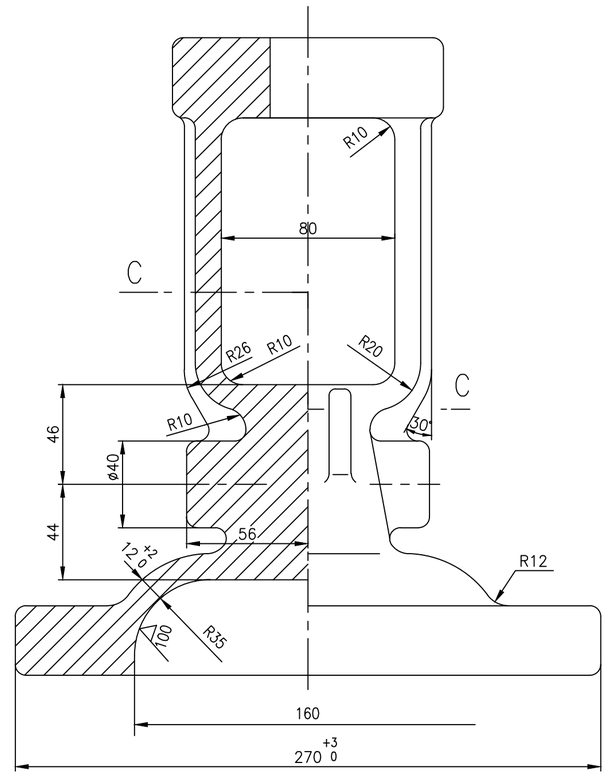

SECTION-CC

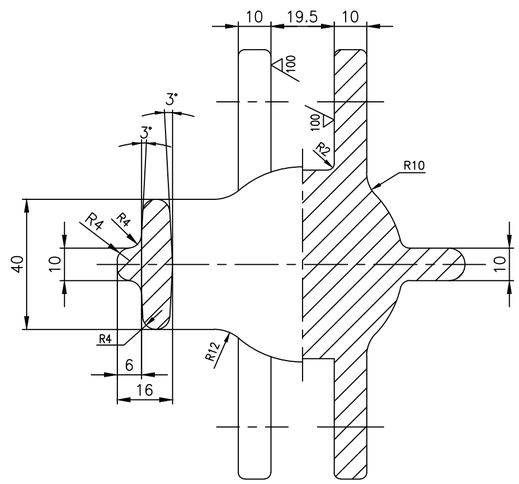

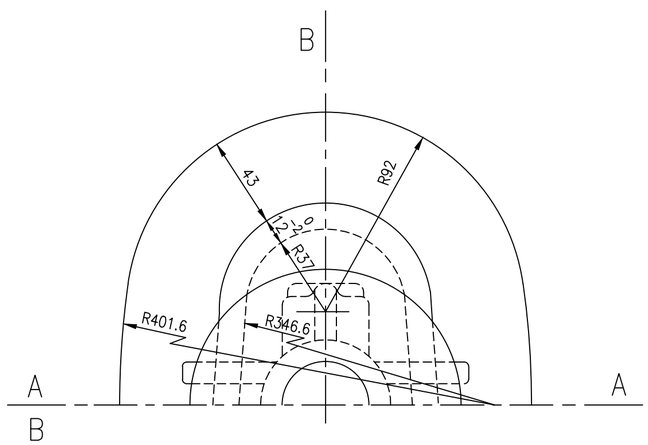

NOTES:

1. NECESSARY MACHINING ALLOWANCES HAVE BEEN ADDED ON ALL MACHINABLE SURFACES.
2. FINISHED MACHINED DEIMENSIONS ARE INDICATED WITHIN BRACKETS FOR INFORMATION.
3. 100 CASTING SURFACES MUST BE HIGH QUALITY WITHOUT SURFACE UNEVENNESS.
4. UNSPECIFIED CASTING RADII 3-5 MM
5. HIGHT OF CASTING LETTERS 12MM
6. ⊗ SURFACES TO BE MACHINED
7. CASTING SHALL COMPLY WITH THE REQUIREMENTS OF APPLICABLE QUALITY PROCEDURE.
8. HEAT TREATMENT FOR SA995 CD3MN AS PER ASME STANDARD SA-995 TABLE 1
   (HEAT TO 2050°F [1120°C] MINIMUM FOR SUFFICIENT TIME TO HEAT CASTING UNIFORMLY TO TEMPERATURE AND WATER QUENCH, OR THE CASTING MAY BE FURNACE COOLED TO 1850°F [1010°C] MINIMUM, HOLD FOR 15 MIN MINIMUM AND THEN WATER QUENCH. A RAPID COOL BY OTHER MEANS MAY BE EMPLOYED IN LIEU OF WATER QUENCH.)
9. # MARKED ITEMS ARE IGC TEST SHALL BE CONDUCTED

No OFF	DESCRIPTION	MATL CODE	MATL SPECN	HEAT TREATMENT	SCRAP SORT	NET WT (kg)	GROSS WT (kg)	DRAWING No	ITEM No
10	CF3M	92 203 851	A351 CF3M CERTIFY	SH	46	--	11.2	2.V.NK02.05925R/00	05
#09	CF8	92 203 756	A351 CF8 CERTIFY	SH	46	--	11.2	2.V.U936.05925R/00	05
08	CD3MN	92 203 580	A995 CD3MN CERTIFY	REFER NOTE	46	--	11.2	2.V.NK32.05925R/00	05
07	LCB	92 200 895	A352 LCB CERTIFY	NORMALISED	10	--	11.2	2.V.M769.05925R/01	05
06	CF8M	92 200 597	A351 CF8M CERTIFY	SH	46	--	11.2	2.V.N438.05925R/01	05
05	CF8	92 200 596	A351 CF8 CERTIFY	SH	46	--	11.2	2.V.N285.05925R/01	05
04	WC9	92 200 595	A217 WC9 CERTIFY	N & T	20	--	11.2	2.V.N378.05925R/01	05
03	WC6	92 200 594	A217 WC6 CERTIFY	N & T	20	--	11.2	2.V.N377.05925R/01	05
02	WCC	92 200 593	A216 WCC CERTIFY	NORMALISED	10	--	11.2	2.V.N376.05925R/01	05
01	WCB	92 200 355	A216 WCB CERTIFY	NORMALISED	10	--	11.2	2.V.N317.05925R/02	05

REV	DATE	ALTERED	R.P.SINGH
06	31.05.19	CHD & APPD	SSK & KRS
		SL. No. 10 INCLUDED	

REV	DATE	ALTERED	R.P.SINGH
05	03.12.18	CHD & APPD	SSK & KRS
ZONE		SL.No.08 & 09 INCLUDED NOTE No. 8 & 9 INCLUDED	

CAUTION: The information on this document is the property of BHARAT HEAVY ELECTRICALS LTD. It must not be used directly or indirectly in any way detrimental to the interest of the company.

TYPE OF PRODUCT OR NAME OF CUSTOMER/PROJECT: CS

DWG. REDRAWN WITH REV. 05 ON 03.12.18

BHARAT HEAVY ELECTRICALS LTD.,
UNIT: HIGH PRESSURE BOILER PLANT.
TIRUCHIRAPALLI -620014.
365-120

	NAME	SIGN	DATE	NO.OF VAR.
DRN	R.T.GNANAM		17.06.97	
CHD	N.DHANAPAL		17.06.97	
APPD	A.V.NATHAN		17.06.97	

DEPT VL
CODE 320
SCALE NTS
WEIGHT (KG). –
REFERENCE INFORMATIONS: CAD REF: C205925R
NO. OF ITEMS

TITLE: YOKE COVER (4"-150C SG GV)
CARD CODE: U 01
DRAWING NO. 2-V-0000-05925R
REV 06

Size A2

DRAWING NO. 2-V-0000-06131R

ALL DIMENSIONS ARE IN MILLIMETRES. FOR TOLERANCES OF UNTOLERANCED DIMENSIONS DURING MANUFACTURE REFER RELEVANT QCP / QP

100

SECTION-AA

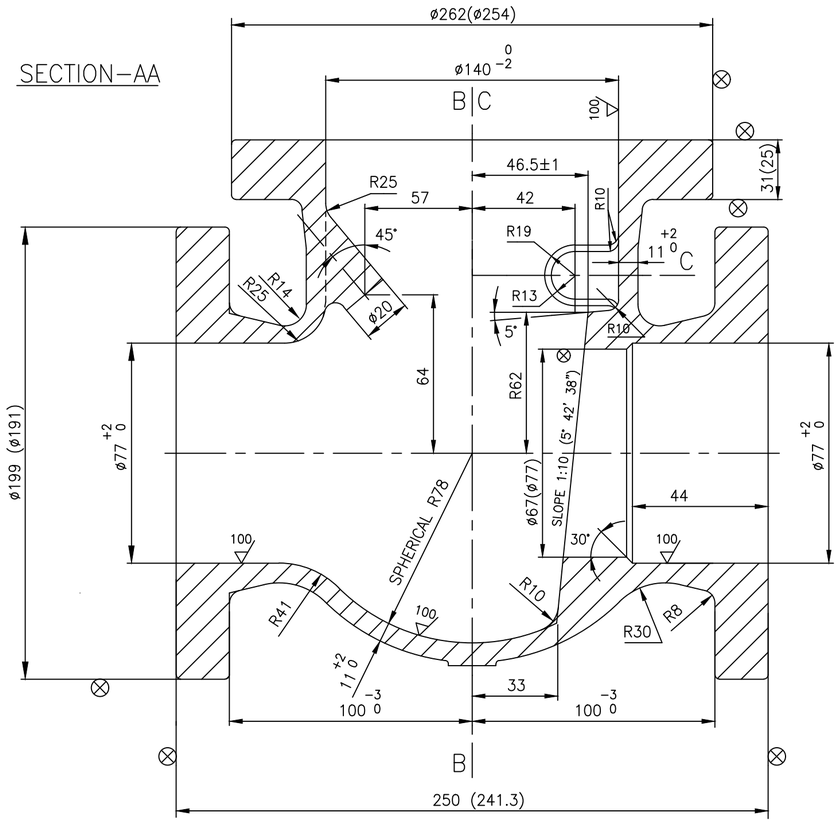

SECTION-BB

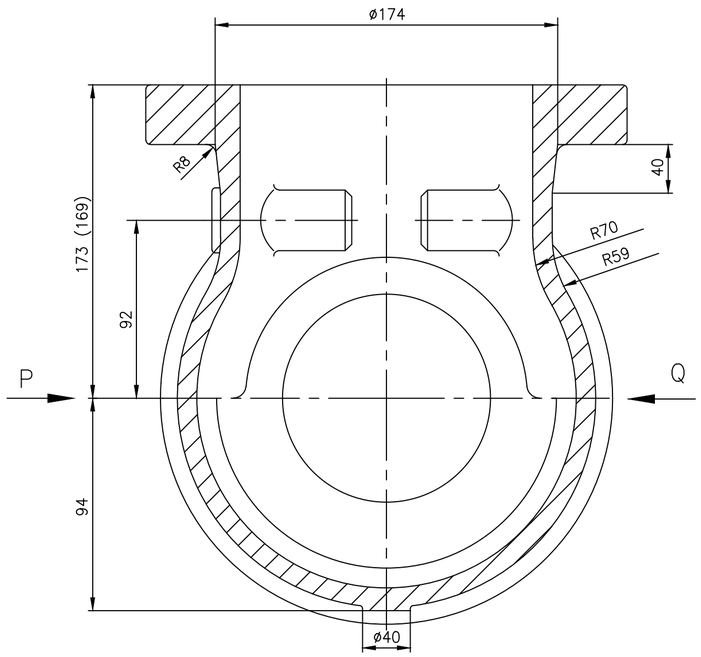

VIEW-Q

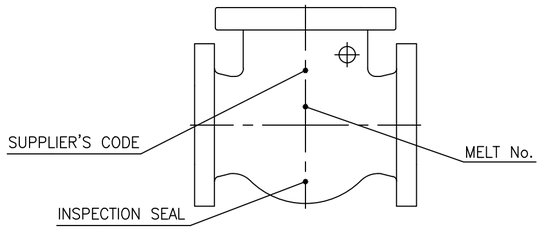

VIEW-P

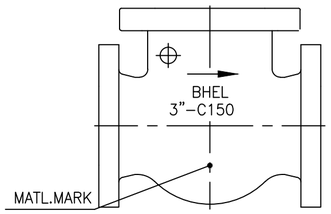

SECTION-CC

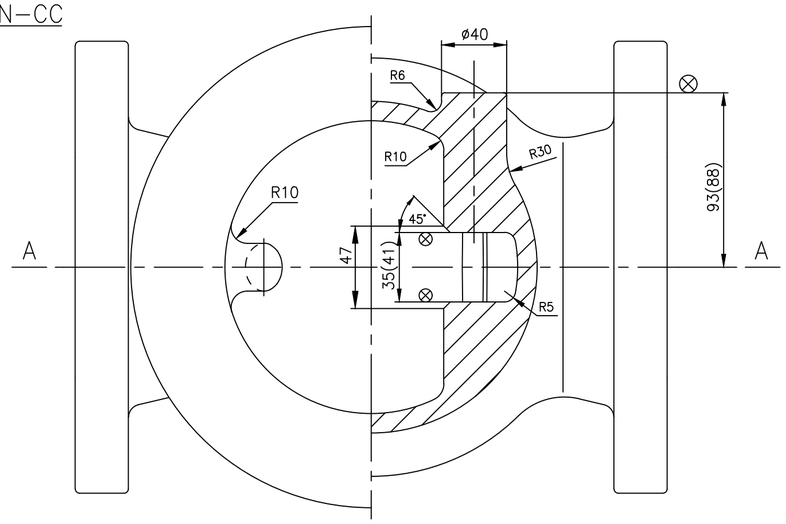

NOTES:-

1. NECESSARY MACHINING ALLOWANCES HAVE BEEN ADDED ON ALL MACHINABLE SURFACES
2. PERMISIBLE DIMENSIONAL DEVIATIONS OF NON TOLERANCED CASTING DIMENSIONS – REFER LATEST APPLICABLE TDC
3. FINISHED MACHINED DIMENSIONS ARE INDICATED WITHIN BRACKETS FOR INFORMATION ONLY.
4. 100 CASTING SURFACES MUST BE HIGH QUALITY WITHOUT SURFACE UNEVENNESS
5. ALL DETAILS SHOWN IN VIEWS P & Q , EXCEPT MELT No. AND INSPECTION SEAL , ARE TO BE CAST.
6. CASTING SHALL COMPLY WITH THE REQUIREMENTS OF LATEST APPLICABLE TDC
7. UNSPECIFIED CASTING RADII 3 – 7 MM
8. HEIGHT OF CASTING LETTERS 20MM
9. ⊗ SURFACES TO BE MACHINED
10. THIS DRAWING IS DIMENSIONALLY IDENTICAL AND SIMILAR IN ALL RESPECTS TO THE DRWAING 1-V-5157-02777R EXCEPT MATERIAL SPECIFICATION.
11. # MARKED ITEMS IGC TEST SHALL BE CONDUCTED.

SL. No.	DESCRIPTION	MATL CODE	MATL SPECN	HEAT TREATMENT	SCRAP SORT	NET WT (kg)	GROSS WT (kg)	DRAWING No / COMPONENT CODE	ITEM No
03	BODY	92 203 852	A351 CF3M (ATTEST)	SH	46	32	–	2.V.Z120.06131R	01
#02	BODY	92 203 540	A351 CF8 (ATTEST)	SH	46	32	–	2.V.U633.06131R	01
01	BODY	92 200 539	A351 CF8 (ATTEST)	SH	46	32	–	2.V.5199.06131R	01

REV	DATE	ALTERED	R.P.SINGH
02	31.05.19	CHD & APPD	SSK & KRS
		SL. No. 03 INCLUDED	

REV	DATE	ALTERED	R.P.SINGH
01	05.05.18	CHD & APPD	SSK & KRS
ZONE	SL. NO. 2 INCLUDED		

CAUTION: The information on this document is the property of BHARAT HEAVY ELECTRICALS LTD. It must not be used directly or indirectly in any way detrimental to the interest of the company.

TYPE OF PRODUCT
OR NAME OF
CUSTOMER/PROJECT

BHARAT HEAVY ELECTRICALS LTD.,
UNIT: HIGH PRESSURE BOILER PLANT.
TIRUCHIRAPALLI -620014.
365-120

	NAME	SIGN	DATE	NO.OF VAR.
DRN	T.R.R.MURTHY		29.01.96	–
CHD	N.DHANAPAL		30.01.96	
APPD	A.VISWANATHAN		30.01.96	

DEPT VL
CODE 320
SCALE NTS.
WEIGHT (KG). –
REFERENCE INFORMATIONS CAD:C206131R
NO. OF ITEMS –

TITLE BODY (3"-150C)
CARD CODE U 01
DRAWING NO. 2-V-0000-06131R
REV 02

Size A2

ALL DIMENSIONS ARE IN MILLIMETRES. FOR TOLERANCES OF UNTOLERANCED DIMENSIONS DURING MANUFACTURE REFER RELEVANT QCP / QP.

DRAWING NO. 3-V-0000-17688R

SL.No.	DRAWING No.	MATL.SPECN.	MATL.CODE.	WT. (kg)	MATL.MARK TO BE PUNCHED *	SCRAP SORT	DIMENSIONS øD	øD1	L	L1	R	REMARKS
01	3-V-5199-17688R/02	A351-CF8 SH,ATTEST	92 200 656	10.2	CF8	46	260	--	50	24	15	3"-150C
02	3-V-5197-17688R/01		92 200 657	13.2			294	--	50	24		4"-150C
03	3-V-5196-17688R/01		92 200 658	29.0			370	--	64	34		6"-150C
04	3-V-Z001-17688R/02		92 200 659	42.2			440	--	65	35		8"-150C
05	3-V-M332-17688R/01		92 200 653	12.8			252	--	58	32		2"-300C
06	3-V-Z004-17688R/01		92 200 780	6.9			210	--	50	24		2"-150C
07	3-V-5152-17688R/01		92 200 781	14.9			272	--	58	32		3"-300C
# 08	3-V-U633-17688R		92 203 544	10.2			260	--	50	24		3"-150C
# 09	3-V-U638-17688R		92 203 543	6.9			210	--	50	24		2"-150C
# 10	3-V-U639-17688R		92 203 545	12.8			252	--	58	32		2"-300C
# 11	3-V-U934-17688R		92 203 693	29.0			370	--	64	34		6"-150C
# 12	3-V-U935-17688R		92 203 698	13.2			294	--	50	24		4"-150C
13	3-V-Z113-17688R	SA995 CD3MN REF. NOTE, ATTEST	92 203 612	13.2	CD3MN		294	--	50	24		4"-150C
14	3-V-Z120-17688R	A351-CF3M SH,ATTEST	92 203 853	10.2	CF3M		260	--	50	24		3"-150C
15	3-V-Z121-17688R		92 203 855	29.0			370	--	64	34		6"-150C

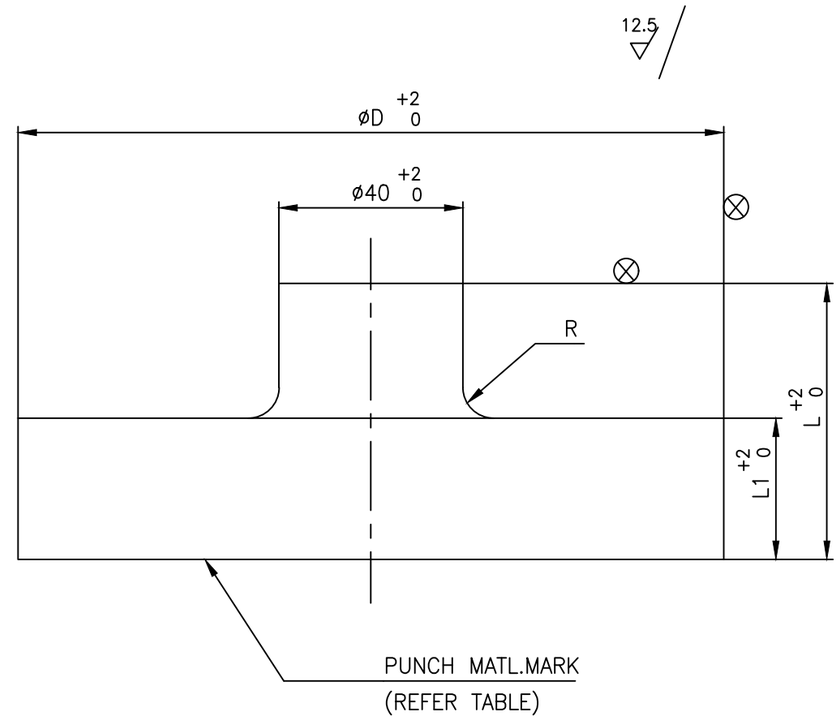

NOTES:-

1. CASTING SHALL BE MADE AND PROOF MACHINED TO THE DIMENSION SHOWN IN TABULATION.
2. ⊗ UNSPECIFIEDCASTING RADII-R3
3. INDICATES THE SURFACES WHICH ARE TO BE MACHINED FURTHER.
4. CASTING SHALL COMPLY WITH REQUIRMENT OF LATESTAPPLICABLE TDC.
5. # MARKED ITEMS IGC TEST SHALL BE CONDUCTED.
6. HEAT TREATMENT FOR SA995 CD3MN AS PER ASME STANDARD SA-995 TABLE 1 (HEAT TO 2050°F [1120°C] MINIMUM FOR SUFFICIENT TIME TO HEAT CASTING UNIFORMLY TO TEMPERATURE AND WATER QUENCH, OR THE CASTING MAY BE FURNACE COOLED TO 1850°F [1010°C] MINIMUM, HOLD FOR 15 MIN MINIMUM AND THEN WATER QUENCH. A RAPID COOL BY OTHER MEANS MAY BE EMPLOYED IN LIEU OF WATER QUENCH.)

REV	DATE	ALTERED	R.P.SINGH
08	31.05.19	CHD & APPD	SSK & KRS

SL. NO. 14 TO 15 INCLUDED

CAUTION: The information on this document is the property of BHARAT HEAVY ELECTRICALS LTD. It must not be used directly or indirectly in any way detrimental to the interest of the company.

SL. No.	DESCRIPTION	MATL CODE	MATL SPECN	HEAT TREATMENT	SCRAP SORT	NET WT (kg)	GROSS WT (kg)	DRAWING No / COMP. CODE	ITEM No

TYPE OF PRODUCT OR NAME OF CUSTOMER/PROJECT

DRAWING REDRAWN WITH REV. 07 ON 05.09.18

BHARAT HEAVY ELECTRICALS LTD.,
UNIT: HIGH PRESSURE BOILER PLANT.
TIRUCHIRAPALLI-620014.
365-121

	NAME	SIGN	DATE	NO.OF VAR.
DRN	K.P.LEON		27.03.98	
CHD	N.DHANAPAL		27.03.98	
APPD	K.SAKETHARAMAN		27.03.98	

DEPT VL
CODE 320
SCALE N T S
WEIGHT (KG). --
REFERENCE INFORMATIONS CAD: C317688R
NO. OF ITEMS

TITLE COVER (PROFF MACHINED CASTING)
CARD CODE U 01
DRAWING NO. 3-V-0000-17688R
REV 08

Size A3

DRAWING NO. 2-V-0000-06093R

ALL DIMENSIONS ARE IN MILLIMETRES. FOR TOLERANCES OF UNTOLERANCED DIMENSIONS DURING MANUFACTURE REFER RELEVANT QCP / QP

SECTION-AA

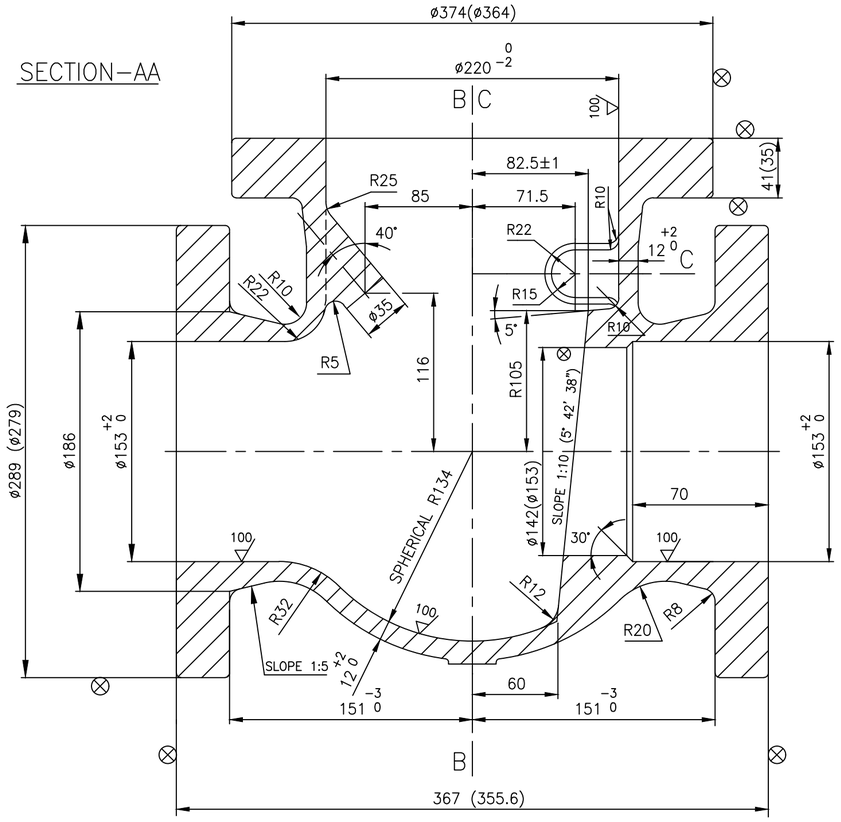

SECTION-BB

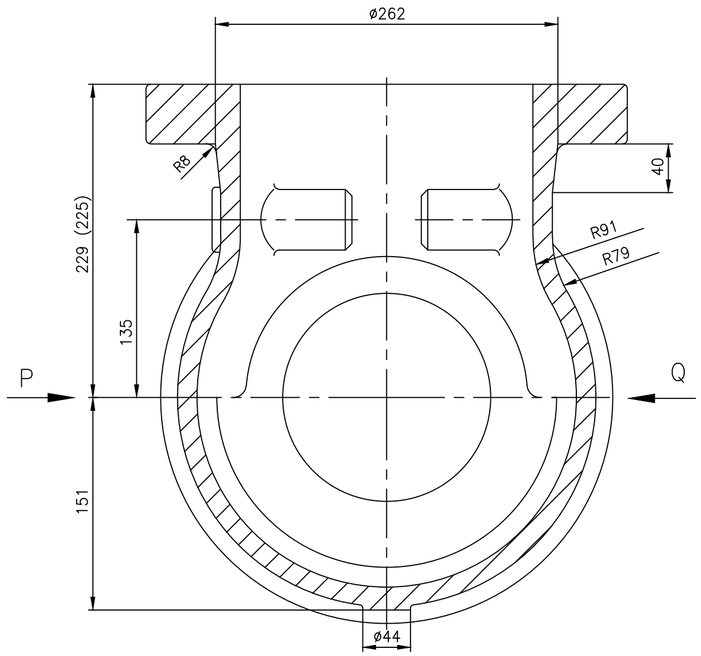

VIEW-Q

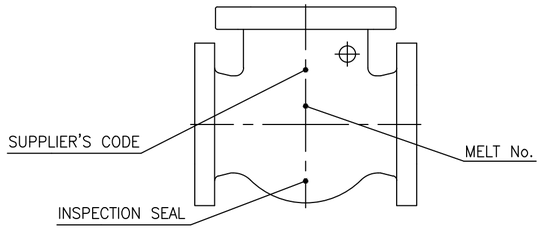

VIEW-P

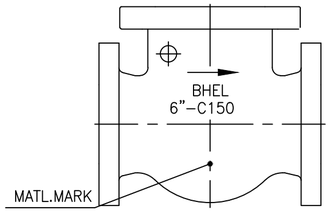

SECTION-CC

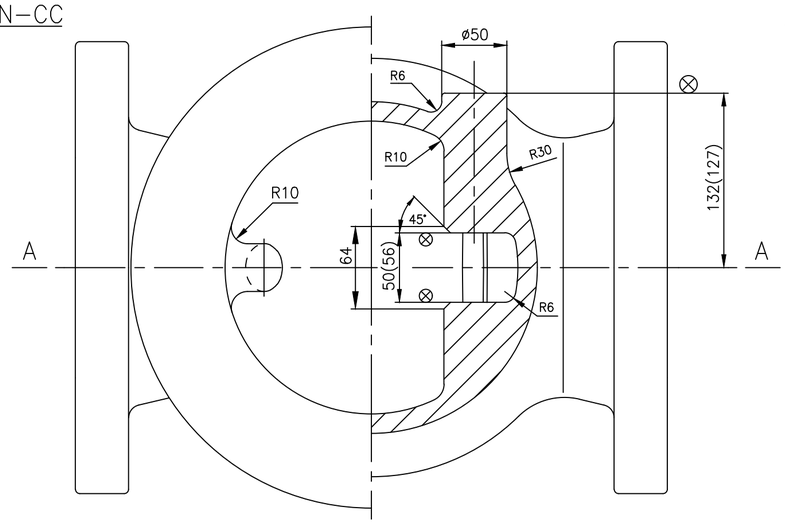

NOTES:-

1. NECESSARY MACHINING ALLOWANCES HAVE BEEN ADDED ON ALL MACHINABLE SURFACES
2. PERMISSIBLE DIMENSIONAL DEVIATIONS OF NON TOLERANCED CASTING DIMENSIONS – REFER LATEST APPLICABLE TDC
3. FINISHED MACHINED DIMENSIONS ARE INDICATED WITHIN BRACKETS FOR INFORMATION ONLY.
4. 100 ▽ CASTING SURFACES MUST BE HIGH QUALITY WITHOUT SURFACE UNEVENNESS
5. ALL DETAILS SHOWN IN VIEWS P & Q , EXCEPT MELT No. AND INSPECTION SEAL, ARE TO BE CAST.
6. CASTING SHALL COMPLY WITH THE REQUIREMENTS OF LATEST APPLICABLE TDC
7. UNSPECIFIED CASTING RADII 3 – 5 MM
8. HEIGHT OF CASTING LETTERS 20MM
9. ⊗ SURFACES TO BE MACHINED
10. THIS DRAWING IS DIMENSIONALLY IDENTICAL AND SIMILAR IN ALL RESPECTS TO THE DRWAING 1-V-5156-02776R EXCEPT MATERIAL SPECIFICATION.
11. # MARKED ITEMS IGC TEST SHALL BE CONDUCTED.

No OFF	DESCRIPTION	MATL CODE	MATL SPECN	HEAT TREATMENT	SCRAP SORT	NET WT (kg)	GROSS WT (kg)	DRAWING No	ITEM No
3	CF3M	92 203 854	SA351 CF3M (ATTEST)	SH	46	88	–	2.V.Z121.06093R	01
#2	CF8	92 203 692	SA351 CF8 (ATTEST)	SH	46	88	–	2.V.U934.06093R	01
1	CF8	92 200 467	SA351 CF8 (ATTEST)	SH	46	88	–	2.V.5196.06093R	01

TYPE OF PRODUCT OR NAME OF CUSTOMER/PROJECT: CS

BHARAT HEAVY ELECTRICALS LTD.,
UNIT: HIGH PRESSURE BOILER PLANT.
TIRUCHIRAPALLI -620014.
365-120

	NAME	SIGN	DATE	NO.OF VAR.
DRN	K.P.LEON		16.12.95	–
CHD	N.DHANAPAL		18.12.95	
APPD	A.VISWANATHAN		20.12.95	

DEPT VL | CODE 320 | SCALE NTS. | WEIGHT (KG). – | REFERENCE INFORMATIONS CAD:C206093R | NO. OF ITEMS –

TITLE: BODY 6"-150C | CARD CODE U 01 | DRAWING NO. 2-V-0000-06093R | REV 02

REV	DATE	ALTERED	R.P.SINGH
02	31.05.19	CHD & APPD	SSK & KRS
		SL. No. 03 INCLUDED	

REV	DATE	ALTERED	R.P.SINGH
01	22.01.19	CHD & APPD	SSK & KRS
ZONE		SL. No. 2 INCLUDED. NOTE No. 11 INCLUDED.	

CAUTION: The information on this document is the property of BHARAT HEAVY ELECTRICALS LTD. It must not be used directly or indirectly in any way detrimental to the interest of the company.

Size A2

CORPORATE DRG ID:TP-DG-2-V-0000-05877R/04

DRAWING NO. 2-V-0000-05877R

ALL DIMENSIONS ARE IN MILLIMETRES. FOR TOLERANCES OF UNTOLERANCED DIMENSIONS DURING MANUFACTURE REFER RELEVANT QCP / QP

SECTION-AA

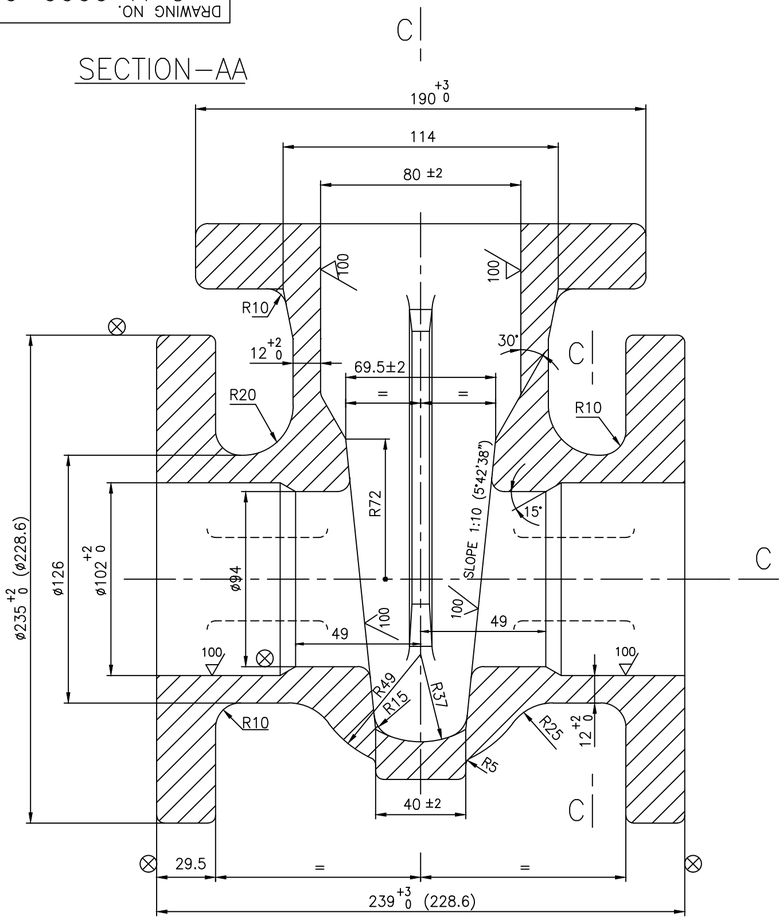

SECTION-BB

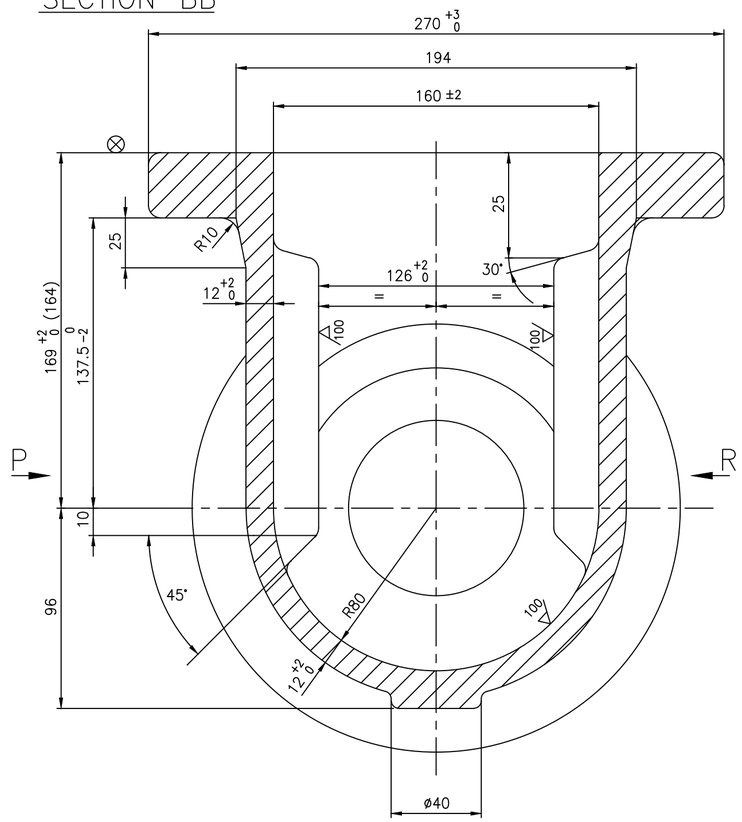

SECTION-CC

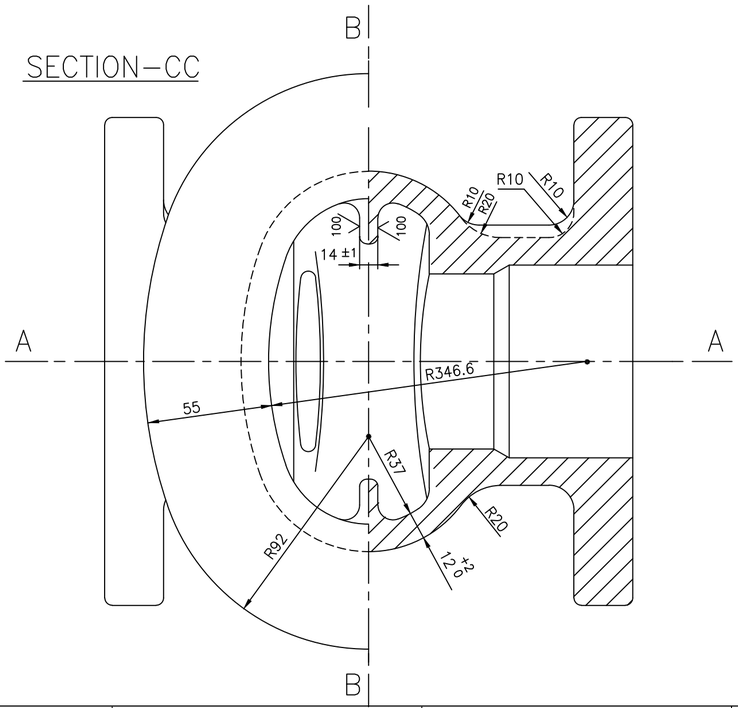

SECTION-DD

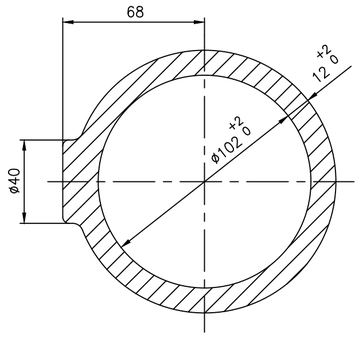

CAST IDENTIFICATION MARK

VIEW-P

BHEL
4"
150

SUPPLIER'S CODE
MATL. MARK *(REF.TABLE)

VIEW-R

INSPECTION SEAL
MELT No.

NOTES:-

1. CASTING SHALL COMPLY WITH REQUIREMENTS OF LATEST APPLICABLE QUALITY PROCEDURE.
2. NECESSARY MACHINING ALLOWANCES HAVE BEEN ADDED ON ALL MACHINABLE SURFACES.
3. 100 CASTING SURFACES MUST BE OF HIGH QUALITY WITHOUT SURFACE UNEVENNESS.
4. UNSPECIFIED CASTING RADII R3 TO R5.
5. HEIGHT OF CASTING LETTERS-20mm.
6. ⊗ SURFACES TO BE MACHINED.
7. FINISH-MACHINED DIMENSIONS ARE INDICATED WITHIN BRACKETS.
8. MELT No. & INSPECTION SEAL TO BE PUNCHED REST OF THE DETAILS ARE TO BE CAST.
9. RISER REMAINS ARE TO COMPLETELY REMOVED SUITABLY.

* SPECIAL NOTES:-

1. GUIDE RIB DIMENSIONS TO BE MAINTAINED WITHIN THE TOLERANCES INDICATED
2. BOTH GUIDE RIBS TO BE COPLANER AND TRUELY VERTICAL.
3. PROPER MATCHING FOR GUIDE RIBS WITH MACHINED WEDGE TO BE ENSURED BEFORE ACCEPTING CAST BODIES PREFERABLE AT THE FOUNDARY.
4. THIS DRAWING IS DIMENSIONALLY IDENTICAL TO 1-V-0000-02864R EXCEPT MATERIAL SPECIFICATION.
5. # MARKED ITEMS ARE IGC TEST SHALL BE CONDUCTED.

MATL. MARK	SL. No.	DESCRIPTION	MATL CODE	MATL SPECN	HEAT TREATMENT	SCRAP SORT	NET WT (kg)	GROSS WT (kg)	DRAWING No / COMPONENT CODE	ITEM No
CF8	#05	CASTING	–	SA351 CF8 ATTEST	SH	--	37.5	--	2.V.U936.05877R / 922037530000	001
CF3M	04	CASTING	–	SA351 CF3M ATTEST	SH	--	37.5	--	2.V.NK02.05877R / 922034700000	001
LCD	03	CASTING	–	A352 LCB ATTEST	NR	--	37.5	--	2.V.N769.05877R / 922008870000	001
CF8M	02	CASTING	–	ASTM A351 CF8M ATTEST	SH	--	37.5	--	2.V.N438.05877R / 922005150000	001
CF8	01	CASTING	–	ASTM A351 CF8 ATTEST	SH	--	37.5	--	2.V.N285.05877R / 922003000000	001

REV	DATE	ALTERED	R.P.SINGH
04	03.12.18	CHD & APPD	SSK & KRS
ZONE		SL. No. 05 INCLUDED.	

CAUTION: The information on this document is the property of BHARAT HEAVY ELECTRICALS LTD. It must not be used directly or indirectly in any way detrimental to the interest of the company.

TYPE OF PRODUCT
OR NAME OF
CUSTOMER/PROJECT

DWG. REDRAWN WITH REV. 04 ON 03.12.18

BHARAT HEAVY ELECTRICALS LTD.,
UNIT: HIGH PRESSURE BOILER PLANT.
TIRUCHIRAPALLI -620014.
365-120

	NAME	SIGN	DATE	NO.OF VAR.
DRN	R.T.S.GNANAM		14.06.97	–
CHD	N.DHANAPAL		14.06.97	
APPD	A.VISWANATHAN		14.06.97	

DEPT	SCALE	WEIGHT (KG).	REFERENCE INFORMATIONS	NO. OF ITEMS
VL	NTS.	REF. TABLE	CAD:C205877R	–
CODE 320				

TITLE	CARD CODE	DRAWING NO.	REV
BODY (4"-C150)	U 01	2-V-0000-05877R	04

Size A2

CORPORATE DRG ID:TP-DG-2-V-0000-05877R/04

DRAWING NO. 2-V-0000-05873R

ALL DIMENSIONS ARE IN MILLIMETRES. FOR TOLERANCES OF UNTOLERANCED DIMENSIONS DURING MANUFACTURE REFER RELEVANT QCP / QP

SECTION-AA

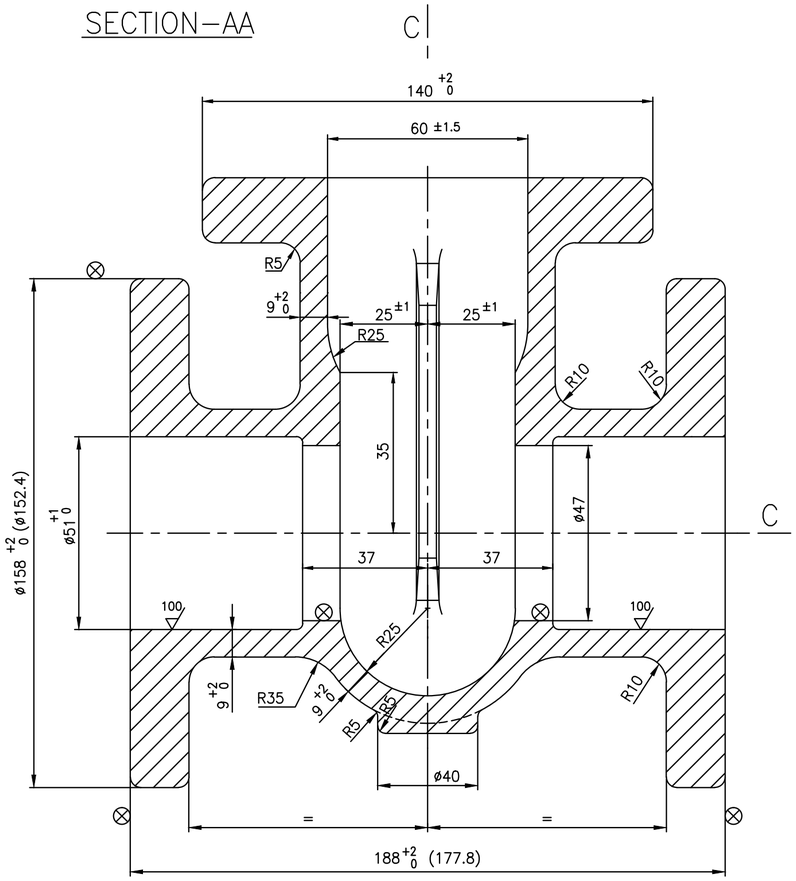

SECTION-BB

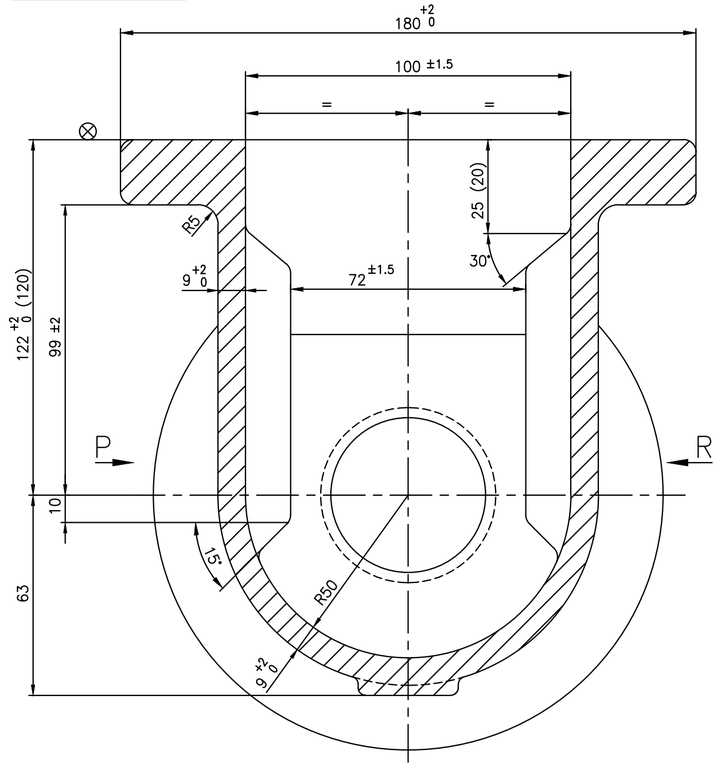

CAST IDENTIFICATION MARK

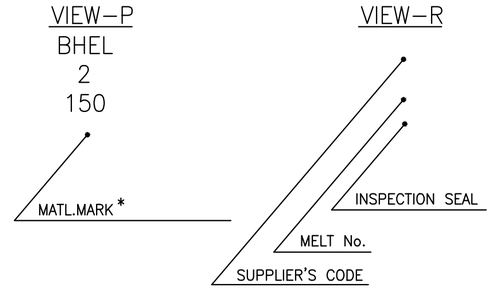

NOTES:-

1. NECESSARY MACHINING ALLOWANCES HAVE BEEN ADDED ON ALL MACHINABLE SURFACES.
2. UNSPECIFIED CASTING RADII R3 TO R5.
3. 100 CASTING SURFACES MUST BE OF HIGH QUALITY WITHOUT SURFACE UNEVENNESS.
4. HEIGHT OF CASTING LETTERS-12mm.
5. ⊗ SURFACES TO BE MACHINED.
6. FINISHED MACHINED DIMENSIONS ARE INDICATED WITHIN BRACKETS.
7. RISER REMAINS ARE TO COMPLETELY REMOVED SUITABLY.
8. CASTING SHALL COMPLY WITH REQUIREMENTS OF APPLICABLE TDC.
9. MELT No. & INSPECTION SEAL TO BE PUNCHED REST OF THE DETAIL ARE TO CAST.
10. # MARKED ITEMS IGC TEST SHALL BE CONDUCTED

* SPECIAL NOTES:-

1. GUIDE RIB DIMENSIONS TO BE MAINTAINED WITHIN THE TOLERANCES INDICATED
2. BOTH GUIDE RIBS TO BE COPLANER AND TRUELY VERTICAL.
3. PROPER MATCHING FOR GUIDE RIBS WITH MACHINED WEDGE TO BE ENSURED BEFORE ACCEPTING CAST BODIES PREFERABLE AT THE FOUNDARY.
4. THIS DRAWING IS DIMENSIONALLY IDENTICAL TO 2-V-N073-03401R EXCEPT MATERIAL SPECIFICATION.

SECTION-CC

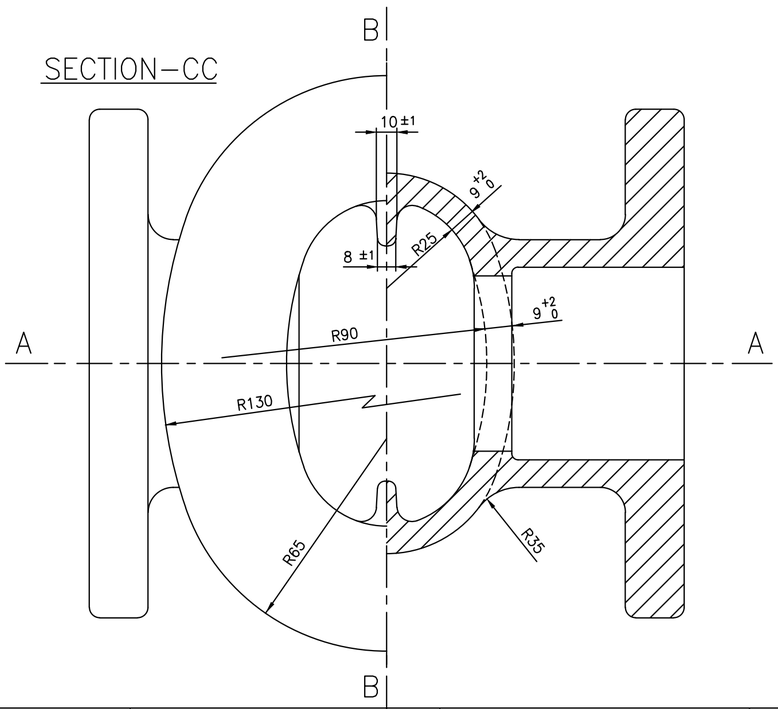

MATL MARK*	SL No.	DESCRIPTION	MATL CODE	MATL SPECN	HEAT TREATMENT	SCRAP SORT	NET WT (kg)	GROSS WT (kg)	DRAWING No / COMPONENT CODE	ITEM No
CF8	#04	CASTING	92 203 537	A351 CF8 ATTEST	SH	–	–	–	2.V.U634.05873R 92 203 537 0000	01
CF3M	03	CASTING	92 203 471	SA351 CF3M ATTEST	SH	–	–	–	2.V.NK01.05873R 92 203 471 0000	01
CF8M	02	CASTING	92 200 555	A351 CF8M ATTEST	SH	–	–	–	01 2.V.N472.05873R 92 200 555 0000	01
CF8	01	CASTING	92 200 293	A351 CF8 ATTEST	SH	–	–	–	2.V.N277.05873R 92 200 293 0000	01

REV	DATE	ALTERED	
03	07.05.18	R.P.SINGH	CHD & APPD SSK & KRS
		SL.No.04 INCLUDED	

REV	DATE	ALTERED	
02	24.06.16	K.NAVIN	CHD & APPD MS & SSK
		SL.No.03 INCLUDED	

REV	DATE	ALTERED	
01	22.03.96	N.DHANAPAL	CHD & APPD A.VISWANATHAN
ZONE		SL.No.02 INCLUDED	

CAUTION: The information on this document is the property of BHARAT HEAVY ELECTRICALS LTD. It must not be used directly or indirectly in any way detrimental to the interest of the company.

TYPE OF PRODUCT OR NAME OF CUSTOMER/PROJECT

DRAWING REDRAWN WITH REV.01 ON 22.03.1996

BHARAT HEAVY ELECTRICALS LTD., UNIT: HIGH PRESSURE BOILER PLANT. TIRUCHIRAPALLI -620014.

365-120

	NAME	SIGN	DATE	NO.OF VAR.
DRN	K.P.LEON		15.05.95	–
CHD	N,DHANAPAL		18.05.95	
APPD	A.VISWANATHAN		26.05.95	

DEPT	SCALE	WEIGHT (KG).	REFERENCE INFORMATIONS	NO. OF ITEMS
VL	NTS.	14.1	CAD:C205873R	–

CODE 320

TITLE: BODY (2"-C150 FL)

CARD CODE: U 01

DRAWING NO. 2-V-0000-05873R REV 03

Size A2

DRAWING NO. 1-V-0000-05148R

ALL DIMENSIONS ARE IN MILLIMETRES. FOR TOLERANCES OF UNTOLERANCED DIMENSIONS DURING MANUFACTURE REFER RELEVANT QCP/QP

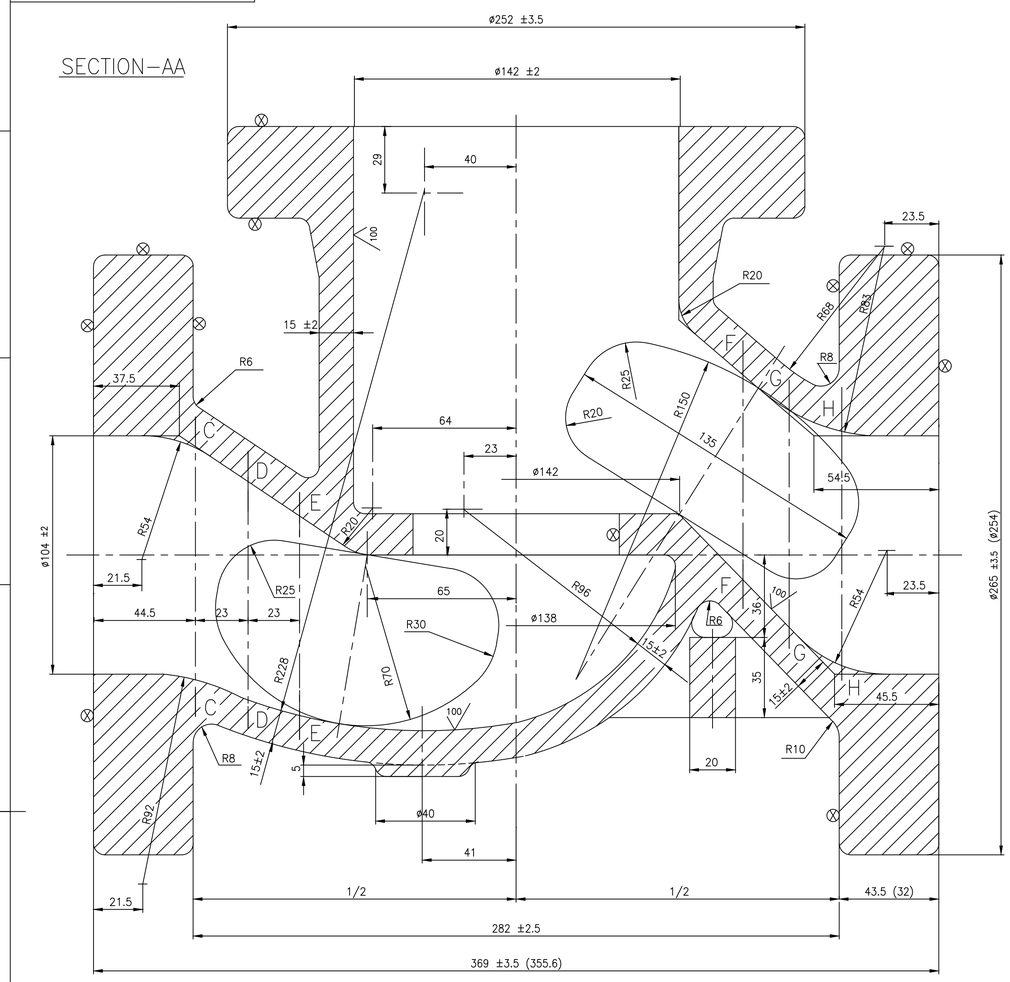

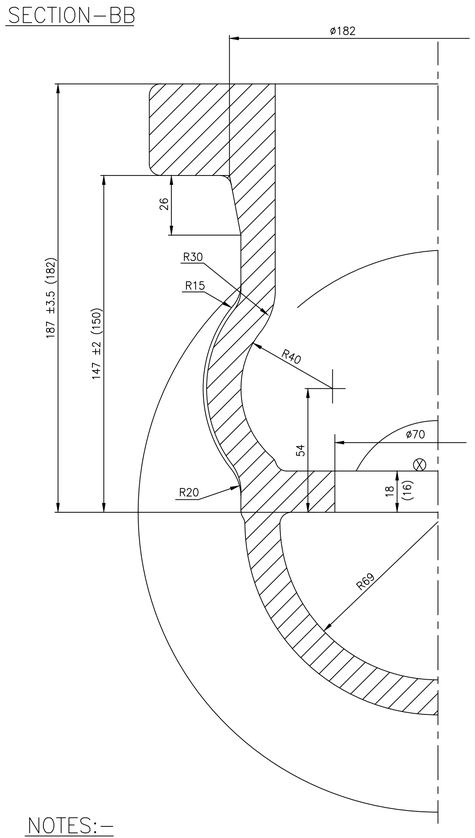

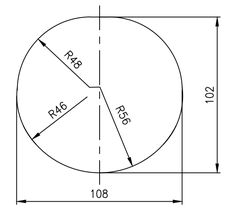

SECTION–CC

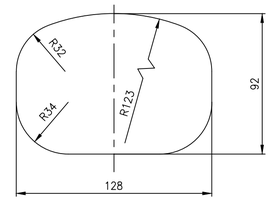

SECTION–FF

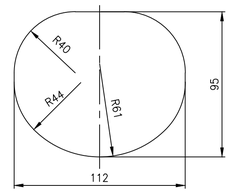

SECTION–DD

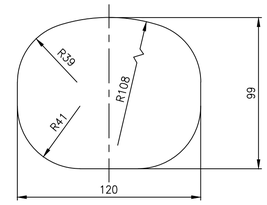

SECTION–GG

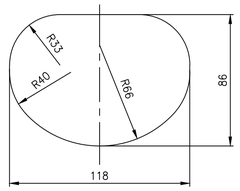

SECTION–EE

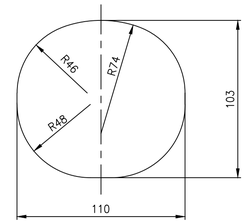

SECTION–HH

NOTES:–

1. CASTINGS SHALL COMPLY WITH REQUIREMENTS OF LATEST APPLICABLE QUALITY PROCEDURE.
2. NECESSARY MACHINING ALLOWANCES HAVE BEEN ADDED IN THIS DRAWING ON ALL MACHINABLE SURFACES.
3. ⊗ INDICATES THE SURFACES WHICH ARE TO BE MACHINED FURTHER.
4. 100/ INDICATES THE CASTING SURFACES WHICH MUST BE OF HIGH QUALITY WITHOUT SURFACE UNEVENNESS.
5. UNSPECIFIED CASTING RADII–R5 MAX.
6. ALL DETAILS IN VIEW "P" & "R" EXCEPT MELT No. & INSPECTION SEAL ARE TO BE CAST. HEIGHT OF CASTING LETTERS–12MM.
7. FINISH MACHINED DIMENSIONS INDICATED WITHIN BRACKETS ARE FOR INFORMATION ONLY.
8. THIS DRAWING IS DIMENSIONALLY IDENTICAL TO THE DRAWING 0.V.2479.01210R/01 IN ALL ASPECT EXCEPT THE MATL.SPECN.
9. # MARKED ITEMS ARE IGC TEST SHALL BE CONDUCTED.

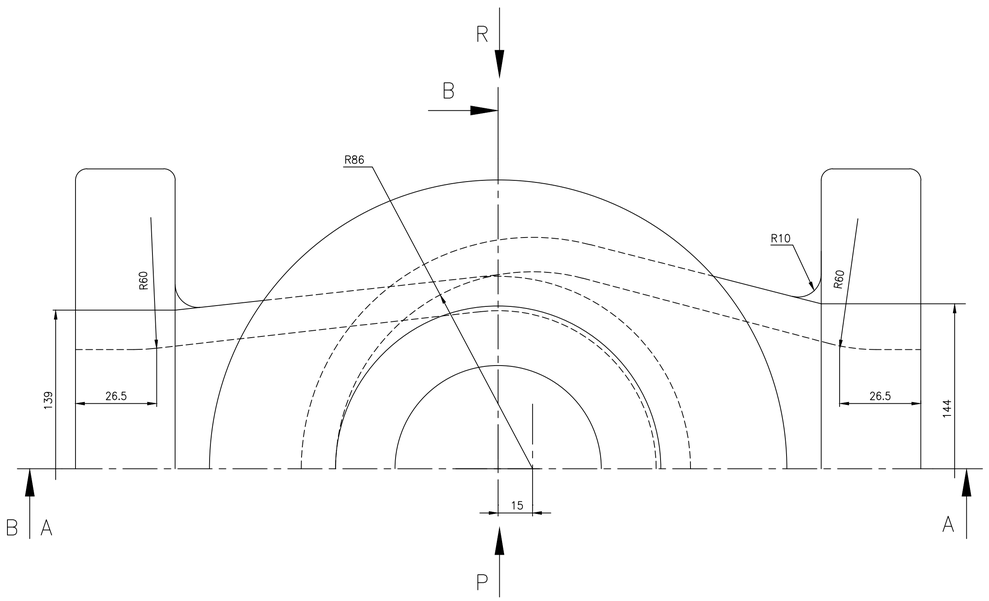

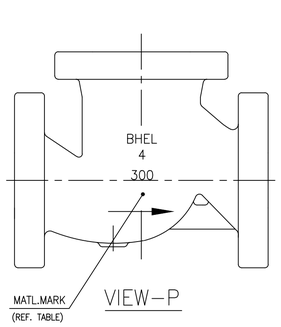

VIEW–P

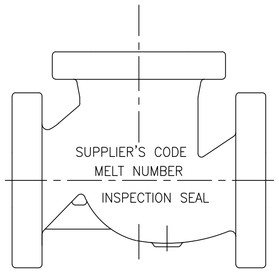

VIEW–R

SL.No.	DESCRIPTION	MATL CODE	MATL SPECN	HEAT TREATMENT	SCRAP SORT	NET WT (kg)	GROSS WT (kg)	DRAWING No	ITEM No
04	CF3M	92 203 840	ASTM A351 CF3M ATTEST	S H	46	65.0	–	1.V.P768.05148R	
# 03	CF8	92 203 706	ASTM A351 CF8 ATTEST	S H	46	65.0	–	1.V.U931.05148R	
02	CF8M	92 201 347	ASTM A351 CF8M ATTEST	S H	46	65.0	–	1.V.P404.05148R	
01	CF8	92 200 868	ASTM A351 CF8 ATTEST	S H	46	65.0	–	1.V.P336.05148R	

REV	DATE	ALTERED	
04	26.02.19	R.P.SINGH	CHD & APPD SSK & KRS
	SL.No. 04 INCLUDED		
REV	DATE	ALTERED	
03	01.12.18	R.P.SINGH	CHD & APPD SSK & KRS
	SL. No. 03 INCLUDED.		

CAUTION: The information on this document is the property of BHARAT HEAVY ELECTRICALS LTD. It must not be used directly or indirectly in any way detrimental to the interest of the company.

TYPE OF PRODUCT OR NAME OF CUSTOMER/PROJECT

DWG. REDRAWN WITH REV. 03 ON 01.12.18

BHARAT HEAVY ELECTRICALS LTD.,
UNIT: HIGH PRESSURE BOILER PLANT.
TIRUCHIRAPALLI–620014.
365–119

	NAME	SIGN	DATE
DRN	K.P.LEON		13.02.02
CHD	P.BOOMINATHAN		13.02.02
APPD	K.S.RAMAN		13.02.02

DEPT VL
CODE 320
SCALE NTS
WEIGHT (KG). 65.0
REFERENCE INFORMATIONS CAD:C105148R

TITLE BODY (4"–300C)
CARD CODE U 01
DRAWING NO. 1–V–0000–05148R
REV 04

Size A1

DRAWING NO. 2-V-0000-03153R

ALL DIMENSIONS ARE IN MILLIMETRES. FOR TOLERANCES OF UNTOLERANCED DIMENSIONS DURING MANUFACTURE REFER RELEVANT QCP / QP

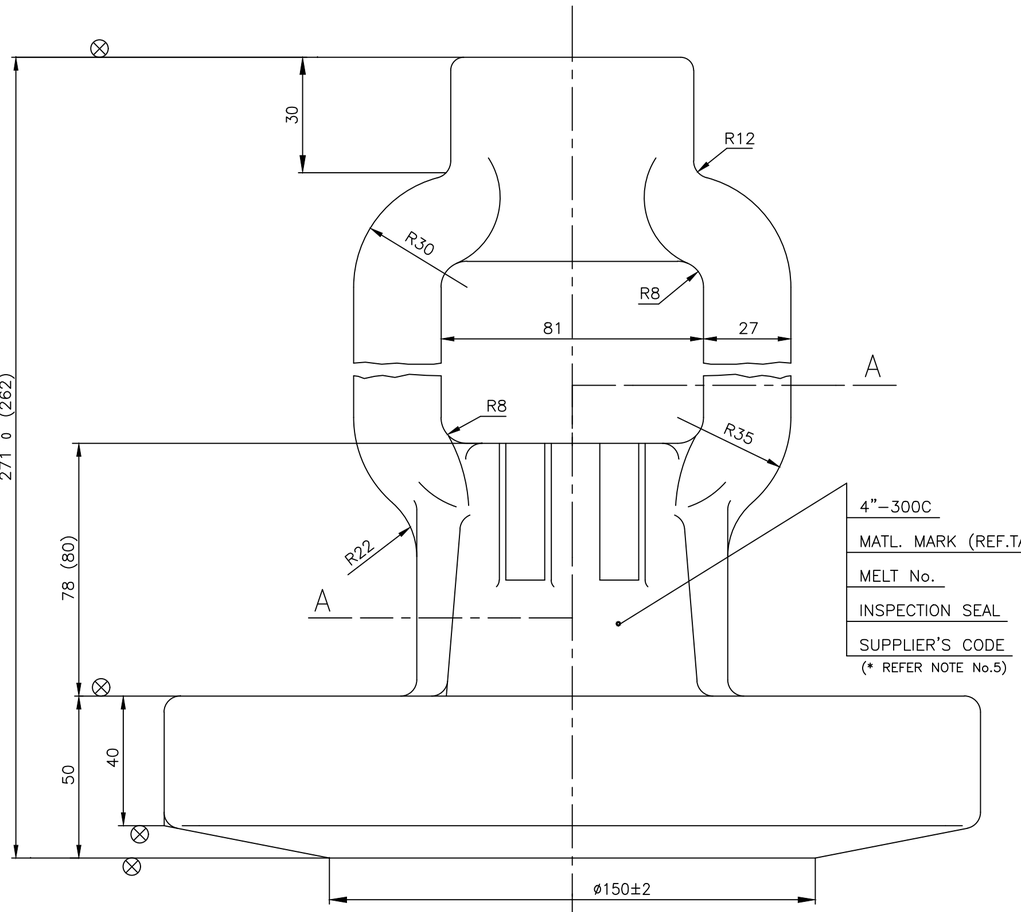

SECTION-BB

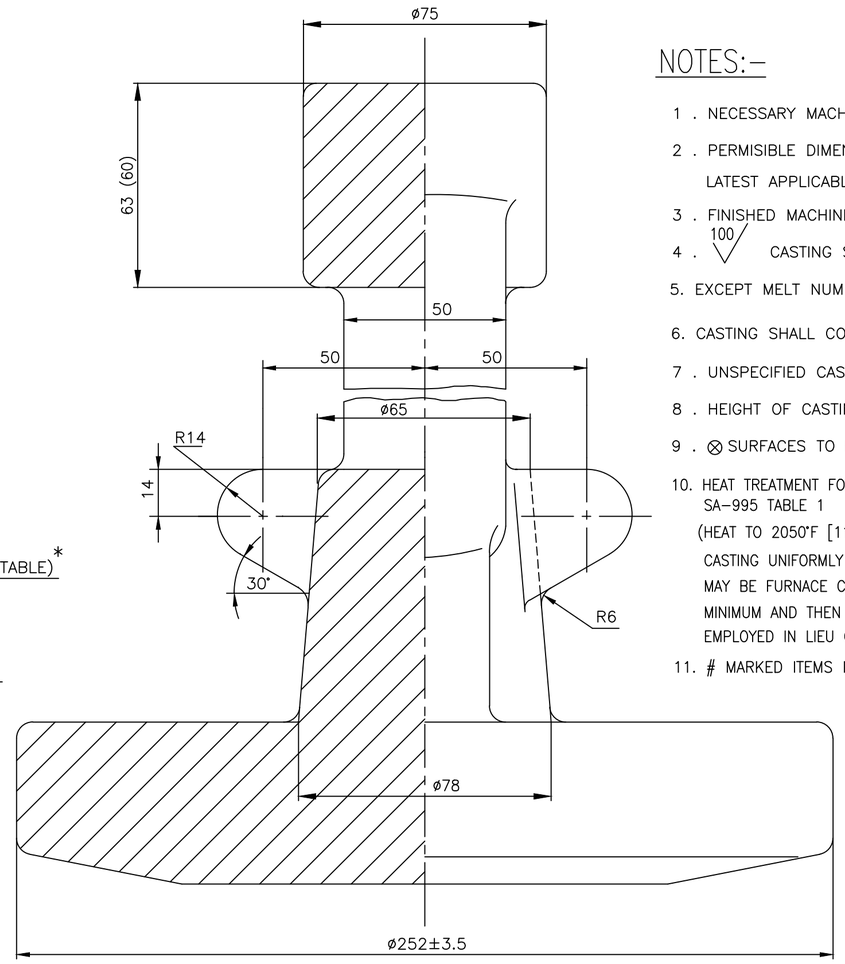

NOTES:-

1 . NECESSARY MACHINING ALLOWANCES HAVE BEEN ADDED ON ALL MACHINABLE SURFACES

2 . PERMISIBLE DIMENSIONAL DEVIATIONS OF NON TOLERANCED CASTING DIMENSIONS – REFER LATEST APPLICABLE QUALITY PROCEDURE.

3 . FINISHED MACHINED DIMENSIONS ARE INDICATED WITHIN BRACKETS FOR INFORMATION ONLY.

4 . 100 CASTING SURFACES MUST BE HIGH QUALITY WITHOUT SURFACE UNEVENNESS

5. EXCEPT MELT NUMBER & INSPECTION SEAL ALL OTHER DETAILS ARE TO BE CAST.

6. CASTING SHALL COMPLY WITH THE REQUIREMENTS OF LATEST APPLICABLE Q.P

7 . UNSPECIFIED CASTING RADII 3 – 5 MM

8 . HEIGHT OF CASTING LETTERS 20MM

9 . ⊗ SURFACES TO BE MACHINED

10. HEAT TREATMENT FOR SA995 CD3MN AS PER ASME STANDARD SA-995 TABLE 1
(HEAT TO 2050°F [1120°C] MINIMUM FOR SUFFICIENT TIME TO HEAT CASTING UNIFORMLY TO TEMPERATURE AND WATER QUENCH, OR THE CASTING MAY BE FURNACE COOLED TO 1850°F [1010°C] MINIMUM, HOLD FOR 15 MIN MINIMUM AND THEN WATER QUENCH. A RAPID COOL BY OTHER MEANS MAY BE EMPLOYED IN LIEU OF WATER QUENCH.)

11. # MARKED ITEMS IGC TEST SHALL BE CONDUCTED

SECTION-AA

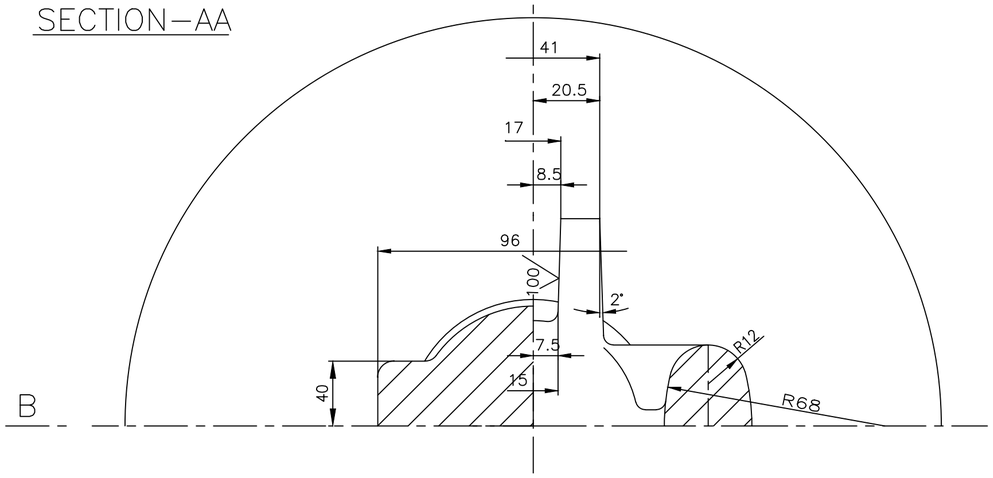

MATL.MARK*	SL No.	DESCRIPTION	MATL CODE	MATL SPECN	HEAT TREATMENT	SCRAP SORT	NET WT (kg)	GROSS WT (kg)	DRAWING No / COMPONENT CODE	ITEM No
CF3M	05	CASTING	–	A351-CF3M CERTIFY	S H	–	24.0	–	2.V.P768.03153R / 92 203 841 0000	006
CF8	#04	CASTING	–	A351-CF8 CERTIFY	S H	–	24.0	–	2.V.U931.03153R / 92 203 705 0000	006
CD3MN	03	CASTING	–	SA995 CD3MN CERTIFY	REFER NOTE	–	24.0	–	2.V.P725.03153R / 92 203 602 0000	006
CF8M	02	CASTING	–	A351-CF8M CERTIFY	SOLUTION ANNEALED	–	24.0	–	2.V.P345.03153R/1 / 92 200 988 0000	006
CF8	01	CASTING	–	A351-CF8 CERTIFY	SOLUTION ANNEALED	–	24.0	–	92 008 444 0000 / 2.V.2909.03153R/1	006

CAUTION: The information on this document is the property of BHARAT HEAVY ELECTRICALS LTD. It must not be used directly or indirectly in any way detrimental to the interest of the company.

TYPE OF PRODUCT OR NAME OF CUSTOMER/PROJECT

DRAWING RETRACED WITH REV. 03 (REF.DCN CS0133 & 0149) ON 06.05.98

BHARAT HEAVY ELECTRICALS LTD.,
UNIT: HIGH PRESSURE BOILER PLANT.
TIRUCHIRAPALLI -620014.
365-120

	NAME	SIGN	DATE	NO.OF VAR.
DRN	K.P.LEON		14.05.98	
CHD	N.DHANAPAL		14.05.98	
APPD	K.S.RAMAN		15.05.98	

DEPT VL
CODE 320
SCALE NTS.
WEIGHT (KG). ---
REFERENCE INFORMATIONS: CAD DRG : C203153R
NO. OF ITEMS

TITLE: YOKE CASTING
CARD CODE: U 01
DRAWING NO. 2-V-0000-03153R
REV 05

REV	DATE	ALTERED		REV	DATE	ALTERED		REV	DATE	ALTERED		REV	DATE	ALTERED		REV	DATE	ALTERED	
05	26.02.19	R.P.SINGH CHD & APPD	SSK & KRS	04	01.12.18	R.P.SINGH CHD & APPD	SSK & KRS	03	12.07.18	R.P.SINGH CHD & APPD	SSK & KRS	02	19.03.15	A.MARIMUTHU CHD & APPD	MS & SSK	01	06.05.98	K.P.LEON CHD & APPD	K.S.RAMAN
	SL.No. 05 INCLUDED				SL.No. 04 INCLUDED NOTE No. 11 ADDED				SL.No. 03 INCLUDED NOTE No. 10 ADDED				DRAWING UPDATED			ZONE	SL. NUMBER 02 INCLUDED.		

Size A2

DRAWING NO. 2-V-0000-08245R

ALL DIMENSIONS ARE IN MILLIMETRES. FOR TOLERANCES OF UNTOLERANCED DIMENSIONS DURING MANUFACTURE REFER RELEVANT QCP / QP

SECTION-AA

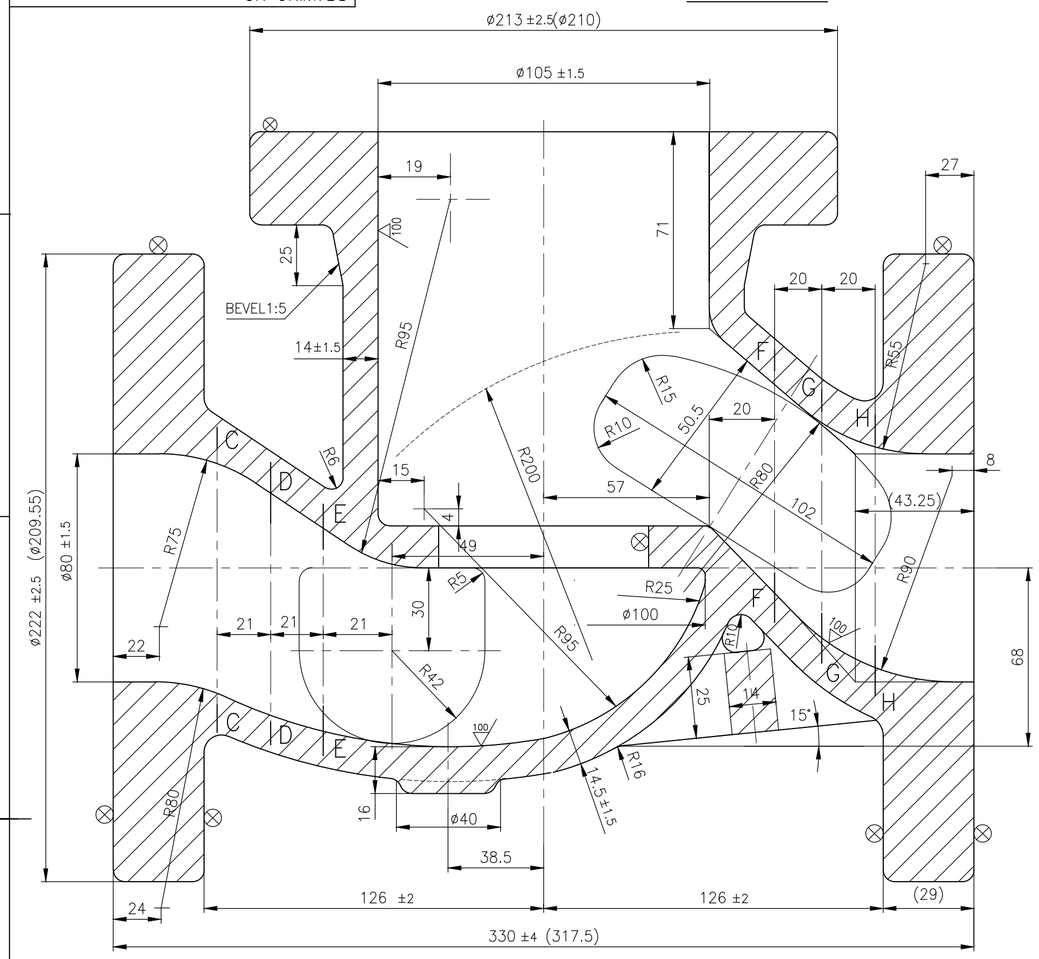

SECTION-BB

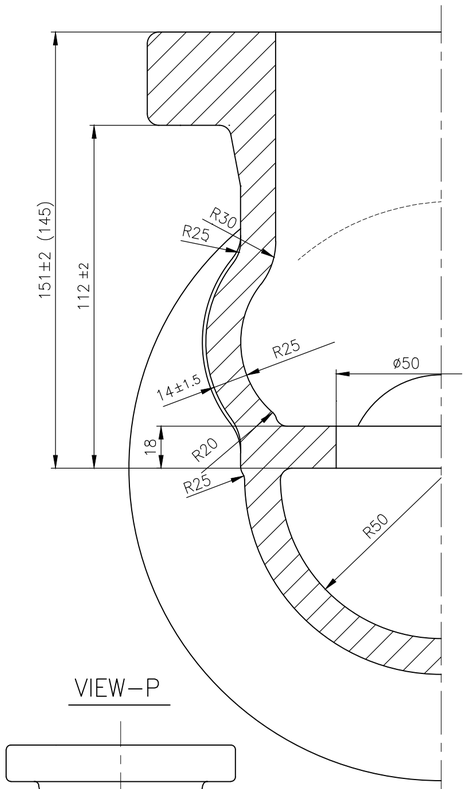

SECTION-CC

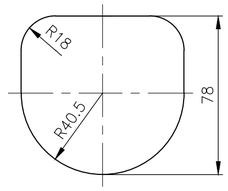

SECTION-DD

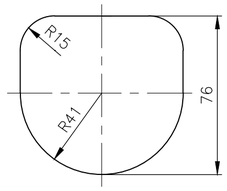

SECTION-EE

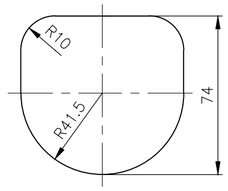

SECTION-FF

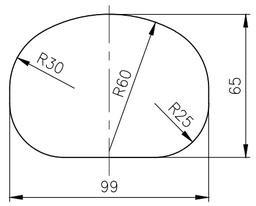

SECTION-GG

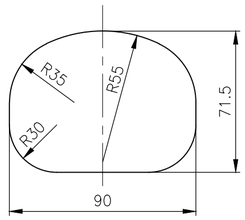

SECTION-HH

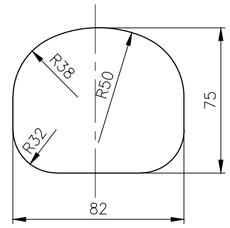

NOTES:

1. CASTINGS SHALL COMPLY WITH REQUIREMENTS OF LATEST APPLICABLE QUALITY PROCEDURE.
2. NECESSARY MACHINING ALLOWANCES HAVE BEEN ADDED IN THIS DRAWING ON ALL MACHINABLE SURFACES.
3. FOR THE PERMISSIBLE DIMENSIONAL DEVIATIONS OF NON-TOLERANCED CASTING DIMENSIONS REFER APPLICABLE TDC (LATEST REVISION).
4. ⊗ INDICATES THE SURFACES WHICH ARE TO BE MACHINED FURTHER.
5. UNSPECIFIED CASTING RADII-R5 MAX.
6. 100 ▽ INDICATES THE CASTING SURFACES WHICH MUST BE OF HIGH QUALITY WITHOUT SURFACE UNEVENNESS.
7. ALL DETAILS IN VIEW "P" & "R" EXCEPT MELT No. & INSPECTION SEAL ARE TO BE CAST. HEIGHT OF CASTING LETTERS-12MM.
8. FINISH MACHINED DIMENSIONS INDICATED WITHIN BRACKETS ARE FOR INFORMATION ONLY.
9. # MARKED ITEMS IGC TEST SHALL BE CONDUCTED.

VIEW-P

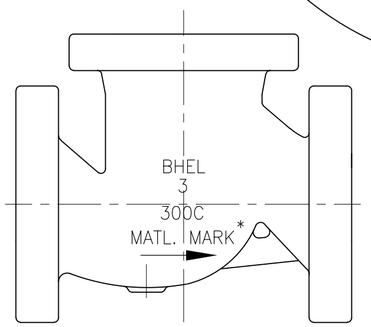

SECTION-KK

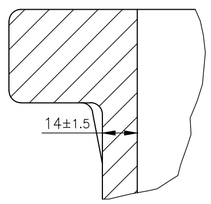

VIEW-R

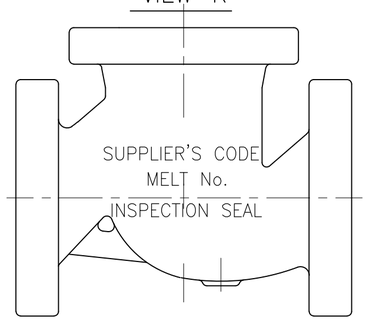

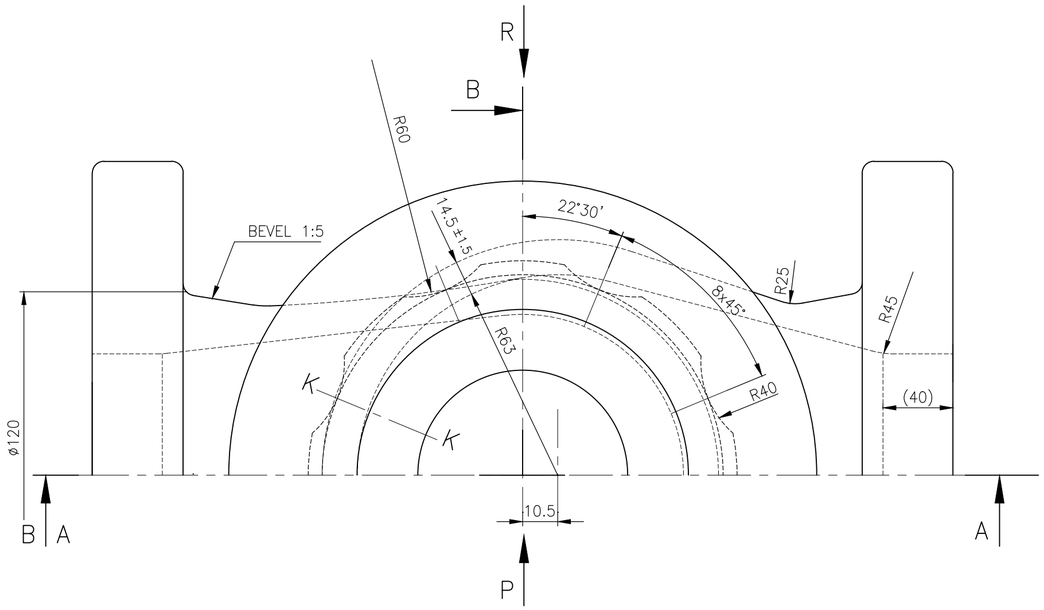

CF3M	03	CASTING	92 203 842	SA351 CF3M ATTEST	S H	46	--	41.0	2-V-P767-08245R 92 203 842 0000	–
CF8	#02	CASTING	92 203 776	SA351 CF8 ATTEST	S H	46	--	41.0	2-V-P760-08245R 92 203 776 0000	–
CF8M	01	CASTING	92 201 207	SA351 CF8M ATTEST	S H	46	--	41.0	2-V-P386-08245R 92 201 207 0000	–
MATL. MARK *	No OFF	DESCRIPTION	MATL CODE	MATL SPECN	HEAT TREATMENT	SCRAP SORT	NET WT (kg)	GROSS WT (kg)	DRAWING No	ITEM No

REV	DATE	ALTERED	R.P.SINGH
02	26.02.19	CHD & APPD	SSK & KRS
ZONE	SL.No. 03 INCLUDED		

CAUTION: The information on this document is the property of BHARAT HEAVY ELECTRICALS LTD. It must not be used directly or indirectly in any way detrimental to the interest of the company.

TYPE OF PRODUCT OR NAME OF CUSTOMER/PROJECT: CS

BHARAT HEAVY ELECTRICALS LTD.,
UNIT: HIGH PRESSURE BOILER PLANT.
TIRUCHIRAPALLI -620014.
365-120

	NAME	SIGN	DATE	NO.OF VAR.
DRN	K.P.LEON		18.08.2k	–
CHD	N.DHANAPAL		18.08.2k	
APPD	K.S.RAMAN		18.08.2k	

DEPT	SCALE	WEIGHT (KG).	REFERENCE INFORMATIONS	NO. OF ITEMS
VL	NTS.	41.0	CAD:C208245R	–
CODE 320				

TITLE	CARD CODE	DRAWING NO.	REV
BODY (3"-C300 FL)	U 01	2-V-0000-08245R	02

Size A2

DRAWING NO. 2-V-0000-14085R

ALL DIMENSIONS ARE IN MILLIMETRES. FOR TOLERANCES OF UNTOLERANCED DIMENSIONS DURING MANUFACTURE REFER RELEVANT QCP / QP

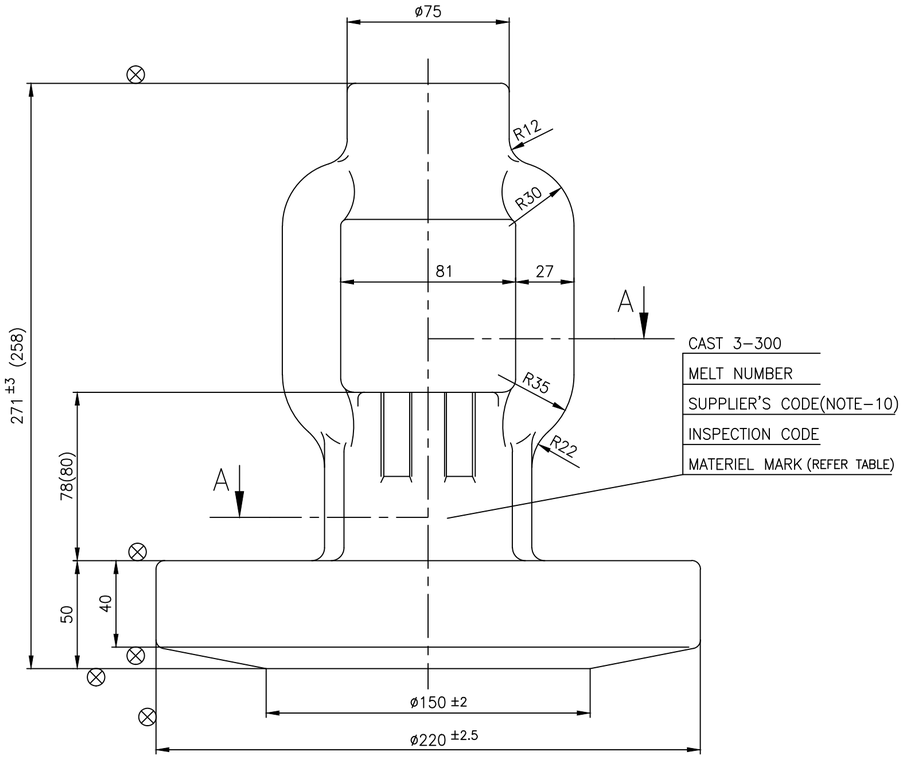

SECTION-BB

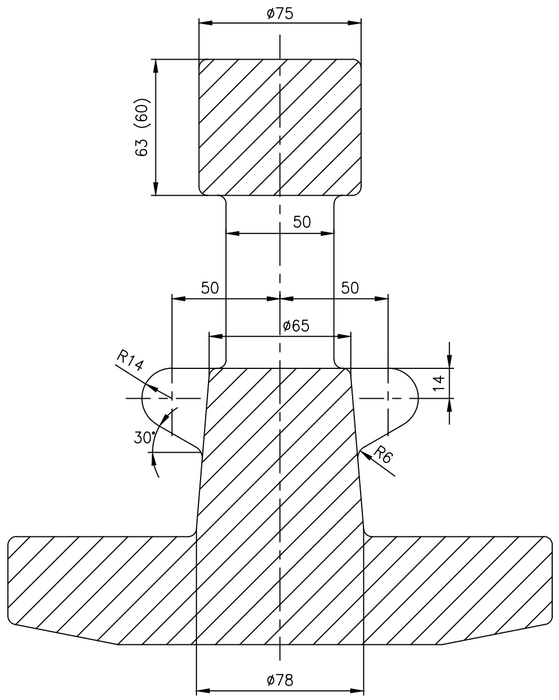

SECTION-AA

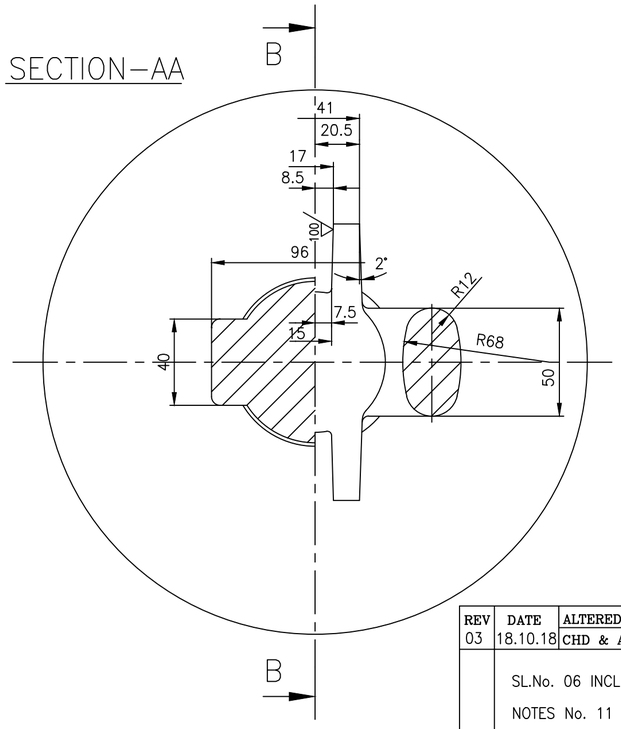

NOTES:

1 . NECESSARY MACHINING ALLOWANCES HAVE BEEN ADDED ON ALL MACHINABLE SURFACES
3 . FINISHED MACHINED DIMENSIONS ARE INDICATED WITHIN BRACKETS FOR INFORMATION
4 . 100 CASTING SURFACES MUST BE HIGH QUALITY WITHOUT SURFACE UNEVENNESS
5 . UNSPECIFIED CASTING RADII 3 – 5 MM
6 . HEIGHT OF CASTING LETTERS 20MM
7 . ⊗ SURFACES TO BE MACHINED
8 . CASTING SHALL COMPLY WITH THE REQUIREMENTS OF LATEST APPLICABLE QUALITY PROCEDURE.
9 . RISER REMAINS ARE TO COMPLETELY REMOVED SUITABLY.
10 . SUPPLIER'S CODE TO BE CAST AND ALL OTHER DETAILS SHALL BE PUNCHED.
11 . # MARKED ITEMS IGC TEST SHALL BE CONDUCTED.

SL No	MATL. MARK TO BE CAST	MATL CODE	MATL SPECN	HEAT TREATMENT	SCRAP SORT	NET WT (kg)	GROSS WT (kg)	DRAWING No	ITEM No
07	CF3M	92 203 843	ASTM A351 CF3M CERTIFY	S H	46	--	15.0	2.V.P767.14085R	06
#06	CF8	92 203 777	ASTM A351 CF8 CERTIFY	S H	46	--	15.0	2.V.P760.14085R	06
05	CF8M	92 201 663	ASTM A351 CF8M CERTIFY	S H	46	--	15.0	2.V.P464.14085R/01	06
04	CF8	92 201 662	ASTM A351 CF8 CERTIFY	S H	46	--	15.0	2.V.P259.14085R/01	06
03	WC9	92 201 661	ASTM A217 WC9 CERTIFY	N & T	20	--	15.0	2.V.P324.14085R/01	06
02	WC6	92 201 660	ASTM A217 WC6 CERTIFY	N & T	20	--	15.0	2.V.P364.14085R/01	06
01	WCB	92 201 659	ASTM A216 WCB CERTIFY	NORMALISED	10	--	15.0	2.V.2897.14085R/01	06

REV	DATE	ALTERED	
03	18.10.18	R.P.SINGH	CHD & APPD SSK & KRS
		SL.No. 06 INCLUDED	
		NOTES No. 11 INCLUDED.	

REV	DATE	ALTERED	
02	19.01.08	T.R.RAMAMURTHY	CHD & APPD P.BOOMINATHAN
		DIMN.ø220±2.5 WAS ø213±3.5	
		REFER DCP:800791	

REV	DATE	ALTERED	
01	05.06.07	T.R.RAMAMURTHY	CHD & APPD P.BOOMINATHAN
ZONE		IN SL.No.02 DRG.No.2.V.P364.14085R WAS 2.V.P464.14085R	

REV	DATE	ALTERED	
04	26.02.19	R.P.SINGH	CHD & APPD SSK & KRS
		SL.No. 07 INCLUDED	

CAUTION: The information on this document is the property of BHARAT HEAVY ELECTRICALS LTD. It must not be used directly or indirectly in any way detrimental to the interest of the company.

TYPE OF PRODUCT OR NAME OF CUSTOMER/PROJECT: CS

DRG.REDRAWN WITH REV.02 ON 19.01.2008

BHARAT HEAVY ELECTRICALS LTD.,
UNIT: HIGH PRESSURE BOILER PLANT.
TIRUCHIRAPALLI -620014.
365-120

	NAME	SIGN	DATE	NO.OF VAR.
DRN	T.R.RAMAMURTHY		19.01.08	
CHD	T.R.RAMAMURTHY		19.01.08	
APPD	P.BOOMINATHAN		19.01.08	

DEPT	SCALE	WEIGHT (KG).	REFERENCE INFORMATIONS	NO. OF ITEMS
VL	1 : 2	REFER TABLE	CAD REF: C214085R	
CODE 320				

TITLE	CARD CODE	DRAWING NO.	REV
YOKE (3"-300C GLOBE VALVE)	U 01	2-V-0000-14085R	04

Size A2

DRAWING NO. 2-V-0000-05872R

ALL DIMENSIONS ARE IN MILLIMETRES. FOR TOLERANCES OF UNTOLERANCED DIMENSIONS DURING MANUFACTURE REFER RELEVANT QCP / QP

SECTION–AA

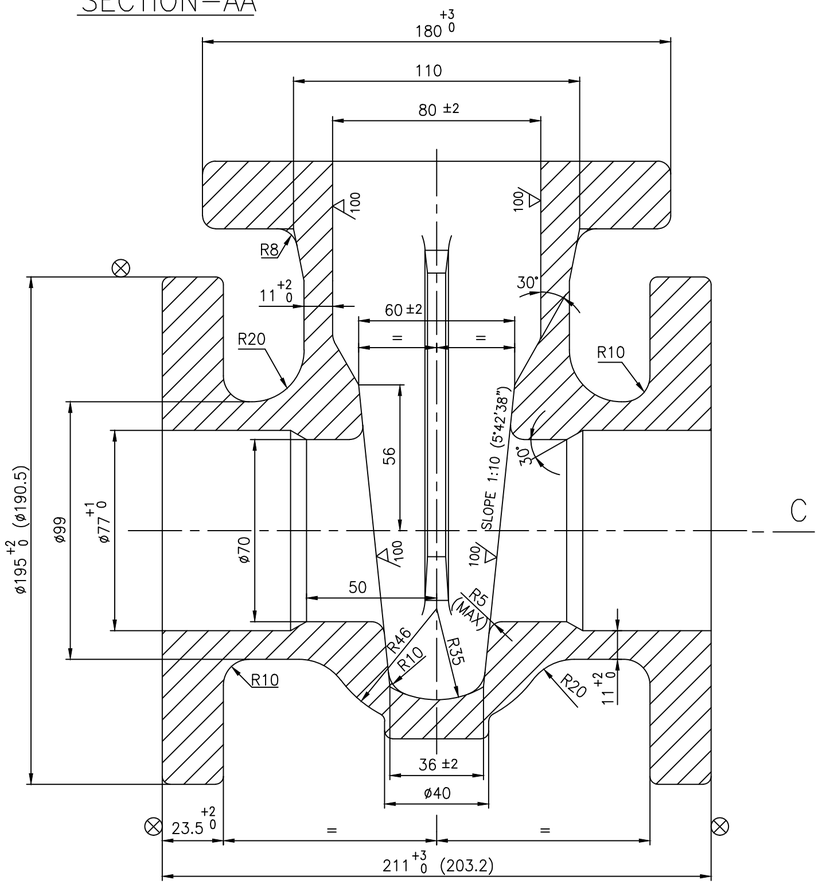

SECTION–BB

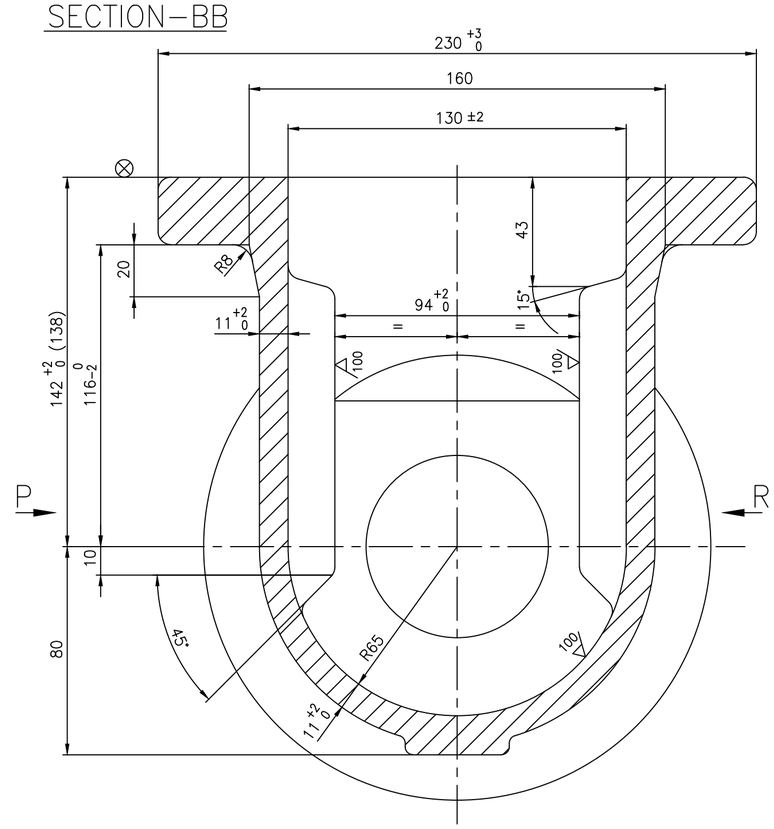

CAST IDENTIFICATION MARK

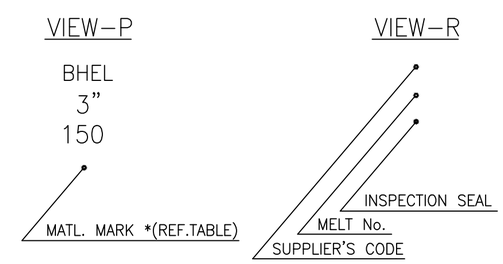

NOTES:–

1. CASTING SHALL COMPLY WITH REQUIREMENTS OF LATEST APPLICABLE QUALITY PROCEDURE.
2. NECESSARY MACHINING ALLOWANCES HAVE BEEN ADDED ON ALL MACHINABLE SURFACES.
3. 100 CASTING SURFACES MUST BE OF HIGH QUALITY WITHOUT SURFACE UNEVENNESS.
4. UNSPECIFIED CASTING RADII R3 TO R5.
5. HEIGHT OF CASTING LETTERS–20mm.
6. ⊗ SURFACES TO BE MACHINED.
7. FINISHED MACHINED DIMENSIONS ARE INDICATED WITHIN BRACKETS.
8. MELT No. & INSPECTION SEAL TO BE PUNCHED REST OF THE DETAILS ARE TO BE CAST.
9. RISER REMAINS ARE TO COMPLETELY REMOVED SUITABLY.
10. # MARKED ITEMS IGC TEST SHALL BE CONDUCTED.
11. HEAT TREATMENT FOR SA995 CD3MN AS PER ASME STANDARD SA–995 TABLE 1

(HEAT TO 2050°F [1120°C] MINIMUM FOR SUFFICIENT TIME TO HEAT CASTING UNIFORMLY TO TEMPERATURE AND WATER QUENCH, OR THE CASTING MAY BE FURNACE COOLED TO 1850°F [1010°C] MINIMUM, HOLD FOR 15 MIN MINIMUM AND THEN WATER QUENCH. A RAPID COOL BY OTHER MEANS MAY BE EMPLOYED IN LIEU OF WATER QUENCH.)

* SPECIAL NOTES:–

1. GUIDE RIB DIMENSIONS TO BE MAINTAINED WITHIN THE TOLERANCES INDICATED
2. BOTH GUIDE RIBS TO BE COPLANER AND TRUELY VERTICAL.
3. PROPER MATCHING FOR GUIDE RIBS WITH MACHINED WEDGE TO BE ENSURED BEFORE ACCEPTING CAST BODIES PREFERABLE AT THE FOUNDARY.
4. THIS DRAWING IS DIMENSIONALLY IDENTICAL TO 1–V–N025–02864R EXCEPT MATERIAL SPECIFICATION.

SECTION–CC

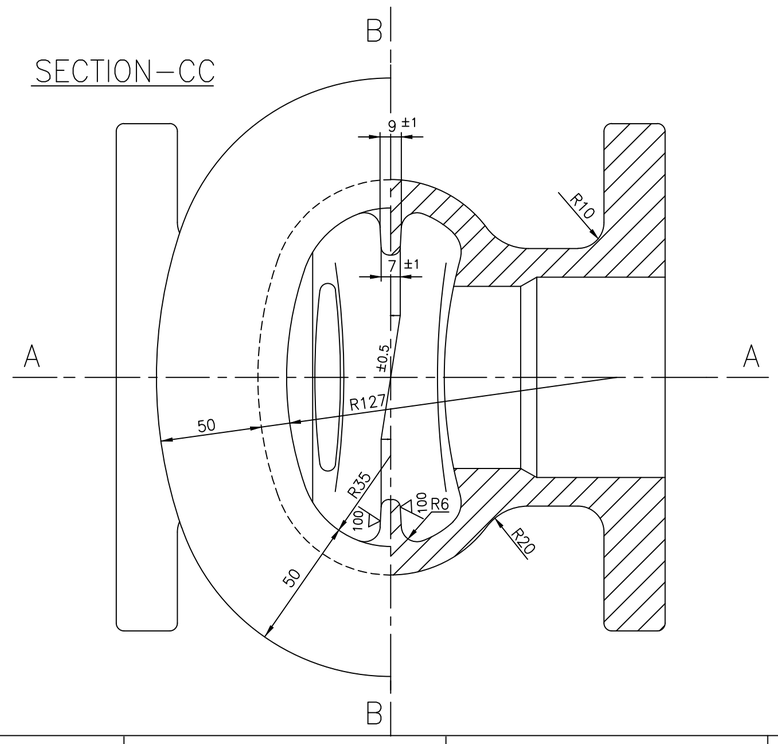

SL No.	DESCRIPTION	MATL CODE	MATL SPECN	HEAT TREATMENT	SCRAP SORT	NET WT (kg)	GROSS WT (kg)	DRAWING No / COMPONENT CODE	ITEM No
06	CD3MN	92 203 856	SA995 Gr.CD3MN ATTEST	REFER NOTE	--	--	--	2VNK6605872R	01
05	CF3M	92 203 846	ASTM A351 CF3M ATTEST	SH	--	--	--	2VNK6105872R	01
# 04	CF8	92 203 541	ASTM A351 CF8 ATTEST	SH	--	--	--	2VU63505872R	01
03	LCB	92 200 886	A352 LCB ATTEST	NR	--	--	--	2VM76805872R	01
02	CF8M	92 200 407	A351 CF8M ATTEST	SH	--	--	--	2VN33805872R	01
01	CF8	92 200 292	ASTM A351 CF8 ATTEST	SH	--	--	--	2VN28605872R	01

REV	DATE	ALTERED	
04	30.05.19	R.P.SINGH	CHD & APPD SSK & KRS
	SL. No. 05 TO 06 INCLUDED.		
03	07.05.18	R.P.SINGH	CHD & APPD SSK & KRS
	SL. No. 04 INCLUDED		
02	14.06.97	T.R.RAMAMURTHY	CHD & APPD A.VISWANATHAN
	SL. No. 03 INCLUDED.		

CAUTION: The information on this document is the property of BHARAT HEAVY ELECTRICALS LTD. It must not be used directly or indirectly in any way detrimental to the interest of the company.

TYPE OF PRODUCT OR NAME OF CUSTOMER/PROJECT

DRAWING REDRAWN WITH REV.02 ON 14.06.1997

BHARAT HEAVY ELECTRICALS LTD.,
UNIT: HIGH PRESSURE BOILER PLANT.
TIRUCHIRAPALLI -620014.
365–120

	NAME	SIGN	DATE	NO.OF VAR.
DRN	K.P.LEON		14.06.97	–
CHD	N.DHANAPAL		14.06.97	
APPD	A.VISWANATHAN		14.06.97	

DEPT VL
CODE 320
SCALE NTS.
WEIGHT (KG). 21.0
REFERENCE INFORMATIONS CAD:C205872R
NO. OF ITEMS –

TITLE
BODY
(3" C150)

CARD CODE U 01

DRAWING NO. 2–V–0000–05872R
REV 04

Size A2

DRAWING NO. 2-V-0000-05937R

ALL DIMENSIONS ARE IN MILLIMETRES. FOR TOLERANCES OF UNTOLERANCED DIMENSIONS DURING MANUFACTURE REFER RELEVANT QCP / QP

SECTION-AA

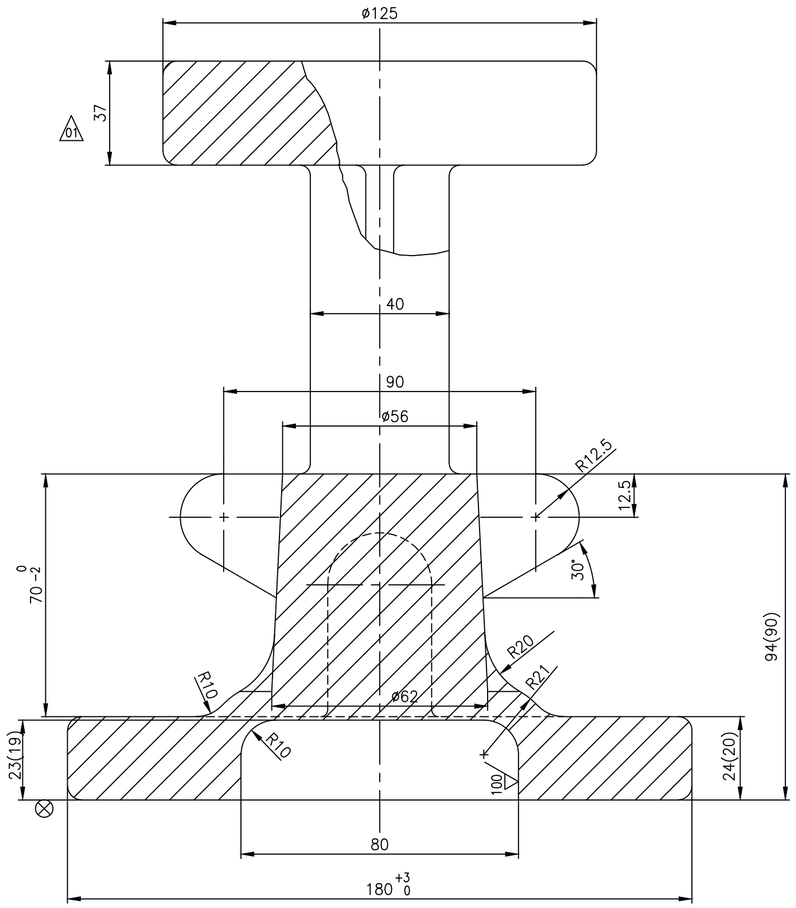

SECTION-BB

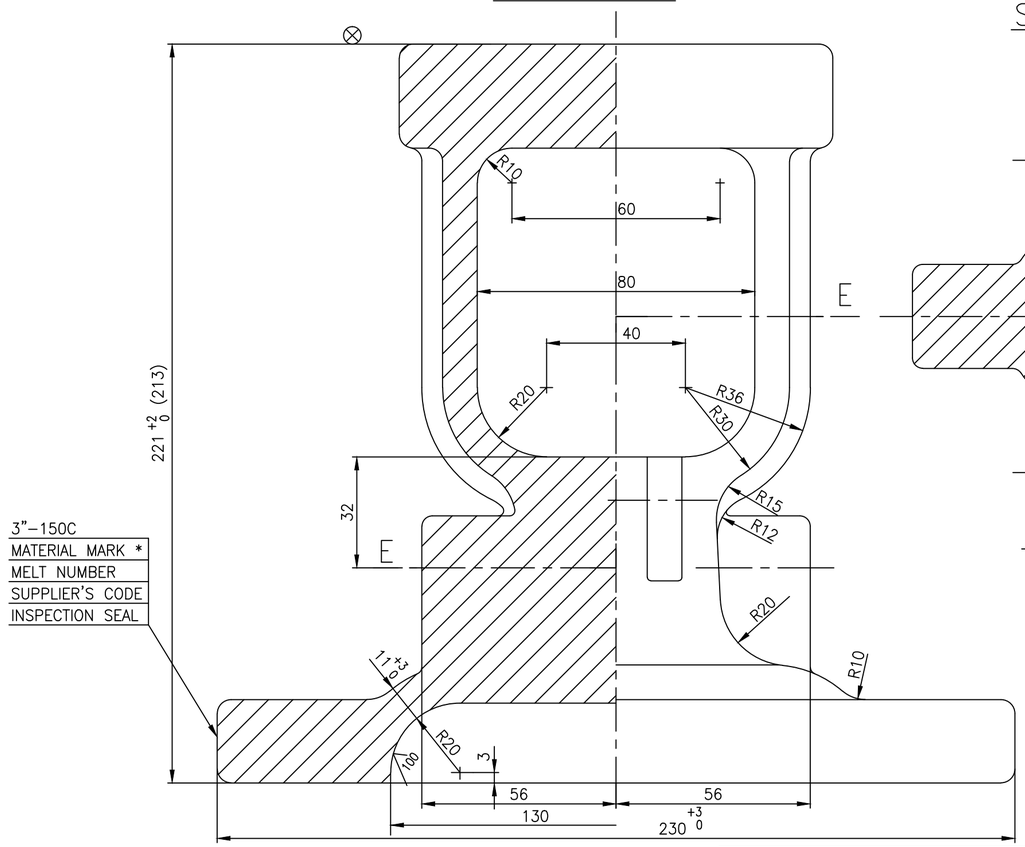

SECTION-EE

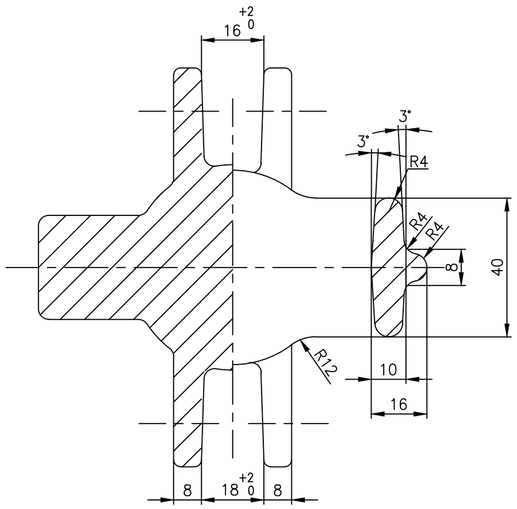

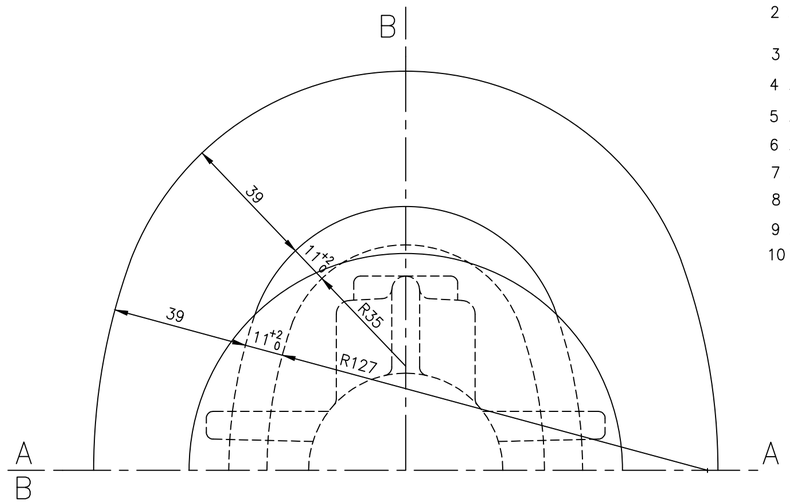

NOTES:

1. NECESSARY MACHINING ALLOWANCES HAVE BEEN ADDED ON ALL MACHINABLE SURFACES
2. FINISHED MACHINED DIMENSIONS ARE INDICATED WITHIN BRACKETS FOR INFORMATION
3. 100 CASTING SURFACES MUST BE HIGH QUALITY WITHOUT SURFACE UNEVENNESS
4. UNSPECIFIED CASTING RADII 3 – 5 MM
5. CASTING SHALL COMPLY WITH THE REQUIREMENTS OF LATEST APPLICABLE QUALITY PROCEDURE.
6. ⊗ SURFACES TO BE MACHINED
7. HEIGHT OF CAST LETTERS 12 MM
8. RISER REMAINS ARE TO BE COMPLETELY REMOVED SUITABLY.
9. # MARKED ITEMS IGC TEST SHALL BE CONDUCTED.
10. HEAT TREATMENT FOR ASTM 995 CD3MN AS PER ASTM STANDARD ASTM-995 TABLE 1 (HEAT TO 2050°F [1120°C] MINIMUM FOR SUFFICIENT TIME TO HEAT CASTING UNIFORMLY TO TEMPERATURE AND WATER QUENCH, OR THE CASTING MAY BE FURNACE COOLED TO 1850°F [1010°C] MINIMUM, HOLD FOR 15 MIN MINIMUM AND THEN WATER QUENCH. A RAPID COOL BY OTHER MEANS MAY BE EMPLOYED IN LIEU OF WATER QUENCH.)

SL No.	DESCRIPTION	MATL CODE	MATL SPECN	HEAT TREATMENT	SCRAP SORT	NET WT (kg)	GROSS WT (kg)	DRAWING No / COMPONENT CODE	ITEM No
10	CD3MN	92 203 857	SA995 CD3MN CERTIFY	REF. NOTE	--	--	--	2.V.NK66.05937R	05
09	CF3M	92 203 847	A351 CF3M CERTIFY	SH	--	--	--	2.V.NK61.05937R	05
# 08	CF8	92 203 552	A351 CF8 CERTIFY	SH	--	--	--	2.V.U635.05937R	05
07	LCB	92 200 892	A352 LCB CERTIFY	NR	--	--	--	2.V.M768.05937R	05
06	CF8M	92 200 590	A351 CF8M CERTIFY	SH	--	--	--	2.V.N338.05937R	05
05	CF8	92 200 589	A351 CF8 CERTIFY	SH	--	--	--	2.V.N286.05937R	05
04	WC9	92 200 588	A217 WC9 CERTIFY	N & T	--	--	--	2.V.N391.05937R	05
03	WC6	92 200 587	A217 WC6 CERTIFY	N & T	--	--	--	2.V.N390.05937R	05
02	WCC	92 200 586	A216 WCC CERTIFY	NORMALISED	--	--	--	2.V.N389.05937R	05
01	WCB	92 200 360	A216 WCB CERTIFY	NORMALISED	--	--	--	2.V.N313.05937R/1	05

REV	DATE	ALTERED R.P.SINGH
05	30.05.19	CHD & APPD SSK & KRS
ZONE		SL. No. 09 & 10 INCLUDED

CAUTION: The information on this document is the property of BHARAT HEAVY ELECTRICALS LTD. It must not be used directly or indirectly in any way detrimental to the interest of the company.

TYPE OF PRODUCT OR NAME OF CUSTOMER/PROJECT

DRAWING REDRAWN WITH REV. 03 ON 17.06.97

BHARAT HEAVY ELECTRICALS LTD., UNIT: HIGH PRESSURE BOILER PLANT. TIRUCHIRAPALLI -620014. 365-120

	NAME	SIGN	DATE	NO.OF VAR.
DRN	R.T.S.GNANAM		17.06.97	
CHD	N.DHANAPAL		17.06.97	
APPD	A.VISWANATHAN		17.06.97	

DEPT VL CODE 320 | SCALE NTS | WEIGHT (KG). 7.5 | REFERENCE INFORMATIONS CAD REF: C205937R | NO. OF ITEMS

TITLE YOKE CUM BONNET (3"-150C GV SG) | CARD CODE U 01 | DRAWING NO. 2-V-0000-05937R | REV 05

Size A2

DRAWING NO. 2-V-0000-13591R

ALL DIMENSIONS ARE IN MILLIMETRES. FOR TOLERANCES OF UNTOLERANCED DIMENSIONS DURING MANUFACTURE REFER RELEVANT QCP / QP

SECTION – AA

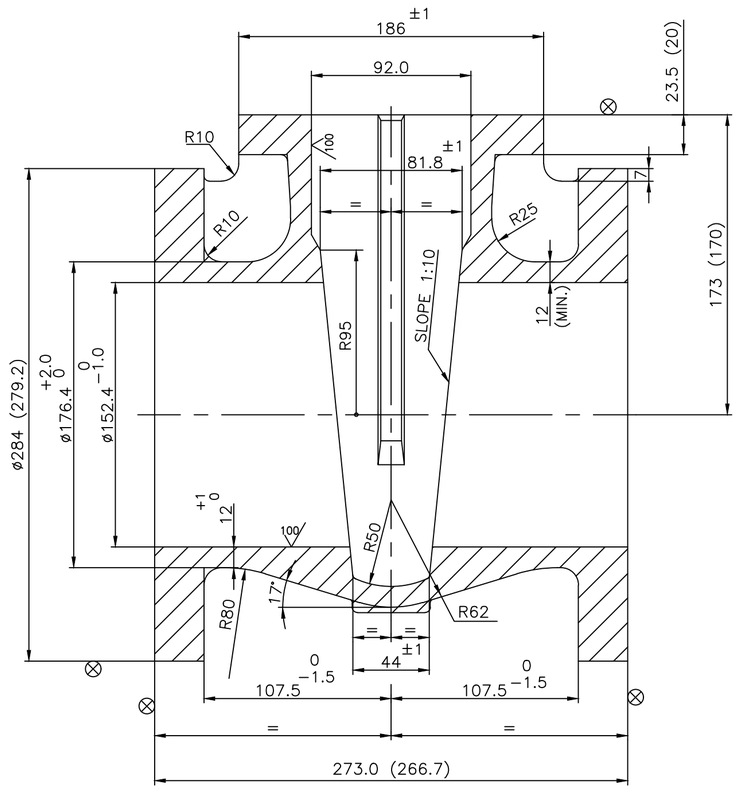

SECTION – BB

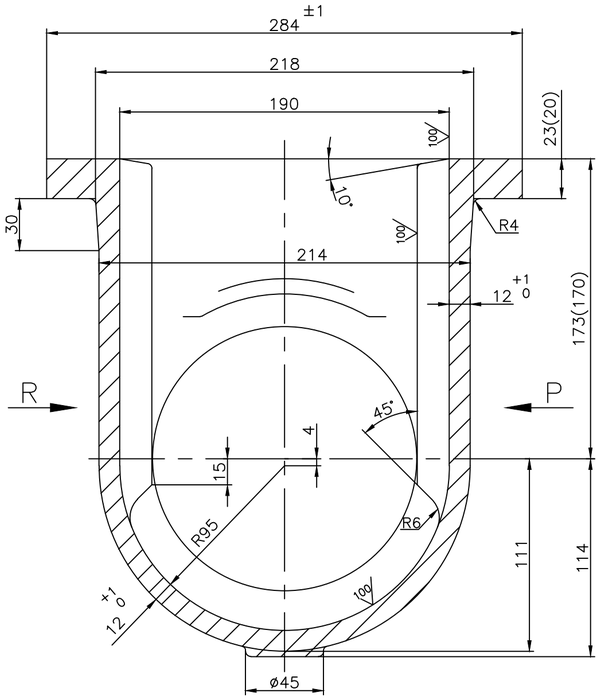

VIEW – P

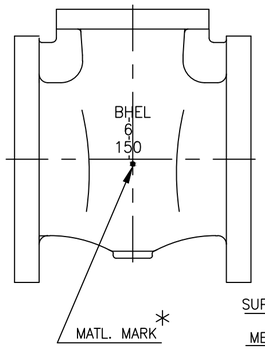

VIEW – Q

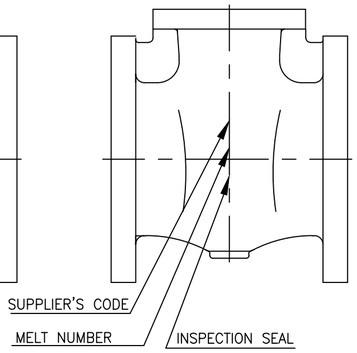

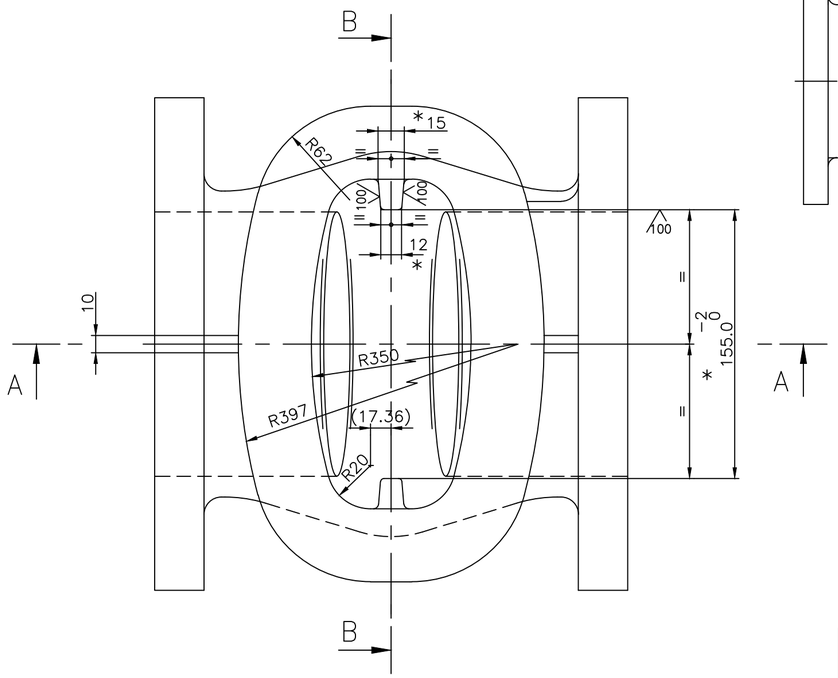

NOTE:–

01. NECESSARY MACHINING ALLOWANCES HAVE BEEN ADDED ON ALL MACHINABLE SURFACES.
02. PERMISSIBLE DEVIATIONS OF NON TOLERANCED CASTING DIMENSIONS REFER APPLICABLE TDC
03. FINISH MACHINED DIMENSIONS ARE INDICATED WITHIN BRACKETS FOR INFORMATION ONLY.
04. LETTERS– BHEL,SIZE,MATL.& SUPPLIERS CODE ARE TO BE CAST IN THE INDICATED ZONE.
05. CASTING SHALL COMPLY WITH THE REQUIREMENTS OF APPLICABLE SPECIFICATION.
06. UNSPECIFIED CASTING RADII = R2 TO R3
07. HEIGHT OF CASTING LETTERS = 12 mm
08. ⊗ INDICATES SURFACE TO BE MACHINED.
09. 100 INDICATED CASTING SURFACES SHALL BE OF HIGH QUALITY WITHOUT SURFACE UNEVENNESS.
10. HEAT TREATMENT FOR SA995 CD3MN AS PER ASME STANDARD SA–995 TABLE 1
    (HEAT TO 2050°F [1120°C] MINIMUM FOR SUFFICIENT TIME TO HEAT CASTING UNIFORMLY TO TEMPERATURE AND WATER QUENCH, OR THE CASTING MAY BE FURNACE COOLED TO 1850°F [1010°C] MINIMUM, HOLD FOR 15 MIN MINIMUM AND THEN WATER QUENCH. A RAPID COOL BY OTHER MEANS MAY BE EMPLOYED IN LIEU OF WATER QUENCH.) SA351 CF8
11. # MARKED ITEMS IGC TEST SHALL BE CONDUCTED.

* SPECIAL NOTE

01. GUIDE BAR DIMENSIONS TO BE MAINTAINED WITHIN THE TOLERENCE INDICATED.
02. BOTH GUIDE RIBS TO BE COPLANAR AND TRUELY VERTICAL.

*MATL. MARK	SL. No.	DESCRIPTION	MATL CODE	MATL SPECN	HEAT TREATMENT	SCRAP SORT	NET WT (kg)	GROSS WT (kg)	DRAWING No / COMPONENT CODE	ITEM No
CF3M	06	CASTING	–	SA351 CF3M ATTESTED	SH	–	42.4	–	2–V–NP76–13591R / 922038490000	001
CF8	#05	CASTING	–	SA351 CF8 ATTESTED	SH	–	42.4	–	2–V–U937–13591R / 922037490000	001
CD3MN	04	CASTING	–	SA995 Gr.CD3MN PRODUCT ATTEST	REFER NOTE	–	42.4	–	2–V–NP33–13591R/1 / 922034940000	001
CF8M	03	CASTING	–	SA351 CF8M ATTESTED	SH	–	42.4	–	2–V–NP27–13591R / 922034830000	001
CF8	02	CASTING	–	SA351 CF8 ATTESTED	SH	–	42.4	–	2–V–NP03–13591R / 922033890000	001
WCB	01	CASTING	–	ASTM A216 WCB– ATTESTED	NORMALISED	–	42.4	–	2–V–NC06–13591R/2 / 922014250000	001

REV	DATE	ALTERED	R.P.SINGH
07	30.05.19	CHD & APPD	SSK & KRS
	SL.No.06 INCLUDED		

REV	DATE	ALTERED	R.P.SINGH
06	08.11.18	CHD & APPD	SSK & KRS
	SL.No.05 INCLUDED NOTE No. 11 INCLUDED		

REV	DATE	ALTERED	R.P.SINGH
05	25.01.18	CHD & APPD	SSK & KRS

ZONE
01. FOR SL.NO.04 MATERIAL SPECIFICATION CHANGED TO CD3MN FORM 6A
02. NOTE SL.NO.10 HEAT TREATMENT PROCESS REVISED

CAUTION: The information on this document is the property of BHARAT HEAVY ELECTRICALS LTD. It must not be used directly or indirectly in any way detrimental to the interest of the company.

TYPE OF PRODUCT OR NAME OF CUSTOMER/PROJECT

DRAWING REDRAWN WITH REV NO 05 ON 25.01.18

BHARAT HEAVY ELECTRICALS LTD.,
UNIT: HIGH PRESSURE BOILER PLANT.
TIRUCHIRAPALLI -620014.
365–120

	NAME	SIGN	DATE	NO.OF VAR.
DRN	M.SRINIVASAN		15.03.04	
CHD	P.BOOMINATHAN		15.03.04	
APPD	K.S.RAMAN		15.03.04	

DEPT VL
CODE 320
SCALE NTS
WEIGHT (KG). REF. TABLE
REFERENCE INFORMATIONS
CAD :C213591R
NO. OF ITEMS

TITLE
BODY
(6" – C150–FL)

CARD CODE U 01

DRAWING NO. 2–V–0000–13591R

REV 07

Size A2

Revisions record:

Rev. 21 – 1) Cl 8 – requirements of test bar added. 2) Cl 7 Table 1 – SV, SRV and QC NRV RT quantum for body casting modified. 3) Isolating valve, product name modified. 4) Cl 8 a) clarity on need for re qualification of castings added. 5) Cl 12 modified to include drawing details, 6) Cl 13.4 A – clarity to submit IBR certificate and MTC added.

Rev. 22- Dt: 26/06/2014 1) Cl 7.0 Table 1 –RT area of QCNRV body revised. 2) Cl.8.0 a) Modified. 3) Sketch of Zones of RT – RT zones of SV and SRV base castings modified based on Engineering review.

Rev. 23 Dt: 06/10/2015: Cl. 2, 4, 5, 6, 7, 8, 13, 15 modified to incorporate API 6D 24th Edition requirements.

Rev 24 Dt: 23/12/2015: Cl 1, 2, 3,5, 6, 7, 8, 9, 10, 13, 14 & 15 modified.

Rev: 25 Dt: 11/02/2017: Cl 1 changed to indicate the use of latest revisions of referred codes, standards, specifications, drawings, procedures, etc; Requirements of API 6D removed from Cl 2, 4, 5, 7, 13 & 15 since the API 6D certificate license was not applied for; Definitions for relevant, linear and rounded indications provided in Cl 7; Cl 2 to 10, 12, 13 & 15 revised to bring better clarity; Type 3.2 certification updated as per BS EN 10204-2004 in Cl 13.2.

Rev: 26 : Dt – 21/02/2018 - SA/ASTM A 995 Gr 4A (CD3MN) added in Cl 1 & 5 based on Engineering/Valves input; Creep testing requirements removed and referred to SIP:RM:01.

1. MATERIAL SPECIFICATIONS:

All the codes, standards, specifications, drawings & procedures, etc., referred in this TDC shall be of latest revision as on the date of Enquiry/Purchase Order, whichever is earlier, unless specified otherwise.

Carbon Steel (CS)	:	SA / ASTM A216 WCB, WCC & 352 LCB, LCC
Alloy Steel (AS)	:	SA / ASTM A217 WC6, WC9, C12A.
Stainless Steel (SS)	:	SA / ASTM A351 CF3M, CF8, CF8C & CF8M; ***SA / ASTM 995 Gr. 4A(CD3MN)***
Additional Requirement	:	As listed below (Supplementary to above material specifications)
Size, Quantity, Grade/Class	:	As per Purchase Order & Drawing / Pattern.

2. CHEMICAL COMPOSITION AND PROCESS:

a) Melting: As per the Specification, Fully Killed.
Carbon= 0.25% maximum: for SA / ASTM A216 WCB only.
Carbon= 0.15% maximum: for SA / ASTM A217 WC6 & WC9 (For the castings used in QCNRV, CRHNRV, TOA Valves & Conventional valves having contours for welding).

Product Analysis on test bar for each melt including residual elements shall be carried out.

b) All raw materials used in steel making including incoming scrap shall be checked by supplier to ensure freedom from radioactivity. (Applicable for SS material only)

c) Tolerance for chemistry shall be as per the above applicable material specifications/standards specified in Cl 1.

3. DIMENSIONS AND TOLERANCES:

Dimensions & their tolerances shall be as per applicable drawings. For untoleranced dimensions: VL: STDC: 023.

4. HEAT TREATMENT (HT):

CS – Castings of High Pressure Valve. (Cl.1500 & above), QCNRV & CRHNRV: Shall be in Annealed Condition.
AS – Castings: Normalized and Tempered.
Normalizing Temperature: SA/ASTM A217 WC6, WC9: 920-950°C and for C12A: 1050-1080°C.
Tempering Temperature: SA/ASTM A217 WC6: 680°C min.; WC9: 720°C min.; C12A: 750-780°C.
All other materials: Heat treatment shall be as per the applicable material specification & grade.

5. MECHANICAL TESTS:

a) Test bars to be cast integral with the casting or separately. If cast separately, they shall be cast at the same time as the castings and from the same ladle. A metal strip with heat number stamped shall be fused with the test bar during casting, to maintain traceability.

If one (1) casting is made from more than one heat, separate test bars for each cast to be poured and all test bars shall satisfy the requirements. Tests mentioned in Table 1 shall be conducted per heat / Heat treatment batch, as per ASTM A370.

Perform tensile tests at room temperature in accordance with the procedures specified in ASTM A370. Perform a minimum of one tensile test. All yield strengths shall be determined using 0.2 % offset method of ASTM A370. The results of the tensile test(s) shall satisfy the applicable material specification requirements. Hardness testing shall be as per ASTM E10 or E18.

If the results of the tensile test(s) do not satisfy the applicable requirements, two additional tests on two additional test specimens (removed from the same TC with no additional heat treatment) may be performed in an effort to qualify the material. The results of each of these tests shall satisfy the applicable requirements.

Table 1.

No	TEST	MATERIAL SPECIFICATIONS			
		SA/ASTM A216, 217	**SA/ASTM A352**	**SA/ASTM A351**	***SA/ASTM A995***
1	Tension Test	As per the Material Specification			
2	Hardness Test	As per the Specification	225 HBW max.	Not applicable	***Not Applicable***
3	Bend Test Specimen 1" x ¾ "	WCB: Bend Angle 90^0, Dia of Pin 2t WCC: 90^0, 2t WC6: 120^0, 3t WC9: 90^0, 3t C12A: 90^0, 2t	Not applicable	S3 of SA703	***Not applicable***
4	Charpy- U Impact for all QCNRV, CRHNRV bodies for IBR.	As per IBR. At Room temperature. Acceptance: Avg /Single=36J/32J min.	Not applicable	Not applicable	***Not applicable***
5	Charpy- V Impact for CE Marking-Pressure Equipment Directive (PED) items as Specified in the Purchase Order.	At 20 Deg.C temperature. Acceptance:Avg/Single=40J/27J min.	As per Specification	Not applicable	***Not applicable***
6	Charpy- V Impact for LPBP bodies	At 20 Deg.C temperature. Acceptance: Avg/Single=27J/21J min.	Not applicable	Not applicable	***Not applicable***

b) ***Creep testing & reporting shall be carried out as per SIP:RM:01 (latest revision) whenever indicated in the Enquiry/Purchase Order/Engineering Drawing.***

6. FETTLING, DRESSING & CLEANING:

- Dressing of castings-Free from risers, in gates, notches, undercuts, deep marks etc.
- Fused wires, parting line fins, chills etc. shall be removed by grinding.
- Gas cutting if employed shall be done before Heat treatment.
- Preheat the material to 200^0C before gas cutting the Alloy steels.
- Castings shall be blast cleaned both inside and outside for the removal of fused sand, scales etc.
- Visual inspection: 100% as per MSS-SP:55. Acceptance: Type 1: none accepted; Type 2-12: A & B only accepted.

7. NON DESTRUCTIVE TESTING (NDT) AFTER HEAT TREATMENT

The NDE requirements for the castings shall meet the following as shown in Table-2 below. Castings shall be free from surface and internal defects like porosity, shrinkage, sand inclusion, crack, cold shut and other harmful defects. All castings shall be of Radiographic Quality.

1. Radiographic Testing Procedure (RT) : As per ASME B 16.34
2. Magnetic Particle Inspection (MPI) : As per ASTM E709
3. Liquid Penetrant Inspection (LPI) : As per ASTM E165

Table: 2

Product	Components	Characteristics	Type of NDE Check				
			RT	**RT Area**	**RT Acc. Std**	**MT $**	**MT Area**
Conventional Valves (Gate, Globe & Check)	Body, Bonnet Pr.part yoke, Cover	< 600 Class	10%#	ASME B 16.34 / On critical area as indicated in the Drawing.	As per Table: 3	--	--
	Body, Bonnet, Cover	600 Class & above	100%			--	
	Body, Bonnet, Cover	1500 Class & above	100%			100%	All accessible surfaces
	Wedge	All Special Class Valves	--	--	--	100%	

							including belly.
Safety Valve	Base	Flanged ends of All Castings	100%	Critical Zones as given in the Drawing/ area shown in the sketch **below**. The areas where RT cannot be carried out MPI shall be done.	Class 2 of ASTM E446 / E186. For Butt weld ends as per Table- 3	100%	All accessible surfaces
		Weld ends of All Castings	100%			--	--
Safety Relief Valve	Base	All	100%			--	--
	Bonnet		10%#				
	SRV Nozzle	All	100%	All area	Class-2 of ASTM E446 / E186.	--	--
QC NRV, CRH NRV	Body	150 & 300 Class	100%	Butt Weld Ends	As per Table: 3	100%	All accessible surfaces including belly.
		600 Class & above	100%	Critical Zones as given in the Drawing/ area shown in the sketch below. The areas where RT cannot be carried out MPI shall be done.	As per Table: 3	100%	
	Body (Special)	All					
Soot Blower Valve	Body	All	10%#	Critical Zones as given in the Drawing/ area shown in the sketch below. The areas where RT cannot be carried out MPI shall be done.	As per Table: 3	--	--
Isolating Valve/ device	Body	< 600 Class	100%	Critical Zones as given in the Drawing/ area shown in the sketch below. The areas where RT cannot be carried out MPI shall be done.	As per Table: 3	--	All accessible surfaces including belly.
		600 Class & above				--	
		1500 Class & above				100%	
LP Bypass Valve	Body	All	100%	Critical Zones as given in the Drawing/ area shown in the sketch below. The areas where RT cannot be carried out MPI shall be done.	As per Table: 3	--	--

$ LPI can be substituted for MPI in all inaccessible area and for stainless steel castings # Refer Cl 7.1

Table: 3

Type Of Discontinuity	**Acceptance Level Category**	**< 600 CLASS**		**≥ 600 CLASS**	
		Thickness ≤2"	**Thickness >2"**	**Thickness ≤2"**	**Thickness >2"**
Gas Porosity	A	A2	A3	A1	A2
Sand/Slag inclusion	B	B3	B3	B2	B2
Shrink Type-1	C	CA2	CA3	CA1	CA2
Shrink Type-2	C	CB3	CB3	CB2	CB2
Shrink Type-3	C	CC3	CC3	CC2	CC2
Crack	D	NONE	NONE	NONE	NONE
Hot Tear	E	NONE	NONE	NONE	NONE
Un-fused Inserts (Chills/Chaplets)	F	NONE	NONE	NONE	NONE

a. Butt welding ends shall be free of shrinkage, crack & hot tear.
b. For butt weld ends Gas hole/Porosity and sand inclusions to be within level A1 &B1 respectively

NDE for SS material: Castings shall be checked for radioactive contamination and reported. Survey meter shall be used to measure near the surface. Acceptance limits: Shall be less than 0.1 milli Rontgen (MR) per hour or 1 micro Sievert per hour.

7.1 # 10% Sampling shall be done as follows: (Wherever specified): The vendor shall select 10% of the Casting from the lot consisting of same size and type, (along with melt number / Sl.nos of the castings covered in the lot) for Radiography. A lot to be specified as the total number of castings as above, supplied in 4 months period (Jan-Apr, May-Aug, Sep-Dec). The vendor shall radiograph these specified castings and incorporate the lot size and meltno and Sl.no in the RT reports along with the other Sl.nos of the other castings covered in the lot.If the identified casting is defective then 2 more castings shall be radiographed.If these 2 castings are defect free then the lot is acceptable.If any one of these castings is defective then all the remaining castings shall be radiographed and all defective areas shall be repaired. BHEL will carry out audit on the lots at th vendor works at any time.

7.2 Surface NDE (MPI & LPI): Testing as per ASME B16.34.

1. **Relevant indication: Surface-rupture NDE indication with major dimensions > 1.6 mm (1/16 in).**
2. **Linear indication: Surface NDE indication whose length is ≥ three times its width.**
3. **Rounded indication: Surface NDE indication whose length is < three times its width.**

Acceptance for MPI & LPI:

4. Cracks are not permitted.
5. For linear indications other than cracks, indications must be separated by a distance greater than the length of an acceptable indication. Maximum allowable length of the indication shall be:
   a) For thickness(t) up to 13mm= 8mm,
   b) For thickness from 13 to 25mm = 13mm
   c) For thickness above 25mm=18mm.
6. For rounded indications, 4 or more indications in a line separated by 1.5 mm or less edge to edge are unacceptable. Maximum allowable diameter of the indication shall be:
   a) For thickness up to 13mm =8mm
   b) For thickness above 13mm =13mm

8. DEVELOPMENT STAGE OF CASTING:

a) During developmental stage, of new castings or change to an existing casting on account of change in dimension which warrants pattern correction, Foundry to ensure, first sample pieces meet dimensional, NDE & Quality requiremnets in this TDC, before starting bulk production. Sample castings, 3 castings with nominal bore (NB) ≤ 100mm. & 1 casting with NB > 100 mm for each type shall be inspected for dimension and RT requirements at BHEL/Vendor works by BHEL personnel. One Test bar for each melt/heat treatment batch shall be supplied along with casting for test at BHEL. RT shall be carried out on entire area of the casting to the acceptance requirement of Table-2 & 3. In addition 100% MPI on all critical areas like change of sections, riser & in gate portions shall be carried out. Casting to be inspected for dimensions after proof machining wherever necessary. If machining operation is invloved the same shall be done and defect free condition shall be ensured. If any defect noticed in RT and machining, the type of defect shall be analyzed and accordingly size of gate, runner, riser and pouring methodolgy to be modified to get defect free casting. Sampling shall be continued till achieving sound casting. After satisfactory development of sampling bulk production shall be started. However weld repaired areas identified in visual examination for doubtful indications to be probed by MPI. Accepted sample castings may be considered for fixing the nominal weight of the castings.

b) During developmental stage RT on sample castings of Yoke, Yoke Clamp & Wedge/Disc shall meet Level-3 of ASTM E446/E186/E280.

c) Radiography not required after satisfactory development of casting & production based on established method for following parts: SRV Bonnet, Disc Holder,Upper and Lower adjusting rings, Packed cap, Cover Plate, Yoke and SRV guide flanges.

9. REPAIR:

Castings with unacceptable cracks, hot tears, shrinkage, etc. to be rectified by grinding & if required by welding. Welding to be done by qualified welder and qualified procedure as per ASME Section IX. For IBR items welders shall be qualified as per IBR.

Guidelines for repair of steel castings shall be as per SIP:VS:17 for activities like defects require/ not require weld repair, welding, Post Weld Heat Treatment, NDE and surface treatment. All repaired areas after PWHT shall be NDE tested and Hardness tested. Hardness shall meet material specification.

For PED (CE-Marking) castings, permanent joining (welding and weld repair) of components must be carried out by suitably qualified personnel according to suitable operating procedures. Also Non-Destructive tests of permanent joints must be carried out by suitable qualified personnel.

The procedures and personnel must be approved by a competent third party which at the manufacturer's discretion, may be - A notified body, - A third party organization recognized by a Member State of European Community.

10. SURFACE TREATMENT:

SS castings to be pickled & passivated (after repair & HT if any) as per ASTM A380. Satisfactory passivity of the surface to be checked using SS passivity test kit (Free iron test). After passivation, rinsing & test, the rinsed demineralised water to be checked for chloride with 1% Silver nitride, which shall not exceed 0.5 PPM.

11. DIMENSIONAL CHECK:

For all QCNRV & CRHNRV Body Castings: Thickness of the body shall be checked throughout the surface on a grid of 100mm x 100mm and recorded & submitted to BHEL.

12. MARKING AND PACKING:

Representation of Marking and identification shall be as per drawing. Also following details to be marked on each casting, on a raised pad using low stress stamps and Castings shall be suitably packed to avoid damage during transit.
1. Foundry code, 2. **Material** specification, grade & **Heat/**melt number, 3. Size and **4.** Class rating.

13. INSPECTION AND CERTIFICATION:

13.1 **For IBR items**:

Products shall be inspected at works and the applicable IBR Form must be countersigned by the Inspecting Authority as indicated below in case the shop/**mill/foundry** is not recognised as a "Well known Foundry" under IBR:

- ❒ **Imported Items:** Inspecting Authority approved by IBR for the Country of origin.
- ❒ **Indigenously Supplied items:** Director of Boilers/Chief Inspector of Boilers/Inspecting Authority approved by IBR, for the respective state.

Certification in IBR Form III-F for IBR items from "IBR-Well Known Foundry" or "Inspecting Authority", as applicable, to be submitted. IBR Form III-F & **separate** Test certificate in English language with following details, shall accompany the product:

1. Purchase Order No. (BHEL), TDC No & its revision no, Test certificate no & date.
2. **Material** Specification, Grade **& Class** with applicable year of code, Heat Number, Quantity & Size
3. Steel making process, Chemistry including incidental elements - Heat wise, Product analysis, Carbon Equivalent (CE).
4. Heat treatment details of the material and test bars.
5. Mechanical test results-Tensile (UTS, YTS **(0.2% offset)**, % elongation, % reduction in area), Impact & Hardness and NDE test results with reference & acceptance standard.
6. Repair details including HT, if any, Cleaning & Surface treatment details.
7. Any other information like clearance of sample casting.
8. Dimensional Inspection Report, where applicable.
9. **For SS:** Measured Radioactivity levels at 5cm from the surface of the castings shall be reported in the Test Certificate stating the measured value at the specified distance (not to be recorded in IBR Form).
10. **Creep test report as per the format suggested in Cl 5 of this TDC (applicable only for IBR application).**

13.2 For PED 2014/68/EU (CE-marking), test certificates of type 3.1 or 3.2, with details specified in Cl 13.1 for separate test certificate, shall be submitted as per BS EN 10204.

- ❒ Type 3.1 – Suppliers shall have ISO 9001-2008/2015 certification certified by Notified Body recognized by European community and test certificate certified by suppliers authorized inspection representative.
- ❒ Type 3.2 – Components inspected and test certificates certified by both the supplier's authorized inspection representative and Notified Body recognized by European community.

14. AUDIT CHECKS AT BHEL:

BHEL reserves the right to carry out audit checks for chemistry, HT condition, mechanical test and NDT on representative test bars or job. Items found defective during check or subsequent processing at BHEL will be rejected.

15. END USE:

For use in valves and other components like flanges, fittings etc. for high temperature & high pressure applications meeting IBR, ASME Section I, ASME B 16.34 and PED 2014/68/EU (CE-marking).

Sketch of zones for RT

SV and SRV Base castings

Base **Bonnet**

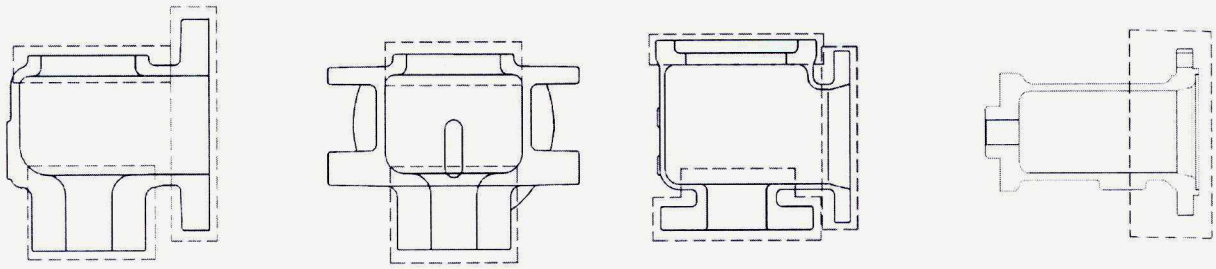

Reheater Isolating Device Body

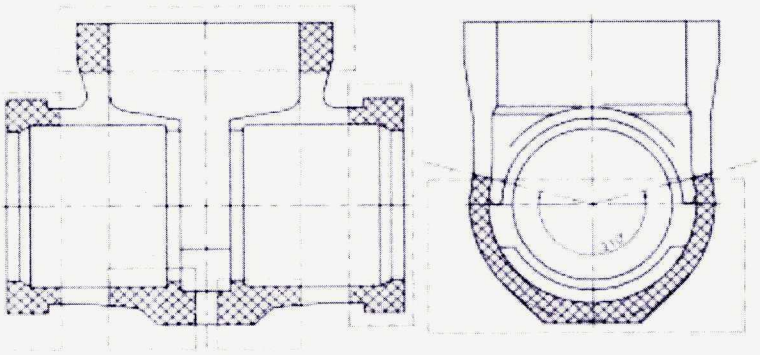

Radiography Area

Soot Blower Valve Body

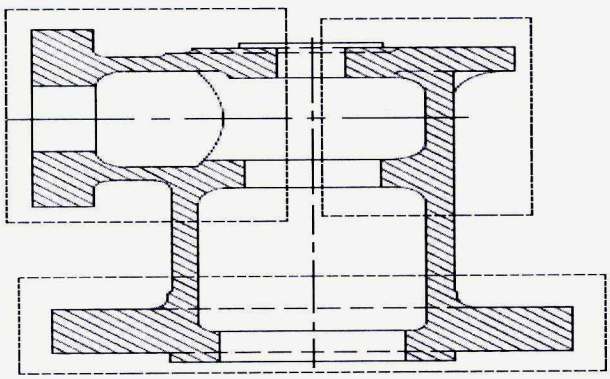

PART CODES : 920243870000, 920131810000, 920243870100, 920131810100

LRD IE, LRD IIE & WB IE – 2.5" 600#

— RADIOGRAPHY AREA

Quick Closing Non Return Valve Body

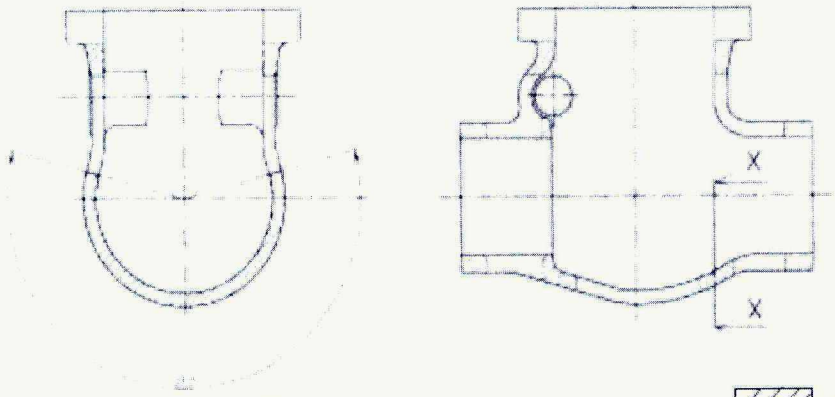

Section-XX

Radiography Area

Cold Reheat Non Return Valve Body

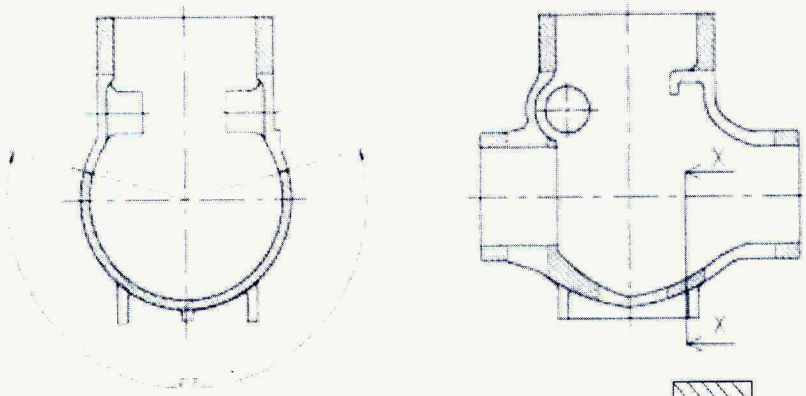

Section-XX

Radiography Area

LP Bypass Stop cum Control Valve Body

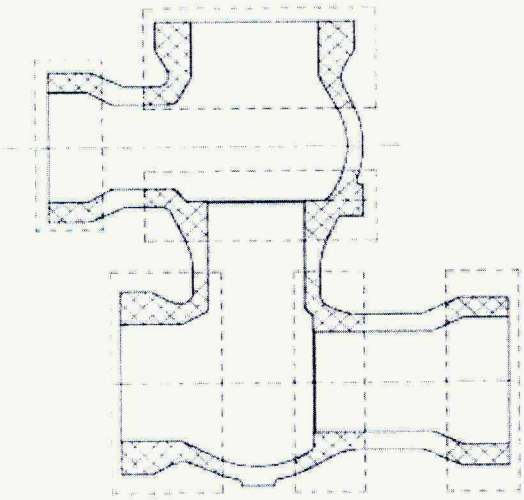

Radiography Area

70-006

Bharat Heavy Electricals Limited

High Pressure Boiler Plant, Tiruchirappalli-620 014. India.

Grams : BHARATELEC
Phone : --
Telex : 0455 - 211, 212, 295 & 296
FAX : 91 - (0431) - 52710

PRODUCT ENGINEERING/VALVES

TDC FOR UNTOLERANCED DIMENSIONS IN CASTING & FORGING DRAWINGS

Scope :

This technical delivery condition specifies the tolerance for the untoleranced dimension for the castings and forgings wherever tolerances are not specified in the applicable drawin applicable material TDC.

A. **Castings :**

Nominal dimension (in mm)				Tolerance on diameter or height (in mm)
UPTO	4			± 0.5
OVER	4	UPTO	16	± 1.0
OVER	16	UPTO	65	± 1.5
OVER	65	UPTO	125	± 2.0
OVER	125	UPTO	250	± 2.5
OVER	250	UPTO	500	± 3.0
OVER	500	UPTO	1000	± 4.0
OVER	1000	UPTO	1600	± 5.0

B. **Forgings :** As per Table (1), (2), & (3) & (4)

PREPARED

CHECKED

APPROVED
(S. KUMAR
SM/PE/VSB)
28/2/94

TABLE 1. LENGTH, WIDTH, HEIGHT, MISMATCH, RESIDUAL FLASH AND TRIMMED FLAT OF DROP, PRESS AND UPSET FORGINGS (NORMAL TOLERANCES)

DROP, PRESS & UPSET FORGINGS – TOLERANCES FOR: LENGTH, WIDTH & HEIGHT*

MISMATCH ; RESIDUAL FLASH & TRIMMED FLAT (* DIA & LENGTH FOR UPSET FORGINGS)

NOTE: CENTRE TO SURFACE; STEP IN ONE DIE; $+\frac{1}{3}, -\frac{1}{3}$ OF TOTAL TOLERANCE

INTERNAL DIMENSION: REVERSE + AND – SIGNS.

MISMATCH	RESIDUAL FLASH (+) TRIMMED FLAT (–)	TRIM LINE: ASYMMETRIC	TRIM LINE: STRAIGHT OR SYMMETRIC	WEIGHT (kg) ABOVE-TO (INCL)	DIFFICULTY OF MATERIAL M1	DIFFICULTY OF MATERIAL M2	COMPLEXITY S1 (>0.63 ≤ 1)	COMPLEXITY S2 (>0.32 ≤ 0.63)	COMPLEXITY S3 (>0.16 ≤ 0.32)	COMPLEXITY S4 (≤ 0.16)
0.4	0.5			0-0.4						
0.5	0.6			0.4-1.0						
0.6	0.7			1.0-1.8						
0.7	0.8			1.8-3.2						
0.8	1			3.2-5.6						
1	1.2			5.6-10						
1.2	1.4			10-20						
1.4	1.7			20-50						
1.7	2			50-120						
2	2.4			120-250						
2.4	2.8									

QUALITY (NORMAL)

MM: ABOVE 0 – TO (INCL) 32	32 – 100	100 – 160	160 – 250	250 – 400	400 – 630	630 – 1000	1000 – 1600	1600 – 2500
$1.1^{+0.7}_{-0.4}$	$1.2^{+0.8}_{-0.4}$	$1.4^{+0.9}_{-0.5}$	$1.6^{+1.1}_{-0.5}$	$1.8^{+1.2}_{-0.6}$	$2^{+1.3}_{-0.7}$			
$1.2^{+0.8}_{-0.4}$	$1.4^{+0.9}_{-0.5}$	$1.6^{+1.1}_{-0.5}$	$1.8^{+1.2}_{-0.6}$	$2^{+1.3}_{-0.7}$	$2.2^{+1.5}_{-0.7}$			
$1.4^{+0.9}_{-0.5}$	$1.6^{+1.1}_{-0.5}$	$1.8^{+1.2}_{-0.6}$	$2^{+1.3}_{-0.7}$	$2.2^{+1.5}_{-0.7}$	$2.5^{+1.7}_{-0.8}$	$2.8^{+1.9}_{-0.9}$		
$1.6^{+1.1}_{-0.5}$	$1.8^{+1.2}_{-0.6}$	$2^{+1.3}_{-0.7}$	$2.2^{+1.5}_{-0.7}$	$2.5^{+1.7}_{-0.8}$	$2.8^{+1.9}_{-0.9}$	$3.2^{+2.1}_{-1.1}$	$3.6^{+2.4}_{-1.2}$	
$1.8^{+1.2}_{-0.6}$	$2^{+1.3}_{-0.7}$	$2.2^{+1.5}_{-0.7}$	$2.5^{+1.7}_{-0.8}$	$2.8^{+1.9}_{-0.9}$	$3.2^{+2.1}_{-1.1}$	$3.6^{+2.4}_{-1.2}$	$4^{+2.7}_{-1.3}$	$4.5^{+3}_{-1.5}$
$2^{+1.3}_{-0.7}$	$2.2^{+1.5}_{-0.7}$	$2.5^{+1.7}_{-0.8}$	$2.8^{+1.9}_{-0.9}$	$3.2^{+2.1}_{-1.1}$	$3.6^{+2.4}_{-1.2}$	$4^{+2.7}_{-1.3}$	$4.5^{+3}_{-1.5}$	$5^{+3.3}_{-1.7}$
$2.2^{+1.5}_{-0.7}$	$2.5^{+1.7}_{-0.8}$	$2.8^{+1.9}_{-0.9}$	$3.2^{+2.1}_{-1.1}$	$3.6^{+2.4}_{-1.2}$	$4^{+2.7}_{-1.3}$	$4.5^{+3}_{-1.5}$	$5^{+3.3}_{-1.7}$	$5.6^{+3.7}_{-1.9}$
$2.5^{+1.7}_{-0.8}$	$2.8^{+1.9}_{-0.9}$	$3.2^{+2.1}_{-1.1}$	$3.6^{+2.4}_{-1.2}$	$4^{+2.7}_{-1.3}$	$4.5^{+3}_{-1.5}$	$5^{+3.3}_{-1.7}$	$5.6^{+3.7}_{-1.9}$	$6.3^{+4.2}_{-2.1}$
$2.8^{+1.9}_{-0.9}$	$3.2^{+2.1}_{-1.1}$	$3.6^{+2.4}_{-1.2}$	$4^{+2.7}_{-1.3}$	$4.5^{+3}_{-1.5}$	$5^{+3.3}_{-1.7}$	$5.6^{+3.7}_{-1.9}$	$6.3^{+4.2}_{-2.1}$	$7^{+4.7}_{-2.3}$
$3.2^{+2.1}_{-1.1}$	$3.6^{+2.4}_{-1.2}$	$4^{+2.7}_{-1.3}$	$4.5^{+3}_{-1.5}$	$5^{+3.3}_{-1.7}$	$5.6^{+3.7}_{-1.9}$	$6.3^{+4.2}_{-2.1}$	$7^{+4.7}_{-2.3}$	$8^{+5.3}_{-2.7}$
$3.6^{+2.4}_{-1.2}$	$4^{+2.7}_{-1.3}$	$4.5^{+3}_{-1.5}$	$5^{+3.3}_{-1.7}$	$5.6^{+3.7}_{-1.9}$	$6.3^{+4.2}_{-2.1}$	$7^{+4.7}_{-2.3}$	$8^{+5.3}_{-2.7}$	9^{+6}_{-3}
$4^{+2.7}_{-1.3}$	$4.5^{+3}_{-1.5}$	$5^{+3.3}_{-1.7}$	$5.6^{+3.7}_{-1.9}$	$6.3^{+4.2}_{-2.1}$	$7^{+4.7}_{-2.3}$	$8^{+5.3}_{-2.7}$	9^{+6}_{-3}	$10^{+6.7}_{-3.3}$
$4.5^{+3}_{-1.5}$	$5^{+3.3}_{-1.7}$	$5.6^{+3.7}_{-1.9}$	$6.3^{+4.2}_{-2.1}$	$7^{+4.7}_{-2.3}$	$8^{+5.3}_{-2.7}$	9^{+6}_{-3}	$10^{+6.7}_{-3.3}$	$11^{+7.3}_{-3.7}$
$5^{+3.3}_{-1.7}$	$5.6^{+3.7}_{-1.9}$	$6.3^{+4.2}_{-2.1}$	$7^{+4.7}_{-2.3}$	$8^{+5.3}_{-2.7}$	9^{+6}_{-3}	$10^{+6.7}_{-3.3}$	$11^{+7.3}_{-3.7}$	12^{+8}_{-4}
$5.6^{+3.7}_{-1.9}$	$6.3^{+4.2}_{-2.1}$	$7^{+4.7}_{-2.3}$	$8^{+5.3}_{-2.7}$	9^{+6}_{-3}	$10^{+6.7}_{-3.3}$	$11^{+7.3}_{-3.7}$	12^{+8}_{-4}	$14^{+9.3}_{-4.7}$

2

TABLE 2 THICKNESS FOR DROP, PRESS AND UPSET FORGINGS AND EJECTOR MARKS FOR DROP AND PRESS FORGINGS (NORMAL TOLERANCES)

DROP, PRESS & UPSET FORGINGS – TOLERANCES FOR: THICKNESS; EJECTOR MARKS*

*(DROP AND PRESS FORGINGS ONLY)

EJECTOR MARKS	WEIGHT (kg) ABOVE – TO (INCL)	DIFFICULTY OF MATERIAL M1	M2	COMPLEXITY S1 > 0·63 ≤ 1	S2 > 0·32 ≤ 0·63	S3 > 0·16 ≤ 0·32	S4 ≤ 0·16	MM 0 ABOVE – 16 TO (INCL)	16 – 40	40 – 63	63 – 100	100 – 160	160 – 250	> 250
1	0-0·4							1 $^{+0.7}_{-0.3}$	1·1 $^{+0.7}_{-0.4}$	1·2 $^{+0.8}_{-0.4}$	1·4 $^{+0.9}_{-0.5}$	1·6 $^{+1.1}_{-0.5}$	1·8 $^{+1.3}_{-0.6}$	2 $^{+1.5}_{-0.7}$
1·2	0·4-1·2							1·1 $^{+0.7}_{-0.4}$	1·2 $^{+0.8}_{-0.4}$	1·4 $^{+0.9}_{-0.5}$	1·6 $^{+1.1}_{-0.5}$	1·8 $^{+1.3}_{-0.6}$	2 $^{+1.5}_{-0.7}$	2·2 $^{+1.6}_{-0.7}$
1·6	1·2-2·5							1·2 $^{+0.8}_{-0.4}$	1·4 $^{+0.9}_{-0.5}$	1·6 $^{+1.1}_{-0.5}$	1·8 $^{+1.3}_{-0.6}$	2 $^{+1.5}_{-0.7}$	2·2 $^{+1.6}_{-0.7}$	2·5 $^{+1.7}_{-0.8}$
2	2·5-5							1·4 $^{+0.9}_{-0.5}$	1·6 $^{+1.1}_{-0.5}$	1·8 $^{+1.2}_{-0.6}$	2 $^{+1.5}_{-0.7}$	2·2 $^{+1.6}_{-0.7}$	2·5 $^{+1.7}_{-0.8}$	2·8 $^{+1.9}_{-0.9}$
2·4	5-8							1·6 $^{+1.1}_{-0.5}$	1·8 $^{+1.2}_{-0.6}$	2 $^{+1.5}_{-0.7}$	2·2 $^{+1.6}_{-0.7}$	2·5 $^{+1.7}_{-0.8}$	2·8 $^{+1.9}_{-0.9}$	3·2 $^{+2.1}_{-1.1}$
3·2	8-12							1·8 $^{+1.2}_{-0.6}$	2 $^{+1.5}_{-0.7}$	2·2 $^{+1.6}_{-0.7}$	2·5 $^{+1.7}_{-0.8}$	2·8 $^{+1.9}_{-0.9}$	3·2 $^{+2.1}_{-1.1}$	3·6 $^{+2.4}_{-1.2}$
4	12-20							2 $^{+1.5}_{-0.7}$	2·2 $^{+1.6}_{-0.7}$	2·5 $^{+1.7}_{-0.8}$	2·8 $^{+1.9}_{-0.9}$	3·2 $^{+2.1}_{-1.1}$	3·6 $^{+2.4}_{-1.2}$	4 $^{+2.7}_{-1.3}$
5	20-36							2·2 $^{+1.6}_{-0.7}$	2·5 $^{+1.7}_{-0.8}$	2·8 $^{+1.9}_{-0.9}$	3·2 $^{+2.1}_{-1.1}$	3·6 $^{+2.4}_{-1.2}$	4 $^{+2.7}_{-1.3}$	4·5 $^{+3}_{-1.5}$
6·4	36-63							2·5 $^{+1.7}_{-0.8}$	2·8 $^{+1.9}_{-0.9}$	3·2 $^{+2.1}_{-1.1}$	3·6 $^{+2.4}_{-1.2}$	4 $^{+2.7}_{-1.3}$	4·5 $^{+3}_{-1.5}$	5 $^{+3.3}_{-1.7}$
8	63-110							2·8 $^{+1.9}_{-0.9}$	3·2 $^{+2.1}_{-1.1}$	3·6 $^{+2.4}_{-1.2}$	4 $^{+2.7}_{-1.3}$	4·5 $^{+3}_{-1.5}$	5 $^{+3.3}_{-1.7}$	5·6 $^{+3.7}_{-1.9}$
10	110-200							3·2 $^{+2.1}_{-1.1}$	3·6 $^{+2.4}_{-1.2}$	4 $^{+2.7}_{-1.3}$	4·5 $^{+3}_{-1.5}$	5 $^{+3.3}_{-1.7}$	5·6 $^{+3.7}_{-1.9}$	6·3 $^{+4.2}_{-2.1}$
12·6	200-250							3·6 $^{+2.4}_{-1.2}$	4 $^{+2.7}_{-1.3}$	4·5 $^{+3}_{-1.5}$	5 $^{+3.3}_{-1.7}$	5·6 $^{+3.7}_{-1.9}$	6·3 $^{+4.2}_{-2.1}$	7 $^{+4.7}_{-2.3}$
								4 $^{+2.7}_{-1.3}$	4·5 $^{+3}_{-1.5}$	5 $^{+3.3}_{-1.7}$	5·6 $^{+3.7}_{-1.9}$	6·3 $^{+4.2}_{-2.1}$	7 $^{+4.7}_{-2.3}$	8 $^{+5.3}_{-2.7}$
								4·5 $^{+3}_{-1.5}$	5 $^{+3.3}_{-1.7}$	5·6 $^{+3.7}_{-1.9}$	6·3 $^{+4.2}_{-2.1}$	7 $^{+4.7}_{-2.3}$	8 $^{+5.3}_{-2.7}$	9 $^{+6}_{-3}$
								5 $^{+3.3}_{-1.7}$	5·6 $^{+3.7}_{-1.9}$	6·3 $^{+4.2}_{-2.1}$	7 $^{+4.7}_{-2.3}$	8 $^{+5.3}_{-2.7}$	9 $^{+6}_{-3}$	10 $^{+6.7}_{-3.3}$
								5·6 $^{+3.7}_{-1.9}$	6·3 $^{+4.2}_{-2.1}$	7 $^{+4.7}_{-2.3}$	8 $^{+5.3}_{-2.7}$	9 $^{+6}_{-3}$	10 $^{+6.7}_{-3.3}$	11 $^{+7.3}_{-3.7}$
								6·3 $^{+4.2}_{-2.1}$	7 $^{+4.7}_{-2.3}$	8 $^{+5.3}_{-2.7}$	9 $^{+6}_{-3}$	10 $^{+6.7}_{-3.3}$	11 $^{+7.3}_{-3.7}$	12 $^{+8}_{-4}$

QUALITY (NORMAL)

TABLE 3 STRAIGHTNESS, FLATNESS AND CENTRE TO CENTRE DIMENSIONS FOR DROP, PRESS AND UPSET FORGINGS

DROP, PRESS AND UPSET FORGINGS

NOTE. QUALITY E DOES NOT APPLY TO UPSET FORGINGS

RANGE OF TOLERANCES FOR STRAIGHTNESS AND FLATNESS

LENGTH ABOVE TO (INCL)		MM														
		0 100	100 125	125 160	160 200	200 250	250 315	315 400	400 500	500 630	630 800	800 1000	1000 1250	1250 1600	1600 2000	2000 2500
QUALITY	NORMAL	0·6	0·7	0·8	0·9	1	1·1	1·2	1·4	1·6	1·8	2	2·2	2·5	2·8	3·2

RANGE OF TOLERANCES FOR CENTRE TO CENTRE DIMENSIONS

LENGTH ABOVE TO (INCL)		MM										
		0 100	100 160	160 200	200 250	250 315	315 400	400 500	500 630	630 800	800 1000	1000 1250
QUALITY	NORMAL	±0·3 0·6	±0·4 0·8	±0·5 1	±0·6 1·2	±0·8 1·6	±1 2	±1·2 2·4	±1·6 3·2	±2 4	±2·5 5	±3·2 6·4

TABLE 4 FILLET, EDGE RADII AND BURRS FOR DROP, PRESS AND UPSET FORGINGS

DROP, PRESS AND UPSET FORGINGS

FILLET AND EDGE RADII TOLERANCES

r MM ABOVE – TO (INCL)	+	–
0 – 10	50%	25%
10 – 32	40%	20%
32 – 100	32%	15%
> 100	25%	10%

BURR TOLERANCES
(AND PARTING LINE FINS FOR UPSET FORGINGS)

WEIGHT (kg) ABOVE – TO (INCL)	a	b
0 – 1	1	0·5
1 – 6	1·6	0·8
6 – 40	2·5	1·2
40 – 250	4	2

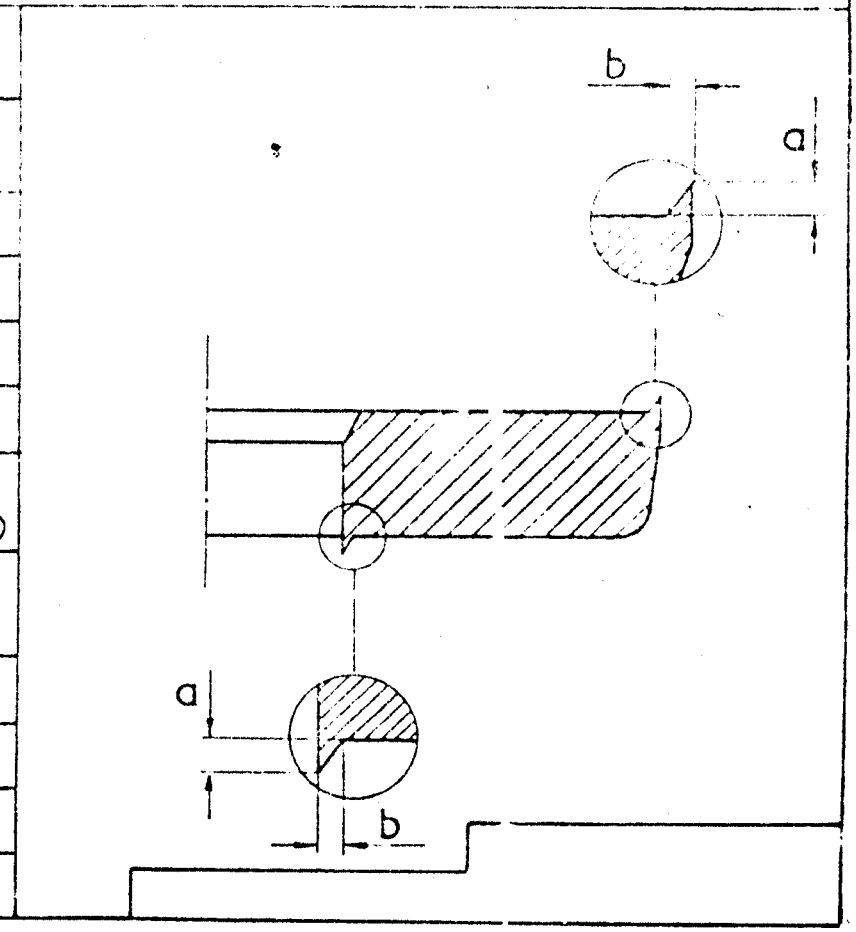

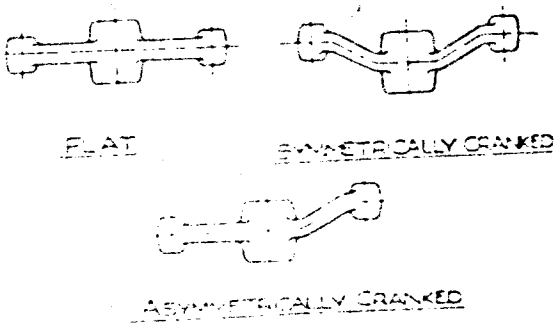

Fig. 1. Die lines

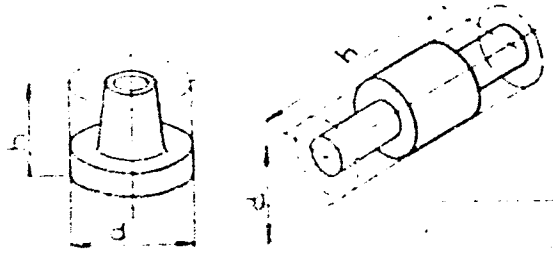

Fig. 2. Enveloping shapes of circular forgings

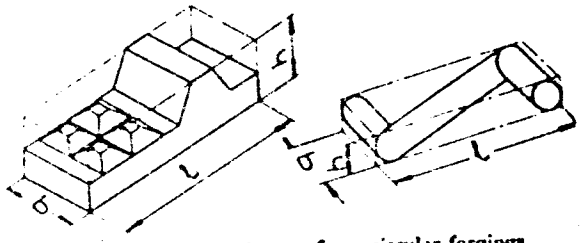

Fig. 3. Enveloping shapes of non-circular forgings

NOTE :

1. The type of steel used is determined as falling within one of the following categories :

   a. M1 - steel with carbon content not more than 0.65% and total of specified alloying elements not more than 5

   b. M2 - steel with carbon content above 0.65% or total of specified alloying elements above 5%.

2. Complexity factor of a forging is the ratio of the weight of the forging to the weight of the overall shape necessary to accommodate the maximum dimensions of the forging.

The resulting complexity factor is determined as falling within one of the following categories :

S4 - Upto and including 0.16

S3 - Above 0.16 upto and including 0.32

S2 - Above 0.32 upto and including 0.63

S1 - Above 0.63 upto and including 1.00

Annexure - I

Certificate by Chartered Accountant on letter head

This is to Certify that M/S ....., (hereinafter referred to as 'company') having its registered office at ..... is registered under MSMED Act 2006, (Entrepreneur Memorandum No (Part–II) ..... dtd:....., Category: ..... (Micro/Small)). (Copy enclosed).

Further verified from the Books of Accounts that the investment of the company as per the latest audited financial year ..... as per MSMED Act 2006 is as follows:

1. **For Manufacturing Enterprises:** Investment in plant and machinery (i.e. original cost excluding land and building and the items specified by the Ministry of Small Scale Industries vide its notification No.S.O.1722(E) dated October 5, 2006 :
   Rs.....Lacs
2. **For Service Enterprises:** Investment in equipment (original cost excluding land and building and furniture, fittings and other items not directly related to the service rendered or as may be notified under the MSMED Act, 2006:
   Rs.....Lacs

(Strike off whichever is not applicable)

The above investment of Rs.....Lacs is within permissible limit of Rs.....Lacs for .....Micro / Small **(Strike off which is not applicable)** Category under MSMED Act 2006.

Or

The company has been graduated from its original category (Micro/ Small) **(Strike off which is not applicable)** and the date of graduation of such enterprise from its original category is ..... (dd/mm/yyyy) which is within the period of 3 years from the date of graduation of such enterprise from its original category as notified vide S.O. No. 3322(E) dated 01.11.2013 published in the gazette notification dated 04.11.2013 by Ministry of MSME.

Date:

(Signature)

Name -

Membership number -

Seal of Chartered Accountant

1.0 MATERIAL:

Specification : ASME / ASTM {Latest on date of Purchase Order (PO)}:
CARBON STEEL (CS) : SA / ASTM A216 WCB, WCC & 352 LCB , LCC
ALLOY STEEL (AS) : SA / ASTM A217 WC6, WC9, C12A.
STAINLESS STEEL (SS): SA / ASTM A351 CF3M,CF8,CF8C & CF8M.
Additional Requirement : As listed below(Supplementary to Specification)
Size, Qty, Grade/Class : As per Purchase order & Drawing / Pattern.

2.0 CHEMICAL COMPOSITION AND PROCESS:

Melting: As per the Specification, Fully Killed.
Carbon= 0.25% maximum : for SA / ASTM A216 WCB only.
Carbon= 0.15% maximum : for SA / ASTM A217 WC6 & WC9
Product Analysis on test bar for each melt including residual elements shall be carried out and reported in Test Certificates.

In case of API-6D materials the following additional requirements shall be met:

CS: Carbon=0.23% max.(in ladle) and 0.25% max.(in Product analysis)
Carbon Equivalent=0.43 max.(in ladle) and 0.45 max.(in Product analysis)
Carbon Equivalent=%C+(%Mn/6)+(%Cr+%Mo+%V)/5+(%Ni+%Cu)/15
SS: Carbon=0.03% max. except as below.
Carbon=0.08% max.for stabilized steels with Nb >10xC.and
for stabilized steels with Nb and Ta mass of (Nb+Ta)>8xC.
.

3.0 DIMENSIONS AND TOLERANCES:

Tolerances as per the Drawing.
Non tolerance Dimensions for valve components as per the Drawing:VL:STDC:023 (Latest)

4.0 HEAT TREATMENT :(HT)

CS. Castings of High Pressure Valve.(Cl.1500 & above),QCNRV & CRHNRV: Shall be in Annealed Condition.
AS. Castings: Normalized and Tempered.
SA/ASTM A217 WC6 :Normalizing Temperature 920-950 ºC and Tempering Tempareture 680 ºC (Minimum)
SA/ASTM A217 WC9 :Normalizing Temperature 920-950 ºC and Tempering Tempareture 720 ºC (Minimum)
SA/ASTM A217 C12A: Normalizing Temperature 1050-1080 ºC and Tempering temperature 750-780ºC
Others: Heat Treat as per the Specification.

5.0 MECHANICAL TESTS:

Test bars to be cast integral with the casting or separately. If cast separately, they shall be cast at the same time as the castings and from the same ladle. A metal strip with heat number stamped shall be fused with the test bar during casting, to maintain traceability. If one(1) casting is made from more than one heat, separate test bars for each heat/cast to be poured & all test bars shall satisfy the requirements. Following tests to be conducted per heat / Heat treatment batch, as per ASTM A370. .

S. NO	TEST	Material specification				
		SA/ASTM A216, 217			SA/ASTM A352	SA/ASTM A 351
1	Tension Test	As per the Specification				
2	Hardness Test	As per the Specification			225 BHN. max.	Not applicable
3	Bend Test Specimen 1"x ¾"		Angle of Bend	Dia of Pin	Not applicable	S3 of SA703
		WCB	90º	2t		
		WCC	90º	2t		
		WC6	120º	3t		
		WC9	90º	3t		
		C12A	90º	2t		
4	Charpy- U Impact for all Quick Closing Non-Return Valve, Cold Re-Heat Non-Return Valve Bodies FOR IBR.	As per IBR. at Room temperature. Acceptance: Avg /Single=36J/32J min.			Not applicable	Not applicable
5	Charpy- V Impact for Low-Pressure Bye-pass Valve BODIES.	At 20 Deg.C temperature. Acceptance: Avg /Single=27J/21J min.			Not applicable	Not applicable

In addition to above IMPACT Test for API -6D and PED Valves shall be done as below

S. NO	TEST	Material specification		
		SA/ASTM A216, 217	SA/ASTM A352	SA/ASTM A 351
1	Charpy- V Impact for CE Marking-Pressure Equipment Directive (PED) items as Specified in the Purchase Order.	At 20 Deg.C temperature. Acceptance: Avg /Single=40J/27J min.	As per Specification	Not applicable
2	Charpy- V Impact for API -6D items if design temperature below minus 29ºC (-29 ºC)	Test Temperature=As per specification Acceptance: Avg/Single=34J/25J	As per Specification	Not applicable

6.0 FETTLING, DRESSING & CLEANING:

- Dressing of castings- Free from risers, in gates, notches, undercuts and deep marks etc.
- Fused wires, parting line fins, chills etc. shall be removed by grinding.
- Gas cutting if employed shall be done before Heat treatment.
- Preheat the material to 200 Deg. C. before gas cutting the Alloy steels.
- Castings shall be blast cleaned both inside and outside for the removal of fused sand, scales etc.
- Visual inspection of castings for surface quality as per MSS-SP-55 shall be carried out.

7.0 NON DESTRUCTIVE TESTING (NDT) AFTER HEAT TREATMENT:

The NDE requirements for the castings shall meet the following as shown in Table-1 below. Castings shall be free from surface and internal defects like porosity, shrinkage, sand inclusion, crack, cold shut and other harmful defects. All castings shall be of Radiographic Quality.

Radiographic Testing Procedure: As per ASME B16.34.
Magnetic Particle Inspection (MPI): As per ASTM E709
Liquid Penetrant Inspection (LPI): As per ASTM E165

Table: 1

Product	Components	Charecteristics	Type of NDE Check				
			RT	RT Area	RT Acc. Std	MT $	MT Area
Conventional Valves (Gate, Globe & Check) and API 6D Gate Valves	Body,Bonnet	< 600Class	10%	ASME B16.34 (latest) as per SPL class Valve RT requirement	As per Table: 2	--	--
	Body,Bonnet	600Class & above	100%			--	
	Body,Bonnet & Wedge	1500Class & above	100%			100%	All accessible surfaces including belly
		All Special Class Valves	100%			100%	
Quick Closing Non-Return Valve & Cold Re-Heat Non-Return Valve	Body	150 & 300 Class	10%	Butt Weld Ends, Change of sections including seat and neck portion	As per Table: 2	100%	All accessible surfaces including belly
		600Class & above	100%		As per Table: 2	100%	All accessible surfaces .
	Body (Special)	150 & 300 Class					
		600Class & above					
CRH Isolating Device	Body	< 600Class	100%	ASME B16.34 (latest) as per SPL class Valve RT requirement.	As per Table: 2	--	All accessible surfaces including belly
		600Class & above				--	
		1500Class & above				100%	
$ LPI Can be substituted for MPI in all inaccessible area and for stainless steel castings.							

Table: 2

TYPE OF DISCONTINUITY	ACCEPTANCE LEVEL CATEGORY	< 600 CLASS		≥ 600 CLASS	
		Thickness ≤2"	Thickness >2"	Thickness ≤2"	Thickness >2"
Gas Porosity	A	A2	A3	A1	A2
Sand/Slag inclusion	B	B3	B3	B2	B2
Shrink Type-1	C	CA2	CA3	CA1	CA2
Shrink Type-2	C	CB3	CB3	CB2	CB2
Shrink Type-3	C	CC3	CC3	CC2	CC2
Crack	D	NONE	NONE	NONE	NONE
Hot Tear	E	NONE	NONE	NONE	NONE
Unfused Inserts (Chills/Chaplets)	F	NONE	NONE	NONE	NONE

a. **Butt welding ends shall be free of shrinkage, crack & hot tear.**
b. **For butt weld ends Gas hole/Porosity and sand inclusions to be within level A1 &B1 respectively**

7.1 **Acceptance for MPI & LPI:** ASME B16.34.

(1)Cracks are not permitted.

(2)For linear indications (with length > 3 times width) other than cracks,indications must be separated by a distance greater than the length of an acceptable indication. Maximum allowable length of the indication shall be:
(a) For thickness (t) up to 13mm= 8mm,
(b) For thickness from 13 to 25mm = 13mm
(c) For thickness above 25mm =18mm.

(3)For rounded indications (circular or elliptical with length < 3 times width), 4 or more indications in a line separated by 1.5 mm or less edge to edge are unacceptable. Maximum allowable diameter of the indication shall be:
(a)For thickness up to 13mm =8mm, and (b)For thickness above 13mm =13mm

8.0 Development Stage of Casting:

a. During developmental stage, RT on sample castings (3 Castings with nominal bore (NB) ≤100mm. & 1 casting with NB > 100mm) for each type of casting shall be carried out on entire area of the casting to the acceptance requirement of Table-1 & 2. In addition 100% MPI on all critical areas like change of sections, riser & in gate portions shall be carried out. If machining operation is involved the same shall be done and defect free condition shall be ensured. If any defect noticed in RT and machining, the type of defect shall be analysed and accordingly size of gate, runner, riser and pouring methodology to be modified to get defect free casting. Sampling shall be continued till achieving sound casting. After satisfactory development of sampling bulk production shall be started. However weld repaired areas identified in visual examination for doubtful indications to be probed by MPI.

b. During developmental stage RT on sample castings of yoke, yoke clamp & wedge/disc shall meet Level-3 of ASTM E446/E186/E280

9.0 REPAIR:

Castings with unacceptable cracks, hot tears, shrinkage, etc. to be rectified by grinding & if required by welding. Welding to be done by qualified welder and the procedure used for welding shall be qualified in accordance with ASTM A 488/ASME Section IX.

.For IBR items welder shall be qualified as per IBR and approved by IBR approved Inspecting Authority.

The welding consumables and parameters shall be as per the qualified procedures. The recommended welding consumables are given in Table below.

Casting Material	Electrode Specification	Minimum Preheat in ° C	Minimum Post heat Temperature in ° C	PWHT Temperature in ° C
A 216 WCB, A 216 WCC	E 7018 - A1	150	150 for 2 hours	595 to 625
A 217 WC6	E 8018 B2	220	220 for 2 hours	650 to 680
A 217 WC9, A 217 C5, CSN 422744	E 9018 B3	220	220 for 2 hours	675 to 705
A 217 C12A	E 9015 B9 E 9018 B9 Ref Note - 1	220-280	220-280 for 2 hrs	750 to 770
A 217 CA15	E 410	220	220 for 2 hours	760 to 790
A 351 CF3M, A 351 CF8M	E 316	Nil	Nil	Nil
A 351 CF8, A 351 CF8C	E 347	Nil	Nil	Nil

Note – 1:

A. The following welding filler materials only shall be used.
Cromocord 9 M (Oerlikon)
Fox C 9 MV (Bohler)
Cromo 9V (Thyssen)

B. C12A castings to be Post weld heat treated irrespective of depth or size of repair

9.1 All repaired areas after PWHT shall be subjected to NDE and Hardness test. Hardness shall meet material Specification. (If Specified)

10.0 SURFACE TREATMENT:

SS castings to be pickled & passivated (after repair & HT if any) as per ASTM A380. Satisfactory passivity of the surface to be checked using SS passivity test kit (Free iron test). After passivation, rinsing & test, the rinsed demineralised water to be checked for chloride with 1% Silver nitride, which shall not exceed 0.5 PPM

11.0 DIMENSIONAL CHECK:

a. Dimensional reports for Sample castings and for All fully Machined castings are to be furnished along with other Certificates.
b. For all QCNRV & CRHNRV Body Castings, thickness of the body shall be checked on throughout the surface on a grid of 100mm x 100mm and recorded & reports to be submitted to BHEL.

12.0 MARKING AND PACKING:

Following details to be marked on each casting on a raised pad using low stress stamps and Castings shall be suitably packed to avoid damage during transit.

1. Foundry code, 2.Specification, grade & Melt number, 3.Other details as per drawing.

13.0 INSPECTION AND CERTIFICATION:

13.1: For IBR items

a) If the Foundry is recognized as "Well known Foundry" under IBR, Items shall be inspected by foundry and works certificate along with IBR *Form III F* shall be issued.
b) If the Foundry is not recognized as "Well known Foundry" under IBR, Items shall be inspected by an Inspecting Authority approved by IBR and work certificate along with IBR *Form III G* shall be issued.

13.2: For CE-marking items the materails shall be inspected by M/s. LLoyd's/ TUV/ BVQI or anyother agengy approved for PED of CEmarking, if the foundry is not certified to ISO 9000 by any of the . above organisation.

13.3 For API items, the castings shall be inspected by the foundry and works certificate with details like PSL No., Temperature class rating, size shall be issued.

13.4 Test certificates shall contain the following details.

1.Purchase Order No.(BHEL),TDC No. & Test certificate number
2. Specification and Grade with applicable year of code, Heat Number, Quantity & Size
3. Steel making process, Chemistry including incidental elements - Heat wise.
4. Heat treatment details of the material and test bars.
5. Mechanical test results, NDE test results with reference & acceptance standard.
6. Repair details including HT, if any, Cleaning & Surface treatment details.
7. Any other information like clearance of sample casting.
8. Dimensional Inspection Report where applicable.

14.0 AUDIT CHECKS AT BHEL:

BHEL reserves the right to carry out audit checks for chemistry, HT condition, mechanical test and NDT on representative test bars or job. Items found defective during check or subsequent processing at BHEL are liable for rejection.

15.0 END USE:

For use in valves and other components like flanges, fittings etc. for high temperature & high pressure applications meeting IBR, ASME Section I, ASME B 16.34, PED and API.

D.SUDHAKARAN QA	M.RAJAKUMAR ENGG/VALVES	S.SELVARAJAN QUALITY ASSUARANCE	V.RAVIKUMAR QUALITY ASSURANCE
PREPARED BY	REVIEWED BY		APPROVED BY

Annexure-E

.(TO BE STAMPED IN ACCORDANCE WITH STAMP ACT AND THE EXPIRY DATE OF BG MUST BE AFTER 60 DAYS FROM THE DATE OF COMPLETION OF WARRANTY PERIOD)

PERFORMANCE BANK GUARANTEE

In accordance of M/s. Bharat Heavy Electricals Limited (A Government of India undertaking, a company incorporated under the Companies Act 1956 having its Registered Office at "BHEL House", SIRI Fort, New Delhi 110 049) through its Industrial Valves Plant located at Goindwal Sahib, Distt. Tarn Taran- 142423 [Punjab] (hereinafter called 'the Company') having entered into a contract with …….hereinafter called ' the said contractor ' which term includes 'suppliers' for the purpose of this Bond and under the terms and conditions of the contract No……. Dt ……. Between BHEL, Goindwal and as per the contract, the contractor / supplier is to furnish a performance Bank guarantee for Rs. ……. for the due performance of the equipment to be supplied under the above referred contract and for the fulfillment of all the terms and conditions of the contract, We …….(indicate the name of the bank) (herein after referred to as the bank) at the request of ……. (Contractor(s)) do here by undertake to pay the company an amount not exceeding Rs…….against any loss or damage caused to or suffered or would be caused to or suffered by the company by reason of any breach by the said contractor (s) of any of the terms and conditions contained in the said agreement.

2. We …….(indicate the name of the bank with full address), do hereby undertake to pay the amounts due and payable under this guarantee without any demur, merely on a demand from the Company stating that the amount claimed is due by way of loss or damage caused to or would be caused to or suffered by the Company by reason of breach by the said Contractor(s) of any of the terms and conditions contained in the said Agreement or by the reason of the contractor(s) 'failure to perform' the said agreement. Any such demand made on the Bank shall be conclusive as regards the amount due and payable by the Bank under this guarantee. However, our liability under this guarantee shall be restricted to an amount not exceeding Rs._____.

3. We undertake to pay unconditionally to the Company any money so demanded notwithstanding any dispute(s) raised by the Contractor in any suit, or proceedings pending before any Court or Tribunal or Arbitration or before any other authority relating thereto our liability under this present being absolute and unequivocal. The payment under this guarantee would not wait till the disputes have been decided by any Court or Tribunal or in the arbitration proceedings or by any other authority. The payment so made by us under this Bond shall be a valid discharge of liability for payment thereunder and the Contractor(s) shall have no claim against us for making such payment.

4. We…….(indicate the name of Bank), further agree that the guarantee herein contained shall remain in full force and effect during the period that would be taken for the performance of the said Agreement and that it shall continue to be enforceable till all the dues of the Company under or by virtue of the said Agreement have been fully paid and its claims satisfied or discharged or till_____Office / Department/ Division of the Company certifies that the terms and conditions of the said Agreement have been fully and properly carried out by the said Contractor(s) and accordingly discharges this guarantee.

5. (I) Unless a demand or claim under this guarantee is made on us in writing on or before the _____we shall be discharged from all the liability under this guarantee thereafter. But where such claim or demand has been preferred by the Company with the Bank before the expiry of the said date, the claim shall be enforceable notwithstanding the fact that the said enforcement is effected after the said date.

(ii) For the purpose of this clause, any letter making demand on the Bank by M/s. BHEL dispatched by Registered Post with Ack.Due or by Telegram or by any Electronic media addressed to the above mentioned address of the Bank shall be deemed to be the claim / demand in writing referred to above irrespective of the fact as to whether and when the said

letter reaches the Bank, as also any letter containing the said demand or claim is lodged with the bank personally.

6. **We ……..(indicate the name of Bank), further agree with the company that the Company shall have the fullest liberty without our consent and without affecting in any manner our obligations hereunder to vary any of the terms and conditions of the said agreement or to extend time of performance by the said Contractor (s) from time to time or to postpone for any time or from time to time any of the powers exercisable by the Company against the said Contractor(s) and to forbear or enforce any of the terms and conditions relating to the said Agreement and we shall not be relieved from our liability by any reason of any such variation or extension being granted to the said Contractor(s) or for any forbearence, act or omission on the part of the company or any indulgence by the company to the said Contractor(s) or by any such matter or thing whatsoever which under the law relating would, but for this provision, have effect of not so relieving us.**

7. **This guarantee will not be discharged due to the change in the constitution of the Bank or the Contractor(s).**

8. **It shall not be necessary for the company to proceed against the contractor before proceeding against the guarantor-bank and the guarantee herein contained shall be enforceable against them notwithstanding any security, which the company may have obtained or obtain from the Contractor shall, at the time when proceedings are taken against the guarantor hereunder be outstanding or unrealized.**

9. **Any claim or dispute arising under the terms of this document shall only be enforced or settled in the Courts at Tarn Taran, Punjab, India.**

10. **The guarantor hereby declare that it has power to execute this guarantee and the executant has full powers to do so on its behalf under the proper authorities granted to him/them by the guarantor.**

11. **We ……(indicate the name of Bank) lastly undertake not to revoke this guarantee during its currency except with the previous consent of the company in writing.**

In witness whereof we……., (indicate the name of Bank) have hereunto setout Bank Seal the_____day _____month 200
BANK E-MAIL ID:
BANK PHONE NO.
BANK FAX NO:

LIST OF CONSORTIUM BANKS

Annexure: J

List of consortium bank for getting PBG released

Sl. No.	BANKS
1	STATE BANK OF INDIA
2	PUNJAB NATIONAL BANK
3	HDFC BANK
4	SYNDICATE BANK
5	CANARA BANK
6	INDIAN BANK
7	ST. BANK OF HYDERABAD
8	ICICI BANK
9	STANDARD CHARTERED BANK
10	UCO BANK
11	KOTAK MAHINDRA
12	ORIENTAL BANK OF COMMERCE
13	STATE BANK OF TRAVANCORE
14	CENTRAL BANK
15	IDBI BANK
16	FEDERAL BANK
17	HSBC LTD
18	DEUTSCHE BANK
19	CORPORATION BANK
20	CITI BANK
21	BANK OF BARODA
22	ABN AMRO BANK
23	UNITED BANK OF INDIA
24	VIJAYA BANK
25	UNION BANK OF INDIA
26	PUNJAB & SIND BANK
27	ANDHRA BANK
28	BANK OF INDIA
29	AXIS BANK

Annexure D

BHE:IVP:RT:PR Rev 03

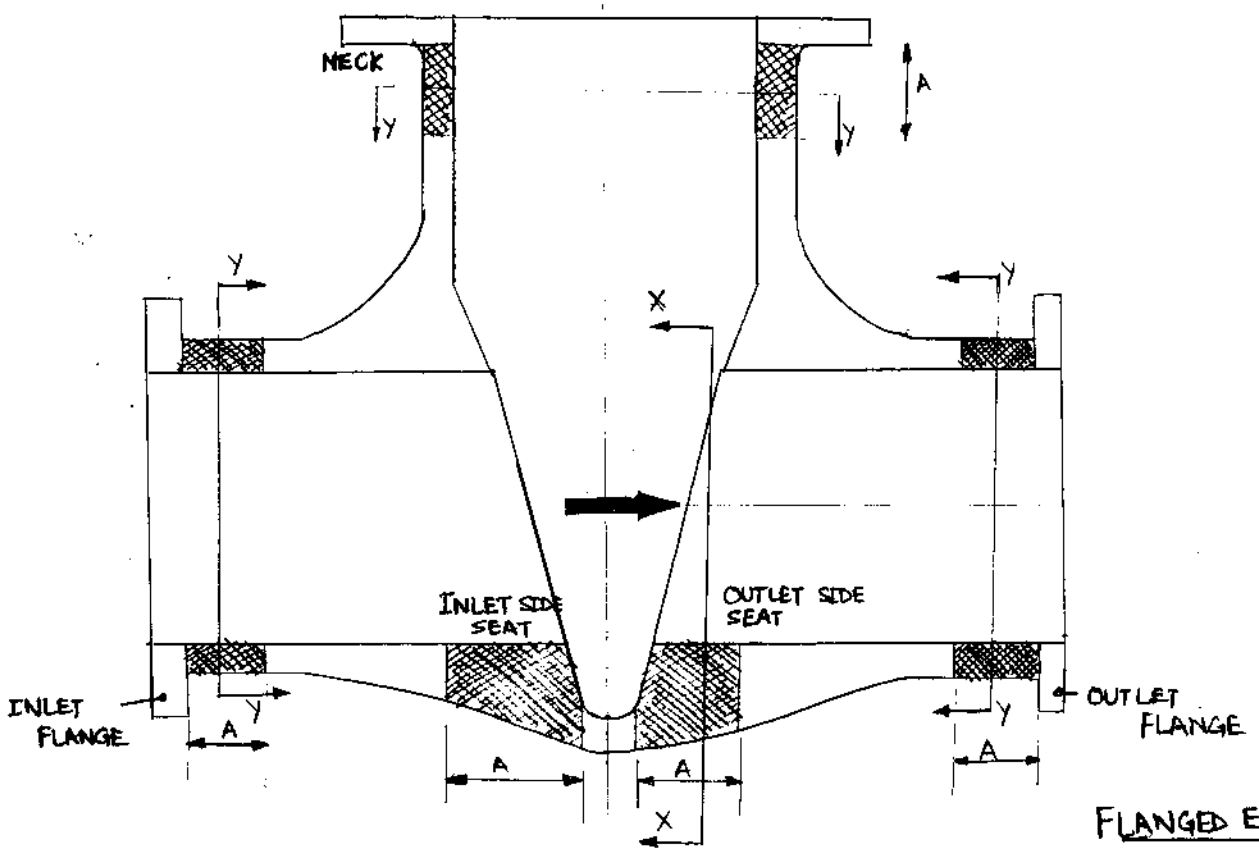

FLANGED END BODY

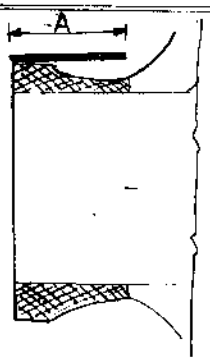

BW END BODY

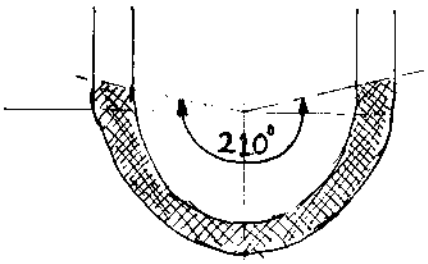

SECTION X-X
210° coverage

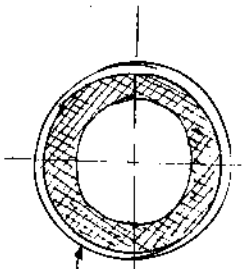

To cover round the shell
SECTION YY

A = Max [3 tm , 70 mm]
tm → wall thickness 'min'

SHOOTING LOCATION DESIGNATION

AT NECK	: N1, N2, N3, N4,...
AT INLET FLANGE PIPE	: A1, A2, A3, A4,....
AT INLET SIDE SEAT	: SA1, SA2, SA3, SA4,....
AT OUTLET SIDE SEAT	: SB1, SB2, SB3, SB4,...
AT OUTLET FLANGE PIPE	: B1, B2, B3, B4.....
*AT INLET FLANGE FACE	: FA1, FA2, FA3, FA4,....
*AT OUTLET FLANGE FACE	: FB1, FB2, FB3, FB4,....

* FOR FLANGED END BODIES ONLY

BHE: IVP: RT: PR: Rev 3

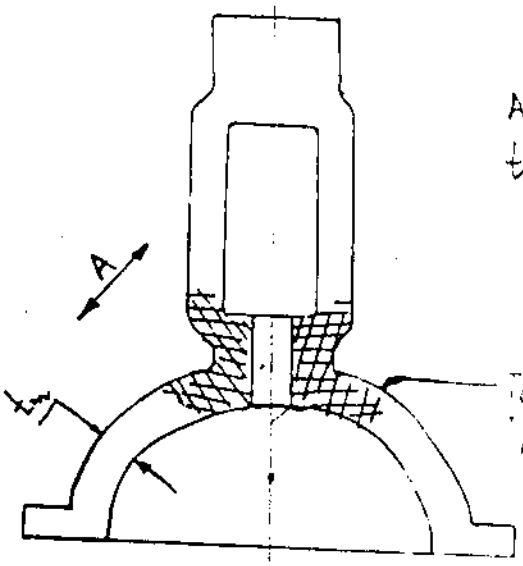

A = Max [3 t_m , 70 mm]

t_m → wall thkness, min

SHOT DESIGNATION AS 1, 2, 3, 4, . . .

SHOOTING SKETCH OF GATE VALVE YOKE / BONNET

Bharat Heavy Electricals Limited
433, Ind. Valves Plant, GOINDWAL SAHIB (Distt. Amritsar)-143 423.

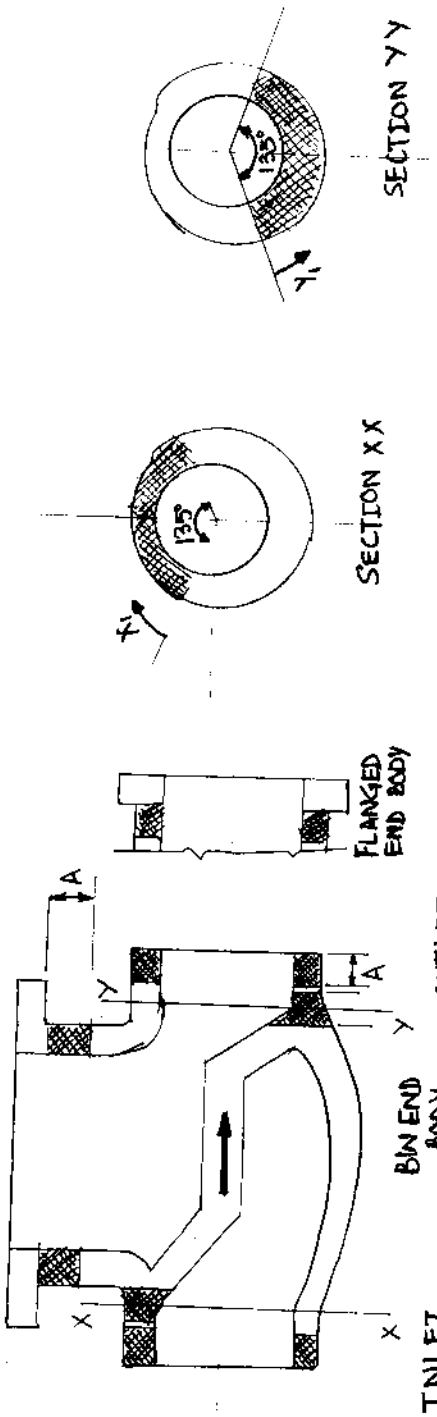

A = Max {3.t_m, 70mm}

t_m → min. wall thickness, mm

SHOOTING LOCATION	DESIGNATION
AT NECK	N1, N2, N3, ...
AT INLET END	A1, A2, A3, ...
AT OUTLET END	B1, B2, B3, ...
AT SECTION XX	X_1, X_2, ...
AT SECTION YY	Y_1, Y_2, ...

SHOWING SKETCH OF CORNER

A = max [2 t_m, 70 mm]

t_m = min thickness, mm

To cover full area round the bonnet

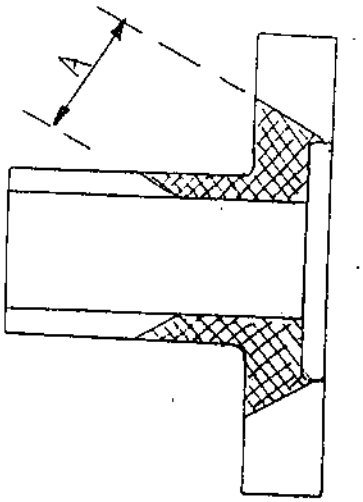

BHE: IVP: RT: PR Rev 03

SHOOTING SKETCH OF FLAP VALVE BODY

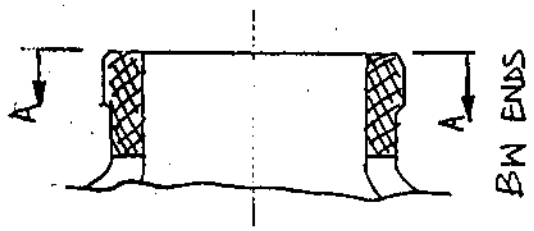

SHOOTING LOCATION	DESIGNATION
AT NECK	N1, N2, N3, ...
AT INLET PIPE	A1, A2, A3, ...
AT INLET BW END	FA1, FA2, ...
AT OUTLET PIPE	B1, B2, B3, ...
AT OUTLET BW END	FB1, FB2, FB3, ...
AT SEAT	S1, S2, S3, ...

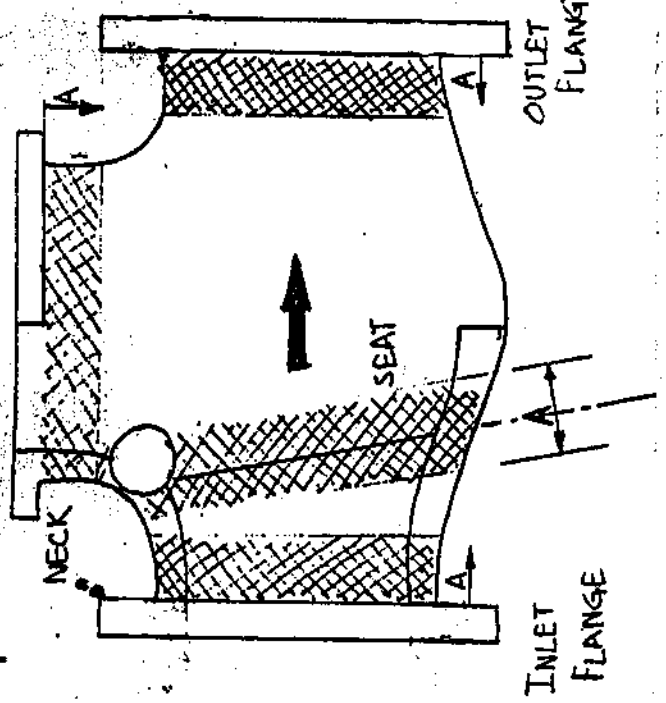

DIRECTION AND SHOT LOCATION

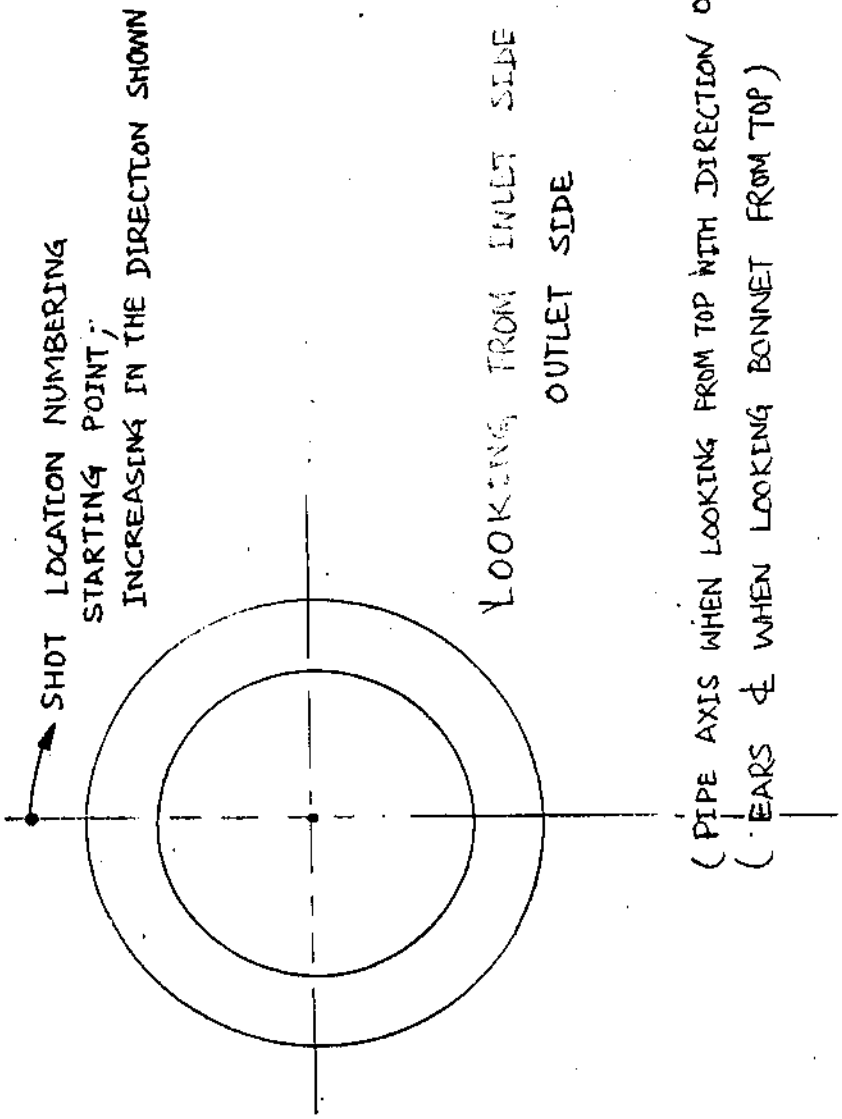

QUALITY ASSURANCE

SIP:VS:17 / Rev.03

PROCEDURE FOR REPAIR OF STEEL CASTINGS - VALVES

REV.	DATE	PREPARED	REVIEWED	APPROVED
00	01.08.1996	R.Kaliaperumal	R.Arthanareeswaran	C.R.Raju
01	22.06.2006	S.Selvarajan	R.Arthanareeswaran	C.R.Raju
02	15.07.2011	D.Sudhakaran	S.Selvarajan	V.Ravikumar
03	06.06.2013	N.Nagamuthu Pandian	S.Selvarajan	V.Ravikumar

RECORD OF REVISIONS

Rev No	Date	Clause No.	Details of revision
00	01.08.1996	--	This replaces PR:QE:195/00
01	22.06.2006	1.1	Specification A217 C12A added.
		2.2.1	Revised.
		4.2	C12A requirement added
		5.14	ROH & ROC requirements added
		Table-1	Modified and details of Specification A217 C12A added
		Table-2	Added
02	15.07.2011	5.4	Revised
		5.14	Changed to Cl.5.16 and sub clause 5.16.1 to 5.16.4 added. Details on C12A added.
		5.14.2	Changed to Cl.5.15
		Table-1	Note-1 change to Cl.5.16.2
03	06.06.2013	5.16.1	Revised. Ni+Mn content restricted for C12A welding consumable.

1.0 SCOPE

1.1 This procedure details out the requirements for repair of Steel castings used in Valves covering the following specifications.

Carbon steel:	ASTM A 216 WCB & WCC
Alloy steel:	ASTM A217 C5, C12A, WC6, WC9 & CSN 422744.6
Martensetic Stainless steel:	ASTM A 217 CA15,
Austenitic Stainless steel:	A 351 CF3M, CF8, CF8M & CF8C

2.0 DEFECTS THAT DO NOT REQUIRE WELD REPAIR

2.1 Machinable surfaces

2.1.1 Foundry defects other than cracks, shrinkages and cold shuts can be left without weld repair on machinable areas provided that the depth of such defects is less than 75% of the machining allowance provided.

2.1.2 After machining, if any sand inclusions or blow holes are found, which are less than 3 mm in size and separated from the adjacent defect by at least 25 mm, they can be left without repair. This should be judiciously decided when defects are noticed on sealing surfaces.

2.2 Non-machinable surfaces

2.2.1 Foundry defects other than cracks, shrinkages and cold shuts can be dressed smoothly by grinding provided that the depth of such defects is less than 5% of the specified wall thickness with size less than 10 mm, separated from one another by at least 100 mm and maintaining minimum wall thickness at those locations.

3.0 DEFECTS THAT REQUIRE WELD REPAIR

3.1 All the defects, which are not acceptable as per the respective standards of Visual inspection and NDE excluding those listed in clause 2.0, and defects detected during machining or hydraulic test can be salvaged by sound welding practices, provided that the defects are not extensive and are accessible for repair.

4.0 SURFACE PREPARATION

4.1 The defective areas shall be identified and marked for repair.

4.2 Defects shall be removed by grinding, machining or air arc gouging to obtain a sound base for welding. If air arc gouging is employed, it shall be done with preheating as given in Table 1. The gouged area shall be ground to remove all black spots. Gouging is not permitted for C12A materials. The ground/machined area shall be tested by LPI/MPI to ensure defect removal.

4.3 The defective area must be adequately prepared to permit correct manipulation of the electrode.

4.4 The area to be welded shall be free from sand, oil, paint, grease etc.

5.0 WELDING PROCEDURE

5.1 The repair welding shall be done only by IBR approved works.

5.2 The procedure used for welding shall be qualified in accordance with ASTM A 488/ASME Section IX.

5.3 The welders employed for repair work shall be qualified in accordance with IBR.

5.4 The welding consumables and parameters shall be as per the qualified procedures. The recommended welding consumables are given in Table 1. Only BHEL approved brands of Electrodes are to be used. The use of other welding filler material is only allowed after prior agreement with the BHEL.

5.5 Before welding, the electrodes shall be baked at 150-200 deg. C for 1 hour for stainless steel and 250-300 deg. C for 1 hour for others and stored at 150 deg. C till use.

5.6 Preheating for welding shall be as given in Table 1.

5.7 The welding current should be kept as low as possible consistent with smooth operation and a good wash at the sides.

5.8 Wherever possible, the casting should be positioned for down hand welding operation. When extra long welds or several repair positions are involved, it is preferable to stagger the welding operation to distribute the heat and to minimise the distortion.

5.9 Welding shall be done using stringer bead technique, with beads not more than 50-75 mm in length.

5.10 After completing each layer, the weld surface shall be thoroughly cleaned to ensure complete slag removal before depositing the next layer.

5.11 When restriking, the arc should be started ahead of the previous weld run, moved back over the tapered portion and then continued forward.

5.12 After completion of welding and during interruptions, the job shall be post heated at temperatures as given in Table 1.

5.13 The weld profile shall merge smoothly with the contour of the casting and shall be free from slag, spatter and notches. The weld reinforcement shall be dressed up.

5.14 All major repaired castings shall be post weld heat treated.
For CS & AS, A major repair is defined as the repair on castings that have leaked during hydraulic test or where the depth of repair exceeds 20% of the wall thickness of the casting or 25 mm whichever is less or the extent of repair exceeds 65 Sq.cm.

5.15 After welding, post weld heat treatment shall be done at temperatures indicated in Table-1, with a minimum soaking time as specified in WPS (or 1 hour per inch of the weld thickness if no where specified) and cooled in furnace up to 400 deg. C. Rate of heating and cooling shall be as per Table-2

5.16 Weld repair in P15E Group-1 (C12A) material to be done only after approval by BHEL. All repaired C12A castings to be Post weld heat treated irrespective of depth or size of repair.

5.16.1 The welding filler materials shall be in accordance to the WPS. The available welding filler materials are :

Cromocord 9 M (Oerlikon)
Fox C 9 MV (Bohler)
Cromo 9V (Thyssen)

In addition, the sum of the Ni+Mn content, in all welding consumables used to weld repair C12A castings,shall not exceed 1.0%.

5.16.2 Preheat shall be maintained for till welding is completed. Interpass temperature shall be limited to 350 deg.C. After post heating, welds shall be slowly cooled to room temperature and then PWHT shall be taken up within 72 hours. Heating and cooling rates for PWHT shall be as Table-2,but shall not exceed 140 deg.C/ hour and controlled cooling shall be done up to 350 deg. C.

5.16.3 Total holding time of all heat treatment performed (tempering and stress relieving) after normalizing shall not exceed 40 hrs at ≥ 730°C. If many heating cycles are necessary, the temperature before last heating can be reduced to 730°C.

5.16.4 On each casting, weld hardness shall be checked random wise and documented accodingly. Values of max 350 HV10 are allowed.

6.0 NON DESTRUCTIVE EXAMINATION

6.1 For minor defect, after completion of welding, the repair weld shall be tested by LPI/MPI.

6.2 For major defect, the repaired area shall be re-examined by the NDE method which originally disclosed the defect. MT/PT shall be performed after PWHT if performed as above. Weld repairs made as a result of RT shall be RT tested after welding. The acceptance standards for porosity and slag inclusion shall be as per UW-51 of ASME Section VIII Division 1.

7.0 SURFACE TREATMENT AFTER WELDING

7.1 Austenitic stainless steel castings (A 351 CF3M, CF8, CF8C & CF8M) shall be acid pickled and passivated after welding as per the following procedure.

7.1.1 Pickling

7.1.1.1 Pickling shall be done by immersing the castings in the pickling solution, which consists of Nitric acid 15-20% by volume, Hydrofluoric acid 2-5% by volume and the rest water, for 2 hours. The pickling tank shall be of stainless steel material. After pickling, the entire surface shall be bright. If any black patches are present, they shall be scrubbed using stainless steel wire brushes and the effectiveness of pickling shall be checked.

7.1.1.2 After pickling, the castings shall be rinsed in running service water having chloride content not exceeding 25 PPM. The rinsing shall be continued until there is no sign of free acid left when tested with Methyl orange indicator.

7.1.2 Passivation

7.1.2.1 Passivation shall be done by immersing the castings in the passivation bath, which consists of Nitric acid 15-20% by volume and the rest demineralised water, for 3 hours. The passivation tank shall be of stainless material.

7.1.2.2 After passivation, the castings shall be rinsed in running service water having chloride content not exceeding 25 PPM. The rinsing shall be continued until there is no sign of free acid left when tested with Methyl orange indicator.

7.1.2.3 The satisfactory passivity of the surface shall be checked using stainless steel passivity test kit.

7.1.2.4 After satisfactory completion of this test, the castings shall be again rinsed in demineralised water having chloride content not exceeding 0.5 PPM and specific conductivity not exceeding 10 micro mhos. The rinsings shall be checked for chloride with 1% Silver nitride, which shall not exceed 0.5 PPM.

8.0 DOCUMENTATION

8.1 The details of repair work carried out shall be documented and correlated to welder and NDE reports.

Table - 1

Welding procedure for repair of steel castings

Casting Material	Electrode Specification	Minimum Preheat in ° C	Minimum Post heat Temperature in ° C	PWHT Temperature in ° C
A 216 WCB, A 216 WCC	E 7018 - A1	150	150 for 2 hours	595 to 625
A 217 WC6	E 8018 B2	220	220 for 2 hours	650 to 680
A 217 WC9, A 217 C5, CSN 422744	E 9018 B3	220	220 for 2 hours	675 to 705
A 217 C12A	E 9015 B9 E 9018 B9	220-280	220-280 for 2 hrs	750 to 770
A 217 CA15	E 410	220	220 for 2 hours	760 to 790
A 351 CF3M, A 351 CF8M	E 316	Nil	Nil	Nil
A 351 CF8, A 351 CF8C	E 347	Nil	Nil	Nil

Table – 2

Rate of heating / cooling shall be as below unless otherwise specified. Cooling shall be in furnace up to 400 deg. C and further in Air.

Thickness of Material	Maximum Rate of Heating & Cooling above 400 deg. C (For A217 C12A it shall be 350 deg.C)
Up to 25mm	220°C/Hr (140°C/Hr max for A217 C12A)
Over 25 - 50mm	110°C/Hr
Over 50 - 75mm	75°C/Hr
Over 75mm	55°C/Hr

****