ಭಾರತ್ ಹೆವಿ ಎಲೆಕ್ಟ್ರಿಕಲ್ಸ್ ಲಿಮಿಟೆಡ್
भारत हेवी इलेक्ट्रिकल्स लिमिटेड
Bharat Heavy Electricals Ltd.,
(A Government of India undertaking)
Electronics Division
PB 2606 , Mysore Road Bangalore , 560026 INDIA

Tender Document for " Supply of Control Desk & Furniture to NTPC TALCHER STPP 2x660MW"

TENDER REFERENCE	**NJP0000091**
TENDER DOCUMENT AVAILABLE FROM	As per https://eprocurebhel.co.in website
LAST DATE AND TIME FOR SUBMISSION OF TENDER	
DATE AND TIME FOR TENDER OPENING	
SUBMISSION OF TENDER	The bidder should submit their offer in eProcurement portal only : https://eprocurebhel.co.in

Note: Bidder to refer E-procurement portal(https://eprocurebhel.co.in) for any corrigendum, due date extension, etc. index:

This tender Document contains documents as per below Index:

INDEX

SL No.	DESCRIPTION
1	SPECIAL COMMERCIAL CONDITIONS OF CONTRACT(SCC)
2	INSTRUCTIONS TO BIDDERS
3	GENERAL COMMERCIAL CONDITIONS FOR CONTRACT
4	TECHNICAL SPECIFICATION WITH PRE-QUALIFICATION REQUIREMENTS

Contact Person at BHEL: Nandjee Pandit, BHEL/Engineer(CE-MM-PR) Ph: 080-26998053,9591976250

ಭಾರತ್ ಹೆವಿ ಎಲೆಕ್ಟ್ರಿಕಲ್ಸ್ ಲಿಮಿಟೆಡ್
भारत हेवी इलेक्ट्रिकल्स लिमिटेड
Bharat Heavy Electricals Ltd.,
(A Government of India undertaking)
Electronics Division
PB 2606 , Mysore Road Bangalore , 560026 INDIA

CE: PR: 003- Rev 03

SPECIAL COMMERCIAL CONDITIONS OF CONTRACT

Reference is brought to BHEL's Instructions to Bidders (Document Ref: CE: PR: 001- Rev 05) and General Commercial Conditions for Contract (Document Ref: CE: PR: 002- Rev 04).

These two documents along with Special Conditions of Contract annexed to this RFQ will form an integral part of the contract as and when the RFQ culminates into a Purchase Order / Contract.

RFQ No. : **NJP0000091**
RFQ Date : As per E-procurement website
RFQ Due Date : As per E-procurement website
Customer/Project : **NTPC TALCHER STPP 2X660MW**
Scope Description : **CONTROL DESK AND FURNITURE**

Kindly submit your quotation as **two part bid** (Pre-Qualification Criteria & Techno-Commercial bid-1st part & Price bid-2nd Part) in E-Procurement System portal: https://eprocurebhel.co.in within the Due- Date of __ As per E-procurement website _____ before _ As per E-procurement website _____ hours IST and note that tenders will be opened on the same day at _ As per E-procurement website _____hours IST.

Purchase Executives: Clarifications with regard to the tender shall be addressed to purchase officers whose e-mail IDs are given below:
__nandjee@bhel.in____ or _rk.pandey@bhel.in__

Splitting of tendered quantity to MSE vendors for Purchase preference: Non-Splitable

Destination: For Indigenous scope of supply, items are to be directly despatched to BHEL site office/stores located at_**Talcher** in **Odisha** state respectively, India. Detailed Consignee details will be issued by BHEL along with Despatch Clearance.

Terms of Delivery:

- **Indigenous scope of supply:** Ex-works, ___<indicate station of dispatch>_____ (including Packing & Forwarding charges but excluding Taxes).

Under-mentioned details shall be provided against indigenous supplies & services:

a. GSTIN of place of supply : _____

b. HSN (Harmonized System of Nomenclature) code : _____
Applicable tax and Rate : _____&_____

c. GSTIN of place of supply of service : _____

d. SAC (Service Accounting Code) : _____
Applicable tax and Rate : _____&_____

e. GeM Seller ID mandatorily required for PO placement: _____

f. MSE vendor : Yes-MSE supporting documents enclosed/No
(If MSE, supporting documents such as Udyam certificate to be enclosed)

I. Bidders to mandatorily provide confirmation/compliance for the under-mentioned terms:

SL NO.	TERMS	BHEL ACCEPTABLE TERM	BIDDER'S CONFIRMATION	REMARKS, if any
01	**Reverse Auction (RA)**	BHEL shall be resorting to Reverse Auction (Guidelines as available on https://www.bhel.com/guidelines-reverse-auction-2024) for this tender. RA shall be conducted among all the techno-commercially qualified bidders. Price bids of all techno-commercially qualified bidders shall be opened and same shall be considered as initial bids of bidders in RA. In case any bidder(s) do(es) not participate in online Reverse Auction, their sealed envelope price bid along with applicable loading, if any, shall be considered for ranking.	AGREE	
02	**Delivery Period**	Within **211** days from the date of placement of Purchase Order. Manufacturing clearance will be provided as per the latest site delivery schedule. Delay in contractual delivery will attract Penalty /Liquidated Damages(LD) as per GCC Clause no.:04.b.	AGREE	
03	**Terms of Payment at the time of material supply**	Refer Clause "F" of Instructions to Bidder for BHEL-EDN standard Payment terms and loading factors applicable for non-compliance against payment terms: *"100% payment of the basic price of Goods with 100% GST on the goods price will be paid in 45 days of delivery of consignment or 15 days from the date of submission of complete set of documentation, whichever is later. "* Note: MSME vendors may opt to get payment through Trade Receivables electronic Discounting System (TReDS)	AGREE	
04	**Declaration of local content**	'Local content' means the amount of value added in India which shall, unless otherwise prescribed by the Nodal Ministry, be the total value of the item procured (excluding net domestic indirect taxes) minus the value of imported content in the item (including all customs duties) as a proportion of the total value, in percent. (Refer Clause 'A' Sl. No. 12 of Instructions to Bidders). The 'Class-I local supplier' shall be required to indicate percentage of local content and provide certification that the item offered meets the local content requirement for 'Class-I local supplier'. (Note: Non Local suppliers are not eligible to participate in the tender)	Percentage of local content: _____% Details of the Location(s) at which the local value addition is made: _____	

II. **Bidder to note that Deviations shall not be permitted for the below mentioned terms and are deemed to be complied. In case of non-compliance/deviation, offer shall be liable for rejection:**

(1) **a) Submission of Engineering documents post PO as indicated in Cl: 04 of GCC:** After award of contract, Successful bidder shall submit complete set of documents (like drawings, bill of materials, datasheets, catalogues, quality plan, etc. as called in tender specification) for approval, within **21** days from the date of award of contract.
Buyer shall issue manufacturing clearance along with approved documents within **60** days after receipt of

documents from seller. Any delay by buyer/consignee in providing approved documents beyond specified period shall be on the part of buyer and BHEL will extend the delivery period for such period of delay.
In case of any corrections in documents to be incorporated by seller for approval of document based on end-user/consultant/buyer comments, revised documents have to be submitted by seller incorporating the comments within **07** days from the date of receipt of the same.

Seller shall be required to commence manufacturing only after receipt of approved documents from BHEL.

b) **Extension of Delivery Period:** Refer ***Cl.04 b) Extension of Delivery Period*** **of GCC**.

(2) **Validity:** The offer will be valid for a period of _**90**_ days from the date of Part-I bid opening and in case of Negotiation/ Counter-offer/Reverse Auction, price validity will apply afresh for a period of _**60**_ days from the date of according final price by bidder (or) up to original validity period, whichever is later.

(3) **Warranty:** _**24**_ months from the date of delivery of goods or **18** months from date of commissioning whichever is earlier.

(4) **a) Pre-dispatch inspection at Seller premises as indicated in Cl: 06 a) of GCC**: While bidding, the sellers should take into account **14** days for arranging inspection from the date of email offering the goods for inspection. Any delay in arranging inspection beyond the specified period due to reasons not attributable to seller, shall be on the part of buyer and BHEL will extend the delivery period for such period of delay.

b) **Material despatch clearance certificate (MDCC):** Seller should take into account **14** days for issuance of despatch clearance by BHEL from the date of successful inspection report. Any delay in issue of MDCC beyond the specified period shall be on the part of buyer and BHEL will extend the delivery period for such period of delay.

(5) **Despatch Documents:** Complete set of despatch documents (original + 1 photocopy set) as per Purchase Order shall be forwarded to Purchase Executive/BHEL directly. Depending upon the project/customer demands, Despatch documents may include one (or) more documents from the following:
Invoice (01 originals and 01 copy with original sign & seal / digitally signed invoice), Lorry Receipt (L/R), Packing List, NIL Short-Shipment Certificate, Warranty certificate, insurance intimation letter, E-way bill (Part-A & B), original POD (Proof of Delivery) on L/R.

The precise list of despatch documents needed for the project will be specified in the Purchase Order.
One set of Invoice, Packing List, Lorry Receipt (or) AWB/BOL shall be e-mailed immediately to BHEL-EDN at the time of despatch.

Note: Detailed Packing List should indicate package-wise content details and also Net & Gross weight of each package.

(6) **Freight Charges:** Freight charges for complete scope of supply shall be to vendor's account. Supply may take place in a single/multiple lots depending on site progress and accordingly vendor has to despatch the material upon receipt of clearance from BHEL. Accordingly, Bidder to quote reasonable Freight charges (Lump sum) along with applicable tax, in price bid separately for each project.

(7) Evaluation criteria to determine L1 bidder: Items will not be split on item-wise lowest offer. **Evaluation of the lowest bidder will be done as package wise separately for Package-1 (Control desk and Workstation Furniture) and Package-2 (Computer Furniture-Computer table, Printer table, Keypad, Almirah, Locker & Chair).**
The Procuring Entity reserves its right to grant preferences to eligible Bidders under various Government Policies/ directives (policies relating to Make in India, MSME etc.)

a. Preference to Micro & Small Enterprises (MSEs): Purchase preference will be given to MSEs as defined in *Public Procurement Policy* for Micro and Small Enterprises (MSEs) Order, 2012 dated 23.03.2012 issued by Ministry of MSME (and its subsequent Orders/Notifications issued by concerned Ministry) &

the latest *Office Memorandum* issued by Department of Expenditure dt:18.05.2023.

If the bidder wants to avail the Purchase preference, the bidder must be the manufacturer of the offered product in case of bid for supply of goods. Traders are excluded from the purview of Public Procurement Policy for Micro and Small Enterprises. Relevant documentary evidence in this regard shall be uploaded along with the bid in respect of the offered product.

Bidder shall furnish the following declaration.

MSE declaration	Any Bidder falling under the MSE category shall furnish UDYAM Registration certificate in support of the same along with their techno-commercial offer. Note: If the bidder does not furnish the above in the tender, the offer shall be processed construing that the bidder does not fall under the MSE category.
MSE Category declaration	If the bidder belongs to any of the below MSE category, the bidder to mention Social Category and Gender in the REMARKS column and furnish UDYAM Registration certificate containing these details in support of the same along with their techno-commercial offer a. SC/ST Owned b. Women Owned Note: If the bidder does not furnish the above in the tender, the offer shall be processed construing that the bidder does not fall under the above category.

b. Preference to Make in India (MII) products: Preference shall be given to Class 1 local supplier as defined in public procurement (Preference to Make in India) order 2017 as amended from time to time (and its subsequent Orders/Notifications issued by concerned Nodal Ministry for specific Goods/Products) & the latest *Office Memorandum* issued by Department of Expenditure dt:18.05.2023 and Revision dt.19-07-2024.

{'Class-I local supplier' means a supplier or service provider, whose goods, services or works offered for procurement, has local content equal to or more than 50%, as defined under Public procurement order no. P-45021/2/2017-PP (BE-II) dt.: 16.09.2020 and Revision dt.19-07-2024.

'Class-II local supplier' means a supplier or service provider, whose goods, services or works offered for procurement, has local content more than 20% but less than 50%, as defined under Public procurement order no. P-45021/2/2017-PP (BE-II) dt.: 16.09.2020 and Revision dt.19-07-2024}.

In the event of any Nodal Ministry prescribing higher or lower margin of purchase preference and/or higher or lower percentage of local content in respect of this procurement, same shall be applicable.'}

If the bidder wants to avail the Purchase preference, the bidder must upload a certificate from the OEM regarding the percentage of the local content and the details of locations at which the local value addition is made along with their bid, failing which no purchase preference shall be granted.
Default margin of purchase preference shall be 20% for Class-I local supplier only.

Note: For this procurement, the local content to categorize a supplier as a Class I local supplier/ Class II local Supplier/ Non local supplier and purchase preference to Class I local supplier, is as defined in Public Procurement (Preference to Make in India), Order 2017 dated 19.07.2024 issued by DPIIT. In case of subsequent orders issued by the nodal ministry, changing the definition of local content for the items of the NIT, the same shall be applicable even if issued after issue of this NIT, but before opening of Part-II bids against this NIT.

Operation methodology of Purchase preference clause to MSE & MII bidders is as detailed under clause:4. c. b) in the Office Memorandum issued by Department of Expenditure dt:18.05.2023 (ref. Annexure-VIII of ITB).

Note: In case of negotiations, the margin of purchase preference (20% for Class-I Non-MSE or 15% for MSE) shall be based on pre-negotiated L1 price and the eligible Class-I & MSE local bidder will have to match the negotiated L1 price.

(8) **Performance security**: Performance of the contract, Performance Bank Guarantee (PBG) or Security Deposit (SD), hereafter referred as performance security has to be submitted by successful bidder for **05%** of the contract value.
CPBG has to be furnished within **05** Weeks after notification of the award and it should remain valid for a period of **60** days beyond the date of completion of all contractual obligations, including warranty obligations.

Refer Clause "H" of Instructions to Bidders. Also note that CPBG should be in the format specified in Annexure VII of ITB and no deviation to this format will be allowed.

Modes of deposit:

a) Performance security may be furnished in the following forms:

(i) Local cheques of Scheduled Banks (subject to realization)/ Pay Order/Demand Draft/ Electronic Fund Transfer in favour of BHEL.

(ii) Bank Guarantee from Scheduled Banks/Public Financial Institutions as defined in the Companies Act.

(iii) PBG should be in the format specified in Annexure VII of ITB and no deviation to this format will be allowed.

(iv) Fixed Deposit Receipt issued by Scheduled Banks/Public Financial Institutions as defined in the Companies Act (FDR should be in the name of the Contractor, a/c BHEL).

(iv) Securities available from Indian Post offices such as National Savings Certificates, Kisan Vikas Patras etc. (held in the name of Contractor furnishing the security and duly endorsed/hypothecated/ pledged, as applicable, in favour of BHEL).

(v) Insurance Surety Bond.
(Note: BHEL will not be liable or responsible in any manner for the collection of interest or renewal of the documents or in any other matter connected therewith)

b) The Performance security will be forfeited and credited to BHEL's account in the event of a breach of contract by the supplier.

c) Performance security shall be refunded to the supplier without interest, after duly performing and completing the contract in all respects but not later than 60 days of completion of all such obligations including the warranty under the contract.

d) The Performance security shall not carry any interest.

e) CPBG/PBG should be mandatorily submitted along with SFMS (Structured Financial Messaging System).

(9) **Breach of Contract, Remedies & Termination**: In case of breach of contract (failure of supplier), wherever the value of Performance security available with BHEL against the said contract is at least 10% of the contract value, the same shall be encashed.
In case the value of the security instruments available is less than 10% of the contract value, the balance amount shall be recovered from other financial remedies (i.e. available bills of the contractor, retention amount, etc. with BHEL) or legal remedies be pursued.
Further, levy of liquidated damages, debarment, termination, de-scoping, short-closure, etc. shall be applied as per provisions of the contract

(10) **Installation & Commissioning** - Evaluation methodology**:**
E&C charges should not be less than **05%** of the Main-item supply value i.e., excluding Mandatory spares. In case the quoted total E&C value is less than **05%** of the Main-item supply value, BHEL shall evaluate Bidder's Price deducting differential amount from supply price proportionally from all items and apportioning towards E&C charges.

(11) **Payment terms for E&C charges:** 100% E&C charges along with tax as applicable, will be paid in 15 days from the date of submission of supplementary invoice/documents against proof of successful completion of installation & commissioning.

Note: Wherever bidders doesn't agree for such apportioning, the differential charges shall be retained from main supply invoice and retention amount will be paid after successful completion of Erection & Commissioning.

(12) Based on the under-mentioned declarations of Bidder as insisted under Rule 144(Xi) of General Financial Rules,2017 amendment dt. 24.02.2023, eligibility of offer will be ascertained in the tender:

"I have read the clause regarding restrictions on procurement from a bidder of a country which shares a land border with India; I certify that our firm is not from such a country or, if from such a country, has been registered with the Competent Authority. I hereby certify that our firm fulfils all requirements in this regard and is eligible to be considered."

Note: Wherever applicable, evidence of valid registration by the Competent Authority shall be attached.

Additional declaration by Bidder in the cases of specified Transfer of Technology (ToT):

"I have read the clause regarding restrictions on procurement from a bidder having Transfer of Technology (ToT) arrangement. I certify that our firm does not have any ToT arrangement requiring registration with the Competent Authority."

OR

"I have read the clause regarding restrictions on procurement from a bidder having Transfer of Technology (ToT) arrangement. I certify that our firm has valid registration to participate in this procurement."

(13) **Integrity Pact: Integrity Pact:** Execution of Integrity Pact is applicable for this tender (Refer clause "K" of Instructions to Bidders). The IP as enclosed with the tender is to be submitted (duly signed by authorized signatory who signs in the offer) along with techno-commercial bid. Only those Bidders who have entered into such an IP with BHEL would be competent to participate in the bidding. In other words, entering into this Pact would be a preliminary qualification.

(14) Declaration regarding 'Conflict of Interest among Bidders/Agents' should be submitted as part of the tender as per attached format.

(15) Grievance Redressal Mechanism:

To promote transparency and ensure fair treatment of all bidders, a structured Grievance Redressal Mechanism is in place to address any concerns or issues arising during the tendering process or in subsequent business dealings with the company.

Suppliers/Contractors are requested to follow the below escalation process for grievance resolution:

1. ***First Level:*** Any grievance should initially be addressed to the designated Dealing Officer, whose contact details are provided in the Notice Inviting Tender (NIT)/Contract.

2. ***Second Level:*** If the issue remains unresolved, it may be escalated by lodging a formal grievance through the SUVIDHA Portal: **https://suvidha.bhel.in/suvidha/.**

Responses will be provided in accordance with the defined escalation matrix."

(16) **For goods / works / services on Indian Suppliers / Contractors:**

Irrespective of the value of the invoice amount, the supplier/ contractor should necessarily upload the invoice details on BHEL SUVIDHA portal at https://suvidha.bhel.in/suvidha/, prior to despatch/raising invoice. All documents as per contract checklist, along with additional documents (if any), must be uploaded on the portal. It is mandatory that tax invoices with a net amount (including taxes) exceeding Rs five lakhs uploaded on the portal are digitally signed using a Class 3 Digital Signature Certificate (DSC) issued by a licensed Certifying Authority. Submission of invoice document in hard copy is allowed for invoices with a net amount (including taxes) equal to and upto Rs five lakhs in case the requirement for digitally signed invoice is not explicitly mentioned in the contract checklist.

The Invoice will not be accepted in absence of the above.

(17) **EMD/Bid security:** Not Applicable.

With this, we hereby confirm that all the terms & conditions as indicated in Instructions to Bidders (Document Ref: CE: PR: 001- Rev 05) & General Commercial Conditions for Contract (Document Ref: CE: PR: 002- Rev 04) are accepted without any deviation.

Vendor's Signature with Seal

On Bidder Letter Head

Date:

To,
M/s Bharat Heavy Electricals Ltd.
Electronics Division, Mysore Road,'
Bangalore – 560026

Sub: Declaration regarding 'Conflict of Interest among Bidders/Agents'

Ref: BHEL Tender / RFQ / NIT Number ……

Bidders having a conflict of interest shall not be eligible to participate in the tender process. In this regard, following declaration regarding 'conflict of interest' should be signed by the authorized signatory of the bidder and submitted as part of the tender.

Treatment of cases regarding conflict of interest:

The bidder notes that a conflict of interest would said to have occurred in the tender process and execution of the resultant contract, in case of any of the following situations:

i) If its personnel have a close personal, financial, or business relationship with any personnel of BHEL who are directly or indirectly related to the procurement or execution process of the contract, which can affect the decision of BHEL directly or indirectly;

ii) The bidder (or his allied firm) provided services for the need assessment/ procurement planning of the tender process in which it is participating;

iii) Procurement of goods directly from the manufacturers/suppliers shall be preferred. However, if the OEM/principal insists on engaging the services of an agent, such agent shall not be allowed to represent more than one manufacturer/supplier in the same tender. Moreover, either the agent could bid on behalf of the manufacturer/supplier or the manufacturer/supplier could bid directly but not both. In case bids are received from both manufacturer/supplier and the agent, bid received from the agent shall be ignored. However, this shall not debar more than one authorised distributor (with/ or without the OEM) from quoting equipment manufactured by an Original Equipment Manufacturer (OEM) in procurements under a Proprietary Article Certificate.

iv) A bidder participates in more than one bid in this tender process. Participation in any capacity by a Bidder (including the participation of a Bidder as a partner/ JV member or sub-contractor in another bid or vice-versa) in more than one bid shall result in the disqualification of all bids in which he is a party. However, this does not limit the participation of an entity as a sub-contractor in more than one bid if he is not bidding independently in his own name or as a member of a JV.

The Bidder declares that they have read and understood the above aspects, and the bidder confirms that such conflict of interest does not exist and undertakes that they will not enter into any illegal or undisclosed agreement or understanding, whether formal or informal with the other Bidder(s), in this regard. This applies in particular to prices, specifications, certifications, subsidiary contracts, submission or non-submission of bids or any other actions to restrict competitiveness or to introduce cartelization in the bidding process. **In case, the Bidder is found having indulged in above activities, the same will be considered as a violation of the tender conditions, and suitable action shall be taken by BHEL as per extant policies/guidelines.**

For M/s ……

Authorized Signatory

(with company seal & Name)

<u>On Bidder Letter Head</u>

Date:

To,

M/s Bharat Heavy Electricals Ltd.

Electronics Division, Mysore Road,'

Bangalore – 560026

Sub: Model Clause / Certificate as per clause 9 (a) of Revised Public Procurement (Preference to Make in India Order, 2017 of DPIIT dated 19.07.2024

Ref: BHEL Tender / RFQ / NIT Number ……

I (authorized signatory for M/s ……..) a 'Class-I Local Supplier' / 'Class-II Local Supplier' at the time of tender, bidding or solicitation hereby confirm that the item meets the Local Content requirement for 'Class-I Local Supplier' / 'Class-II Local Supplier' .

Tick appropriate option & cut the other one:

1)We are the reseller/distributor of the quoted product and the Local Content percentage is …… Break up of Local value addition to be furnished below (inclusive of Taxes):

a)

b)

c)

OEM certificate for country of origin to be submitted for above.

2) We are not the reseller/distributor of the quoted product and the Local Content percentage is ……

The address is as below, where the local content / value addition is made:

[Factory Address]

For M/s ……

Authorized Signatory

(with company seal & Name)

To,
M/s Bharat Heavy Electricals Ltd.,
Electronics Division P.B. No. 2606
Mysore Road, Bangalore –560 026
Ph. No.: 080 2699 8994

Ref –

Subject: Declaration as a Compliance of Restrictions under Rule 144 (xi) of GFR 2017 as per DOE Order (Public Procurement No.4) dated 23.02.2023 (as amended from time to time).

I have read the clause regarding restrictions on procurement from a bidder of a country which shares a land border with India; I certify that our firm is not from such a country or, if from such a country, has been registered with the Competent Authority. I hereby certify that our firm fulfils all requirements in this regard and is eligible to be considered.

ಭಾರತ್ ಹೆವಿ ಎಲೆಕ್ಟ್ರಿಕಲ್ಸ್ ಲಿಮಿಟೆಡ್
भारत हेवी इलेक्ट्रिकल्स लिमिटेड

Bharat Heavy Electricals Ltd.,
(A Government of India undertaking)
Electronics Division
PB 2606 , Mysore Road, Bengaluru , 560 026, INDIA

CE:PR:001- Rev 05

INSTRUCTIONS TO BIDDERS

Bidder is requested to read the instructions carefully and submit their quotation taking into consideration of all the points:

A. GENERAL INSTRUCTIONS:

1. Any Purchase Order resulting from this enquiry shall be governed by the Instructions to Bidders (document reference: CE: PR: 001 – Rev 05), General Conditions of Contract (document reference: CE: PR: 002 - Rev 04) and Special Conditions of Contract, if any, of the enquiry.
2. Any deviations from or additions to the "General Conditions of Contract" or "Special Conditions of Contract" require BHEL's express written consent. The general terms of business or sale of the bidder shall not apply to this tender.
3. Regret letter (either through post or by mail or by EPS) indicating reasons for not quoting must be submitted without fail, in case of non-participation in this tender.

   Supplier shall be liable for removal as a registered vendor of BHEL when the supplier fails to quote against four consecutive tender enquiries for the same item or all enquiries in last two years for the same item, whichever is earlier.
4. Procurement directly from the manufacturers is preferred. However, if the OEM/ Principal insist on engaging the services of an agent, such agent shall not be allowed to represent more than one manufacturer/ supplier in the same tender.

   Moreover, either the agent could bid on behalf of the manufacturer/ supplier or the manufacturer/ supplier could bid directly but not both. Agent/Representative authorized by the OEM/Principal in turn cannot further sub authorize any other firm for submitting the offer or for placement of order.

   In case bids are received from the manufacturer/ supplier and his agent, bid received from the agent shall be ignored.
5. Consultant / firm (and any of its affiliates) shall not be eligible to participate in the tender/s for the related goods for the same project if they were engaged for consultancy services for the same project.
6. If an Indian representative/associate/liaison office quotes on behalf of a foreign based bidder, such representative shall furnish the following documents:
   a. Authorization letter to quote and negotiate on behalf of such foreign-based bidder.
   b. Undertaking from such foreign based bidder that such contract will be honored and executed according to agreed scope of supply and commercial terms and conditions.
   c. Undertaking shall be furnished by the Indian representative stating that the co-ordination and smooth execution of the contract and settlement of shortages/damages/replacement/repair of imported scope

File No. EDN-CEMM0HOD(ADMN)/6/2024-EDN-CE-MM (Computer No. 41389)
Generated from eOffice by J P Masand, Addl_GM(JPM)-CE-MM-EDN, Addl_GM, BHARAT HEAVY ELECTRICAL LTD on 17/05/2025 08:22 am

till the equipment is commissioned and handed over to customer will be the sole responsibility of the Indian representative/associates/agent/liaison office.

d. Refer **Annexure I** on "Guidelines for Indian Agents".

7. In case of imported scope of supply, customs clearance & customs duty payment will be to BHEL account after the consignment is received at Indian Airport /Seaport. Bidders must provide all original documents required for completing the customs clearance along with the shipment.

   Warehousing charges due to incomplete or missing documentation will be to supplier's account. All offers for imported scope of supply by air, must be made from any of the gateway ports (within the country) indicated **(Refer Annexure II).**

8. The offers of the bidders who are on the banned list and also the offers of the bidders, who engage the services of the banned firms, shall be rejected. The list of the banned firms is available on BHEL website: http://www.bhel.com/vender_registration/vender.php

9. Business dealings with bidders will be suspended if they are found to have indulged in any malpractices/misconduct which are contrary to business ethics like bribery, corruption, fraud, pilferage, cartel formation, submission of fake/false/forged documents, certificates, information to BHEL or if they tamper with tendering procedure affecting the ordering process or fail to execute a contract, or rejection of 3 consecutive supplies or if their firms / works are under strike/lockout for a long period. Bidder may refer "Guidelines for Suspension of Business Dealings with Suppliers/ Contractors" available on https://bhel.com/guidelines-suspension-business-dealings-supplierscontractors for more details.

   The Bidder declares that they will not enter into any illegal or undisclosed agreement or understanding, whether formal or informal with other Bidder(s). This applies in particular to prices, specifications, certifications, subsidiary contracts, submission or non-submission of bids or any other actions to restrict competitiveness or to introduce cartelization in the bidding process. In case, the Bidder is found having indulged in above activities, suitable action shall be taken by BHEL as per extant policies / guidelines.

10. The bidder along with its associate/collaborators/sub-contractors/sub-vendors/consultants/service providers shall strictly adhere to BHEL Fraud Prevention Policy displayed on BHEL website http://www.edn.bhel.com and shall immediately bring to the notice of BHEL Management about any fraud or suspected fraud as soon as it comes to your notice.

11. Offer is to be submitted in English language only.

12. For this procurement, the local content to categorize a supplier as a Class-I local supplier/ Class-II local supplier/ Non-local supplier and purchase preference to Class-I local supplier, is as defined in Public procurement (Preference to Make in India), Order 2017 dated 16.09.2020 issued by DPIIT.

    In case of subsequent Orders issued by the Nodal Ministry, changing the definition of local content for the items of the NIT, the same shall be applicable even if issued after issue of this NIT, but before opening of price bids against this NIT. Default margin of purchase preference shall be 20% for Class-I local supplier only.

13. The Bidder shall mandatorily submit Declaration as mentioned under Rule 144(xi) of General Financial Rules, 2017 amendment dt 23.07.2020 issued by Ministry of Finance, Govt. of India. Where applicable, evidence of valid registration by the Competent Authority shall be attached.

The Competent Authority for the purpose of registration under this Order shall be the Registration Committee constituted by the Department for Promotion of Industry and Internal Trade (DPIIT). Refer Annexure-X for 'Restrictions under Rule 144(Xi) of General Financial Rules,2017 amendment dt: 23.07.2020'.

B. GUIDELINES FOR PREPARATION OF OFFER:

1. Quotation shall be submitted in Single Part Bid, Two Part Bid or Three Part Bid, as called for in the tender:

   - **SINGLE PART BID**: Technical and Commercial Bid with prices along with price summary & filled in BHEL Standard Commercial terms and conditions in a single sealed envelope.

   - **TWO PART BID**: Unpriced offer i.e. "Techno-commercial Bid" with filled in BHEL Standard Commercial terms and conditions in a sealed envelope **along with the copy of the "Price Bid" without the prices** should be enclosed in one cover and the cover must be super scribed **"Techno-commercial offer)** and Priced offer i.e. "Price Bid "containing price summary in a separate sealed envelope and must be super scribed **"Price Bid"**.

     Both these envelopes shall be enclosed in a single sealed envelope superscribed with enquiry number, due date of tender and any other details as called for in the tender document.

   - **THREE PART BID**: Pre-qualification Bid (Part-I), Techno Commercial Bid with filled in BHEL Standard Commercial terms and conditions (Part-II), and Price Bid (Part-III). All three envelopes shall be enclosed in a single sealed envelope superscribed with enquiry number, due date of tender and any other details as called for in the tender document.

   If any of the offers (Part I, Part II or Part III) are not submitted before the due date and time of submission (or) if any part of the offer is incomplete, the entire offer of the bidder is liable for rejection.

2. Supplier shall ensure to superscribe each envelope with RFQ number, RFQ Date, RFQ Due date and time, Item Description and Project clearly & boldly. Also mention on the envelope whether it is "Techno Commercial Bid" or "Price Bid" or "Pre-Qualification Bid".

   Please ensure complete address, department name and purchase executive name is mentioned on the envelope (before dropping in the tender box or handing over) so that the tender is available in time for bid opening.

3. BHEL standard Commercial Terms and Conditions (duly filled, signed & stamped) must accompany Technical-Commercial offer without fail and should be submitted in original only.

   The above indicated submission of Offers in "sealed envelope/hard copy" as mentioned in points B.1-B.3 is applicable for tenders that are not floated through E-Procurement System (EPS).

4. Validity: Unless otherwise specified in SCC (special commercial conditions of contract), the offer will be valid for a period of 90 days from the date of Part-I bid opening and in case of Negotiation/Counter-offer/Reverse Auction, price validity will apply afresh for a period of 60 days from the date of according final price by bidder (or) up to original validity period, whichever is later.

5. Any of the terms and conditions not acceptable to supplier, shall be explicitly mentioned in the Techno-Commercial Bid.

   If no deviations are brought out in the offer it will be treated as if all terms and conditions of this enquiry are accepted by the supplier without deviation.

6. Deviation to this specification/item description, if any, shall be brought out clearly indicating "DEVIATION TO BHEL SPECIFICATION" without fail, as a part of Techno-Commercial Bid.

   If no deviations are brought out in the offer it will be treated as if the entire specification of this enquiry is accepted without deviation.

7. Suppliers shall submit one set of original catalogue, datasheets, bill of materials, dimensional drawings, mounting details and/or any other relevant documents called in purchase specification as part of Technical Bid.

8. "Price Bid" shall be complete in all respects containing price break-up of all components along with all applicable taxes and duties, freight charges (if applicable) etc. Once submitted no modification / addition / deletion will be allowed in the "Price Bid." Bidders are advised to thoroughly check the unit price, total price to avoid any discrepancy.

9. In addition, bidder shall also quote for erection & commissioning charges/erection supervision & commissioning charges (E&C service charges), documentation charges, testing Charges (type & routine), training charges etc. if & as applicable along with corresponding tax. The price summary must indicate all the elements clearly.

10. Wherever applicable, bidders should indicate "Lumpsum" Erection and Commissioning (or) Erection Supervision and Commissioning charges, as applicable (including To & Fro Fare, Boarding, Lodging, Local Conveyance etc.) for carrying out E&C activity and further handing over to customer.

    The quotation shall clearly indicate scope of work, likely duration of commissioning, pre-commissioning checklist (if any).

11. Wherever bidders require PAC (Project Authority Certificate)/applicable certificates for import of raw materials, components required for DECC, EPCG Power Projects, Export Projects or other similar projects wherein supplies are eligible for customs duty benefits, lists and quantities of such items and their values (CIF) has to be mentioned in the offer. Prices must be quoted taking into account of such benefits.

12. Prices should be indicated in both figures & words**.** Bid should be free from correction/overwriting, using corrective fluid, etc. Any interlineation, cutting, erasure or overwriting shall be valid only if they are attested under full signature(s) of person(s) signing the bid else bid shall be liable for rejection.

    Any typographical error, totalling mistakes, currency mistake, multiplication mistake, summing mistakes etc. observed in the price bids will be evaluated as per **Annexure III** "Guidelines for dealing with Discrepancy in Words & Figures – quoted in price bid" and BHEL decision will be final.

13. Documents submitted with the offer shall be signed and stamped in each page by authorized representative of the bidder. However, this requirement is not mandatory for offers uploaded through E-Procurement System (EPS).

C. <u>GUIDELINES FOR OFFER SUBMISSION:</u>

The under-mentioned clauses 1, 2&3 will not be applicable for EPS tenders.

1. Offers / Quotations must be dropped in tender box before 13.00 Hrs. on or before due date mentioned in RFQ. The offers are to be dropped in the proper slot of the Tender Box kept in tender opening room near reception.

   Tenders are opened on 3 days in a week (Monday/Wednesday/Friday).

2. E-Mail/ Internet/EDI offers received in time shall be considered only when such offers are complete in all respects. In case of offers received through E-mail, please send the offer to the email ID specified in the SCC document of the tender.

3. Offers of Vendors who already have a valid Technical/Commercial MOU with BHEL-EDN for the items of the RFQ shall mention the relevant MOU reference no. and give only such other details not covered in the MOU.

4. In cases where tender documents are bulky, or due to some reasons tender documents are required to be submitted by hand or through posts/couriers, the offers are to be handed over either of the two purchase officers whose names are mentioned in the SCC document of tender RFQ.
5. Tenders will be opened on due date, time and venue as indicated in the RFQ in the presence of bidders at the venue indicated in the RFQ. For EPS tenders, e-mail notifications will be automatically generated and forwarded to registered e-mail ID/s of bidders during opening of tenders.
6. Bidder will be solely responsible:
   a. for submission of offers before due date and time. Offers submitted after due date and time will be treated as "Late offers" and will be rejected.

   b. for depositing offers in proper sealed condition in the tender box. If the bidder drops the tender in the wrong box (or) if the tender document is handed over to the wrong person, BHEL will not be responsible for any such delays.

   c. for offers received through email etc., suppliers are fully responsible for lack of secrecy on information and ensuring timely receipt of such offers in the tender box before due date & time (This clause will not be applicable for EPS tenders).

   The above indicated submission of Offers as mentioned in points 6.a-6.c is applicable for tenders that are not floated through online procurement portal considered by BHEL.

   d. In case of e-tender, all required documents should be uploaded before due date and time. Availability of power, internet connections, system/software requirements etc. will be the sole responsibility of the bidder.

      Wherever assistance is needed for submission of e-tenders, help-line numbers as available in the web-site of service provider of BHEL may be contacted.

      Purchase Executive/ BHEL shall not be responsible for any of the activities relating to submission of offer.

D. <u>PROCESSING OF OFFERS RECEIVED:</u>

1. Any discount/ revised offer submitted by the supplier on its own shall be accepted provided it is received on or before the due date and time of offer submission (i.e. Part-I bid).

   The discount shall be applied on pro-rata basis to all items unless specified otherwise by the bidder.
2. Changes in offers or Revised offers given after Part-I bid opening shall not be considered as a part of the original offer unless such changes/revisions are requested by BHEL.

   In case of withdrawal of any Technical/Commercial deviation(s) by the bidder before opening of price bids/conducting the Reverse Auction, revision of price/price impact bid, if any will not be accepted.
3. In case there is no change in the technical scope and/ or specifications and/ or commercial terms & conditions, the supplier will not be allowed to change their price bid after technical bids are opened (after the due date and time of tender opening).
4. In case of changes in scope and/ or technical specifications and/ or commercial terms & conditions by BHEL

and it accounts for price implications from bidders, all techno-commercially acceptable bidders shall be asked by BHEL (after freezing the scope, technical specifications and commercial terms & conditions) to submit the impact of such changes on their price bid.

Impact price will be applicable only for changes in technical specification / commercial conditions by BHEL. The impact price must be submitted on or before the cut-off date specified by BHEL and the original price bid and the price impact bid will be opened together at the time of price bid opening.

5. Un-opened bids (including price bids) will be returned to the respective bidders after release of Purchase order.

   Regarding Offers for EPS tenders that get rejected on PQC/ techno-commercial grounds, the bids for the subsequent parts will not be opened i.e., both technical bid and price bid (Parts-II & III) will not be opened in case of rejection on PQC ground and price bid (Part-II/Part-III, as applicable) will not be opened in case of rejection on techno-commercial ground.

6. After receipt of Purchase Order, supplier should submit required documents viz., specified drawings, bill of materials, datasheets, catalogues, quality plan, test procedure, type test report, O & M Manuals and/or any other relevant documents as per Specification/Purchase Order, as and when required by BHEL/Customer.

7. Any deviation to the terms and conditions not mentioned in the quotation by supplier in response to this enquiry will not be considered, if put forth subsequently or after issue of Purchase Order, unless clarification is sought for by BHEL and agreed upon in the Purchase Order.

8. Evaluation shall be on the basis of delivered cost (i.e. “Total Cost to BHEL").

   “Total Cost to BHEL” shall include total basic cost, packing & forwarding charges, taxes and/or duties (as applicable), freight charges, taxes on Services, customs clearance charges for imported items, any other cost indicated by bidder for execution of the contract and loading factors (for non-compliance to BHEL Standard Commercial Terms & Conditions).

   Benefits arising out of Nil Import Duty on DEEC, EPCG, DFIA Projects, Physical Exports or such 100% exemptions (statutory benefits), project imports, customer reimbursements of statutory duties (like Basic Customs Duty and Cess on customs duty), Input tax credits as applicable will also be taken into account for arriving at the Total cost to BHEL (wherever applicable and as indicated in SCC document of tender).

   For EPS tenders, it shall be noted that the prices (including discounts) vis-a-vis currency quoted in EPS portal only will be considered as Final for the purpose of evaluation of the lowest bidder.

   Bidder shall ensure to indicate the applicable taxes against each line item in online portal, failing to which the same will be considered as inclusive/NIL.

   In the course of evaluation, if more than one bidder happens to occupy L-1 status, effective L-1 will be decided by soliciting discounts from the respective L-1 bidders.

   Incase more than one bidder happens to occupy the L-1 status even after soliciting discounts, the L-1 bidder shall be decided by a toss/draw of lots, in the presence of the respective L-1 bidder(s) or their representative(s).

   Ranking will be done accordingly. BHEL’s decision in such situations shall be final and binding.

9. The evaluation currency for this tender shall be INR. For evaluation of offers in foreign currency, the exchange rate (TT selling rate of SBI) shall be taken as under:

Single part bids: Date of tender opening

Two/three part bids: Date of Part-I bid opening

Reverse Auction: Date of Part-I bid opening

In case of Performance Bank Guarantee (PBG) also, exchange rate will be considered as mentioned above for converting foreign currency to Indian currency and vice versa.

If the relevant day happens to be a bank holiday, then the exchange rate as on the previous working day of the bank (SBI) shall be taken.

10. Ranking (L-1, L-2 etc.) shall be done only for the techno-commercially acceptable offers.

E. <u>INFORMATION ON PAYMENT TERMS:</u>

1. All payments will be through Electronic Fund transfer (EFT). Vendor has to furnish necessary details as per BHEL standard format **(Refer Annexure IV)** for receiving all payments through NEFT. (Applicable for Indian vendors only).
2. In case of High Sea Sales transaction, customs clearance of the consignment landed on Indian Sea/Air ports will be done by BHEL based on the original HSS documents provided by vendors.

   All warehousing charges due to delay in submission of complete and or correct HSS documents to BHEL will be to supplier's account only. Such recovery will be made out of any of the available bills **(Refer Annexure V)**.
3. Statutory deductions, if any, will be made and the deduction certificate shall be issued.

   A. In case vendor does not provide PAN details, the TDS deduction shall be at the maximum percentage stipulated as per the provisions of Income Tax Act.

   In addition to the above, Foreign vendors shall also submit relevant details of their bankers like Swift Code, Banker's Name &Address etc.

   B. TDS deduction as per section 51 of CGST Act,2017 shall be applicable as per Gazette Notification No. 50/2018-Central Tax, Dated: 13th September 2018. TDS deduction is also applicable on purchase of goods as per the latest notification under section 194Q, and subsequent notification(s) as and when released by Govt. authorities.
4. Procurement of Goods/ Works/ Services/ Consultancy Services [under clause relating to "Income Tax and Corporate Tax" or "TDS" of Model ITBs]

   a) Provision w.r.t. TDS on Purchase of Goods under section 194Q of Income Tax Act applicable from 01.07.2021 is as under:

      i. TDS as applicable will be deducted by BHEL under section 194Q of the Income Tax Act, 1961 on Purchases exceeds, the amount of Rupees. 50 Lakhs or limit defined therein from time to time during the financial year under the Indian Income Tax act 1961.

      ii. Since BHEL is liable to deduct Income Tax TDS under section 194Q, the provision of TCS as per section 206C(1H) of the Income Tax Act, 1961 shall not be applicable.

   b) Higher rate of TDS for non-filers of ITR as per Section 206AB of Income Tax Act, 1961, in case of any vendor who does not filed their Income Tax Return for both of the two previous years preceding to current year and aggregate amount of TDS is more than or equal to Rs. 50,000/- in each of those previous two years (or limit defined by Govt. from time to time), then TDS will be deducted at the higher of following rates:

      (i) Twice the rate mentioned in relevant TDS section.

(ii) Twice the rate or rates in force

(iii) 5%

5. Incomplete documentation will not be accepted. Delayed submission of invoice / documents may result in corresponding delay in payment. In this connection, request to also refer clause: G (Refer Page.11) about invoicing & payment formalities under GST regime.

   Applicable documents shall be submitted to the purchaser at the time of execution of supplies/services for availing GST input credits.

6. Bank charges of Seller's bank shall be to Seller's account and bank charges of Owner's bank other than Bill collection charges shall be to owner's account. Bill collection charges will be borne by Seller.

F. STANDARD PAYMENT TERMS OF BHEL-EDN:

PURCHASE ORDERS FOR:	SUPPLY WITH SERVICE(S)	SUPPLY ONLY
INDIGENOUS PROCUREMENT	i. 100% payment of the basic price of Goods with 100% GST on the goods price will be paid in 45 days of Delivery of consignment or 15 days from the date of submission of complete set of documentation, whichever is later. (or) ii. 100% payment of the basic price of Goods with 100% GST on the goods price will be paid against Letter of Credit with usance period of 120 days from Delivery of consignment against submission of complete set of documents. LC processing charges viz., opening, amendment / discrepancy (if & as applicable) will be to supplier's account. Note: In case PBG is not furnished, only 90% payment will be released against 100% claim without the consent of Vendor. This 10% basic amount withheld towards PBG will be paid either against submission of supplementary invoice & Original PBG (or) against supplementary invoice without PBG after expiry of Warranty period.	i.100% payment of the basic price of Goods with 100% GST on the goods price will be paid in 45 days of Delivery of consignment or 15 days from the date of submission of complete set of documentation, whichever is later. (or) ii.100% payment of the basic price of Goods with 100% GST on the goods price will be paid against Letter of Credit with usance period of 120 days from Delivery of consignment against submission of complete set of documents. LC processing charges viz., opening, amendment / discrepancy (if & as applicable) will be to supplier's account.

IMPORT PROCUREMENT	100% payment of the basic price of Goods will be paid against usance draft of 45 days from arrival of **consignment at destination as per contractual INCOTERMS** against submission of complete set of documents. Note: In case PBG is not furnished, only 90% payment will be released against 100% claim without the consent of Vendor. This 10% basic amount withheld towards PBG will be paid either against submission of supplementary invoice & Original PBG (or) against supplementary invoice without PBG after expiry of Warranty period.	100% payment of the basic price of Goods will be paid against usance draft of 45 days from arrival of **consignment at destination as per contractual INCOTERMS** against submission of complete set of documents.
HIGH-SEA SALES PROCUREMENT	i) 100% payment of the basic price of Goods will be paid in 45 days from **arrival of consignment at destination (in India as per contractual INCOTERMS)** or 15 days from the date of submission of complete set of dispatch documents, whichever is later. (or) ii) 100% payment of the basic price of Goods with 100% GST on the goods price will be paid against **Letter of Credit with usance period of 120 days from arrival of consignment at destination (in India as per contractual INCOTERMS)** against submission of complete set of documents. LC processing charges viz., opening, amendment / discrepancy (if & as applicable) will be to supplier's account. Note: In case PBG is not furnished, only 90% payment will be released against 100% claim without the consent of Vendor. This 10% basic amount withheld towards PBG will be paid either against submission of supplementary invoice & Original PBG (or) against supplementary invoice without PBG after expiry of Warranty period.	i) 100% payment of the basic price of Goods will be paid in 45 days from **arrival of consignment at destination (in India as per contractual INCOTERMS)** or 15 days from the date of submission of complete set of dispatch documents, whichever is later. (or) ii) 100% payment of the basic price of Goods with 100% GST on the goods price will be paid against **Letter of Credit with usance period of 120 days from arrival of consignment at destination (in India as per contractual INCOTERMS)** against submission of complete set of documents. LC processing charges viz., opening, amendment / discrepancy (if & as applicable) will be to supplier's account.

1. **Erection and Commissioning:**

Evaluation methodology: Unless and otherwise specified in SCC, E&C charges should not be less than 10% of the main supply value. In case the quoted total E&C value is less than 10% of the main supply value, BHEL shall evaluate Bidders Price deducting differential amount from main supply price proportionally from all items and apportioning towards E&C charges.

Payment term: 100% E&C charges along with tax as applicable, will be paid in 15 days from the date of submission of supplementary invoice/documents against proof of completion of E&C.

2. Erection Supervision and Commissioning:

Evaluation methodology: Unless and otherwise specified in SCC, E,S&C charges should not be less than 5% of the main supply value. In case the quoted total E&C value is less than 5% of the main supply value, BHEL shall evaluate Bidders Price deducting differential amount from main supply price proportionally from all items and apportioning towards E,S&C charges.
Payment term: 100% E,S&C charges along with tax as applicable, will be paid in 15 days from the date of submission of supplementary invoice/documents against proof of completion of E,S&C.

3. Comprehensive Annual Maintenance Contract:

Evaluation methodology: Unless and otherwise specified in SCC, CAMC will be applicable for a period of 04 years from the date of expiry of warranty period (or) from the date of completion of commissioning of equipment, whichever is later and the total CAMC value should not be less than 20% of the main supply value. In case the quoted total CAMC value is less than 20% of the main supply value, BHEL shall evaluate Bidders Price deducting differential amount from main supply price proportionally from all items and apportioning towards CAMC charges.

Payment terms: 100% CAMC charges along with tax as applicable, will be paid in 15 days from the date of submission of supplementary invoice/documents against proof of completion of CAMC on yearly basis.

4. Terms of Payment for Training: 100% payment will be made in 45 days from the date of completion of Training or 15 days from the date of submission of complete set of invoice along with documentary evidence, whichever is later.

LOADING FACTORS FOR DEVIATION IN PAYMENT TERMS (APPLICABLE FOR IMPORT PROCUREMENT ONLY):

1) For offers received with Sight draft payment term in place of Usance draft, loading applicable will be 1.0% of basic value.

2) For offers received with Letter of Credit payment term with Usance of 45 days, loading applicable will be 2.5% of basic value.
   Additional loading of 2% will be applicable for payment term as Letter of Credit at Sight.

5. Any payment term with credit period of less than 45 days for indigenous supply/HSS and any other variation of payment terms are liable for rejection.

6. Standard payment terms indicated in Clauses: F (a), (b), (c), (d), (e), (f), (g), (h), (i) & (j) will not attract any loading.

Note 1: Basic value of Purchase Order mentioned above will include all components of the purchase order and will exclude only taxes, duties, freight, training charges, E&C/E,S&C and AMC charges (wherever applicable). Wherever the Purchase Order is split into import portion and indigenous portion of supply, minimum % to be quoted for Services, wherever mentioned, will be of both purchase order values put together.

Note 2: In case of multiple packages/units in a power plant, payment of E&C/E,S&C charges will be processed on pro-rata basis.

Note 3: No deviation will be permitted from the duration of Guarantee/Warranty and/or Comprehensive Annual Maintenance Contract period specified in SCC.

Note 4: Indigenous bidder may opt to quote with payment through Letter of Credit with usance period of 120 days. Bank charges of seller's bank shall be to seller's account and bank charges of BHEL's bank other than bill collection charges shall be to BHEL's account. Bill collection charges will be borne by seller.

G. Terms & Conditions to be complied under GST regime:

1. All invoices to contain BHEL-EDN (buyer) GSTIN number: 29AAACB4146P1ZB. However for CGST +SGST/UGST billing outside the state of Karnataka, invoice has to be generated with BHEL's Nodal Agency GSTIN number. Address of Nodal Agency along with GSTIN number will be provided by BHEL at the time of issuing dispatch clearance.

2. The Bidder shall mention Bidder's GSTIN number in all quotations and Invoices submitted.

3. The Bidder shall also mention HSN (Harmonized System of Nomenclature) / SAC (Services Accounting Code) mandatorily in all quotations and invoices submitted.

4. Invoice submitted should be in the format as specified under GST Laws viz., all details as mentioned in Invoice Rules like GST registration number(GSTIN), invoice number with date of issue, quantity, rate, value, taxes with nomenclature – CGST, SGST, UGST, IGST mentioned separately, HSN Code / SAC Code etc. Invoice should be submitted in original for buyer plus duplicate for credit availment.

5. Payment of GST to Vendor will be made only if it is matching with data uploaded by the Vendor in GST portal.

6. For invoices paid on Reverse charge basis – "Tax payable on reverse charge basis" to be mentioned on the invoice.

7. In case GST credit is delayed/denied to BHEL due to non/delayed receipt of goods and/or tax invoice or expiry of timeline prescribed in GST law for availing such ITC, or any other reasons not attributable to BHEL, GST amount will be recoverable from vendor along with interest levied/ leviable on BHEL.

8. In case vendor delays declaring such invoice in his return and GST credit availed by BHEL is denied or reversed subsequently as per GST law, GST amount paid by BHEL towards such ITC reversal as per GST law will be recoverable from vendor/contractor along with interest levied/ leviable on BHEL.

9. Vendor should intimate BHEL immediately on the same date of invoicing without any delay.

10. In case of discrepancy in the data uploaded by supplier in the GSTN portal or in case of any shortages or rejection in the supply, then BHEL will not be able to avail the tax credit and will notify the supplier of the same. Supplier has to rectify the data discrepancy in the GSTN portal or issue credit note (details to be uploaded in GSTN portal) for the shortages or rejections in the supplies, within the calendar month notified by BHEL.

11. Bidders to note that Rules & Regulations pertaining to E-way bill system are to be strictly adhered to, as and when notified by Govt. authorities.

12. As per Notification 88/2020-Central Tax dated 10th November 2020 (applicable w.e.f. 01 January 2021), the turnover for applicability of E-invoicing provisions has been reduced from 500 crores to 100 crores. In other words, registered person [other than a SEZ unit and those referred in Rule 54(2), 54(3), 54(4) and 54(4A) of the CGST Rules], whose aggregate turnover in any preceding financial year from 2017-18 onwards exceeds 100 crores, is required to comply with the requirement of IRN and QR code in respect of supply of goods or services or both to a registered person or for exports.

H. Performance bank guarantee (PBG):

Performance bank guarantee (PBG) will be applicable as called in the tender documents. Unless otherwise specified in the SCC, the PBG against performance of the contract shall be valid for a period of 24 months from the date of delivery of goods + claim period of 03 months, for a value equal to 10 % of the basic value of the purchase order which will include all components of the purchase order and will exclude only taxes, duties, freight, training charges, E&C/E,S&C and AMC charges (wherever applicable).

1. The BG issued in Indian Rupees by Banks in India is to be executed on Non-Judicial Stamp paper/e-stamp paper of appropriate value as per Stamp Act prevailing in the State(s) where the BG is submitted or is to be acted upon or the rate prevailing in the State where the BG was executed, whichever is higher. The Stamp Paper/e-stamp paper shall be purchased in the name of Vendor/Bank issuing the guarantee.
2. No deviation for the duration and value of PBG will be permitted.
3. PBG shall be from any of the BHEL consortium of bankers **(refer Annexure VI)**.
4. PBGs from nationalized banks are also acceptable.
5. PBG should be sent directly by the bank to the dealing executive mentioned in the purchase order located at the address mentioned in the purchase order.
6. PBG should be in the format specified **(refer Annexure VII)**. No deviation to this format will be allowed. However in case BHEL changes the PBG format, bidder shall honor the same.
7. Bank Guarantee should be enforceable in Bangalore.
8. In Case of Bank Guarantees submitted by Foreign Vendors-
   a. From Nationalized/Public Sector / Private Sector/ Foreign Banks (BG issued by Branches in India) can be accepted subject to the condition that the Bank Guarantee should be enforceable in Bangalore.
   b. From Foreign Banks (wherein Foreign Vendors intend to provide BG from local branch of the Vendor Country's Bank)

   b.1 Please note that Bank Guarantee issued by any of the Consortium Banks only will be accepted by BHEL. As such, Foreign Vendor needs to make necessary arrangements for issuance of Counter-Guarantee by Foreign Bank in favor of the Indian Bank's (BHEL's Consortium Bank) branch in India. It shall be noted that all charges for issuance of Bank Guarantee/ counter- Guarantee should be borne by the Foreign Vendor.
   b.2 In case, Foreign Vendors intend to provide BG from Overseas Branch of our Consortium Bank (e.g. if a BG is to be issued by SBI Frankfurt), the same is acceptable. However, the procedure at sl.no. b.1 is required to be followed.
   b.3 The BG issued may preferably be subject to Uniform Rules for Demand Guarantees (URDG) 758 (as amended from time to time).
9. Expired PBGs will be returned only after expiry of the claim period.
10. PBG shall not be applicable for spares.

I. PURCHASE PREFERENCE FOR MSE(MICRO AND SMALL ENTERPRISES) VENDORS:

Purchase preference will be given to MSEs as defined in Public Procurement Policy for Micro and Small Enterprises (MSEs) Order, 2012 dated 23.03.2012 issued by Ministry of Micro, Small and Medium Enterprises and its subsequent Orders/Notifications issued by concerned Ministry. If the bidder wants to avail the Purchase preference, the bidder must be the manufacturer of the offered product in case of bid for supply of goods.

Traders are excluded from the purview of Public Procurement Policy for Micro and Small Enterprises. Relevant documentary evidence in this regard shall be uploaded along with the bid in respect of the offered product. Purchase preference to Micro and Small Enterprises clause in the bid, the same will get precedence over this clause.

a. If tendered quantity is Splittable: In tender, participating MSEs quoting price within price band of L1+15 percent shall also be allowed to supply a portion of requirement by bringing down their price to L1 price in a situation where L1 price from someone other than a MSE and such MSE shall be allowed to supply at least 25% of total tendered value. In case of more than one such MSE, the supply shall be shared proportionately (to tendered quantity).

- 3% of the 25% will be earmarked for women owned MSEs.
- 25% of the 25% (i.e., 6.25% of the total enquired quantity) will be earmarked for SC/ST owned MSE firms.
- In case where no SC/ST category firms have not participated in the tender, the 6.25% of earmarked quantity for SC/ST owned MSE firms will be distributed among the other eligible MSE vendors who have participated in the tender.

b. If tendered quantity is Non-Splittable: If L-1 is not an MSE and MSE Seller (s) has/have quoted price within L-1+ 15% of margin of purchase preference /price band defined in relevant policy, such Seller shall be given opportunity to match L-1 price and contract will be awarded for 100% of total value.

J. INTEGRITY COMMITMENT IN THE TENDER PROCESS, AND EXECUTION OF CONTRACTS:

1. Commitment by BHEL: BHEL commits to take all measures necessary to prevent corruption in connection with the Tender process and execution of the Contract. BHEL will, during the tender process, treat all bidder / suppliers in a transparent and fair manner, and with equity.

2. Commitment by Bidder(s)/ Contractor(s):

   a. The Bidder(s)/ Contractor(s) commit(s) to take all measures to prevent corruption and will not directly or indirectly try to influence any decision or benefit which he is not legally entitled to.
   b. The Bidder(s)/ Contractor(s) will not enter with other Bidder(s) into any undisclosed agreement or understanding or any actions to restrict competition.
   c. The Bidder(s)/ Contractor(s) will not commit any offence under the relevant Acts. The Bidder(s)/ Contractor(s) will not use improperly, for purposes of competition or personal gain or pass on to others, any information or document provided by BHEL as part of business relationship.
   d. The Bidder(s)/ Contractor(s) will, when presenting his bid, disclose any and all payments he has made, and is committed to or intends to make to agents, brokers or any other intermediaries in connection with the award of the contract and shall adhere to the relevant guidelines issued from time to time by Government of India/ BHEL.

   If the Bidder(s) / Contractor(s), before award or during execution of the Contract commit(s) a transgression of the above or in any other manner such as to put his reliability or credibility in question, BHEL is entitled to disqualify the Bidder(s) / Contractor (s) from the tender process or terminate the contract and/ or take suitable action as deemed fit.

K. Integrity Pact (IP):

a) IP is a tool to ensure that activities and transactions between the Company and its Bidders/ Contractors are handled in a fair, transparent and corruption free manner.
For details of Independent External Monitors (IEMs) on the present panel appointed by BHEL with the approval of CVC to oversee implementation of IP in BHEL, kindly refer BHEL website www.bhel.com

b) The IP as enclosed with the tender is to be submitted (duly signed by authorized signatory) along with techno-commercial bid (Part-I, in case of two/three part bid).
Only those bidders who have entered into such an IP with BHEL would be competent to participate in the bidding. In other words, entering into this Pact would be a preliminary qualification.

c) Please refer Section-8 of the IP for Role and Responsibilities of IEMs (Annexure IX). In case of any complaint arising out of the tendering process, the matter may be referred to any of the above IEM(s). All correspondence with the IEM/s shall be done through email only.

Note: No routine correspondence shall be addressed to the IEM (phone/ post/ email) regarding the clarifications, time extensions or any other administrative queries, etc. on the tender issued. All such clarification/ issues shall be addressed directly to the tender issuing (procurement) department's officials whose contact details are indicated in SCC document of tender.

L. Conflict of Interest among Bidders/Agents:

"A bidder shall not have conflict of interest with other bidders. Such conflict of interest can lead to anti-competitive practices to the detriment of Procuring Entity's interests. ***The bidder found to have a conflict of interest shall be disqualified.*** *A bidder may be considered to have a conflict of interest with one or more parties in this bidding process, if:*

a) they have controlling partner (s) in common; ***or***

b) they receive or have received any direct or indirect subsidy/ financial stake from any of them; ***or***

c) they have the same legal representative/agent for purposes of this bid; ***or***

d) they have relationship with each other, directly or through common third parties, that puts them in a position to have access to information about or influence on the bid of another Bidder; ***or***

e) Bidder participates in more than one bid in this bidding process. Participation by a Bidder in more than one Bid will result in the disqualification of all bids in which the parties are involved. However, this does not limit the inclusion of the components/ sub-assembly/ Assemblies from one bidding manufacturer in more than one bid; ***or***

f) *In cases of agents quoting in offshore procurements, on behalf of their principal manufacturers, one agent cannot represent two manufacturers or quote on their behalf in a particular tender enquiry. One manufacturer can also authorise only one agent/dealer. There can be only one bid from the following:*

1. *The principal manufacturer directly or through one Indian agent on his behalf; and*
2. *Indian/foreign agent on behalf of only one principal;*

or

g) *A Bidder or any of its affiliates participated as a consultant in the preparation of the design or technical specifications of the contract that is the subject of the Bid;* ***or***

h) *In case of a holding company having more than one independently manufacturing units, or more than one unit having common business ownership/management, only one unit should quote. Similar restrictions would apply to closely related sister companies. Bidders must proactively declare such sister/ common business/ management units in same/ similar line of business."*

BHEL-IP

RFQ No. NJP0000091

INTEGRITY PACT

Between

Bharat Heavy Electricals Ltd. (BHEL), a company registered under the Companies Act 1956 and having its registered office at "BHEL House", Siri Fort, New Delhi - 110049 (India) hereinafter referred to as "The Principal", which expression unless repugnant to the context or meaning hereof shall include its successors or assigns of the ONE PART

and

_____, (description of the party along with address), hereinafter referred to as "The Bidder/ Contractor" which expression unless repugnant to the context or meaning hereof shall include its successors or assigns of the OTHER PART

Preamble

The Principal intends to award, under laid-down organizational procedures, contract(s) for Control desk and Furniture for NTPC Talcher 2X660MW _____ (hereinafter referred to as "Contract"). The Principal values full compliance with all relevant laws of the land, rules and regulations, and the principles of economic use of resources, and of fairness and transparency in its relations with its Bidder(s)/ Contractor(s).

In order to achieve these goals, the Principal will appoint panel of Independent External Monitor(s) (IEMs), who will monitor the tender process and the execution of the contract for compliance with the principles mentioned above.

Section 1- Commitments of the Principal

1.1 The Principal commits itself to take all measures necessary to prevent corruption and to observe the following principles: -

1.1.1 No employee of the Principal, personally or through family members, will in connection with the tender for, or the execution of a contract, demand, take a promise for or accept, for self or third person, any material or immaterial benefit which the person is not legally entitled to.

1.1.2 The Principal will, during the tender process treat all Bidder(s) with equity and reason. The Principal will in particular, before and during the tender process, provide to all Bidder(s) the same information and will not provide to any Bidder(s) confidential/ additional information through which the Bidder(s) could obtain an advantage in relation to the tender process or the contract execution.

1.1.3 The Principal will exclude from the process all known prejudiced persons.

1.2 If the Principal obtains information on the conduct of any of its employees which is a penal offence under the Indian Penal Code 1860 and Prevention of Corruption Act 1988 or any other statutory penal enactment, or if there be a substantive suspicion in this regard, the Principal will inform its Vigilance Office and in addition can initiate disciplinary actions.

Section 2 - Commitments of the Bidder(s)/ Contractor(s)

2.1 The Bidder(s)/ Contractor(s) commit himself to take all measures necessary to prevent corruption. The Bidder(s)/ Contractor(s) commits himself to observe the following principles during participation in the tender process and during the contract execution.

ನಂದಜೀ ಪಂಡಿತ್
NANDJEE PANDIT, ENGINEER/CE-MM-PR
BHEL-EDN, MYSURU ROAD, BENGALURU-560026

2.1.1 The Bidder(s)/ Contractor(s) will not, directly or through any other person or firm, offer, promise or give to the Principal or to any of the Principal's employees involved in the tender process or the execution of the contract or to any third person any material, immaterial or any other benefit which he/ she is not legally entitled to, in order to obtain in exchange any advantage of any kind whatsoever during the tender process or during the execution of the contract.

2.1.2 The Bidder(s)/ Contractor(s) will not enter with other Bidder(s) into any illegal or undisclosed agreement or understanding, whether formal or informal. This applies in particular to prices, specifications, certifications, subsidiary contracts, submission or non-submission of bids or any other actions to restrict competitiveness or to introduce cartelization in the bidding process.

2.1.3 The Bidder(s)/ Contractor(s) will not commit any penal offence under the relevant Indian Penal Code (IPC) and Prevention of Corruption Act; further the Bidder(s)/ Contractor(s) will not use improperly, for purposes of competition or personal gain, or pass on to others, any information or document provided by the Principal as part of the business relationship, regarding plans, technical proposals and business details, including information contained or transmitted electronically.

2.1.4 Foreign Bidder(s)/ Contractor(s) shall disclose the name and address of agents and representatives in India and Indian Bidder(s)/ Contractor(s) to disclose their foreign principals or associates. The Bidder(s)/ Contractor(s) will, when presenting his bid, disclose any and all payments he has made, and is committed to or intends to make to agents, brokers or any other intermediaries in connection with the award of the contract.

2.2 The Bidder(s)/ Contractor(s) will not instigate third persons to commit offences outlined above or be an accessory to such offences.

2.3 The Bidder(s)/ Contractor(s) shall not approach the Courts while representing the matters to IEMs and shall await their decision in the matter.

Section 3 - Disqualification from tender process and exclusion from future contracts

If the Bidder(s)/ Contractor(s), before award or during execution has committed a transgression through a violation of Section 2 above, or acts in any other manner such as to put his reliability or credibility in question, the Principal is entitled to disqualify the Bidder(s)/ Contractor(s) from the tender process, terminate the contract, if already awarded, exclude from future business dealings and/ or take action as per the separate "Guidelines on Banning of Business dealings with Suppliers/ Contractors", framed by the Principal.

Section 4 - Compensation for Damages

4.1 If the Principal has disqualified the Bidder (s) from the tender process before award / order acceptance according to Section 3, the Principal is entitled to demand and recover the damages equivalent to Earnest Money Deposit/ Bid Security.

4.2 If the Principal is entitled to terminate the Contract according to Section 3, or terminates the Contract in application of Section 3 above , the Bidder(s)/ Contractor (s) transgression through a violation of Section 2 above shall be construed breach of contract and the Principal shall be entitled to demand and recover from the Contractor an amount equal to 5% of the contract value or the amount equivalent to Security Deposit/ Performance Bank Guarantee , whichever is higher, as damages, in addition to and without prejudice to its right to demand and recover compensation for any other loss or damages specified elsewhere in the contract.

नंदजी पंडित, अभियंता/सी.ई.-एम.एम.-पी.आर.
NANDJEE PANDIT, ENGINEER/CE-MM-PR
BHEL-EDN, MYSURU ROAD, BENGALURU-560026

Section 5 - Previous Transgression

5.1 The Bidder declares that no previous transgressions occurred in the last 3 (three) years (to be reckoned from date of bid submission) with any other company in any country conforming to the anti-corruption approach in India that could justify his exclusion from the tender process. The date of such transgression, for the purpose of disclosure by the bidders in this regard, would be the date on which cognizance of the said transgression was taken by the competent authority. The transgression(s), for which cognizance was taken even before the said period of three years, but are pending conclusion, shall also be reported by the bidders.

5.2 If the Bidder makes incorrect statement on this subject, he can be disqualified from the tender process or the contract, if already awarded, can be terminated for such reason or action can be taken as per the separate "Guidelines on Suspension of Business dealings with Suppliers/ Contractors", framed by the Principal.

Section 6 - Equal treatment of all Bidder (s)/ Contractor (s) / Sub-contractor (s)

6.1 The Principal will enter into Integrity Pacts with identical conditions as this Integrity Pact with all Bidders and Contractors.

6.2 In case of a joint venture, all the partners of the joint venture should sign the Integrity Pact. In case of Sub-contracting, the Principal Contractor shall be solely responsible for the adherence to the provisions of IP by the sub-contractor(s).

6.3 The Principal will disqualify from the tender process all Bidders who do not sign this Integrity Pact or violate its provisions.

Section 7 - Criminal Charges against violating Bidders/ Contractors /Subcontractors

If the Principal obtains knowledge of conduct of a Bidder, Contractor or Subcontractor, or of an employee or a representative or an associate of a Bidder, Contractor or Subcontractor which constitutes corruption, or if the Principal has substantive suspicion in this regard, the Principal will inform the Vigilance Office.

Section 8 -Independent External Monitor(s)

8.1 The Principal appoints competent and credible panel of Independent External Monitor (s) (IEMs) for this Integrity Pact. The task of the IEMs is to review independently and objectively, whether and to what extent the parties comply with the obligations under this Integrity Pact on receipt of any complaint by them from the bidder(s).

8.2 The IEMs are not subject to instructions by the representatives of the parties and performs his functions neutrally and independently. He reports to the CMD, BHEL.

8.3 The IEMs shall be provided access to all documents/ records pertaining to the Contract, for which a complaint or issue is raised before them as and when warranted. However, the documents/records/information having National Security implications and those documents which have been classified as /Top Secret are not to be disclosed.

8.4 The Principal will provide to the IEMs sufficient information about all meetings among the parties related to the Contract provided such meetings could have an impact on the contractual relations between the Principal and the Contractor. The parties offer to the IEMs the option to participate in such meetings.

ನಂದಜೀ
नंदजी पंडित, अभियंता/सी.ई.-एम.एम.-पी.आर.
NANDJEE PANDIT, ENGINEER/CE-MM-PR
BHEL-EDN, MYSURU ROAD, BENGALURU-560026

8.5 The role of IEM is advisory and the advice of IEM is non- binding on the Organization. However, as IEMs are invariably persons with rich experience who have retired as senior functionaries of the government, their advice would help in proper implementation of the IP.

8.6 For ensuring the desired transparency and objectivity in dealing with the complaints arising out of the tendering process, the matter should be examined by the full panel of IEMs jointly, who would look into the records, conduct an examination, and submit their joint recommendations to the Management. In case the full panel is not available due to some unavoidable reasons, the available IEM(s) will conduct examination of the complaints. Consent of the IEM(s), who may not be available, shall be taken on record.

8.7 The IEMs shall examine all the representations/grievances/ complaints received by them from the bidders or their authorized representative related to any discrimination on account of lack of fair play in modes of procurement and bidding systems, tendering method, eligibility conditions, bid evaluation criteria, commercial terms & conditions, choice of technology/ specifications etc.

8.8 The CMD, BHEL shall decide the compensation to be paid to the IEMs and its terms and conditions.

8.9 IEMs should examine the process integrity, they are not expected to concern themselves with fixing of responsibility of officers. Complaints alleging mala fide on the part of any officer of the Principal should be looked into by the CVO of the Principal.

8.10 If the IEMs have reported to the CMD, BHEL, a substantiated suspicion of an offence under relevant Indian Penal Code / Prevention of Corruption Act, and the CMD, BHEL has not, within reasonable time, taken visible action to proceed against such offence or reported it to the Vigilance Office, the IEMs may also transmit this information directly to the Central Vigilance Commissioner, Government of India.

8.11 After award of work, the IEMs shall look into any issue relating to execution of Contract, if specifically raised before them. As an illustrative example, if a Contractor who has been awarded the Contract, during the execution of Contract, raises issue of delayed payment etc. before the IEMs, the same shall be examined by the panel of IEMs.

8.12 However, the IEMs may suggest systemic improvements to the management of the Principal, if considered necessary, to bring about transparency, equity and fairness in the system of procurement.

8.13 The word `Monitor' would include both singular and plural.

Section 9 - Pact Duration

9.1 This Integrity Pact shall be operative from the date this Integrity Pact is signed by both the parties. Any violation of the same would entail disqualification of the bidders and exclusion from future business dealings.

9.2 If any claim is made/ lodged during currency of this Integrity Pact, the same shall be binding and continue to be valid despite the lapse of this Pact as specified above, unless it is discharged/ determined by the CMD, BHEL.

Section 10 - Other Provisions

10.1 This Integrity Pact is subject to Indian Laws and exclusive jurisdiction shall be of the competent Courts as indicated in the Tender or Contract, as the case may be.

10.2 Changes and supplements as well as termination notices need to be made in writing.

ನಂದಜೀ ಪಂ...
नंद... पंडित, ...
NANDJEE PANDIT, ENGINEER/CE-MM-PR
BHEL-EDN, MYSURU ROAD, BENGALURU-560026

10.3 If the Bidder(s)/ Contractor(s) is a partnership or a consortium or a joint venture, this Integrity Pact shall be signed by all partners of the partnership or joint venture or all consortium members.

10.4 Should one or several provisions of this Integrity Pact turn out to be invalid, the remainder of this Integrity Pact remains valid. In this case, the parties will strive to come to an agreement to their original intentions.

10.5 Only those bidders / contractors who have entered into this Integrity Pact with the Principal would be competent to participate in the bidding. In other words, entering into this Integrity Pact would be a preliminary qualification.

10.6 In the event of any dispute between the Principal and Bidder(s)/ Contractor(s) relating to the Contract, in case, both the parties are agreeable, they may try to settle dispute through Mediation before the panel of IEMs in a time bound manner. If required, the Principal may adopt any mediation rules for this purpose. However, not more than five meetings shall be held for a particular dispute resolution. The fees/expenses on dispute resolution shall be equally shared by both the parties. In case, the dispute remains unresolved even after mediation by the panel of IEMs, either party may take further action as per the terms & conditions of the Contract.

नंदजी पंडित, अभियंता
NANDJEE PANDIT, ENGINEER/CE-MM PR
BHEL-EDN, MYSURU ROAD, BENGALURU-560026

For & On behalf of the Principal
(Office Seal)

Place Bangalore
Date 02/12/2025
Witness: Ramachandra A G
(Name & Address) RAMACHANDRA.A.G
BANGALORE

For & On behalf of the Bidder/ Contractor
(Office Seal)

Witness: _____
(Name & Address) _____
_____

Annexure-2

Clause on IP in the tender

Integrity Pact (IP)

(a) IP is a tool to ensure that activities and transactions between the Company and its Bidders/ Contractors are handled in a fair, transparent and corruption free manner. Following Independent External Monitors (IEMs) on the present panel have been appointed by BHEL with the approval of CVC to oversee implementation of IP in BHEL.

Sl	IEM	Email
1.	Dr. Sarat Kumar Acharya, Ex-CMD, NLC	iem1@bhel.in
2.	Shri R. Mukundan, IRPS (Retd.)	iem2@bhel.in
3.	Shri Madan Lal Meena, IAS (Retd.)	iem3@bhel.in

(b) The IP as enclosed with the tender is to be submitted (duly signed by authorized signatory) along with techno-commercial bid (Part-I, in case of two/ three part bid). Only those bidders who have entered into such an IP with BHEL would be competent to participate in the bidding. In other words, entering into this Pact would be a preliminary qualification.

(c) Please refer Section-8 of IP for Role and Responsibilities of IEMs. In case of any complaint arising out of the tendering process, the matter may be referred to any of the above IEM(s). All correspondence with the IEMs shall be done through email only.

Note:

No routine correspondence shall be addressed to the IEM (phone/ post/ email) regarding the clarifications, time extensions or any other administrative queries, etc on the tender issued. All such clarification/ issues shall be addressed directly to the tender issuing (procurement) department's officials whose contact details are provided below:

Details of contact person(s):

(1)
Name: Sh. Nandjee Pandit
Deptt: CE-MM-PR
Address: BHEL EDN Bengaluru-560026
Phone: 080-2699 8053/+91 9591976250
Email: nandjee@bhel.in

(2)
Name: Sh. Rabindra Kumar Pandey
Deptt: CE-MM-PR
Address: BHEL EDN Bengaluru-560026
Phone: 080-2698 9042/+91 9449853204
Email: rk.pandey@bhel.in

Annexure

Annexure I

Guidelines for Indian Agents

- **Definition of Indian Agent**: An Indian Agent of foreign prinicipal is an individual, a partnership, an association of persons, a private or pubile company, that carries our specific obligation(s) towards processing of BHEL tender or finalization or execution of BHEL's contract on behalf of the foreign supplier.

In case of yes, vendor to note the following and reply accordingly:

i. BHEL shall deal directly with foreign vendors, wherever required, for procurement of goods. However, if the foreign principal desires to avail of the services of an Indian agent, then the foreign principal should ensure compliance to regulatory guidelines - which require mandatory submission of an Agency Agreement.

ii. It shall be incumbent on the Indian agent and the foreign principal to adhere to the relevant guidelines of Government of India, issued from time to time.

iii. The Agency Agreement should specify the precise relationship between the foreign OEM / foreign principal and their Indian agent and their mutual interest in the business. All services to be rendered by agent/ associate, whether of general nature or in relation to the particular contract, must be clearly stated by the foreign supplier/ Indian agent. Any payment, which the agent or associate receives in India or abroad from the OEM, whether as commission or as a general retainer fee should be brought on record in the Agreement and be made explicit in order to ensure compliance to laws of the country.

iv. Any agency commission to be paid by BHEL to the Indian agent shall be in Indian currency only.

v. Tax deduction at source is applicable to the agency commission paid to the Indian agent as per the prevailing rules.

vi. In the absence of any agency agreement, BHEL shall not deal with any Indian agent (authorized representatives / associate / consultant, or by whatever name called) and shall deal directly with the foreign principal only for all correspondence and business purposes.

vii. The "Guidelines for Indian Agents of Foreign Suppliers" enclosed at annexure –'A' shall apply in all such cases.

viii. The supply and execution of the Purchase Order (including indigenous supplies/ service) shall be in the scope of the OEM/ foreign principal. The OEM/ foreign principal should submit their offer inclusive of all indigenous supplies/ services and evaluation will be based on 'total cost to BHEL'. In case OEM/ foreign principal recommends placement of order(s) towards indigenous portion of supplies/ services on Indian supplier(s)/ agent on their behalf, the credentials/ capacity/ capability of the Indian supplier(s)/ agent to make the supplies/ services shall be checked by BHEL as per the extant guidelines of Supplier Evaluation, Approval & Review Procedure (SEARP), before opening of price bids. In this regard, details may be checked as per Annexure-B (copy enclosed). It will be the responsibility of the OEM/ foreign principal to get acquainted with the evaluation requirements of Indian supplier/ agent as per SEARP available on www.bhel.com.

The responsibility for successful execution of the contract (including indigenous supplies/ services) lies with the OEM/ foreign principal. All bank guarantees to this effect shall be in the scope of the OEM/ foreign principal.

---x---

Vendor's Signature with Seal

Annexure-A

Guidelines for Indian Agents of Foreign Suppliers

1.0 There shall be compulsory registration of agents for all Global (Open) Tender and Limited Tender. An agent who is not registered with BHEL shall apply for registration in the registration form in line with SEARP.

1.1 Registered agents will file an authenticated Photostat copy duly attested by a Notary Public/Original certificate of the Principal confirming the agency agreement and giving the status being enjoyed by the agent and the commission/ remuneration/ salary/ retainership being paid by the principal to the agent before the placement of order by BHEL.

1.2 Wherever the Indian representatives have communicated on behalf of their principals and the foreign parties have stated that they are not paying any commission to the Indian agents, and the Indian representative is working on the basis of salary or as retainer, a written declaration to this effect should be submitted by the party (i.e. Principal) before finalizing the order.

2.0 Disclosure of particulars of agents/ representatives in India, if any.

2.1 Tenderers of Foreign nationality shall furnish the following details in their offers:

2.1.1 The Bidder(s)/ Contractor(s) of foreign origin shall disclose the name and address of the agents/ representatives in India if any and the extent of authorization and authority given to commit the Principals. In case the agent/ representative be a foreign Company, it shall be confirmed whether it is existing Company and details of the same shall be furnished.

2.1.2 The amount of commission/ remuneration included in the quoted price(s) for such agents/ representatives in India.

2.1.3 Confirmation of the Tenderer that the commission/ remuneration, if any, payable to his agents/ representatives in India, may be paid by BHEL in Indian Rupees only.

2.2 Tenderers of Indian Nationality shall furnish the following details in their offers:

2.2.1 The Bidder(s)/ Contractor(s) of Indian Nationality shall furnish the name and address of the foreign principals, if any, indicating their nationality as well as their status, i.e. whether manufacturer or agents of manufacturer holding the Letter of Authority of the Principal specifically authorizing the agent to make an offer in India in response to tender either directly or through the agents/ representatives.

2.2.2 The amount of commission/ remuneration included in the price (s) quoted by the Tenderer for himself.

2.2.3 Confirmation of the foreign principals of the Tenderer that the commission/ remuneration, if any, reserved for the Tenderer in the quoted price(s), may be paid by BHEL in India in equivalent Indian Rupees on satisfactory completion of the Project or supplies of Stores and Spares in case of operation items.

2.3 In either case, in the event of contract materializing, the terms of payment will provide for payment of the commission/ remuneration, if any payable to the agents/ representatives in India in Indian Rupees on expiry of 90 days after the discharge of the obligations under the contract.

2.4 Failure to furnish correct and detailed information as called for in paragraph 2.0 above will render the concerned tender liable to rejection or in the event of a contract materializing, the same liable to termination by BHEL. Besides this there would be a penalty of banning business dealings with BHEL or damage or payment of a named sum.

—x—

ANNEXURE - II
LIST OF INTERNATIONAL GATEWAY AIRPORTS

For air based consignment, terms of delivery will be on FCA basis from following listed airports only. Vendors are requested to verify this list for use before submission of offer.

SCHEDULE NO	COUNTRY	CURRENCY CODE	AIRPORT
D01	UK	GBP	LONDON (HEATHROW)
D02	UK	GBP	NEW CASTLE
D03	UK	GBP	OXFORD. CHETLAM
D04	UK	GBP	BRISTOL. WELLINGBOROUGH
D05	UK	GBP	BIRMINGHAM
DO6	UK	GBP	EAST MIDLANDS
D07	UK	GBP	MANCHESTER
D08	UK	GBP	LEEDS
D09	UK	GBP	GLASGOW
D10	FRANCE	EURO	PARIS (ROISSY) & LYON
D11	SWEDEN	EURO	STOCKHOLM
D12	SWEDEN	EURO	GOTHENBERG & MALMO
D13	ITALY	EURO	ROMA, MILAN
D14	ITALY	EURO	TURIN, BOLOGNA, FLORENCE
D15	NETHERLANDS	EURO	AMSTERDAM, ROTTERDAM
D16	AUSTRIA	EURO	VIENNA, LINZ, GRAZ
D17	BELGIUM	EURO	ANTWERP, BRUSSELS
D18	DENMARK	DKK	COPENHAGEN
D19	JAPAN	JPY	TOKYO, OSAKA
D20	SINGAPORE	SGD	SINGAPORE
D21	CANADA	CAD	TORONTO
D22	CANADA	CAD	MONTREAL
D23	USA	USD	NEW YORK, BOSTON
D24	USA	USD	CHICAGO
D25	USA	USD	SAN FRANCISCO, LOS ANGELES
D26	USA	USD	ALANTA, HOUSTON
D27	GERMANY	EURO	MUNICH, KOLN, DUSSELDORF, HANNOVER, HAMBURG, STUTTGART, DAMSTADT, MANIHIEM, NURUMBERG
D28	GERMANY	EURO	FRANKFURT
D29	GERMANY	EURO	BERLIN
D30	SWITZERLAND	SFR	BASLE, ZURICH, GENEVA
D31	SPAIN	EURO	BARCELONA
D32	AUSTRALIA	AUD	SYDNEY
D33	AUSTRALIA	AUD	MELBOURNE
D34	AUSTRALIA	AUD	PERTH
D35	CZECH	EURO	PRAGUE
D36	HONG KONG	HKD	HONG KONG
D37	NEW ZELAND	NZD	AUCKLAND
D38	RUSSIA	USD	MOSCOW
D39	SOUTH KOREA	USD	KIMPO INTERNATIONAL, INCHEON
D40	FINLAND	EURO	HELSINKI
D41	ROMANIA	EURO	BUCHAREST
D42	NORWAY	EURO	OSLO
D43	IRELAND	EURO	DUBLIN
D44	ISRAEL	USD	TEL AVIV
D45	UAE	USD	DUBAI
D46	OMAN	USD	MUSCAT
D47	EGYPT	USD	CAIRO
D48	TAIWAN	USD	TAIPEI
D49	UKRAINE	USD	KIEV
D50	CHINA	USD	SHANGHAI, SHENZHEN
D51	PHILIPINES	USD	MANILA
D52	MALAYSIA	USD	KUALALUMPUR, PE NANG
D53	CYPRUS	USD	LARNACA
D54	SOUTH AFRICA	USD	JOHANNESBERG, DURBAN
D55	SLOVAKIA	EURO	BARTISLOVA
D56	SAUDI ARABIA	SAR	RIYADH
D57	TURKEY	EURO	ISTANBUL
D58	THAILAND	USD	BANGKOK
D59	BRAZIL	USD	SAO PAULO, RIO DE JANEIRO

ANNEXURE – III

DISCREPANCY IN WORDS & FIGURES – QUOTED IN PRICE BID

Following guidelines will be followed in case of discrepancy in words & figures-quoted in price bid:

(a) If, in the price structure quoted for the required goods/services/works, there is discrepancy between the unit price and the total price (which is obtained by multiplying the unit price by the quantity), the unit price shall prevail and the total price corrected accordingly, unless in the opinion of the purchaser there is an obvious misplacement of the decimal point in the unit price, in which case the total price as quoted shall govern and the unit price corrected accordingly.

(b) If there is an error in a total corresponding to the addition or subtraction of subtotals, the subtotals shall prevail and the total shall be corrected; and

(c) If there is a discrepancy between words and figures, the amount in words shall prevail, unless the amount expressed in words is related to an arithmetic error, in which case the amount in figures shall prevail subject to (a) and (b) above.

(d) If there is such discrepancy in an offer, the same shall be conveyed to the bidder with target date upto which the bidder has to send his acceptance on the above lines and if the bidder does not agree to the decision of the purchaser, the bid is liable to be ignored.

ANNEXURE - IV

Electronic Funds Transfer (EFT) OR Paylink Direct Credit Form

Please Fill up the form in **CAPITAL LETTERS** only.
TYPE OF REQUEST(Tick one): _____ CREATE _____ CHANGE

BHEL Vendor / Supplier Code:
Company Name :
Permanent Account Number(PAN):
Address

City: PINCODE STATE

Contact Person(s)
Telephone No:
Fax No:
e-mail id:

1 Bank Name:
2 Bank Address:

3 Bank Telephone No:
4 Bank Account No:
5 Account Type: Savings/Cash Credit
6 9 Digit Code Number of Bank and branch appearing on MICR cheque issued by Bank
7 Bank IFSC Code(applicable for NEFT)
8 Bank IFSC code(applicable for RTGS) (Indian Financial System Code)

A I hereby certify that the particulars given above are true, correct and complete and that I, as a representative for the above named Company, hereby authorise BHEL, EDN, Bangalore to electronically deposit payments to the designated bank account.
B If the transaction is delayed or not effected at all for reasons of incomplete or incorrect information, I would not hold BHEL / transfering Bank responsible.
C This authority remains in full force until BHEL, EDN,Bangalore receives written notification requesting a change or cancellation.
D I have read the contents of the covering letter and agree to discharge the responsibility expected of me as a participant under ECS / EFT.

Date:

Authorised Signatory:
Designation: Telephone No. with STD Code

Company Seal

Bank Certificate

We certify that_____has an Account No_____ with us and we confirm that the bank details given above are correct as per our records.

Date: (.....)
Place: Signature

Please return completed form **along with a blank cancelled cheque or photocopy** thereof to:
Bharath Heavy Electricals Ltd,
Attn:
Electronics Division, Mysore Road,
BANGALORE - 560 026
In case of any Querry, please call concerned purchase executive.

ANNEXURE - V

PRESENT PROCEDURE FOR SALE IN TRANSIT (HIGH SEA SALES)

In case of High Sea Sales, vendor should submit following documents:

1. **ORIGINAL HIGH SEA SALES AGREEMENT**
   - Sale agreement (on Rs. 200/- non-judicial stamp paper & notarised with 2 witnesses with identity) has to be signed between BHEL and the Party importing material. The date of the sale documents should be in between the date of House Air Way Bill / Bill of Lading and before landing of the goods in Indian origin.
   - Following shall be included in the High Sea Sales Agreement:
     "THE BUYER ALSO UNDERTAKE DISCHARGES, THE OBLIGATION AND FULFILLMENT OF CONDITIONS, IF ANY, ATTACHED TO THE IMPORTATION, ASSESSMENT AND CLEARANCE OF THE GOODS IN TERMS CUSTOMS TARIFF ACT 1975, THE CUSTOMS ACT 1962 & RULES & REGULATIONS MADE THERE UNDER AND OTHER RELEVANT ACTS, ORDERS, NOTIFICATIONS".

2. **ORIGINAL INVOICES: INDIGENOUS RUPEE INVOICE & FOREIGN CURRENCY INVOICE**
   - Prices should be C.I.F., designated airport/seaport basis.
   - I.E.C., C.S.T., K.S.T. Nos. to be mentioned.
   - Description of item (Nomenclature), Unit & Quantity in both the Foreign Currency & the Indigenous Invoice in Rupee shall be exactly as per Purchase Order Description of item, Quantity and Unit. The Indigenous Invoice value shall be exactly as per Purchase Order value.
   - Seller should give Foreign Currency Invoice from the original consignor. The Foreign Currency Invoice value should be at least 2% (two per cent) less than the Indigenous Rupee Invoice value in equivalent foreign currency.

4. **ORIGINAL HOUSE AIR WAY BILL/ BILL OF LADING**
   - The sale agents should duly endorse House Air Way Bill (HAWB) for air shipments or original Bill of Lading (O.B.L.) for sea shipments and Foreign Currency Invoice in favour of BHEL-EDN.

5. **ORIGINAL CARGO ARRIVAL NOTICE FROM FORWARDER.**

6. **ORIGINAL DELIVERY ORDER ISSUED IN NAME OF BHEL-EDN.**

7. **ORIGINAL PACKING LIST.**

8. **A LETTER TO THE COMMISSIONER OF CUSTOMS FOR EFFECTING ABOVE SALE.**

9. **A LETTER TO THE DEPUTY ASSESSOR (OCTROI) FOR EFFECTING ABOVE SALE IN FAVOUR OF BHEL.**

REMARKS: In case vendor needs any clarifications on the above, the same may be sought in writing.

Sl No	Name of Bank
1	State Bank of India
2	Canara Bank
3	IDBI Bank Limited
4	ICICI Bank Limited
5	HDFC Bank Limited
6	Axis Bank
7	IndusInd Bank Limited
8	Bank of Baroda
9	Exim Bank
10	Indian Bank
11	Punjab National Bank
12	Union Bank of India
13	Yes Bank Limited
14	RBL Bank Ltd.
15	Indian Overseas Bank
16	Kotak Mahindra Bank Limited
17	Federal Bank Limited
18	Hongkong and Shanghai Banking Corporation Ltd

ANNEXURE-VII

BANK GUARANTEE FOR PERFORMANCE SECURITY

Bank Guarantee No:

Date:

To

NAME

& ADDRESSES OF THE BENEFICIARY

Dear Sirs,

In consideration of Bharat Heavy Electricals Limited (hereinafter referred to as the 'Employer' which expression shall unless repugnant to the context or meaning thereof, include its successors and permitted assigns) incorporated under the Companies Act, 1956 and having its registered office at _____[1] through its Unit at……..(name of the Unit) having awarded to (Name of the Vendor / Contractor / Supplier) with its registered office at_____[2] hereinafter referred to as the ' Vendor / Contractor / Supplier ', which expression shall unless repugnant to the context or meaning thereof, include its successors and permitted assigns), a contract Ref No.……dated …….[3] valued at Rs.……[4] (Rupees ----------)/FC……(in words……..) for ……[5] (hereinafter called the 'Contract') and the Vendor / Contractor / Supplier having agreed to provide a Contract Performance Bank Guarantee, equivalent to ……% (…. Percent) of the said value of the Contract to the Employer for the faithful performance of the Contract,

we, ……., (hereinafter referred to as the Bank), having registered/Head office at ……. and inter alia a branch at …… being the Guarantor under this Guarantee, hereby, irrevocably and unconditionally undertake to forthwith and immediately pay to the Employer any sum or sums upto a maximum amount of Rs ---------- [6] (Rupees ----------) without any demur, immediately on first demand from the Employer and without any reservation, protest, and recourse and without the Employer needing to prove or demonstrate reasons for its such demand.

Any such demand made on the Bank shall be conclusive as regards the amount due and payable by the Bank under this guarantee. However, our liability under this guarantee shall be restricted to an amount not exceeding Rs. _____.

We undertake to pay to the Employer any money so demanded notwithstanding any dispute or disputes raised by the Vendor / Contractor / Supplier in any suit or proceeding pending before any Court or Tribunal, Arbitrator or any other authority, our liability under this present being absolute and unequivocal.

The payment so made by us under this Guarantee shall be a valid discharge of our liability for payment thereunder and the Vendor / Contractor / Supplier shall have no claim against us for making such payment.

We the ……bank further agree that the guarantee herein contained shall remain in full force and effect during the period that would be taken for the performance of the said Contract/satisfactory completion of the performance guarantee period as per the terms of the Contract and that it shall continue to be enforceable till

all the dues of the Employer under or by virtue of the said Contract have been fully paid and its claims satisfied or discharged.

We ……..BANK further agree with the Employer that the Employer shall have the fullest liberty without our consent and without affecting in any manner our obligations hereunder to vary any of the terms and conditions of the said Contract or to extend time of performance by the said Vendor / Contractor / Supplier from time to time or to postpone for any time or from time to time any of the powers exercisable by the Employer against the said Vendor / Contractor / Supplier and to forbear or enforce any of the terms and conditions relating to the said Contract and we shall not be relieved from our liability by reason of any such variation, or extension being granted to the said Vendor / Contractor / Supplier or for any forbearance, act or omission on the part of the Employer or any indulgence by the Employer to the said Vendor / Contractor / Supplier or by any such matter or thing whatsoever which under the law relating to sureties would but for this provision have effect of so relieving us.

The Bank also agrees that the Employer at its option shall be entitled to enforce this Guarantee against the Bank as a principal debtor, in the first instance without proceeding against the Vendor / Contractor / Supplier and notwithstanding any security or other guarantee that the Employer may have in relation to the Vendor / Contractor / Supplier 's liabilities.

This Guarantee shall remain in force upto and including…….. [7] and shall be extended from time to time for such period as may be desired by Employer.

This Guarantee shall not be determined or affected by liquidation or winding up, dissolution or change of constitution or insolvency of the Vendor / Contractor / Supplier but shall in all respects and for all purposes be binding and operative until payment of all money payable to the Employer in terms thereof.

Unless a demand or claim under this guarantee is made on us in writing on or before the …….[8]we shall be discharged from all liabilities under this guarantee thereafter.

We, …… BANK lastly undertake not to revoke this guarantee during its currency except with the previous consent of the Employer in writing.

Notwithstanding anything to the contrary contained hereinabove:

a) The liability of the Bank under this Guarantee shall not exceed…… [6]
b) This Guarantee shall be valid up to ……[7]
c) Unless the Bank is served a written claim or demand on or before _____[8] all rights under this guarantee shall be forfeited and the Bank shall be relieved and discharged from all liabilities under this guarantee irrespective of whether or not the original bank guarantee is returned to the Bank.

We, _____ Bank, have power to issue this Guarantee under law and the undersigned as a duly authorized person has full powers to sign this Guarantee on behalf of the Bank.

For and on behalf of
(Name of the Bank)

Dated……
Place of Issue…….

[1] NAME AND ADDRESS OF EMPLOYER I.e Bharat Heavy Electricals Limited

[2] NAME AND ADDRESS OF THE VENDOR /CONTRACTOR / SUPPLIER.

[3] DETAILS ABOUT THE NOTICE OF AWARD/CONTRACT REFERENCE

[4] CONTRACT VALUE

[5] PROJECT/SUPPLY DETAILS
[6] BG AMOUNT IN FIGURES AND WORDS

[7] VALIDITY DATE

[8] DATE OF EXPIRY OF CLAIM PERIOD

Note:

1. Units are advised that expiry of claim period may be kept 3-6 months after validity date. It may be ensured that the same is in line with the agreement/ contract entered with the Vendor.

2. The BG should be on Non-Judicial Stamp paper/e-stamp paper of appropriate value as per Stamp Act prevailing in the State(s) where the BG is submitted or is to be acted upon or the rate prevailing in the State where the BG was executed, whichever is higher. The Stamp Paper/e-stamp paper shall be purchased in the name of Vendor/Contractor/Supplier /Bank issuing the guarantee.

3. In line with the GCC, SCC or contractual terms, Unit may carry out minor modifications in the Standard BG Formats. If required, such modifications may be carried out after taking up appropriately with the Unit/Region's Law Deptt.

4. In Case of Bank Guarantees submitted by Foreign Vendors-

   a. From Nationalized/Public Sector / Private Sector/ Foreign Banks (BG issued by Branches in India) can be accepted subject to the condition that the Bank Guarantee should be enforceable in the town/city or at nearest branch where the Unit is located i.e. Demand can be presented at the Branch located in the town/city or at nearest branch where the Unit is located.

   b. From Foreign Banks (wherein Foreign Vendors intend to provide BG from local branch of the Vendor country's Bank)

      b.1 In such cases, in the Tender Enquiry/ Contract itself, it may be clearly specified that Bank Guarantee issued by any of the Consortium Banks only will be accepted by BHEL. As such, Foreign Vendor needs to make necessary arrangements for issuance of Counter- Guarantee by Foreign Bank in favour of the Indian Bank's (BHEL's Consortium Bank) branch in India. It is advisable that all charges for issuance of Bank Guarantee/ counter- Guarantee should be borne by the Foreign Vendor. The tender stipulation should clearly specify these requirements.

      b.2 In case, Foreign Vendors intend to provide BG from Overseas Branch of our Consortium Bank (e.g. if a BG is to be issued by SBI Frankfurt), the same is acceptable. However, the procedure at sl.no. b.1 will required to be followed.

      b.3 The BG issued may preferably be subject to Uniform Rules for Demand Guarantees (URDG) 758 (as amended from time to time). The BG Format provided to them should clearly specify the same.

Annexure-VIII

F. No. DPE/3(3)/10-Fin.
Government of India
Ministry of Finance
Department of Public Enterprises

Block No. 14, CGO Complex,
Lodi Road, New Delhi-110003
Dated the 29th May, 2023

To,

Chief Executives of all CPSEs

Subject:- Concurrent application of Public Procurement Policy for Micro and Small Enterprises Order, 2012 and Public Procurement (Preference to Make in India) Order, 2017 - regarding

Sir/Madam,

The undersigned is directed to forward herewith a copy of Department of Expenditure O.M. dated 18th May, 2023 on the subject mentioned above for information and strict compliance.

Encl : As stated

29/5/2023

(Kailash Bhandari)
Deputy Director
Tel : 2436-6247

Copy to :- Shri Kanwalpreet, Director, Department of Expenditure, Room No. 264-C, North Block, New Delhi.

No.F.1/4/2021-PPD
Government of India
Ministry of Finance
Department of Expenditure
Public Procurement Division
*****

264-C, North Block, New Delhi.
18.05.2023.

OFFICE MEMORANDUM

Subject: Concurrent application of Public Procurement Policy for Micro and Small Enterprises Order, 2012 and Public Procurement (Preference to Make in India) Order, 2017.

The undersigned is directed to refer two Preferential Procurement Orders mandated for the Public Procurement in India, namely:

i. Public Procurement Policy for Micro and Small Enterprises (MSEs) Order dated 23.03.2012 (PPP-MSE Order) issued by Ministry of Micro, Small and Medium Enterprises (MoMSME) in exercise of the powers conferred in Section 11 of the MSME Development Act, 2006. (Last revised on 09.11.2018)

ii. Public Procurement (Preference to Make in India) Order, 2017 (PPP-MII order), under Rule 153(iii) of the General Financial Rules (GFRs) 2017, approved by the Cabinet. Implementation of this PPP-MII order is monitored by Department for Promotion of Industry and Internal Trade (DPIIT). (Last revised on 16.09.2020.)

2. It has been brought to the notice of this Department that concurrent application of these two orders are creating confusion to the procuring entities and different procuring entities interpret them differently. In order to bring predictability both to the procuring entities as well as bidders, following guidelines are being issued.

Guidelines

3. The Class-I local suppliers, under PPP-MII Order, participating in any government tender, may or may not be MSEs, as defined under the MSME Act. Similarly, MSEs participating in any government tender, may or may not be Class-I local suppliers. Suppliers may be categorised in following four broad categories for consideration or applicability of purchase preference:

Category	Terminology
Supplier is both MSE & Class-I local supplier.	"MSE Class-I local supplier"
Supplier is MSE but not Class-I local supplier.	"MSE but non-Class-I local supplier"
Supplier is not MSE but is Class-I local supplier.	"Non-MSE but Class-I local supplier"
Supplier is neither MSE nor Class-I local.	"Non-MSE non-Class-I local supplier"

4. The applicability of PPP-MSE Order and PPP-MII Order in various scenarios, involving simultaneous purchase preference to MSEs and Class-I local suppliers under PPP-MSE Order and PPP-MII Order respectively, shall be as under:

a) *Items covered under Para 3(a) of PPP- MII Order, 2017 for which Nodal Ministry has notified sufficient local capacity and competition:* For these items, only Class-I local suppliers are eligible to bid irrespective of purchase value. Hence, Class-II local suppliers or Non-local suppliers, including MSEs which are Class-II local suppliers/ Non-local suppliers, are not eligible to bid. Possible scenarios can be as under:

   (i) L-1 is "MSE Class-I local supplier" - 100% of the tendered quantity is to be awarded to L-1.

   (ii) L-1 is "Non-MSE but Class-I local supplier" - Purchase preference is given to MSEs as per PPP-MSE Order. Balance quantity is to be awarded to the L-1 bidder.

b) *Items reserved exclusively for procurement from MSEs as per PPP-MSE Order:* These items are reserved exclusively for purchase from MSEs. Hence, non-MSEs are not eligible to bid for these items. Possible scenarios can be as under:

   (i) L-1 is "MSE Class-I local supplier" - 100% of the tendered quantity is to be awarded to L-1.

   (ii) L-1 is "MSE non-Class–I local supplier" - Purchase preference is to be given to Class-I local supplier as per PPP-MII Order. Balance quantity, is to be awarded to L-1 bidder.

c) *If items are neither notified for sufficient local capacity nor reserved for MSEs, then the process will be as follows:*

   c (a) Items covered under Para 3A(b) of PPP-MII Order are divisible items and both MSEs as well as Class-I local suppliers are eligible for purchase preference. Possible scenarios can be as under:

      (i) L-1 is "MSE Class-I local supplier" - 100% of the tendered quantity is to be awarded to L-1.

      (ii) L-1 is "Non-MSE but Class-I local supplier" - Purchase preference is to be given to MSEs, if eligible, as per PPP-MSE Order. Balance quantity is to be awarded to L-1 bidder.

      (iii) L-1 is "MSE but non-Class-I local supplier" - Purchase preference is to be given to Class-I local suppliers, if eligible, as per PPP-MII Order. Balance quantity is to be awarded to L-1 bidder.

      (iv) L-1 is "Non-MSE non-Class-I local supplier" - Purchase preference is to be given to MSEs as per PPP-MSE Order. Thereafter, purchase preference is to be given to Class-I local suppliers for "50% of the tendered quantity minus quantity allotted to MSEs

above" as per PPP- MII Order. For the balance quantity, contract is to be awarded to L-1 bidder. *(Kindly refer to the illustrative example in the annexure).*

c (b) Items covered under Para 3A(c) of PPP-MII Order, 2017 are non-divisible items and both MSEs as well as Class-I local suppliers are eligible for purchase preference. Possible scenarios can be as under:

(i) L-1 is "MSE Class-I local supplier" - Contract is awarded to L-1.

(ii) L-1 is not "MSE Class-I local supplier" but the "MSE Class-I local supplier" falls within 15% margin of purchase preference - Purchase preference is to be given to lowest quoting "MSE Class-I local supplier". If lowest quoting "MSE Class-I local supplier" does not accept the L-1 rates, the next higher "MSE Class-I local supplier" falling within 15% margin of purchase preference is to be given purchase preference and so on.

(iii) If conditions mentioned in sub paras (i) and (ii) above are not met i.e. L-1 is neither "MSE Class-I local supplier" nor "MSE Class-I local supplier" is eligible to take benefit of purchase preference, the contract is to be awarded/ purchase preference to be given in different possible scenarios as under:

A. L1 is "MSE but non-Class-I local supplier" or "Non-MSE but Class-I local supplier" – Contract is be awarded to L1.

B. L1 is "Non-MSE non-Class-I local supplier" - First purchase preference to be given to MSE as per PPP-MSE Order. If MSE not eligible/ does not accept - purchase preference to be given to Class- I Local supplier as per PPP-MII Order. If Class-I Local supplier also not eligible/ does not accept – contract to be awarded to L-1.

d) *Items reserved for both MSEs and Class-I local suppliers*: These items are reserved exclusively for purchase from MSEs as well as Class-I local suppliers. Hence, only "MSE Class-I local supplier" are eligible to bid for these items. Non-MSEs/Class-II local suppliers/ Non-local suppliers cannot bid for these items. Hence the question of purchase preference does not arise.

e) Non-local suppliers, including MSEs falling in the category of Non-local suppliers, shall be eligible to bid only against Global Tender Enquiry.

18/5/2023

(Kanwalpreet)
Director
Tel.:-223093811; email: - kanwal.irss@gov.in

To

1. Secretaries of all Central Government Ministries/ Departments.
2. Secretary Department of Public Enterprises with a request for issuing suitable instructions to all Central Public Sector Enterprises in this regard.

Annexure

Example explaining applicability in scenario explained in para 4 c (a)(iv)

(Scenario: Divisible items, both MSEs as well as Class-I local suppliers eligible for purchase preference and L-1 is "Non-MSE non-Class-I local supplier")

Item – Desktop computer

Qty – 50 Nos.

Details of bids received

Sr. No.	Name of bidder	Rates quoted	Price Ranking	Status of bidder
1.	A	100	L1	"Non-MSE non- Class-I local supplier"
2.	B	110	L2	"Non-MSE but Class-I local supplier"
3.	C	112	L3	"MSE but non- Class-I local supplier"
4.	D	115	L4	"Non-MSE but Class-I local supplier"
5.	E	118	L5	"MSE but non- Class-I local supplier"
6.	F	120	L6	"MSE Class-I local supplier"

1. In this case, first purchase preference is to be given to MSEs as per PPP-MSE Order for 25% of tendered quantity of 50 Nos. i.e. 12.5 Nos. (rounded off to the next whole number say 13 Nos). Accordingly, invite L3 (bidder C), whose quoted rates falls within 15% margin of purchase preference to match L1 price i.e. Rs. 100/- for quantity of 13 Nos. Bidder "E" and "F", although MSEs, will not get purchase preference since their quoted rates don't fall within 15% margin of purchase preference. Bidder C will be considered for order of 13 Nos. on confirmation of reduction of price.

2. For 50% of balance quantity of 37 number (tendered quantity of 50 – 13 awarded to bidder C; assuming bidder C has confirmed to accept L1 rates), purchase preference will be given to lowest Class-I local supplier as per PPP-MII Order. Accordingly, bidder B will be invited to match L-1 price for 50% of 37 Nos i.e. 18.5 (say 19 Nos of computers). If bidder "B" does not accept the L1 price i.e. price of Rs. 100/- per unit, next higher Class-I local supplier falling within 20% margin of purchase preference, i.e. bidder "D", may be invited to match L-1 price for 19 Nos. of computers and so on.

3. For remaining quantity i.e. 18 Nos (50-13-19), the contract will be awarded to lowest quoting bidder i.e. Bidder "A", who is L-1 in the example.

***

Annexure-X

Restrictions under Rule 144(xi) of General Financial Rules, 2017 amendment dt: 23.07.2020

I. Any bidder from a country which shares a land border with India will be eligible to bid in this tender only if the bidder is registered with the Competent Authority.

II. "Bidder" (including the term 'tenderer', 'consultant' or 'service provider' in certain contexts) means any person or firm or company, including any member of a consortium or joint venture (that is an association of several persons, or firms or companies), every artificial juridical person not falling in any of the descriptions of bidders stated hereinbefore, including any agency branch or office controlled by such person, participating in a procurement process.

III. "Bidder from a country which shares a land border with India" for the purpose of this Order means :-

a. An entity incorporated, established or registered in such a country; or
b. A subsidiary of an entity incorporated, established or registered in such a country; or
c. An entity substantially controlled through entities incorporated, established or registered in such a country; or
d. An entity whose *beneficial owner* is situated in such a country; or
e. An Indian (or other) agent of such an entity; or
f. A natural person who is a citizen of such a country; or
g. A consortium or joint venture where any member of the consortium or joint venture falls under any of the above

IV. The *beneficial owner* for the purpose of (iii) above will be as under:

1. In case of a company or Limited Liability Partnership, the beneficial owner is the natural person(s), who, whether acting alone or together, or through one or more juridical person, has a controlling ownership interest or who exercises control through other means.

Explanation--

a. "Controlling ownership interest" means ownership of or entitlement to more than twenty-five per cent of shares or capital or profits of the company;

b. "Control" shall include the right to appoint majority of the directors or to control the management or policy decisions including by virtue of their shareholding or management rights or shareholders agreements or voting agreements;

2. In case of a partnership firm, the beneficial owner is the natural person(s) who, whether acting alone or together, or through one or more juridical person, has ownership of entitlement to more than fifteen percent of capital or profits of the partnership;

3. In case of an unincorporated association or body of individuals, the beneficial owner is the natural person(s), who, whether acting alone or together, or through one or more juridical person, has ownership of or entitlement to more than fifteen percent of the property or capital or profits of such association or body of individuals;

4. Where no natural person is identified under (1) or (2) or (3) above, the beneficial owner is the relevant natural person who holds the position of senior managing official;

5. In case of a trust, the identification of beneficial owner(s) shall include identification of the author of the trust, the trustee, the beneficiaries with fifteen percent or more interest in the trust and any other natural person exercising ultimate effective control over the trust through a chain of control or ownership.

V. An Agent is a person employed to do any act for another, or to represent another in dealings with third person.

ಭಾರತ್ ಹೆವಿ ಎಲೆಕ್ಟ್ರಿಕಲ್ಸ್ ಲಿಮಿಟೆಡ್
भारत हेवी इलेक्ट्रिकल्स लिमिटेड
Bharat Heavy Electricals Ltd.,
(A Government of India undertaking)
Electronics Division
PB 2606 , Mysore Road Bengaluru , 560026 INDIA

CE: PR: 002- Rev 04

GENERAL COMMERCIAL CONDITIONS FOR CONTRACT

These 'General Commercial Conditions for Contract for Purchase' herein after referred to as GCC apply to all enquiries, tenders, requests for quotations, orders, contracts and agreements concerning the supply of goods and the rendering of related services (hereinafter referred to as "deliveries") to Bharat Heavy Electricals Limited and any of its units, regions or divisions (hereinafter referred to as "BHEL" or the Purchaser) or its projects/ customers.

Any deviations from or additions to these GCC require BHEL's express written consent. The general terms of business or sale of the vendor shall not apply to BHEL. Acceptance, receipt of shipments or services or effecting payment shall not mean that the general terms of business or sale of the vendor have been accepted.

Orders, agreements and amendments thereto shall be binding if made or confirmed by BHEL in writing. Only the Purchasing department of BHEL is authorized to issue the Purchase Order or any amendment thereof.

Definitions: Throughout these conditions and in the specifications, the following terms shall have the meanings assigned to them, unless the subject matter or the context requires otherwise.

a) 'The Purchaser' means Bharat Heavy Electricals Limited, Electronics division, Mysore road, Bengaluru 560 026, a Unit of Bharat Heavy Electricals Limited (A Govt. of India Undertaking) incorporated under the Companies Act having its registered office at BHEL House, Siri Fort, New Delhi-110049, India and shall be deemed to include its successors and assigns. It may also be referred to as BHEL.
b) 'The vendor' means the person, firm, company or organization on whom the Purchase Order is placed and shall be deemed to include the vendor's successors, representative heirs, executors and administrator as the case may be. It may also be referred to as Seller, Contractor or Supplier.
c) 'Contract' shall mean and include the Purchase Order incorporating various agreements, viz. tender/ RFQ, offer, letter of intent/acceptance/ award, the General Conditions of Contract and Special Conditions of Contract for Purchase, Specifications, Inspection/ Quality Plan, Schedule of Prices and Quantities, Drawings, if any enclosed or to be provided by BHEL or his authorized nominee and the samples or patterns if any to be provided under the provisions of the contract.
d) 'Parties to the Contract' shall mean the 'The Vendor' and the Purchaser as named in the main body of the Purchase Order.

Order of Precedence:

In case of any inconsistency or contradiction between any of the documents, the order of precedence shall be Purchase Order, LOI / LOA, Special Conditions of Contract and General Conditions of Contract for commercial conditions; and specific agreement on technical conditions, RFQ/offer and specification for Technical Conditions.

Interpretation:

In the contract, except where the context requires otherwise:

a) words indicating one gender include all genders;
b) words indicating the singular also include the plural and words indicating the plural also include the singular;

File No. EDN-CEMM0HOD(ADMN)/6/2024-EDN-CE-MM (Computer No. 41389)
Generated from eOffice by J P Masand, Addl_GM(JPM)-CE-MM-EDN, Addl_GM, BHARAT HEAVY ELECTRICAL LTD on 17/05/2025 08:25 am

c) provisions including the word "agree", "agreed" or "agreement" require the agreement to be recorded in writing, and
d) "Written" or "in writing" means hand-written, type-written, printed or electronically made, and resulting in a permanent record.

Applicable Conditions:

1. Price Basis: All prices shall be firm until the purchase order is executed / completed in all respects. No price variations / escalation shall be permitted. For any delay at BHEL end towards issuing clearance for supply of spares for reasons attributable to BHEL/Customer, Contractor shall honor the PO prices for additional 01 year period from the date of expiry of contractual schedule and delivery schedule will be extended for such period of delay at BHEL end.

2. Ordering and confirmation of Order: Vendor shall send the order acceptance on their company letter head/ through e-mail within a week from the date of receipt of Purchase Order or such other period as specified/ agreed by BHEL. BHEL reserves the right to revoke the order placed if the order confirmation differs from the original order placed. The acceptance of goods/services/supplies by BHEL as well as payments made in this regard shall not imply acceptance of any deviations.
The purchase order will be deemed to have been accepted if no communication to the contrary is received within one week (or the time limit as specified/agreed by BHEL) from the date of receipt of the purchase order.

3. Documentation: After receipt of Purchase Order, vendor should submit necessary documents (if & as applicable) like drawings specified, bill of materials, datasheets, catalogues, quality plan, test procedure, type test report , O & M Manuals and/or any other relevant documents as per Specification/Purchase Order, as and when required by BHEL/Customer.
At any stage within the contract period, the vendor shall notify of any error, fault or other defect found in BHEL's documents /specifications or any other items for reference. If and to the extent that (taking account of cost and time) any vendor exercising due care would have discovered the error, fault or other defect when examining the documents/specifications before submitting the tender, the time for completion shall not be extended. However if errors, omissions, ambiguities, inconsistencies, inadequacies or other defects are found in the vendor's documents, they shall be corrected at his cost, notwithstanding any consent or approval.

4. Penalty:
   a. Submission of Engineering documents as per PO: After award of contract, Successful bidder shall submit complete set of documents (like drawings, bill of materials, datasheets, catalogues, quality plan, etc. as called in tender specification) for approval, within 14/21 days (as specified in SCC/Purchase Order) from the date of award of contract. Buyer shall issue manufacturing clearance along with approved documents within 60/75 days (as specified in SCC/Purchase Order) after receipt of documents from seller. Any delay by buyer/consignee in providing approved documents beyond specified period shall be on the part of buyer and BHEL will extend the delivery period for such period of delay.
   In case of any corrections in documents to be incorporated by seller for approval of document based on end-user/consultant/buyer comments, revised documents have to be submitted by seller incorporating the comments within 07/14 days (as specified in SCC) from the date of receipt of the same.
   Seller shall be required to commence manufacturing only after receipt of approved documents from BHEL.

   b. Liquidated Damages (LD): Delivery will commence from the date of placement of Purchase Order. If the seller fails to deliver any or all of the Goods within the original/re-fixed delivery period(s) specified in the contract, the Buyer will be entitled to deduct/recover the Liquidated damages for the delay @ 0.5% of the contract value of delayed quantity per week or part of the week of delayed period as pre-estimated damages not exceeding 10% of the contract value of the delayed quantity without any controversy/dispute of any sort whatsoever. GST as applicable will be recovered along with LD amount.

Extension of Delivery Period: Buyer may, on request of the Seller or otherwise, extend the delivery date subject to Force Majeure conditions and/or also on the ground/reasons of delay attributable to the Buyer / Consignee.

5. Contract variations (Increase or decrease in the scope of supply): BHEL may vary the contracted scope as per requirements at site. If vendor is of the opinion that the variation has an effect on the agreed price or delivery period, BHEL shall be informed of this immediately in writing along with technical details. Where unit rates are available in the Contract, the same shall be the basis for such additional work. Vendor shall not perform additional work before BHEL has issued written instructions/ amendment to the Purchase Order to that effect. The work which the vendor should have or could have anticipated in terms of delivering the service(s) and functionality (i.e.) as described in this agreement, or which is considered to be the result of an attributable error on the vendor's part, shall not be considered additional work.

6. a. Pre-dispatch inspection at seller premises: Before dispatch, the goods will be inspected by Buyer/ Consignee or their Authorized Representative or by Nominated External Inspection Agency (independently or jointly with Buyer or Consignee as decided by the Buyer) at the seller premises (or at designated place for inspection as declared / communicated by the seller) for their compliance to the contract specification. For in-house testing, the sellers will provide necessary facilities free of cost. Seller shall notify the Buyer through e-mail about readiness of goods for pre-dispatch inspection and Buyer shall notify the Seller about the Authorized Representative / Nominated External Inspection Agency and the date of testing. Scope of inspection is limited to 'approved quality plan or QA checklist or Purchase Specification'.
While bidding the sellers should take into account 12 days (unless otherwise specified in SCC) for arranging inspection from the date of email offering the goods for inspection. Any delay in arranging inspection beyond the specified period due to reasons not attributable to seller, shall be on the part of buyer and BHEL will extend the delivery period for such period of delay.

   b. Material Dispatch Clearance Certificate (MDCC): Seller should take into account 10 days (unless otherwise specified in SCC) for issuance of dispatch clearance by BHEL from the date of successful inspection report. Any delay in issue of MDCC beyond the specified period shall be on the part of buyer and BHEL will extend the delivery period of such period of delay.

   BHEL reserves the right for conducting repeat test, if required. All costs related to inspections & re-inspections shall be borne by vendor. Whether the Contract provides for tests on the premises of the vendor or any of his Sub-contractor/s, vendor shall be responsible to provide such assistance, labour, materials, electricity, fuels, stores, apparatus, instruments as may be required and as may be reasonably demanded to carry out such tests efficiently. Cost of any type test or such other special tests shall be borne by BHEL only if specifically agreed to in the purchase order.

7. Transit Insurance: Transit insurance coverage between vendor's works and project site shall be to the account of BHEL, unless specifically agreed otherwise. However, vendor shall send intimation directly to insurance agency (as mentioned in dispatch instructions issued by BHEL) through fax/courier/e-mail, immediately on dispatch of goods for covering insurance. A copy of such intimation sent by vendor to insurance agency shall be given to BHEL along with dispatch documents. Dispatch documents will be treated as incomplete without such intimation copy. BHEL shall not be responsible for sending intimations to insurance agency on behalf of the vendor.

8. Mode of dispatch:
   Indigenous Scope: By road on Door Delivery Consignee Copy attached basis through your approved transporter (unless otherwise indicated in Dispatch Instructions), only on receipt of Despatch Clearance from BHEL.
   Imported Scope: By Air/Sea through BHEL approved Freight Forwarder/supplier approved Consolidator respectively as per agreed contractual terms, only on receipt of Dispatch Clearance from BHEL.

9. Changes in Statutory levies:
   If any rates of Tax are increased or decreased, a new Tax is introduced, an existing Tax is abolished, or any change in interpretation or application of any Tax occurs in the course of the execution of Contract, which was or will be assessed on the bidder in connection with performance of the Contract, an equitable

adjustment of the Contract Price shall be made to fully take into account any such change by addition to the Contract Price or deduction there from, as the case may be. However, these adjustments would be restricted to direct transactions between BHEL and the bidder /agent of foreign bidder (if applicable). These adjustments shall not be applicable on procurement of raw materials, intermediary components etc. by the bidder /agent.

10. Avaiing duty/tax exemption benefits by bidder, wherever applicable: BHEL shall issue the required Certificate/s, as per relevant policies of the Govt. of India, to facilitate the bidders to avail any such benefits under the Contract. In case of failure of the bidders to receive the benefits partly or fully from the Govt. of India and/or in case of any delay in receipt of such benefits, BHEL shall neither be liable nor responsible in any manner whatsoever.

11. Taxes against sub-vendor dispatches: All taxes/levies, as applicable in respect of all components, equipments and material to be despatched directly from the sub-vendor's works to Site irrespective of the fact whether such taxes and levies are assessable and chargeable on Vendor or the BHEL, shall be to the vendor's account and no separate claim in this regard will be entertained by BHEL.

12. High Sea Sales (HSS): Customs clearance of the consignment landed on Indian Sea/Air ports will be done by BHEL based on the original HSS documents provided by vendors.
    Any delay in submission of complete/correct HSS documents to BHEL may incur demurrage charges. All demurrage charges on account of incomplete /incorrect HSS documents submission by vendor will be to vendor's account and all such charges will be recovered from any of the available vendor bills with BHEL.

13. Packaging and dispatch:The Seller shall package the goods safely and carefully and pack them suitably in all respects considering the peculiarity of the material for normal safe transport by Sea/ Air / Rail/ Road to its destination suitably protected against loss, damage, corrosion in transit and the effect of tropical salt laden atmosphere. The packages shall be provided with fixtures/ hooks and sling marks as may be required for easy and safe handling. If any consignment needs special handling instruction, the same shall be clearly marked with standard symbols / instructions. Hazardous material should be notified as such and their packing, transportation and other protection must conform to relevant regulations.
    The packing, shipping, storage and processing of the goods must comply with the prevailing legislation and regulations concerning safety, the environment and working conditions. Any Imported/Physical Exports items packed with raw/ solid wood packing material should be treated as per ISPM – 15 (fumigation) and accompanied by Phytosanitory/ Fumigation certificate. If safety information sheets (MSDS – Material Safety Data Sheet) exist for an item or the packaging, vendor must provide this information without fail along with the consignment.
    Each package must be marked with Consignee name, Purchase order number, Package number, Gross weight and net weight, dimensions (LxBxH) and Seller's name. Packing list of goods inside each package with PO item number and quantity must also be fixed securely outside the box to indicate the contents of each box. Total number of packages in the consignment must also be indicated in the packing list.
    Separate packing & identification of items should be as follows.
    1. Main Scope - All items must be tagged with part no. & item description.
    2. Commissioning accessories/spares - All items must be tagged with part no. & item description.
    3. Mandatory spares - All items must be tagged with part no. & item description.
    Nevertheless, vendor shall adhere to dispatch & packing instructions issued by BHEL at the time of dispatch.

14. Assignment of Rights & Obligations; Subcontracting: Vendor is not permitted to subcontract the delivery or any part thereof to third party or to assign the rights and obligations resulting from this agreement in whole or in part to third parties without prior written permission from BHEL. Any permission or approval given by the BHEL shall, however, not absolve the vendor of the responsibility of his obligations under the Contract.

15. Progress report: Vendor shall render such report as to the progress of work and in such form as may be called for by the concerned purchase officer from time to time. The submission and acceptance of such reports shall not prejudice the rights of BHEL in any manner.

16. Non-disclosure and Information Obligations: Vendor shall provide with all necessary information pertaining to the goods as it could be of importance to BHEL. Vendor shall not reveal any specified confidential information that may be divulged by BHEL to Vendor's employees not involved with the tender/ contract & its execution and delivery or to third parties, unless BHEL has agreed to this in writing beforehand. Vendor shall not be entitled to use the BHEL name in advertisements and other commercial publications without prior written permission from BHEL.

17. Cancellation /Termination of contract: BHEL shall have the right to completely or partially terminate the agreement by means of written notice to that effect. Termination of the Contract, for whatever reason, shall be without prejudice to the rights of the parties accrued under the Contract up to the time of termination. BHEL shall have the right to cancel/foreclose the Order/ Contract, wholly or in part, in case it is constrained to do so on account of any decline, diminution, curtailment or stoppage of the business.

18. Risk Purchase Clause: In case of failure of supplier, BHEL at its discretion may make purchase of the materials / services not supplied / rendered in time at the RISK & COST of the supplier. Under such situation, the supplier who fails to supply the goods in time shall be wholly liable to make good to BHEL any loss due to risk purchase.
    In case of items demanding services at site like erection and commissioning, vendor should send his servicemen/representatives within 7 days from the service call. In case a vendor fails to attend to the service call, BHEL at its discretion may also make arrangements to attend such service by other parties at the **RISK & COST** of the supplier. Under such situation the supplier who fails to attend the service shall be wholly liable to make good to BHEL any loss due to risk purchase/service including additional handling charges due to the change.

19. Shortages: In the event of shortage on receipt of goods and/or on opening of packages at site, all such shortages, caused by supplier's act or omission, shall be made good at the cost of seller within a reasonable time that BHEL may allow from such intimation.
    Transit Damages: In the event of receipt of goods in damaged condition or having found them so upon opening of packages at site, supplier shall make good of all such damages within a reasonable time from such intimation by BHEL. In case BHEL raises an insurance claim, the cost of material limited to insurance settled amount less handling charges will be reimbursed to supplier.

20. Remedial work: Notwithstanding any previous test or certification, BHEL may instruct the vendor to remove and replace materials/goods or remove and re-execute works/services which are not in accordance with the purchase order. Similarly, BHEL may ask the vendor to supply materials or to execute any services which are urgently required for any safety reasons, whether arising out of or because of an accident, unforeseeable event or otherwise. In such an event, Vendor shall provide such services within a reasonable time as specified by BHEL.

21. Indemnity Clause: Vendor shall comply with all applicable safety regulations and take care for the safety of all persons involved. Vendor is fully responsible for the safety of its personnel or that of his subcontractor's men / property, during execution of the Purchase Order and related services. All statutory payments including PF, ESI or other related charges have to be borne by the vendor. Vendor is fully responsible for ensuring that all legal compliances are followed in course of such employment. Vendor shall fully indemnify and keep indemnified BHEL against all claims of whatsoever nature arising during the course and out of execution of this Order/Contract.

22. Product Information, Drawings and Documents: All specified drawings, technical documents or other technical information received by Vendor from BHEL or vice versa shall not, without the consent of the other party, be used for any other purpose than that for which they were provided. They may not, without the consent of the Disclosing party, otherwise be used or copied, reproduced, transmitted or communicated to third parties. All information and data contained in general product documentation, whether in electronic or any other form, are binding only to the extent that they are by reference expressly included in the contract. Vendor, as per agreed date/s but not later than the date of delivery, provide free of charge information and drawings which are necessary to permit and enable BHEL to erect, commission, operate and maintain the product. Such information and drawings shall be supplied in as many numbers of copies as may be agreed upon.

All intellectual properties, including designs, drawings and product information etc. exchanged during the formation and execution of the Contract shall continue to be the property of the disclosing party.

23. Intellectual Property Rights, Licenses: If any Patent, design, Trade mark or any other intellectual property rights apply to the delivery (goods/related service) or accompanying documentation shall be the exclusive property of the Vendor and BHEL shall be entitled to the legal use thereof free of charge by means of a non-exclusive, worldwide, perpetual license. All intellectual property rights that arise during the execution of the Purchase Order/ contract for delivery by vendor and/or by its employees or third parties involved by the vendor for performance of the agreement shall belong to BHEL. Vendor shall perform everything necessary to obtain or establish the above mentioned rights. The Vendor guarantees that the delivery does not infringe on any of the intellectual property rights of third parties. The Vendor shall do everything necessary to obtain or establish the alternate acceptable arrangement pending resolution of any (alleged) claims by third parties. The Vendor shall indemnify BHEL against any (alleged) claims by third parties in this regard and shall reimburse BHEL for any damages suffered as a result thereof.

24. Force Majeure: If at any time during the continuance of the contract, the performance in whole or in part by either party of any obligation under this Contract shall be prevented or delayed by the reasons of any war, hostility, acts of the public enemy, epidemics, civil commotion, sabotage, fires, floods, explosion, quarantine restrictions, strikes, lockouts or act of God provided notice of happening of such event duly evidenced with documents is given by one party to the other within 10 days from the date of occurrence thereof, neither party shall be by reasons of such event, be entitled to terminate the contract not shall either party have any claim for damages against the other in respect of such non-performance after such event has come to an end or ceased to exist and the decision of the Buyer as to whether the deliveries have been so resumed or not, shall be final and conclusive.
    If force majeure applies, dates by which performance obligations are scheduled to be met will be extended for a period of time equal to the time lost due to any delay so caused.
    Notwithstanding above provisions, in an event of Force Majeure, BHEL reserves for itself the right to cancel the order/ contract, wholly or partly, in order to meet the overall project schedule and make alternative arrangements for completion of deliveries and other schedules.

25. Warranty:
    Wherever required, and so provided in the specifications/ Purchaser Order, the Seller shall ensure that the goods supplied shall comply with the specifications laid down, for materials, workmanship and performance.
    Unless otherwise specified in SCC, warranty period shall be applicable for a period of 24 months from the date of delivery of goods or 18 months from the date of commissioning of goods, whichever is earlier.
    The warranty period as described above shall apply afresh to replaced, repaired or re-executed parts of a delivery. Unless otherwise specifically provided in the Purchase Order, Vendor's liability shall be co terminus with the expiration of the applicable warranty period.

26. Limitation of Liability: Vendor's liability towards this contract is limited to a maximum of 100% of the contract value and consequential damages are excluded. However the limits of liability will have no effect in cases of criminal negligence or wilful misconduct.
    The total liability of Vendor for all claims arising out of or relating to the performance or breach of the Contract or use of any Products or Services or any order shall not exceed the total Contract price.

27. Liability during warranty: Vendor shall arrange replacement / repair of all the defective materials / services under its obligation during the warranty period. The rejected goods shall be taken away by vendor and replaced / repaired. In the event of the vendor's failure to comply, BHEL may take appropriate action including disposal of rejections and replenishment by any other sources at the cost and risk of the vendor.
    In case, defects attributable to vendor are detected during Warranty period or where the commissioning call is issued within the warranty period, vendor shall be responsible for replacement/ repair of the goods as required by BHEL at vendor's cost even after expiry of warranty period.
    Further if the equipment or any part thereof cannot be used by reason of such defect and/or making good of such defect, the warranty period of the equipment or such part, as the case may be, shall be extended by a period equal to the period during which the equipment or such part cannot be used by BHEL because of any of the aforesaid reasons. Upon correction of the defects in the facilities or any part thereof by

repair/replacement, such repair/replacement shall have the warranty period for a period of twelve (12) months from the time such replacement/repair of the equipment or any part thereof has been completed.

28. Liability after warranty period: At the end of the warranty, the Vendor's liability ceases except for latent defects. For the purpose of this clause, latent defects shall be the defects inherently lying within the material or arising out of design deficiency which do not manifest themselves during the warranty Period, but later. The Contractor's liability for latent defects warranty for the equipment including spares shall be limited to a period of six months from the end of the warranty period of the respective equipment including spares or first time commissioning, whichever is later but not later than one (01) year from the date of expiry of warranty period.

29. Compliance with Laws: Vendor shall, in performing the contract, comply with all applicable laws. The vendor shall make all remittances, give all notices, pay all taxes, duties and fees, and obtain all permits, licences and approvals, as required by the laws in relation to the execution and completion of the contract and for remedying of any defects; and the Contractor shall indemnify and hold BHEL harmless against and from the consequences of any failure to do so.

30. Settlement of Disputes:Except as otherwise specifically provided in the Purchase Order, decision of BHEL shall be binding on the vendor with respect to all questions relating to the interpretation or meaning of the terms and conditions and instructions herein before mentioned and as to the completion of supplies/work/services, other questions, claim, right, matter or things whatsoever in any way arising out of or relating to the contract, instructions, orders or these conditions or otherwise concerning the supply or the execution or failure to execute the order, whether arising during the schedule of supply/work or after the completion or abandonment thereof. Any disputes or differences among the parties shall to the extent possible be settled amicably between the parties thereto, failing which the disputed issues shall be settled through arbitration. Vendor shall continue to perform the contract, pending settlement of dispute(s).

31. Arbitration Clause in case of Contract with vendors other than Public Sector Enterprise (PSE) or a Government Department:

    Arbitration & Conciliation:

    The parties shall attempt to settle any disputes or difference arising out of the formation, breach, termination, validity or execution of the Contract; or, the respective rights and liabilities of the parties; or, in relation to interpretation of any provision of the Contract; or, in any manner touching upon the Contract, or in connection with this contract through friendly discussions. In case no amicable settlement can be reached between the parties through such discussions, in respect of any dispute; then, either Party may, by a notice in writing to the other Party refer such dispute or difference to the sole arbitration of an arbitrator appointed by Head of the BHEL–EDN. Such Sole Arbitrator appointed, shall conduct the arbitration in English language.
    The Arbitrator shall pass a reasoned award and the award of the Arbitration shall be final and binding upon the Parties.
    Subject as aforesaid, the provisions of Arbitration and Conciliation Act 1996 (India) or statutory modifications or re-enactments thereof and the rules made thereunder and for the time being in force shall apply to the arbitration proceedings under this clause. The seat of arbitration shall be Bengaluru.
    The cost of arbitration shall be borne as decided by the Arbitrator upon him entering the reference.
    Subject to the Arbitration Clause as above, the Courts at Bengaluru alone shall have exclusive jurisdiction over any matter arising out of or in connection with this Contract.
    Notwithstanding the existence or any dispute or differences and/or reference for the arbitration, the parties shall proceed with and continue without hindrance the performance of its obligations under this Contract with due diligence and efficiency in a professional manner except where the Contract has been terminated by either Party in terms of this Contract.

    Arbitration Clause in case of Contract with a Public Sector Enterprise (PSE) or a Government Department:
    In the event of any dispute or difference relating to the interpretation and application of the provisions of the Contract, such dispute or difference shall be referred by either party for Arbitration to the Sole

Arbitrator in the Department of Public Enterprises to be nominated by the Secretary to the Government of India in-charge of the Department of Public Enterprises. The Arbitration and Conciliation Act, 1996 shall not be applicable to arbitration under this clause. The award of the Arbitrator shall be binding upon the parties to the dispute, provided, however, any Party aggrieved by such Award may make further reference for setting aside or revision of the Award to the Law Secretary, Department of Legal Affairs, Ministry of Law and Justice, Government of India. Upon such reference the dispute shall be decided by the Law Secretary or the Special Secretary or Additional Secretary when so authorized by the Law Secretary, whose decision shall bind the Parties hereto finally and conclusively. The Parties to the dispute will share equally the cost of arbitration as intimated by the Arbitrator.'

32. Applicable Laws and Jurisdiction of Courts: Prevailing Indian laws both substantive and procedural, including modifications thereto, shall govern the Contract. Subject to the conditions as aforesaid, the competent courts in Bengaluru alone shall have jurisdiction to consider over any matters touching upon this contract.

33. General Terms: That any non-exercise, forbearance or omission of any of the powers conferred on BHEL and /or any of its authorities will not in any manner constitute waiver of the conditions hereto contained in these presents.
That the headings used in this agreement are for convenience of reference only.
That all notices etc., to be given under the Purchase order shall be in writing, type script or printed and if sent by registered post or by courier service to the address given in this document shall be deemed to have been served on the date when in the ordinary course, they would have been delivered to the addressee.

34. Clause reserved.

35. NO CLAIM FOR INTEREST OR DAMAGE:
    1) Interest on Money due to the Seller/Supplier/Vendor: Vendor shall not be entitled to any interest or damage in case of any delay on the part of the BHEL to pay the amount due upon measurement or as per Contract or otherwise. Vendor shall also not be entitled to interest upon any guarantee / security / retention money or payments in arrears or upon any balance which may on the final settlement of his account be due to him.
    2) No Claim for Interest or Damage: No claim for interest or damage will be entertained or be payable by BHEL in interest of any amount or balance which may be lying with BHEL or may become due upon settlement/adjudication of any dispute, difference or misunderstanding between the parties by way of arbitration or court proceedings or otherwise or in respect of any delay or omission on the part of the Employer in making intermediate or final payment or in respect of any amount / damage which may be claimed through arbitration or court proceedings or in any other respect whatsoever.

PQC FOR CONTROL DESK & FURNITURE

Sl. No.	PRE-QUALIFICATION CRITERIA	Vendor Compliance (Yes/No)
1	**Upload Manufacturer Authorization:** The bidder should be Original Equipment Manufacturer OEM or Authorized Partner (Distributor / Reseller / Dealer) of OEM; Wherever Authorized Partners are submitting the bid, Manufacturers Authorization Form (MAF) / Certificate with OEM details such as name, designation, address, e-mail Id & Phone No., duly signed and sealed by OEM is required to be furnished along with the bid. Customer approved suppliers for control desk are Pyrotech Workspace Solutions, Adarsha Control Systems & Cosmos Media Products. *Note : If bidder is quoting any make of desk other than above, clause-6 to be complied.*	
2	Bidders to provide compliance that same make/model (unit control desk with mosaic based console) quoted for this enquiry have been earlier supplied for Power Plant / Process Plant control rooms / any other control room applications. Vendor should submit relevant PO copies (with detailed BOM clearly indicating make/model supplied as part of PO) as proof of supply.	
3	**Experience Criteria** : The Bidder (OEM or its Authorized Partner (Distributor / Reseller / Dealer)) should have regularly manufactured, supplied & commissioned same or similar category products to any power plant or process industry for control room applications during preceding 5 financial years (i.e. current year and five previous financial years) as on opening of bid. Copies of relevant Invoices / commissioning MoMs / execution certificates by clients to be submitted along with bid in support of having supplied some quantity during each of the past 5 financial years. In case of bunch bids, the primary product having highest value should meet this criterion.	
4	**Performance Criteria :** The Bidder (OEM or its Authorized Partner (Distributor / Reseller / Dealer)), should have executed project for supply and installation / commissioning of same or similar Category Products in at least one financial year out of preceding 5 financial years (i.e. current year and five previous financial years) as on opening of bid, as per following criteria: (i) Single order of at least Rs. 25,00,000/- each; or (ii) Two orders of at least Rs. 15,00,000/- each; or (iii) Three orders of at least Rs. 10,00,000/- each Copies of relevant POs & Invoices to be submitted.	
5	Bidder's offer is liable to be rejected if they don't provide any of the certificates / documents sought in the Bid document, PQC and Corrigendum if any.	
6	Bidder to quote from the customer approved makes. If any other make is quoted, Bidder [illegible] customer. However, if the customer approval is not received within 30 days of submission, the offer shall be considered as rejected.	

Approved By

MALA SIBOO
AGM (CE-ENGG-CONTROL DESK)

BIRENDER NATH SHARMA
AGM (CE-ENGG-HMI-PR)

PQC FOR COMPUTER FURNITURE (PART-B)

Sl. No.	PRE-QUALIFICATION CRITERIA	Vendor Compliance (Yes/No)
1	**Upload Manufacturer Authorization:** The bidder should be Original Equipment Manufacturer OEM or Authorized Partner (Distributor / Reseller / Dealer) of OEM; Wherever Authorized Partners are submitting the bid, Manufacturers Authorization Form (MAF) / Certificate with OEM details such as name, designation, address, e-mail Id & Phone No., duly signed and sealed by OEM is required to be furnished along with the bid.	
3	**Experience Criteria:** The Bidder (OEM or its Authorized Partner (Distributor / Reseller / Dealer)) should have regularly manufactured, supplied & commissioned same or similar category products to any power plant or process industry for control room applications during preceding 5 financial years (i.e. current year and five previous financial years) as on opening of bid. Copies of relevant Invoices / commissioning MoMs / execution certificates by clients to be submitted along with bid in support of having supplied some quantity during each of the past 5 financial years. In case of bunch bids, the primary product having highest value should meet this criterion. Customer approved datasheet , drawing & Quality plan for these supplies shall be mandatorily submitted as part of experience supporting documents. Non-submission of any of above mentioned documents shall lead to PQC rejection .	
4	**Performance Criteria :** The Bidder (OEM or its Authorized Partner (Distributor / Reseller / Dealer)), should have executed project for supply and installation / commissioning of same or similar Category Products in at least one financial year out of preceding 5 financial years (i.e. current year and five previous financial years) as on opening of bid, as per following criteria: (i) Single order of at least Rs. 15,00,000/- each; or (ii) Two orders of at least Rs. 6,00,000/- each; or (iii) Three orders of at least Rs. 4,00,000/- each Copies of relevant POs & Invoices to be submitted.	
5	Bidder's offer is liable to be rejected if they don't provide any of the certificates / documents sought in the Bid document, PQC and Corrigendum if any.	
6	Bidder to quote from the customer approved makes. If any other make is quoted, Bidder has to provide credentials and performance reports to get approval from BHEL customer. However, if the customer approval is not received within 30 days of submission, the offer shall be considered as rejected.	

Approved By

B.N. Sharma

BIRENDER NATH SHARMA
AGM (CE-ENGG-HMI-PR)

	BOM FOR TALCHER CONTROL DESK AND FURNITURE															
		Material code	Unit 1	Unit 2	FOPH	AUX	SAC	CCR	WS	AHP	CHP	FGD	common	MUWP	SWGR	Total_qty
1	Unit Control Desk_8m (with drawout)	PR0500006634	1	1												2
2	Drawout Console for 8m Unit Control Desk-U1	PR0900007777	1	1												2
3	Control Desk_4m_without drawout console WS	PR0900006519							1							1
4	Control Desk_4m_without drawout console AHP	PR0900006500								1						1
5	CONTROL DESK FOR CHP 4m	PR0500003115									1					1
6	Draw out Console for 4m CHP Control Desk	PR0900007769									1					1
7	Control Desk_3m-Unit Incharge	PR0900006461	1													1
8	Control Desk_3m-FGD	PR0500005958										1				1
9	WS Furniture_2 sections	PR0900006485	4	4	1	1	1		1	1	1	1		1	1	17
10	WS Furniture_1 section	PR0900006478			1	1	1		1	1	1	1		1	1	9
11	PC rack	PR0900006453	5	5				8			2					20
12	Server rack	PR0900006445	8	8												16
13	Printer Rack	PR0900006437	2	2												4
14	Conference table	PR0900006429											1			1
15	Mandatory Spare	PR0900007750														1
16	computer Table	PR0490000134														11
17	Printer Table	PR0490000142														3
18	Keypad	PR0900005912														10
19	Almirah	PR0900005904														9
20	Locker	PR0900005920														**10**
21	Chair	PR0490000991														96

COPYRIGHT AND CONFIDENTIAL
The information contained in this document is the property of *BHARAT HEAVY ELECTRICALS LIMITED*
This must not be used directly or indirectly, in any manner detrimental to the interest of the company

PROJECT	:	**TALCHER THERMAL POWER PROJECT STAGE-III (2 X 660 MW)**
CUSTOMER	:	**M/s NTPC**
EQUIPMENTS	:	**OPERATOR DESK/UCD (8 m) WITH DRAWOUT CONSOLE**

COPYRIGHT AND CONFIDENTIAL
The information contained in this document is the property of *BHARAT HEAVY ELECTRICALS LIMITED*
This must not be used directly or indirectly, in any manner detrimental to the interest of the company

REVISION HISTORY SHEET

REV No.	DATE	NATURE OF CHANGE	REASON	PREPARED BY	CHECKED BY	REVIEWED BY
00	19.04.2017	FIRST ISSUE	---	AS	KP	KP
01	06.03.2023	SECOND ISSUE	SPEC MODIFIED FOR PATRATU PROJECT	SN	AS	BNS
02	21.10.2025	THIRD ISSUE	SPEC MODIFIED FOR TALCHER PROJECT	SN	AS	BNS

COPYRIGHT AND CONFIDENTIAL
The information contained in this document is the property of *BHARAT HEAVY ELECTRICALS LIMITED*
This must not be used directly or indirectly, in any manner detrimental to the interest of the company

OPERATOR DESK (UCD)

Modular CPU FREE operator desk as per BHEL drawing attached as DRAWING – I. Brief specifications for operator desk/UCD are given below:

Sl. No.	Specification	Supplier's Remark
1	Unit Control Desk (UCD) is required as per drawing enclosed (DRAWING-I). The UCD shall be furnished fully wired with necessary provision for convenience outlets, internal lighting, grounding, ventilation, space heating, anti-vibration pads, internal piping & accessories as required for completeness of the system.	
2	The UCD shall be free standing top type with with front & back cover constructed of **1.6** mm thick CRCA steel plates. The UCD should consist of vertical, horizontal and base support with their coverings for work surface, sliding keyboard trays, mouse pads, monitor shelf and concealed cable and wire way management, perforated trays with covers in both horizontal and vertical.	
3	The top surface of control desk shall be 30mm thick with the top 12mm of acrylic solid surface and remaining 18mm of laminated medium density fiber board. Work surface shall be made of two different colours at same level and seamlessly joined in each section. The structure frame shall consist of extruded aluminium top and bottom horizontal beams and vertical support tensioned together to form an integrated, finished curvilinear shaped frame. Vertical & Horizontal supports, minimum 2.5mm and 2mm thick respectively, have to be provided for the structure frame. Extreme side legs shall be illuminated type and should complete the overall form and aesthetics of the desk. It shall have concealed cable & wire way management system.	
4	Unit Control Desk (UCD) should be arc-shaped and width and depth to be as per Drawing enclosed (DRAWING-I).	
5	Profiled extended support and cantilevered beam of Aluminium / steel with suspension hook (if required) to support legs to be provided which should have powder coated finish in approved color / shade.	
6	Unit Control Desk (UCD) should be arc shape and PA system handsets, telephone sets, PB stations and lamps shall be mounted on the control desk on mosaic grid structure. The CPU of OWS etc. shall be located separately on PC racks. The cabling / wiring between OWS & CPU's, power supply cable shall be aesthetically routed and concealed from view.	
7	As required number of 4 way - 5/15 Amps power socket strip mounted on each section to power monitor, KVM switches etc.	
8	The Desk should have a draw out console on either end of desk sections. Detailed specification is available in **PART-B**	
9	The Desk should have synchroscope console mounted as per drawing enclosed. Detailed specification is available in **PART-B**	
10	The Desk can be designed, manufactured and supplied in separate shipping sections. Indicative drawings attached. The general layout of one section is shown in the drawing.	
11	Emergency Push Button – 4 nos., as indicated in drawing, with protective cover, wired up to TB, power ratting min. 2A each, other details like make etc. will be as mentioned in the draw out section of control desk	
12	The design of the desk should be modular such that it shall be possible to add / remove any section/s of the desk if required.	

NOTE:

1. Dimensions are indicative, detailed component size and specification may be vendor specific within broad specs given above.
2. As required Nos. of 4 ways, 5/15 Amps power socket strip mounted on each of the shelves.
3. ***3D rendering drawing for Main Control room is also required. Control room layout drawing is attached as* Drawing-II.**

COPYRIGHT AND CONFIDENTIAL
The information contained in this document is the property of *BHARAT HEAVY ELECTRICALS LIMITED*
This must not be used directly or indirectly, in any manner detrimental to the interest of the company

PART A1 – GENERAL SPECIFICATIONS

Sl. No.	Specification	Supplier's Remark
1	Finished surface to be free from waves, belies or other imperfections. Surface to be Powder Coated or if Spray painted, 2 coats of inhibitive epoxy primer surface to be applied. Paint with Minimum of 2 coats of Primer and 2 sprays of final finish color to be applied OR powder coated with epoxy paint. Exact color and shade of components will be specified at the time of Order placement. Minimum thickness for Aluminum Sheets: is 30 microns. For MS Components: is 65 microns	
2	Along with offer detailed drawings showing sectional view, top view, front view, and rear view of desks and tables, electrical wiring diagram with bill of materials for each item, and images and/or catalogue of computer chairs.	
3	Documents to be submitted for manufacturing approval: ▪ Detailed OGA with front view, top view, rear view, sectional view, and floor cut-out details for desks and tables. ▪ Electrical Wiring Diagram with BOM of HMI operator desk, draw-out consoles, synchroscope, and Two section desk. ▪ Quality Plan ▪ Color Shade options.	
4	Supplier internal Test certificate for dimensions, Visual inspection, paint, HV, IR, electrical functions to be submitted before giving inspection calls to BHEL.	
5	Inspection by BHEL / CUSTOMER at supplier's work.	
6	All items will be directly dispatched to project site from supplier works after obtaining necessary clearance from BHEL. Consignee details will be intimated at the time of placement of PO.	
7	All items shall be packed in complete weather proof packing with sufficient cushioning to avoid transit damage. Suitable pallet shall be provided for handling and transportation	
8	Name Plates with following details are to be provided for each shipping section. ▪ Item: **As per PO** ▪ Project Name / Unit no: **As per PO** ▪ Customer Name: **As per PO** ▪ BHEL Order No.: **As per PO** ▪ Date of dispatch to site: **As per PO**	
9	Assembly, erection and installation, including laying of power cables, keyboard, mouse and monitor extender cables, termination of the cables, at site to be carried out by supplier. Offer to include charges for same along with necessary touch up etc.	
10	Modifications as per site requirements to be done on free of cost to match with floor opening for cables. Site work for aligning and matching the curvature of desk as shown in enclosed drawing is under supplier scope.	
11	Warranty: Offer to include "Two years' warranty at site" for all items against manufacturing defects from date of supply. Warranty to include all costs towards material, labor, to & fro, traveling, accommodation and stay etc. Exact location of the project site will be intimated at the time of PO.	

Note: Supplier is required to submit the filled, signed and stamped copy of this specification along with the offer, failing which offer is liable for rejection.

Annexures:

DRAWING I – HMI Operator desk/UCD (8 m) drawing
DRAWING II – Control room layout drawing

COPYRIGHT AND CONFIDENTIAL
THE INFORMATION ON THIS DOCUMENT IS THE PROPERTY OF BHARAT HEAVY ELECTRICALS LTD. IT MUST NOT BE USED DIRECTLY OR INDIRECTLY IN ANY WAY DETRIMENTAL TO THE INTEREST OF THE COMPANY.

DRG. No. 3 659 44 05471

UNIT CONTROL DESK OF 8 SECTIONS

NOTES :

1) THE TOP SURFACE OF CONTROL DESK SHALL BE 30mm THICK WITH THE TOP 12mm OF ACRYLIC SOLID SURFACE AND THE REMAINING 18mm OF LAMINATED MEDIUM DENSITY .
2) COLOR OF TABLE TOP : AS PER APPROVAL.
3) VERTICAL & HORIZONTAL SUPPORTS, MINIMUM 2.5 & 2mm THICK RESPECTIVELY, HAVE TO BE PROVIDED FOR STRUCTURE FRAME.
4) THE STRUCTURE FRAME SHALL CONSIST OF EXTRUDED ALUMINIUM TOP & BOTTOM HORIZONTAL BEAMS & VERTICAL SUPPORT TENSIONED TOGETHER TO FORM AN INTEGRATED, FINISHED CURVILINER SHAPED FRAME.
5) FRONT & BACK COVERS : PERFORATED SHEET THICKNESS 1.6mm
6) ALL ALUMINUM EXTRUSIONS WILL BE POWDER COATED IN ALUMINUM GREY
7) EXTREME SIDE LEGS SHALL BE ILLUMINATED TYPE AND SHOULD COMPLETE THE OVERALL FORM AND AESTHETICS OF THE DESK
8) PAINT SHADE : AS PER APPROVAL
9) DIMENSIONS ARE INDICATIVE AND SUBJECT TO CHANGE BASED ON MODEL/SUPPLIER AVAILABILITY.

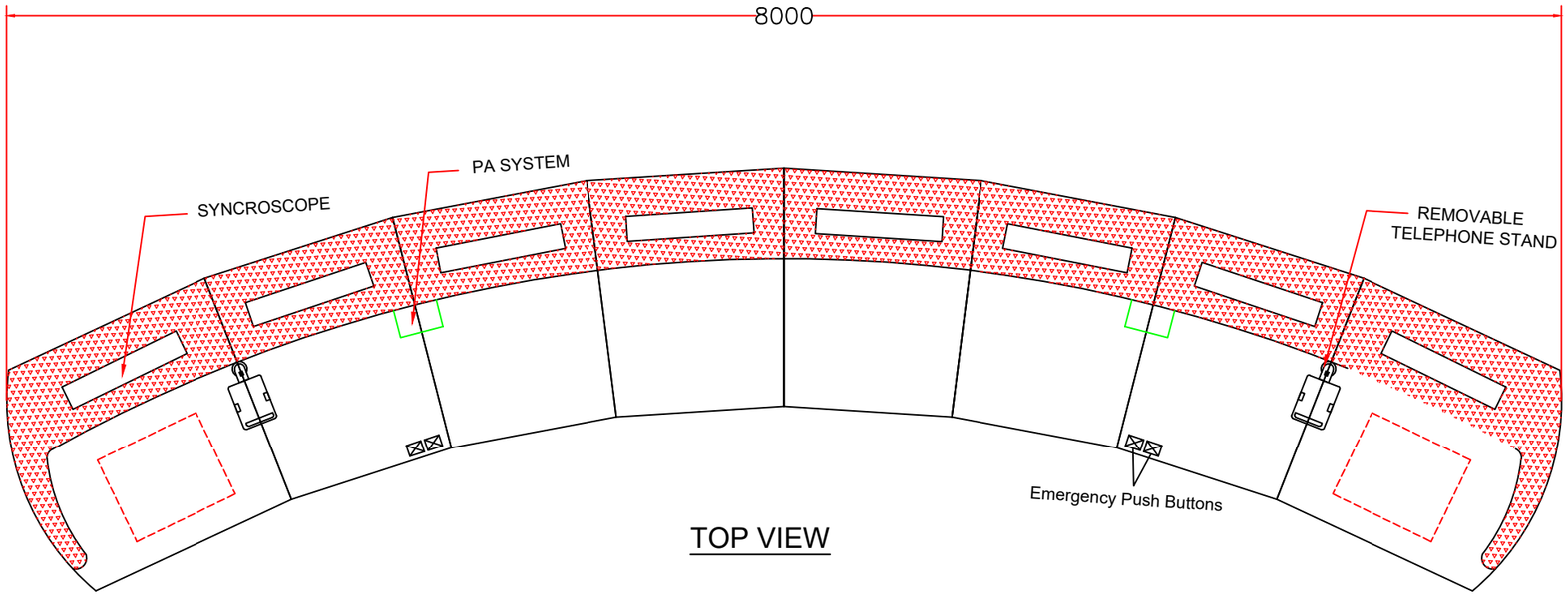

TOP VIEW

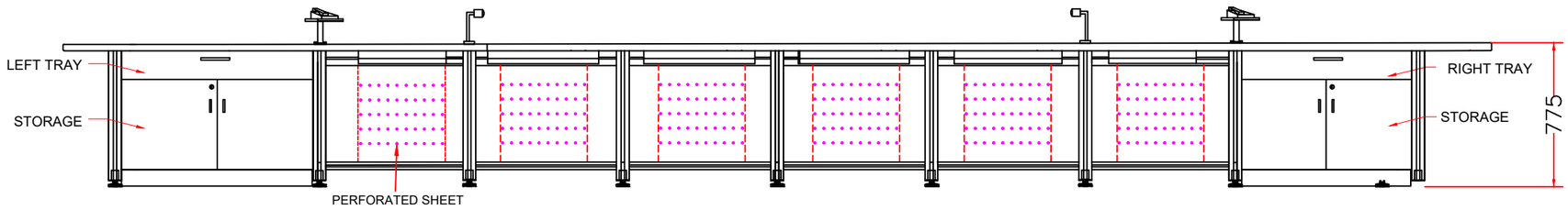

FRONT VIEW

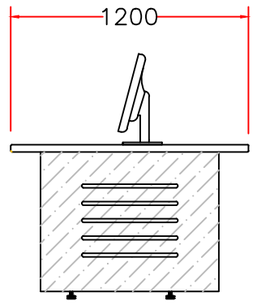

SIDE VIEW

PRODUCT : TALCHER THERMAL POWER PROJECT STG-III (2X660 MW)
CUSTOMER: M/s NTPC

BHARAT HEAVY ELECTRICALS LIMITED.
ELECTRONICS DIVISION, BANGALORE

REV.	DATE	ALTERED / CHECKED / APPROVED	REV.	DATE	ALTERED / CHECKED / APPROVED

	NAME	SIGN	DATE
DRAWN	S.H.K		21-10-2025
CHECKED	S.N		21-10-2025
APPROVED	B.N.S		21-10-2025

DEPT. ENGG | CODE 404

TITLE: OGA OF CONTROL DESK OF 8 mtrs

No. OF SHEETS 07
SHEET No. 03

WBS. No. CE/1895-PR1/2-56-01
DRG. No. 3 659 44 05471
REV 00

REF. DRG. No. 36594402806 01
SIGN. & DATE
INVENTORY No.

COPY RIGHT AND CONFIDENTIAL
THE INFORMATION ON THIS DOCUMENT IS THE PROPERTY OF BHARAT HEAVY ELECTRICALS LIMITED.
IT MUST NOT BE USED DIRECTLY OR INDIRECTLY IN ANY WAY DETRIMENTAL TO THE INTEREST OF THE COMPANY.

PURCHASE SPECIFICATIONS FOR UCD & ECD DRAW-OUT CONSOLES

PROJECT: NTPC TALCHER (2X660 MW) TPS

CUSTOMER: M/s NTPC LIMITED

COPY RIGHT AND CONFIDENTIAL
THE INFORMATION ON THIS DOCUMENT IS THE PROPERTY OF BHARAT HEAVY ELECTRICALS LIMITED. IT MUST NOT BE USED DIRECTLY OR INDIRECTLY IN ANY WAY DETRIMENTAL TO THE INTEREST OF THE COMPANY.

SPECIFICATION OF DRAW OUT CONSOLES WITH ENCLOSURES OF MAIN PLANT CONTROL DESK

1.0 **CONSTRUCTION**

1.1 The sections with draw out consoles shall be located on either end of the desk sections meant for operator consoles, and shall, in general, have similar constructional features, including top surface material and colour, as those of the sections meant for operator consoles. These two end section will be aligned and fixed with other desk sections, so that there is perfect match of the top surfaces. Each draw out consoles shall be constructed from 2 mm thick CRCA steel plates.

1.2 The left control desk section, will house a mosaic draw-out type console with a mosaic grid for Process console [CWD01] having 16 rows of 24 mm and 12 columns of 48 mm. Refer Drg No..: 4540-001-405-PVI-B-151. Process drawout console [CWD01] shall be provided on per unit basis. Total quantities of Process drawout console [CWD01] are 02 numbers (01 number per unit).
The profile should be similar to the one provided for monitors in the operator console.

1.3 The right control desk section, will house a mosaic draw-out type console with a mosaic grid for Electrical drawout console [CWD02] having 21 rows of 24 mm and 15 columns of 48 mm. Refer Drg No..: 4540-001-110-PVE-B-053.
It will also house a synchronization plaque with a mosaic grid console having 22 rows of 24 mm and 12 columns of 48 mm as per above documents.
Electrical drawout consoles [CWD02] shall be provided on per unit basis. Total quantities of Electrical drawout consoles [CWD02] are 02 numbers (01 number per unit).

1.4 The profile should be exactly similar to the one provided for monitors in the operator consoles, with adjustable mounting arrangement.
Synchroscope in the control desk shall remain concealed and come up to the top of the desk through an automatic (electrically operated) carriage management system.
Following Points to be ensured in concealed Synch. Plaque mechanism:

- Proper closing of Electrical draw-out while Synch. Plaque is in concealed condition.
- The TB's & other inside mounted items shall be clearly accessible while Synch. Plaque is in concealed condition.

1.5 **Vendor should ensure that both the draw out consoles should not protrude outside the control desk while the synchronization plaque is under concealed condition. Proper maintenance space shall be provided for access of all the internal mounted items when the synchronization plaque is under concealed condition. Detailed dimensional drawing indicating all the dimensional details shall be furnished by successful bidder for BHEL review.**

1.6 The metallic mosaic grid and mosaic items to be mounted on the above consoles shall be in the scope of the supplier. These mosaic grids and items [other than what is specified under 'Notes' in the subsequent annexures], shall be from either of the following sources:
i) TEW, Germany.
ii) Pro-plan, Germany.
The overall dimensions along with framework for the required mosaic grids as specified in 1.2 and 1.3 above shall be clearly brought out in the offer.

COPY RIGHT AND CONFIDENTIAL
THE INFORMATION ON THIS DOCUMENT IS THE PROPERTY OF BHARAT HEAVY ELECTRICALS LIMITED. IT MUST NOT BE USED DIRECTLY OR INDIRECTLY IN ANY WAY DETRIMENTAL TO THE INTEREST OF THE COMPANY.

1.7 The Layout drawings are subject to approval by customer - M/s NTPC. If the item/quantity shown is revised, or any additional items are added in the final approved drawing, the same to be taken care by the supplier without any financial and delivery implications. However, the total additional quantities for this implication shall be maximum 5% of the total contract quantities.

1.8 An overall general specification of all items is given in Annexure I,II & III. However, these has to be taken in conjunction with the Drg No.: 4540-001-405-PVI-B-151 & 4540-001-110-PVE-B-053.

1.9 Necessary support arrangements as required for the consoles shall be provided by the supplier.

1.10 Below the draw-out consoles, an enclosure shall be provided in each section for housing terminal blocks with 20% spares and such other components as may be required for complete wiring of the consoles. Enclosure shall facilitate direct access to any component mounted inside and shall have at least 20% free space for future expansion.

1.11 The left and right control desk section enclosures will have one double leaf door in the front, below the draw-out portion, and one double leaf door at the rear.

1.12 Each drawout consoles shall have removable gland plates made of 3.0 mm thick CRCA sheet. The gland plates shall be provided along with neoprene gasket. It should be fixed to the top flange of the bottom frame. The size of gland plates for each shipping section shall be suitably selected for easy handling & to accommodate all the field wirings.

1.13 **INTERNAL PANELS/ SYSTEM CABINETS WIRING**

1.13.1 The items to be mounted on draw-out consoles will be terminated on suitable terminal Blocks (TBs).

1.13.2 All wiring shall be with 1100V grade, single core, FRLS PVC insulated stranded copper conductor. 1100V grade Terminal Blocks shall be provided. Wires shall be vermin proof.

1.13.3 All internal wires shall be provided with tag and identification nos. etched on tightly fitted ferules at both ends. All wires directly connected to trip devices shall be distinguished by one additional red colour ferrule.

1.13.4 All external connection shall be made with one wire per termination point. Wires shall not be tapped or spliced between terminal points.

1.13.5 Each contact of each pushbutton shall be wired to dedicated TBs.

1.13.6 It has to ensured that the cables used for connection to items on the draw-out consoles should have sufficient length to facilitate full drawing out of console; without disturbing any of the terminations or damaging any of the cables or associated equipment. Cables, which terminate in cabinets of draw out sections shall have sufficient cable coiled in the bottom of the cabinet to permit full withdrawal of draw out sections without disconnecting the cables.

1.13.7 The terminal blocks for VTs connection to synchroscope shall be provided with test links and isolating facilities.

1.13.8 Wire sizes to be utilised for internal wiring shall be as per below table:

Sr. No.	Utility	Wire Size
i.	Current (4-20 mA), low voltage signals (24V); Pushbutton LED Modules, selector switches.	0.5 Sq.mm.
ii.	24VDC & 240VAC Power supply and internal illumination.	1.5 Sq.mm
iii.	VT supply to Synchroscope	2.5Sq.mm

COPY RIGHT AND CONFIDENTIAL
THE INFORMATION ON THIS DOCUMENT IS THE PROPERTY OF BHARAT HEAVY ELECTRICALS LIMITED. IT MUST NOT BE USED DIRECTLY OR INDIRECTLY IN ANY WAY DETRIMENTAL TO THE INTEREST OF THE COMPANY.

1.13.9 The conductor shall be composed of tinned annealed high conductivity copper wire with electrical and mechanical properties in accordance with IS:8130. The details of the conductor shall be as per Table-1.

1.13.10 The resistance of the conductor at 20° C shall not exceed the appropriate maximum value given in the Table-1. The conductor resistance measured for a length of 25 cm and compared with the resistance of the conductor without any joint shall be not more than 5 % of the resistance of adjacent conductor.

1.13.11 The insulation shall be provided with polyvinylchloride compound conforming to the requirements of type-YM1 as per VDE 0207 Part-5 & shall be of FRLS type. The average thickness of insulation shall not be less than the nominal value (ti) specified in Table-1.

1.13.12 Insulation shall be applied over the conductor by extrusion method, in such a way that it fits closely on the conductor and shall be possible to remove it easily, without damage to the conductor.

1.13.13 Joining of core insulation material is not acceptable and repair work on insulation of core also is not acceptable.

1.13.14 **ELECTRICAL TESTS:**

1.13.14.1 **HIGH VOLTAGE TEST:**

- High voltage test at room temperature (Routine test) as per IS:694. The cable shall withstand an AC voltage of 3 kV (rms).
- High voltage test (Water Immersion Test-AC Test) (Type and acceptance Test) as per IS:694. The cable shall withstand an AC voltage of 3 kV (rms).
- **SPARK TEST:** IS 694, Clause 16.4 (Routine Test): Test Voltage 5 KV RMS (In process Test by manufacturer, verification of Test report by BHEL).
- Insulation Resistance: (IS:5831) (Routine) : Insulation resistance test shall be carried out at 500 volt D.C. The value of volume resistivity when calculated from the measured insulation resistance value shall not be less than $1.0X10^{13}$ Ohm-cm at 70^0C and $1.0X10^{10}$ Ohm-cm at 70^0C.

1.13.14.2 **PHYSICAL TEST ON INSULATION (Type Test):** Tensile strength, elongation at break, Heat aging, Heat shock, Shrinkage, Cold bend and Cold impact test shall meet the requirements of Type - A of IS: 5831.

1.13.14.3 **TESTS FOR FRLS PROPERTIES (Routine Test):**

Oxygen Index Test(OI): Minimum oxygen index at 25 deg C as per ASTM-D-2863.	29
Temperature Index Test: Minimum temperature Index at OI=21 calculating by method of extrapolation as per ASTM-D-2863 & BICC handbook.	250 DegC
HCl Acid Gas Estimation: Maximum acid gas generation by weight as per IEC-60754 Part I.	20%
Smoke Density Test: Maximum smoke density rating as per ASTM-D-2843.	60%
Flammability Tests: As per IEC-60332-1.	
Thermal Heat Stability Test : At 200 deg C for minimum of 80 minutes as per IEC-60811 P3.	
Swedish Chimney test as per SEN-SS 424 1475 class F3.	

COPY RIGHT AND CONFIDENTIAL
THE INFORMATION ON THIS DOCUMENT IS THE PROPERTY OF BHARAT HEAVY ELECTRICALS LIMITED. IT MUST NOT BE USED DIRECTLY OR INDIRECTLY IN ANY WAY DETRIMENTAL TO THE INTEREST OF THE COMPANY.

TABLE - 1

Sl. No	Conductor cross sectional area. nominal	Diameter of wires in conductor maximum.	Diameter of bunched conductor maximum.	Conductor resistance at 20 Deg C. maximum.	Insulation Thickness nominal	Overall dia. max	packing length per bobbin	Bobbin type
	Sq. mm	**mm**	**mm**	**ohms/KM**	**mm**	**mm**	**meters**	
1	0.50	0.21	0.93	40.1	0.6	2.5	1000	Plastic
2	0.75	0.21	1.14	26.7	0.6	2.7	1000	Plastic
3	1.00	0.21	1.32	20.0	0.6	2.8	1000	Plastic
4	1.50	0.26	1.60	13.7	0.6	3.1	500	Plastic
5	2.50	0.26	2.00	8.21	0.7	3.8	500	Plastic
6	4.00	0.31	2.60	5.09	0.8	4.8	300	Plastic/ Plywood
7	6.00	0.31	3.60	3.39	0.8	6.3	300	Plastic/ Plywood
8	10.00	0.41	4.60	1.95	1.0	7.6	100	Plastic/ Plywood
9	16.00	0.41	5.70	1.24	1.0	8.8	100	Plastic/ Plywood
10	25.00	0.41	7.10	0.795	1.2	11.0	100	Plastic/ Plywood
11	50.00	0.41	10.30	0.393	1.4	14.5	100	Plastic/ Plywood

COPY RIGHT AND CONFIDENTIAL
THE INFORMATION ON THIS DOCUMENT IS THE PROPERTY OF BHARAT HEAVY ELECTRICALS LIMITED. IT MUST NOT BE USED DIRECTLY OR INDIRECTLY IN ANY WAY DETRIMENTAL TO THE INTEREST OF THE COMPANY.

1.14 Documents to be submitted along with the technical offer:
a. Overall General Arrangement drawing.
b. Internal General Arrangement drawing with front view, side view etc.
c. Detailed BOM with make & model of all the components.
d. Synch plaque mechanism details.

1.15 The Items shall be arranged as per Customer approved final Layout drawings. In case of decrease in item quantities, specified in subsequent Annexures w.r.t the final approved drawings, the extra items will have to be supplied loose as per BHEL requirement.

1.16 The mosaic grid tiles shall be of 24 mm x 48 mm (or 25 mm x 50 mm) size, made of heat and flame retardant, self-extinguishing and non-hygroscopic material with flat matt finish without glare and nonreflecting type.

1.17 In the event of P.O., the vendor is required to submit Detailed BOM with make & model of all the components with Console Layout drawings, overall general arrangement drawing, Internal general arrangement drawings for the internal arrangement of components, Synch plaque mechanism details & Electrical schematic drawing with wiring of all console items up to the terminal blocks and Quality plan.
BOM to include the following:

- All mosaic mounted items with make/part no., inside mounted item details, datasheets of mosaic mounted items.

All the above documents are required to be submitted to BHEL within 10 days of award of contract. In case of comments from BHEL, revised document have to be resubmitted within 03 working days from receipt of comments.
All documents are required to be submitted to customer for approval.

1.18 List of Mandatory Spares to be supplied for these console is given in subsequent pages - Annexure III.
However, this list shall be based on final approved layout & subjected to approval by customer - M/s NTPC. If the quantity specified is revised, or any additional items are added in the final approved list, the same to be taken care by the supplier. Hence, a separate lump sum price, along with unit prices, is to be quoted for Mandatory Spares.

1.19 **BOILER TRIP EMERGENCY PUSH BUTTONS**

04 Numbers of Emergency push buttons with:

- 6 NC contacts with minimum rating of 5A each for each emergency push button.
- Protective transparent enclosure covers to stop accidental press of each emergency push buttons shall be provided by bidder.
- Each emergency push button shall be wired upto TBs to be housed in enclosure.

02 Numbers of Emergency push buttons for MFT-1, MFT-2 to be mounted on Unit Control Desk (on TABLE TOP) per unit basis by bidder at site.

These 04 numbers Emergency push buttons are in bidder's scope and shall be provided with individual protection cover. All the hardware's, mounting plate/mosaic grid etc. required to mount these 04 number emergency trip push buttons on table top is also under bidder's scope. These 04 numbers Emergency push buttons shall be supplied along with drawout consoles.

COPY RIGHT AND CONFIDENTIAL
THE INFORMATION ON THIS DOCUMENT IS THE PROPERTY OF BHARAT HEAVY ELECTRICALS LIMITED. IT MUST NOT BE USED DIRECTLY OR INDIRECTLY IN ANY WAY DETRIMENTAL TO THE INTEREST OF THE COMPANY.

All the other details of these 04 numbers Emergency push button shall be as per below table:

Make - M/s SCHMERSAL, Germany

DESCRIPTION	MODEL NO.	QTY/PUSH BUTTON	QTY PER UNIT	TOTAL QTY
Non-Illuminated Head	E2-40/03	1	2	4
Coupling for Non-Illuminated Head	RMF-02	1	2	4
Contact Element - 1NC	CLP101 S/EMB/BULA CONTACT BLOCK	6	12	24
Enclosure Box	ENCLOSURE BOX (80X82X85) BOPLA-T 225	1	2	4
Emergency stop signs	MDP-8	1	2	4

1.20 **AUXILIARY BOILER TRIP EMERGENCY PUSH BUTTONS**

02 Numbers of Emergency push buttons with:

- 6 NC contacts with minimum rating of 5A each for each emergency push button.
- Protective transparent enclosure covers to stop accidental press of each emergency push buttons shall be provided by bidder.
- Each emergency push button shall be wired upto TBs.

02 Numbers of Emergency push buttons for Auxiliary boiler trip to be mounted on Auxiliary Boiler Control Desk (on TABLE TOP) by bidder at site.

These 02 numbers Emergency push buttons are in bidder's scope and shall be provided with individual protection cover. All the hardware's, mounting plate/mosaic grid etc. required to mount these 02 number emergency trip push buttons on table top is also under bidder's scope. These 02 numbers Emergency push buttons shall be supplied along with auxiliary boiler control desk

All the other details of these 02 numbers Emergency push button shall be as per below table:

Make - M/s SCHMERSAL, Germany

DESCRIPTION	MODEL NO.	QTY/PUSH BUTTON	TOTAL QTY
Non-Illuminated Head	E2-40/03	1	2
Coupling for Non-Illuminated Head	RMF-02	1	2
Contact Element - 1NC	CLP101 S/EMB/BULA CONTACT BLOCK	6	12
Enclosure Box	ENCLOSURE BOX (80X82X85) BOPLA-T 225	1	2
Emergency stop signs	MDP-8	1	2

COPY RIGHT AND CONFIDENTIAL
THE INFORMATION ON THIS DOCUMENT IS THE PROPERTY OF BHARAT HEAVY ELECTRICALS LIMITED. IT MUST NOT BE USED DIRECTLY OR INDIRECTLY IN ANY WAY DETRIMENTAL TO THE INTEREST OF THE COMPANY.

1.21 02 numbers Emergency push buttons required for Turbine trip and Oil & Fire Prot Trip are also in bidder's scope and shall be mounted on Unit Control Desk (on TABLE TOP) per unit basis. All the hardware's, mounting plate/mosaic grid etc. required to mount these 02 number emergency trip push buttons on table top is also under bidder's scope. These 02 numbers Emergency push buttons shall be supplied along with drawout consoles.

Other details of the above 02 numbers Emergency push buttons shall be as follows:

- 1NO+3NC contacts with minimum rating of 2A each are required for Turbine trip Emergency push button.
- 4NO contacts with minimum rating of 2A each are required for Oil & Fire Prot Trip Emergency push button.
- Protective transparent enclosure covers to stop accidental press of each emergency push buttons shall be provided by bidder.
- All the above 02 numbers Emergency push buttons shall be wired upto TBs to be housed in enclosure.

TURBINE TRIP EMERGENCY PUSH BUTTONS

Make - M/s SCHMERSAL, Germany

DESCRIPTION	MODEL NO.	QTY/PUSH BUTTON	TOTAL QTY
EMERGENCY STOP BUTTON	EDRR 40RT	1	2
MOUNTING BOX FOR CONTROL DEVICE	MBGH 311GB	1	2
CONTACT ELEMENT 2NC	EF220.1	1	2
CONTACT ELEMENT 1NO+1NC	EF303.1	1	2
SPRING ELEMENT MODULE	EFR	1	2
EMERGENCY STOP SIGNS	MDP-8	1	2

OIL & FIRE PROT TRIP EMERGENCY PUSH BUTTONS

Make - M/s SIEMENS

DESCRIPTION	MODEL NO.	QTY/PUSH BUTTON	TOTAL QTY
MUSHROOM EMERGENCY STOP BUTTON WITH HOLDER	3SB50 00-0VC01	1	2
CONTACT BLOCK 2NO	3SB54 00-0E	2	4
INSCRIPTION LABEL WITH OIL & FIRE PROT TRIP ENGRAVED	3SB59 21-0AB	1	2

1.22 Supplier to provide assistance at site for

- erection of the drawout console desk sections.
- any modification or alteration w.r.t addition/deletion/relocation of components and
- any wiring to be done at site.

Separate price to be quoted for site work of these sections. This price shall however be claimed by the vendor only on actual visit to and completion of work at site.

COPY RIGHT AND CONFIDENTIAL
THE INFORMATION ON THIS DOCUMENT IS THE PROPERTY OF BHARAT HEAVY ELECTRICALS LIMITED. IT MUST NOT BE USED DIRECTLY OR INDIRECTLY IN ANY WAY DETRIMENTAL TO THE INTEREST OF THE COMPANY.

2.0 GENERAL TECHNICAL REQUIREMENTS:

2.1 The panels, console/desks shall be reinforced as required to ensure true surfaces and adequate support for instruments mounted thereon. All instrument cutouts, mounting studs, and support brackets shall be accurately located. All welds on the exposed panel surfaces shall be ground smooth. Finished panel surfaces shall be free from waves, bellies, or other imperfections. Panel doors shall be 4 points hinged and shall have turned back edges and additional bracing where required to ensure rigidity. Door hinges shall be of the concealed type. Door latches shall be of the three/four -point type to ensure tight closing. Doors shall be provided with neoprene/polyurethane gasket only.

2.2 Protection class shall be IP-42.

2.3 All the cable entries shall be from the bottom.

2.4 All the drawout consoles shall be provided with a continuous bare copper ground bus. The ground bus shall be bolted to the panel structure on bottom on both sides. The bolts shall face inside of panels. All internal component grounds or common shall be connected to the system ground, which shall be fabricated of copper flat (size 50mm x 6mm & minimum length as applicable). All metallic cases of the mounted equipment shall be separately connected to the earth bus by 4.0mm^2 copper wires. No loops in the earth wiring shall be permitted.

2.5 Terminal blocks shall be Rail mounted 1100 V AC grade Terminal blocks (Screw less cage clamp type for push button, LED wirings and Clip-on TB 10 sqmm for rest connections) with markers and 20% spare wired terminals of each type. The terminal blocks shall be located to allow easy access.
For the 24VDC feeders, 05 numbers (04 numbers connected +01 number spare) Terminal Blocks with Locking nut TBs shall be provided. Part No: CBT 250(Elemex).

2.6 Panels shall be provided with LED based illuminating lamps with door switch and six (6) point 5/15A, 240V AC universal type power sockets with switch for maintenance purposes. These switches shall be with quick make and break mechanism.

2.7 All fuses shall be fast acting semiconductor types for AC/DC supply. All the AC power supplies shall be provided with the protection of Fast acting semi conductor fuses & 2 P thermo magnetic type MCBs with C characteristic. For all the DC power supply circuits, electronic type DC MCBs shall be used only. 50 % spare fuses shall be provided with each panel, these are in additional to mandatory spares.

2.8 Miniaturized push buttons shall be provided as actuating elements to meet the functional requirements for start/stop of Motor/pump, open/close of damper/valve/ electrical breakers, safe shut down of the unit.

2.9 The drawout console shall be equipped with Anti vibration pad of min. 15 mm size thickness. Cable gland plate thickness shall be 3 mm. Base support frame height shall be min. 100 mm. Doors shall be provided with neoprene gasket only.

COPY RIGHT AND CONFIDENTIAL
THE INFORMATION ON THIS DOCUMENT IS THE PROPERTY OF BHARAT HEAVY ELECTRICALS LIMITED. IT MUST NOT BE USED DIRECTLY OR INDIRECTLY IN ANY WAY DETRIMENTAL TO THE INTEREST OF THE COMPANY.

2.10 While all efforts have been made to make the specification requirement complete & unambiguous, it shall be bidders' responsibility to ask for missing information, ensure completeness of specification, to bring out any contradictory/ conflicting requirement in different sections & sub -sections of the specification and within a section itself to the notice of BHEL and to seek any clarification on specification requirement during pre-bid clarification stage. In absence of any such clarifications, in case of any contradictory requirement, the more stringent requirement as per interpretation of BHEL / Customer shall prevail and shall be complied by the bidder without any commercial / delivery implication on account of the same.

2.11 Suppliers internal test certificates for dimensions, visual, paint, HV, IR, electrical functions etc. to be submitted to BHEL before giving inspection call.

2.12 All the drawout consoles shall be furnished fully wired with necessary provision for internal lighting, grounding, ventilation, space heating, antivibration pads, internal piping & accessories as required for completeness of the system. The bottom of consoles shall be sealed with bottom plate and fire proof sealing material to prevent ingress of dust and propagation of fire.

2.13 All the drawout consoles shall have wiring arrangement suitable for ease of termination and maintenance. For this, all drawout consoles shall be factory wired to terminals mounted on desk. Further connection to marshalling cabinets of DDCMIS shall be done through a common terminal box which shall be located suitably in the cable vault area.

2.14 Inspection by BHEL/Customer at the vendors works. Items will be directly dispatched to project site. Details shall be intimated at the time of PO

2.15 Modification if necessitated as per site requirement, to be done at no additional cost.

2.16 Any item/work either supply of equipment or erection material which have not been specifically mentioned in but are necessary to complete the woks for trouble free and efficient operation of the plant shall be deemed to be included within the scope of this specification and shall be in bidder's scope without any commercial, technical and delivery implication to BHEL.

2.17 All the consoles, termination boxes etc. shall have at least 20% free space for future expansion.

COPY RIGHT AND CONFIDENTIAL
THE INFORMATION ON THIS DOCUMENT IS THE PROPERTY OF BHARAT HEAVY ELECTRICALS LIMITED. IT MUST NOT BE USED DIRECTLY OR INDIRECTLY IN ANY WAY DETRIMENTAL TO THE INTEREST OF THE COMPANY.

2.18 SURFACE PREPARATION AND PAINTING

2.18.1 PREPARATION OF THE PAINTS :

- Before application of paint, check and ensure that the shelf life of the paint (expiry date of paint as given on the drum/ by manufacturer shall not be lapsed). Check any skin formed on the paint in the container shall be carefully removed, any settled pigment broken up and the paint thoroughly stirred.
- While stirring, ensure complete and uniform mixing of constituents. Care shall be taken to avoid entrapment of air in the paint. The paint shall be strained through a muslin cloth.
- Mix the primer and finish paints with thinner such that the consistency (viscosity) at ambient temperature when measured using Ford Cup No.4 as per IS: 101 is 30 +/- 2 seconds.

2.18.2 SURFACE PREPARATION:

The metallic surfaces to be painted shall be given a chemical pretreatment as per below details. Items shall be painted after pretreatment with minimum time lapse. Before painting, wipe off the pre-treated surface with clean cotton cloth to remove white powdery deposit, if any.
The components to be degreased shall not have excess oil or grease. If excess oil or grease is found, components shall be wiped off using cloth prior to immersion. The components to be deoxidized/ derusted shall not have excessive rust scaling. If excessive rust/scale is present they shall be removed by emerying or items shall be segregated and treated separately considering immersion time and concentration of the bath. Initially, when the fresh bath is prepared, use the bath for 2 to 3 hours using clean dummy loads so that the bath is stabilized/ aged. Fresh chemicals shall be added to the bath after titration check to maintain specified concentration. Titration shall be done periodically according to the loading to ensure concentration. Remove the sludge at the bottom of the tank periodically.
The piece part shall be immediately dried after passivation using dry compressed air blast.
The components to be treated shall be immersed in the tanks made of steel with suitable lining with chemicals, temperature and dipping time as given below.

Sr. No.	PROCESS See Note 3	CONCENTRATION (CHEMICAL IN WATER)	POINTAGE	BATH TEMP (DEG C)	DIPPING TIME
01	DEGREASING (if hot)	3-5 % WT/VOL	27-45	80-90	10-15 MINUTES
	DEGREASING (if cold)	10-15 % WT/VOL	80-90	ROOM TEMP	10-15 MINUTES
02	RINSING IN COLD RUNNING WATER TANK WITH OVERFLOW ARRANGEMENT				
03	DERUSTING (Cold)	20-40% VOL/VOL	20-40	ROOM TEMP	10-20 MINUTES
04	RINSING IN COLD RUNNING WATER TANK WITH OVERFLOW ARRANGEMENT				
05	PHOSPHATING (Cold) See Note 1	5-6 % VOL/VOL	25-30	ROOM TEMP	20-30 MINUTES
06	RINSING IN COLD RUNNING WATER TANK WITH OVERFLOW ARRANGEMENT				
07	PASSIVATION (if hot)	0.1-0.2% VOL/VOL	Free acid: 0.1-0.2 ml per 25 ml; Total acid: 2.5 ml max per 25 ml	80-90	30-45 MINUTES
	PASSIVATION (if cold)	Same as above	Same as above	ROOM TEMP	2-3 MINUTES

COPY RIGHT AND CONFIDENTIAL
THE INFORMATION ON THIS DOCUMENT IS THE PROPERTY OF BHARAT HEAVY ELECTRICALS LIMITED. IT MUST NOT BE USED DIRECTLY OR INDIRECTLY IN ANY WAY DETRIMENTAL TO THE INTEREST OF THE COMPANY.

2.18.3 Panel exterior steel surfaces shall be ground smooth, and painted as specified below: Suitable filler shall be applied to all pits, blemishes and voids in the surfaces. The filler shall be sand blasted so that surfaces are level and flat, corners are smooth and even. Exposed raw metal edges shall be ground burr free. The entire panel surface shall be sand blasted to remove rust and scale and all other residue due to the fabrication operation. Oil grease and salts etc. shall be removed from the panels by one or more solvent cleaning methods. Alternatively 7 tank process shall be followed.

2.18.4 Two spray coats of inhibitive epoxy primer – surface shall be applied to all exterior and interior surfaces; each coat of primer surface shall be of dry film thickness of 1.5 mil. A minimum of two spray coats of final finish colour (Catalysed epoxy finish) shall be applied to all surfaces of dry film thickness 2.0mil. The final finished thickness of paint film on steel shall not be less than 75 microns. The Bidder shall also furnish sufficient touch-up paint for one complete finish coat on all exterior factory applied painted surface of each item of equipment. The finish colours for exterior and interior surfaces shall conform to the following shades:

a) Exterior for front & rear of consoles - RAL: 9002 (Structure Semi glossy finish).
b) Interior for front & rear of consoles - RAL: 9002 (Structure Semi glossy finish).
c) Interior & Exterior for Side covers of consoles - RAL: 5012 (Structure Semi glossy finish).

2.18.5 Paint films, which show sags, checks, blisters teardrops, fat edges or other painting imperfections, shall not be acceptable and if any such defects appear, they shall be repaired by and at the expenses of the Bidder.
However, if there is any change in colour and paint thickness based on customer comments, the same shall be communicated to the vendor. There shall be no change in price due to this.

2.19 O&M Manual (No of Sets):

- Two (2) soft copies(CDs) created in generally accepted standard computer programs (e.g. Microsoft office, Auto Cad etc.).
- Ten (10) sets of hard copies (Hard board plastic folders).

COPY RIGHT AND CONFIDENTIAL
THE INFORMATION ON THIS DOCUMENT IS THE PROPERTY OF BHARAT HEAVY ELECTRICALS LIMITED. IT MUST NOT BE USED DIRECTLY OR INDIRECTLY IN ANY WAY DETRIMENTAL TO THE INTEREST OF THE COMPANY.

3.0 PACKING DETAILS:

- Wooden packing shall be strong and efficient enough to ensure safe preservation without moisture ingress up to the final point of destination.
  - All packages should be wrapped in transparent polythene inside the crates for effective weather proofing.
  - Proper pallets and crates are to be used for packing.
  - Packing cases shall be marked to show the following:
    a. Upright position.
    b. Sling position and center of gravity position.
    c. Storage Category.
    d. Fragile components.
  - The four sides of package shall be lined from inside with packing paper water proof bitumen laminated or polyethylene sheet and tacked at suitable places. Whenever specified in addition to the bitumen laminated paper/polyethylene sheet the top cover will have a layer of bitumen felt over the cover. This should project about 100-250 mm on all sides. It is preferable to have a single piece of the above Kraft paper fixed on all four sides. In case is jointing is unavoidable, I should be done by overlapping of approximately 100 mm.
  - For Electrical and Electronic components, a rubber sheet, self-expandable polyethene foam sheet, preferable 10 mm thick, shall be fixed on the base to act as cushioning to the equipment.
  - To avoid moisture ingress and for corrosion inhibition, provide Silica gel bags/VCI powder tablets, as applicable.
  - Cover the whole equipment with polyethylene sheet of at least 100-micron thickness, on all sides preferably by a single piece.
  - To absorb shocks during transit- Thermocole/wood wool/Polyethylene air bubble film should be placed in Empty spaces / space between the material and wooden body.
  - The inner side of the top cover shall be lined with polyethylene sheet of at least 100-micron thickness, which shall project approximately 25 to 150 mm depending upon the size of the case on all sides of the top cover. This projection after nailing the top cover shall be folded over on the sides of the crates and tacked to prevent ingress of water from the top.
  - Top surface of the case shall be free from dents to prevent rain water pockets.
  - While fixing nails during packing, necessary care shall be taken to ensure that materials used for protection inside the case e.g. paper, polyethylene sheet, coir etc. do not get damaged.
  - Sling protection brackets to be provided on cases wherever required.
  - One copy of detailed packing list should be kept inside the package. One packing holder with packing list should be provided outside of the package. The packing list holder/aluminum holder should also be sealed in thick polyethylene film
- Unit 1, 2 Drawout Consoles, CHP Drawout Consoles, termination boxes should be packed separately.
- Spares should be packaged separately
- Labels should be put on the packages to identify area wise (Unit-1, 2, CHP, Termination boxes) materials.
- One copy of detailed packing list should be kept inside the package. One packing holder with packing list should be provided outside of the package. The packing list holder/aluminum holder should also be sealed in thick polyethylene film

COPY RIGHT AND CONFIDENTIAL
THE INFORMATION ON THIS DOCUMENT IS THE PROPERTY OF BHARAT HEAVY ELECTRICALS LIMITED. IT MUST NOT BE USED DIRECTLY OR INDIRECTLY IN ANY WAY DETRIMENTAL TO THE INTEREST OF THE COMPANY.

ANNEXURE - I
LIST OF ITEMS FOR CONTROL DESK SECTION FOR UNIT-1 & UNIT-2
CWD01 [PROCESS DRAW OUT CONSOLE]

Sr. No	DESCRIPTION	QUANTITY /UNIT	TOTAL QUANTITY
1.	Emergency OFF PB with red colour protective cover. Size: 48x48 mm. Contacts: 4 Changeover suitable for 24V DC with minimum contact rating of 02 Amperes. Connection with Plug-in connector. Module colour RAL 7035.	03	06
2.	Recessed PB module. PB colour: Grey. Size: 48x24 mm. Contacts: 2 NO suitable for 24V DC with minimum contact rating of 300mA. Connection with Plug-in connector. Module colour RAL 7035.	06	12
3.	PB module with 2 PB and 3 LEDs. Size 48x24 mm. Button colour: Red, Green. LED colour: Green, Yellow, Red. PB's with 2 NO contacts suitable for 24V DC with minimum contact rating of 300mA. LED's suitable for 24 V DC. Connection with Plug-in connector. Module colour RAL 7035.	43	86
4.	PB module with 1 PB and 2 LEDs. Size 48x24 mm. Button colour: Red. LED colour: Green, Red. PB's with 2 NO contacts suitable for 24V DC with minimum contact rating of 300mA. LED's suitable for 24 V DC. Connection with Plug-in connector. Module colour RAL 7035.	19	38
5.	4 LED signal module. LED colour: column 1 -Red, column 2- Green. Size: 48x24 mm. LEDs suitable for 24V DC. Connection with rear Plug-in connector. Module colour RAL 7035.	07	14
6.	2 LED signal module. LED colour: All Red. Size: 48x24 mm. LEDs suitable for 24V DC. Connection with rear Plug-in connector. Module colour RAL 7035.	01	02
7.	2 LED signal module. LED colour: Red, Green. Size: 48x24 mm. LEDs suitable for 24V DC. Connection with rear Plug-in connector. Module colour RAL 7035.	02	04
8.	3 LED signal module. LED colour: All Red. Size: 48x24 mm. LEDs suitable for 24V DC. Connection with rear Plug-in connector. Module colour RAL 7035.	04	08
9.	Key operated Switch. 2 positions. Size: 48x24 mm. Module colour RAL 7035. Configuration: 2 pole 2 position stay put. Key removable in position-01 only. Contacts rating: 24V DC, 10A.	05	10

COPY RIGHT AND CONFIDENTIAL
THE INFORMATION ON THIS DOCUMENT IS THE PROPERTY OF BHARAT HEAVY ELECTRICALS LIMITED. IT MUST NOT BE USED DIRECTLY OR INDIRECTLY IN ANY WAY DETRIMENTAL TO THE INTEREST OF THE COMPANY.

Sr. No	DESCRIPTION	QUANTITY /UNIT	TOTAL QUANTITY
10.	Plug-in connectors suitable for above modules. [If connectors are different for different type of items, actual quantity of each type of connector shall be accordingly split and quoted].	As required	As required
11.	Blank tiles. Size: 48x24 mm. Module colour RAL 7035.	As required [70 number minimum]	As required [140 number minimum]
12.	Blank modules with engravings as per drawings. Size: 48x24 mm. Module colour RAL 7035.	As required	As required
13.	Digital Display module. • 4 digits, Float decimal, with +/- sign. • Display colour: Green LED Seven segment display. • Mounting: Flush panel. • Power Supply: 24V DC+/- 10%. • Screw type connector. • Input- 4-20mA DC. • Accuracy: 0.1% of final value or better. • Size: 48 mm (W) x 24 mm (h). • Programmable type with push button provided on each Digital Display module. • Ranges as given below:	16	32

Digital Indicator service		Range
1.	FURNACE PRESSURE	(-) 250 to 250 mmWC.
2.	FEED WATER FLOW	0-3000 TPH
3.	HOT WELL LEVEL	0-5000 mm
4.	CONDENSER VACUUM	-1-0 Kg/Cm2
5.	JOP TDBFP-A PRESSURE	0-150 Kg/Cm2
6.	LOP TDBFP-A PRESSURE	0-150 Kg/Cm2
7.	JOP TDBFP-B PRESSURE	0-150 Kg/Cm2
8.	LOP TDBFP-B PRESSURE	0-150 Kg/Cm2
9.	TURBINE SPEED	3600 RPM
10.	TOTAL MW	0-720 MW
11.	SEPARATOR LEVEL	0-1500 mm
12.	DEAERATOR LEVEL	0-4000 mm
13.	COND FLOW	0-2200 TPH
14.	SEAL OIL/GEN H2 DP	0-10 BAR
15.	JOP TURBINE PRESSURE	0-150 Kg/Cm2
16.	LOP TURBINE PRESSURE	0-150 Kg/Cm2

17.	Mosaic Grid along with frame to house the above items. 16 rows of 24 mm and 12 columns of 48 mm. Module colour RAL 7035.	01	02
18.	Crimping tool for mosaic items for making connections. [To be supplied loose].	01	02
19.	Removal tool for mosaic items from mosaic items. [To be supplied loose].	01	02

COPY RIGHT AND CONFIDENTIAL
THE INFORMATION ON THIS DOCUMENT IS THE PROPERTY OF BHARAT HEAVY ELECTRICALS LIMITED. IT MUST NOT BE USED DIRECTLY OR INDIRECTLY IN ANY WAY DETRIMENTAL TO THE INTEREST OF THE COMPANY.

Sr. No	DESCRIPTION [INSIDE MOUNTED ITEMS]	QUANTITY /UNIT	TOTAL QUANTITY
1.	Crimp contacts suitable for inserting into connectors for wiring	As required	As required
2.	Cage clamp 8 level TBs with 2 input and 2 outputs with shorting links and accessories	As required +20% spare	As required +20% spare
3.	Clip-on TB 10 sqmm with accessories.	As required +20% spare	As required +20% spare
4.	Fuse TB with blown fuse indication by LED along with Fuse Cartridges. To be provided for input power supply to each digital indicators.	As required +20% spare	As required +20% spare
5.	Door switches.	02	04
6.	LED Lamp.	02	04
7.	Fuse 4A with fuse base.	01	02
8.	HRC Link.	01	02
9.	Power socket 5/15A.	01	02
10.	Miniature Ckt. Breaker. 230/400 VAC, Double pole 6A.C-characteristic	02	04

NOTES:

1. The quantities as indicated above are applicable for Unit-1. Similar quantities shall be followed for Unit-2 also.
2. Orientation of LEDs are as per console layout drawing.
3. Inscriptions on the mosaic tiles shall be provided as per final approved Layout drawing.
4. Internally mounted items and their quantities will be as per requirement in final approved layout.
5. Internally mounted items & their quantities are subjected to change, based on the final approved schematic diagram.
6. Total no. of connections will be approximately:
   CWD01: 1250 connections.
7. Digital Indicators shall be procured from following suppliers:
   - Weigell Messgerate, Germany
   - Gossen, Germany
   - Metrowatt, Germany
   - Camille Bauer, Germany
   - ABB, Germany
   - Yokogowa, Japan
   - Foxbro, UK
   - Siemens,Germany
   - Chino, Japan
   - Pyrotech,India.

COPY RIGHT AND CONFIDENTIAL
THE INFORMATION ON THIS DOCUMENT IS THE PROPERTY OF BHARAT HEAVY ELECTRICALS LIMITED. IT MUST NOT BE USED DIRECTLY OR INDIRECTLY IN ANY WAY DETRIMENTAL TO THE INTEREST OF THE COMPANY.

8. Cage & clamp type TBs shall be procured from following suppliers:

Sr. No.	Supplier	Country/Place
1.	Weidmuller	Germany
2.	Phoenix	Germany/India
3.	Wago	Germany/India
4.	Elmex	Vadodara
5.	Connectwell	Mumbai

9. 1.1 KV Control Cables (PVC, FRLS Type) shall be procured from following suppliers:

Sr. No.	Supplier	Country/Place
1.	Advance Cable	Bengaluru
2.	Apar Industries Ltd	Umbergaon
3.	Cords Cables	Bhiwadi
4.	CMI	Faridabad
5.	CMI	Baddi
6.	Delton Cables Ltd.	Faridabad
7.	Elkay Telelink	Faridabad
8.	Gemscabs Industries	Bhiwadi
9.	Goyoline Fibres (I) Ltd	Daman
10.	Gupta Power Cables	Khurdha
11.	Havells India Ltd.	Alwar
12.	KEC International	Silvassa , Mysore
13.	KEI Industries Ltd.	Bhiwadi
14.	Paramount Cables	Khushkhera
15.	Polycab Wires Pvt. Ltd.	Daman
16.	Ravin Cables	Pune
17.	Special Cables	Rudrapur
18.	Suyog Cables	Vadodara
19.	ThermoCables	Hyderabad
20.	Tirupati Plastomatics	Jaipur
21.	Torrent Cable Ltd	Nadiad
22.	Universal Cable	Satna

Note: The above listed vendors are subject to customer approval.

COPY RIGHT AND CONFIDENTIAL
THE INFORMATION ON THIS DOCUMENT IS THE PROPERTY OF BHARAT HEAVY ELECTRICALS LIMITED. IT MUST NOT BE USED DIRECTLY OR INDIRECTLY IN ANY WAY DETRIMENTAL TO THE INTEREST OF THE COMPANY.

ANNEXURE – II
LIST OF ITEMS FOR CONTROL DESK SECTION FOR UNIT-1 & UNIT-2
CWD02 [ELECTRICAL DRAW OUT CONSOLE]

Sr. No	DESCRIPTION	QUANTITY /UNIT	TOTAL QUANTITY
1.	PB module with 3 PB and 4 LEDs. Size 48x24 mm. Button colour: Red, Grey, Green. LED colour: Green, Yellow, Blue, Red. PB's with 2 NO contacts suitable for 24V DC with minimum contact rating of 300mA. LED's suitable for 24 V DC. Connection with Plug-in connector, Module colour RAL 7035.	07	14
2.	PB module with 3 PB and 3 LEDs. Size 48x24 mm. Button colour: All Grey. LED colour: All Red. PB's with 2 NO contacts suitable for 24V DC with minimum contact rating of 300mA. LED's suitable for 24 V DC. Connection with Plug-in connector, Module colour RAL 7035.	01	02
3.	PB module with 2 PB and 4 LEDs. Size 48x24 mm. Button colour: Red, Green. LED colour: Green, Yellow, Blue, Red. PB's with 2 NO contacts suitable for 24V DC with minimum contact rating of 300mA. LED's suitable for 24 V DC. Connection with Plug-in connector, Module colour RAL 7035.	20	40
4.	PB module with 2 PB and 3 LEDs. Size 48x24 mm. Button colour: Red, Green. LED colour: Green, Yellow, Red. PB's with 2 NO contacts suitable for 24V DC with minimum contact rating of 300mA. LED's suitable for 24 V DC. Connection with Plug-in connector, Module colour RAL 7035.	15	30
5.	PB module with 2 PB and 2 LEDs. Size 48x24 mm. Button colour: All Red. LED colour: All Red. PB's with 2 NO contacts suitable for 24V DC with minimum contact rating of 300mA. LED's suitable for 24 V DC. Connection with Plug-in connector, Module colour RAL 7035.	03	06
6.	PB module with 2 PB and 2 LEDs. Size 48x24 mm. Button colour: Red, Green. LED colour: Green, Red. PB's with 2 NO contacts suitable for 24V DC with minimum contact rating of 300mA. LED's suitable for 24 V DC. Connection with Plug-in connector, Module colour RAL 7035.	05	10
7.	PB module with 2 PB and 2 LEDs. Size 48x24 mm. Button colour: All Green. LED colour: All Red. PB's with 2 NO contacts suitable for 24V DC with minimum contact rating of 300mA. LED's suitable for 24 V DC. Connection with Plug-in connector, Module colour RAL 7035.	01	02
8.	PB module with 2 PB and 2 LEDs. Size 48x24 mm. Button colour: All Grey. LED colour: All Yellow. PB's with 2 NO contacts suitable for 24V DC with minimum contact rating of 300mA. LED's suitable for 24 V DC. Connection with Plug-in connector, Module colour RAL 7035.	02	04
9.	PB module with 2 PB and 0 LEDs. Size 48x24 mm. Button colour: All Grey. PB's with 2 NO contacts suitable for 24V DC with minimum contact rating of 300mA. Connection with Plug-in connector, Module colour RAL 7035.	04	08

COPY RIGHT AND CONFIDENTIAL
THE INFORMATION ON THIS DOCUMENT IS THE PROPERTY OF BHARAT HEAVY ELECTRICALS LIMITED. IT MUST NOT BE USED DIRECTLY OR INDIRECTLY IN ANY WAY DETRIMENTAL TO THE INTEREST OF THE COMPANY.

Sr. No	DESCRIPTION	QUANTITY /UNIT	TOTAL QUANTITY
10.	Recessed PB module. PB colour: Grey. Size: 48x24 mm. PB's with 2 NO contacts suitable for 24V DC with minimum contact rating of 300mA. Connection with Plug-in connector. Module colour RAL 7035.	04	08
11.	1 LED Symbol module. Size 48x24 mm. LED colour: Red Located in the center of module. LED's suitable for 24V DC. Connection with Plug-in connector, Module colour RAL 7035.	01	02
12.	2 LED signal module. Size: 48x24 mm. LED colour: All Yellow. LEDs suitable for 24V DC. Connection with rear Plug-in connector. Module colour RAL 7035.	07	14
13.	Selector Switch. 2 position. Size: 48x24 mm. Module colour RAL 7035. Configuration: 2 pole 2 position stay put. Minimum Contacts rating: 24V DC, 10A.	01	02
14.	Key operated Switch. 3 position. Size: 48x24 mm. Module colour RAL 7035. Configuration: 3 pole 3 position stay put with center OFF. Key removable in OFF position. Minimum Contacts rating: 24V DC, 10A	01	02
15.	Key operated Switch. 2 positions. Size: 48x24 mm. Module colour RAL 7035. Configuration: 2 pole 2 position stay put. Key removable in both positions. Minimum Contacts rating: 24V DC, 10A.	02	04
16.	Plug-in connectors suitable for above modules. [If connectors are different for different type of items, actual quantity of each type of connector shall be accordingly split and quoted].	As required	As required
17.	Blank tiles Size: 48x24 mm. Module colour RAL 7035.	As required [160 number minimum]	As required [320 number minimum]
18.	Blank modules with engravings as per drawings. Size: 48x24 mm. Module colour RAL 7035.	As required	As required
19.	Mosaic Grid along with frame to house the above items 21 rows of 24 mm and 15 columns of 48 mm. Module colour RAL 7035	01	02
20.	Crimping tool for mosaic items for making connections. [To be supplied loose].	01	02
21.	Removal tool for mosaic items from mosaic items. [To be supplied loose].	01	02

COPY RIGHT AND CONFIDENTIAL
THE INFORMATION ON THIS DOCUMENT IS THE PROPERTY OF BHARAT HEAVY ELECTRICALS LIMITED. IT MUST NOT BE USED DIRECTLY OR INDIRECTLY IN ANY WAY DETRIMENTAL TO THE INTEREST OF THE COMPANY.

Sr. No	DESCRIPTION	QUANTITY /UNIT	TOTAL QUANTITY
22.	Digital Display module. • 4 digits, Float decimal, with +/- sign. • Display colour: Green LED Seven segment display. • Mounting: Flush panel. • Power Supply: 24V DC+/- 10%. • Screw type connector. • Input- 4-20mA DC. • Accuracy: 1.0% of final value or better. • Size: 48 mm (W) x 24 mm (h). • Programmable type with push button provided on each Digital Display module. • Ranges as given below:	05	10

Digital Indicator service			Range
1.		GENERATOR MVAR	-600-0-600 MVAR
2.		EXCITER FILED CURRENT	0-200A
3.		GENERATOR FILED CURRENT	0-10KA
4.		EXCITER FILED VOLTAGE	0-300V
5.		GENERATOR AVR CHANNEL BALANCE VOLTAGE	-15-0-15V

COPY RIGHT AND CONFIDENTIAL
THE INFORMATION ON THIS DOCUMENT IS THE PROPERTY OF BHARAT HEAVY ELECTRICALS LIMITED. IT MUST NOT BE USED DIRECTLY OR INDIRECTLY IN ANY WAY DETRIMENTAL TO THE INTEREST OF THE COMPANY.

ANNEXURE - II
LIST OF ITEMS FOR CONTROL DESK SECTION FOR UNIT-1 & UNIT-2
CWD02 [SYNCHROSCOPE PLAQUE]

Sr. No	DESCRIPTION	QUANTITY /UNIT	TOTAL QUANTITY
1.	1 LED Symbol module. Size 48x24 mm. LED colour: Red Located in the center of module. LED's suitable for 24V DC. Connection with Plug-in connector, Module colour RAL 7035.	01	02
2.	1 LED Symbol module. Size 48x24 mm. LED colour: Green Located in the center of module. LED's suitable for 24V DC. Connection with Plug-in connector, Module colour RAL 7035.	01	02
3.	Moving coil Voltmeter. Scale: 0-150V. Input: 4-20mA DC Signal. Size: 72x72mm. Angle of deflection: 240 Degree. Suspension: Taut band /Jewel bearings. Accuracy class: ± 1.0% of full scale or better. Zero adjustment with screw on meter face. Bezel colour: Black. Dial Colour: White. Insulation test Voltage: 2KV for 1 minute. Minimum Protection class: IP22. Suitable for mounting on mosaic grid. Flush panel mounting type. Applicable standard: IS: 1248- 2003 (Revised) or equivalent.	02	04
4.	Moving coil Frequency Meter Scale: 45-55 Hz. Input: 4-20mA DC Signal. Size: 72x72mm. Angle of deflection: 240 Degree. Suspension: Taut band /Jewel bearings. Accuracy class: ± 1.0% of full scale or better. Zero adjustment with screw on meter face. Bezel colour: Black. Dial Colour: White. Insulation test Voltage: 2KV for 1 minute. Minimum Protection class: IP22. Suitable for mounting on mosaic grid. Flush panel mounting type. Applicable standard: IS: 1248- 2003 (Revised) or equivalent.	02	04
5.	Synchroscope Rotating Iron. Size: 96x96 mm. Dial: Radial arc approx. 360 Degree. Accuracy class: 0.5 or better. Bezel colour: Black. Dial Colour: White. Synch Voltage: 110V ± 2%. Synch frequency: 45-55Hz ± 2%. Built in led for dark at synchronism is required. Indication: moving pointer & LED. Insulation test Voltage: 2KV for 1 minute. Minimum Protection class: IP22. Suitable for mounting on mosaic grid. Flush panel mounting type. Applicable standard: IS: 1248- 2003 (Revised) or equivalent.	01	02
6.	Mimic and Engraving on Blank Tiles of size 48x48mm or 48x24mm as per drawing.	1 Lot [As per drg]	1 Lot [As per drg]
7.	Blank modules as per drawing. Size: 48x24 mm / 48x48mm. Module colour RAL 7035.	As required	As required
8.	Mosaic Grid along with frame to house the above items 22 rows of 24 mm and 12 columns of 48 mm Module colour RAL 7035	01	02

COPY RIGHT AND CONFIDENTIAL
THE INFORMATION ON THIS DOCUMENT IS THE PROPERTY OF BHARAT HEAVY ELECTRICALS LIMITED. IT MUST NOT BE USED DIRECTLY OR INDIRECTLY IN ANY WAY DETRIMENTAL TO THE INTEREST OF THE COMPANY.

Sr. No	DESCRIPTION [INSIDE MOUNTED ITEMS]	QUANTITY /UNIT	TOTAL QUANTITY
1.	Crimp contacts suitable for inserting into connectors for wiring	As required	As required
2.	Cage clamp 8level TBs with 2 input and 2 outputs with shorting links and accessories	As required +20% spare	As required +20% spare
3.	Clip-on TB 10 sqmm with accessories.	As required +20% spare	As required +20% spare
4.	Disconnecting & testing type clip-on terminal CATDM4 / CLTDM4 sqmm with accessories.	As required +20% spare	As required +20% spare
5.	Door switches.	02	04
6.	LED Lamp.	02	04
7.	Fuse 4A with fuse base.	01	02
8.	HRC Link.	01	02
9.	Power socket 5/15A.	01	02
10.	Miniature Ckt. Breaker. 230/400 VAC, Double pole 6A.C-characteristic	01	02

NOTES:

1. Orientation of LEDs are as per console layout drawing.
2. Inscriptions on the mosaic tiles shall be provided as per final approved Layout drawing.
3. Inscriptions/colour shade etc on the Mimics, shall be as per approved Layout drawings.
4. Internally mounted items and their quantities will be as per requirement in final approved layout.
5. Internally mounted items & their quantities are subjected to change, based on the final approved schematic diagram.
6. Total no. of connections will be approximately:
   CWD02: 1100 connections.
10. Electrical measuring instruments (mosaic compatible) shall be procured from following suppliers:
    - AUTOMATIC ELECTRIC LTD., Mumbai.
    - MECO INSTRUMENTS PRIVATE LTD. Navi Mumbai.
    - RISHABH INSTRUMENTS LIMITED, Nashik.
11. Synchroscope shall be from one of the following sources:
    - AUTOMATIC ELECTRIC LTD., Mumbai.
    - Alstom, Chennai.
    - Reyrolle, UK.
    - ABB, Germany.

COPY RIGHT AND CONFIDENTIAL
THE INFORMATION ON THIS DOCUMENT IS THE PROPERTY OF BHARAT HEAVY ELECTRICALS LIMITED. IT MUST NOT BE USED DIRECTLY OR INDIRECTLY IN ANY WAY DETRIMENTAL TO THE INTEREST OF THE COMPANY.

12. Cage & clamp type TBs shall be procured from following suppliers:

Sr. No.	Supplier	Country/Place
1.	Weidmuller	Germany
2.	Phoenix	Germany/India
3.	Wago	Germany/India
4.	Elmex	Vadodara
5.	Connectwell	Mumbai

13. 1.1 KV Control Cables (PVC, FRLS Type) shall be procured from following suppliers:

Sr. No.	Supplier	Country/Place
1.	Advance Cable	Bengaluru
2.	Apar Industries Ltd	Umbergaon
3.	Cords Cables	Bhiwadi
4.	CMI	Faridabad
5.	CMI	Baddi
6.	Delton Cables Ltd.	Faridabad
7.	Elkay Telelink	Faridabad
8.	Gemscabs Industries	Bhiwadi
9.	Goyoline Fibres (I) Ltd	Daman
10.	Gupta Power Cables	Khurdha
11.	Havells India Ltd.	Alwar
12.	KEC International	Silvassa , Mysore
13.	KEI Industries Ltd.	Bhiwadi
14.	Paramount Cables	Khushkhera
15.	Polycab Wires Pvt. Ltd.	Daman
16.	Ravin Cables	Pune
17.	Special Cables	Rudrapur
18.	Suyog Cables	Vadodara
19.	ThermoCables	Hyderabad
20.	Tirupati Plastomatics	Jaipur
21.	Torrent Cable Ltd	Nadiad
22.	Universal Cable	Satna

Note: The above listed vendors are subject to customer approval.

COPY RIGHT AND CONFIDENTIAL
THE INFORMATION ON THIS DOCUMENT IS THE PROPERTY OF BHARAT HEAVY ELECTRICALS LIMITED. IT MUST NOT BE USED DIRECTLY OR INDIRECTLY IN ANY WAY DETRIMENTAL TO THE INTEREST OF THE COMPANY.

ANNEXURE - III
LIST OF MANDATORY SPARES [Common for U#1&2]

Sr. No	DESCRIPTION	TOTAL QUANTITY
1.	Console mounted mosaic devices. [PB&LED modules-to be classified based on LED/PB colour, LED modules-to be classified based on LED colour, Emergency PB, Recessed PBs, Digital Indicator, Analog Indicators, Switches (all varieties to be individually listed), Voltmeters, Frequency Meters, Synchroscope, etc.]	10% of each type subject to max. 5 nos. of each type.
2.	Blank Tiles	10 Numbers
3.	Boiler and Turbine trip pushbuttons	2 nos. of each type and rating.

NOTE:

1. The required mandatory spares as per contract are as above. [% to calculated based on total quantity of all the 02 units]

2. Detailed list in subsequent sheets is subject to approval by customer & will be based on final approved layouts.

3. Type number/ model number/ Make of all the mandatory spares shall be identical to items mounted on each drawout console.

4. All the mandatory spares shall be new.

5. All the mandatory spares should be replaceable with items mounted on each drawout console.

6. Spares shall not be dispatched before dispatch of corresponding main supply equipments.

COPY RIGHT AND CONFIDENTIAL

THE INFORMATION ON THIS DOCUMENT IS THE PROPERTY OF BHARAT HEAVY ELECTRICALS LIMITED. IT MUST NOT BE USED DIRECTLY OR INDIRECTLY IN ANY WAY DETRIMENTAL TO THE INTEREST OF THE COMPANY.

[LIST OF MANDATORY SPARES -DETAILED LIST]

Sr. No	DESCRIPTION	TOTAL QUANTITY NUMBERS
1.	Emergency OFF PB with red colour protective cover. Size: 48x48 mm. Contacts: 4 Changeover suitable for 24V DC with minimum contact rating of 02 Amperes. Connection with Plug-in connector. Module colour RAL 7035.	01
2.	Recessed PB module. PB colour: Grey. Size: 48x24 mm. Contacts: 2 NO. Suitable for 24V DC with minimum contact rating of 300mA. Connection with Plug-in connector. Module colour RAL 7035.	03
3.	PB module with 2 PB and 3 LEDs. Size 48x24 mm. Button colour: Red, Green. LED colour: Green, Yellow, Red. PB's with 2 NO contacts suitable for 24V DC with minimum contact rating of 300mA. LED's suitable for 24 V DC. Connection with Plug-in connector. Module colour RAL 7035.	05
4.	PB module with 1 PB and 2 LEDs. Size 48x24 mm. Button colour: Red. LED colour: Green, Red. PB's with 2 NO contacts suitable for 24V DC with minimum contact rating of 300mA. LED's suitable for 24 V DC. Connection with Plug-in connector. Module colour RAL 7035.	04
5.	4 LED signal module. LED colour: column 1 -Red, column 2- Green. Size: 48x24 mm. LEDs suitable for 24V DC. Connection with rear Plug-in connector. Module colour RAL 7035.	02
6.	2 LED signal module. LED colour: All Red. Size: 48x24 mm. LEDs suitable for 24V DC. Connection with rear Plug-in connector. Module colour RAL 7035.	01
7.	2 LED signal module. LED colour: Red, Green. Size: 48x24 mm. LEDs suitable for 24V DC. Connection with rear Plug-in connector. Module colour RAL 7035.	01
8.	3 LED signal module. LED colour: All Red. Size: 48x24 mm. LEDs suitable for 24V DC. Connection with rear Plug-in connector. Module colour RAL 7035.	01
9.	Key operated Switch. 2 positions. Size: 48x24 mm. Module colour RAL 7035. Configuration: 2 pole 2 position stay put. Key removable in position-01 only. Contacts rating: 24V DC, 10A.	01
10.	PB module with 3 PB and 4 LEDs. Size 48x24 mm. Button colour: Red, Grey, Green. LED colour: Green, Yellow, Blue, Red. PB's with 2 NO contacts suitable for 24V DC with minimum contact rating of 300mA. LED's suitable for 24 V DC. Connection with Plug-in connector, Module colour RAL 7035.	02
11.	PB module with 3 PB and 3 LEDs. Size 48x24 mm. Button colour: All Grey. LED colour: All Red. PB's with 2 NO contacts suitable for 24V DC with minimum contact rating of 300mA. LED's suitable for 24 V DC. Connection with Plug-in connector, Module colour RAL 7035.	01
12.	PB module with 2 PB and 4 LEDs. Size 48x24 mm. Button colour: Red, Green. LED colour: Green, Yellow, Blue, Red. PB's with 2 NO contacts suitable for 24V DC with minimum contact rating of 300mA. LED's suitable for 24 V DC. Connection with Plug-in connector, Module colour RAL 7035.	05

COPY RIGHT AND CONFIDENTIAL
THE INFORMATION ON THIS DOCUMENT IS THE PROPERTY OF BHARAT HEAVY ELECTRICALS LIMITED. IT MUST NOT BE USED DIRECTLY OR INDIRECTLY IN ANY WAY DETRIMENTAL TO THE INTEREST OF THE COMPANY.

Sr. No	DESCRIPTION	TOTAL QUANTITY NUMBERS
13.	PB module with 2 PB and 2 LEDs. Size 48x24 mm. Button colour: All Red. LED colour: All Red. PB's with 2 NO contacts suitable for 24V DC with minimum contact rating of 300mA. LED's suitable for 24 V DC. Connection with Plug-in connector, Module colour RAL 7035.	01
14.	PB module with 2 PB and 2 LEDs. Size 48x24 mm. Button colour: Red, Green. LED colour: Green, Red. PB's with 2 NO contacts suitable for 24V DC with minimum contact rating of 300mA. LED's suitable for 24 V DC. Connection with Plug-in connector, Module colour RAL 7035.	01
15.	PB module with 2 PB and 2 LEDs. Size 48x24 mm. Button colour: All Green. LED colour: All Red. PB's with 2 NO contacts suitable for 24V DC with minimum contact rating of 300mA. LED's suitable for 24 V DC. Connection with Plug-in connector, Module colour RAL 7035.	01
16.	PB module with 2 PB and 2 LEDs. Size 48x24 mm. Button colour: All Grey. LED colour: All Yellow. PB's with 2 NO contacts suitable for 24V DC with minimum contact rating of 300mA. LED's suitable for 24 V DC. Connection with Plug-in connector, Module colour RAL 7035.	01
17.	PB module with 2 PB and 0 LEDs. Size 48x24 mm. Button colour: All Grey. PB's with 2 NO contacts suitable for 24V DC with minimum contact rating of 300mA. Connection with Plug-in connector, Module colour RAL 7035.	01
18.	1 LED Symbol module. Size 48x24 mm. LED colour: Red Located in the center of module. LED's suitable for 24V DC. Connection with Plug-in connector, Module colour RAL 7035.	01
19.	1 LED Symbol module. Size 48x24 mm. LED colour: Green Located in the center of module. LED's suitable for 24V DC. Connection with Plug-in connector, Module colour RAL 7035.	01
20.	2 LED signal module. Size: 48x24 mm. LED colour: All Yellow. LEDs suitable for 24V DC. Connection with rear Plug-in connector. Module colour RAL 7035.	02
21.	Selector Switch. 2 position. Size: 48x24 mm. Module colour RAL 7035. Configuration: 2 pole 2 position stay put. Minimum Contacts rating: 24V DC, 1A.	01
22.	Key operated Switch. 3 position. Size: 48x24 mm. Module colour RAL 7035. Configuration: 2 pole 3 position stay put with center OFF. Key removable in OFF position. Minimum Contacts rating: 24V DC, 1A.	01
23.	Key operated Switch. 2 positions. Size: 48x24 mm. Module colour RAL 7035. Configuration: 2 pole 2 position stay put. Key removable in both positions. Minimum Contacts rating: 24V DC, 1A.	01
24.	PB module with 1 PB and 0 LEDs. Size 48X24 mm. Button colour: Red. PB's with 2 NO contacts suitable for 24V DC with minimum contact rating of 300mA. Connection with Plug-in connector, Module colour RAL 7035.	05

COPY RIGHT AND CONFIDENTIAL
THE INFORMATION ON THIS DOCUMENT IS THE PROPERTY OF BHARAT HEAVY ELECTRICALS LIMITED. IT MUST NOT BE USED DIRECTLY OR INDIRECTLY IN ANY WAY DETRIMENTAL TO THE INTEREST OF THE COMPANY.

Sr. No	DESCRIPTION	TOTAL QUANTITY NUMBERS
25.	Moving coil Voltmeter. Scale: 0-150V. Input: 4-20mA DC Signal. Size: 72x72mm. Angle of deflection: 240 Degree. Suspension: Taut band /Jewel bearings. Accuracy class: ± 1.5% of full scale or better. Zero adjustment with screw on meter face. Bezel colour: Black. Dial Colour: White. Insulation test Voltage: 2KV for 1 minute. Minimum Protection class: IP22. Suitable for mounting on mosaic grid. Flush panel mounting type. Applicable standard: IS: 1248- 2003 (Revised) or equivalent.	01
26.	Moving coil Frequency Meter Scale: 45-55 Hz. Input: 4-20mA DC Signal. Size: 72x72mm. Angle of deflection: 240 Degree. Suspension: Taut band /Jewel bearings. Accuracy class: ± 1.5% of full scale or better. Zero adjustment with screw on meter face. Bezel colour: Black. Dial Colour: White. Insulation test Voltage: 2KV for 1 minute. Minimum Protection class: IP22. Suitable for mounting on mosaic grid. Flush panel mounting type. Applicable standard: IS: 1248- 2003 (Revised) or equivalent.	01
27.	Synchroscope Rotating Iron. Size: 96x96 mm. Dial: Radial arc approx. 360 Degree. Accuracy class: 0.5 or better. Bezel colour: Black. Dial Colour: White. Synch Voltage: 110V ± 2%. Synch frequency: 45-55Hz ± 2%. Built in led for dark at synchronism is required. Indication: moving pointer & LED. Insulation test Voltage: 2KV for 1 minute. Minimum Protection class: IP22. Suitable for mounting on mosaic grid. Flush panel mounting type. Applicable standard: IS: 1248- 2003 (Revised) or equivalent.	01
28.	Digital Display module. • 4 digit, Float decimal, with +/- sign. • Display colour: Red LED Seven segment display. • Mounting: Flush panel. • Power Supply: 24V DC+/- 10%. • Screw type connector. • Input- 4-20mA DC. • Accuracy: 1.5% of final value or better. • Size: 48 mm (W) x 24 mm (h). • Programmable type with push button provided on each Digital Display module.	06

Digital Indicator service		Range
1.	GENERATOR MVAR	-600-0-600 MVAR
2.	FEED WATER FLOW	0-3000 TPH
3.	EXCITER FILED VOLTAGE	0-300V
4.	GENERATOR FILED CURRENT	0-10KA
5.	JOP TDBFP-B PRESSURE	0-150 Kg/Cm2
6.	TURBINE SPEED	3600 RPM

COPY RIGHT AND CONFIDENTIAL
THE INFORMATION ON THIS DOCUMENT IS THE PROPERTY OF BHARAT HEAVY ELECTRICALS LIMITED. IT MUST NOT BE USED DIRECTLY OR INDIRECTLY IN ANY WAY DETRIMENTAL TO THE INTEREST OF THE COMPANY.

Sr. No	DESCRIPTION	TOTAL QUANTITY
29.	**BOILER TRIP EMERGENCY PUSH BUTTONS**	02

DESCRIPTION	MODEL NO.	QTY
NON-ILLUMINATED HEAD	E2-40/03	02
COUPLING FOR NON-ILLUMINATED HEAD	RMF-02	02
CONTACT ELEMENT - 1NC	CLP101 S/EMB/BULA CONTACT BLOCK	12
ENCLOSURE BOX	ENCLOSURE BOX (80X82X85) BOPLA-T 225	02
EMERGENCY STOP SIGNS	MDP-8	02

30.	**TURBINE TRIP EMERGENCY PUSH BUTTONS**	02

DESCRIPTION	MODEL NO.	TOTAL QTY
EMERGENCY STOP BUTTON	EDRR 40RT	2
MOUNTING BOX FOR CONTROL DEVICE	MBGH 311GB	2
CONTACT ELEMENT 2NC	EF220.1	2
CONTACT ELEMENT 1NO+1NC	EF303.1	2
SPRING ELEMENT MODULE	EFR	2
EMERGENCY STOP SIGNS	MDP-8	2

31.	Blank tiles. Size: 48x24 mm. Module colour RAL 7035.	10
32.	Blank tiles. Size: 48x48 mm. Module colour RAL 7035.	10

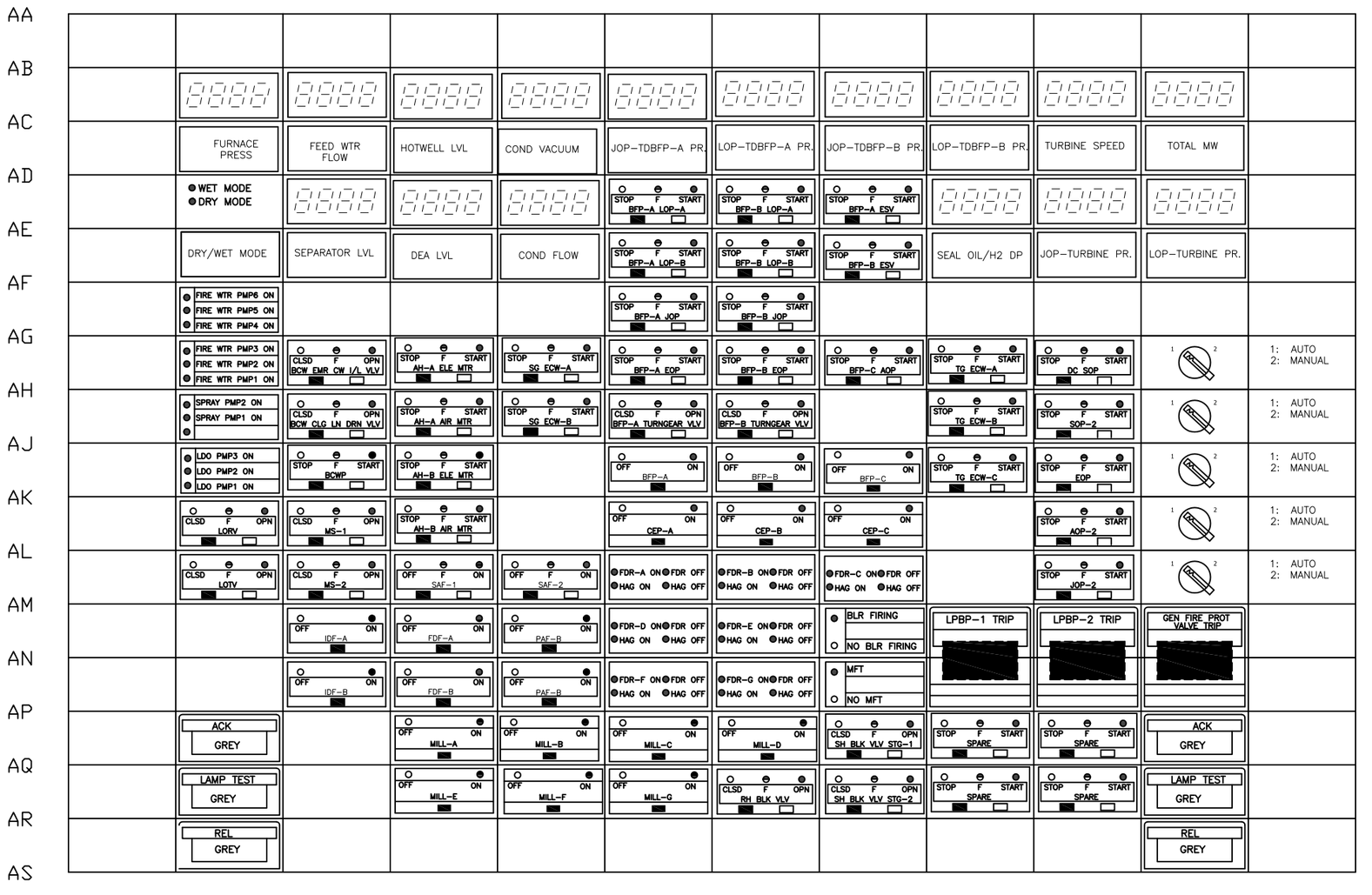

LIST OF INDICATORS ON UCD	
SL.NO.	SERVICE
1	FURNACE PRESSURE
2	SEPARATOR LEVEL
3	DEA LEVEL
4	SEAL OIL/H2 DP
5	FEED WTR FLOW
6	COND FLOW
7	TOTAL MW
8	HOTWELL LVL
9	COND. VACUUM
10	JOP-TURBINE
11	LOP-TURBINE
12	TURBINE SPEED
13	JOP TDBFP-A PR.
14	JOP TDBFP-B PR.

LIST OF INDICATORS ON UCD	
SL.NO.	SERVICE
15	LOP TDBFP-A PR.
16	LOP TDBFP-B PR.

LEGEND:

- LED GREEN
- LED YELLOW
- LED RED
- PUSH BUTTON GREEN
- PUSH BUTTON RED

1 PB + 4LED

2 PB + 4LED

2 PB + 2LED

2 PB + 3LED

3 PB + 3LED

2 PB

6 LED

4 LED

2 LED

3 LED

KEY SELECTOR SWITCH
(STAYPUT TYPE) KEY REMOVABLE IN 1 POSITION

DIGITAL DISPLAY SCREEN GREEN
SEVEN SEGMENT LED DISPLAY

BLANK TILE

EMERGENCY OFF PB RED WITH PROTECTIVE FLAP

RECESSED PB GREY

1. OVERALL DIMENSIONS 384 mm (H) X 576 mm (W) WITH EACH TILE OF SIZE 48 mm X 24 mm
2. DIMENSIONS ARE INDICATIVE AND SUBJECT TO CHANGE BASED ON SUPPLIER OF MOSAIC TILES
3. EMERGENCY PUSH BUTTONS SHALL BE MOUNTED ON THE TOP OF CONTROL DESK FOR THE FOLLOWING:
   A. TURBINE TRIP EMERGENCY PUSH BUTTON(01 no.)
   B. BOILER TRIP EMERGENCY PUSH BUTTON(02 nos.)
   C. OIL & FIRE PROT TRIP(01 no.) .
4. PLEASE REFER THE FOLLOWING DRG. FOR ECD :-"FRONT VIEW OF ELECTRICAL CONTROL PANEL(ECD)# 1&2 DRG. NO. 4540-001-110-PVE-B-053"
5. THIS LAYOUT IS APPLICABLE FOR BOTH UNIT-1&2.

NTPC DRAWING NO: 4540-001-405-PVI-B-151

CUSTOMER: एन टी पी सी NTPC — NTPC Limited (A GOVERNMENT OF INDIA ENTERPRISE)

PROJECT: 2X660MW TALCHER THERMAL POWER PROJECT LTD. STAGE-III

JOB NO. : 497

STATUS : CONTRACT

REV	DATE	ALTD	CHD	APPD
01	05.06.23	VKV	SSB	SSB
1.	REVISED IN LINE WITH NTPC COMMENTS			

BHARAT HEAVY ELECTRICALS LTD
POWER SECTOR
PROJECT ENGINEERING MANAGEMENT
NOIDA

DEPT CODE		NAME	SIGN	DATE
I	DESN	VKV	-sd-	05.06.2023
	CHD	SSB	-sd-	05.06.2023
	APPD	SSB	-sd-	05.06.2023

TITLE: UNIT CONTROL DESK (UCD) LAYOUT

MAX	ELEC.	MSE	CIVIL	C&I	–	DEPT.	SCALE 1:500
						SIGN	
						DATE	

DRAWING NO. PE-DG-497-145-I407

SHEET 1 OF 1 REV. 01

FIRST ANGLE PROJECTION ALL DIMENSIONS ARE IN MM

DRAWING NO. PE-DG-497-510-E112

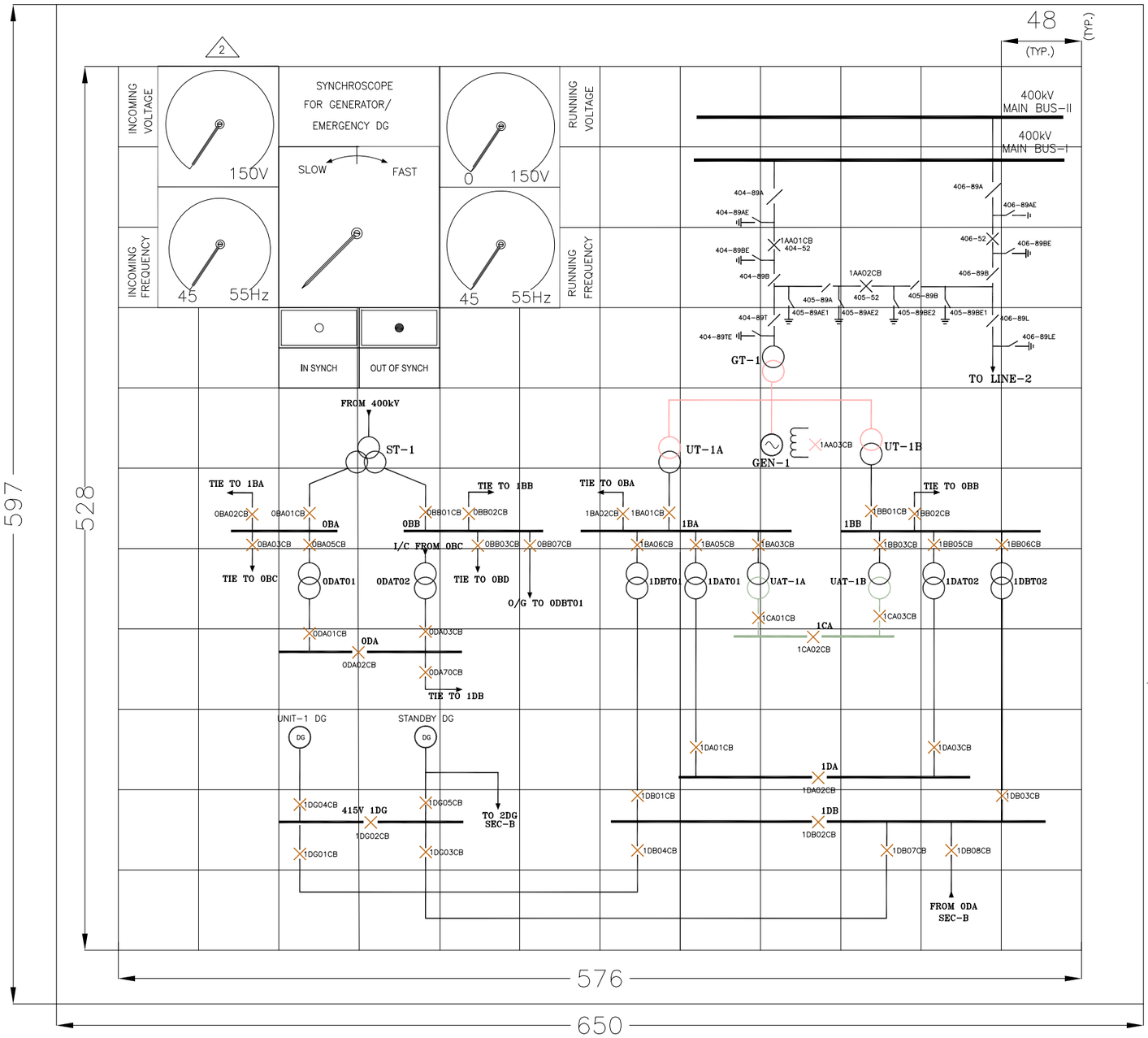

FOR UNIT-1

LEGEND

- ○ GREEN LED
- ● RED LED
- × BREAKER
- / ISOLATOR

MIMIC COLOUR SHADES

400KV-SHADE NO.537 OF IS:5 (SIGNAL RED)
21KV-SHADE NO.220 OF IS:5 (OLIVE GREEN)
11KV-SHADE NO.217 OF IS:5 (SEA GREEN)
3.3 KV-SHADE NO.101 OF IS:5 (SKY BLUE)
415V-SHADE NO.796 OF IS:5 (DARK VOILET)
GENERATOR FIELD WINDING: BLACK

REFERENCE DRAWIMGS

1 ELECTRICAL SINGLE LINE DIAGRAM FOR AUXILIARY POWER DISTRIBUTION, DRG. NO. PE-DG-497-565-E001(NTPC DRG.NO. 4540-001-299-PVE-P-058)

2 LIST OF CIRCUIT BREAKERS FOR ELECTRICAL SYSTEM AND THEIR CONTROL LOCATION DRG. NO. PE-DC-497-510-E101 (NTPC DRG NO. 4540-001-110-PVE-H-009).

3 400kV SWITCHYARD SINGLE LINE DIAGRAM NTPC DRG.NO: 4540-001-230-PVE-P-001

NOTES

1. THE COLOUR OF MIMIC FOR TRANSFORMER WINDINGS SHALL BE AS PER COLOUR CODE AS SPECIFIED ABOVE CORRESPONDING TO THE VOLTAGE OF THE WINDING
2. THE MIMIC WILL BE PRINTED ON 48 X 48 MM SIZE MOSAIC TILES & MOSAIC TILE SIZE SHALL BE 48X24 ON DRAW OUT PORTION.
3. THE TEXT WILL BE PRINTED IN BLACK COLOUR [LETTER SIZE: 4MM, TEXT STYLE: ARIAL NARROW]
4. DIMENSIONS ARE INDICATIVE AND SUBJECT TO CHANGE BASED ON SUPPLIER OF MOSAIC ITEMS.
5. EARTH SWITCH SHALL BE PRINTED IN BLACK.

We confirm that this document meets all the contract requirements including safety and statuary requirements and facilitate ease of operation and maintenance. In case any deviation is found, the Contractor shall carry out all required changes/ modifications without any cost implications to NTPC. In addition, Penalty on account of noncompliance of contract specification as deemed fit by the Employer shall be recovered.

REV.	DATE	ALTD	CHD	APPD
02	25.10.23	SrM	AS	SL
1.	REVISED IN LINE WITH NTPC OBSERVATIONS ON ECD & ASSOCIATED LOGICS.			
01	17.06.23	SrM	AS	SL
1.	REVISED IN LINE WITH BHEL REPLIES DTD 17.06.23.			

JOB NO. 497
STATUS CONTRACT
DISTRIBUTION
TO
No. OF

NTPC DRG. No. 4540-001-110-PVE-B-053

OWNER: एन टी पी सी लिमिटेड N T P C LIMITED

PROJECT: 2 X 660 MW TALCHER THERMAL POWER PLANT, STAGE III

बी एच ई एल BHEL: BHARAT HEAVY ELECTRICALS LTD POWER SECTOR PROJECT ENGINEERING MANAGEMENT NOIDA

DEPT CODE		NAME	SIGN	DATE
E	DRN	SrM	-sd-	16.06.23
	DESN	SrM	-sd-	16.06.23
	CHD	AS	-sd-	16.06.23
	APPD	SL	-sd-	16.06.23

TITLE
FRONT VIEW OF ELECTRICAL CONTROL PANEL (ECD) #1 & 2

DEPT. SCALE
SIGN
DATE

DRAWING NO. PE-DG-497-510-E112
SHEET 01 OF 04 REV.02

FORMAT SIZE A3

COPY RIGHT AND CONFIDENTIAL
The information on this document is the property of BHARAT HEAVY ELECTRICALS LIMITED
it must not be used directly or indirectly in any way detrimental to the interest of the company.

FIRST ANGLE PROJECTION ALL DIMENSIONS ARE IN MM

DRAWING NO. PE-DG-497-510-E112

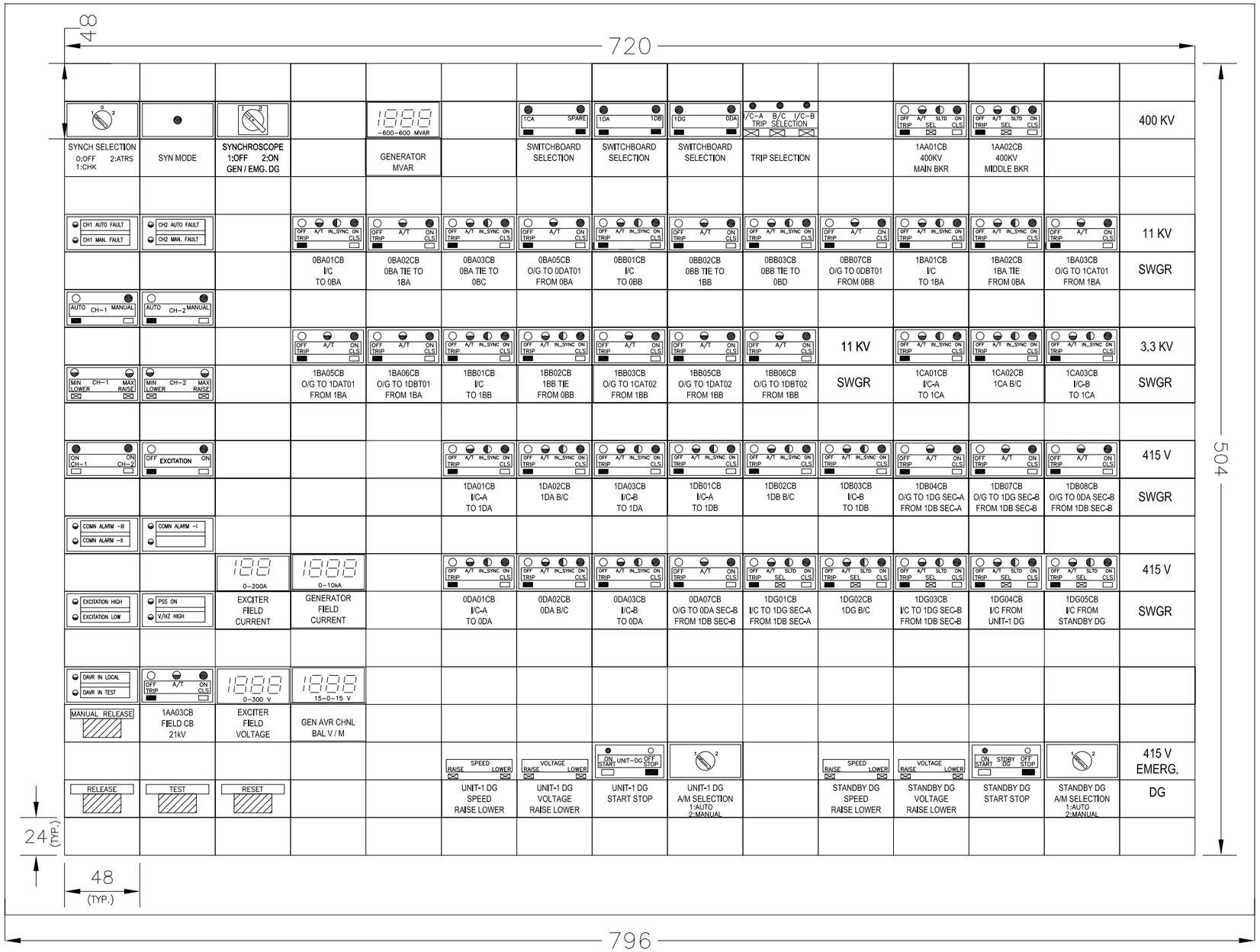

LEGEND

●	ROUND LED	LED COLOUR	: RED
◒	ROUND LED	LED COLOUR	: YELLOW
○	ROUND LED	LED COLOUR	: GREEN
◐	ROUND LED	LED COLOUR	: BLUE

PUSH BUTTON MODULE WITH LEDs	ON PUSH BUTTON COLOUR	: GREEN
	OFF PUSH BUTTON COLOUR	: RED
	ON LED COLOUR	: RED
	OFF LED COLOUR	: GREEN
PUSH BUTTON MODULE	START PUSH BUTTON COLOUR	: GREEN
	STOP PUSH BUTTON COLOUR	: RED
	START LED COLOUR	: RED
	STOP LED COLOUR	: GREEN
PUSH BUTTON MODULE WITH LEDs	CH-1 PUSH BUTTON COLOUR	: GREEN
	CH-2 PUSH BUTTON COLOUR	: GREEN
	CH-1 LED COLOUR	: RED
	CH-2 LED COLOUR	: RED
PUSH BUTTON MODULE	RAISE PUSH BUTTON COLOUR	: GREY
	LOWER PUSH BUTTON COLOUR	: GREY
PUSH BUTTON MODULE WITH LEDs	MANUAL PUSH BUTTON COLOUR	: GREEN
	AUTO PUSH BUTTON COLOUR	: RED
	MANUAL LED COLOUR	: RED
	AUTO LED COLOUR	: GREEN
PUSH BUTTON MODULE WITH LEDs	I/C-A PUSH BUTTON COLOUR	: GREY
	B/C PUSH BUTTON COLOUR	: GREY
	I/C-B PUSH BUTTON COLOUR	: GREY
	I/C-A LED COLOUR	: RED
	B/C LED COLOUR	: RED
	I/C-B LED COLOUR	: RED
PUSH BUTTON MODULE WITH LEDs	CLOSE PUSH BUTTON COLOUR	: GREEN
	SELECT PUSH BUTTON COLOUR	: GREY
	TRIP PUSH BUTTON COLOUR	: RED
	ON/CLOSE LED COLOUR	: RED
	IN-SYNC LED COLOUR	: BLUE
	AUTO TRIP LED COLOUR	: YELLOW
	OFF/TRIP LED COLOUR	: GREEN
PUSH BUTTON MODULE WITH LEDs	CLOSE PUSH BUTTON COLOUR	: GREEN
	TRIP PUSH BUTTON COLOUR	: RED
	ON/CLOSE LED COLOUR	: RED
	IN-SYNC LED COLOUR	: BLUE
	AUTO TRIP LED COLOUR	: YELLOW
	OFF/TRIP LED COLOUR	: GREEN
PUSH BUTTON MODULE WITH LEDs	CLOSE PUSH BUTTON COLOUR	: GREEN
	TRIP PUSH BUTTON COLOUR	: RED
	ON/CLOSE LED COLOUR	: RED
	AUTO TRIP LED COLOUR	: YELLOW
	OFF/TRIP LED COLOUR	: GREEN
PUSH BUTTON MODULE WITH LED	START PUSH BUTTON COLOUR	: GREEN
	STOP PUSH BUTTON COLOUR	: RED
	ON LED COLOUR	: RED
	OFF LED COLOUR	: GREEN
PUSH BUTTON MODULE	RAISE PUSH BUTTON COLOUR	: GREY
	LOWER PUSH BUTTON COLOUR	: GREY

KEY-OPERATED SELECTOR SWITCH MODULE FOR AUTO/ MANUAL SELECTION (LOCKABLE, STAYPUT TYPE WITH KEY REMOVABLE IN BOTH POSITIONS)	KNOB COLOUR	: GREY
KEY-OPERATED SELECTOR SWITCH MODULE FOR SYNC SELECTION (LOCKABLE, STAYPUT TYPE WITH KEY REMOVABLE IN OFF POSITION)	KNOB COLOUR	: GREY
DIGITAL DISPLAY MODULE		
SELECTOR SWITCH MODULE FOR SYNCHROSCOPE (STAY PUT, NON LOCKABLE)	KNOB COLOUR	: GREY
RECESSED PUSH BUTTON MODULE	PUSH BUTTON COLOUR	: GREY

REV.	DATE	ALTD	CHD	APPD
02	25.10.23	SrM	AS	SL
01	17.06.23	SrM	AS	SL

REV.	REMARKS
1.	REVISED IN LINE WITH NTPC OBSERVATIONS ON ECD & ASSOCIATED LOGICS.
1.	REVISED IN LINE WITH BHEL REPLIES DTD 17.06.23.

BHARAT HEAVY ELECTRICALS LTD
POWER SECTOR
PROJECT ENGINEERING MANAGEMENT
NOIDA

DEPT CODE: E

	NAME	SIGN	DATE
DRN	SrM	-sd-	16.06.23
DESN	SrM	-sd-	16.06.23
CHD	AS	-sd-	16.06.23
APPD	SL	-sd-	16.06.23

TITLE
FRONT VIEW OF ELECTRICAL CONTROL PANEL (ECD) #1 & 2

DEPT. SCALE
SIGN
DATE

DRAWING NO. PE-DG-497-510-E112

SHEET 02 OF 04 REV.02

FORMAT SIZE A3

FIRST ANGLE PROJECTION ALL DIMENSIONS ARE IN MM

DRAWING NO. PE-DG-497-510-E112

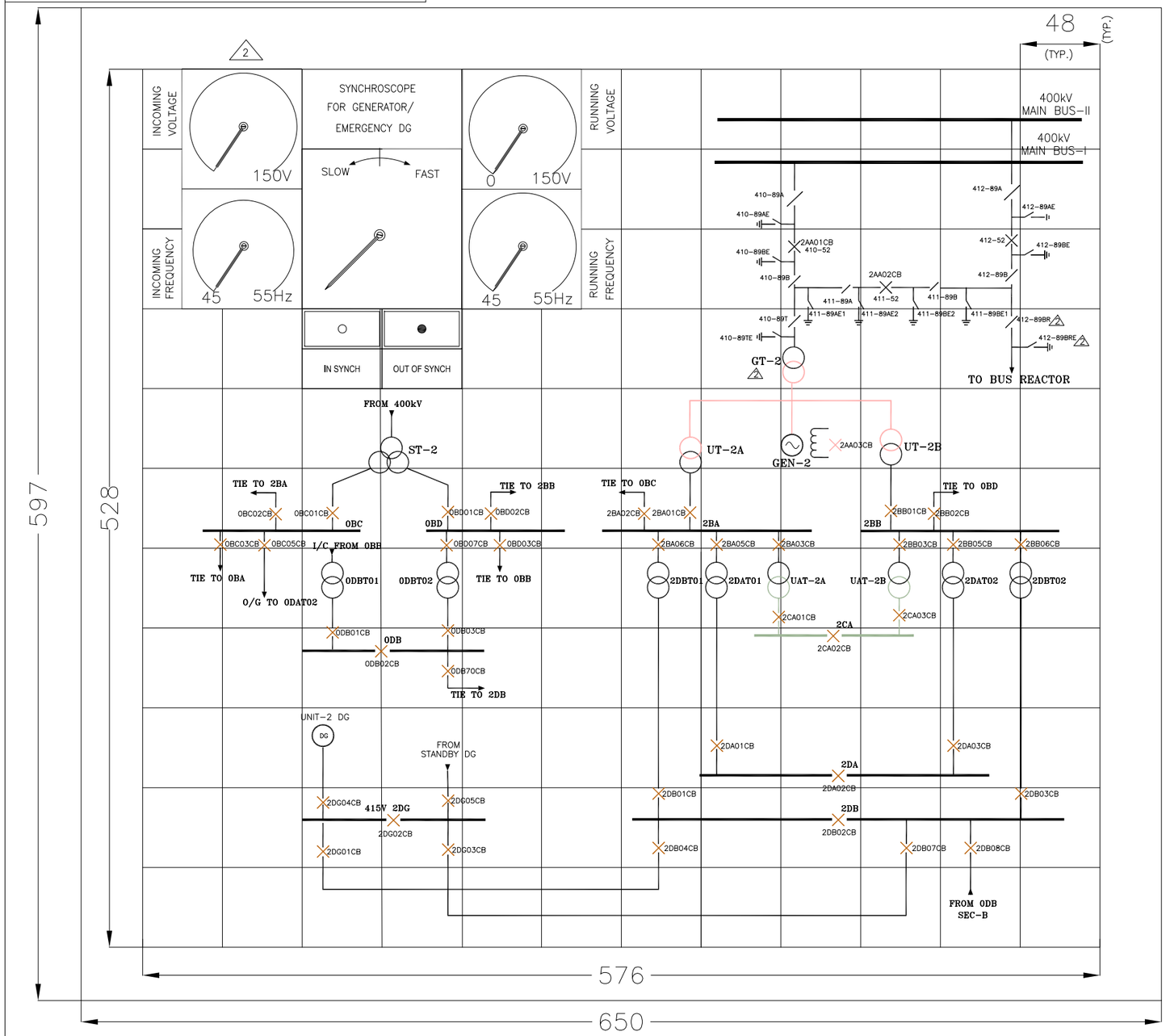

FOR UNIT-2

LEGEND

- ○ GREEN LED
- ● RED LED
- × BREAKER
- / ISOLATOR

MIMIC COLOUR SHADES

400KV-SHADE NO.537 OF IS:5 (SIGNAL RED)
21KV-SHADE NO.220 OF IS:5 (OLIVE GREEN)
11KV-SHADE NO.217 OF IS:5 (SEA GREEN)
3.3 KV-SHADE NO.101 OF IS:5 (SKY BLUE)
415V-SHADE NO.796 OF IS:5 (DARK VOILET)
GENERATOR FIELD WINDING: BLACK

REV.	DATE	ALTD	CHD	APPD	REV.	DATE	ALTD	CHD	APPD	REV.	DATE	ALTD	CHD	APPD
					02	25.10.23	SrM	AS	SL	01	17.06.23	SrM	AS	SL
					1.	REVISED IN LINE WITH NTPC OBSERVATIONS ON ECD & ASSOCIATED LOGICS.				1.	REVISED IN LINE WITH BHEL REPLIES DTD 17.06.23.			

BHARAT HEAVY ELECTRICALS LTD
POWER SECTOR
PROJECT ENGINEERING MANAGEMENT
NOIDA

DEPT CODE		NAME	SIGN	DATE
E	DRN	SrM	-sd-	16.06.23
	DESN	SrM	-sd-	16.06.23
	CHD	AS	-sd-	16.06.23
	APPD	SL	-sd-	16.06.23

TITLE
FRONT VIEW OF ELECTRICAL CONTROL PANEL (ECD) #1 & 2

DEPT. SIGN DATE

SCALE

DRAWING NO.
PE-DG-497-510-E112

SHEET 03 OF 04 REV.02

FORMAT SIZE A3

FIRST ANGLE PROJECTION ALL DIMENSIONS ARE IN MM

DRAWING NO. PE-DG-497-510-E112

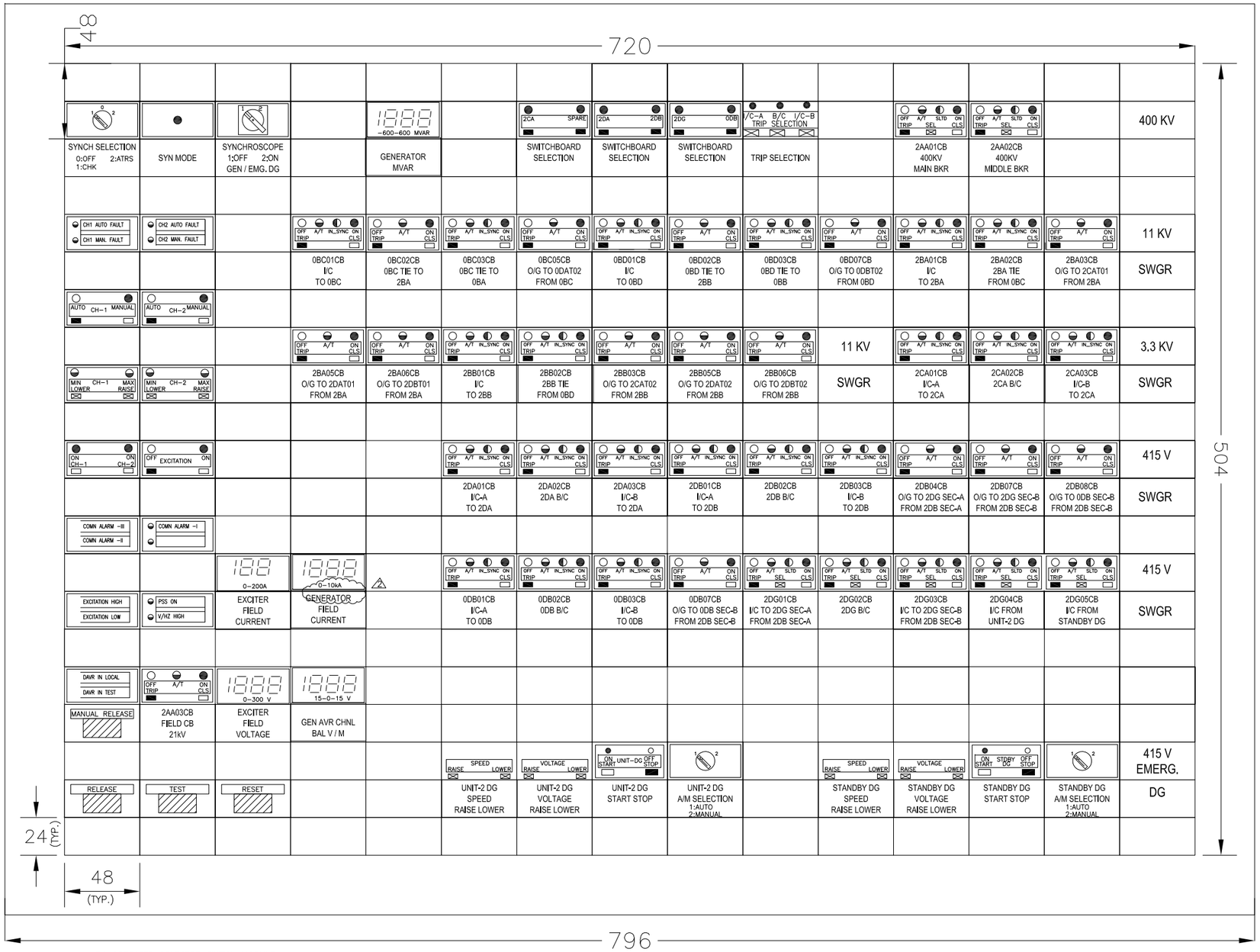

LEGEND

●	ROUND LED	LED COLOUR	: RED
◒	ROUND LED	LED COLOUR	: YELLOW
○	ROUND LED	LED COLOUR	: GREEN
◐	ROUND LED	LED COLOUR	: BLUE

	PUSH BUTTON MODULE WITH LEDs	ON PUSH BUTTON COLOUR	: GREEN
		OFF PUSH BUTTON COLOUR	: RED
		ON LED COLOUR	: RED
		OFF LED COLOUR	: GREEN
	PUSH BUTTON MODULE	START PUSH BUTTON COLOUR	: GREEN
		STOP PUSH BUTTON COLOUR	: RED
		START LED COLOUR	: RED
		STOP LED COLOUR	: GREEN
	PUSH BUTTON MODULE WITH LEDs	CH-1 PUSH BUTTON COLOUR	: GREEN
		CH-2 PUSH BUTTON COLOUR	: GREEN
		CH-1 LED COLOUR	: RED
		CH-2 LED COLOUR	: RED
	PUSH BUTTON MODULE	RAISE PUSH BUTTON COLOUR	: GREY
		LOWER PUSH BUTTON COLOUR	: GREY
	PUSH BUTTON MODULE WITH LEDs	MANUAL PUSH BUTTON COLOUR	: GREEN
		AUTO PUSH BUTTON COLOUR	: RED
		MANUAL LED COLOUR	: RED
		AUTO LED COLOUR	: GREEN
	PUSH BUTTON MODULE WITH LEDs	I/C-A PUSH BUTTON COLOUR	: GREY
		B/C PUSH BUTTON COLOUR	: GREY
		I/C-B PUSH BUTTON COLOUR	: GREY
		I/C-A LED COLOUR	: RED
		B/C LED COLOUR	: RED
		I/C-B LED COLOUR	: RED
	PUSH BUTTON MODULE WITH LEDs	CLOSE PUSH BUTTON COLOUR	: GREEN
		SELECT PUSH BUTTON COLOUR	: GREY
		TRIP PUSH BUTTON COLOUR	: RED
		ON/CLOSE LED COLOUR	: RED
		IN-SYNC LED COLOUR	: BLUE
		AUTO TRIP LED COLOUR	: YELLOW
		OFF/TRIP LED COLOUR	: GREEN
	PUSH BUTTON MODULE WITH LEDs	CLOSE PUSH BUTTON COLOUR	: GREEN
		TRIP PUSH BUTTON COLOUR	: RED
		ON/CLOSE LED COLOUR	: RED
		IN-SYNC LED COLOUR	: BLUE
		AUTO TRIP LED COLOUR	: YELLOW
		OFF/TRIP LED COLOUR	: GREEN
	PUSH BUTTON MODULE WITH LEDs	CLOSE PUSH BUTTON COLOUR	: GREEN
		TRIP PUSH BUTTON COLOUR	: RED
		ON/CLOSE LED COLOUR	: RED
		AUTO TRIP LED COLOUR	: YELLOW
		OFF/TRIP LED COLOUR	: GREEN
	PUSH BUTTON MODULE WITH LED	START PUSH BUTTON COLOUR	: GREEN
		STOP PUSH BUTTON COLOUR	: RED
		ON LED COLOUR	: RED
		OFF LED COLOUR	: GREEN
	PUSH BUTTON MODULE	RAISE PUSH BUTTON COLOUR	: GREY
		LOWER PUSH BUTTON COLOUR	: GREY

	KEY-OPERATED SELECTOR SWITCH MODULE FOR AUTO/ MANUAL SELECTION (LOCKABLE, STAYPUT TYPE WITH KEY REMOVABLE IN BOTH POSITIONS)	KNOB COLOUR	: GREY
	KEY-OPERATED SELECTOR SWITCH MODULE FOR SYNC SELECTION (LOCKABLE, STAYPUT TYPE WITH KEY REMOVABLE IN OFF POSITION)	KNOB COLOUR	: GREY
	DIGITAL DISPLAY MODULE		
	SELECTOR SWITCH MODULE FOR SYNCHROSCOPE (STAY PUT, NON LOCKABLE)	KNOB COLOUR	: GREY
	RECESSED PUSH BUTTON MODULE	PUSH BUTTON COLOUR	: GREY

REV.	DATE	ALTD	CHD	APPD
02	25.10.23	SrM	AS	SL
01	17.06.23	SrM	AS	SL

REV.		
1.	REVISED IN LINE WITH NTPC OBSERVATIONS ON ECD & ASSOCIATED LOGICS.	
1.	REVISED IN LINE WITH BHEL REPLIES DTD 17.06.23.	

BHARAT HEAVY ELECTRICALS LTD
POWER SECTOR
PROJECT ENGINEERING MANAGEMENT
NOIDA

DEPT CODE: E

	NAME	SIGN	DATE
DRN	SrM	-sd-	16.06.23
DESN	SrM	-sd-	16.06.23
CHD	AS	-sd-	16.06.23
APPD	SL	-sd-	16.06.23

TITLE
FRONT VIEW OF ELECTRICAL CONTROL PANEL (ECD) #1 & 2

DEPT. SCALE
SIGN
DATE

DRAWING NO. PE-DG-497-510-E112

SHEET 04 OF 04 REV.02

FORMAT SIZE A3

COPY RIGHT AND CONFIDENTIAL
THE INFORMATION ON THIS DOCUMENT IS THE PROPERTY OF BHARAT HEAVY ELECTRICALS LIMITED.
IT MUST NOT BE USED DIRECTLY OR INDIRECTLY IN ANY WAY DETRIMENTAL TO THE INTEREST OF THE COMPANY.

ANNEXURE-V

PURCHASE SPECIFICATIONS FOR TERMINATION BOXES

[FOR INTERFACING UCD TO DCS/MARSHALLING PANELS]

PROJECT: NTPC TALCHER (2X660 MW) TPS

CUSTOMER: M/s NTPC LIMITED

COPY RIGHT AND CONFIDENTIAL
THE INFORMATION ON THIS DOCUMENT IS THE PROPERTY OF BHARAT HEAVY ELECTRICALS LIMITED. IT MUST NOT BE USED DIRECTLY OR INDIRECTLY IN ANY WAY DETRIMENTAL TO THE INTEREST OF THE COMPANY.

SPECIFICATION OF TERMINATION BOXES FOR INTERFACING UCD TO DCS/MARSHALLING PANELS

1.0 REQUIREMENT

1.1 Separate Termination Boxes to be provided for Process Draw-out Console and Electrical Draw-out Console & Synchronising Plaque. The TB types and Designation in Terminal Boxes to be kept exactly similar to the Draw-out Console TB Details. Refer attached Purchase Specification ANNEXURE-V for detailed construction features of Termination Boxes.
Quantity Per Unit = 02 numbers.
[01 Number for Process Draw-out and 1 Number for Generator and Sync. Plaque]
Total Quantity required for 02 Units = 04 numbers.

1.2 CONSTRUCTION

1.2.1 The Termination Box shall be wall mountable type and also suitable for upright floor mounting, confirming to protection class of IP42 with a suitable canopy at the top to prevent ingress of dripping water.

1.2.2 It shall be constructed using CRCA sheet of minimum 2mm thick and shall be of welded construction.

1.2.3 Removable cable gland plates made of 3.0 mm thick CRCA sheet. The gland plates shall be provided along with neoprene gasket. The size of gland plates for each shipping section shall be suitably selected for easy handling.

1.2.4 It should be ensured that the terminal blocks are placed at a minimum height of 150 mm from the bottom of the panel for ease of accessibility. Indicative drawing titled “Reference Termination Box” is attached with this specification. However, this drawing is only for reference. Dimensions of the termination Boxes to be worked out by the vendor ensuring compact design. Vendor to submit detailed drawing of the termination box, engineered as per this specification, mentioning all dimensions.

1.2.5 Door shall be single double leaf doors in the front with 3 point locking arrangement.

1.3 INTERNAL PANELS/ SYSTEM CABINETS WIRING

- All wiring shall be with 1100V grade, single core, FRLS PVC insulated stranded copper conductor. 1100V grade Terminal Blocks shall be provided. Wires shall be vermin proof.
- All internal wires shall be provided with tag and identification nos. etched on tightly fitted ferules at both ends. All wires directly connected to trip devices shall be distinguished by one additional red colour ferrule.
- All external connection shall be made with one wire per termination point. Wires shall not be tapped or spliced between terminal points.
- The terminal blocks for VTs connection to synchroscope shall be provided with test links and isolating facilities.

COPY RIGHT AND CONFIDENTIAL
THE INFORMATION ON THIS DOCUMENT IS THE PROPERTY OF BHARAT HEAVY ELECTRICALS LIMITED. IT MUST NOT BE USED DIRECTLY OR INDIRECTLY IN ANY WAY DETRIMENTAL TO THE INTEREST OF THE COMPANY.

- Wire sizes to be utilised for internal wiring shall be as per below table:

Sr. No.	Utility	Wire Size
i.	Power supply and internal illumination.	2.5 Sq.mm

- The conductor shall be composed of tinned annealed high conductivity copper wire with electrical and mechanical properties in accordance with IS:8130. The details of the conductor shall be as per Table-1.
- The resistance of the conductor at 20° C shall not exceed the appropriate maximum value given in the Table-1. The conductor resistance measured for a length of 25 cm and compared with the resistance of the conductor without any joint shall be not more than 5 % of the resistance of adjacent conductor.
- The insulation shall be provided with polyvinylchloride compound conforming to the requirements of type-YM1 as per VDE 0207 Part-5 & shall be of FRLS type. The average thickness of insulation shall not be less than the nominal value (ti) specified in Table-1.
- Insulation shall be applied over the conductor by extrusion method, in such a way that it fits closely on the conductor and shall be possible to remove it easily, without damage to the conductor.
- Joining of core insulation material is not acceptable and repair work on insulation of core also is not acceptable.
- **ELECTRICAL TESTS:**
  - **HIGH VOLTAGE TEST:**

❖ High voltage test at room temperature (Routine test) as per IS:694. The cable shall withstand an AC voltage of 3 kV (rms).

❖ High voltage test (Water Immersion Test-AC Test) (Type and acceptance Test) as per IS:694. The cable shall withstand an AC voltage of 3 kV (rms).

❖ **SPARK TEST:** IS 694, Clause 16.4 (Routine Test): Test Voltage 5 KV RMS (In process Test by manufacturer, verification of Test report by BHEL).

❖ Insulation Resistance: (IS:5831) (Routine) : Insulation resistance test shall be carried out at 500 volt D.C. The value of volume resistivity when calculated from the measured insulation resistance value shall not be less than $1.0X10^{13}$ Ohm-cm at 70^0C and $1.0X10^{10}$ Ohm-cm at 70^0C.

- **PHYSICAL TEST ON INSULATION (Type Test):** Tensile strength, elongation at break, Heat aging, Heat shock, Shrinkage, Cold bend and Cold impact test shall meet the requirements of Type - A of IS: 5831.
- **TESTS FOR FRLS PROPERTIES (Routine Test):**

Oxygen Index Test(OI): Minimum oxygen index at 25 deg C as per ASTM-D-2863.	29
Temperature Index Test: Minimum temperature Index at OI=21 calculating by method of extrapolation as per ASTM-D-2863 & BICC handbook.	250 DegC
HCl Acid Gas Estimation: Maximum acid gas generation by weight as per IEC-60754 Part I.	20%
Smoke Density Test: Maximum smoke density rating as per ASTM-D-2843.	60%
Flammability Tests: As per IEC-60332-1.	
Thermal Heat Stability Test : At 200 deg C for minimum of 80 minutes as per IEC-60811 P3.	
Swedish Chimney test as per SEN-SS 424 1475 class F3.	

COPY RIGHT AND CONFIDENTIAL

THE INFORMATION ON THIS DOCUMENT IS THE PROPERTY OF BHARAT HEAVY ELECTRICALS LIMITED. IT MUST NOT BE USED DIRECTLY OR INDIRECTLY IN ANY WAY DETRIMENTAL TO THE INTEREST OF THE COMPANY.

TABLE - 1

Sl. No	Conductor cross sectional area. nominal	Diameter of wires in conductor maximum.	Diameter of bunched conductor maximum.	Conductor resistance at 20 Deg C. maximum.	Insulation Thickness nominal	Overall dia. max	packing length per bobbin	Bobbin type
	Sq. mm	**mm**	**mm**	**ohms/KM**	**mm**	**mm**	**meters**	
1	0.50	0.21	0.93	40.1	0.6	2.5	1000	Plastic
2	0.75	0.21	1.14	26.7	0.6	2.7	1000	Plastic
3	1.00	0.21	1.32	20.0	0.6	2.8	1000	Plastic
4	1.50	0.26	1.60	13.7	0.6	3.1	500	Plastic
5	2.50	0.26	2.00	8.21	0.7	3.8	500	Plastic
6	4.00	0.31	2.60	5.09	0.8	4.8	300	Plastic/ Plywood
7	6.00	0.31	3.60	3.39	0.8	6.3	300	Plastic/ Plywood
8	10.00	0.41	4.60	1.95	1.0	7.6	100	Plastic/ Plywood
9	16.00	0.41	5.70	1.24	1.0	8.8	100	Plastic/ Plywood
10	25.00	0.41	7.10	0.795	1.2	11.0	100	Plastic/ Plywood
11	50.00	0.41	10.30	0.393	1.4	14.5	100	Plastic/ Plywood

COPY RIGHT AND CONFIDENTIAL

THE INFORMATION ON THIS DOCUMENT IS THE PROPERTY OF BHARAT HEAVY ELECTRICALS LIMITED. IT MUST NOT BE USED DIRECTLY OR INDIRECTLY IN ANY WAY DETRIMENTAL TO THE INTEREST OF THE COMPANY.

2.0 DESIGN BASIS

2.1 Terminal blocks shall be 8level type, suitable for termination of upto 2.5sqmm cross section cable. TBs & its accessories. They shall be mounted as shown in the attached indicative drawing. TBs to be properly identified and differentiated.

2.2 PVC cable tray/duct of sufficient size shall be provided to accommodate incoming & outgoing cables.

2.3 Panels shall be provided with LED based illuminating lamps with door switch and six (6) point 5/15A, 240V AC universal type power sockets with switch for maintenance purposes. These switches shall be with quick make and break mechanism.

2.4 One number Miniature Ckt. Breaker. 230/400 VAC, Double pole 6A.C-characteristic shall be provided.

2.5 Miscellaneous hardwares & accessories as required.

2.6 Copper earth bus bar of 25x6mm shall be provided and mounted as shown in the indicative drawing. M8 earth studs to be provided for cubicle earthing connection on both sides outside.

2.7 Wiring inside the Termination Box to include LED, Doorswitch, 3pin socket, interconnection between earth bus bar & M8 studs and any such other components to be done by Vendor.

2.8 Documents to be submitted along with the technical offer:

a. Overall General Arrangement drawing.
b. Internal General Arrangement drawing with front view, side view etc.
c. Detailed BOM with make & model.
d. Quality Plan.

2.9 In the event of P.O., the vendor is required to submit Detailed BOM with make & model of all the components with Console Layout drawings, overall general arrangement drawing, Internal general arrangement drawings for the internal arrangement of components, Synch plaque mechanism details & Electrical schematic drawing with wiring of all console items up to the terminal blocks and Quality plan.

All the above documents are required to be submitted to BHEL within 10 days of award of contract.

All documents are required to be submitted to customer for approval.

2.10 Suppliers internal test certificates for dimensions, visual, paint, HV, IR, electrical functions etc. to be submitted to BHEL before giving inspection call.

2.11 Inspection by BHEL/Customer at the vendors works. Items will be directly dispatched to project site. Details shall be intimated at the time of PO

2.12 Modification if necessitated as per site requirement, to be done at no additional cost.

COPY RIGHT AND CONFIDENTIAL

THE INFORMATION ON THIS DOCUMENT IS THE PROPERTY OF BHARAT HEAVY ELECTRICALS LIMITED. IT MUST NOT BE USED DIRECTLY OR INDIRECTLY IN ANY WAY DETRIMENTAL TO THE INTEREST OF THE COMPANY.

3.0 GENERAL TECHNICAL REQUIREMENTS:

3.1 The panels, console/desks shall be reinforced as required to ensure true surfaces and adequate support for instruments mounted thereon. All instrument cutouts, mounting studs, and support brackets shall be accurately located. All welds on the exposed panel surfaces shall be ground smooth. Finished panel surfaces shall be free from waves, bellies, or other imperfections. Panel doors shall be 4 points hinged and shall have turned back edges and additional bracing where required to ensure rigidity. Door hinges shall be of the concealed type. Door latches shall be of the three/four -point type to ensure tight closing. Doors shall be provided with neoprene/polyurethane gasket only.

3.2 All the cable entries shall be from the bottom.

3.3 50x6 mm copper ground bus to be provided.

3.4 Terminal blocks shall be Rail mounted 1100 V AC grade Terminal blocks (Screw less cage clamp type for push button, LED wirings and Clip-on TB 10 sqmm for rest connections) with markers and 20% spare wired terminals of each type. The terminal blocks shall be located to allow easy access.

3.5 Panels shall be provided with LED based illuminating lamps with door switch and six (6) point 5/15A, 240V AC universal type power sockets with switch for maintenance purposes. These switches shall be with quick make and break mechanism. 100 % spare LED lamps shall also be provided.

3.6 All fuses shall be fast acting semiconductor types for AC/DC supply. All the AC power supplies shall be provided with the protection of Fast acting semi conductor fuses & 2 P thermo magnetic type MCB. For all the DC power supply circuits, electronic type DC MCB shall be used only. Make of DC MCB shall be Siemens, Phoenix contacts, Murr, Weidmuller, or Lutze. 50 % spare fuses shall be provided with each panel, these are in additional to mandatory spares.

3.7 Miniaturized push buttons shall be provided as actuating elements to meet the functional requirements for start/stop of Motor/pump, open/close of damper/valve/ electrical breakers, safe shut down of the unit.

3.8 While all efforts have been made to make the specification requirement complete & unambiguous, it shall be bidders' responsibility to ask for missing information, ensure completeness of specification, to bring out any contradictory/ conflicting requirement in different sections & sub -sections of the specification and within a section itself to the notice of BHEL and to seek any clarification on specification requirement during pre-bid clarification stage. In absence of any such clarifications, in case of any contradictory requirement, the more stringent requirement as per interpretation of BHEL / Customer shall prevail and shall be complied by the bidder without any commercial / delivery implication on account of the same.

COPY RIGHT AND CONFIDENTIAL

THE INFORMATION ON THIS DOCUMENT IS THE PROPERTY OF BHARAT HEAVY ELECTRICALS LIMITED. IT MUST NOT BE USED DIRECTLY OR INDIRECTLY IN ANY WAY DETRIMENTAL TO THE INTEREST OF THE COMPANY.

3.9 SURFACE PREPARATION AND PAINTING

3.9.1 PREPARATION OF THE PAINTS:

- Before application of paint, check and ensure that the shelf life of the paint (expiry date of paint as given on the drum/ by manufacturer shall not be lapsed). Check any skin formed on the paint in the container shall be carefully removed, any settled pigment broken up and the paint thoroughly stirred.
- While stirring, ensure complete and uniform mixing of constituents. Care shall be taken to avoid entrapment of air in the paint. The paint shall be strained through a muslin cloth.
- Mix the primer and finish paints with thinner such that the consistency (viscosity) at ambient temperature when measured using Ford Cup No.4 as per IS: 101 is 30 +/- 2 seconds.

3.9.2 SURFACE PREPARATION:

The metallic surfaces to be painted shall be given a chemical pretreatment as per below details. Items shall be painted after pretreatment with minimum time lapse. Before painting, wipe off the pre-treated surface with clean cotton cloth to remove white powdery deposit, if any.
The components to be degreased shall not have excess oil or grease. If excess oil or grease is found, components shall be wiped off using cloth prior to immersion. The components to be deoxidized/ derusted shall not have excessive rust scaling. If excessive rust/scale is present they shall be removed by emerying or items shall be segregated and treated separately considering immersion time and concentration of the bath. Initially, when the fresh bath is prepared, use the bath for 2 to 3 hours using clean dummy loads so that the bath is stabilized/ aged. Fresh chemicals shall be added to the bath after titration check to maintain specified concentration. Titration shall be done periodically according to the loading to ensure concentration. Remove the sludge at the bottom of the tank periodically.
The piece part shall be immediately dried after passivation using dry compressed air blast.
The components to be treated shall be immersed in the tanks made of steel with suitable lining with chemicals, temperature and dipping time as given below.

Sr. No.	PROCESS See Note 3	CONCENTRATION (CHEMICAL IN WATER)	POINTAGE	BATH TEMP (DEG C)	DIPPING TIME
01	DEGREASING (if hot)	3-5 % WT/VOL	27-45	80-90	10-15 MINUTES
	DEGREASING (if cold)	10-15 % WT/VOL	80-90	ROOM TEMP	10-15 MINUTES
02	RINSING IN COLD RUNNING WATER TANK WITH OVERFLOW ARRANGEMENT				
03	DERUSTING (Cold)	20-40% VOL/VOL	20-40	ROOM TEMP	10-20 MINUTES
04	RINSING IN COLD RUNNING WATER TANK WITH OVERFLOW ARRANGEMENT				
05	PHOSPHATING (Cold) See Note 1	5-6 % VOL/VOL	25-30	ROOM TEMP	20-30 MINUTES
06	RINSING IN COLD RUNNING WATER TANK WITH OVERFLOW ARRANGEMENT				
07	PASSIVATION (if hot)	0.1-0.2% VOL/VOL	Free acid: 0.1-0.2 ml per 25 ml; Total acid: 2.5 ml max per 25 ml	80-90	30-45 MINUTES
	PASSIVATION (if cold)	Same as above	Same as above	ROOM TEMP	2-3 MINUTES

COPY RIGHT AND CONFIDENTIAL

THE INFORMATION ON THIS DOCUMENT IS THE PROPERTY OF BHARAT HEAVY ELECTRICALS LIMITED. IT MUST NOT BE USED DIRECTLY OR INDIRECTLY IN ANY WAY DETRIMENTAL TO THE INTEREST OF THE COMPANY.

3.9.3 Panel exterior steel surfaces shall be ground smooth, and painted as specified below: Suitable filler shall be applied to all pits, blemishes and voids in the surfaces. The filler shall be sand blasted so that surfaces are level and flat, corners are smooth and even. Exposed raw metal edges shall be ground burr free. The entire panel surface shall be sand blasted to remove rust and scale and all other residue due to the fabrication operation. Oil grease and salts etc. shall be removed from the panels by one or more solvent cleaning methods. Alternatively 7 tank process shall be followed.

3.9.4 Two spray coats of inhibitive epoxy primer – surface shall be applied to all exterior and interior surfaces; each coat of primer surface shall be of dry film thickness of 1.5 mil. A minimum of two spray coats of final finish colour (Catalysed epoxy finish) shall be applied to all surfaces of dry film thickness 2.0mil. The final finished thickness of paint film on steel shall not be less than 75 microns. The Bidder shall also furnish sufficient touch-up paint for one complete finish coat on all exterior factory applied painted surface of each item of equipment. The finish colours for exterior and interior surfaces shall conform to the following shades:

a) Exterior for front & rear of consoles - RAL: 9002 (Structure Semi glossy finish).
b) Interior for front & rear of consoles - RAL: 9002 (Structure Semi glossy finish).
c) Interior & Exterior for Side covers of consoles - RAL: 5012 (Structure Semi glossy finish).

3.9.5 Paint films, which show sags, checks, blisters teardrops, fat edges or other painting imperfections, shall not be acceptable and if any such defects appear, they shall be repaired by and at the expenses of the Bidder.
However, if there is any change in colour and paint thickness based on customer comments, the same shall be communicated to the vendor. There shall be no change in price due to this.

3.10 O&M Manual (No of Sets):

- Two (2) soft copies(CDs) created in generally accepted standard computer programs (e.g. Microsoft office, Auto Cad etc.).
- Ten (10) sets of hard copies (Hard board plastic folders).

COPY RIGHT AND CONFIDENTIAL

THE INFORMATION ON THIS DOCUMENT IS THE PROPERTY OF BHARAT HEAVY ELECTRICALS LIMITED. IT MUST NOT BE USED DIRECTLY OR INDIRECTLY IN ANY WAY DETRIMENTAL TO THE INTEREST OF THE COMPANY.

3.0 PACKING DETAILS:

- Wooden packing shall be strong and efficient enough to ensure safe preservation without moisture ingress up to the final point of destination.
  - All packages should be wrapped in transparent polythene inside the crates for effective weather proofing.
  - Proper pallets and crates are to be used for packing.
  - Packing cases shall be marked to show the following:
    a. Upright position.
    b. Sling position and center of gravity position.
    c. Storage Category.
    d. Fragile components.
  - The four sides of package shall be lined from inside with packing paper water proof bitumen laminated or polyethylene sheet and tacked at suitable places. Whenever specified in addition to the bitumen laminated paper/polyethylene sheet the top cover will have a layer of bitumen felt over the cover. This should project about 100-250 mm on all sides. It is preferable to have a single piece of the above Kraft paper fixed on all four sides. In case is jointing is unavoidable, I should be done by overlapping of approximately 100 mm.
  - For Electrical and Electronic components, a rubber sheet, self-expandable polyethene foam sheet, preferable 10 mm thick, shall be fixed on the base to act as cushioning to the equipment.
  - To avoid moisture ingress and for corrosion inhibition, provide Silica gel bags/VCI powder tablets, as applicable.
  - Cover the whole equipment with polyethylene sheet of at least 100-micron thickness, on all sides preferably by a single piece.
  - To absorb shocks during transit- Thermocole/wood wool/Polyethylene air bubble film should be placed in Empty spaces / space between the material and wooden body.
  - The inner side of the top cover shall be lined with polyethylene sheet of at least 100-micron thickness, which shall project approximately 25 to 150 mm depending upon the size of the case on all sides of the top cover. This projection after nailing the top cover shall be folded over on the sides of the crates and tacked to prevent ingress of water from the top.
  - Top surface of the case shall be free from dents to prevent rain water pockets.
  - While fixing nails during packing, necessary care shall be taken to ensure that materials used for protection inside the case e.g. paper, polyethylene sheet, coir etc. do not get damaged.
  - Sling protection brackets to be provided on cases wherever required.
  - One copy of detailed packing list should be kept inside the package. One packing holder with packing list should be provided outside of the package. The packing list holder/aluminum holder should also be sealed in thick polyethylene film
- Unit 1, 2 Drawout Consoles, CHP Drawout Consoles, termination boxes should be packed separately.
- Spares should be packaged separately
- Labels should be put on the packages to identify area wise (Unit-1, 2, CHP, Termination boxes) materials.
- One copy of detailed packing list should be kept inside the package. One packing holder with packing list should be provided outside of the package. The packing list holder/aluminum holder should also be sealed in thick polyethylene film

COPY RIGHT AND CONFIDENTIAL
THE INFORMATION ON THIS DOCUMENT IS THE PROPERTY OF BHARAT HEAVY ELECTRICALS LIMITED. IT MUST NOT BE USED DIRECTLY OR INDIRECTLY IN ANY WAY DETRIMENTAL TO THE INTEREST OF THE COMPANY.

Sr. No	DESCRIPTION [INSIDE MOUNTED ITEMS]	TOTAL QTY/ TERMINATION BOX
1.	Cage clamp 8 level TBs with 2 input and 2 outputs with accessories	As required +20% spare
2.	Clip-on TB 10 sqmm with accessories.	As required +20% spare
3.	Disconnecting & testing type clip-on terminal CATDM4 / CLTDM4 sqmm with accessories.	As required +20% spare
4.	Door switches.	02
5.	LED Lamp.	01
6.	Fuse 4A with fuse base.	01
7.	HRC Link.	01
8.	Power socket 5/15A.	01
9.	Miniature Ckt. Breaker. 230/400 VAC, Double pole 6A.C-characteristic	01

1. Cage & clamp type TBs shall be procured from following approved suppliers:

Sr. No.	Supplier	Country/Place
1.	Weidmuller	Germany
2.	Phoenix	Germany/India
3.	Wago	Germany/India
4.	Elmex	Vadodara
5.	Connectwell	Mumbai

COPY RIGHT AND CONFIDENTIAL
THE INFORMATION ON THIS DOCUMENT IS THE PROPERTY OF BHARAT HEAVY ELECTRICALS LIMITED. IT MUST NOT BE USED DIRECTLY OR INDIRECTLY IN ANY WAY DETRIMENTAL TO THE INTEREST OF THE COMPANY.

2. 1.1 KV Control Cables (PVC, FRLS Type) shall be procured from following suppliers:

Sr. No.	Supplier	Country/Place
1.	Advance Cable	Bengaluru
2.	Apar Industries Ltd	Umbergaon
3.	Cords Cables	Bhiwadi
4.	CMI	Faridabad
5.	CMI	Baddi
6.	Delton Cables Ltd.	Faridabad
7.	Elkay Telelink	Faridabad
8.	Gemscabs Industries	Bhiwadi
9.	Goyoline Fibres (I) Ltd	Daman
10.	Gupta Power Cables	Khurdha
11.	Havells India Ltd.	Alwar
12.	KEC International	Silvassa , Mysore
13.	KEI Industries Ltd.	Bhiwadi
14.	Paramount Cables	Khushkhera
15.	Polycab Wires Pvt. Ltd.	Daman
16.	Ravin Cables	Pune
17.	Special Cables	Rudrapur
18.	Suyog Cables	Vadodara
19.	ThermoCables	Hyderabad
20.	Tirupati Plastomatics	Jaipur
21.	Torrent Cable Ltd	Nadiad
22.	Universal Cable	Satna

Note: The above listed vendors are subject to customer approval.

SPECIFICATION

1.	TITLE:	TERMINATION BOX
2.	INSTALLATION:	INDOOR
3.	DIMENSION:	1200mm(H) X 750mm(W) X 750mm(D) MINIMUM
4.	PROTECTION:	IP-42
5.	FABRICATION:	TYPE: WELDED
		SHEET SIZE(SIDE): 2mmTHK. CRCA SHEET
		SHEET SIZE (FRONT DOOR): 2mmTHK. CRCA SHEET
		SHEET SIZE(REAR): 2mmTHK. CRCA SHEET
		SHEET SIZE(TOP): 2mmTHK. CRCA SHEET
		GLAND PLATE: 3mm THK. CRCA SHEET, REMOVABLE
6.	FRONT DOOR:	DOUBLE LEAF
	TYPE:	PROJECTED TYPE
	LOCK:	3 POINT LOCK
7.	REAR DOOR :	NOT APPLICABLE
8.	PAINT METHOD:	FINISHING :- EPOXY BASED POWDER COATING, MIN THK. 65-75 MICRONS. STRUCTURE FINISH
		INTERIOR & EXTERIOR FOR FRONT & REAR - GREY WHITE RAL: 9002 (SEMI GLOSSY).
		INTERIOR & EXTERIOR FOR SIDE COVERS-BLUE RAL: 5012 (SEMI GLOSSY).
9.	GASKET:	PU FOAM GASKET
10.	CABLE ENTERY	FROM BOTTOM ONLY
11.	EARTH BOLT:	M8X25 EARTH BOLT
12.	ELECTRICAL ITEMS:	a) 01 NO. LED TUBE LIGHT, RATING:05 WATT, 230VAC. b) 01 NO. DOOR SWITCH. c) 01 NO. POWER SOCKET 5A, 240V SINGLE PHASE AC, 3PIN SOCKET WITH SWITCH
13.	EARTH BUS BAR	COPPER EARTH BUS BAR OF 50X6MM
14.	QUANTITY:	02 NUMBERS PER UNIT. TOTAL 04 NUMBERS.

REV. CD.	DATE	ALTD HK	CKD PD	APPD PD	REV. CD.	DATE	ALTD HK -SD-	CKD PD -SD-	APPD PD -SD-	REV. CD.	DATE	ALTD HK -SD-	CKD PD -SD-	APPD PD -SD-

PROJECT:	NTPC TALCHER (2X660 MW) TPS
CUSTOMER:	NTPC LTD. (A GOVERNMENT OF INDIA ENTERPRISE)
EPC CONTRACTOR:	BHARAT HEAVY ELECTRICALS LTD.
BHARAT HEAVY ELECTRICALS LTD ELECTRONICS DIVISION BANGALORE	DEPT CODE 410 — DRN NST -SD- 25.06.2025; DESN GS -SD- 25.06.2025; CHD JK -SD- 25.06.2025; APPD MS -SD- 25.06.2025
TITLE	GA DRAWING OF TERMINATION BOX
SCALE – 1:1	DRAWING NO. 4540-001-110-PVE-B-053B
SHEET 01 OF 03	REV. 00

FORMAT SIZE A3

COPYRIGHT AND CONFIDENTIAL
© BHARAT HEAVY ELECTRICALS LIMITED
The information on this document is the property of BHARAT HEAVY ELECTRICALS LIMITED
It must not be used directly or indirectly in any way detrimental to the interest of the company.

ELECTRONIC FILE NAME:

DRAWING NO.

FIRST ANGLE PROJECTION

ALL DIMENSIONS ARE IN MM

FIRST ANGLE PROJECTION

ALL DIMENSIONS ARE IN MM

DRAWING NO.

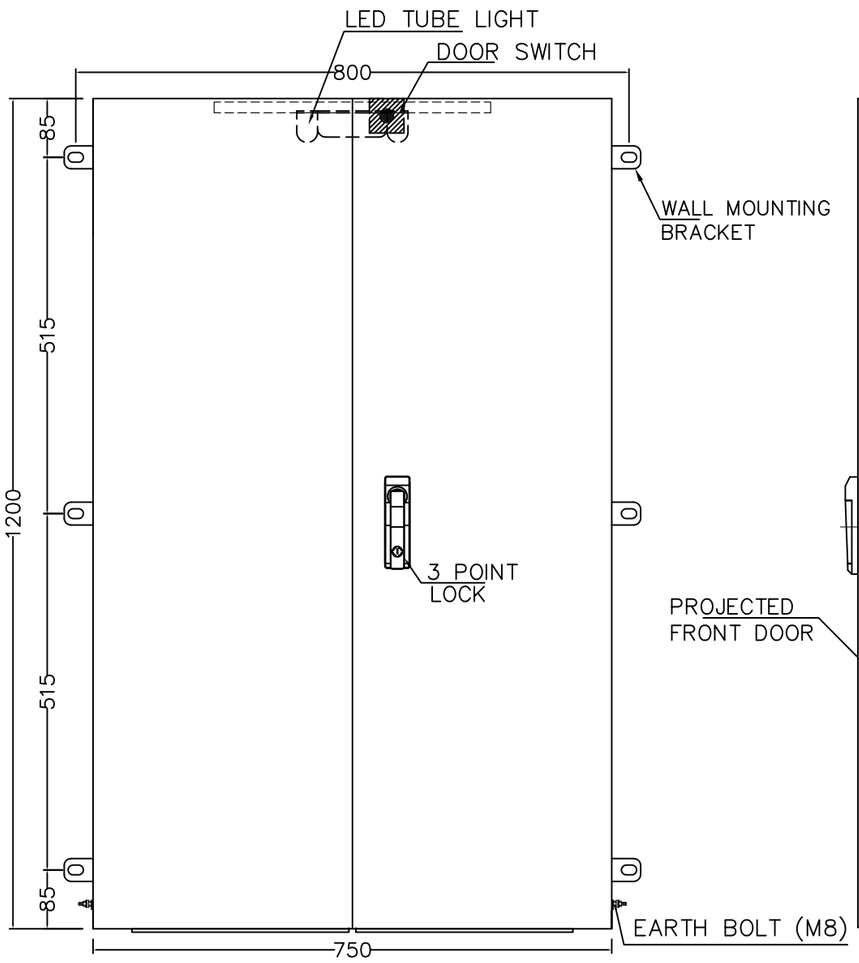

FRONT VIEW

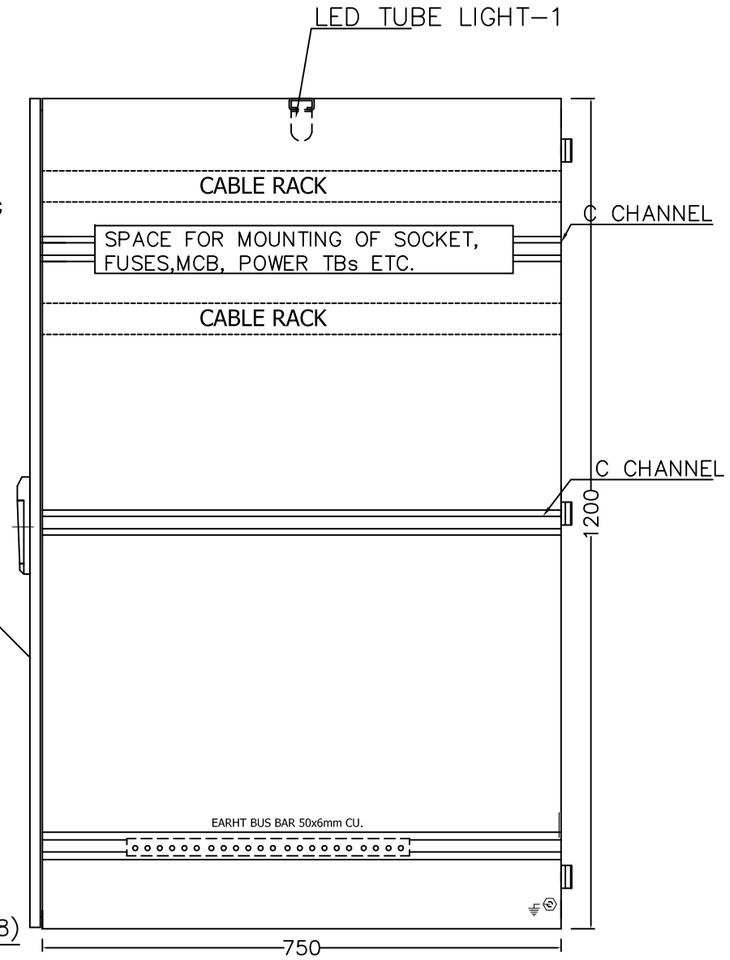

RHS VIEW

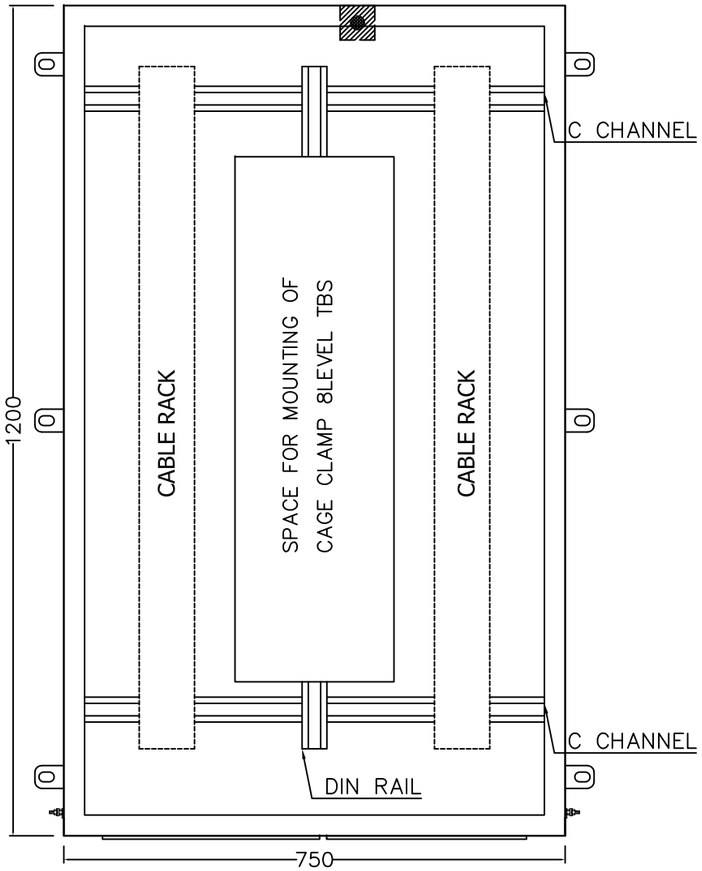

INTERNAL FRONT VIEW

REV. 03	DATE	ALTD HK	CHD PD	APPD PD	REV. 02	DATE	ALTD HK -SD-	CHD PD -SD-	APPD PD -SD-	REV. 01	DATE	ALTD HK -SD-	CHD PD -SD-	APPD PD -SD-

PROJECT:	NTPC TALCHER (2X660 MW) TPS
CUSTOMER:	NTPC LTD. (A GOVERNMENT OF INDIA ENTERPRISE)
EPC CONTRACTOR:	BHARAT HEAVY ELECTRICALS LTD.

BHARAT HEAVY ELECTRICALS LTD
ELECTRONICS DIVISION
BANGALORE

DEPT CODE		NAME	SIGN	DATE
410	DRN	NST	-SD-	25.06.2025
	DESN	GS	-SD-	25.06.2025
	CHD	JK	-SD-	25.06.2025
	APPD	MS	-SD-	25.06.2025

TITLE: GA DRAWING OF TERMINATION BOX

SCALE – 1:1

DRAWING NO. 4540-001-110-PVE-B-053B

SHEET 02 OF 03 REV. 00

FORMAT SIZE A3

ELECTRONIC FILE NAME:

COPYRIGHT AND CONFIDENTIAL
© BHARAT HEAVY ELECTRICALS LIMITED
The information on this document is the property of BHARAT HEAVY ELECTRICALS LIMITED
It must not be used directly or indirectly in any way detrimental to the interest of the company.

FIRST ANGLE PROJECTION

ALL DIMENSIONS ARE IN MM

DRAWING NO.

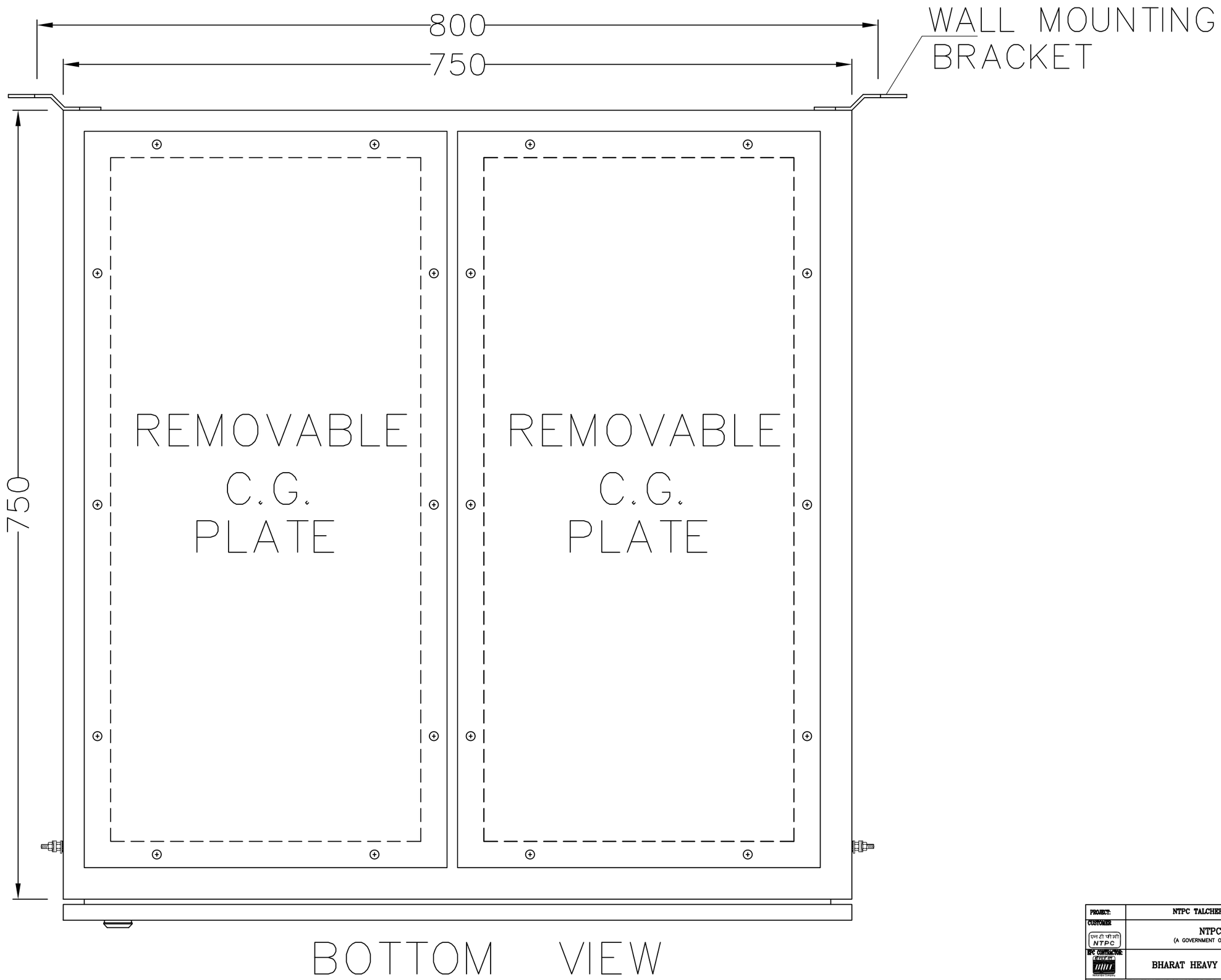

COPYRIGHT AND CONFIDENTIAL
© Copyright 2025 BHARAT HEAVY ELECTRICALS LIMITED
The information on this document is the property of BHARAT HEAVY ELECTRICALS LIMITED
It must not be used directly or indirectly in any way detrimental to the interest of the company.

ELECTRONIC FILE NAME:

REV. 00	DATE	ALTD IR	CKD PD	APPD PD	REV. 02	DATE	ALTD IR. -SD-	CKD PD. -SD-	APPD PD. -SD-	REV. 01.	DATE	ALTD IR. -SD-	CKD PD. -SD-	APPD PD. -SD-

PROJECT:	NTPC TALCHER (2X660 MW) TPS
CUSTOMER:	NTPC LTD. (A GOVERNMENT OF INDIA ENTERPRISE)
EPC CONTRACTOR:	BHARAT HEAVY ELECTRICALS LTD.
BHARAT HEAVY ELECTRICALS LTD ELECTRONICS DIVISION BANGALORE	

DEPT CODE		NAME	SIGN	DATE
410	DRN	NST	-SD-	25.06.2025
	DESN	GS	-SD-	25.06.2025
	CHD	JK	-SD-	25.06.2025
	APPD	MS	-SD-	25.06.2025

TITLE: GA DRAWING OF TERMINATION BOX

SCALE – 1:1

DRAWING NO. 4540-001-110-PVE-B-053B

SHEET 03 OF 03 REV. 00

FORMAT SIZE A3

COPYRIGHT AND CONFIDENTIAL
The information contained in this document is the property of *BHARAT HEAVY ELECTRICALS LIMITED*
This must not be used directly or indirectly, in any manner detrimental to the interest of the company

CUSTOMER	**: M/s NTPC**
EQUIPMENTS	**:(OPEN TYPE) OPERATOR DESK**
	1. TWO SECTION (OPEN TYPE) OPERATOR DESK (2 m)-UNIT INCHARGE
PR0500006461	**2. THREE SECTION (OPEN TYPE) OPERATOR DESK (3 m)-UNIT INCHARGE**
PR0500005958	**3. THREE SECTION (OPEN TYPE) OPERATOR DESK (3 m)-FGD**
	4. FIVE SECTION (OPEN TYPE) OPERATOR DESK - TRAINING SIMULATOR CONTROL DESK
	5. THREE SECTION (OPEN TYPE) OPERATOR DESK -INSTRUCTOR DESK

COPYRIGHT AND CONFIDENTIAL
The information contained in this document is the property of *BHARAT HEAVY ELECTRICALS LIMITED*
This must not be used directly or indirectly, in any manner detrimental to the interest of the company

REVISION HISTORY SHEET

REV No.	DATE	NATURE OF CHANGE	REASON	PREPARED BY	CHECKED BY	REVIEWED BY
00	19.04.2017	FIRST ISSUE	---	AS	KP	KP
01	04.04.2023	SECOND ISSUE	PROJECT NAME REMOVED , 3m Desk Spec, Simulator and Instructor Desk Spec Added	SN	AS	BNS

COPYRIGHT AND CONFIDENTIAL
The information contained in this document is the property of *BHARAT HEAVY ELECTRICALS LIMITED*
This must not be used directly or indirectly, in any manner detrimental to the interest of the company

SECTION1 – TWO SECTION (OPEN TYPE) OPERATOR DESK

Sl. No.	Specification	Supplier's Remark
1	Desk is required as per drawing enclosed (DRAWING-I). The desk should consist of vertical, horizontal and base support with their coverings for work surface, sliding keyboard trays, mouse pads, monitor shelf and concealed cable and wire way management, perforated trays with covers in both horizontal and vertical.	
2	The top surface of desk shall be 30mm thick with the top 12mm of acrylic solid surface and remaining 18mm of laminated medium density fiber board. Foot, cantilever beams, Cable managers to be made of Extruded/Cast Aluminum/CRCA laminated steel, Support legs and Horizontal supports (if required) below Work surface to be of minimum 2.0 mm thick suitable die cast/extruded Aluminum / CRCA laminated steel profile.	
3	Desk width, depth shall be as per the drawing enclosed (DRAWING-I). CPU shall be mounted on CPU trolleys.	
4	Profiled extended support and cantilevered beam of Aluminum / steel with suspension hook (if required) to support legs to be provided which should have powder coated finish in approved color / shade.	
5	The Desk can be designed, manufactured and supplied in separate shipping sections.	

SECTION 2 – THREE SECTION (OPEN TYPE) OPERATOR DESK –UNIT INCHARGE

Sl. No.	Specification	Supplier's Remark
1	Desk is required as per drawing enclosed (DRAWING-II). The desk shall be free standing top type with with **front &** back **cover** constructed of **1.6** mm thick CRCA steel plates. The desk should consist of vertical, horizontal and base support with their coverings for work surface, sliding keyboard trays, mouse pads, monitor shelf and concealed cable and wire way management, perforated trays with covers on both horizontal and vertical.	
2	The top surface of control desk shall be 30mm thick with the top 12mm of acrylic solid surface and remaining 18mm of laminated medium density fiber board. Work surface shall be made of two different colours at same level and seamlessly joined in each section. The structure frame shall consist of extruded aluminium top and bottom horizontal beams and vertical support tensioned together to form an integrated, finished curvilinear shaped frame. Vertical & Horizontal supports, minimum 2.5mm and 2mm thick respectively, have to be provided for the structure frame. Extreme side legs shall be illuminated type and should complete the overall form and aesthetics of the desk. It shall have concealed cable & wire way management system.	
3	Desk width, depth shall be as per the drawing enclosed (DRAWING-II). CPU shall be mounted on CPU trolleys.	
4	Profiled extended support and cantilevered beam of Aluminum / steel with suspension hook (if required) to support legs to be provided which should have powder coated finish in approved color / shade.	
5	The Desk can be designed, manufactured and supplied in separate shipping sections.	
6	Profile and construction of the Unit Incharge Desk shall be same as that of CD. Provision for Operator Work Station and PA system/ telephone handset etc. shall be provided similar to the Control Desk..	

COPYRIGHT AND CONFIDENTIAL
The information contained in this document is the property of *BHARAT HEAVY ELECTRICALS LIMITED*
This must not be used directly or indirectly, in any manner detrimental to the interest of the company

SECTION 3 – THREE SECTION (OPEN TYPE) OPERATOR DESK –FGD

Sl. No.	Specification	Supplier's Remark
1	Desk is required as per drawing enclosed (DRAWING-III). The desk shall be free standing top type with with **front &** back **cover** constructed of **1.6** mm thick CRCA steel plates. The desk should consist of vertical, horizontal and base support with their coverings for work surface, sliding keyboard trays, mouse pads, monitor shelf and concealed cable and wire way management, perforated trays with covers on both horizontal and vertical.	
2	The top surface of control desk shall be 30mm thick with the top 12mm of acrylic solid surface and remaining 18mm of laminated medium density fiber board. Work surface shall be made of two different colours at same level and seamlessly joined in each section. The structure frame shall consist of extruded aluminium top and bottom horizontal beams and vertical support tensioned together to form an integrated, finished curvilinear shaped frame. Vertical & Horizontal supports, minimum 2.5mm and 2mm thick respectively, have to be provided for the structure frame. Extreme side legs shall be illuminated type and should complete the overall form and aesthetics of the desk. It shall have concealed cable & wire way management system.	
3	Desk width, depth shall be as per the drawing enclosed (DRAWING-III). CPU shall be mounted on CPU trolleys.	
4	Profiled extended support and cantilevered beam of Aluminum / steel with suspension hook (if required) to support legs to be provided which should have powder coated finish in approved color / shade.	
5	The Desk can be designed, manufactured and supplied in separate shipping sections.	

SECTION 4 – FIVE SECTION OPERATOR DESK – TRAINING SIMULATOR CONTROL DESK

Sl. No.	Specification	Supplier's Remark
1	Desk is required as per drawing enclosed (DRAWING-IV). The desk should consist of vertical, horizontal and base support with their coverings for work surface, sliding keyboard trays, mouse pads, monitor shelf and concealed cable and wire way management, perforated trays with covers on both horizontal and vertical. The desk consists of 5 sections as per this specification and drawing. It is meant to house Computers (Workstation) along with max. 24" LED monitors, mouse & keyboards. Each of the five enclosures shall be designed for placing one work station. Each of the five sections shall be designed for placing one monitors. Total of 5 Nos. Computers/workstations and 5 Nos. monitors to be housed in this proposed desk.	
2	The top surface of control desk shall be 30mm thick with the top 12mm of acrylic solid surface and remaining 18mm of laminated medium density fiber board. Work surface shall be made of two different colours at same level and seamlessly joined in each section. The structure frame shall consist of extruded aluminium top and bottom horizontal beams and vertical support tensioned together to form an integrated, finished curvilinear shaped frame. Vertical & Horizontal supports, minimum 2.5mm and 2mm thick respectively, have to be provided for the structure frame. Extreme side legs shall be illuminated type and should complete the overall form and aesthetics of the desk. It shall have concealed cable & wire way management system.	
3	TRAINING SIMULATOR CONTROL DESK shall be furnished complete with fire retardant 1.5sqmm wiring with electrical convenience outlets with internal CFL tube lighting, grounding, ventilation (exhaust fans), anti-vibration pads, internal wire managers & accessories as required for completeness of the system. The bottom of desk & cabinets shall be sealed with bottom plate, cable glands and sealing material to prevent ingress of	

	dust and propagation of fire. Refer to DRAWING-IV	
4	Profiled extended support and cantilevered beam of Aluminum / steel with suspension hook (if required) to support legs to be provided which should have powder coated finish in approved color / shade.	
5	The Desk can be designed, manufactured and supplied in separate shipping sections.	

SECTION 5 – THREE SECTION OPERATOR DESK –INSTRUCTOR DESK

Sl. No.	Specification	Supplier's Remark
1	Desk is required as per drawing enclosed (DRAWING-V). The desk should consist of vertical, horizontal and base support with their coverings for work surface, sliding keyboard trays, mouse pads, monitor shelf and concealed cable and wire way management, perforated trays with covers on both horizontal and vertical. The desk consists of 3 sections as per this specification and drawing. It is meant to house Computers (Workstations) along with max. 24" LED monitors, mouse & keyboards.	
2	The top surface of control desk shall be 30mm thick with the top 12mm of acrylic solid surface and remaining 18mm of laminated medium density fiber board. Work surface shall be made of two different colours at same level and seamlessly joined in each section. The structure frame shall consist of extruded aluminium top and bottom horizontal beams and vertical support tensioned together to form an integrated, finished curvilinear shaped frame. Vertical & Horizontal supports, minimum 2.5mm and 2mm thick respectively, have to be provided for the structure frame. Extreme side legs shall be illuminated type and should complete the overall form and aesthetics of the desk. It shall have concealed cable & wire way management system.	
3	INSTRUCTOR DESK shall be furnished complete with fire retardant 1.5sqmm wiring with electrical convenience outlets with internal CFL tube lighting, grounding, ventilation (exhaust fans), anti-vibration pads, internal wire managers & accessories as required for completeness of the system. The bottom of desk & cabinets shall be sealed with bottom plate, cable glands and sealing material to prevent ingress of dust and propagation of fire. Refer to DRAWING-V	
4	Profiled extended support and cantilevered beam of Aluminum / steel with suspension hook (if required) to support legs to be provided which should have powder coated finish in approved color / shade.	
5	The Desk can be designed, manufactured and supplied in separate shipping sections.	

NOTE(Applicable for all sections):

1. Dimensions are indicative, detailed component size and specification may be vendor specific within broad specs given above.
2. As required Nos. of 4 way, 5/15 Amps power socket strip mounted on each of the shelves.

COPYRIGHT AND CONFIDENTIAL
The information contained in this document is the property of *BHARAT HEAVY ELECTRICALS LIMITED*
This must not be used directly or indirectly, in any manner detrimental to the interest of the company

COPYRIGHT AND CONFIDENTIAL
The information contained in this document is the property of *BHARAT HEAVY ELECTRICALS LIMITED*
This must not be used directly or indirectly, in any manner detrimental to the interest of the company

GENERAL SPECIFICATIONS

Sl. No.	Specification	Supplier's Remark
1	Finished surface to be free from waves, belies or other imperfections. Surface to be Powder Coated or if Spray painted, 2 coats of inhibitive epoxy primer surface to be applied. Paint with Minimum of 2 coats of Primer and 2 sprays of final finish color to be applied OR powder coated with epoxy paint. Exact color and shade of components will be specified at the time of Order placement. Minimum thickness for Aluminum Sheets: is 30 microns. For MS Components: is 65 microns	
2	Along with offer detailed drawings showing sectional view, top view, front view, and rear view of desks and tables, electrical wiring diagram with bill of materials for each item, and images and/or catalogue of computer chairs.	
3	Documents to be submitted for manufacturing approval: ▪ Detailed OGA with front view, top view, rear view, sectional view, and floor cut-out details for desks and tables. ▪ Electrical Wiring Diagram with BOM of HMI operator desk, draw-out consoles, synchroscope, and Two section desk. ▪ Quality Plan ▪ Color Shade options.	
4	Supplier internal Test certificate for dimensions, Visual inspection, paint, HV, IR, electrical functions to be submitted before giving inspection calls to BHEL.	
5	Inspection by BHEL / CUSTOMER at supplier's work.	
6	All items will be directly dispatched to project site from supplier works after obtaining necessary clearance from BHEL. Consignee details will be intimated at the time of placement of PO.	
7	All items shall be packed in complete weather proof packing with sufficient cushioning to avoid transit damage. Suitable pallet shall be provided for handling and transportation	
8	Name Plates with following details are to be provided for each shipping section. ▪ Item: **As per PO** ▪ Project Name / Unit no: **As per PO** ▪ Customer Name: **As per PO** ▪ BHEL Order No.: **As per PO** ▪ Date of dispatch to site: **As per PO**	
9	Assembly, erection and installation, including laying of power cables, keyboard, mouse and monitor extender cables, termination of the cables, at site to be carried out by supplier. Offer to include charges for same along with necessary touch up etc.	
10	Modifications as per site requirements to be done on free of cost to match with floor opening for cables. Site work for aligning and matching the curvature of desk as shown in enclosed drawing is under supplier scope.	
11	Warranty: Offer to include "Two years' warranty at site" for all items against manufacturing defects from date of supply. Warranty to include all costs towards material, labor, to fro, traveling, accommodation and stay etc. Exact location of the project site will be intimated at the time of PO.	

Note: Supplier is required to submit the filled, signed and stamped copy of this specification along with the offer, failing which offer is liable for rejection.

Annexures:

~~DRAWING I – HMI TWO SECTION (OPEN TYPE) OPERATOR DESK (2 m) drawing~~
DRAWING II – UNIT INCHARGE DESK/ CONTROL DESK (3 m) drawing
DRAWING III – CONTROL DESK FOR FGD (3 m) drawing
~~DRAWING IV – CONTROL DESK FOR TRAINING SIMULATOR CONTROL DESK drawing~~
~~DRAWING V – CONTROL DESK FOR INSTRUCTOR DESK drawing~~

FIRST ANGLE PROJECTION

(ALL DIMENSIONS ARE IN mm)

DRG. No. 3 659 44 05471

COPYRIGHT AND CONFIDENTIAL
THE INFORMATION ON THIS DOCUMENT IS THE PROPERTY OF BHARAT HEAVY ELECTRICALS LTD. IT MUST NOT BE USED DIRECTLY OR INDIRECTLY IN ANY WAY DETRIMENTAL TO THE INTEREST OF THE COMPANY.

UNIT INCHARGE DESK / CONTROL DESK OF 3 mtrs

DRAWING-II

NOTES :

1) THE TOP SURFACE OF CONTROL DESK SHALL BE 30mm THICK WITH THE TOP 12MM OF ACRYLIC SOLID SURFACE AND THE REMAINING 18MM OF LAMINATED MEDIUM DENSITY .
2) COLOR OF TABLE TOP : AS PER APPROVAL.
3) FOOT, CANTILEVER, BEAMS, CABLE MANAGERS TO BE MADE OF EXTRUDE/CAST ALUMINIUM/CRCA LAMINATED STEEL, SUPPORT LEGS & HORIZONTAL SUPPORTS (IF REQUIRED) BELOW WORK SURFACE TO BE OF MINIMUM 2.0mm THICK. SUITABLE DIE/CAST/EXTRUDED ALUMINIUM/CRCA LAMINATED STEEL.
4) ALL ALUMINUM EXTRUSIONS WILL BE POWDER COATED IN ALUMINUM GREY
5) FRONT & BACK COVERS : PERFORATED SHEET THICKNESS 1.6mm
6) EXTREME SIDE LEGS SHALL BE ILLUMINATED TYPE AND SHOULD COMPLETE THE OVERALL FORM AND AESTHETICS OF THE DESK
7) PAINT SHADE : AS PER APPROVAL
8) DIMENSIONS ARE INDICATIVE AND SUBJECT TO CHANGE BASED ON MODEL/SUPPLIER AVAILABILITY.

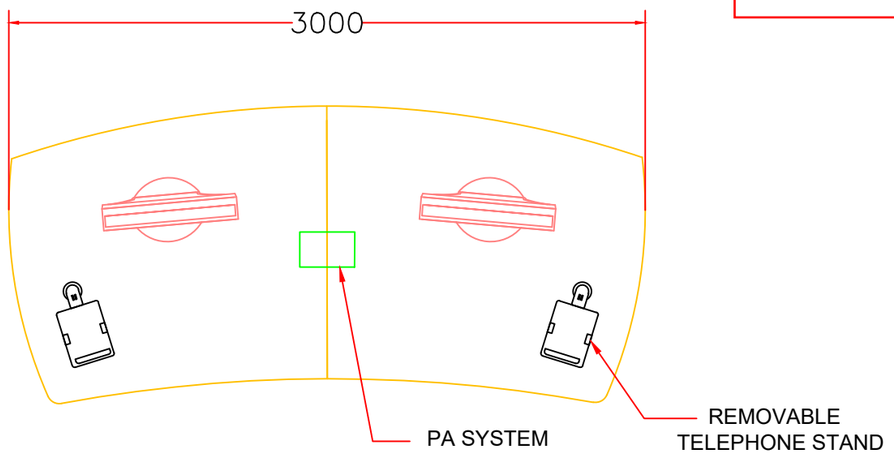

TOP VIEW

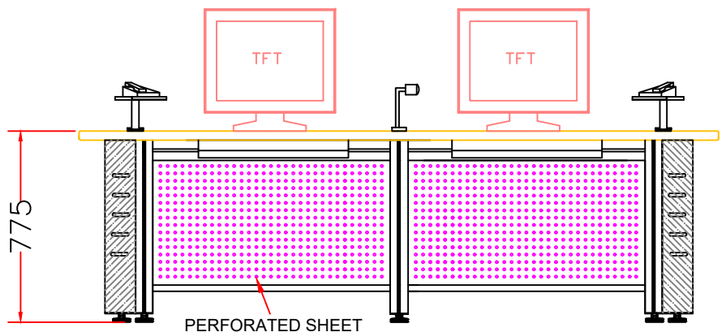

FRONT VIEW

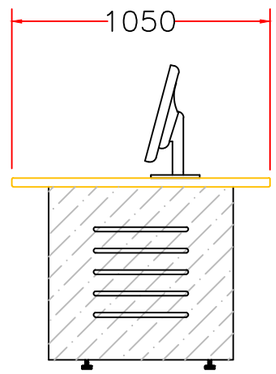

SIDE VIEW

PRODUCT : TALCHER THERMAL POWER PROJECT STG-III (2X660 MW)
CUSTOMER: M/s NTPC

REV.	DATE	ALTERED / CHECKED / APPROVED	REV.	DATE	ALTERED / CHECKED / APPROVED

	NAME	SIGN	DATE
DRAWN	S.H.K		21-10-2025
CHECKED	S.N		21-10-2025
APPROVED	B.N.S		21-10-2025

DEPT. ENGG | CODE 404

BHARAT HEAVY ELECTRICALS LIMITED.
ELECTRONICS DIVISION, BANGALORE

TITLE: OGA OF CONTROL DESK OF 3 mtrs (UNIT INCHARGE DESK)

No. OF SHEETS 07
SHEET No. 07

WBS. No. CE/1895-PR1/2-56-01
DRG. No. 3 659 44 05471
REV 00

REF. DRG. No. 36594402806 01

SIGN. & DATE

INVENTORY No.

COPYRIGHT AND CONFIDENTIAL
THE INFORMATION ON THIS DOCUMENT IS THE PROPERTY OF BHARAT HEAVY ELECTRICALS LTD. IT MUST NOT BE USED DIRECTLY OR INDIRECTLY IN ANY WAY DETRIMENTAL TO THE INTEREST OF THE COMPANY.

DRG. No. 3 659 44 05471

CONTROL DESK OF 3 mtrs

DRAWING-III

NOTES :

1) THE TOP SURFACE OF CONTROL DESK SHALL BE 30mm THICK WITH THE TOP 12MM OF ACRYLIC SOLID SURFACE AND THE REMAINING 18MM OF LAMINATED MEDIUM DENSITY .
2) COLOR OF TABLE TOP : AS PER APPROVAL.
3) FOOT, CANTILEVER, BEAMS, CABLE MANAGERS TO BE MADE OF EXTRUDE/CAST ALUMINIUM/CRCA LAMINATED STEEL, SUPPORT LEGS & HORIZONTAL SUPPORTS (IF REQUIRED) BELOW WORK SURFACE TO BE OF MINIMUM 2.0mm THICK. SUITABLE DIE/CAST/EXTRUDED ALUMINIUM/CRCA LAMINATED STEEL.
4) ALL ALUMINUM EXTRUSIONS WILL BE POWDER COATED IN ALUMINUM GREY
5) FRONT & BACK COVERS : PERFORATED SHEET THICKNESS 1.6mm
6) EXTREME SIDE LEGS SHALL BE ILLUMINATED TYPE AND SHOULD COMPLETE THE OVERALL FORM AND AESTHETICS OF THE DESK
7) PAINT SHADE : AS PER APPROVAL
8) DIMENSIONS ARE INDICATIVE AND SUBJECT TO CHANGE BASED ON MODEL/SUPPLIER AVAILABILITY.

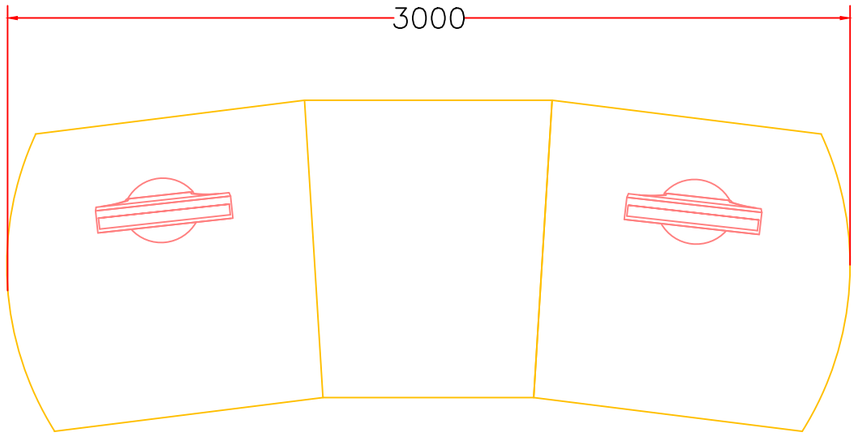

TOP VIEW

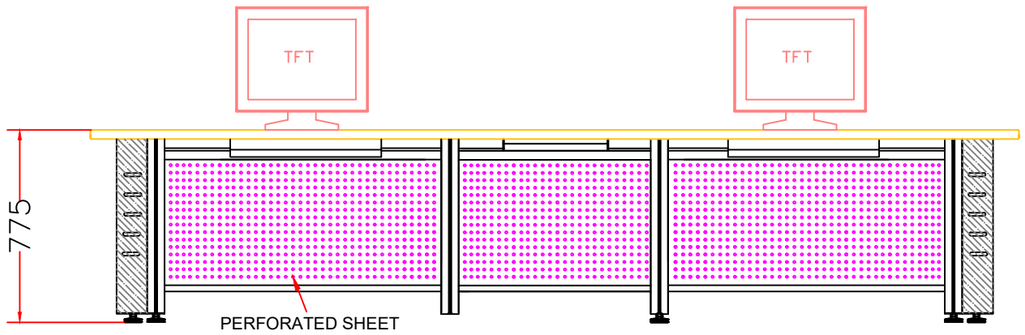

FRONT VIEW

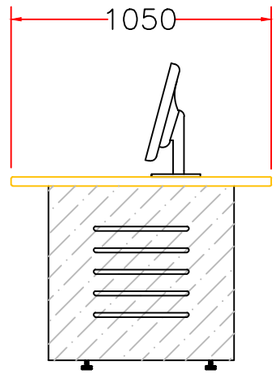

SIDE VIEW

PRODUCT : TALCHER THERMAL POWER PROJECT STG-III (2X660 MW)
CUSTOMER: M/s NTPC

BHARAT HEAVY ELECTRICALS LIMITED.
ELECTRONICS DIVISION, BANGALORE

REV.	DATE	ALTERED / CHECKED / APPROVED	REV.	DATE	ALTERED / CHECKED / APPROVED

	NAME	SIGN	DATE
DRAWN	S.H.K		21-10-2025
CHECKED	S.N		21-10-2025
APPROVED	B.N.S		21-10-2025

DEPT. ENGG | CODE 404

TITLE: OGA OF CONTROL DESK OF 3 mtrs

No. OF SHEETS 07
SHEET No. 06

WBS. No. CE/1895-PR1/2-56-01
DRG. No. 3 659 44 05471
REV 00

REF. DRG. No. 36594402806 01
SIGN. & DATE
INVENTORY No.

COPYRIGHT AND CONFIDENTIAL
The information contained in this document is the property of *BHARAT HEAVY ELECTRICALS LIMITED*
This must not be used directly or indirectly, in any manner detrimental to the interest of the company

CUSTOMER	**: M/s NTPC**
EQUIPMENTS	**:(OPEN TYPE) OPERATOR DESK**
PR0500006519	**1. FOUR SECTION (OPEN TYPE) OPERATOR DESK (4 m) - Water system Package & AHP Package**

COPYRIGHT AND CONFIDENTIAL
The information contained in this document is the property of *BHARAT HEAVY ELECTRICALS LIMITED*
This must not be used directly or indirectly, in any manner detrimental to the interest of the company

REVISION HISTORY SHEET

REV No.	DATE	NATURE OF CHANGE	REASON	PREPARED BY	CHECKED BY	REVIEWED BY
00	19.04.2017	FIRST ISSUE	---	AS	KP	KP
01	01.04.2023	Second ISSUE	Modified the spec for Patratu Project	SN	AS	BNS

COPYRIGHT AND CONFIDENTIAL
The information contained in this document is the property of *BHARAT HEAVY ELECTRICALS LIMITED*
This must not be used directly or indirectly, in any manner detrimental to the interest of the company

SECTION1 – FOUR SECTION (OPEN TYPE) OPERATOR DESK

Sl. No.	Specification	Supplier's Remark
1	Desk is required as per drawing enclosed (DRAWING-I). The desk shall be free standing top type with with front & back cover constructed of 1.6 mm thick CRCA steel plates. The desk should consist of vertical, horizontal and base support with their coverings for work surface, sliding keyboard trays, mouse pads, monitor shelf and concealed cable and wire way management, perforated trays with covers on both horizontal and vertical.	
2	The top surface of control desk shall be 30mm thick with the top 12mm of acrylic solid surface and remaining 18mm of laminated medium density fiber board. Work surface shall be made of two different colours at same level and seamlessly joined in each section. The structure frame shall consist of extruded aluminium top and bottom horizontal beams and vertical support tensioned together to form an integrated, finished curvilinear shaped frame. Vertical & Horizontal supports, minimum 2.5mm and 2mm thick respectively, have to be provided for the structure frame. Extreme side legs shall be illuminated type and should complete the overall form and aesthetics of the desk. It shall have concealed cable & wire way management system.	
3	Desk width, depth shall be as per the drawing enclosed (DRAWING-I). CPU shall be mounted on CPU trolleys.	
4	Profiled extended support and cantilevered beam of Aluminum / steel with suspension hook (if required) to support legs to be provided which should have powder coated finish in approved color / shade.	
5	The Desk can be designed, manufactured and supplied in separate shipping sections.	

NOTE:

1. Dimensions are indicative, detailed component size and specification may be vendor specific within broad specs given above.
2. As required Nos. of 4 way, 5/15 Amps power socket strip mounted on each of the shelves.

COPYRIGHT AND CONFIDENTIAL
The information contained in this document is the property of *BHARAT HEAVY ELECTRICALS LIMITED*
This must not be used directly or indirectly, in any manner detrimental to the interest of the company

SECTION 2 – GENERAL SPECIFICATIONS

Sl. No.	Specification	Supplier's Remark
1	Finished surface to be free from waves, belies or other imperfections. Surface to be Powder Coated or if Spray painted, 2 coats of inhibitive epoxy primer surface to be applied. Paint with Minimum of 2 coats of Primer and 2 sprays of final finish color to be applied OR powder coated with epoxy paint. Exact color and shade of components will be specified at the time of Order placement. Minimum thickness for Aluminum Sheets: is 30 microns. For MS Components: is 65 microns	
2	Along with offer detailed drawings showing sectional view, top view, front view, and rear view of desks and tables, electrical wiring diagram with bill of materials for each item, and images and/or catalogue of computer chairs.	
3	Documents to be submitted for manufacturing approval: ▪ Detailed OGA with front view, top view, rear view, sectional view, and floor cut-out details for desks and tables. ▪ Electrical Wiring Diagram with BOM of HMI operator desk, draw-out consoles, synchroscope, and Two section desk. ▪ Quality Plan ▪ Color Shade options.	
4	Supplier internal Test certificate for dimensions, Visual inspection, paint, HV, IR, electrical functions to be submitted before giving inspection calls to BHEL.	
5	Inspection by BHEL / CUSTOMER at supplier's work.	
6	All items will be directly dispatched to project site from supplier works after obtaining necessary clearance from BHEL. Consignee details will be intimated at the time of placement of PO.	
7	All items shall be packed in complete weather proof packing with sufficient cushioning to avoid transit damage. Suitable pallet shall be provided for handling and transportation	
8	Name Plates with following details are to be provided for each shipping section. ▪ Item: **As per PO** ▪ Project Name / Unit no: **As per PO** ▪ Customer Name: **As per PO** ▪ BHEL Order No.: **As per PO** ▪ Date of dispatch to site: **As per PO**	
9	Assembly, erection and installation, including laying of power cables, keyboard, mouse and monitor extender cables, termination of the cables, at site to be carried out by supplier. Offer to include charges for same along with necessary touch up etc.	
10	Modifications as per site requirements to be done on free of cost to match with floor opening for cables. Site work for aligning and matching the curvature of desk as shown in enclosed drawing is under supplier scope.	
11	Warranty: Offer to include "Two years warranty at site" for all items against manufacturing defects from date of supply. Warranty to include all costs towards material, labor, to fro, traveling, accommodation and stay etc. Exact location of the project site will be intimated at the time of PO.	

Note: Supplier is required to submit the filled, signed and stamped copy of this specification along with the offer, failing which offer is liable for rejection.

Annexures:

DRAWING I – HMI FOUR SECTION (OPEN TYPE) OPERATOR DESK (4 m) drawing

COPYRIGHT AND CONFIDENTIAL
THE INFORMATION ON THIS DOCUMENT IS THE PROPERTY OF BHARAT HEAVY ELECTRICALS LTD. IT MUST NOT BE USED DIRECTLY OR INDIRECTLY IN ANY WAY DETRIMENTAL TO THE INTEREST OF THE COMPANY.

DRG. No. 3 659 44 05471

DRAWING-I

CONTROL DESK OF 4 mtrs

NOTES :

1) THE TOP SURFACE OF CONTROL DESK SHALL BE 30mm THICK WITH THE TOP 12mm OF ACRYLIC SOLID SURFACE AND THE REMAINING 18mm OF LAMINATED MEDIUM DENSITY .
2) COLOR OF TABLE TOP : AS PER APPROVAL.
3) FOOT, CANTILEVER, BEAMS, CABLE MANAGERS TO BE MADE OF EXTRUDE/CAST ALUMINIUM/CRCA LAMINATED STEEL, SUPPORT LEGS & HORIZONTAL SUPPORTS (IF REQUIRED) BELOW WORK SURFACE TO BE OF MINIMUM 2.0mm THICK. SUITABLE DIE/CAST/EXTRUDED ALUMINIUM/CRCA LAMINATED STEEL.
4) ALL ALUMINUM EXTRUSIONS WILL BE POWDER COATED IN ALUMINUM GREY
5) FRONT & BACK COVERS : PERFORATED SHEET THICKNESS 1.6mm
6) EXTREME SIDE LEGS SHALL BE ILLUMINATED TYPE AND SHOULD COMPLETE THE OVERALL FORM AND AESTHETICS OF THE DESK
7) PAINT SHADE : AS PER APPROVAL
8) DIMENSIONS ARE INDICATIVE AND SUBJECT TO CHANGE BASED ON MODEL/SUPPLIER AVAILABILITY.

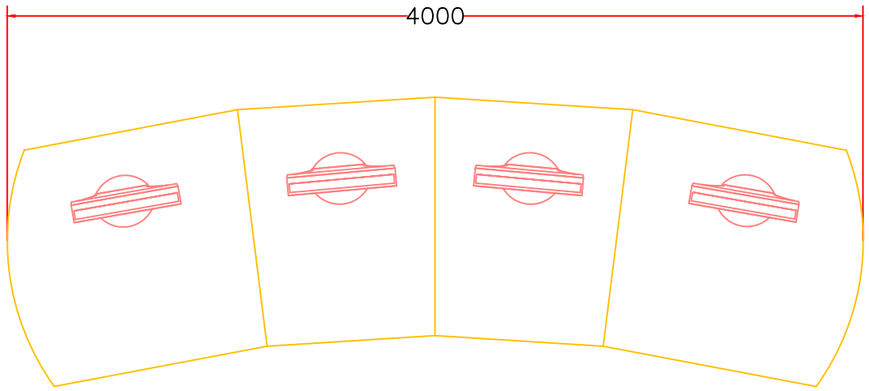

TOP VIEW

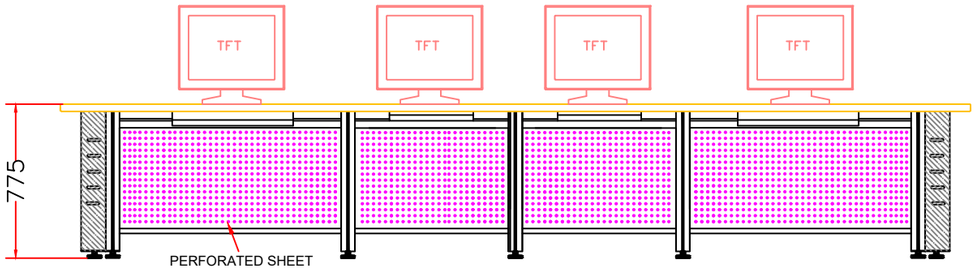

FRONT VIEW

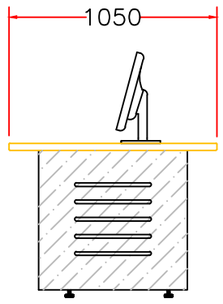

SIDE VIEW

PRODUCT : TALCHER THERMAL POWER PROJECT STG-III (2X660 MW)
CUSTOMER: M/s NTPC

BHARAT HEAVY ELECTRICALS LIMITED.
ELECTRONICS DIVISION, BANGALORE

REV.	DATE	ALTERED / CHECKED / APPROVED	REV.	DATE	ALTERED / CHECKED / APPROVED

	NAME	SIGN	DATE
DRAWN	S.H.K		21-10-2025
CHECKED	S.N		21-10-2025
APPROVED	B.N.S		21-10-2025

DEPT. ENGG | CODE 404

TITLE: OGA OF CONTROL DESK OF 4 mtrs

No. OF SHEETS 07
SHEET No. 05

WBS. No. CE/1895-PR1/2-56-01
DRG. No. 3 659 44 05471
REV 00

REF. DRG. No. 36594402806 01
SIGN. & DATE
INVENTORY No.

COPYRIGHT AND CONFIDENTIAL
The information contained in this document is the property of *BHARAT HEAVY ELECTRICALS LIMITED*
This must not be used directly or indirectly, in any manner detrimental to the interest of the company

EQUIPMENTS FOR CHP PACKAGE
FOUR SECTION (OPEN TYPE) OPERATOR DESK (4 m)
~~THREE SECTION (OPEN TYPE) OPERATOR DESK (3 m)~~

REVISION HISTORY SHEET

REV No.	DATE	NATURE OF CHANGE	REASON	PREPARED BY	CHECKED BY	REVIEWED BY
00	19.04.2017	FIRST ISSUE	---	AS	KP	KP
01	25.02.2023		Project Name removed; 3m desk with console added	SN	AS	BNS
02	20.10.2025		Console spec updated w.r.t TALCHER	SN	AS	BNS

COPYRIGHT AND CONFIDENTIAL
The information contained in this document is the property of *BHARAT HEAVY ELECTRICALS LIMITED*
This must not be used directly or indirectly, in any manner detrimental to the interest of the company

COPYRIGHT AND CONFIDENTIAL
The information contained in this document is the property of *BHARAT HEAVY ELECTRICALS LIMITED*
This must not be used directly or indirectly, in any manner detrimental to the interest of the company

PART-A

SECTION1-

1. FOUR SECTION (OPEN TYPE) OPERATOR DESK

Sl. No.	Specification	Supplier's Remark
1	Desk is required as per drawing enclosed (DRAWING-I). The desk shall be free standing top type with with **front &** back **cover** constructed of **1.6** mm thick CRCA steel plates. The desk should consist of vertical, horizontal and base support with their coverings for work surface, sliding keyboard trays, mouse pads, monitor shelf and concealed cable and wire way management, perforated trays with covers on both horizontal and vertical.	
2	The top surface of control desk shall be 30mm thick with the top 12mm of acrylic solid surface and remaining 18mm of laminated medium density fiber board. Work surface shall be made of two different colours at same level and seamlessly joined in each section. The structure frame shall consist of extruded aluminium top and bottom horizontal beams and vertical support tensioned together to form an integrated, finished curvilinear shaped frame. Vertical & Horizontal supports, minimum 2.5mm and 2mm thick respectively, have to be provided for the structure frame. Extreme side legs shall be illuminated type and should complete the overall form and aesthetics of the desk. It shall have concealed cable & wire way management system.	
3	Desk width, depth shall be as per the drawing enclosed (DRAWING-I). CPU shall be mounted on CPU trolleys.	
4	Profiled extended support and cantilevered beam of Aluminum / steel with suspension hook (if required) to support legs to be provided which should have powder coated finish in approved color / shade.	
5	The Desk can be designed, manufactured and supplied in separate shipping sections.	
6	The Desk should have a draw out console on one side of desk section for process side. Detailed specification is available in **PART-B**	

2. THREE SECTION (OPEN TYPE) OPERATOR DESK

Sl. No.	Specification	Supplier's Remark
1	Desk is required as per drawing enclosed (DRAWING-II). The desk shall be free standing top type with with **front &** back **cover** constructed of **1.6** mm thick CRCA steel plates. The desk should consist of vertical, horizontal and base support with their coverings for work surface, sliding keyboard trays, mouse pads, monitor shelf and concealed cable and wire way management, perforated trays with covers on both horizontal and vertical.	
2	The top surface of control desk shall be 30mm thick with the top 12mm of acrylic solid surface and remaining 18mm of laminated medium density fiber board. Work surface shall be made of two different colours at same level and seamlessly joined in each section. The structure frame shall consist of extruded aluminium top and bottom horizontal beams and vertical support tensioned together to form an integrated, finished curvilinear shaped frame. Vertical & Horizontal supports, minimum 2.5mm and 2mm thick respectively, have to be provided for the structure frame. Extreme side legs shall be illuminated type and should complete the overall form and aesthetics of the desk. It shall have concealed cable & wire way management system.	
3	Desk width, depth shall be as per the drawing enclosed (DRAWING-II). CPU shall be mounted on CPU trolleys.	
4	Profiled extended support and cantilevered beam of Aluminum / steel with suspension hook (if required) to support legs to be provided which should have powder coated finish in approved color / shade.	
5	The Desk can be designed, manufactured and supplied in separate shipping sections.	
6	The Desk should have a draw out console on one side of desk section for process side. Detailed specification is available in **PART-B**	

COPYRIGHT AND CONFIDENTIAL
The information contained in this document is the property of *BHARAT HEAVY ELECTRICALS LIMITED*
This must not be used directly or indirectly, in any manner detrimental to the interest of the company

NOTE:

1. Dimensions are indicative, detailed component size and specification may be vendor specific within broad specs given above.
2. As required Nos. of 4 way, 5/15 Amps power socket strip mounted on each of the shelves.

SECTION 2 – GENERAL SPECIFICATIONS

Sl. No.	Specification	Supplier's Remark
1	Finished surface to be free from waves, belies or other imperfections. Surface to be Powder Coated or if Spray painted, 2 coats of inhibitive epoxy primer surface to be applied. Paint with Minimum of 2 coats of Primer and 2 sprays of final finish color to be applied OR powder coated with epoxy paint. Exact color and shade of components will be specified at the time of Order placement. Minimum thickness for Aluminum Sheets: is 30 microns. For MS Components: is 65 microns	
2	Along with offer detailed drawings showing sectional view, top view, front view, and rear view of desks and tables, electrical wiring diagram with bill of materials for each item, and images and/or catalogue of computer chairs.	
3	Documents to be submitted for manufacturing approval: ▪ Detailed OGA with front view, top view, rear view, sectional view, and floor cut-out details for desks and tables. ▪ Electrical Wiring Diagram with BOM of HMI operator desk, draw-out consoles, synchroscope, and Two section desk. ▪ Quality Plan ▪ Color Shade options.	
4	Supplier internal Test certificate for dimensions, Visual inspection, paint, HV, IR, electrical functions to be submitted before giving inspection calls to BHEL.	
5	Inspection by BHEL / CUSTOMER at supplier's work.	
6	All items will be directly dispatched to project site from supplier works after obtaining necessary clearance from BHEL. Consignee details will be intimated at the time of placement of PO.	
7	All items shall be packed in complete weather proof packing with sufficient cushioning to avoid transit damage. Suitable pallet shall be provided for handling and transportation	
8	Name Plates with following details are to be provided for each shipping section. ▪ Item: **As per PO** ▪ Project Name / Unit no: **As per PO** ▪ Customer Name: **As per PO** ▪ BHEL Order No.: **As per PO** ▪ Date of dispatch to site: **As per PO**	
9	Assembly, erection and installation, including laying of power cables, keyboard, mouse and monitor extender cables, termination of the cables, at site to be carried out by supplier. Offer to include charges for same along with necessary touch up etc.	
10	Modifications as per site requirements to be done on free of cost to match with floor opening for cables. Site work for aligning and matching the curvature of desk as shown in enclosed drawing is under supplier scope.	
11	Warranty: Offer to include "Two years warranty at site" for all items against manufacturing defects from date of supply. Warranty to include all costs towards material, labor, to fro, traveling, accommodation and stay etc. Exact location of the project site will be intimated at the time of PO.	

Note: Supplier is required to submit the filled, signed and stamped copy of this specification along with the offer, failing which offer is liable for rejection.

Annexures:

DRAWING I – HMI FOUR SECTION (OPEN TYPE) OPERATOR DESK (4 m) drawing

~~DRAWING II HMI THREE SECTION (OPEN TYPE) OPERATOR DESK (3 m) drawing~~

COPYRIGHT AND CONFIDENTIAL
THE INFORMATION ON THIS DOCUMENT IS THE PROPERTY OF BHARAT HEAVY ELECTRICALS LTD. IT MUST NOT BE USED DIRECTLY OR INDIRECTLY IN ANY WAY DETRIMENTAL TO THE INTEREST OF THE COMPANY.

DRG. No. 3 659 44 05471

CONTROL DESK OF 4 mtrs

NOTES :

1) THE TOP SURFACE OF CONTROL DESK SHALL BE 30mm THICK WITH THE TOP 12mm OF ACRYLIC SOLID SURFACE AND THE REMAINING 18mm OF LAMINATED MEDIUM DENSITY .
2) COLOR OF TABLE TOP : AS PER APPROVAL.
3) FOOT, CANTILEVER, BEAMS, CABLE MANAGERS TO BE MADE OF EXTRUDE/CAST ALUMINIUM/CRCA LAMINATED STEEL, SUPPORT LEGS & HORIZONTAL SUPPORTS (IF REQUIRED) BELOW WORK SURFACE TO BE OF MINIMUM 2.0mm THICK. SUITABLE DIE/CAST/EXTRUDED ALUMINIUM/CRCA LAMINATED STEEL.
4) ALL ALUMINUM EXTRUSIONS WILL BE POWDER COATED IN ALUMINUM GREY
5) FRONT & BACK COVERS : PERFORATED SHEET THICKNESS 1.6mm
6) EXTREME SIDE LEGS SHALL BE ILLUMINATED TYPE AND SHOULD COMPLETE THE OVERALL FORM AND AESTHETICS OF THE DESK
7) PAINT SHADE : AS PER APPROVAL
8) DIMENSIONS ARE INDICATIVE AND SUBJECT TO CHANGE BASED ON MODEL/SUPPLIER AVAILABILITY.

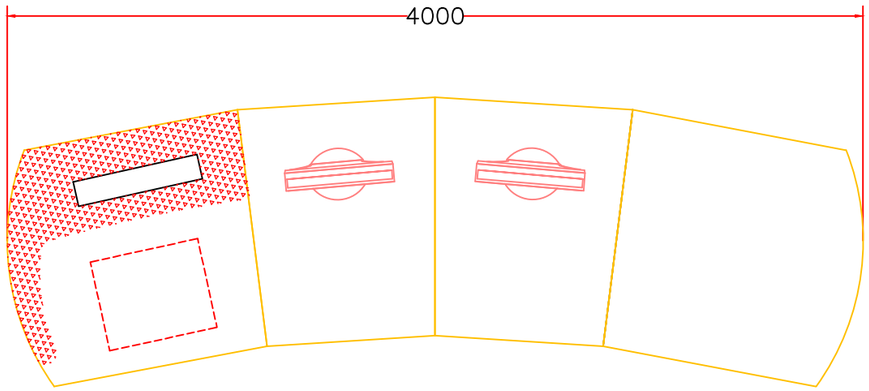

TOP VIEW

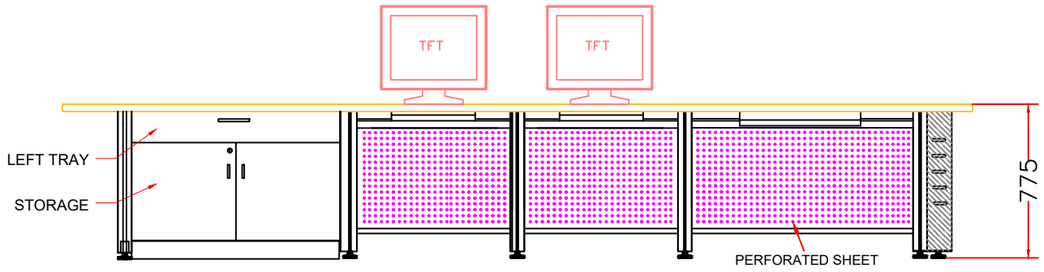

FRONT VIEW

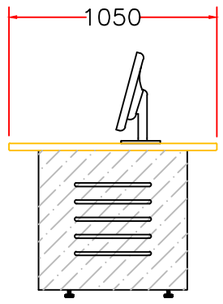

SIDE VIEW

PRODUCT : TALCHER THERMAL POWER PROJECT STG-III (2X660 MW)
CUSTOMER: M/s NTPC

BHARAT HEAVY ELECTRICALS LIMITED.
ELECTRONICS DIVISION, BANGALORE

REV.	DATE	ALTERED / CHECKED / APPROVED	REV.	DATE	ALTERED / CHECKED / APPROVED

	NAME	SIGN	DATE
DRAWN	S.H.K		21-10-2025
CHECKED	S.N		21-10-2025
APPROVED	B.N.S		21-10-2025

DEPT. ENGG | CODE 404

TITLE: OGA OF CONTROL DESK OF 4 mtrs

No. OF SHEETS 07
SHEET No. 04

WBS. No. CE/1895-PR1/2-56-01
DRG. No. 3 659 44 05471
REV 00

REF. DRG. No. 36594402806 01
SIGN. & DATE
INVENTORY No.

COPY RIGHT AND CONFIDENTIAL
THE INFORMATION ON THIS DOCUMENT IS THE PROPERTY OF BHARAT HEAVY ELECTRICALS LIMITED.
IT MUST NOT BE USED DIRECTLY OR INDIRECTLY IN ANY WAY DETRIMENTAL TO THE INTEREST OF THE COMPANY.

PURCHASE SPECIFICATIONS FOR CHP DRAW-OUT CONSOLE

PROJECT: NTPC TALCHER (2X660 MW) TPS

CUSTOMER: M/s NTPC LIMITED

COPY RIGHT AND CONFIDENTIAL
THE INFORMATION ON THIS DOCUMENT IS THE PROPERTY OF BHARAT HEAVY ELECTRICALS LIMITED. IT MUST NOT BE USED DIRECTLY OR INDIRECTLY IN ANY WAY DETRIMENTAL TO THE INTEREST OF THE COMPANY.

SPECIFICATION OF CHP DRAW OUT CONSOLES WITH ENCLOSURES OF CHP CONTROL DESK

1.0 CONSTRUCTION

1.1 The sections with draw out console shall be located on right end side of the desk sections meant for operator consoles, and shall in general, have similar constructional features, including top surface material and colour, as those of the sections meant for operator consoles. These two end section will be aligned and fixed with other desk sections, so that there is perfect match of the top surfaces. Draw out console will be constructed of 2 mm thick CRCA steel plates.

1.2 The mosaic draw-out type console shall be with a mosaic grid having 12 rows of 24 mm and 12 columns of 48 mm. Refer Drg No..: 4540-001-405-PVI-B-151A.
CHP drawout console shall be common for all the units. Total quantity of CHP drawout console is 01 number. The profile should be similar to the one provided for monitors in the operator console.

1.3 **Vendor should ensure that the draw out consoles should not protrude outside the control desk. Proper maintenance space shall be provided for access. Detailed dimensional drawing indicating all the dimensional details shall be furnished by successful bidder for BHEL review.**

1.4 The metallic mosaic grid and mosaic items to be mounted on the above consoles shall be in the scope of the supplier. These mosaic grids and items [other than what is specified under 'Notes' in the subsequent annexures], shall be from either of the following sources:
i) TEW, Germany.
ii) Pro-plan, Germany.
The overall dimensions along with framework for the required mosaic grids as specified in 1.2 above shall be clearly brought out in the offer.

1.5 The Layout drawings are subject to approval by customer - M/s NTPC. If the item/quantity shown is revised, or any additional items are added in the final approved drawing, the same to be taken care by the supplier without any financial and delivery implications. However, the total additional quantities for the implication shall be maximum 5% of the total contract quantities.

1.6 An overall general specification of all items is given in Annexure IV. However, these has to be taken in conjunction with the Drg No.: 4540-001-405-PVI-B-151A.

1.7 Necessary support arrangements as required for the consoles shall be provided by the supplier.

1.8 Below the draw-out consoles, an enclosure shall be provided in each section for housing terminal blocks with 20% spares and such other components as may be required for complete wiring of the consoles. Enclosure shall facilitate direct access to any component mounted inside and shall have at least 20% free space for future expansion.

1.9 The control desk section enclosures will have one double leaf door in the front, below the draw-out portion, and one double leaf door at the rear.

COPY RIGHT AND CONFIDENTIAL
THE INFORMATION ON THIS DOCUMENT IS THE PROPERTY OF BHARAT HEAVY ELECTRICALS LIMITED. IT MUST NOT BE USED DIRECTLY OR INDIRECTLY IN ANY WAY DETRIMENTAL TO THE INTEREST OF THE COMPANY.

1.10 The control desk drawout section will have removable gland plates made of 3.0 mm thick CRCA sheet. The gland plates shall be provided along with neoprene gasket. It should be fixed to the top flange of the bottom frame. The size of gland plates for each shipping section shall be suitably selected for easy handling.

1.11 **INTERNAL PANELS/ SYSTEM CABINETS WIRING**

1.11.1 The items to be mounted on draw-out consoles will be terminated on suitable terminal Blocks (TBs).

1.11.2 All wiring shall be with 1100V grade, single core, FRLS PVC insulated stranded copper conductor. 1100V grade Terminal Blocks shall be provided. Wires shall be vermin proof.

1.11.3 All internal wires shall be provided with tag and identification nos. etched on tightly fitted ferules at both ends. All wires directly connected to trip devices shall be distinguished by one additional red colour ferrule.

1.11.4 All external connection shall be made with one wire per termination point. Wires shall not be tapped or spliced between terminal points.

1.11.5 Each contact of each pushbutton shall be wired to dedicated TBs.

1.11.6 It has to ensured that the cables used for connection to items on the draw-out consoles should have sufficient length to facilitate full drawing out of console; without disturbing any of the terminations or damaging any of the cables or associated equipment. Cables, which terminate in cabinets of draw out sections shall have sufficient cable coiled in the bottom of the cabinet to permit full withdrawal of draw out sections without disconnecting the cables.

1.11.7 Wire sizes to be utilised for internal wiring shall be as per below table:

Sr. No.	Utility	Wire Size
i.	Current (4-20 mA), low voltage signals (48V); Pushbutton LED Modules, selector switches	0.5 Sq.mm.
ii.	Power supply and internal illumination.	1.5 Sq.mm

1.11.8 The conductor shall be composed of tinned annealed high conductivity copper wire with electrical and mechanical properties in accordance with IS:8130. The details of the conductor shall be as per Table-1.

1.11.9 The resistance of the conductor at 20° C shall not exceed the appropriate maximum value given in the Table-1. The conductor resistance measured for a length of 25 cm and compared with the resistance of the conductor without any joint shall be not more than 5 % of the resistance of adjacent conductor.

1.11.10 The insulation shall be provided with polyvinylchloride compound conforming to the requirements of type-YM1 as per VDE 0207 Part-5 & shall be of FRLS type. The average thickness of insulation shall not be less than the nominal value (ti) specified in Table-1.

1.11.11 Insulation shall be applied over the conductor by extrusion method, in such a way that it fits closely on the conductor and shall be possible to remove it easily, without damage to the conductor.

1.11.12 Joining of core insulation material is not acceptable and repair work on insulation of core also is not acceptable.

COPY RIGHT AND CONFIDENTIAL
THE INFORMATION ON THIS DOCUMENT IS THE PROPERTY OF BHARAT HEAVY ELECTRICALS LIMITED. IT MUST NOT BE USED DIRECTLY OR INDIRECTLY IN ANY WAY DETRIMENTAL TO THE INTEREST OF THE COMPANY.

1.11.13 **ELECTRICAL TESTS:**

1.11.13.1 **HIGH VOLTAGE TEST:**

- High voltage test at room temperature (Routine test) as per IS:694. The cable shall withstand an AC voltage of 3 kV (rms).
- High voltage test (Water Immersion Test-AC Test) (Type and acceptance Test) as per IS:694. The cable shall withstand an AC voltage of 3 kV (rms).
- **SPARK TEST:** IS 694, Clause 16.4 (Routine Test): Test Voltage 5 KV RMS (In process Test by manufacturer, verification of Test report by BHEL).
- Insulation Resistance: (IS:5831) (Routine) : Insulation resistance test shall be carried out at 500 volt D.C. The value of volume resistivity when calculated from the measured insulation resistance value shall not be less than $1.0X10^{13}$ Ohm-cm at 70^0C and $1.0X10^{10}$ Ohm-cm at 70^0C.

1.11.13.2 **PHYSICAL TEST ON INSULATION (Type Test):** Tensile strength, elongation at break, Heat aging, Heat shock, Shrinkage, Cold bend and Cold impact test shall meet the requirements of Type - A of IS: 5831.

1.11.13.3 **TESTS FOR FRLS PROPERTIES (Routine Test):**

Oxygen Index Test(OI): Minimum oxygen index at 25 deg C as per ASTM-D-2863.	29
Temperature Index Test: Minimum temperature Index at OI=21 calculating by method of extrapolation as per ASTM-D-2863 & BICC handbook.	250 DegC
HCl Acid Gas Estimation: Maximum acid gas generation by weight as per IEC-60754 Part I.	20%
Smoke Density Test: Maximum smoke density rating as per ASTM-D-2843.	60%
Flammability Tests: As per IEC-60332-1.	
Thermal Heat Stability Test : At 200 deg C for minimum of 80 minutes as per IEC-60811 P3.	
Swedish Chimney test as per SEN-SS 424 1475 class F3.	

COPY RIGHT AND CONFIDENTIAL
THE INFORMATION ON THIS DOCUMENT IS THE PROPERTY OF BHARAT HEAVY ELECTRICALS LIMITED. IT MUST NOT BE USED DIRECTLY OR INDIRECTLY IN ANY WAY DETRIMENTAL TO THE INTEREST OF THE COMPANY.

TABLE - 1

Sl. No	Conductor cross sectional area. nominal	Diameter of wires in conductor maximum.	Diameter of bunched conductor maximum.	Conductor resistance at 20 Deg C. maximum.	Insulation Thickness nominal	Overall dia. max	packing length per bobbin	Bobbin type
	Sq. mm	**mm**	**mm**	**ohms/KM**	**mm**	**mm**	**meters**	
1	0.50	0.21	0.93	40.1	0.6	2.5	1000	Plastic
2	0.75	0.21	1.14	26.7	0.6	2.7	1000	Plastic
3	1.00	0.21	1.32	20.0	0.6	2.8	1000	Plastic
4	1.50	0.26	1.60	13.7	0.6	3.1	500	Plastic
5	2.50	0.26	2.00	8.21	0.7	3.8	500	Plastic
6	4.00	0.31	2.60	5.09	0.8	4.8	300	Plastic/ Plywood
7	6.00	0.31	3.60	3.39	0.8	6.3	300	Plastic/ Plywood
8	10.00	0.41	4.60	1.95	1.0	7.6	100	Plastic/ Plywood
9	16.00	0.41	5.70	1.24	1.0	8.8	100	Plastic/ Plywood
10	25.00	0.41	7.10	0.795	1.2	11.0	100	Plastic/ Plywood
11	50.00	0.41	10.30	0.393	1.4	14.5	100	Plastic/ Plywood

COPY RIGHT AND CONFIDENTIAL
THE INFORMATION ON THIS DOCUMENT IS THE PROPERTY OF BHARAT HEAVY ELECTRICALS LIMITED. IT MUST NOT BE USED DIRECTLY OR INDIRECTLY IN ANY WAY DETRIMENTAL TO THE INTEREST OF THE COMPANY.

2.0 GENERAL TECHNICAL REQUIREMENTS:

2.1 In the event of P.O., the vendor is required to submit BOM with Console Layout drawings, Internal General Arrangement drawings for the internal arrangement of components & Electrical schematic drawing with wiring of all console items up to the terminal blocks and Quality plan. BOM to include the following:

- All mosaic mounted items with make/part no., inside mounted item details, datasheets of mosaic mounted items.

All the above documents are required to be submitted to BHEL within 10 days of award of contract. In case of comments from BHEL, revised document have to be resubmitted within 03 working days from receipt of comments.
All documents are required to be submitted to customer for approval.

2.2 Supplier to provide assistance at site for

a. Erection of the drawout console desk sections.
b. Any modification or alteration w.r.t addition/deletion/relocation of components and
c. Any wiring to be done at site.

Separate price to be quoted for site work of these sections. This price shall however be claimed by the vendor only on actual visit to and completion of work at site.

2.3 The panels, console/desks shall be reinforced as required to ensure true surfaces and adequate support for instruments mounted thereon. All instrument cutouts, mounting studs, and support brackets shall be accurately located. All welds on the exposed panel surfaces shall be ground smooth. Finished panel surfaces shall be free from waves, bellies, or other imperfections. Panel doors shall be 4 points hinged and shall have turned back edges and additional bracing where required to ensure rigidity. Door hinges shall be of the concealed type. Door latches shall be of the three/four -point type to ensure tight closing. Doors shall be provided with neoprene/polyurethane gasket only.

2.4 The mosaic grid tiles shall be of 24 mm x 48 mm (or 25 mm x 50 mm) size, made of heat and flame retardant, self-extinguishing and non-hygroscopic material with flat matt finish without glare and nonreflecting type.

2.5 Protection class shall be IP-42.

2.6 All the cable entries shall be from the bottom.

2.7 The drawout consoles shall be provided with a continuous bare copper ground bus. The ground bus shall be bolted to the panel structure on bottom on both sides. The bolts shall face inside of panels. All internal component grounds or common shall be connected to the system ground, which shall be fabricated of copper flat (size 50mm x 6mm & minimum length as applicable). All metallic cases of the mounted equipment shall be separately connected to the earth bus by $4.0mm^2$ copper wires. No loops in the earth wiring shall be permitted.

2.8 Terminal blocks shall be Rail mounted 1100 V AC grade Terminal blocks (Screw less cage clamp type for push button, LED wirings and Clip-on TB 10 sqmm for rest connections) with markers and 20% spare wired terminals of each type. The terminal blocks shall be located to allow easy access.

COPY RIGHT AND CONFIDENTIAL
THE INFORMATION ON THIS DOCUMENT IS THE PROPERTY OF BHARAT HEAVY ELECTRICALS LIMITED. IT MUST NOT BE USED DIRECTLY OR INDIRECTLY IN ANY WAY DETRIMENTAL TO THE INTEREST OF THE COMPANY.

2.9 Panels shall be provided with LED based illuminating lamps with door switch and six (6) point 5/15A, 240V AC universal type power sockets with switch for maintenance purposes. These switches shall be with quick make and break mechanism.

2.10 All fuses shall be fast acting semiconductor types for AC/DC supply. All the AC power supplies shall be provided with the protection of Fast acting semi conductor fuses & 2 P thermo magnetic type MCBs with C characteristic. For all the DC power supply circuits, electronic type DC MCBs shall be used only. 50 % spare fuses shall be provided with each panel, these are in additional to mandatory spares.

2.11 Miniaturized push buttons shall be provided as actuating elements to meet the functional requirements for start/stop of Motor/pump, open/close of damper/valve/ electrical breakers, safe shut down of the unit.

2.12 The drawout console shall be equipped with Anti vibration pad of min. 15 mm size thickness. Cable gland plate thickness shall be 3 mm. Base support frame height shall be min. 100 mm. Doors shall be provided with neoprene/polyurethene gasket only.

2.13 While all efforts have been made to make the specification requirement complete & unambiguous, it shall be bidders' responsibility to ask for missing information, ensure completeness of specification, to bring out any contradictory/ conflicting requirement in different sections & sub -sections of the specification and within a section itself to the notice of BHEL and to seek any clarification on specification requirement during pre-bid clarification stage. In absence of any such clarifications, in case of any contradictory requirement, the more stringent requirement as per interpretation of BHEL / Customer shall prevail and shall be complied by the bidder without any commercial / delivery implication on account of the same.

2.14 Suppliers internal test certificates for dimensions, visual, paint, HV, IR, electrical functions etc. to be submitted to BHEL before giving inspection call.

2.15 Inspection by BHEL/Customer at the vendors works. Items will be directly dispatched to project site. Details shall be intimated at the time of PO.

2.16 Drawout console will be furnished fully wired with necessary provision for internal lighting, grounding, ventilation, space heating, antivibration pads, internal piping & accessories as required for completeness of the system. The bottom of consoles shall be sealed with bottom plate and fire proof sealing material to prevent ingress of dust and propagation of fire.

2.17 Drawout consoles shall have wiring arrangement suitable for ease of termination and maintenance. For this, drawout console shall be factory wired to terminals mounted on desk.

2.18 Modification if necessitated as per site requirement, to be done at no additional cost.

2.19 Any item/work either supply of equipment or erection material which have not been specifically mentioned in but are necessary to complete the woks for trouble free and efficient operation of the plant shall be deemed to be included within the scope of this specification and shall be in bidder's scope without any commercial, technical and delivery implication to BHEL.

2.20 The drawout console shall have at least 20% free space for future expansion.

COPY RIGHT AND CONFIDENTIAL
THE INFORMATION ON THIS DOCUMENT IS THE PROPERTY OF BHARAT HEAVY ELECTRICALS LIMITED. IT MUST NOT BE USED DIRECTLY OR INDIRECTLY IN ANY WAY DETRIMENTAL TO THE INTEREST OF THE COMPANY.

2.21 SURFACE PREPARATION AND PAINTING

2.22.1 PREPARATION OF THE PAINTS :

- Before application of paint, check and ensure that the shelf life of the paint (expiry date of paint as given on the drum/ by manufacturer shall not be lapsed). Check any skin formed on the paint in the container shall be carefully removed, any settled pigment broken up and the paint thoroughly stirred.
- While stirring, ensure complete and uniform mixing of constituents. Care shall be taken to avoid entrapment of air in the paint. The paint shall be strained through a muslin cloth.
- Mix the primer and finish paints with thinner such that the consistency (viscosity) at ambient temperature when measured using Ford Cup No.4 as per IS: 101 is 30 +/- 2 seconds.

2.22.2 **SURFACE PREPARATION:** The metallic surfaces to be painted shall be given a chemical pretreatment as per below details. Items shall be painted after pretreatment with minimum time lapse. Before painting, wipe off the pre-treated surface with clean cotton cloth to remove white powdery deposit, if any.
The components to be degreased shall not have excess oil or grease. If excess oil or grease is found, components shall be wiped off using cloth prior to immersion. The components to be deoxidized/ derusted shall not have excessive rust scaling. If excessive rust/scale is present they shall be removed by emerying or items shall be segregated and treated separately considering immersion time and concentration of the bath. Initially, when the fresh bath is prepared, use the bath for 2 to 3 hours using clean dummy loads so that the bath is stabilized/ aged. Fresh chemicals shall be added to the bath after titration check to maintain specified concentration. Titration shall be done periodically according to the loading to ensure concentration. Remove the sludge at the bottom of the tank periodically.
The piece part shall be immediately dried after passivation using dry compressed air blast.
The components to be treated shall be immersed in the tanks made of steel with suitable lining with chemicals, temperature and dipping time as given below.

Sr. No.	PROCESS See Note 3	CONCENTRATION (CHEMICAL IN WATER)	POINTAGE	BATH TEMP (DEG C)	DIPPING TIME
01	DEGREASING (if hot)	3-5 % WT/VOL	27-45	80-90	10-15 MINUTES
	DEGREASING (if cold)	10-15 % WT/VOL	80-90	ROOM TEMP	10-15 MINUTES
02	RINSING IN COLD RUNNING WATER TANK WITH OVERFLOW ARRANGEMENT				
03	DERUSTING (Cold)	20-40% VOL/VOL	20-40	ROOM TEMP	10-20 MINUTES
04	RINSING IN COLD RUNNING WATER TANK WITH OVERFLOW ARRANGEMENT				
05	PHOSPHATING (Cold) See Note 1	5-6 % VOL/VOL	25-30	ROOM TEMP	20-30 MINUTES
06	RINSING IN COLD RUNNING WATER TANK WITH OVERFLOW ARRANGEMENT				
07	PASSIVATION (if hot)	0.1-0.2% VOL/VOL	Free acid: 0.1-0.2 ml per 25 ml; Total acid: 2.5 ml max per 25 ml	80-90	30-45 MINUTES
	PASSIVATION (if cold)	Same as above	Same as above	ROOM TEMP	2-3 MINUTES

COPY RIGHT AND CONFIDENTIAL
THE INFORMATION ON THIS DOCUMENT IS THE PROPERTY OF BHARAT HEAVY ELECTRICALS LIMITED. IT MUST NOT BE USED DIRECTLY OR INDIRECTLY IN ANY WAY DETRIMENTAL TO THE INTEREST OF THE COMPANY.

2.22.3 Panel exterior steel surfaces shall be ground smooth, and painted as specified below: Suitable filler shall be applied to all pits, blemishes and voids in the surfaces. The filler shall be sand blasted so that surfaces are level and flat, corners are smooth and even. Exposed raw metal edges shall be ground burr free. The entire panel surface shall be sand blasted to remove rust and scale and all other residue due to the fabrication operation. Oil grease and salts etc. shall be removed from the panels by one or more solvent cleaning methods. Alternatively 7 tank process shall be followed.

2.18.1 Two spray coats of inhibitive epoxy primer – surface shall be applied to all exterior and interior surfaces; each coat of primer surface shall be of dry film thickness of 1.5 mil. A minimum of two spray coats of final finish colour (Catalysed epoxy finish) shall be applied to all surfaces of dry film thickness 2.0mil. The final finished thickness of paint film on steel shall not be less than 75 microns. The Bidder shall also furnish sufficient touch-up paint for one complete finish coat on all exterior factory applied painted surface of each item of equipment. The finish colours for exterior and interior surfaces shall conform to the following shades:

a) Exterior for front & rear of consoles - RAL: 9002 (Structure Semi glossy finish).
b) Interior for front & rear of consoles - RAL: 9002 (Structure Semi glossy finish).
c) Interior & Exterior for Side covers of consoles - RAL: 5012 (Structure Semi glossy finish).

2.22.4 Paint films, which show sags, checks, blisters teardrops, fat edges or other painting imperfections, shall not be acceptable and if any such defects appear, they shall be repaired by and at the expenses of the Bidder.
However, if there is any change in colour and paint thickness based on customer comments, the same shall be communicated to the vendor. There shall be no change in price due to this.

2.22 **O&M Manual (No of Sets):**

- Two (2) soft copies(CDs) created in generally accepted standard computer programs (e.g. Microsoft office, Auto Cad etc.).
- Ten (10) sets of hard copies (Hard board plastic folders).

COPY RIGHT AND CONFIDENTIAL
THE INFORMATION ON THIS DOCUMENT IS THE PROPERTY OF BHARAT HEAVY ELECTRICALS LIMITED. IT MUST NOT BE USED DIRECTLY OR INDIRECTLY IN ANY WAY DETRIMENTAL TO THE INTEREST OF THE COMPANY.

3.0 PACKING DETAILS:

- Wooden packing shall be strong and efficient enough to ensure safe preservation without moisture ingress up to the final point of destination.
  - All packages should be wrapped in transparent polythene inside the crates for effective weather proofing.
  - Proper pallets and crates are to be used for packing.
  - Packing cases shall be marked to show the following:
    a. Upright position.
    b. Sling position and center of gravity position.
    c. Storage Category.
    d. Fragile components.
  - The four sides of package shall be lined from inside with packing paper water proof bitumen laminated or polyethylene sheet and tacked at suitable places. Whenever specified in addition to the bitumen laminated paper/polyethylene sheet the top cover will have a layer of bitumen felt over the cover. This should project about 100-250 mm on all sides. It is preferable to have a single piece of the above Kraft paper fixed on all four sides. In case is jointing is unavoidable, I should be done by overlapping of approximately 100 mm.
  - For Electrical and Electronic components, a rubber sheet, self-expandable polyethene foam sheet, preferable 10 mm thick, shall be fixed on the base to act as cushioning to the equipment.
  - To avoid moisture ingress and for corrosion inhibition, provide Silica gel bags/VCI powder tablets, as applicable.
  - Cover the whole equipment with polyethylene sheet of at least 100-micron thickness, on all sides preferably by a single piece.
  - To absorb shocks during transit- Thermocole/wood wool/Polyethylene air bubble film should be placed in Empty spaces / space between the material and wooden body.
  - The inner side of the top cover shall be lined with polyethylene sheet of at least 100-micron thickness, which shall project approximately 25 to 150 mm depending upon the size of the case on all sides of the top cover. This projection after nailing the top cover shall be folded over on the sides of the crates and tacked to prevent ingress of water from the top.
  - Top surface of the case shall be free from dents to prevent rain water pockets.
  - While fixing nails during packing, necessary care shall be taken to ensure that materials used for protection inside the case e.g. paper, polyethylene sheet, coir etc. do not get damaged.
  - Sling protection brackets to be provided on cases wherever required.
  - One copy of detailed packing list should be kept inside the package. One packing holder with packing list should be provided outside of the package. The packing list holder/aluminum holder should also be sealed in thick polyethylene film
- Unit 1, 2 Drawout Consoles, CHP Drawout Consoles, termination boxes should be packed separately.
- Spares should be packaged separately
- Labels should be put on the packages to identify area wise (Unit-1, 2, CHP, Termination boxes) materials.
- One copy of detailed packing list should be kept inside the package. One packing holder with packing list should be provided outside of the package. The packing list holder/aluminum holder should also be sealed in thick polyethylene film

COPY RIGHT AND CONFIDENTIAL
THE INFORMATION ON THIS DOCUMENT IS THE PROPERTY OF BHARAT HEAVY ELECTRICALS LIMITED. IT MUST NOT BE USED DIRECTLY OR INDIRECTLY IN ANY WAY DETRIMENTAL TO THE INTEREST OF THE COMPANY.

ANNEXURE – IV
LIST OF ITEMS FOR CHP DRAWOUT CONSOLE [CWD03]

Sr. No	DESCRIPTION	TOTAL QUANTITY
1.	Emergency OFF PB with red colour protective cover. Size: 48x48 mm. Contacts: 4 Changeover suitable for 24V DC with minimum contact rating of 02 Amperes. Connection with Plug-in connector. Module colour RAL 7035.	01
2.	Recessed PB module. PB colour: Grey. Size: 48x24 mm. PB's with Contacts: 2 NO. Suitable for 24V DC with minimum contact rating of 300mA. Connection with Plug-in connector. Module colour RAL 7035.	01
3.	PB module with 1 PB and 0 LEDs. Size 48X24 mm. Button colour: Red. PB's with Contacts: 2 NO. Suitable for 24V DC with minimum contact rating of 300mA. Connection with Plug-in connector. Module colour RAL 7035.	55
4.	Plug-in connectors suitable for above modules. [If connectors are different for different type of items, actual quantity of each type of connector shall be accordingly split and quoted].	As required
5.	Blank tiles Size: 48X24 mm. Module colour RAL 7035.	As required [90 numbers minimum]
6.	Mosaic Grid along with frame to house the above items 12 rows of 24 mm and 12 columns of 48 mm Module colour RAL 7035	01
7.	Crimping tool for mosaic items for making connections. [To be supplied loose].	01
8.	Removal tool for mosaic items from mosaic items. [To be supplied loose].	01

COPY RIGHT AND CONFIDENTIAL
THE INFORMATION ON THIS DOCUMENT IS THE PROPERTY OF BHARAT HEAVY ELECTRICALS LIMITED. IT MUST NOT BE USED DIRECTLY OR INDIRECTLY IN ANY WAY DETRIMENTAL TO THE INTEREST OF THE COMPANY.

Sr. No	DESCRIPTION [INSIDE MOUNTED ITEMS]	TOTAL QUANTITY
1.	Crimp contacts suitable for inserting into connectors for wiring	As required
2.	Cage clamp 8 level TBs with 2 input and 2 outputs with accessories	As required +20% spare
3.	Clip-on TB 10 sqmm with accessories.	As required +20% spare
4.	Door switches.	02
5.	LED Lamp.	01
6.	Fuse 4A with fuse base.	01
7.	HRC Link.	01
8.	Power socket 5/15A.	01
9.	Miniature Ckt. Breaker. 230/400 VAC, Double pole 6A.C-characteristic	01

NOTES:

1. Inscriptions on the mosaic tiles shall be provided as per final approved Layout drawing.
2. Internally mounted items and their quantities will be as per requirement in final approved layout.
3. Internally mounted items & their quantities are subjected to change, based on the final approved schematic diagram.
4. Total no. of connections will be approximately:
   CWD03: 400 connections.

COPY RIGHT AND CONFIDENTIAL
THE INFORMATION ON THIS DOCUMENT IS THE PROPERTY OF BHARAT HEAVY ELECTRICALS LIMITED. IT MUST NOT BE USED DIRECTLY OR INDIRECTLY IN ANY WAY DETRIMENTAL TO THE INTEREST OF THE COMPANY.

5. Cage & clamp type TBs shall be procured from following approved suppliers:

Sr. No.	Supplier	Country/Place
1.	Weidmuller	Germany
2.	Phoenix	Germany/India
3.	Wago	Germany/India
4.	Elmex	Vadodara
5.	Connectwell	Mumbai

6. 1.1 KV Control Cables (PVC, FRLS Type) shall be procured from following approved suppliers:

Sr. No.	Supplier	Country/Place
1.	Advance Cable	Bengaluru
2.	Apar Industries Ltd	Umbergaon
3.	Cords Cables	Bhiwadi
4.	CMI	Faridabad
5.	CMI	Baddi
6.	Delton Cables Ltd.	Faridabad
7.	Elkay Telelink	Faridabad
8.	Gemscabs Industries	Bhiwadi
9.	Goyoline Fibres (I) Ltd	Daman
10.	Gupta Power Cables	Khurdha
11.	Havells India Ltd.	Alwar
12.	KEC International	Silvassa , Mysore
13.	KEI Industries Ltd.	Bhiwadi
14.	Paramount Cables	Khushkhera
15.	Polycab Wires Pvt. Ltd.	Daman
16.	Ravin Cables	Pune
17.	Special Cables	Rudrapur
18.	Suyog Cables	Vadodara
19.	ThermoCables	Hyderabad
20.	Tirupati Plastomatics	Jaipur
21.	Torrent Cable Ltd	Nadiad
22.	Universal Cable	Satna

Note: The above listed vendors are subject to customer approval.

FIRST ANGLE PROJECTION

ALL DIMENSIONS ARE IN MM

DRAWING NO.

	000	002	004	006	008	010	012	014	016	018	020	022
AA												
AB		BCN-1A EM.STOP [redacted]	BCN-1B EM.STOP [redacted]	BCN-2A EM.STOP [redacted]	BCN-2B EM.STOP [redacted]		TH MCC LT TFR-1 [redacted]	TH MCC LT TFR-2 [redacted]	BKR MCC LT TFR-1 [redacted]	BKR MCC LT TFR-2 [redacted]		
AC		BCN-3A EM.STOP [redacted]	BCN-3B EM.STOP [redacted]	BCN-4A EM.STOP [redacted]	BCN-4B EM.STOP [redacted]		CH MCC LT TFR-1 [redacted]	CH MCC LT TFR-2 [redacted]	LHP GHP MCC LT TFR-1 [redacted]	LHP GHP MCC LT TFR-2 [redacted]		
AD		BCN-5A EM.STOP [redacted]	BCN-5B EM.STOP [redacted]	BCN-6(STACK.) EM.STOP [redacted]	BCN-6(RECLM.) EM.STOP [redacted]		SR-1 HT TRF EM.STOP [redacted]					
AE		CRS-1 EM.STOP [redacted]	CRS-2 EM.STOP [redacted]	CRS-3 EM.STOP [redacted]	CRS-4 EM.STOP [redacted]		MOBILE TRIPPER-1 [redacted]	MOBILE TRIPPER-2 [redacted]	MOBILE TRIPPER-3 [redacted]	MOBILE TRIPPER-4 [redacted]		
AF		CRS MCC 11KV HT INC-1 [redacted]	CRS MCC 11KV HT INC-2 [redacted]	CRS MCC 3.3KV HT INC-1 [redacted]	CRS MCC 3.3KV HT INC-2 [redacted]		PADDLE FEEDER-1 [redacted]	PADDLE FEEDER-2 [redacted]	PADDLE FEEDER-3 [redacted]	PADDLE FEEDER-4 [redacted]		
AG		CRS MCC TRF(11/3.3KV)-1 [redacted]	CRS MCC TRF(11/3.3KV)-2 [redacted]				VIBRO FEEDER-1 [redacted]	VIBRO FEEDER-2 [redacted]	VIBRO FEEDER-3 [redacted]	VIBRO FEEDER-4 [redacted]		
AH		WET DE SYS. CFL FAN-1 [redacted]	WET DE SYS. CFL FAN-2 [redacted]									
AJ										LPBP-1 TRIP [redacted]		
AK		SPARE [redacted]	SPARE [redacted]	SPARE [redacted]	SPARE [redacted]	SPARE			RELEASE			
AL		SPARE [redacted]	SPARE [redacted]	SPARE [redacted]	SPARE [redacted]	SPARE						
AM												

LEGEND:

[redacted] PUSH BUTTON RED

1 PB

BLANK TILE

LPBP-1 TRIP [redacted]

EMERGENCY OFF PB RED WITH PROTECTIVE FLAP

RECESSED PB GREY

REV. CD	DATE	ALTD HK	CKD PD	APPD PD	REV. CD	DATE	ALTD HK -SD-	CHD PD -SD-	APPD PD -SD-	REV. CD.	DATE	ALTD HK -SD-	CKD PD -SD-	APPD PD -SD-

PROJECT:	NTPC TALCHER (2X660 MW) TPS
CUSTOMER:	NTPC LTD. (A GOVERNMENT OF INDIA ENTERPRISE)
EPC CONTRACTOR:	BHARAT HEAVY ELECTRICALS LTD.

BHARAT HEAVY ELECTRICALS LTD
ELECTRONICS DIVISION
BANGALORE

DEPT CODE		NAME	SIGN	DATE
428	DRN	NST	-SD-	25.06.2025
	DESN	GS	-SD-	25.06.2025
	CHD	JK	-SD-	25.06.2025
	APPD	MS	-SD-	25.06.2025

TITLE: CHP DRAWOUT CONSOLE LAYOUT

SCALE – 1:1

DRAWING NO. 4540-001-405-PVI-B-151A

SHEET 01 OF 01 REV. 00

FORMAT SIZE A3

COPYRIGHT AND CONFIDENTIAL
The information on this document is the property of BHARAT HEAVY ELECTRICALS LIMITED
It must not be used directly or indirectly in any way detrimental to the interest of the company.

ELECTRONIC FILE NAME:

COPYRIGHT AND CONFIDENTIAL
The information contained in this document is the property of *BHARAT HEAVY ELECTRICALS LIMITED*
This must not be used directly or indirectly, in any manner detrimental to the interest of the company

PROJECT : **NTPC PROJECTS**

CUSTOMER : **M/S NTPC**

EQUIPMENTS : **WORKSTATION FURNITURE (SECTION OF 2)** PR0900006485
WORKSTATION FURNITURE (SECTION OF 1) PR0900006478
PC RACK/RACK BEHIND LVS PR0900006453
SERVER RACK PR0900006445
PRINTER RACK PR0900006437
CONFERENCE TABLE PR0900006429

COPYRIGHT AND CONFIDENTIAL
The information contained in this document is the property of *BHARAT HEAVY ELECTRICALS LIMITED*
This must not be used directly or indirectly, in any manner detrimental to the interest of the company

REVISION HISTORY SHEET

REV No.	DATE	NATURE OF CHANGE	REASON	PREPARED BY	CHECKED BY	REVIEWED BY
00	19.04.2017	FIRST ISSUE	---	AS	KP	KP
01	10.04.2023	SECOND ISSUE	PROJECT NAME CHANGED TO “NTPC PROJECTS”	SN	AS	BNS

COPYRIGHT AND CONFIDENTIAL
The information contained in this document is the property of *BHARAT HEAVY ELECTRICALS LIMITED*
This must not be used directly or indirectly, in any manner detrimental to the interest of the company

Industrial grade furniture items, as per specifications mentioned below, from reputed manufacturers/suppliers, meeting International Standards, are required for TANDA-II (2 X 660MW) Project. The desk & furniture shall be modular and latest with ease of operational features. The furniture shall be modern, aesthetically designed, modular, flexible, space saving and future safe. Each module shall have transparent cover and adjustable partition. It shall have locking provision for security. The components shall be suitable for integration/fabrication without any welding technology

Furniture as mentioned below are required:

1. Workstation furniture (section of 2) – As per **part A**
2. Workstation furniture (section of 1) – As per **part B**
3. PC rack (rack behind LVS) – As per section **part C**
4. Server rack– As per **part D**
5. Printer Rack – As per **part E**
6. Conference Table – As per **part F**

Note:

1. **General specifications are mentioned in part G of this document.**
2. **Supplier is required to submit the filled, signed and stamped copy of this specification along with the offer, failing which offer is liable for rejection.**

Annexures:

Annexure I	–	Workstation furniture (section of 2)
Annexure II	–	Workstation furniture (section of 1)
Annexure III	–	PC rack (rack behind LVS)
Annexure IV	–	Server rack
Annexure V	–	Printer rack
Annexure VI	–	Conference Table

PART - A

WORKSTATION FURNITURE (SECTION OF 2) FOR PROGRAMMER ROOM

PR0900006485

Modular workstation furniture suitable for mounting programmer stations, PC based systems, shall be as per BHEL drawing attached as Annexure – I. Brief specifications for the same are given below:

Sl. No.	Specification	Supplier's Remark
1	Design, Manufacture / Fabrication and Supply of in Position Control Room Racks as per indicative drawing (Annexure-I)	
2	It shall consists of Vertical, Horizontal and Base supports with their coverings and Work surfaces and Pullout Keyboard Trays, concealed wire way management profiled trays with covers in both Horizontal and Vertical Directions complete with clamps, adapter sleeve, switches, foot rest etc.	
3	VERTICAL SUPPORT : Support legs dimensions as per drawing in minimum 2.0 mm thick extruded / profiled aluminium / laminated steel, to hold mounting base, work surface and shelves. Side and top supports / stiffeners to be provided, as required, for strength and supporting wire ways.	
4	WORK SURFACE •Worktop of dimensions as per the drawing. It shall be made of MDF board, laminated/veneered on both sides, having minimum 25mm thickness. •Profiled Steel Support and cantilevered beam, if required, in Die Cast	

COPYRIGHT AND CONFIDENTIAL
The information contained in this document is the property of *BHARAT HEAVY ELECTRICALS LIMITED*
This must not be used directly or indirectly, in any manner detrimental to the interest of the company

	Aluminium/Steel, to support legs and pillars which are to be powder coated in approved color/shade. •Worktop to have keyboard trays of compact design with provisions for sliding, complete with mounting arrangement. •Shelves to hold the CPU to be height adjustable.	
5	Tracking light and foot rest should be provided for each section of the workstation furniture	

PART - B

WORKSTATION FURNITURE (SECTION OF 1) FOR PROGRAMMER ROOM PR0900006478

Modular workstation furniture suitable for mounting programmer stations, PC based systems, shall be as per BHEL drawing attached as Annexure – II. Brief specifications for the same are given below:

Sl. No.	Specification	Supplier's Remark
1	Design, Manufacture / Fabrication and Supply of in Position Control Room Racks as per indicative drawing (Annexure-II)	
2	It shall consists of Vertical, Horizontal and Base supports with their coverings and Work surfaces and Pullout Keyboard Trays, concealed wire way management profiled trays with covers in both Horizontal and Vertical Directions complete with clamps, adapter sleeve, switches, foot rest etc.	
3	VERTICAL SUPPORT : Support legs dimensions as per drawing in minimum 2.0 mm thick extruded / profiled aluminium / laminated steel, to hold mounting base, work surface and shelves. Side and top supports / stiffeners to be provided, as required, for strength and supporting wire ways.	
4	WORK SURFACE •Worktop of dimensions as per the drawing. It shall be made of MDF board, laminated/veneered on both sides, having minimum 25mm thickness. •Profiled Steel Support and cantilevered beam, if required, in Die Cast Aluminium/Steel, to support legs and pillars which are to be powder coated in approved color/shade. •Worktop to have keyboard trays of compact design with provisions for sliding, complete with mounting arrangement. •Shelves to hold the CPU to be height adjustable.	
5	Tracking light and foot rest should be provided for each section of the workstation furniture	

PART - C

PC RACK (RACK BEHIND LVS) PR0900006453

Sl. No.	Specification	Supplier's Remark
1	Design, Manufacture / Fabrication and Supply of in Position Control Room Racks as per drawing (Annexure-III). The PC Rack shall be provided to mount CPU's of workstation of OWS/LVS in the control room.	
2	It shall consists of Vertical, Horizontal and Base supports with their coverings and Work surfaces, wire way management profiled trays with covers in both Horizontal and Vertical Directions complete with clamps, adapter sleeve, switches, etc.	
3	VERTICAL SUPPORT : Minimum 2.0 mm thick extruded / profiled aluminium / laminated steel, to hold	

COPYRIGHT AND CONFIDENTIAL
The information contained in this document is the property of *BHARAT HEAVY ELECTRICALS LIMITED*
This must not be used directly or indirectly, in any manner detrimental to the interest of the company

	mounting base, work surface and Shelves. Side and top supports/stiffeners to be provided, as required, for strength and supporting wire ways.	
4	WORK SURFACE/SHELVES • Worktop of dimensions as per drawing. It shall be made of MDF board, laminated/veneered on both sides, having minimum 25mm thickness. Shelves should be capable of sustaining the weight of 2 workstations/PC. The surface should not deform / bend because of the weight. • Profiled steel support and cantilevered beam, if required, in Die Cast Aluminium/Steel, to support legs and pillars which are to be powder coated in approved color/shade. • Shelves to hold the CPU to be height adjustable.	
5	PC rack width and depth to be as per drawing enclosed. PC rack shall be of modular in design. Each module shall have transparent cover adjustable partition.	
6	PC rack shall have locking provision for security. The component shall be suitable for instigation/fabrication without any welding technology.	
7	For ensuring proper cooling in door closed condition, in front side & rear side, louvers in top tier and bottom tier to be provided and on rear side exhaust fans to be provided in parallel to these louvers.	

PART - D

SERVER RACK PR0900006445

Sl. No.	Specification	Supplier's Remark
1	Design, Manufacture / Fabrication and Supply of in server racks as per drawing (Annexure-IV). The Server Rack shall be provided to mount CPU's of workstations, PC based systems, servers (of rack and tower type, mini UPS etc. in programmer room. Suitable arrangement for ventilation and cooling shall be built in.	
2	It shall consists of Vertical, Horizontal and Base supports with their coverings and Work surfaces, wire way management profiled trays with covers in both Horizontal and Vertical Directions complete with clamps, adapter sleeve, switches, etc.	
3	VERTICAL SUPPORT : Minimum 2.0 mm thick extruded / profiled aluminium / laminated steel, to hold mounting base, work surface and Shelves. Side and top supports/stiffeners to be provided, as required, for strength and supporting wire ways.	
4	WORK SURFACE/SHELVES • Worktop of dimensions as per drawing. It shall be made of MDF board, laminated/veneered on both sides, having minimum 25mm thickness. Shelves should be capable of sustaining the weight of server PC, 1 KVA mini UPS and Battery, and other equipments mounted on the rack. The surface should not deform / bend because of the weight. • Profiled steel support and cantilevered beam, if required, in Die Cast Aluminium/Steel, to support legs and pillars which are to be powder coated in approved color/shade. • Shelves to hold the CPU to be height adjustable.	
5	Width and depth to be as per drawing enclosed. Server rack shall be of modular in design. Each module shall have transparent cover adjustable partition.	
6	Server rack shall have locking provision for security. The component shall be suitable for integration/fabrication without any welding technology.	
7	For ensuring proper cooling in door closed condition, in front side & rear side, louvers in top tier and bottom tier to be provided and on rear side exhaust fans to be provided in parallel to these louvers.	

COPYRIGHT AND CONFIDENTIAL
The information contained in this document is the property of *BHARAT HEAVY ELECTRICALS LIMITED*
This must not be used directly or indirectly, in any manner detrimental to the interest of the company

PART – E

PRINTER RACK PR0900006437

Sl. No.	Specification	Supplier's Remark
1	Design, Manufacture / Fabrication and Supply of in Position printer Racks as per indicative drawing (Annexure-V)	
2	VERTICAL SUPPORT : Support legs dimensions as per the drawing, in minimum 2.0 mm thick extruded / profiled aluminium / laminated steel, to hold mounting base Shelves. Side and top supports/stiffeners to be provided, as required, for strength and supporting wire ways.	
3	SHELVES • Shelves dimensions as per drawing, shall be made of MDF board, laminated/veneered on both sides, having minimum 25mm thickness. • Profiled Steel Support and cantilevered beam, if required, in Die Cast Aluminium/Steel, to support legs and pillars which are to be powder coated in approved color/shade.	
4	Paper tray to be provided as shown in drawing.	

NOTE(Applicable for Part-A to Part-E):

1. The CPU units of servers / workstations will weigh approximately 20 kgs each, miniUPS and battery together will weigh around 60 kgs totally. The design proposed should be capable of supporting the above load.
2. Dimensions are indicative, detailed component size and specification may be vendor specific within broad specs given above.
3. **As required Nos. of 4 way, 5/15 Amps power socket strip mounted on each of the shelves.**

PART – F

CONFERENCE TABLE PR0900006429

Sl. No.	Specification	Supplier's Remark
1	Design, Manufacture / Fabrication and Supply of in Position Conference with provision for accommodating 15 chairs. as per indicative drawing (Annexure-VI)	
2	It shall consists of Vertical, Horizontal and Base supports with their coverings and Work surfaces as required. Concealed wire way management profiled trays with covers in both Horizontal and Vertical Directions.	
3	VERTICAL SUPPORT : Support legs dimensions as per drawing in minimum 2.0 mm thick extruded / profiled aluminium / laminated steel, to hold mounting base and work surface. Side and top supports / stiffeners to be provided, as required, for strength and supporting wire ways.	
4	WORK SURFACE •Worktop of dimensions as per the drawing. It shall be made of MDF board, laminated/veneered on both sides, having minimum 25mm thickness. •Profiled Steel Support and cantilevered beam, if required, in Die Cast Aluminium/Steel, to support legs and pillars which are to be powder coated in approved color/shade.	

NOTE:

1. Dimensions are indicative, detailed component size and specification may be vendor specific within broad specs given above.

COPYRIGHT AND CONFIDENTIAL
The information contained in this document is the property of *BHARAT HEAVY ELECTRICALS LIMITED*
This must not be used directly or indirectly, in any manner detrimental to the interest of the company

PART – G: – GENERAL SPECIFICATIONS WHEREVER APPLICABLE

Sl. No.	Specification	Supplier's Remark
1	Finished surface to be free from waves, belies or other imperfections. Surface to be Powder Coated or if Spray painted, 2 coats of inhibitive epoxy primer surface to be applied. Paint with Minimum of 2 coats of Primer and 2 sprays of final finish color to be applied OR powder coated with epoxy paint. Exact color and shade of components will be specified at the time of Order placement. Minimum thickness for Aluminum Sheets: is 30 microns. For MS Components: is 65 microns	
2	Along with offer detailed drawings showing sectional view, top view, front view, and rear view of desks and tables, electrical wiring diagram with bill of materials for each item.	
3	Documents to be submitted for manufacturing approval: ▪ Detailed OGA with front view, top view, rear view, sectional view, and floor cut-out details for desks and tables. ▪ Electrical Wiring Diagram with BOM of racks, workstation furniture and printer racks. ▪ Quality Plan ▪ Color Shade options.	
4	Supplier internal Test certificate for dimensions, visual inspection, paint, HV, IR, electrical functions to be submitted before giving inspection calls to BHEL.	
5	Inspection by BHEL / CUSTOMER at supplier's work.	
6	**For PC and Server Rack in order to ensure proper cooling arrangement, in door closed condition, in front side & rear side, louvers in top tier and bottom tier to be provided and on rear side exhaust fans to be provided in parallel to these louvers.**	
7	All items will be directly dispatched to project site from supplier works after obtaining necessary clearance from BHEL. Consignee details will be intimated at the time of placement of PO.	
8	All items shall be packed in complete weather proof packing with sufficient cushioning to avoid transit damage. Suitable pallet shall be provided for handling and transportation	
9	Name Plates with following details are to be provided for each shipping section. ▪ Item: **As per PO** ▪ Project Name / Unit no: **As per PO** ▪ Customer Name: **As per PO** ▪ BHEL Order No.: **As per PO** ▪ Date of dispatch to site: **As per PO**	
10	Assembly, erection and installation, including laying of power cables, keyboard, mouse and monitor extender cables, termination of the cables, at site to be carried out by supplier. Offer to include charges for same along with necessary touch up etc.	
11	Modifications as per site requirements to be done on free of cost to match with floor opening for cables. Site work for aligning and matching the curvature of desk as shown in enclosed drawing is under supplier scope.	
12	Warranty: Offer to include "Two years warranty at site" for all items against manufacturing defects from date of supply. Warranty to include all costs towards material, labor, to & fro, traveling, accommodation and stay etc. Exact location of the project site will be intimated at the time of PO.	

****

ANNEXURE - I

WORKSTATION FURNITURE (SECTION OF 2)

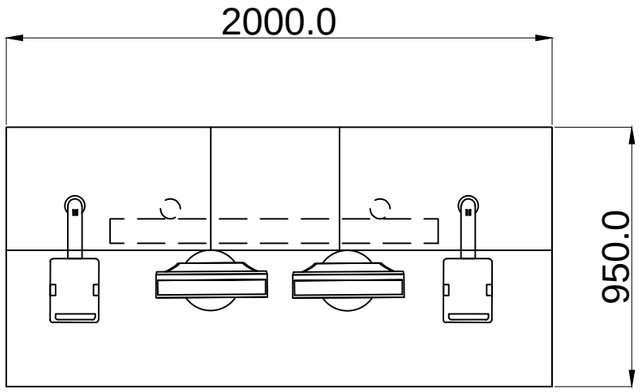

TOP VIEW

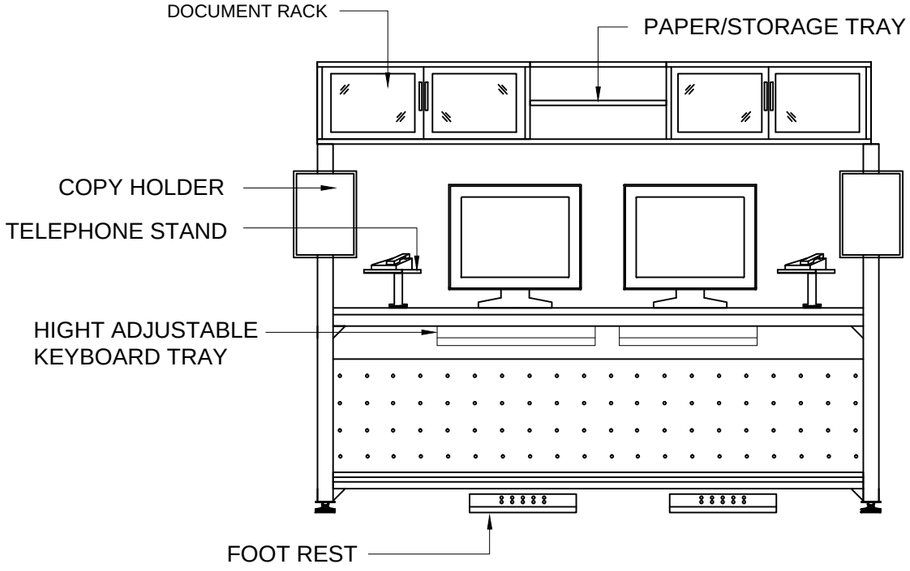

FRONT VIEW

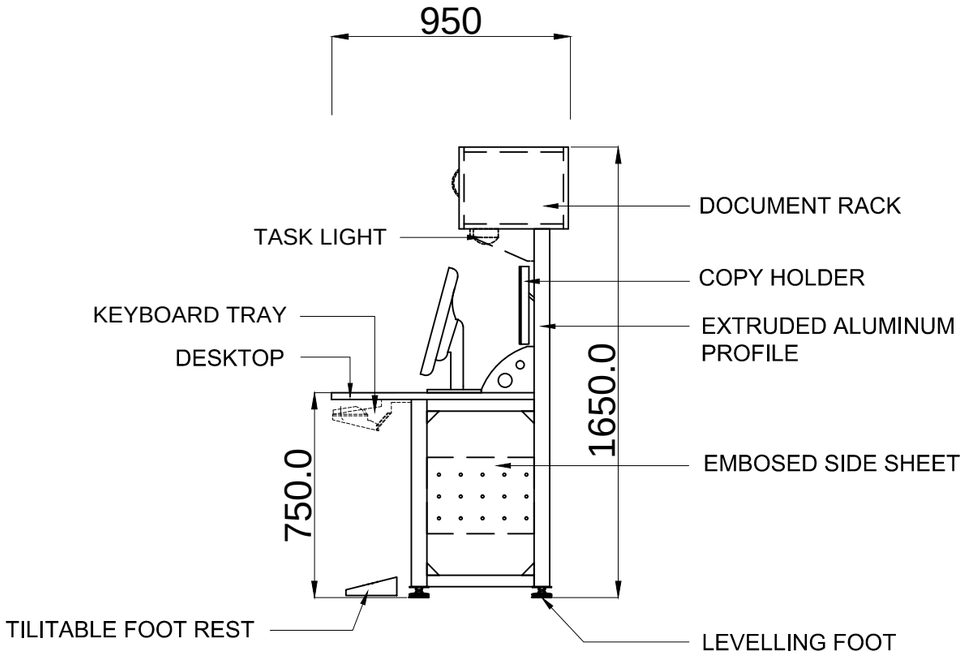

SIDE VIEW

NOTE :

1) WORK SURFACE THK : 25 MM (PARTICLE BOARD)
2) COLOR OF LAMINATE - AS PER APPROVAL
3) PAINT SHADE
   SIDE & BACK SHEET - AS PER APPROVAL
4) PAINT THICKNESS
   MS COMPONENTS : MIN. 60 MICRON
5) TOTAL ALUMINIUM EXTRUSION - CROMATISED & THEN
   POWDER COATED IN ALUMINUM GREY (RAL 9006)
6) CPU DIMENSIONS : 445(H) X 171(W) X 471(D) MM.
   UPS DIMENSIONS : 220(H) X150(W) X 410(D) MM.
   22" MONITOR DIMENSIONS : 514 (W) X 65 (D) X 306(H) MM.
   UPS & BATTERY DIMENSIONS : 250 (W) X 550(H) X 550(D) MM.
7) COLOR OF PVC EXTRUSION - RAL 5012 OR SIMILAR
8) 4 WAY SPIKE BUSTER (5/15 A RATED)
   TO BE PROVIDED FOR EACH SECTION OF WORKSTATION
9) CPU's & MONITORS ARE SHOWN FOR ILLUSTRATION
   PURPOSE ONLY, IT IS NOT PART OF THIS OGA .

ANNEXURE - II

WORKSTATION FURNITURE (SECTION OF 1)

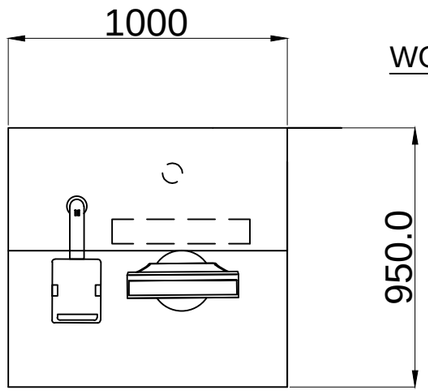

TOP VIEW

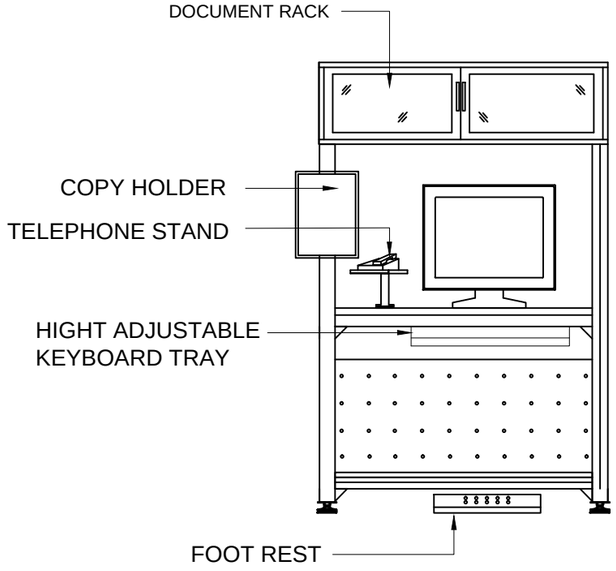

FRONT VIEW

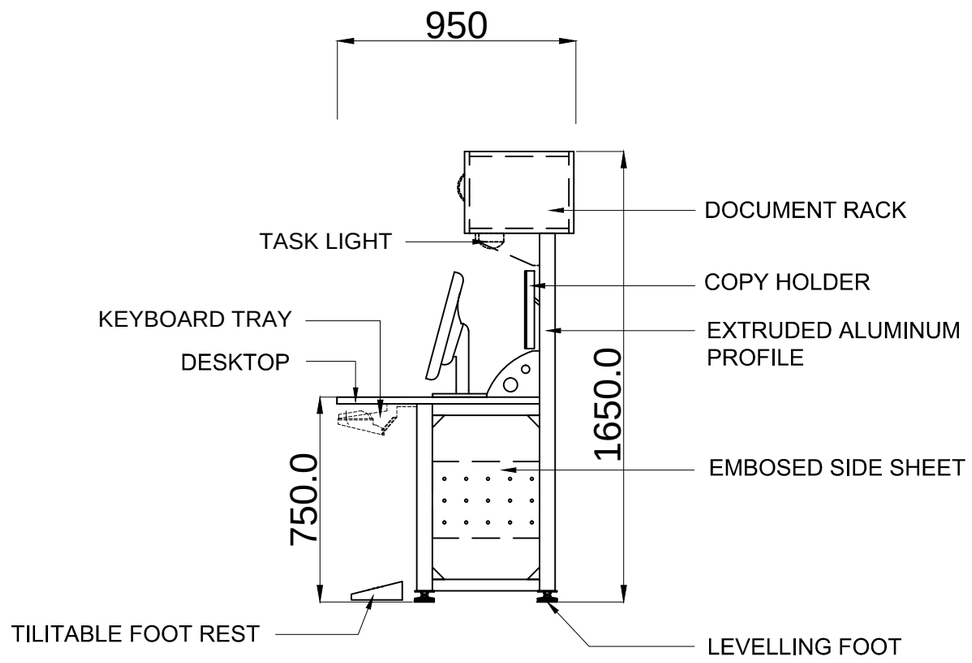

SIDE VIEW

NOTE :

1) WORK SURFACE THK : 25 MM (PARTICLE BOARD)
2) COLOR OF LAMINATE - AS PER APPROVAL
3) PAINT SHADE
   SIDE & BACK SHEET - AS PER APPROVAL
4) PAINT THICKNESS
   MS COMPONENTS : MIN. 60 MICRON
5) TOTAL ALUMINIUM EXTRUSION - CROMATISED & THEN
   POWDER COATED IN ALUMINUM GREY (RAL 9006)
6) CPU DIMENSIONS : 445(H) X 171(W) X 471(D) MM.
   UPS DIMENSIONS : 220(H) X150(W) X 410(D) MM.
   22" MONITOR DIMENSIONS : 514 (W) X 65 (D) X 306(H) MM.
   UPS & BATTERY DIMENSIONS : 250 (W) X 550(H) X 550(D) MM.
7) COLOR OF PVC EXTRUSION - RAL 5012 OR SIMILAR
8) 4 WAY SPIKE BUSTER (5/15 A RATED)
   TO BE PROVIDED FOR EACH SECTION OF WORKSTATION
9) CPU's & MONITORS ARE SHOWN FOR ILLUSTRATION
   PURPOSE ONLY, IT IS NOT PART OF THIS OGA .

ANNEXURE - III

PC RACK (RACK BEHIND LVS)

NOTE :-

1. SHELVES THK : 25 MM (MDF)
   SIDE SHEET THICKNESS - 1.6mm
2. COLOR OF LAMINATE - AS PER APPROVAL
3. PAINT SHADE
   SIDE COVER & BACK DOOR - (AS PER APPROVAL)
4. EXTREME SIDE COVERS WILL BE EMBOSSED
5. ALL ALUMINIUM EXTRUSION WILL BE POWDER COATED IN ALUMINIUM GREY.
6. WORKSTATIONS OF OWS WILL BE KEPT IN CLOSED RACK WITH GLASS DOOR (FRONT) & PERFORATED SHEET DOOR (REAR).
7. THE CPU UNITS OF SERVERS / WORKSTATIONS WILL WEIGH APPROXIMATELY 20 KGS EACH, THE DESIGN PROPOSED SHOULD BE CAPABLE OF SUPPORTING THE ABOVE LOAD

8) 4 WAY SPIKE BUSTER (5/15 A RATED) TO BE PROVIDED FOR EACH SECTION.

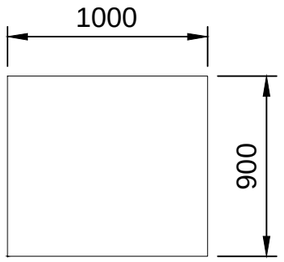

TOP VIEW

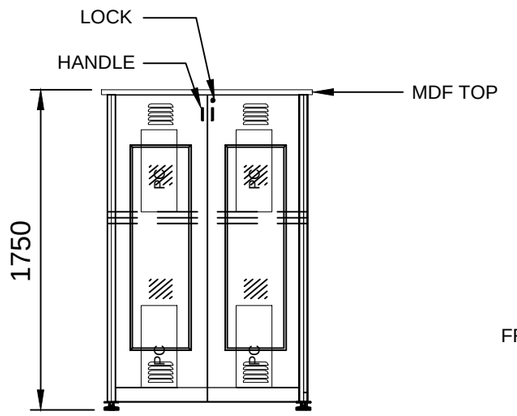

FRONT VIEW

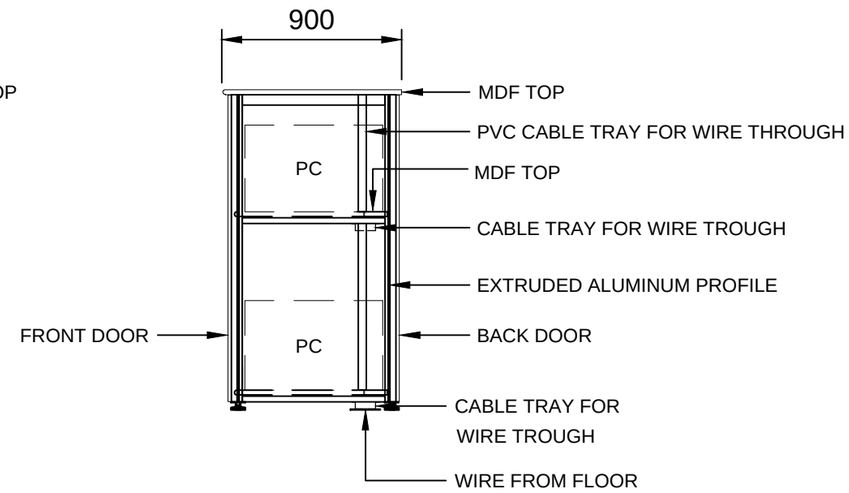

SECTIONAL SIDE VIEW

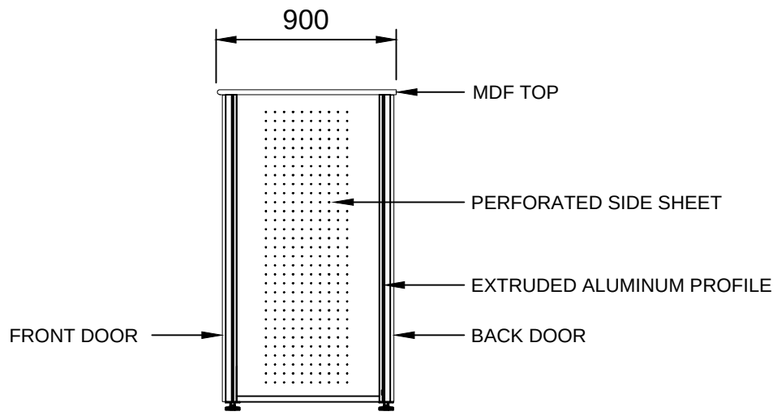

SIDE VIEW

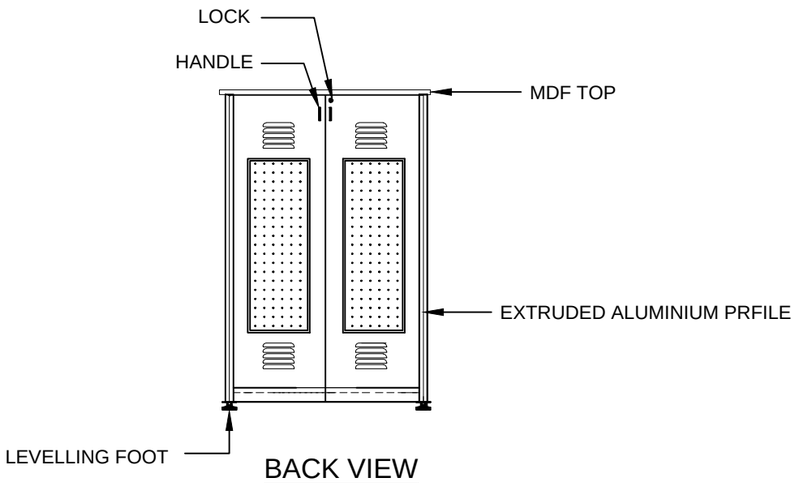

BACK VIEW

ANNEXURE - IV

SERVER RACK

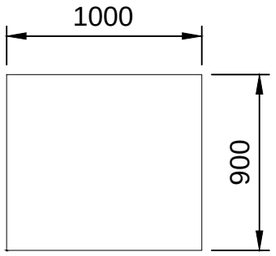

TOP VIEW

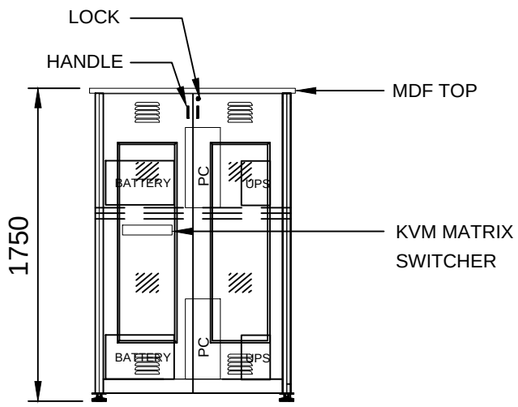

FRONT VIEW

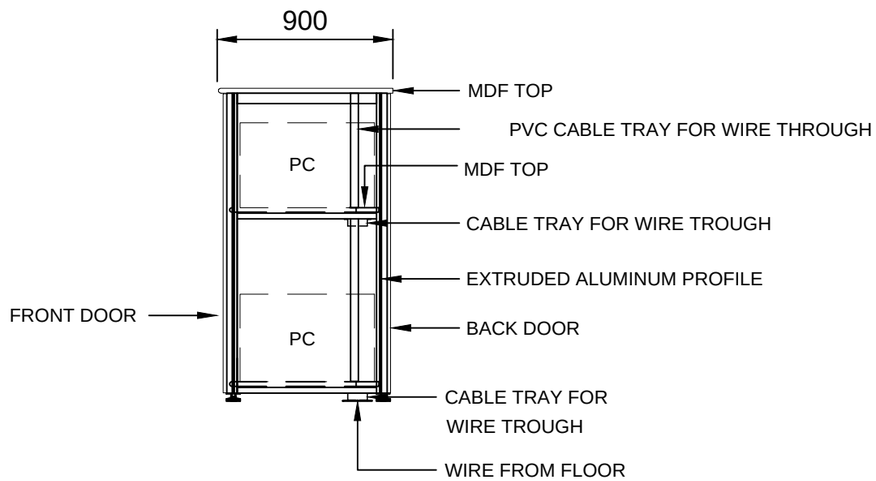

SECTIONAL SIDE VIEW

NOTE :-

1. SHELVES THK : 25 MM (MDF)
   SIDE SHEET THICKNESS - 1.6mm
2. COLOR OF LAMINATE - AS PER APPROVAL
3. PAINT SHADE
   SIDE COVER & BACK DOOR - (AS PER APPROVAL)
4. EXTREME SIDE COVERS WILL BE EMBOSSED
5. ALL ALUMINIUM EXTRUSION WILL BE POWDER COATED
   IN ALUMINIUM GREY.
6. WORKSTATIONS OF OWS WILL BE KEPT IN CLOSED RACK WITH
   GLASS DOOR (FRONT) & PERFORATED SHEET DOOR (REAR).
7. THE CPU UNITS OF SERVERS / WORKSTATIONS WILL WEIGH APPROXIMATELY
   20 KGS EACH, MINIUPS AND BATTERY TOGETHER WILL WEIGH AROUND 60 KGS
   TOTALLY. THE DESIGN PROPOSED SHOULD BE CAPABLE OF SUPPORTING
   THE ABOVE LOAD

8) 4 WAY SPIKE BUSTER (5/15 A RATED) TO BE PROVIDED FOR EACH SECTION.

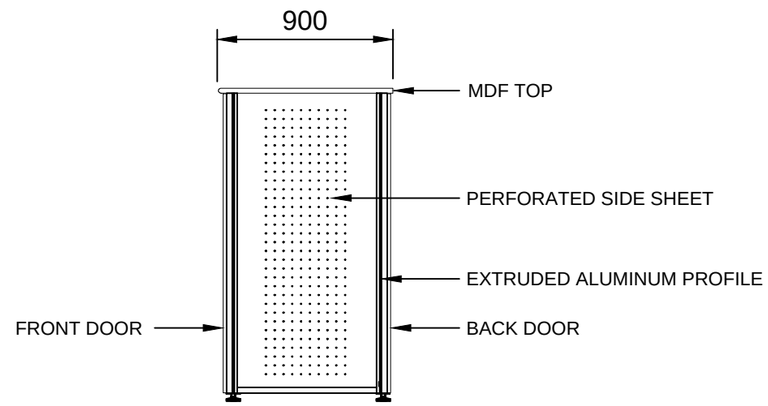

SIDE VIEW

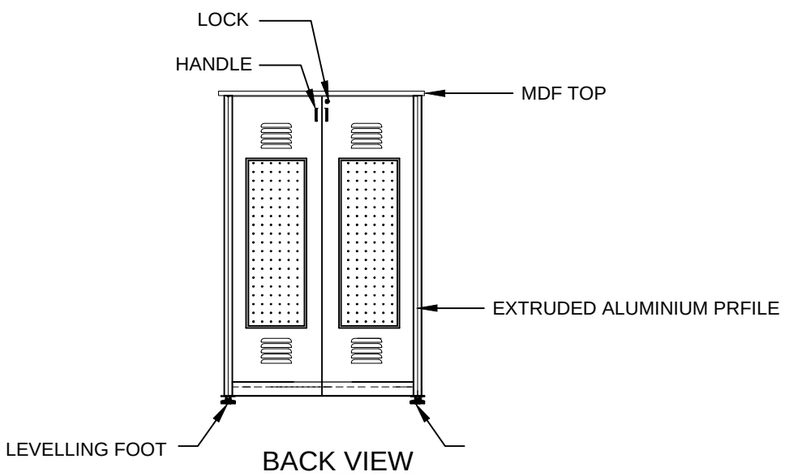

BACK VIEW

ANNEXURE -V

PRINTER RACK

NOTE :

1) SHELVES THK : 25 MM
2) COLOR OF TOP AND SIDE & HANG ON COVERS AND BACK : AS PER APPROVAL
3) ALL ALUMINUM EXTRUSIONS WILL BE POWDER COATED IN ALUMINUM GREY
4) DIMENSION ARE INDICATIVE AND SUBJECT TO SLIGHT CHANGE, VENDOR TO PROVIDE EXACT DIMENSION IN THEIR DRAWING.
5) 4 WAY SPIKE BUSTER (5/15 A RATED) TO BE PROVIDED FOR EACH SECTION.

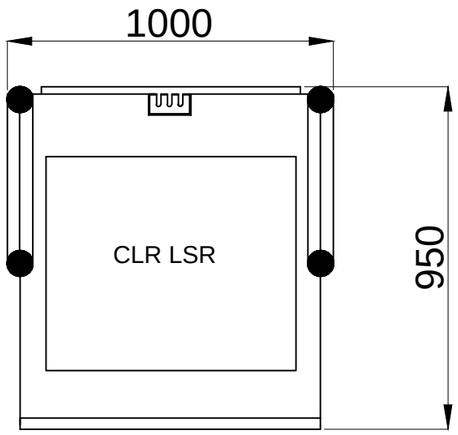

TOP VIEW

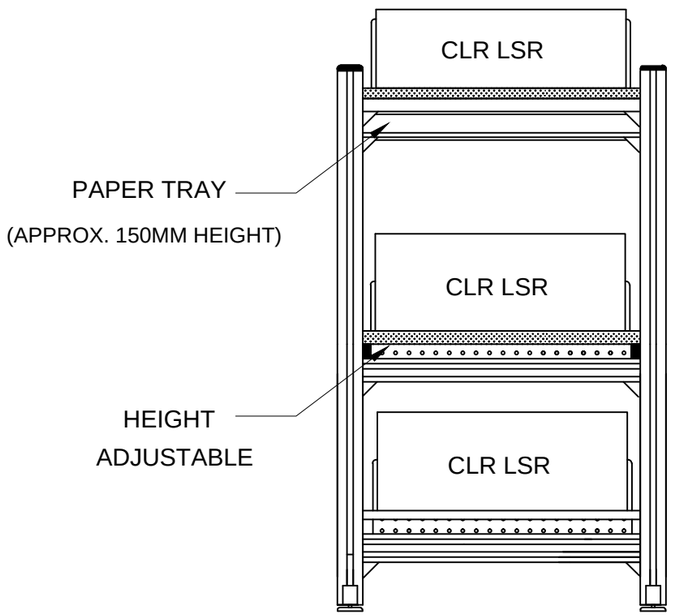

FRONT VIEW

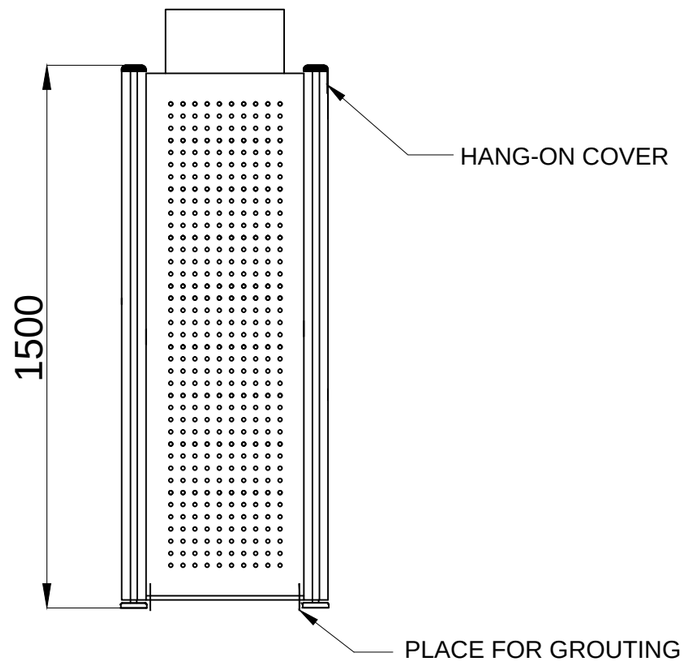

SIDE VIEW

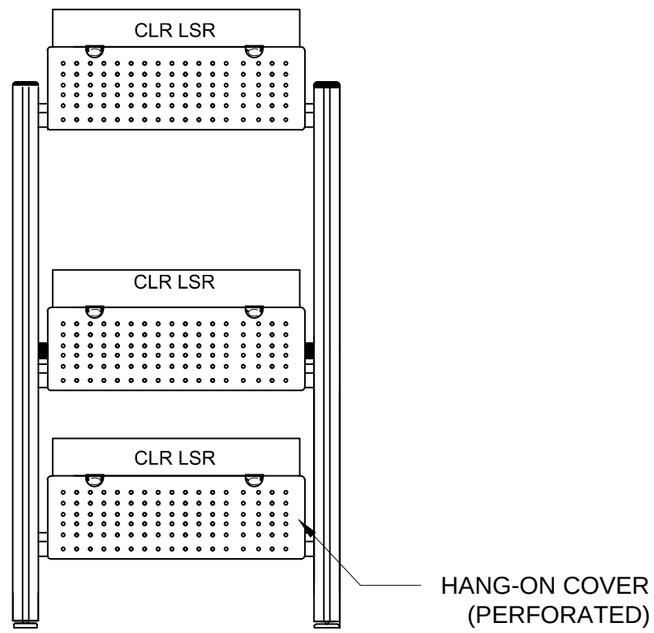

REAR VIEW

ANNEXURE - VI

NOTE :

1) Table top is made of 25mm thick MDF.
2) Color of laminate - As per approval.
3) Modesty Panel and Gable End.

CONFERENCE TABLE

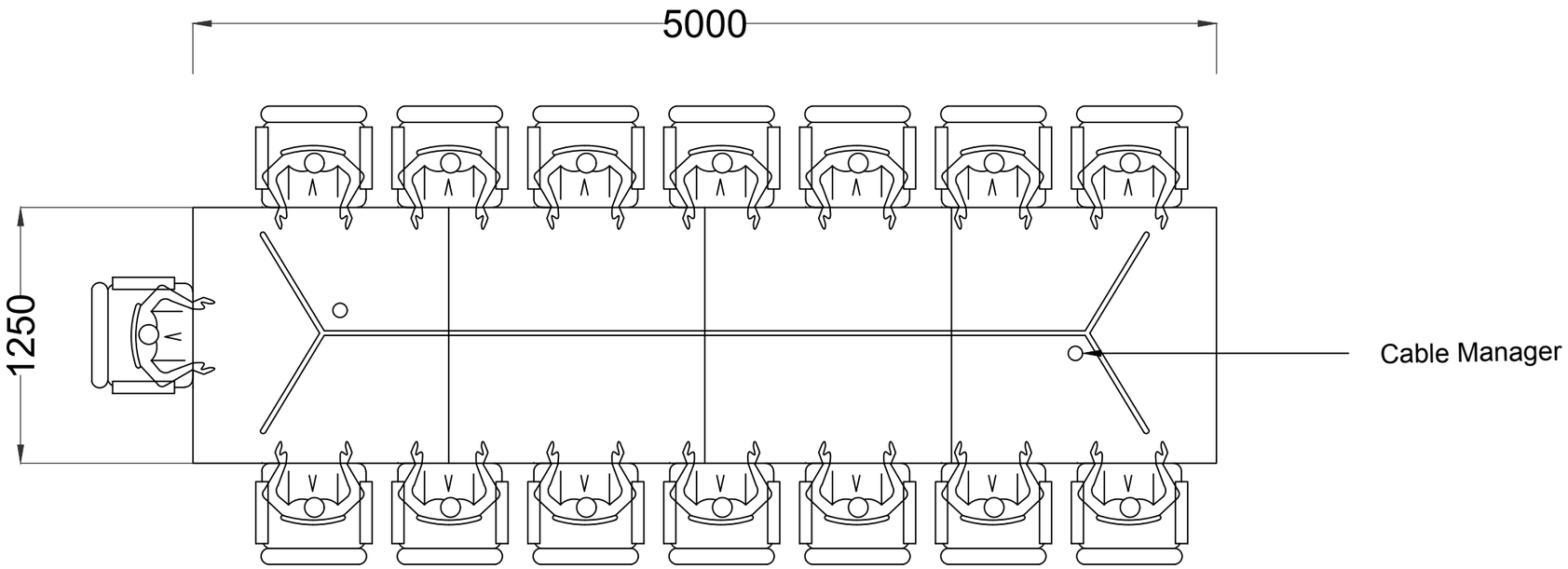

TOP VIEW

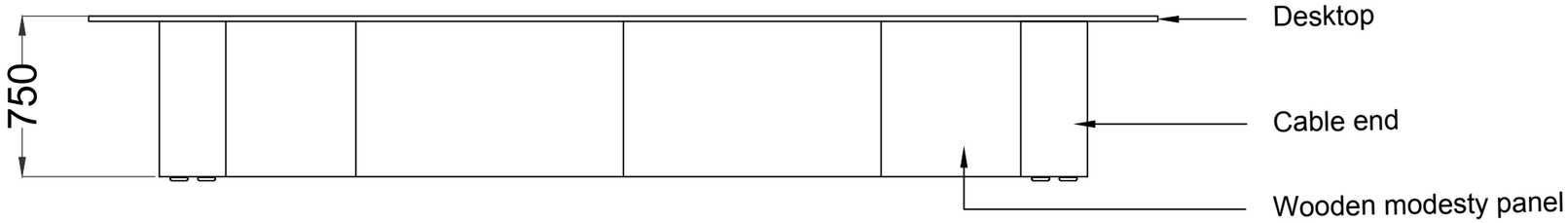

FRONT VIEW

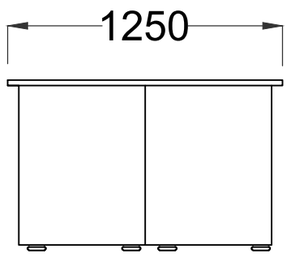

SIDE VIEW

COPYRIGHT AND CONFIDENTIAL
The information contained in this document is the property of *BHARAT HEAVY ELECTRICALS LIMITED*
This must not be used directly or indirectly, in any manner detrimental to the interest of the company

1. SPECIFICATION OF COMPUTER TABLE:

Computer Table of overall minimum dimension: 1500(W) x 750(D) x 735(H) mm and with specifications as below:

S.NO	SPECIFICATION	COMPLIANCE
1.	Table top: 25 mm thick (MDF board) of dimension 1500(W) x 750(D) mm single side post formed edge and other 3 sides PVC edge banding / flat lipping. Top and Bottom to be laminated with Top laminate minimum 0.6mm thick	YES/NO
2.	Modesty Panel and Power beam/wire manager below work surface (Modesty panel of Metal or 25 mm thick laminated MDF board with 2 mm thk PVC edge banding, Power Beam/Wire Manager of Aluminum or MS)	YES/NO
3.	Structure & Legs: AL Extruded / ERW Tubes / MS, WITH CONCEALED WIRE MANAGEMENT / WIRE CARRIERS / CABLE RACEWAYS.	YES/NO
4.	ABS PULL OUT Keyboard Tray with Mouse Pad to be mounted on underside of Table Top	YES/NO
5.	2/3 Drawer Pedestal Unit of minimum dimensions 400(W) x 445(D) x 625(H) mm	YES/NO
6.	Metal CPU Trolley. All Metal parts to be powder coated. 4 way power distribution board should be provided.	YES/NO
7.	ITEM TO BE DISMANTLED & PACKED FOR DESPATCH. DETAILED Bill Of Material & ASSEMBLY DRAWING/INSTRUCTION TO BE ENCLOSED WITH PACKAGING DURING DESPATCH. ALL NUTS, SCREWS, BOLTS, OTHER ACCESSORIES REQUIRED FOR ASSEMBLY TO BE INCLUDED. ASSEMBLY AT SITE IN VENDOR SCOPE	YES/NO
8.	Warranty: AS PER BID TERMS AND CONDITIONS	YES/NO
9.	MAKES: PYROTECH, COSMOS, HARMONY, OTS OR EQUIVALENT	MAKE:

COPYRIGHT AND CONFIDENTIAL
The information contained in this document is the property of *BHARAT HEAVY ELECTRICALS LIMITED*
This must not be used directly or indirectly, in any manner detrimental to the interest of the company

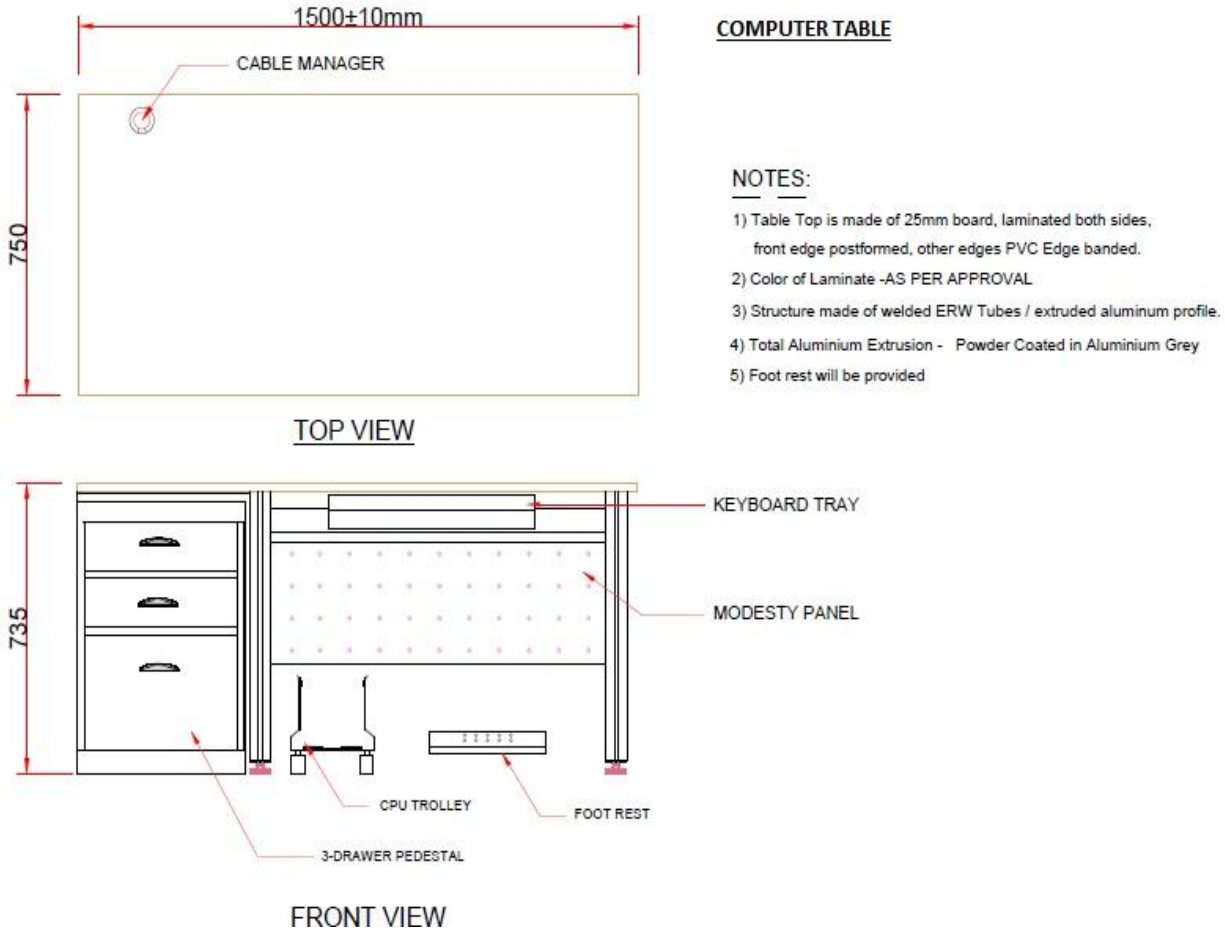

2. Documents to be submitted with offer:

All the technical catalogues drawings to be submitted along with offer.

3. Documents to be submitted after Placement of PO:

Datasheet to be submitted to BHEL for taking approval from Customer/consultant; Manufacturing Clearance will be provided after approval of datasheet by customer/consultant.

4. Warranty: AS PER BID TERMS AND CONDITIONS

5. Pre dispatch inspection:

Supplier internal Test certificate for dimensions, Visual inspection, paint, HV, IR, electrical functions to be submitted before giving inspection calls to BHEL.
Physical inspection of all the above items will be carried out by BHEL/customer after submission of Factory tested test certificate. All items will be directly dispatched to project site from supplier works after obtaining necessary clearance from BHEL.

COPYRIGHT AND CONFIDENTIAL
The information contained in this document is the property of *BHARAT HEAVY ELECTRICALS LIMITED*
This must not be used directly or indirectly, in any manner detrimental to the interest of the company

1. SPECIFICATION OF PRINTER TABLE:

Printer Table of overall Size: W 900 x D 650 x H 740 mm and with specifications as below

S.NO	SPECIFICATION	COMPLIANCE
1.	Table top: 25 mm thick (MDF board) of dimension 900(w) x 650(d) x 740(h) mm, front side post formed edge and other 3 sides PVC edge banding / flat lipping. Top and Bottom to be laminated with Top laminate minimum 0.6mm thick.	YES/NO
2.	1 No. Modesty Panel made of perforated powder coated MS sheet / both sides laminated MDF board.	YES/NO
3.	Structure & Legs: AL Extruded / ERW Tubes / MS, WITH CONCEALED WIRE MANAGEMENT / WIRE CARRIERS / CABLE RACEWAYS.	YES/NO
4.	4 way power distribution board should be provided	YES/NO
5.	ITEM TO BE DISMANTLED & PACKED FOR DESPATCH. DETAILED Bill Of Material & ASSEMBLY DRAWING/INSTRUCTION TO BE ENCLOSED WITH PACKAGING DURING DESPATCH. ALL NUTS, SCREWS, BOLTS, OTHER ACCESSORIES REQUIRED FOR ASSEMBLY TO BE INCLUDED.	YES/NO
	ASSEMBLY AT SITE IN VENDOR SCOPE	
6.	Warranty: AS PER BID TERMS AND CONDITIONS	YES/NO
7.	MAKES: PYROTECH, COSMOS, HARMONY, OTS OR EQUIVALENT	MAKE:

PRINTER TABLE

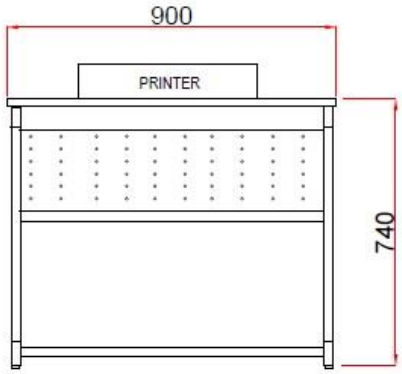

FRONT VIEW

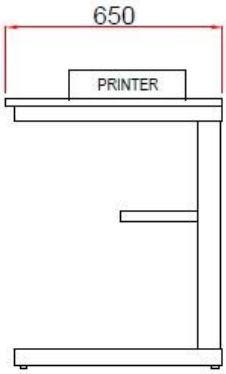

SIDE VIEW

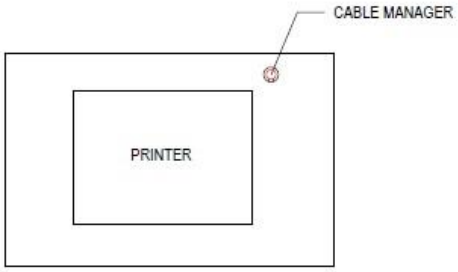

TOP VIEW

PRINTER TABLE WILL HAVE FOLLOWING FEATURES :-

(1) OVERALL MINIMUM DIMENSION 900(W) x 650(D) x 740(H) mm
(2) TABLE TOP : 25 MM THICK THICK MDF.
(3) STRUCTURE & LEGS : AL EXTRUDED / ERW TUBES / MS, WITH CONCEALED WIRE MANAGEMENT / WIRE CARRIERS / CABLE RACEWAYS.
(4) MODESTY PANEL MADE OF PERFORATED BACKSHEET
(5) POWER DISTRIBUTION BOARD WITH SOCKET & SWITCH FOR EACH SOCKET.
(6) TERMITE PROOF & WATER PROOF BOARD TO BE USED.

COPYRIGHT AND CONFIDENTIAL
The information contained in this document is the property of *BHARAT HEAVY ELECTRICALS LIMITED*
This must not be used directly or indirectly, in any manner detrimental to the interest of the company

2. Documents to be submitted with offer:

All the technical catalogues drawings to be submitted along with offer.

3. Documents to be submitted after Placement of PO:

Datasheet to be submitted to BHEL for taking approval from Customer/consultant; Manufacturing Clearance will be provided after approval of datasheet by customer/consultant.

4. Warranty: AS PER BID TERMS AND CONDITIONS

5. Pre dispatch inspection:

Supplier internal Test certificate for dimensions, Visual inspection, paint, HV, IR, electrical functions to be submitted before giving inspection calls to BHEL.
Physical inspection of all the above items will be carried out by BHEL/customer after submission of Factory tested test certificate. All items will be directly dispatched to project site from supplier works after obtaining necessary clearance from BHEL.

COPYRIGHT AND CONFIDENTIAL
The information contained in this document is the property of *BHARAT HEAVY ELECTRICALS LIMITED*
This must not be used directly or indirectly, in any manner detrimental to the interest of the company

1. SPECIFICATION FOR KEYPAD LOCKER

Keypad as per drawing below. Test Certificate to be furnished for overall dimension, Paint thickness & sheet thickness.

KEYPAD LOCKER

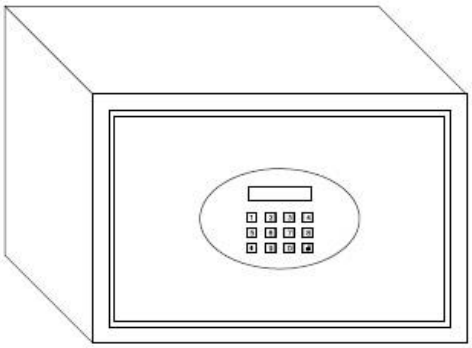

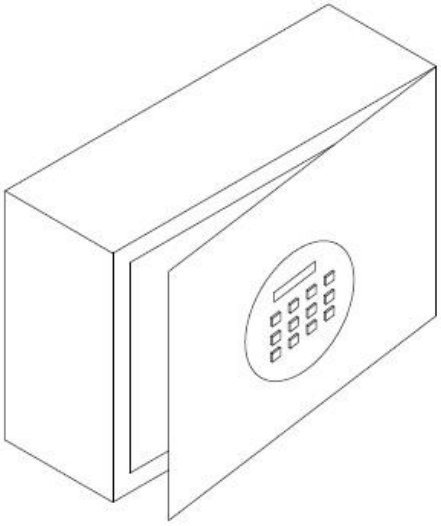

KEYPAD

1. Programmable master code of 6 digits.
2. User code can be set from 3–6 digits.
3. Keypad lock after 4 consecutive wrong codes.

Specification

External dimensions (mm) :
250 (H) X 350 (W) X 250 (D)

Net weight : 10 kg

2. **Documents to be submitted with offer:**

All the technical catalogues drawings to be submitted along with offer.

3. **Documents to be submitted after Placement of PO:**

Datasheet to be submitted to BHEL for taking approval from Customer/consultant; Manufacturing Clearance will be provided after approval of datasheet by customer/consultant.

4. **Warranty:** AS PER BID TERMS AND CONDITIONS

5. **Pre dispatch inspection:**

Supplier internal Test certificate for dimensions, Visual inspection, paint, HV, IR, electrical functions to be submitted before giving inspection calls to BHEL.
Physical inspection of all the above items will be carried out by BHEL/customer after submission of Factory tested test certificate. All items will be directly dispatched to project site from supplier works after obtaining necessary clearance from BHEL.

COPYRIGHT AND CONFIDENTIAL
The information contained in this document is the property of *BHARAT HEAVY ELECTRICALS LIMITED*
This must not be used directly or indirectly, in any manner detrimental to the interest of the company

1. SPECIFICATION OF LOCKER:

Locker as per drawing below. Test Certificate to be furnished for overall dimension, Paint thickness & sheet thickness.

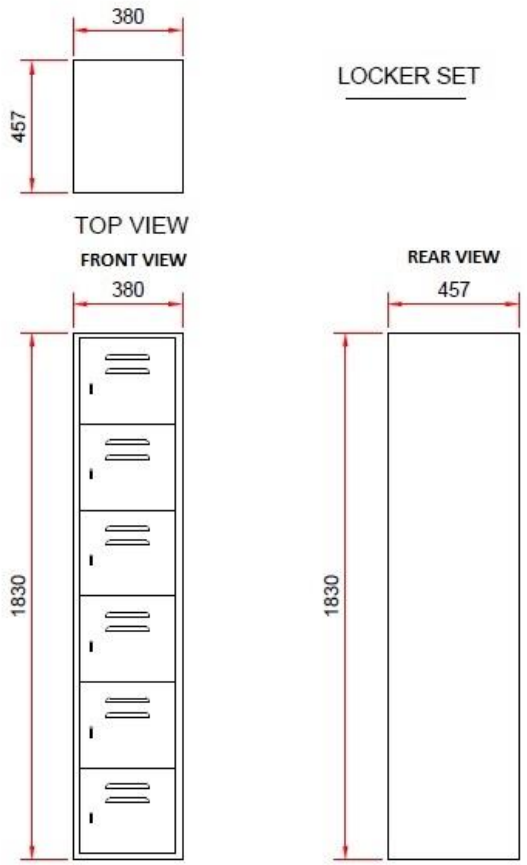

1.MATERIAL : CRCA STEEL
2. COLOR : ALUMINIUM GREY (RAL 9006)
3.LOCK REPUTED
4.OVER ALL DIMENSION
1830MM (H), 380MM (W), 457MM (D)

2. Documents to be submitted with offer:

All the technical catalogues drawings to be submitted along with offer.

3. Documents to be submitted after Placement of PO:

Datasheet to be submitted to BHEL for taking approval from Customer/consultant; Manufacturing Clearance will be provided after approval of datasheet by customer/consultant.

4. Warranty: AS PER BID TERMS AND CONDITIONS

5. Pre dispatch inspection:

Supplier internal Test certificate for dimensions, Visual inspection, paint, HV, IR, electrical functions to be submitted before giving inspection calls to BHEL.
Physical inspection of all the above items will be carried out by BHEL/customer after submission of Factory tested test certificate. All items will be directly dispatched to project site from supplier works after obtaining necessary clearance from BHEL.

COPYRIGHT AND CONFIDENTIAL
The information contained in this document is the property of *BHARAT HEAVY ELECTRICALS LIMITED*
This must not be used directly or indirectly, in any manner detrimental to the interest of the company

1. **Seat/back assembly-** The cushioned seat is assembled with plywood & upholstered seat inner material is molded foam & Polyester fabric.
2. **Net back** is made up of Back outer (Material-Glass Fiber Filled Nylon) & Back inner (material-ABS) upholstered with polyester Mesh fabric.
   * Full back size: 48 cm(W) X 59 cm(H)
   * Seat size: 50.5 cm(W) X 51 cm(D)
   Polyurethane foam: The Polyurethane foam is moulded with density = 55 +/- 2 kg/m3 and Hardness = 25 +/- 2 at 28% compression
3. **Back spine:** The support spine is made up of a glass fiber filled with PA6
   Armrests:
   *The 2-way adjustable armrests are designed to move up-down and swivel Adjustable
   *Armrest is connected to seat rest and can be operated with or without a button.
   *Swivel adjustment is provided in arm pad, Fixed to armrest structure.
   *Armpads are made up of PU molded over the plastic inner.
4. **Front pivot synchro-mechanism:**
   Single Lever Multilock Mechanism
   * Tilt tension adjustment can be operated in a seating position.
   *Lockable in 4 position
   * Seat/back tilting ratio of 3:7 (30 seat tilt / 70 back tilt).
   *The mechanism housing is made up of MS
5. **Lumbar support assembly:** Lumbar Support spine is made up of glass fiber filled fixed to back spine. The Lumbar pad (material- Poly Propylene) is fixed to lumbar spine through lumbar Pad support. Lumbar Support Assembly has height adjustment of 60mm.
6. **Pneumatic height adjustment:** The pneumatic height adjustment has an adjustment stroke of 10.0 cm.
7. **PEDESTAL ASSEMBLY:** The pedestal is High Pressure Die cast polished Aluminum and fitted with 5 nos. twin wheel castors. The pedestal pitch-center dia. is 65.0cm without castors.
8. **Twin wheel castors:** The twin wheel castors are injection moulded in black Nylon having 60mm wheel Diameter; conforming to BIFMA X5.1 standard tested to perform 1, 00,000 cycles with 253lbs. (114kg) Load

Note: These dimensions are product out to out dimension and variation within 2 cm are normal and acceptable.

Make: Godrej, Featherlite, Pyrotech or equivalent.

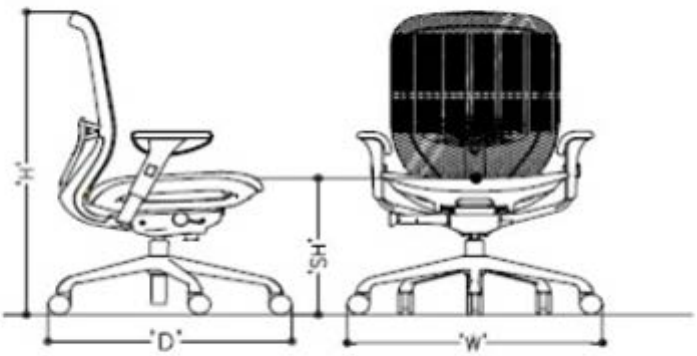

WIDTH (W): 75.0 CM.
DEPTH (D): 75.0 CM.
HEIGHT (H): 95.5–105.5 CM.
SEAT HEIGHT (SH): 44.5–54.5 CM.

COPYRIGHT AND CONFIDENTIAL
The information contained in this document is the property of *BHARAT HEAVY ELECTRICALS LIMITED*
This must not be used directly or indirectly, in any manner detrimental to the interest of the company

COPYRIGHT AND CONFIDENTIAL
The information contained in this document is the property of *BHARAT HEAVY ELECTRICALS LIMITED*
This must not be used directly or indirectly, in any manner detrimental to the interest of the company

1. SPECIFICATION OF ALMIRAH:
Almirah as per drawing below. Test Certificate to be furnished for overall dimension, Paint thickness & sheet thickness.

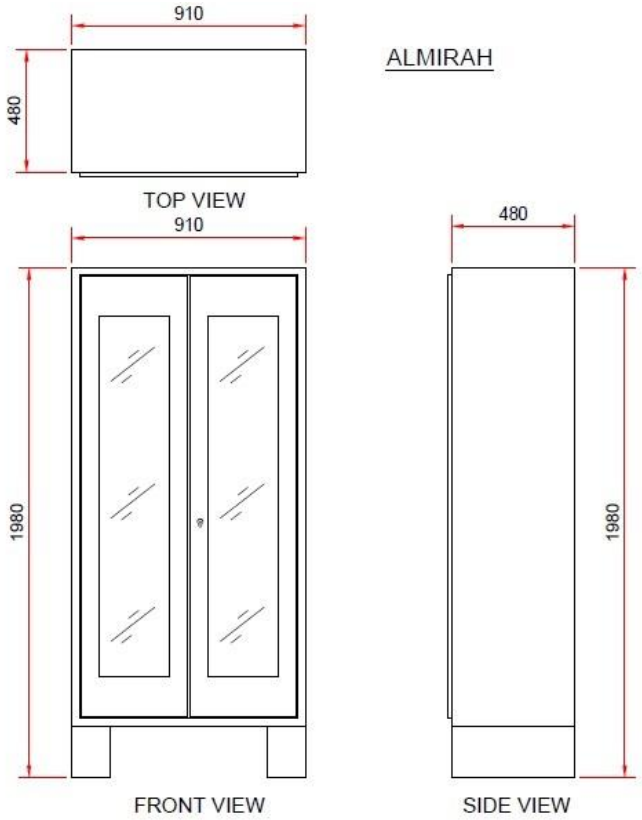

NOTE :
1. MATERIAL : CRCA STEEL
2. ALMIRAH COLOR : ALUMINIUM GREY (RAL 9006)
3. IT SHOULD BE LOCKABLE WITH INDIVIDUAL KEY
4. GLASS DOORS TO BE PROVIDED.
5. 3 WAY BOLTING ARRANGMENT WITH LOCK.

2. Documents to be submitted with offer:
All the technical catalogues drawings to be submitted along with offer.
3. Documents to be submitted after Placement of PO:

Datasheet to be submitted to BHEL for taking approval from Customer/consultant; Manufacturing Clearance will be provided after approval of datasheet by customer/consultant.
4. Warranty: AS PER BID TERMS AND CONDITIONS
5. Pre dispatch inspection:

Supplier internal Test certificate for dimensions, Visual inspection, paint, HV, IR, electrical functions to be submitted before giving inspection calls to BHEL.
Physical inspection of all the above items will be carried out by BHEL/customer after submission of Factory tested test certificate. All items will be directly dispatched to project site from supplier works after obtaining necessary clearance from BHEL.