ಭಾರತ್ ಹೆವಿ ಎಲೆಕ್ಟ್ರಿಕಲ್ಸ್ ಲಿಮಿಟೆಡ್
भारत हेवी इलेक्ट्रिकल्स लिमिटेड

Bharat Heavy Electricals Ltd.,
(A Government of India undertaking)
Electronics Division
PB 2606 , Mysore Road Bangalore , 560026 INDIA

Tender Document for " Rate contract for supply of LIE/LIR to Various Projects for 2024-25 "

TENDER REFERENCE	**NJP0000041**
TENDER DOCUMENT AVAILABLE FROM	As per https://eprocurebhel.co.in website
LAST DATE AND TIME FOR SUBMISSION OF TENDER	
DATE AND TIME FOR TENDER OPENING	
SUBMISSION OF TENDER	The bidder should submit their offer in eProcurement portal only : https://eprocurebhel.co.in

Note: Bidder to refer E-procurement portal(https://eprocurebhel.co.in) for any corrigendum, due date extension, etc. index:

This tender Document contains documents as per below Index:

INDEX

SL No.	DESCRIPTION
1	SPECIAL COMMERCIAL CONDITIONS OF CONTRACT(SCC)
2	INSTRUCTIONS TO BIDDERS
3	GENERAL COMMERCIAL CONDITIONS FOR CONTRACT
4	TECHNICAL SPECIFICATION WITH PRE-QUALIFICATION REQUIREMENTS

Contact Person at BHEL: Engineer(CE-MM-PR) Ph: 080-26998053,9591976250

ಭಾರತ್ ಹೆವಿ ಎಲೆಕ್ಟ್ರಿಕಲ್ಸ್ ಲಿಮಿಟೆಡ್
भारत हेवी इलेक्ट्रिकल्स लिमिटेड
Bharat Heavy Electricals Ltd.,
(A Government of India undertaking)
Electronics Division
PB 2606 , Mysore Road Bangalore , 560026 INDIA

CE: PR: 003- Rev 02

SPECIAL COMMERCIAL CONDITIONS OF CONTRACT

Reference is brought to BHEL's Instructions to Bidders (Document Ref: CE: PR: 001- Rev 05) and General Commercial Conditions for Contract (Document Ref: CE: PR: 002- Rev 03).

These two documents along with Special Conditions of Contract annexed to this RFQ will form an integral part of the contract as and when the RFQ culminates into a Purchase Order / Contract.

RFQ No. : **NJP0000041**
RFQ Date : As per E-procurement website
RFQ Due Date : As per E-procurement website
Customer/Project : **Rate Contract for Various project for 2024-25**
Scope Description : **Rate Contract for Supply of LIE/LIR**

Kindly submit your quotation as **two part bid** (Pre-Qualification Criteria & Techno-Commercial bid-1st part & Price bid-2nd Part) in E-Procurement System portal: https://eprocurebhel.co.in within the Due- Date of __ As per E-procurement website _____ before _ As per E-procurement website _____ hours IST and note that tenders will be opened on the same day at _ As per E-procurement website _____hours IST.

Purchase Executives: Clarifications with regard to the tender shall be addressed to purchase officers whose e-mail IDs are given below:
_____nandjee@bhel.in_____ or _____rk.pandey@bhel.in_____

Splitting of tendered quantity to MSE vendors for Purchase preference: Non-Splitable.

Destination: For Indigenous scope of supply, items are to be directly despatched to BHEL site office/stores located at __ **Will be provided at the time of placement of PO for project __** state, India. Detailed Consignee details will be issued by BHEL along with Despatch Clearance.

Terms of Delivery:

- **Indigenous scope of supply:** Ex-works, ___<indicate station of dispatch>_____ (including Packing & Forwarding charges but excluding Taxes).

Under-mentioned details shall be provided against indigenous supplies & services:

a. GSTIN of place of supply : _____

e. GeM Seller ID mandatorily required for PO placement: _____

f. MSE vendor : Yes-MSE supporting documents enclosed/No
(If MSE, supporting documents such as Udyam certificate to be enclosed)

I. Bidders to mandatorily provide confirmation/compliance for the under-mentioned terms:

SL NO.	TERMS	BHEL ACCEPTABLE TERM	BIDDER'S CONFIRMATION	REMARKS,if any
01	~~**Reverse Auction (RA)**~~	~~BHEL shall be resorting to Reverse Auction (Guidelines as available on http://www.bhel.com/index.php/vender) for this tender. RA shall be conducted among all the techno-commercially qualified bidders.~~ ~~Price bids of all techno-commercially qualified bidders shall be opened and same shall be considered as initial bids of bidders in RA. In case any bidder(s) do(es) not participate in online Reverse Auction, their sealed envelope price bid along with applicable loading, if any, shall be considered for ranking.~~	~~AGREE~~	
03	**Delivery Period**	Within _10_ weeks from the date of issue of Manufacturing clearance along with approved document. Delay in contractual delivery will attract Penalty as per GCC Clause no.:04.b. Manufacturing clearance will be provided project wise as per latest site delivery schedule. Project wise tentative delivery schedule is enclosed as Annexure-I to SCC.	AGREE …… weeks	
04	**Terms of Payment at the time of material supply**	Refer Clause "F" of Instructions to Bidder for BHEL standard Payment terms and loading factors applicable for non-compliance against payment terms: **Indigenous Scope :** b)Supply only	AGREE	
05	**Declaration of local content :** The 'Class-I local supplier' shall be required to indicate percentage of local content and provide certification that the item offered meets the local content requirement for 'Class-I local supplier'.	'Local content' means the amount of value added in India which shall, unless otherwise prescribed by the Nodal Ministry, be the total value of the item procured (excluding net domestic indirect taxes) minus the value of imported content in the item (including all customs duties) as a proportion of the total value, in percent. {'Class-I local supplier' means a supplier or service provider, whose goods, services or works offered for procurement, has local content equal to or more than 50%, as defined under Public procurement order no.P-45021/2/2017-PP (BE-II) dt: 16.09.2020 and Revision dt.19-07-2024 In the event of any Nodal Ministry prescribing higher or lower margin of purchase preference and/or higher or lower percentage of local content in respect of this procurement, same shall be applicable}.' (Refer Clause 'A' Sl. No. 12 of Instructions to Bidders). The bidder shall give self- certification for local content in the quoted items at the time of tendering.	Percentage of local content : _____% Details of the Location(s) at which the local value addition is made : _____	

		However, at the time of execution of the project, for all contracts above INR 10 Crore, the contactor/ supplier shall be required to give local content certification duly certified by cost/chartered accountant in practice, within 30days from the date of released of LOI by BHEL. In case the contractor/ supplier does not meet the stipulated local content requirement and the category of the supplier changes from Class-I to Class-II/Non-local or from Class-II to Non-local, a penalty upto 10% of the contract value may be imposed. However, contract once awarded shall not be terminated on this account.		
06	Declaration as a Compliance of Restrictions under Rule 144 (xi) of GFR 2017 as per DOE Order (Public Procurement No.4) dated 23.02.2023 (as amended from time to time)	The below declaration is to be submitted on Company Letter head duly signed and sealed by authorised signatory, for ascertaining the eligibility of offer in the tender. "I have read the clause regarding restrictions on procurement from a bidder of a country which shares a land border with India; I certify that our firm is not from such a country or, if from such a country, has been registered with the Competent Authority. I hereby certify that our firm fulfils all requirements in this regard and is eligible to be considered." (Refer Clause 'A' Sl. No. 13 of Instructions to Bidders).		

II. **<u>Bidder to note that Deviations shall not be permitted for the below mentioned terms and are deemed to be complied. In case of non-compliance/deviation, offer shall be liable for rejection:</u>**

(1) **Submission of documents post PO viz., drawings /data sheet etc. as indicated in Cl: 04 of GCC:** Within _02_ weeks from the date of receipt of Purchase Order. Delay in submission of complete set of specified documents in NIT, will attract Penalty as per GCC Clause no.:04.a.

(2) **Validity:** The offer will be valid for a period of _90_ days from the date of part-I bid opening and in case of Negotiation/ Counter-offer/RA, price validity will apply afresh for a period of _60_ days from the date of according final price by bidder (or) up to original validity period, whichever is later.

(3) **Warranty:** _24_ months from the date of dispatch of goods.

(4) **Despatch Documents:** Complete set of despatch documents (original + 1 photocopy set) as per Purchase Order shall be forwarded to Purchase Executive/BHEL directly. Depending upon the project/customer demands, Despatch documents may include one (or) more documents from the following:
Invoice (01 original and 01 copy with original sign & seal / digitally signed invoice), Lorry Receipt (L/R), Packing List, insurance intimation letter, Warranty Certificate, E-way bill, and original POD (Proof of Delivery) on L/R.
The precise list of despatch documents needed for the project will be specified in the Purchase Order.
One set of Invoice, Packing List, Lorry Receipt (or) AWB/BOL shall be e-mailed immediately to BHEL-EDN at the time of despatch.
<u>Note</u>: Detailed Packing List should indicate package-wise content details and also Net & Gross weight of each package.

(5) **Freight Charges (for indigenous scope of supply):** Freight charges shall be to vendor's account. Bidder to quote reasonable Freight charges in percentage of the total basic material cost with applicable tax, in price bid. List of tentative project wise BOM is provided in purchase specification.

(6) **Evaluation criteria to determine L1 bidder**: Items will not be split on item-wise lowest offer. Evaluation of the lowest bidder will be done as a combined package basis.

(7) **Additional terms and conditions:**

i. This is for entering into a Rate Contract for Supply of above items for various projects, which shall remain valid for a period of One year from the date of LOI (Letter of intent).

ii. Quantity indicated in the RFQ is based on BHEL' S projected requirement over the next one year. L1 evaluation will be done as a package for the total estimated BOM provided in specification on total cost to BHEL basis. Project wise POs will be placed on the L1 vendor for the required BOM of project, as and when requirement arises, with unit prices as per rate contract, limited to total rate contract value, during the tenure of this rate contract. Quantity variation for PO placements shall be +25% for each line item limited to total rate contract value.

iii. For those projects where the rate contracted L1 vendor is not approved by customer, separate procurement action will be initiated.

iv. Rates and other terms and conditions agreed upon shall remain firm till the completion of tenure of rate contract or until the purchase order is executed / completed in all respects, whichever is later.

(8) **Integrity Pact: Integrity Pact:** Execution of Integrity Pact is applicable for this tender (Refer clause "K" of Instructions to Bidders). The IP as enclosed with the tender is to be submitted (duly signed by authorized signatory who signs in the offer) along with techno-commercial bid. Only those Bidders who have entered into such an IP with BHEL would be competent to participate in the bidding. In other words, entering into this Pact would be a preliminary qualification.

(9) **Erection and Commissioning charges:** Not applicable
(10) **Erection Supervision and Commissioning charges:** Not applicable
(11) **Comprehensive Annual Maintenance Contract:** Not applicable
(12) **Performance security**: Not Applicable
(13) **EMD/Bid security**: Not Applicable
(14) **Price variation clause:** PVC clause is applicable as per PVC annexure to SCC.

With this, we hereby confirm that all the terms & conditions as indicated in Instructions to Bidders (Document Ref: CE: PR: 001- Rev 05) & General Commercial Conditions for Contract (Document Ref: CE: PR: 002- Rev 03) are accepted without any deviation.

Vendor's Signature with Seal

PVC annexure to SCC

Price Variation Formula

Material Cost in LIE/LIR/TTE pricing is considered as 60%. PVC Formula for being a Rate Contract, PVC Will be applicable on 60% of Basic rate.LIE/LIR Made from steel. Hence Iron Ore price considered from whole sale price Index (WPI) from government website www.eaindustry.nic.in .

PVC Formula: **P=Po+Po*0.60 * {(SS-SSo)/SSo}**

P=Price payable as adjusted in accordance with above appropriate formula

Po=Price quoted/confirmed

SS=Wholesale Price Index (WPI-Base Year: 2011-12) of Commodity "Iron Ore" from Government Website www.eaindustry.nic.in, as applicable for the month, three(3) months prior to the date on which item is notified as being ready for inspection.

The date for which Inspection call is along with test certificates, as proof of completion of manufacturing will be treated as date of deemed delivery.

SSo=Whole sale Price Index (WPI-Base Year-2011-12) of Commodity "Iron Ore" from Government Website www.eaindustry.nic.in, as applicable for the month, three(3) months prior to the date of issue of tender enquiry.

2. PVC shall be applicable for Order Qty. and subsequent lots (if any) till completion of requirement.

3. The positive/upward price variation shall be limited to +20% per annum from the initial price base date and –ve price variation shall be unlimited.

4. PVC shall be payable within agreed contractual delivery period. In case of delay is attributable to vendor, for the payment purpose, the PVC shall be calculated based on rates applicable on the first working day of month one month prior to contractual delivery expiry date or the first working day of month, one month prior to the date on which item is notified as being ready for inspection, whichever is beneficial to BHEL.

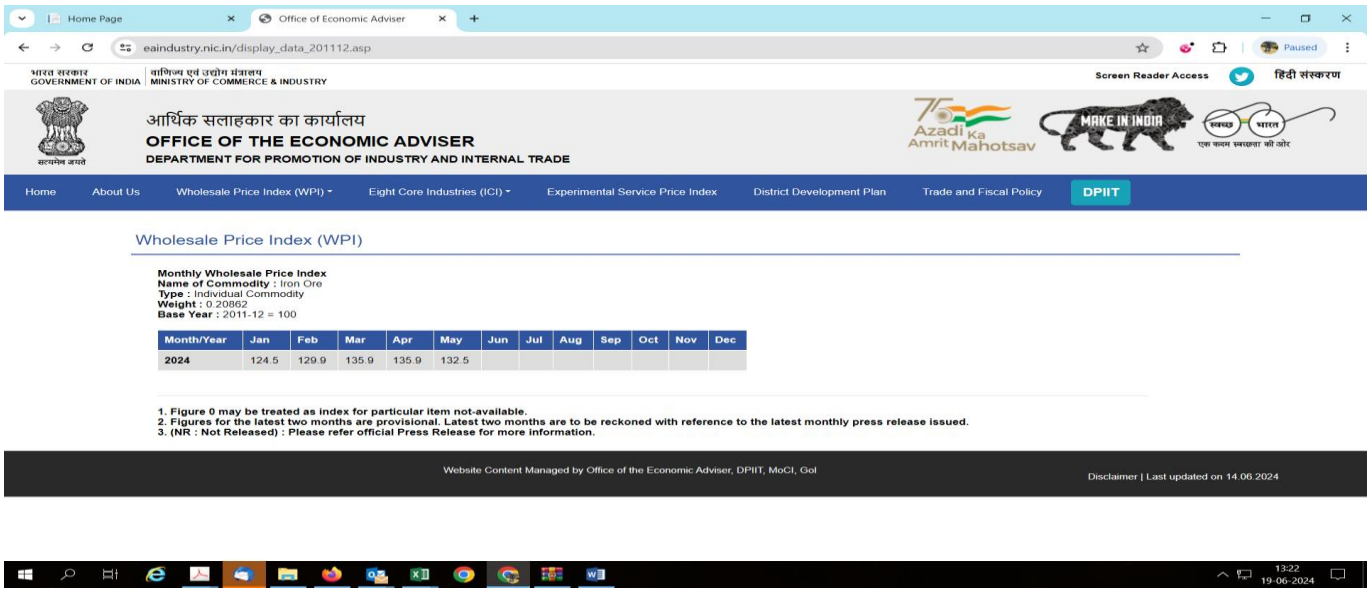

Vendor's Signature with Seal

Annexure-I

S.No	NTPC Project	Tentative Delivery Dates
1	NTPC Talcher 2 X 660MW STPP	30.09.2025
2	NTPC Korba Stage I (3 X 200MW) and Stage-II (3 X 500MW) & Stage-III (1 X 500MW)TPS	30.12.2024
3	NTPC Kahalgoan Stage I (4 X 200MW) and Stage-II (3 X 500MW)	30.12.2024
4	NPGCL Nabinagar 3 X 660MW STPP FGD Packag	Unit# 1- 30.12.2024, Unit# 2- 30.06.2025, Unit#3-30.10.2025.
5	BRBCL Nabhinagar 4 X 250MW TPS FGD Package	Unit# 1- 30.12.2024, Unit# 2- 30.06.2025, Unit#3-30.10.2025, Unit#3-30.12.2025..
6	NTPC Barh Stage II 2 X 660M W STPP FGD Package	Unit# 1- 30.03.20.25, Unit# 2- 30.10.2025.
7	PVUNL Patratu 3 X 800MW STPP FGD Package	Unit#1- 30.12.2024, Unit# 2- 30.03.20.25, Unit# 3- 30.10.2025.
8	NTPC Sipat 2 X 500MW TPS STAGE II FGD Package	30.12.2024

S.No	Non NTPC Projects	Tentative Delivery Dates
1	TSGENCO Yadadri 5 X 800MW STPP FGD Package	30.03.2025.
2	TSGENCO Kothagudm FGD 1 X 800MW STPP	30.03.2025.
3	TSGENCO Bhadradri FGD 4 X 250MW STPP	30.03.2025.
4	MEL Adani Bhandura 2 x 800 MW STPP	Unit#1 - 30.06.2025, Unit#2 - 30.10.2025
5	Adani Raigarh 2 x 800 MW STPP	Unit#1 - 30.06.2025, Unit#2 - 30.10.2025

ಭಾರತ್ ಹೆವಿ ಎಲೆಕ್ಟ್ರಿಕಲ್ಸ್ ಲಿಮಿಟೆಡ್
भारत हेवी इलेक्ट्रिकल्स लिमिटेड
Bharat Heavy Electricals Ltd.,
(A Government of India undertaking)
Electronics Division
PB 2606 , Mysore Road Bangalore , 560026 INDIA

CE:PR:001- Rev 05

INSTRUCTIONS TO BIDDERS

Bidder is requested to read the instructions carefully and submit their quotation taking into consideration of all the points:

A. GENERAL INSTRUCTIONS:

1. Any Purchase Order resulting from this enquiry shall be governed by the Instructions to Bidders (document reference: CE: PR: 001 – Rev 05), General Conditions of Contract (document reference: CE: PR: 002 - Rev 03) and Special Conditions of Contract, if any, of the enquiry. If any term mentioned in Special Conditions of Contract (SCC) contradicts relevant clause in either Instructions to Bidders (ITB) or General Conditions of Contract (GCC), the term mentioned in SCC will supersede the corresponding term in ITB / GCC.
2. Any deviations from or additions to the "General Conditions of Contract" or "Special Conditions of Contract" require BHEL's express written consent. The general terms of business or sale of the bidder shall not apply to this tender.
3. Regret letter (either through post or by mail or by EPS) indicating reasons for not quoting must be submitted without fail, in case of non-participation in this tender.

   Supplier shall be liable for removal as a registered vendor of BHEL when the supplier fails to quote against four consecutive tender enquiries for the same item or all enquiries in last two years for the same item, whichever is earlier.
4. Procurement directly from the manufacturers is preferred. However, if the OEM/ Principal insist on engaging the services of an agent, such agent shall not be allowed to represent more than one manufacturer/ supplier in the same tender.

   Moreover, either the agent could bid on behalf of the manufacturer/ supplier or the manufacturer/ supplier could bid directly but not both. Agent/Representative authorized by the OEM/Principal in turn cannot further sub authorize any other firm for submitting the offer or for placement of order.

   In case bids are received from the manufacturer/ supplier and his agent, bid received from the agent shall be ignored.
5. Consultant / firm (and any of its affiliates) shall not be eligible to participate in the tender/s for the related goods for the same project if they were engaged for consultancy services for the same project.
6. If an Indian representative/associate/liaison office quotes on behalf of a foreign based bidder, such representative shall furnish the following documents:
   a. Authorization letter to quote and negotiate on behalf of such foreign-based bidder.
   b. Undertaking from such foreign based bidder that such contract will be honored and executed according to agreed scope of supply and commercial terms and conditions.

c. Undertaking shall be furnished by the Indian representative stating that the co-ordination and smooth execution of the contract and settlement of shortages/damages/replacement/repair of imported scope till the equipment is commissioned and handed over to customer will be the sole responsibility of the Indian representative/associates/agent/liaison office.

d. Refer **Annexure I** on "Guidelines for Indian Agents".

7. In case of imported scope of supply, customs clearance & customs duty payment will be to BHEL account after the consignment is received at Indian Airport /Seaport. Bidders must provide all original documents required for completing the customs clearance along with the shipment.

   Warehousing charges due to incomplete or missing documentation will be to supplier's account. All offers for imported scope of supply by air, must be made from any of the gateway ports (within the country) indicated **(Refer Annexure II).**

8. The offers of the bidders who are on the banned list and also the offers of the bidders, who engage the services of the banned firms, shall be rejected. The list of the banned firms is available on BHEL website: http://www.bhel.com/vender_registration/vender.php

9. Business dealings with bidders will be suspended if they are found to have indulged in any malpractices/misconduct which are contrary to business ethics like bribery, corruption, fraud, pilferage, cartel formation, submission of fake/false/forged documents, certificates, information to BHEL or if they tamper with tendering procedure affecting the ordering process or fail to execute a contract, or rejection of 3 consecutive supplies or if their firms / works are under strike/lockout for a long period. Bidder may refer "Guidelines for Suspension of Business Dealings with Suppliers/ Contractors" available on www.bhel.com for more details.

   The Bidder declares that they will not enter into any illegal or undisclosed agreement or understanding, whether formal or informal with other Bidder(s). This applies in particular to prices, specifications, certifications, subsidiary contracts, submission or non-submission of bids or any other actions to restrict competitiveness or to introduce cartelization in the bidding process. In case, the Bidder is found having indulged in above activities, suitable action shall be taken by BHEL as per extant policies / guidelines.

10. The bidder along with its associate/collaborators/sub-contractors/sub-vendors/consultants/service providers shall strictly adhere to BHEL Fraud Prevention Policy displayed on BHEL website http://www.bhel.com and shall immediately bring to the notice of BHEL Management about any fraud or suspected fraud as soon as it comes to your notice.

11. Offer is to be submitted in English language only.

12. For this procurement, the local content to categorize a supplier as a Class-I local supplier/ Class-II local supplier/ Non-local supplier and purchase preference to Class-I local supplier, is as defined in Public procurement (Preference to Make in India), Order 2017 dated 16.09.2020 issued by DPIIT.

    In case of subsequent Orders issued by the Nodal Ministry, changing the definition of local content for the items of the NIT, the same shall be applicable even if issued after issue of this NIT, but before opening of price bids against this NIT. Default margin of purchase preference shall be 20% for Class-I local supplier only.

13. The Bidder shall mandatorily submit Declaration as mentioned under Rule 144(xi) of General Financial Rules, 2017 amendment dt 23.07.2020 issued by Ministry of Finance, Govt. of India. Where applicable, evidence of valid registration by the Competent Authority shall be attached.

The Competent Authority for the purpose of registration under this Order shall be the Registration Committee constituted by the Department for Promotion of Industry and Internal Trade (DPIIT). Refer Annexure-IX for 'Restrictions under Rule 144(Xi) of General Financial Rules,2017 amendment dt: 23.07.2020'.

B. GUIDELINES FOR PREPARATION OF OFFER:

1. Quotation shall be submitted in Single Part Bid, Two Part Bid or Three Part Bid, as called for in the tender:

   - **SINGLE PART BID**: Technical and Commercial Bid with prices along with price summary & filled in BHEL Standard Commercial terms and conditions in a single sealed envelope.

   - **TWO PART BID**: Unpriced offer i.e. "Techno-commercial Bid" with filled in BHEL Standard Commercial terms and conditions in a sealed envelope **along with the copy of the "Price Bid" without the prices** should be enclosed in one cover and the cover must be super scribed **"Techno-commercial offer)** and Priced offer i.e. "Price Bid "containing price summary in a separate sealed envelope and must be super scribed **"Price Bid"**.

     Both these envelopes shall be enclosed in a single sealed envelope superscribed with enquiry number, due date of tender and any other details as called for in the tender document.

   - **THREE PART BID**: Pre-qualification Bid (Part-I), Techno Commercial Bid with filled in BHEL Standard Commercial terms and conditions (Part-II), and Price Bid (Part-III). All three envelopes shall be enclosed in a single sealed envelope superscribed with enquiry number, due date of tender and any other details as called for in the tender document.

   If any of the offers (Part I, Part II or Part III) are not submitted before the due date and time of submission (or) if any part of the offer is incomplete, the entire offer of the bidder is liable for rejection.

2. Supplier shall ensure to superscribe each envelope with RFQ number, RFQ Date, RFQ Due date and time, Item Description and Project clearly & boldly. Also mention on the envelope whether it is "Techno Commercial Bid" or "Price Bid" or "Pre-Qualification Bid".

   Please ensure complete address, department name and purchase executive name is mentioned on the envelope (before dropping in the tender box or handing over) so that the tender is available in time for bid opening.

3. BHEL standard Commercial Terms and Conditions (duly filled, signed & stamped) must accompany Technical-Commercial offer without fail and should be submitted in original only.

   The above indicated submission of Offers in "sealed envelope/hard copy" as mentioned in points B.1-B.3 is applicable for tenders that are not floated through E-Procurement System (EPS).

4. Validity: Unless otherwise specified in SCC (special commercial conditions of contract), the offer will be valid for a period of 90 days from the date of part-I bid opening and in case of Negotiation/Counter-offer/Reverse Auction, price validity will apply afresh for a period of 60 days from the date of according final price by bidder (or) up to original validity period, whichever is later.

5. Any of the terms and conditions not acceptable to supplier, shall be explicitly mentioned in the Techno-Commercial Bid.

   If no deviations are brought out in the offer it will be treated as if all terms and conditions of this enquiry are accepted by the supplier without deviation.

6. Deviation to this specification/item description, if any, shall be brought out clearly indicating "DEVIATION TO BHEL SPECIFICATION" without fail, as a part of Techno-Commercial Bid.

   If no deviations are brought out in the offer it will be treated as if the entire specification of this enquiry is accepted without deviation.

7. Suppliers shall submit one set of original catalogue, datasheets, bill of materials, dimensional drawings, mounting details and/or any other relevant documents called in purchase specification as part of Technical Bid.

8. "Price Bid" shall be complete in all respects containing price break-up of all components along with all applicable taxes and duties, freight charges (if applicable) etc. Once submitted no modification / addition / deletion will be allowed in the "Price Bid." Bidders are advised to thoroughly check the unit price, total price to avoid any discrepancy.

9. In addition, bidder shall also quote for erection & commissioning charges/erection supervision & commissioning charges (E&C service charges), documentation charges, testing Charges (type & routine), training charges etc. if & as applicable along with corresponding tax. The price summary must indicate all the elements clearly.

10. Wherever applicable, bidders should indicate "lumpsum" Erection and Commissioning (or) Erection Supervision and Commissioning charges, as applicable (including To & Fro Fare, Boarding, Lodging, Local Conveyance etc.) for carrying out E&C activity and further handing over to customer.

    The quotation shall clearly indicate scope of work, likely duration of commissioning, pre-commissioning checklist (if any).

11. Wherever bidders require PAC (Project Authority Certificate)/applicable certificates for import of raw materials, components required for DECC, EPCG Power Projects, Export Projects or other similar projects wherein supplies are eligible for customs duty benefits, lists and quantities of such items and their values (CIF) has to be mentioned in the offer. Prices must be quoted taking into account of such benefits.

12. Prices should be indicated in both figures & words**.** Bid should be free from correction/overwriting, using corrective fluid, etc. Any interlineation, cutting, erasure or overwriting shall be valid only if they are attested under full signature(s) of person(s) signing the bid else bid shall be liable for rejection.

    Any typographical error, totalling mistakes, currency mistake, multiplication mistake, summing mistakes etc. observed in the price bids will be evaluated as per **Annexure III** "Guidelines for dealing with Discrepancy in Words & Figures – quoted in price bid" and BHEL decision will be final.

13. Documents submitted with the offer shall be signed and stamped in each page by authorized representative of the bidder. However, this requirement is not mandatory for offers uploaded through E-Procurement System (EPS).

C. <u>GUIDELINES FOR OFFER SUBMISSION:</u>

The under-mentioned clauses 1, 2&3 will not be applicable for EPS tenders.

1. Offers / Quotations must be dropped in tender box before 13.00 Hrs. on or before due date mentioned in RFQ.The offers are to be dropped in the proper slot of the Tender Box kept in our reception area with caption "CE, SC&PV, DEFENCE".

   Tenders are opened on 3 days in a week (Monday/Wednesday/Friday). Tender must be deposited in the slot corresponding to the day (Monday - Box no.4/Wednesday - Box no. 6 /Friday - Box no.8) while depositing the offer.

2. E-Mail/ Internet/EDI offers received in time shall be considered only when such offers are complete in all respects. In case of offers received through E-mail, please send the offer to the email ID specified in the SCC document of the tender.

3. Offers of Vendors who already have a valid Technical/Commercial MOU with BHEL-EDN for the items of the RFQ shall mention the relevant MOU reference no. and give only such other details not covered in the MOU.

4. In cases where tender documents are bulky, or due to some reasons tender documents are required to be submitted by hand or through posts/couriers, the offers are to be handed over either of the two purchase officers whose names are mentioned in the SCC document of tender RFQ.
5. Tenders will be opened on due date, time and venue as indicated in the RFQ in the presence of bidders at the venue indicated in the RFQ. For EPS tenders, e-mail notifications will be automatically generated and forwarded to registered e-mail ID/s of bidders during opening of tenders.
6. Bidder will be solely responsible:
   a. For submission of offers before due date and time. Offers submitted after due date and time will be treated as "Late offers" and will be rejected.

   b. For submission of offers in the correct compartment of the tender box based on the day of due date (Monday/Wednesday/Friday). Please check before dropping your offer in the correct tender box.

   c. For depositing offers in proper sealed condition in the tender box. If the bidder drops the tender in the wrong tender box (or) if the tender document is handed over to the wrong person, BHEL will not be responsible for any such delays.

   d. For offers received through email etc., suppliers are fully responsible for lack of secrecy on information and ensuring timely receipt of such offers in the tender box before due date & time (This clause will not be applicable for EPS tenders).

   The above indicated submission of Offers as mentioned in points 6.a-6.d is applicable for tenders that are not floated through EPS.

   e. In case of e-tender, all required documents should be uploaded before due date and time. Availability of power, internet connections, system/software requirements etc. will be the sole responsibility of the bidder.

      Wherever assistance is needed for submission of e-tenders, help-line numbers as available in the web-site of service provider of BHEL may be contacted.

      Purchase Executive/ BHEL shall not be responsible for any of the activities relating to submission of offer.

D. <u>PROCESSING OF OFFERS RECEIVED:</u>

1. Any discount/ revised offer submitted by the supplier on its own shall be accepted provided it is received on or before the due date and time of offer submission (i.e. Part-I bid).

   The discount shall be applied on pro-rata basis to all items unless specified otherwise by the bidder.
2. Changes in offers or Revised offers given after Part-I bid opening shall not be considered as a part of the original offer unless such changes/revisions are requested by BHEL.

In case of withdrawal of any Technical/Commercial deviation(s) by the bidder before opening of price bids/conducting the Reverse Auction, revision of price/impact bid will not be accepted.

3. In case there is no change in the technical scope and/ or specifications and/ or commercial terms & conditions, the supplier will not be allowed to change any of their bids after Technical bids are opened (after the due date and time of tender opening).
4. In case of changes in scope and/ or technical specifications and/ or commercial terms & conditions by BHEL and it accounts for price implications from bidders, all techno-commercially acceptable bidders shall be asked by BHEL (after freezing the scope, technical specifications and commercial terms & conditions) to submit the impact of such changes on their price bid.

   Impact price will be applicable only for changes in technical specification / commercial conditions by BHEL. The impact price must be submitted on or before the cut-off date specified by BHEL and the original price bid and the price impact bid will be opened together at the time of price bid opening.
5. Un-opened bids (including price bids) will be returned to the respective bidders after release of Purchase order.

   Regarding Offers for EPS tenders that get rejected on PQC/ techno-commercial grounds, the bids for the subsequent parts will not be opened i.e., both technical bid and price bid (Parts-II & III) will not be opened in case of rejection on PQC ground and price bid (Part-II/Part-III, as applicable) will not be opened in case of rejection on techno-commercial ground.
6. After receipt of Purchase Order, supplier should submit required documents viz., specified drawings, bill of materials, datasheets, catalogues, quality plan, test procedure, type test report, O & M Manuals and/or any other relevant documents as per Specification/Purchase Order, as and when required by BHEL/Customer.
7. Any deviation to the terms and conditions not mentioned in the quotation by supplier in response to this enquiry will not be considered, if put forth subsequently or after issue of Purchase Order, unless clarification is sought for by BHEL and agreed upon in the Purchase Order.
8. Evaluation shall be on the basis of delivered cost (i.e. “Total Cost to BHEL").

   “Total Cost to BHEL” shall include total basic cost, packing & forwarding charges, taxes and/or duties (as applicable), freight charges, taxes on Services, customs clearance charges for imported items, any other cost indicated by bidder for execution of the contract and loading factors (for non-compliance to BHEL Standard Commercial Terms & Conditions).

   Benefits arising out of Nil Import Duty on DEEC, EPCG, DFIA Projects, Physical Exports or such 100% exemptions (statutory benefits), project imports, customer reimbursements of statutory duties (like Basic Customs Duty and cess on customs duty), Input tax credits as applicable will also be taken into account for arriving at the Total cost to BHEL (wherever applicable and as indicated in SCC document of tender).

   For EPS tenders, it shall be noted that the prices (including discounts) vis-a-vis currency quoted in EPS portal only will be considered as Final for the purpose of evaluation of the lowest bidder.

   Bidder shall ensure to indicate the applicable taxes against each line item in online portal, failing to which the same will be considered as inclusive/NIL.

   In the course of evaluation, if more than one bidder happens to occupy L-1 status, effective L-1 will be decided by soliciting discounts from the respective L-1 bidders.

   Incase more than one bidder happens to occupy the L-1 status even after soliciting discounts, the L-1 bidder shall be decided by a toss/draw of lots, in the presence of the respective L-1 bidder(s) or their representative(s).

Ranking will be done accordingly. BHEL's decision in such situations shall be final and binding.

9. The evaluation currency for this tender shall be INR. For evaluation of offers in foreign currency, the exchange rate (TT selling rate of SBI) shall be taken as under:

   Single part bids: Date of tender opening

   Two/three part bids: Date of Part-I bid opening

   Reverse Auction: Date of Part-I bid opening

   In case of Performance Bank Guarantee (PBG) also, exchange rate will be considered as mentioned above for converting foreign currency to Indian currency and vice versa.

   If the relevant day happens to be a bank holiday, then the exchange rate as on the previous working day of the bank (SBI) shall be taken.

10. Ranking (L-1, L-2 etc.) shall be done only for the techno-commercially acceptable offers.
11. GeM Seller ID shall be mandatory before placement of order/award of contract for goods and services to the successful bidder(s), for orders exceeding Rs.25 lakhs (including all taxes etc.). Department of Expenditure (DoE) OM no.6/9/2020-PPD dated: 24.08.2020 may be referred in this regard.

E. <u>INFORMATION ON PAYMENT TERMS:</u>

1. All payments will be through Electronic Fund transfer (EFT). Vendor has to furnish necessary details as per BHEL standard format **(Refer Annexure IV)** for receiving all payments through NEFT. (Applicable for Indian vendors only).
2. In case of High Sea Sales transaction, customs clearance of the consignment landed on Indian Sea/Air ports will be done by BHEL based on the original HSS documents provided by vendors.

   All warehousing charges due to delay in submission of complete and or correct HSS documents to BHEL will be to supplier's account only. Such recovery will be made out of any of the available bills **(Refer Annexure V)**.
3. Statutory deductions, if any, will be made and the deduction certificate shall be issued.

   A. In case vendor does not provide PAN details, the TDS deduction shall be at the maximum percentage stipulated as per the provisions of Income Tax Act.

      In addition to the above, Foreign vendors shall also submit relevant details of their bankers like Swift Code, Banker's Name &Address etc.

   B. TDS deduction as per section 51 of CGST Act,2017 shall be applicable as per Gazette Notification No. 50/2018-Central Tax, Dated: 13th September 2018 and subsequent notification/s, as and when released by Govt. authorities.

4. Procurement of Goods/ Works/ Services/ Consultancy Services [under clause relating to "Income Tax and Corporate Tax" or "TDS"]

   a) Provision w.r.t. TDS on Purchase of Goods under section 194Q of Income Tax Act applicable from 01.07.2021 is as under:
   i. TDS as applicable will be deducted by BHEL under section 194Q of the Income Tax Act, 1961 on Purchases exceeds, the amount of Rupees. 50 Lakhs or limit defined therein from time to time during the financial year under the Indian Income Tax act 1961.

ii. Since BHEL is liable to deduct Income Tax TDS under section 194Q, the provision of TCS as per section 206C(1H) of the Income Tax Act, 1961 shall not be applicable.

b) Higher rate of TDS for non-filers of ITR as per Section 206AB of Income Tax Act, 1961, in case of any vendor who does not filed their Income Tax Return for both of the two previous years preceding to current year and aggregate amount of TDS is more than or equal to Rs. 50,000/- in each of those previous two years (or limit defined by Govt. from time to time), then TDS will be deducted at the higher of following rates:
(i) Twice the rate mentioned in relevant TDS section.
(ii) Twice the rate or rates in force
(iii) 5%.

5. Incomplete documentation will not be accepted. Delayed submission of invoice / documents may result in corresponding delay in payment. In this connection, request to also refer clause: G about invoicing & payment formalities under GST regime.

   Applicable documents shall be submitted to the purchaser at the time of execution of supplies/services for availing GST input credits.

F. STANDARD PAYMENT TERMS OF BHEL-EDN:

PURCHASE ORDERS FOR:	**SUPPLY WITH SERVICE(S)**	**SUPPLY ONLY**
INDIGENOUS PROCUREMENT	a. 100% of basic value with taxes and freight will be paid in 45 days from the date of dispatch or 15 days from the date of submission of complete set of documentation, whichever is later. Note: In case PBG is not furnished, only 90% payment will be released against 100% claim without the consent of Vendor. This 10% basic amount withheld towards PBG will be paid either against submission of supplementary invoice & Original PBG (or) against supplementary invoice without PBG after expiry of Warranty period.	b. 100% of PO value with taxes and freight will be paid in 45 days from the date of dispatch or 15 days from the date of submission of complete set of documentation, whichever is later.
IMPORT PROCUREMENT	c. 100% of basic value will be paid against usance draft of 45 days from the date of AWB/BOL on submission of complete set of documents. Note: In case PBG is not furnished, only 90% payment will be released against 100% claim without the consent of Vendor. This 10% basic amount withheld towards PBG will be paid either against submission of supplementary invoice & Original PBG (or) against supplementary invoice without PBG after expiry of Warranty period.	d. 100% of PO value will be paid against usance draft of 45 days from the date of AWB/BOL on submission of complete set of documents.

HIGH-SEA SALES PROCUREMENT	e. 100% of basic value will be paid in 45 days from the date of signing of High Sea Sale agreement or 15 days from the date of submission of complete set of documentation, whichever is later Note: In case PBG is not furnished, only 90% payment will be released against 100% claim without the consent of Vendor. This 10% basic amount withheld towards PBG will be paid either against submission of supplementary invoice & Original PBG (or) against supplementary invoice without PBG after expiry of Warranty period.	f. 100% of basic value will be paid in 45 days from the date of signing of High Sea Sale agreement or 15 days from the date of submission of complete set of documentation, whichever is later.

g. Erection and Commissioning:

Evaluation methodology: Unless and otherwise specified in SCC, E&C charges should not be less than 05% of the main supply value. In case the quoted total E&C value is less than 05% of the main supply value, BHEL shall evaluate Bidders Price deducting differential amount from main supply price proportionally from all items and apportioning towards E&C charges.

Payment term: 100% E&C charges along with tax as applicable, will be paid in 15 days from the date of submission of supplementary invoice/documents against proof of completion of E&C.

h. Erection Supervision and Commissioning:

Evaluation methodology: Unless and otherwise specified in SCC, Commissioning charges should not be less than 05% of the main supply value. In case the quoted total Commissioning charges is less than 05% of the main supply value, BHEL shall evaluate Bidders Price deducting differential amount from main supply price proportionally from all items and apportioning towards Commissioning charges.

Payment term: 100% Commissioning charges along with tax as applicable, will be paid in 15 days from the date of submission of supplementary invoice/documents against proof of completion of Commissioning.

i. Comprehensive Annual Maintenance Contract:

Evaluation methodology: Unless and otherwise specified in SCC, CAMC will be applicable for a period of 04 years from the date of expiry of warranty period (or) from the date of completion of commissioning of equipment, whichever is later and the total CAMC value should not be less than 20% of the main supply value. In case the quoted total CAMC value is less than 20% of the main supply value, BHEL shall evaluate Bidders Price deducting differential amount from main supply price proportionally from all items and apportioning towards CAMC charges.

Payment terms: 100% CAMC charges along with tax as applicable, will be paid in 15 days from the date of submission of supplementary invoice/documents against proof of completion of CAMC on yearly basis.

j. Terms of Payment for Training: 100% payment will be made in 45 days from the date of completion of Training or 15 days from the date of submission of complete set of invoice along with documentary evidence, whichever is later.

LOADING FACTORS FOR DEVIATION IN PAYMENT TERMS:

i) INDIGENOUS PROCUREMENT:

For payment term with credit period of less than 45 days for indigenous supply, 'Base rate of SBI (as applicable on the date of bid opening; Techno-commercial bid opening in case of two part bids) +6%', shall be considered for loading for the period of relaxation sought.

ii) IMPORT PROCUREMENT:

1) For offers received with Sight draft payment term in place of Usance draft, loading applicable will be 1.0% of basic value.

2) For offers received with Letter of Credit payment term with Usance of 45 days, loading applicable will be 2.5% of basic value. Additional loading of 2% will be applicable for payment term as Letter of Credit at Sight.

k. Any other variation of payment terms are liable for rejection.

l. Standard payment terms indicated in Clauses: F (a), (b), (c), (d), (e), (f), (g), (h), (i) & (j) will not attract any loading.

Note 1: Basic value of Purchase Order mentioned above will include all components of the purchase order and will exclude only taxes, duties, freight, training charges, E&C and AMC charges (wherever applicable). Wherever the Purchase Order is split into import portion and indigenous portion of supply, minimum % to be quoted for Services, wherever mentioned, will be of both purchase order values put together.

Note 2: In case of multiple packages/units in a power plant, payment of E&C charges will be processed on pro-rata basis.

Note 3: No deviation will be permitted from the duration of Guarantee/Warranty and/or Comprehensive Annual Maintenance Contract period specified in SCC.

Note 4: Indigenous bidder opting to quote with usance LC payment term of 120 days shall note that LC processing charges viz., opening, amendment/ discrepancy (if & as applicable) will be to supplier's account. Bank charges of Seller's bank shall be to Seller's account and bank charges of Owner's bank other than Bill collection charges shall be to Owner's account. Bill collection charges will be borne by Seller.

G. Terms & Conditions to be complied under GST regime:

1. All invoices to contain BHEL-EDN (buyer) GSTIN number: 29AAACB4146P1ZB. However for CGST +SGST/UGST billing outside the state of Karnataka, invoice has to be generated with BHEL's Nodal Agency GSTIN number. Address of Nodal Agency along with GSTIN number will be provided by BHEL at the time of issuing dispatch clearance.

2. The Bidder shall mention Bidder's GSTIN number in all quotations and Invoices submitted.

3. The Bidder shall also mention HSN (Harmonized System of Nomenclature) / SAC (Services Accounting Code) mandatorily in all quotations and invoices submitted.

4. Invoice submitted should be in the format as specified under GST Laws viz., all details as mentioned in Invoice Rules like GST registration number(GSTIN), invoice number with date of issue, quantity, rate, value, taxes with

nomenclature – CGST, SGST, UGST, IGST mentioned separately, HSN Code / SAC Code etc. Invoice should be submitted in original for buyer plus duplicate for credit availment.

5. Payment of GST to Vendor will be made only if it is matching with data uploaded by the Vendor in GST portal.

6. For invoices paid on Reverse charge basis – "Tax payable on reverse charge basis" to be mentioned on the invoice.

7. In case GST credit is delayed/denied to BHEL due to non/delayed receipt of goods and/or tax invoice or expiry of timeline prescribed in GST law for availing such ITC, or any other reasons not attributable to BHEL, GST amount will be recoverable from vendor along with interest levied/ leviable on BHEL.

8. In case vendor delays declaring such invoice in his return and GST credit availed by BHEL is denied or reversed subsequently as per GST law, GST amount paid by BHEL towards such ITC reversal as per GST law will be recoverable from vendor/contractor along with interest levied/ leviable on BHEL.

9. Vendor should intimate BHEL immediately on the same date of invoicing without any delay.

10. In case of discrepancy in the data uploaded by supplier in the GSTN portal or in case of any shortages or rejection in the supply, then BHEL will not be able to avail the tax credit and will notify the supplier of the same. Supplier has to rectify the data discrepancy in the GSTN portal or issue credit note (details to be uploaded in GSTN portal) for the shortages or rejections in the supplies, within the calendar month notified by BHEL.

11. Bidders to note that Rules & Regulations pertaining to E-way bill system are to be strictly adhered to, as and when notified by Govt. authorities.

12. As per Notification no.17/2022-Central Tax dated 01st August,2022 (applicable w.e.f. 01st day of October, 2022), the turnover for applicability of E-invoicing provisions has been reduced from 20 crore rupees to 10 crore rupees. In other words, registered person [other than a SEZ unit and those referred in Rule 54(2), 54(3), 54(4) and 54(4A) of the CGST Rules], whose aggregate turnover in any of the previous FY beginning from 2017-18 and onwards exceeds 10 crores, is required to comply with the requirement of IRN and QR code in respect of supply of goods or services or both to a registered person or for exports.

H. <u>Performance security</u>: To ensure due performance of the contract, Performance Bank Guarantee (PBG) or Security Deposit (SD), hereafter referred as performance security has to be submitted by successful bidder for 05% (unless specified otherwise) of the contract value.

<u>Modes of deposit</u>:

a) Performance security may be furnished in the following forms:

(i) Local cheques of Scheduled Banks (subject to realization)/ Pay Order/ Demand Draft/ Electronic Fund Transfer in favour of BHEL.

(ii) Bank Guarantee from Scheduled Banks / Public Financial Institutions as defined in the Companies Act. PBG should be in the format specified in Annexure-VII of ITB and no deviation to this format will be allowed.

(iii) Fixed Deposit Receipt issued by Scheduled Banks / Public Financial Institutions as defined in the Companies Act (FDR should be in the name of the Contractor, a/c BHEL).

(iv) Securities available from Indian Post offices such as National Savings Certificates, Kisan Vikas Patras etc. (held in the name of Contractor furnishing the security and duly endorsed/ hypothecated/ pledged, as applicable, in favour of BHEL).

(v) Insurance Surety Bond.

Note: BHEL will not be liable or responsible in any manner for the collection of interest or renewal of the documents or in any other matter connected therewith)

b) PBG has to be furnished within 14 days (unless specified otherwise) after notification of the award and it should remain valid for a period of 60 days beyond the date of completion of all contractual obligations, including warranty obligations.

c) The Performance security will be forfeited and credited to BHEL's account in the event of a breach of contract by the supplier.

d) Performance security shall be refunded to the supplier without interest, after duly performing and completing the contract in all respects but not later than 60 days of completion of all such obligations including the warranty under the contract.

e) The Performance security shall not carry any interest.

I. PURCHASE PREFERENCE FOR MSE (MICRO AND SMALL ENTERPRISES) VENDORS:

Purchase preference will be given to MSEs as defined in Public Procurement Policy for Micro and Small Enterprises (MSEs) Order, 2012 dated 23.03.2012 issued by Ministry of Micro, Small and Medium Enterprises and its subsequent Orders/Notifications issued by concerned Ministry. If the bidder wants to avail the Purchase preference, the bidder must be the manufacturer of the offered product in case of bid for supply of goods.

Traders are excluded from the purview of Public Procurement Policy for Micro and Small Enterprises. Relevant documentary evidence in this regard shall be uploaded along with the bid in respect of the offered product. Purchase preference to Micro and Small Enterprises clause in the bid, the same will get precedence over this clause.

1. If tendered quantity is Splitable: In tender, participating MSEs quoting price within price band of L1+15 percent shall also be allowed to supply a portion of requirement by bringing down their price to L1 price in a situation where L1 price from someone other than a MSE and such MSE shall be allowed to supply at least 25% of total tendered value. In case of more than one such MSE, the supply shall be shared proportionately (to tendered quantity).

- 3% of the 25% will be earmarked for women owned MSEs.

- 25% of the 25% (i.e., 6.25% of the total enquired quantity) will be earmarked for SC/ST owned MSE firms provided conditions as mentioned in (1) & (2) are fulfilled.

• In case where no SC/ST category firms are meeting the conditions mentioned in (1) and (2) or have not participated in the tender, the 6.25% of earmarked quantity for SC/ST owned MSE firms will be distributed among the other eligible MSE vendors who have participated in the tender.

2. If tendered quantity is Non-Splitable: If L-1 is not an MSE and MSE Seller (s) has/have quoted price within L-1+ 15% of margin of purchase preference /price band defined in relevant policy, such Seller shall be given opportunity to match L-1 price and contract will be awarded for 100% of total value.

Operation methodology of Purchase preference clause to MSE & MII bidders is as detailed in the attached Office Memorandum issued by Department of Expenditure dt:18.05.2023 (Annexure-VIII).

J. INTEGRITY COMMITMENT IN THE TENDER PROCESS, AND EXECUTION OF CONTRACTS:

1. Commitment by BHEL: BHEL commits to take all measures necessary to prevent corruption in connection with the Tender process and execution of the Contract. BHEL will, during the tender process, treat all bidder / suppliers in a transparent and fair manner, and with equity.

2. Commitment by Bidder(s)/ Contractor(s):

a. The Bidder(s)/ Contractor(s) commit(s) to take all measures to prevent corruption and will not directly or indirectly try to influence any decision or benefit which he is not legally entitled to.

b. The Bidder(s)/ Contractor(s) will not enter with other Bidder(s) into any undisclosed agreement or understanding or any actions to restrict competition.

c. The Bidder(s)/ Contractor(s) will not commit any offence under the relevant Acts. The Bidder(s)/ Contractor(s) will not use improperly, for purposes of competition or personal gain or pass on to others, any information or document provided by BHEL as part of business relationship.

d. The Bidder(s)/ Contractor(s) will, when presenting his bid, disclose any and all payments he has made, and is committed to or intends to make to agents, brokers or any other intermediaries in connection with the award of the contract and shall adhere to the relevant guidelines issued from time to time by Government of India/ BHEL.

If the Bidder(s) / Contractor(s), before award or during execution of the Contract commit(s) a transgression of the above or in any other manner such as to put his reliability or credibility in question, BHEL is entitled to disqualify the Bidder(s) / Contractor (s) from the tender process or terminate the contract and/ or take suitable action as deemed fit.

K. Integrity Pact (IP):

(a) IP is a tool to ensure that activities and transactions between the Company and its Bidders/ Contractors are handled in a fair, transparent and corruption free manner. Following Independent External Monitors (IEMs) on the present panel have been appointed by BHEL with the approval of CVC to oversee implementation of IP in BHEL.

Sl	IEM	Email
1.	Shri Otem Dai, IAS (Retd.)	iem1@bhel.in
2.	Shri Bishwamitra Pandey, IRAS (Retd.)	iem2@bhel.in
3.	Shri Mukesh Mittal, IRS (Retd.)	iem3@bhel.in

(b) The IP as enclosed with the tender is to be submitted (duly signed by authorized signatory) along with techno-commercial bid (Part-I, in case of two/ three part bid). Only those bidders who have entered into such an IP with BHEL would be competent to participate in the bidding. In other words, entering into this Pact would be a preliminary qualification.

(c) Please refer Section-8 of IP for Role and Responsibilities of IEMs. In case of any complaint arising out of the tendering process, the matter may be referred to any of the above IEM(s). All correspondence with the IEMs shall be done through email only.

Note: No routine correspondence shall be addressed to the IEM (phone/ post/ email) regarding the clarifications, time extensions or any other administrative queries, etc. on the tender issued. All such clarification/ issues shall be addressed directly to the tender issuing (procurement) department's officials whose contact details are provided in SCC document of tender.

L. Conflict of Interest among Bidders/Agents:

"A bidder shall not have conflict of interest with other bidders. Such conflict of interest can lead to anti-competitive practices to the detriment of Procuring Entity's interests. ***The bidder found to have a conflict of interest shall be disqualified.*** *A bidder may be considered to have a conflict of interest with one or more parties in this bidding process, if:*

a) they have controlling partner (s) in common; ***or***

b) they receive or have received any direct or indirect subsidy/ financial stake from any of them; ***or***

c) they have the same legal representative/agent for purposes of this bid; ***or***

d) they have relationship with each other, directly or through common third parties, that puts them in a position to have access to information about or influence on the bid of another Bidder; ***or***

e) Bidder participates in more than one bid in this bidding process. Participation by a Bidder in more than one Bid will result in the disqualification of all bids in which the parties are involved. However, this does not limit the inclusion of the components/ sub-assembly/ Assemblies from one bidding manufacturer in more than one bid; ***or***

f) In cases of agents quoting in offshore procurements, on behalf of their principal manufacturers, one agent cannot represent two manufacturers or quote on their behalf in a particular tender enquiry. One manufacturer can also authorise only one agent/dealer. There can be only one bid from the following:

1. *The principal manufacturer directly or through one Indian agent on his behalf; and*
2. *Indian/foreign agent on behalf of only one principal;*

or

g) A Bidder or any of its affiliates participated as a consultant in the preparation of the design or technical specifications of the contract that is the subject of the Bid; ***or***

h) In case of a holding company having more than one independently manufacturing units, or more than one unit having common business ownership/management, only one unit should quote. Similar restrictions would apply to closely related sister companies. Bidders must proactively declare such sister/ common business/ management units in same/ similar line of business."

RFQ No.: NJP0000041

Annexure-1

INTEGRITY PACT

Between

Bharat Heavy Electricals Ltd. (BHEL), a company registered under the Companies Act 1956 and having its registered office at "BHEL House", Siri Fort, New Delhi - 110049 (India) hereinafter referred to as "The Principal", which expression unless repugnant to the context or meaning hereof shall include its successors or assigns of the ONE PART

and

_____, (description of the party along with address), hereinafter referred to as "The Bidder/ Contractor" which expression unless repugnant to the context or meaning hereof shall include its successors or assigns of the OTHER PART

Preamble

The Principal intends to award, under laid-down organizational procedures, contract/s for Rate Contract for 2024-25 for Supply of LIE/LIR-Various Projects. (hereinafter referred to as "Contract"). The Principal values full compliance with all relevant laws of the land, rules and regulations, and the principles of economic use of resources, and of fairness and transparency in its relations with its Bidder(s)/ Contractor(s).

In order to achieve these goals, the Principal will appoint panel of Independent External Monitor(s) (IEMs), who will monitor the tender process and the execution of the contract for compliance with the principles mentioned above.

Section 1- Commitments of the Principal

1.1 The Principal commits itself to take all measures necessary to prevent corruption and to observe the following principles: -

1.1.1 No employee of the Principal, personally or through family members, will in connection with the tender for, or the execution of a contract, demand, take a promise for or accept, for self or third person, any material or immaterial benefit which the person is not legally entitled to.

1.1.2 The Principal will, during the tender process treat all Bidder(s) with equity and reason. The Principal will in particular, before and during the tender process, provide to all Bidder(s) the same information and will not provide to any Bidder(s) confidential/ additional information through which the Bidder(s) could obtain an advantage in relation to the tender process or the contract execution.

1.1.3 The Principal will exclude from the process all known prejudiced persons.

1.2 If the Principal obtains information on the conduct of any of its employees which is a penal offence under the Indian Penal Code 1860 and Prevention of Corruption Act 1988 or any other statutory penal enactment, or if there be a substantive suspicion in this regard, the Principal will inform its Vigilance Office and in addition can initiate disciplinary actions.

Section 2 - Commitments of the Bidder(s)/ Contractor(s)

2.1 The Bidder(s)/ Contractor(s) commit himself to take all measures necessary to prevent corruption. The Bidder(s)/ Contractor(s) commits himself to observe the following principles during participation in the tender process and during the contract execution.

ನಂದಜೀ ಪಂಡಿತ್, ಅಭಿಯಂತರ/ಸಿವಿಲ್
NANDJEE PANDIT, ENGINEER/CIVIL
BHEL-EDN, MYSURU ROAD, BENGALURU-560026

2.1.1 The Bidder(s)/ Contractor(s) will not, directly or through any other person or firm, offer, promise or give to the Principal or to any of the Principal's employees involved in the tender process or the execution of the contract or to any third person any material, immaterial or any other benefit which he/ she is not legally entitled to, in order to obtain in exchange any advantage of any kind whatsoever during the tender process or during the execution of the contract.

2.1.2 The Bidder(s)/ Contractor(s) will not enter with other Bidder(s) into any illegal or undisclosed agreement or understanding, whether formal or informal. This applies in particular to prices, specifications, certifications, subsidiary contracts, submission or non-submission of bids or any other actions to restrict competitiveness or to introduce cartelization in the bidding process.

2.1.3 The Bidder(s)/ Contractor(s) will not commit any penal offence under the relevant Indian Penal Code (IPC) and Prevention of Corruption Act; further the Bidder(s)/ Contractor(s) will not use improperly, for purposes of competition or personal gain, or pass on to others, any information or document provided by the Principal as part of the business relationship, regarding plans, technical proposals and business details, including information contained or transmitted electronically.

2.1.4 Foreign Bidder(s)/ Contractor(s) shall disclose the name and address of agents and representatives in India and Indian Bidder(s)/ Contractor(s) to disclose their foreign principals or associates. The Bidder(s)/ Contractor(s) will, when presenting his bid, disclose any and all payments he has made, and is committed to or intends to make to agents, brokers or any other intermediaries in connection with the award of the contract.

2.2 The Bidder(s)/ Contractor(s) will not instigate third persons to commit offences outlined above or be an accessory to such offences.

2.3 The Bidder(s)/ Contractor(s) shall not approach the Courts while representing the matters to IEMs and shall await their decision in the matter.

Section 3 - Disqualification from tender process and exclusion from future contracts

If the Bidder(s)/ Contractor(s), before award or during execution has committed a transgression through a violation of Section 2 above, or acts in any other manner such as to put his reliability or credibility in question, the Principal is entitled to disqualify the Bidder(s)/ Contractor(s) from the tender process , terminate the contract, if already awarded, exclude from future business dealings and/ or take action as per the separate "Guidelines on Banning of Business dealings with Suppliers/ Contractors", framed by the Principal.

Section 4 - Compensation for Damages

4.1 If the Principal has disqualified the Bidder (s) from the tender process before award / order acceptance according to Section 3, the Principal is entitled to demand and recover the damages equivalent to Earnest Money Deposit/ Bid Security.

4.2 If the Principal is entitled to terminate the Contract according to Section 3, or terminates the Contract in application of Section 3 above , the Bidder(s)/ Cotractor (s) transgression through a violation of Section 2 above shall be construed breach of contract and the Principal shall be-entitled to demand and recover from the Contractor an amount equal to 5% of the contract value or the amount equivalent to Security Deposit/ Performance Bank Guarantee , whichever is higher, as damages, in addition to and without prejudice to its right to demand and recover compensation for any other loss or damages specified elsewhere in the contract.

ನಂದಜೀ ಪಂಡಿತ್, ಎಂಜಿನಿಯರ್/ಸಿ.ಇ.-ಎಂ.ಎಂ.-ಪಿ.ಆರ್.
नदजी पंडित, अभियंता/सी.ई.-एम.एम.-पी.आर.
NANDJEE PANDIT, ENGINEER/CE-MM-PR
BHEL-EDN, MYSURU ROAD, BENGALURU-560026

Section 5 - Previous Transgression

5.1 The Bidder declares that no previous transgressions occurred in the last 3 (three) years with any other company in any country conforming to the anti-corruption approach or with any other Public Sector Enterprise in India that could justify his exclusion from the tender process.

5.2 If the Bidder makes incorrect statement on this subject, he can be disqualified from the tender process or the contract, if already awarded, can be terminated for such reason or action can be taken as per the separate "Guidelines on Banning of Business dealings with Suppliers/ Contractors", framed by the Principal.

Section 6 - Equal treatment of all Bidder (s)/ Contractor (s) / Sub-contractor (s)

6.1 The Principal will enter into Integrity Pacts with identical conditions as this Integrity Pact with all Bidders and Contractors.

6.2 In case of Sub-contracting, the Principal Contractor shall take the responsibility of the adoption of Integrity Pact by the Sub-contractor(s) and ensure that all Sub-contractors also sign the Integrity Pact.

6.3 The Principal will disqualify from the tender process all Bidders who do not sign this Integrity Pact or violate its provisions.

Section 7 - Criminal Charges against violating Bidders/ Contractors /Subcontractors

If the Principal obtains knowledge of conduct of a Bidder, Contractor or Subcontractor, or of an employee or a representative or an associate of a Bidder, Contractor or Subcontractor which constitutes corruption, or if the Principal has substantive suspicion in this regard, the Principal will inform the Vigilance Office.

Section 8 -Independent External Monitor(s)

8.1 The Principal appoints competent and credible panel of Independent External Monitor (s) (IEMs) for this Integrity Pact. The task of the IEMs is to review independently and objectively, whether and to what extent the parties comply with the obligations under this Integrity Pact.

8.2 The IEMs are not subject to instructions by the representatives of the parties and performs his functions neutrally and independently. He reports to the CMD, BHEL.

8.3 The IEMs shall be provided access to all documents/ records pertaining to the Contract, for which a complaint or issue is raised before them as and when warranted. However, the documents/records/information having National Security implications and those documents which have been classified as Secret/Top Secret are not to be disclosed.

8.4 The Principal will provide to the IEMs sufficient information about all meetings among the parties related to the Contract provided such meetings could have an impact on the contractual relations between the Principal and the Contractor. The parties offer to the IEMs the option to participate in such meetings.

ನಂದಜೀ ಪಂಡಿತ್,
नंदजी पंडित, अभियंता/सी.ई.
NANDJEE PANDIT, ENGINEER/CE-MM-PR
BHEL-EDN, MYSURU ROAD, BENGALURU-560026

8.5 The advisory role of IEMs is envisaged as that of a friend, philosopher and guide. The advice of IEMs would not be legally binding and it is restricted to resolving issues raised by a Bidder regarding any aspect of the tender which allegedly restricts competition or bias towards some Bidders. At the same time, it must be understood that IEMs are not consultants to the Management. Their role is independent in nature and the advice once tendered would not be subject to review at the request of the organization.

8.6 For ensuring the desired transparency and objectivity in dealing with the complaints arising out of any tendering process or during execution of Contract, the matter should be examined by the full panel of IEMs jointly, who would look into the records, conduct an investigation, and submit their joint recommendations to the Management.

8.7 The IEMs would examine all complaints received by them and give their recommendations/ views to the CMD, BHEL at the earliest. They may also send their report directly to the CVO, in case of suspicion of serious irregularities requiring legal/ administrative action. Only in case of very serious issue having a specific, verifiable Vigilance angle, the matter should be reported directly to the Commission. IEMs will tender their advice on the complaints within 30 days.

8.8 The CMD, BHEL shall decide the compensation to be paid to the IEMs and its terms and conditions.

8.9 IEMs should examine the process integrity, they are not expected to concern themselves with fixing of responsibility of officers. Complaints alleging mala fide on the part of any officer of the Prinicpal should be looked into by the CVO of the Principal.

8.10 If the IEMs have reported to the CMD, BHEL, a substantiated suspicion of an offence under relevant Indian Penal Code / Prevention of Corruption Act, and the CMD, BHEL has not, within reasonable time, taken visible action to proceed against such offence or reported it to the Vigilance Office, the IEMs may also transmit this information directly to the Central Vigilance Commissioner, Government of India.

8.11 After award of work, the IEMs shall look into any issue relating to execution of Contract, if specifically raised before them. As an illustrative example, if a Contractor who has been awarded the Contract, during the execution of Contract, raises issue of delayed payment etc. before the IEMs, the same shall be examined by the panel of IEMs. Issues like warranty/ guarantee etc. shall be outside the purview of IEMs.

8.12 However, the IEMs may suggest systemic improvements to the management of the Principal, if considered necessary, to bring about transparency, equity and fairness in the system of procurement.

8.13 The word `Monitor' would include both singular and plural.

Section 9 - Pact Duration

9.1 This Integrity Pact shall be operative from the date this Integrity Pact is signed by both the parties till the final completion of contract for successful Bidder, and for all other Bidders 6 months after the Contract has been awarded. Any violation of the same would entail disqualification of the bidders and exclusion from future business dealings.

9.2 If any claim is made/ lodged during currency of this Integrity Pact, the same shall be binding and continue to be valid despite the lapse of this Pact as specified above, unless it is discharged/ determined by the CMD, BHEL.

नंदजी पंडित, अभियंता/सी.ई.-एम.एम.-पी.आर.
NANDJEE PANDIT, ENGINEER/CE-MM-PR
BHEL-EDN, MYSURU ROAD, BENGALURU-560026

Section 10 - Other Provisions

10.1 This Integrity Pact is subject to Indian Laws and exclusive jurisdiction shall be of the competent Courts as indicated in the Tender or Contract, as the case may be.

10.2 Changes and supplements as well as termination notices need to be made in writing.

10.3 If the Bidder(s)/ Contractor(s) is a partnership or a consortium or a joint venture, this Integrity Pact shall be signed by all partners of the partnership or joint venture or all consortium members.

10.4 Should one or several provisions of this Integrity Pact turn out to be invalid, the remainder of this Integrity Pact remains valid. In this case, the parties will strive to come to an agreement to their original intentions.

10.5 Only those bidders / contractors who have entered into this Integrity Pact with the Principal would be competent to participate in the bidding. In other words, entering into this Integrity Pact would be a preliminary qualification.

10.6 In the event of any dispute between the Principal and Bidder(s)/ Contractor(s) relating to the Contract, in case, both the parties are agreeable, they may try to settle dispute through Mediation before the panel of IEMs in a time bound manner. In case, the dispute remains unresolved even after mediation by the panel of IEMs, either party may take further action as the terms & conditions of the Contract. The fees/expenses on dispute resolution through mediation shall be shared by both the parties. Further, the mediation proceedings shall be confidential in nature and the parties shall keep confidential all matters relating to the mediation proceedings including any settlement agreement arrived at between the parties as outcome of mediation. Any views expressed, suggestions, admissions or proposals etc. made by either party in the course of mediation shall not be relied upon or introduced as evidence in any further arbitral or judicial proceedings, whether or not such proceedings relate to the dispute that is the subject of mediation proceedings. Neither of the parties shall present IEMs as witness in any Alternative Dispute Resolution or judicial proceedings in respect of the dispute that was subject of mediation.

ನಂದಜೀ ಪಂಡಿತ್, ಎಂಜಿನಿಯರ್/ಸಿ.ಇ.-ಎಂ.ಎಂ.-ಪಿ.ಆರ್.
नंदजी पंडित, अभियंता/सी.ई.-एम.एम.-पी.आर.
NANDJEE PANDIT, ENGINEER/CE-MM-PR
BHEL-EDN, MYSURU ROAD, BENGALURU-560026

For & On behalf of the Principal
(Office Seal) 25/07/24

Place _____
Date _____

R.K. Pandey
25/07/2024

Witness: _____
(Name & Address) _____

ರವೀಂದ್ರ ಕುಮಾರ್ ಪಾಂಡೆಯ್, ಉಪ ಪ್ರಧಾನ ವ್ಯವಸ್ಥಾಪಕರು/ಸಿ.ಇ.-ಎಂ.ಎಂ.-ಪಿ.ಆರ್.
रवींद्र कुमार पांडेय, उप महाप्रबंधक/सी.ई.-एम.एम.-पी.आर.
RABINDRA KUMAR PANDEY, DY. GENERAL MANAGER/CE-MM-PR
BHEL-EDN, MYSURU ROAD, BENGALURU-560026

For & On behalf of the Bidder/ Contractor
(Office Seal)

Witness: _____
(Name & Address) _____

Annexure

Annexure I

Guidelines for Indian Agents

- **Definition of Indian Agent**: An Indian Agent of foreign prinicipal is an individual, a partnership, an association of persons, a private or pubile company, that carries our specific obligation(s) towards processing of BHEL tender or finalization or execution of BHEL's contract on behalf of the foreign supplier.

In case of yes, vendor to note the following and reply accordingly:

i. BHEL shall deal directly with foreign vendors, wherever required, for procurement of goods. However, if the foreign principal desires to avail of the services of an Indian agent, then the foreign principal should ensure compliance to regulatory guidelines - which require mandatory submission of an Agency Agreement.

ii. It shall be incumbent on the Indian agent and the foreign principal to adhere to the relevant guidelines of Government of India, issued from time to time.

iii. The Agency Agreement should specify the precise relationship between the foreign OEM / foreign principal and their Indian agent and their mutual interest in the business. All services to be rendered by agent/ associate, whether of general nature or in relation to the particular contract, must be clearly stated by the foreign supplier/ Indian agent. Any payment, which the agent or associate receives in India or abroad from the OEM, whether as commission or as a general retainer fee should be brought on record in the Agreement and be made explicit in order to ensure compliance to laws of the country.

iv. Any agency commission to be paid by BHEL to the Indian agent shall be in Indian currency only.

v. Tax deduction at source is applicable to the agency commission paid to the Indian agent as per the prevailing rules.

vi. In the absence of any agency agreement, BHEL shall not deal with any Indian agent (authorized representatives / associate / consultant, or by whatever name called) and shall deal directly with the foreign principal only for all correspondence and business purposes.

vii. The "Guidelines for Indian Agents of Foreign Suppliers" enclosed at annexure –'A' shall apply in all such cases.

viii. The supply and execution of the Purchase Order (including indigenous supplies/ service) shall be in the scope of the OEM/ foreign principal. The OEM/ foreign principal should submit their offer inclusive of all indigenous supplies/ services and evaluation will be based on 'total cost to BHEL'. In case OEM/ foreign principal recommends placement of order(s) towards indigenous portion of supplies/ services on Indian supplier(s)/ agent on their behalf, the credentials/ capacity/ capability of the Indian supplier(s)/ agent to make the supplies/ services shall be checked by BHEL as per the extant guidelines of Supplier Evaluation, Approval & Review Procedure (SEARP), before opening of price bids. In this regard, details may be checked as per Annexure-B (copy enclosed). It will be the responsibility of the OEM/ foreign principal to get acquainted with the evaluation requirements of Indian supplier/ agent as per SEARP available on www.bhel.com.

The responsibility for successful execution of the contract (including indigenous supplies/ services) lies with the OEM/ foreign principal. All bank guarantees to this effect shall be in the scope of the OEM/ foreign principal.

---x---

Vendor's Signature with Seal

Annexure-A

Guidelines for Indian Agents of Foreign Suppliers

1.0 There shall be compulsory registration of agents for all Global (Open) Tender and Limited Tender. An agent who is not registered with BHEL shall apply for registration in the registration form in line with SEARP.

1.1 Registered agents will file an authenticated Photostat copy duly attested by a Notary Public/Original certificate of the Principal confirming the agency agreement and giving the status being enjoyed by the agent and the commission/ remuneration/ salary/ retainership being paid by the principal to the agent before the placement of order by BHEL.

1.2 Wherever the Indian representatives have communicated on behalf of their principals and the foreign parties have stated that they are not paying any commission to the Indian agents, and the Indian representative is working on the basis of salary or as retainer, a written declaration to this effect should be submitted by the party (i.e. Principal) before finalizing the order.

2.0 Disclosure of particulars of agents/ representatives in India, if any.

2.1 Tenderers of Foreign nationality shall furnish the following details in their offers:

2.1.1 The Bidder(s)/ Contractor(s) of foreign origin shall disclose the name and address of the agents/ representatives in India if any and the extent of authorization and authority given to commit the Principals. In case the agent/ representative be a foreign Company, it shall be confirmed whether it is existing Company and details of the same shall be furnished.

2.1.2 The amount of commission/ remuneration included in the quoted price(s) for such agents/ representatives in India.

2.1.3 Confirmation of the Tenderer that the commission/ remuneration, if any, payable to his agents/ representatives in India, may be paid by BHEL in Indian Rupees only.

2.2 Tenderers of Indian Nationality shall furnish the following details in their offers:

2.2.1 The Bidder(s)/ Contractor(s) of Indian Nationality shall furnish the name and address of the foreign principals, if any, indicating their nationality as well as their status, i.e. whether manufacturer or agents of manufacturer holding the Letter of Authority of the Principal specifically authorizing the agent to make an offer in India in response to tender either directly or through the agents/ representatives.

2.2.2 The amount of commission/ remuneration included in the price (s) quoted by the Tenderer for himself.

2.2.3 Confirmation of the foreign principals of the Tenderer that the commission/ remuneration, if any, reserved for the Tenderer in the quoted price(s), may be paid by BHEL in India in equivalent Indian Rupees on satisfactory completion of the Project or supplies of Stores and Spares in case of operation items.

2.3 In either case, in the event of contract materializing, the terms of payment will provide for payment of the commission/ remuneration, if any payable to the agents/ representatives in India in Indian Rupees on expiry of 90 days after the discharge of the obligations under the contract.

2.4 Failure to furnish correct and detailed information as called for in paragraph 2.0 above will render the concerned tender liable to rejection or in the event of a contract materializing, the same liable to termination by BHEL. Besides this there would be a penalty of banning business dealings with BHEL or damage or payment of a named sum.

—x—

ANNEXURE - II
LIST OF INTERNATIONAL GATEWAY AIRPORTS

For air based consignment, terms of delivery will be on FCA basis from following listed airports only. Vendors are requested to verify this list for use before submission of offer.

SCHEDULE NO	COUNTRY	CURRENCY CODE	AIRPORT
D01	UK	GBP	LONDON (HEATHROW)
D02	UK	GBP	NEW CASTLE
D03	UK	GBP	OXFORD. CHETLAM
D04	UK	GBP	BRISTOL. WELLINGBOROUGH
D05	UK	GBP	BIRMINGHAM
DO6	UK	GBP	EAST MIDLANDS
D07	UK	GBP	MANCHESTER
D08	UK	GBP	LEEDS
D09	UK	GBP	GLASGOW
D10	FRANCE	EURO	PARIS (ROISSY) & LYON
D11	SWEDEN	EURO	STOCKHOLM
D12	SWEDEN	EURO	GOTHENBERG & MALMO
D13	ITALY	EURO	ROMA, MILAN
D14	ITALY	EURO	TURIN, BOLOGNA, FLORENCE
D15	NETHERLANDS	EURO	AMSTERDAM, ROTTERDAM
D16	AUSTRIA	EURO	VIENNA, LINZ, GRAZ
D17	BELGIUM	EURO	ANTWERP, BRUSSELS
D18	DENMARK	DKK	COPENHAGEN
D19	JAPAN	JPY	TOKYO, OSAKA
D20	SINGAPORE	SGD	SINGAPORE
D21	CANADA	CAD	TORONTO
D22	CANADA	CAD	MONTREAL
D23	USA	USD	NEW YORK, BOSTON
D24	USA	USD	CHICAGO
D25	USA	USD	SAN FRANCISCO, LOS ANGELES
D26	USA	USD	ALANTA, HOUSTON
D27	GERMANY	EURO	MUNICH, KOLN, DUSSELDORF, HANNOVER, HAMBURG, STUTTGART, DAMSTADT, MANIHIEM, NURUMBERG
D28	GERMANY	EURO	FRANKFURT
D29	GERMANY	EURO	BERLIN
D30	SWITZERLAND	SFR	BASLE, ZURICH, GENEVA
D31	SPAIN	EURO	BARCELONA
D32	AUSTRALIA	AUD	SYDNEY
D33	AUSTRALIA	AUD	MELBOURNE
D34	AUSTRALIA	AUD	PERTH
D35	CZECH	EURO	PRAGUE
D36	HONG KONG	HKD	HONG KONG
D37	NEW ZELAND	NZD	AUCKLAND
D38	RUSSIA	USD	MOSCOW
D39	SOUTH KOREA	USD	KIMPO INTERNATIONAL, INCHEON
D40	FINLAND	EURO	HELSINKI
D41	ROMANIA	EURO	BUCHAREST
D42	NORWAY	EURO	OSLO
D43	IRELAND	EURO	DUBLIN
D44	ISRAEL	USD	TEL AVIV
D45	UAE	USD	DUBAI
D46	OMAN	USD	MUSCAT
D47	EGYPT	USD	CAIRO
D48	TAIWAN	USD	TAIPEI
D49	UKRAINE	USD	KIEV
D50	CHINA	USD	SHANGHAI, SHENZHEN
D51	PHILIPINES	USD	MANILA
D52	MALAYSIA	USD	KUALALUMPUR, PE NANG
D53	CYPRUS	USD	LARNACA
D54	SOUTH AFRICA	USD	JOHANNESBERG, DURBAN
D55	SLOVAKIA	EURO	BARTISLOVA
D56	SAUDI ARABIA	SAR	RIYADH
D57	TURKEY	EURO	ISTANBUL
D58	THAILAND	USD	BANGKOK
D59	BRAZIL	USD	SAO PAULO, RIO DE JANEIRO

ANNEXURE – III

DISCREPANCY IN WORDS & FIGURES – QUOTED IN PRICE BID

Following guidelines will be followed in case of discrepancy in words & figures-quoted in price bid:

(a) If, in the price structure quoted for the required goods/services/works, there is discrepancy between the unit price and the total price (which is obtained by multiplying the unit price by the quantity), the unit price shall prevail and the total price corrected accordingly, unless in the opinion of the purchaser there is an obvious misplacement of the decimal point in the unit price, in which case the total price as quoted shall govern and the unit price corrected accordingly.

(b) If there is an error in a total corresponding to the addition or subtraction of subtotals, the subtotals shall prevail and the total shall be corrected; and

(c) If there is a discrepancy between words and figures, the amount in words shall prevail, unless the amount expressed in words is related to an arithmetic error, in which case the amount in figures shall prevail subject to (a) and (b) above.

(d) If there is such discrepancy in an offer, the same shall be conveyed to the bidder with target date upto which the bidder has to send his acceptance on the above lines and if the bidder does not agree to the decision of the purchaser, the bid is liable to be ignored.

ANNEXURE - IV

Electronic Funds Transfer (EFT) OR Paylink Direct Credit Form

Please Fill up the form in **CAPITAL LETTERS** only.
TYPE OF REQUEST(Tick one): _____ CREATE _____ CHANGE

BHEL Vendor / Supplier Code:
Company Name :
Permanent Account Number(PAN):
Address

City: PINCODE STATE

Contact Person(s)
Telephone No:
Fax No:
e-mail id:

1 Bank Name:
2 Bank Address:

3 Bank Telephone No:
4 Bank Account No:
5 Account Type: Savings/Cash Credit
6 9 Digit Code Number of Bank and branch appearing on MICR cheque issued by Bank
7 Bank IFSC Code(applicable for NEFT)
8 Bank IFSC code(applicable for RTGS) (Indian Financial System Code)

A I hereby certify that the particulars given above are true, correct and complete and that I, as a representative for the above named Company, hereby authorise BHEL, EDN, Bangalore to electronically deposit payments to the designated bank account.
B If the transaction is delayed or not effected at all for reasons of incomplete or incorrect information, I would not hold BHEL / transfering Bank responsible.
C This authority remains in full force until BHEL, EDN,Bangalore receives written notification requesting a change or cancellation.
D I have read the contents of the covering letter and agree to discharge the responsibility expected of me as a participant under ECS / EFT.

Date:

Authorised Signatory:
Designation: Telephone No. with STD Code

Company Seal

Bank Certificate

We certify that_____has an Account No_____ with us and we confirm that the bank details given above are correct as per our records.

Date: (.....)
Place: Signature

Please return completed form **along with a blank cancelled cheque or photocopy** thereof to:
Bharath Heavy Electricals Ltd,
Attn:
Electronics Division, Mysore Road,
BANGALORE - 560 026
In case of any Querry, please call concerned purchase executive.

ANNEXURE - V

PRESENT PROCEDURE FOR SALE IN TRANSIT (HIGH SEA SALES)

In case of High Sea Sales, vendor should submit following documents:

1. **ORIGINAL HIGH SEA SALES AGREEMENT**
   - Sale agreement (on Rs. 200/- non-judicial stamp paper & notarised with 2 witnesses with identity) has to be signed between BHEL and the Party importing material. The date of the sale documents should be in between the date of House Air Way Bill / Bill of Lading and before landing of the goods in Indian origin.
   - Following shall be included in the High Sea Sales Agreement:
     "THE BUYER ALSO UNDERTAKE DISCHARGES, THE OBLIGATION AND FULFILLMENT OF CONDITIONS, IF ANY, ATTACHED TO THE IMPORTATION, ASSESSMENT AND CLEARANCE OF THE GOODS IN TERMS CUSTOMS TARIFF ACT 1975, THE CUSTOMS ACT 1962 & RULES & REGULATIONS MADE THERE UNDER AND OTHER RELEVANT ACTS, ORDERS, NOTIFICATIONS".

2. **ORIGINAL INVOICES: INDIGENOUS RUPEE INVOICE & FOREIGN CURRENCY INVOICE**
   - Prices should be C.I.F., designated airport/seaport basis.
   - I.E.C., C.S.T., K.S.T. Nos. to be mentioned.
   - Description of item (Nomenclature), Unit & Quantity in both the Foreign Currency & the Indigenous Invoice in Rupee shall be exactly as per Purchase Order Description of item, Quantity and Unit. The Indigenous Invoice value shall be exactly as per Purchase Order value.
   - Seller should give Foreign Currency Invoice from the original consignor. The Foreign Currency Invoice value should be at least 2% (two per cent) less than the Indigenous Rupee Invoice value in equivalent foreign currency.

4. **ORIGINAL HOUSE AIR WAY BILL/ BILL OF LADING**
   - The sale agents should duly endorse House Air Way Bill (HAWB) for air shipments or original Bill of Lading (O.B.L.) for sea shipments and Foreign Currency Invoice in favour of BHEL-EDN.

5. **ORIGINAL CARGO ARRIVAL NOTICE FROM FORWARDER.**

6. **ORIGINAL DELIVERY ORDER ISSUED IN NAME OF BHEL-EDN.**

7. **ORIGINAL PACKING LIST.**

8. **A LETTER TO THE COMMISSIONER OF CUSTOMS FOR EFFECTING ABOVE SALE.**

9. **A LETTER TO THE DEPUTY ASSESSOR (OCTROI) FOR EFFECTING ABOVE SALE IN FAVOUR OF BHEL.**

REMARKS: In case vendor needs any clarifications on the above, the same may be sought in writing.

Annexure-VI (List of Consortium Banks)

Sl. No.	Name of the bank
1	State Bank of India
2	Canara Bank
3	IDBI Bank Limited
4	ICICI Bank Limited
5	HDFC Bank Limited
6	Axis Bank
7	IndusInd Bank Limited
8	Bank of Baroda
9	Exim Bank
10	Indian Bank
11	Punjab National Bank
12	Union Bank of India
13	Yes Bank Limited
14	RBL Bank Ltd.
15	Standard Chartered Bank
16	Indian Overseas Bank
17	Kotak Mahindra Bank Limited
18	Federal Bank Limited
19	Hongkong and Shanghai Banking Corporation Ltd

Annexure-~~X~~ VII

BANK GUARANTEE FOR PERFORMANCE SECURITY

Bank Guarantee No:

Date:

To

NAME

& ADDRESSES OF THE BENEFICIARY

Dear Sirs,

In consideration of Bharat Heavy Electricals Limited (hereinafter referred to as the 'Employer' which expression shall unless repugnant to the context or meaning thereof, include its successors and permitted assigns) incorporated under the Companies Act, 1956 and having its registered office at _____[1] through its Unit at.....(name of the Unit) having awarded to (Name of the Vendor / Contractor / Supplier) with its registered office at_____[2] hereinafter referred to as the ' Vendor / Contractor / Supplier ', which expression shall unless repugnant to the context or meaning thereof, include its successors and permitted assigns), a contract Ref No.....dated .....[3] valued at Rs.....[4] (Rupees ----------)/FC.....(in words.....) for .....[5] (hereinafter called the 'Contract') and the Vendor / Contractor / Supplier having agreed to provide a Contract Performance Bank Guarantee, equivalent to .....% (.... Percent) of the said value of the Contract to the Employer for the faithful performance of the Contract,

we, ..., (hereinafter referred to as the Bank), having registered/Head office at ..... and inter alia a branch at ..... being the Guarantor under this Guarantee, hereby, irrevocably and unconditionally undertake to forthwith and immediately pay to the Employer any sum or sums upto a maximum amount of Rs -- ---------- [6] (Rupees ----------) without any demur, immediately on first demand from the Employer and without any reservation, protest, and recourse and without the Employer needing to prove or demonstrate reasons for its such demand.

Any such demand made on the Bank shall be conclusive as regards the amount due and payable by the Bank under this guarantee. However, our liability under this guarantee shall be restricted to an amount not exceeding Rs. _____.

We undertake to pay to the Employer any money so demanded notwithstanding any dispute or disputes raised by the Vendor / Contractor / Supplier in any suit or proceeding pending before any Court or Tribunal, Arbitrator or any other authority, our liability under this present being absolute and unequivocal.

The payment so made by us under this Guarantee shall be a valid discharge of our liability for payment thereunder and the Vendor / Contractor / Supplier shall have no claim against us for making such payment.

We the .....bank further agree that the guarantee herein contained shall remain in full force and effect during the period that would be taken for the performance of the said Contract/satisfactory completion of the performance guarantee period as per the terms of the Contract and that it shall continue to be enforceable till

all the dues of the Employer under or by virtue of the said Contract have been fully paid and its claims satisfied or discharged.

We .....BANK further agree with the Employer that the Employer shall have the fullest liberty without our consent and without affecting in any manner our obligations hereunder to vary any of the terms and conditions of the said Contract or to extend time of performance by the said Vendor / Contractor / Supplier from time to time or to postpone for any time or from time to time any of the powers exercisable by the Employer against the said Vendor / Contractor / Supplier and to forbear or enforce any of the terms and conditions relating to the said Contract and we shall not be relieved from our liability by reason of any such variation, or extension being granted to the said Vendor / Contractor / Supplier or for any forbearance, act or omission on the part of the Employer or any indulgence by the Employer to the said Vendor / Contractor / Supplier or by any such matter or thing whatsoever which under the law relating to sureties would but for this provision have effect of so relieving us.

The Bank also agrees that the Employer at its option shall be entitled to enforce this Guarantee against the Bank as a principal debtor, in the first instance without proceeding against the Vendor / Contractor / Supplier and notwithstanding any security or other guarantee that the Employer may have in relation to the Vendor / Contractor / Supplier 's liabilities.

This Guarantee shall remain in force upto and including..... [7] and shall be extended from time to time for such period as may be desired by Employer.

This Guarantee shall not be determined or affected by liquidation or winding up, dissolution or change of constitution or insolvency of the Vendor / Contractor / Supplier but shall in all respects and for all purposes be binding and operative until payment of all money payable to the Employer in terms thereof.

Unless a demand or claim under this guarantee is made on us in writing on or before the .....[5]we shall be discharged from all liabilities under this guarantee thereafter.

We, ... BANK lastly undertake not to revoke this guarantee during its currency except with the previous consent of the Employer in writing.

Notwithstanding anything to the contrary contained hereinabove:

a) The liability of the Bank under this Guarantee shall not exceed..... [6]
b) This Guarantee shall be valid up to .....[7]
c) Unless the Bank is served a written claim or demand on or before _____[8] all rights under this guarantee shall be forfeited and the Bank shall be relieved and discharged from all liabilities under this guarantee irrespective of whether or not the original bank guarantee is returned to the Bank.

We, _____ Bank, have power to issue this Guarantee under law and the undersigned as a duly authorized person has full powers to sign this Guarantee on behalf of the Bank.

For and on behalf of
(Name of the Bank)

Dated.....

Place of Issue.....

[1] *NAME AND ADDRESS OF EMPLOYER i.e Bharat Heavy Electricals Limited*

[2] *NAME AND ADDRESS OF THE VENDOR /CONTRACTOR / SUPPLIER.*

[3] *DETAILS ABOUT THE NOTICE OF AWARD/CONTRACT REFERENCE*

[4] *CONTRACT VALUE*

[5] *PROJECT/SUPPLY DETAILS*

[6] *BG AMOUNT IN FIGURES AND WORDS*

[7] *VALIDITY DATE*

[8] *DATE OF EXPIRY OF CLAIM PERIOD*

Annexure-VIII

F. No. DPE/3(3)/10-Fin.
Government of India
Ministry of Finance
Department of Public Enterprises

Block No. 14, CGO Complex,
Lodi Road, New Delhi-110003
Dated the 29th May, 2023

To,

Chief Executives of all CPSEs

Subject:- Concurrent application of Public Procurement Policy for Micro and Small Enterprises Order, 2012 and Public Procurement (Preference to Make in India) Order, 2017 - regarding

Sir/Madam,

The undersigned is directed to forward herewith a copy of Department of Expenditure O.M. dated 18th May, 2023 on the subject mentioned above for information and strict compliance.

Encl : As stated

(Kailash Bhandari)
Deputy Director
Tel : 2436-6247

Copy to :- Shri Kanwalpreet, Director, Department of Expenditure, Room No. 264-C, North Block, New Delhi.

No.F.1/4/2021-PPD
Government of India
Ministry of Finance
Department of Expenditure
Public Procurement Division
*****

264-C, North Block, New Delhi.
18.05.2023.

OFFICE MEMORANDUM

Subject: Concurrent application of Public Procurement Policy for Micro and Small Enterprises Order, 2012 and Public Procurement (Preference to Make in India) Order, 2017.

The undersigned is directed to refer two Preferential Procurement Orders mandated for the Public Procurement in India, namely:

i. Public Procurement Policy for Micro and Small Enterprises (MSEs) Order dated 23.03.2012 (PPP-MSE Order) issued by Ministry of Micro, Small and Medium Enterprises (MoMSME) in exercise of the powers conferred in Section 11 of the MSME Development Act, 2006. (Last revised on 09.11.2018)

ii. Public Procurement (Preference to Make in India) Order, 2017 (PPP-MII order), under Rule 153(iii) of the General Financial Rules (GFRs) 2017, approved by the Cabinet. Implementation of this PPP-MII order is monitored by Department for Promotion of Industry and Internal Trade (DPIIT). (Last revised on 16.09.2020.)

2. It has been brought to the notice of this Department that concurrent application of these two orders are creating confusion to the procuring entities and different procuring entities interpret them differently. In order to bring predictability both to the procuring entities as well as bidders, following guidelines are being issued.

Guidelines

3. The Class-I local suppliers, under PPP-MII Order, participating in any government tender, may or may not be MSEs, as defined under the MSME Act. Similarly, MSEs participating in any government tender, may or may not be Class-I local suppliers. Suppliers may be categorised in following four broad categories for consideration or applicability of purchase preference:

Category	Terminology
Supplier is both MSE & Class-I local supplier.	"MSE Class-I local supplier"
Supplier is MSE but not Class-I local supplier.	"MSE but non-Class-I local supplier"
Supplier is not MSE but is Class-I local supplier.	"Non-MSE but Class-I local supplier"
Supplier is neither MSE nor Class-I local.	"Non-MSE non-Class-I local supplier"

4. The applicability of PPP-MSE Order and PPP-MII Order in various scenarios, involving simultaneous purchase preference to MSEs and Class-I local suppliers under PPP-MSE Order and PPP-MII Order respectively, shall be as under:

a) *Items covered under Para 3(a) of PPP- MII Order, 2017 for which Nodal Ministry has notified sufficient local capacity and competition:* For these items, only Class-I local suppliers are eligible to bid irrespective of purchase value. Hence, Class-II local suppliers or Non-local suppliers, including MSEs which are Class-II local suppliers/ Non-local suppliers, are not eligible to bid. Possible scenarios can be as under:

   (i) L-1 is "MSE Class-I local supplier" - 100% of the tendered quantity is to be awarded to L-1.

   (ii) L-1 is "Non-MSE but Class-I local supplier" - Purchase preference is given to MSEs as per PPP-MSE Order. Balance quantity is to be awarded to the L-1 bidder.

b) *Items reserved exclusively for procurement from MSEs as per PPP-MSE Order:* These items are reserved exclusively for purchase from MSEs. Hence, non-MSEs are not eligible to bid for these items. Possible scenarios can be as under:

   (i) L-1 is "MSE Class-I local supplier" - 100% of the tendered quantity is to be awarded to L-1.

   (ii) L-1 is "MSE non-Class–I local supplier" - Purchase preference is to be given to Class-I local supplier as per PPP-MII Order. Balance quantity, is to be awarded to L-1 bidder.

c) *If items are neither notified for sufficient local capacity nor reserved for MSEs, then the process will be as follows:*

   c (a) Items covered under Para 3A(b) of PPP-MII Order are divisible items and both MSEs as well as Class-I local suppliers are eligible for purchase preference. Possible scenarios can be as under:

      (i) L-1 is "MSE Class-I local supplier" - 100% of the tendered quantity is to be awarded to L-1.

      (ii) L-1 is "Non-MSE but Class-I local supplier" - Purchase preference is to be given to MSEs, if eligible, as per PPP-MSE Order. Balance quantity is to be awarded to L-1 bidder.

      (iii) L-1 is "MSE but non-Class-I local supplier" - Purchase preference is to be given to Class-I local suppliers, if eligible, as per PPP-MII Order. Balance quantity is to be awarded to L-1 bidder.

      (iv) L-1 is "Non-MSE non-Class-I local supplier" - Purchase preference is to be given to MSEs as per PPP-MSE Order. Thereafter, purchase preference is to be given to Class-I local suppliers for "50% of the tendered quantity minus quantity allotted to MSEs

above" as per PPP- MII Order. For the balance quantity, contract is to be awarded to L-1 bidder. *(Kindly refer to the illustrative example in the annexure).*

c (b) Items covered under Para 3A(c) of PPP-MII Order, 2017 are non-divisible items and both MSEs as well as Class-I local suppliers are eligible for purchase preference. Possible scenarios can be as under:

(i) L-1 is "MSE Class-I local supplier" - Contract is awarded to L-1.

(ii) L-1 is not "MSE Class-I local supplier" but the "MSE Class-I local supplier" falls within 15% margin of purchase preference - Purchase preference is to be given to lowest quoting "MSE Class-I local supplier". If lowest quoting "MSE Class-I local supplier" does not accept the L-1 rates, the next higher "MSE Class-I local supplier" falling within 15% margin of purchase preference is to be given purchase preference and so on.

(iii) If conditions mentioned in sub paras (i) and (ii) above are not met i.e. L-1 is neither "MSE Class-I local supplier" nor "MSE Class-I local supplier" is eligible to take benefit of purchase preference, the contract is to be awarded/ purchase preference to be given in different possible scenarios as under:

A. L1 is "MSE but non-Class-I local supplier" or "Non-MSE but Class-I local supplier" – Contract is be awarded to L1.

B. L1 is "Non-MSE non-Class-I local supplier" - First purchase preference to be given to MSE as per PPP-MSE Order. If MSE not eligible/ does not accept - purchase preference to be given to Class- I Local supplier as per PPP-MII Order. If Class-I Local supplier also not eligible/ does not accept – contract to be awarded to L-1.

d) *Items reserved for both MSEs and Class-I local suppliers*: These items are reserved exclusively for purchase from MSEs as well as Class-I local suppliers. Hence, only "MSE Class-I local supplier" are eligible to bid for these items. Non-MSEs/Class-II local suppliers/ Non-local suppliers cannot bid for these items. Hence the question of purchase preference does not arise.

e) Non-local suppliers, including MSEs falling in the category of Non-local suppliers, shall be eligible to bid only against Global Tender Enquiry.

18/5/2023

(Kanwalpreet)
Director
Tel.:-223093811; email: - kanwal.irss@gov.in

To

1. Secretaries of all Central Government Ministries/ Departments.
2. Secretary Department of Public Enterprises with a request for issuing suitable instructions to all Central Public Sector Enterprises in this regard.

Annexure

Example explaining applicability in scenario explained in para 4 c (a)(iv)

(Scenario: Divisible items, both MSEs as well as Class-I local suppliers eligible for purchase preference and L-1 is "Non-MSE non-Class-I local supplier")

Item – Desktop computer

Qty – 50 Nos.

Details of bids received

Sr. No.	Name of bidder	Rates quoted	Price Ranking	Status of bidder
1.	A	100	L1	"Non-MSE non- Class-I local supplier"
2.	B	110	L2	"Non-MSE but Class-I local supplier"
3.	C	112	L3	"MSE but non- Class-I local supplier"
4.	D	115	L4	"Non-MSE but Class-I local supplier"
5.	E	118	L5	"MSE but non- Class-I local supplier"
6.	F	120	L6	"MSE Class-I local supplier"

1. In this case, first purchase preference is to be given to MSEs as per PPP-MSE Order for 25% of tendered quantity of 50 Nos. i.e. 12.5 Nos. (rounded off to the next whole number say 13 Nos). Accordingly, invite L3 (bidder C), whose quoted rates falls within 15% margin of purchase preference to match L1 price i.e. Rs. 100/- for quantity of 13 Nos. Bidder "E" and "F", although MSEs, will not get purchase preference since their quoted rates don't fall within 15% margin of purchase preference. Bidder C will be considered for order of 13 Nos. on confirmation of reduction of price.

2. For 50% of balance quantity of 37 number (tendered quantity of 50 – 13 awarded to bidder C; assuming bidder C has confirmed to accept L1 rates), purchase preference will be given to lowest Class-I local supplier as per PPP-MII Order. Accordingly, bidder B will be invited to match L-1 price for 50% of 37 Nos i.e. 18.5 (say 19 Nos of computers). If bidder "B" does not accept the L1 price i.e. price of Rs. 100/- per unit, next higher Class-I local supplier falling within 20% margin of purchase preference, i.e. bidder "D", may be invited to match L-1 price for 19 Nos. of computers and so on.

3. For remaining quantity i.e. 18 Nos (50-13-19), the contract will be awarded to lowest quoting bidder i.e. Bidder "A", who is L-1 in the example.

***

Annexure-X

Restrictions under Rule 144(xi) of General Financial Rules, 2017 amendment dt: 23.07.2020

I. Any bidder from a country which shares a land border with India will be eligible to bid in this tender only if the bidder is registered with the Competent Authority.

II. "Bidder" (including the term 'tenderer', 'consultant' or 'service provider' in certain contexts) means any person or firm or company, including any member of a consortium or joint venture (that is an association of several persons, or firms or companies), every artificial juridical person not falling in any of the descriptions of bidders stated hereinbefore, including any agency branch or office controlled by such person, participating in a procurement process.

III. "Bidder from a country which shares a land border with India" for the purpose of this Order means :-

a. An entity incorporated, established or registered in such a country; or

b. A subsidiary of an entity incorporated, established or registered in such a country; or

c. An entity substantially controlled through entities incorporated, established or registered in such a country; or

d. An entity whose *beneficial owner* is situated in such a country; or

e. An Indian (or other) agent of such an entity; or

f. A natural person who is a citizen of such a country; or

g. A consortium or joint venture where any member of the consortium or joint venture falls under any of the above

IV. The *beneficial owner* for the purpose of (iii) above will be as under:

1. In case of a company or Limited Liability Partnership, the beneficial owner is the natural person(s), who, whether acting alone or together, or through one or more juridical person, has a controlling ownership interest or who exercises control through other means.

Explanation--

a. "Controlling ownership interest" means ownership of or entitlement to more than twenty-five per cent of shares or capital or profits of the company;

b. "Control" shall include the right to appoint majority of the directors or to control the management or policy decisions including by virtue of their shareholding or management rights or shareholders agreements or voting agreements;

2. In case of a partnership firm, the beneficial owner is the natural person(s) who, whether acting alone or together, or through one or more juridical person, has ownership of entitlement to more than fifteen percent of capital or profits of the partnership;

3. In case of an unincorporated association or body of individuals, the beneficial owner is the natural person(s), who, whether acting alone or together, or through one or more juridical person, has ownership of or entitlement to more than fifteen percent of the property or capital or profits of such association or body of individuals;

4. Where no natural person is identified under (1) or (2) or (3) above, the beneficial owner is the relevant natural person who holds the position of senior managing official;

5. In case of a trust, the identification of beneficial owner(s) shall include identification of the author of the trust, the trustee, the beneficiaries with fifteen percent or more interest in the trust and any other natural person exercising ultimate effective control over the trust through a chain of control or ownership.

V. An Agent is a person employed to do any act for another, or to represent another in dealings with third person.

ಭಾರತ್ ಹೆವಿ ಎಲೆಕ್ಟ್ರಿಕಲ್ಸ್ ಲಿಮಿಟೆಡ್
भारत हेवी इलेक्ट्रिकल्स लिमिटेड
Bharat Heavy Electricals Ltd.,
(A Government of India undertaking)
Electronics Division
PB 2606 , Mysore Road Bangalore , 560026 INDIA

CE: PR: 002- Rev 03

GENERAL COMMERCIAL CONDITIONS FOR CONTRACT

These 'General Commercial Conditions for Contract for Purchase' herein after referred to as GCC apply to all enquiries, tenders, requests for quotations, orders, contracts and agreements concerning the supply of goods and the rendering of related services (hereinafter referred to as "deliveries") to Bharat Heavy Electricals Limited and any of its units, regions or divisions (hereinafter referred to as "BHEL" or the Purchaser) or its projects/ customers.

Any deviations from or additions to these GCC require BHEL's express written consent. The general terms of business or sale of the vendor shall not apply to BHEL. Acceptance, receipt of shipments or services or effecting payment shall not mean that the general terms of business or sale of the vendor have been accepted.

Orders, agreements and amendments thereto shall be binding if made or confirmed by BHEL in writing. Only the Purchasing department of BHEL is authorized to issue the Purchase Order or any amendment thereof.

Definitions: Throughout these conditions and in the specifications, the following terms shall have the meanings assigned to them, unless the subject matter or the context requires otherwise.

a) 'The Purchaser' means Bharat Heavy Electricals Limited, Electronics division, Mysore road, Bangalore 560 026, a Unit of Bharat Heavy Electricals Limited (A Govt. of India Undertaking) incorporated under the Companies Act having its registered office at BHEL House, Siri Fort, New Delhi-110049, India and shall be deemed to include its successors and assigns. It may also be referred to as BHEL.
b) 'The vendor' means the person, firm, company or organization on whom the Purchase Order is placed and shall be deemed to include the vendor's successors, representative heirs, executors and administrator as the case may be. It may also be referred to as Seller, Contractor or Supplier.
c) 'Contract' shall mean and include the Purchase Order incorporating various agreements, viz. tender/ RFQ, offer, letter of intent/acceptance/ award, the General Conditions of Contract and Special Conditions of Contract for Purchase, Specifications, Inspection/ Quality Plan, Schedule of Prices and Quantities, Drawings, if any enclosed or to be provided by BHEL or his authorized nominee and the samples or patterns if any to be provided under the provisions of the contract.
d) 'Parties to the Contract' shall mean the 'The Vendor' and the Purchaser as named in the main body of the Purchase Order.

Order of Precedence:

In case of any inconsistency or contradiction between any of the documents, the order of precedence shall be Purchase Order, LOI / LOA, Special Conditions of Contract and General Conditions of Contract for commercial conditions; and specific agreement on technical conditions, RFQ/offer and specification for Technical Conditions.

Interpretation:

In the contract, except where the context requires otherwise:

a) words indicating one gender include all genders;
b) words indicating the singular also include the plural and words indicating the plural also include the singular;

c) provisions including the word "agree", "agreed" or "agreement" require the agreement to be recorded in writing, and
d) "Written" or "in writing" means hand-written, type-written, printed or electronically made, and resulting in a permanent record.

Applicable Conditions:

1. Price Basis: All prices shall be firm until the purchase order is executed / completed in all respects. No price variations / escalation shall be permitted.

2. Ordering and confirmation of Order: Vendor shall send the order acceptance on their company letter head/ through e-mail within a week from the date of receipt of Purchase Order or such other period as specified/ agreed by BHEL. BHEL reserves the right to revoke the order placed if the order confirmation differs from the original order placed. The acceptance of goods/services/supplies by BHEL as well as payments made in this regard shall not imply acceptance of any deviations.
   The purchase order will be deemed to have been accepted if no communication to the contrary is received within one week (or the time limit as specified/agreed by BHEL) from the date of receipt of the purchase order.

3. Documentation: After receipt of Purchase Order, vendor should submit necessary documents (if & as applicable) like drawings specified, bill of materials, datasheets, catalogues, quality plan, test procedure, type test report, O & M Manuals and/or any other relevant documents as per Specification/Purchase Order, as and when required by BHEL/Customer.
   At any stage within the contract period, the vendor shall notify of any error, fault or other defect found in BHEL's documents /specifications or any other items for reference. If and to the extent that (taking account of cost and time) any vendor exercising due care would have discovered the error, fault or other defect when examining the documents/specifications before submitting the tender, the time for completion shall not be extended. However if errors, omissions, ambiguities, inconsistencies, inadequacies or other defects are found in the vendor's documents, they shall be corrected at his cost, notwithstanding any consent or approval.

4. Penalty:

a. For delay in documentation: In the event of delay in submission of complete set of specified documents ((like drawings, bill of materials, datasheets, catalogues, quality plan etc. as called in tender specifications including soft copies wherever applicable) in required sets beyond two(02) weeks (or as agreed/indicated in the SCC/Purchase Order) from the date of receipt of Purchase Order(by email), penalty at 0.5% (half percent) per week or part thereof, limited to a maximum of 5% (five percent) of the basic material value of the Purchase Order will be applicable.

   Penalty for delayed documentation if applicable, shall be deducted at the time of first supply payment. If penalty is applicable for duration of less than a week, penalty @ 0.5% (half percent) of the basic material value will be deducted. GST as applicable will be recovered along with penalty amount.

b. For delay in delivery: In the event of delay in agreed contractual delivery as per Purchase Order, penalty @ 0.5 % (half percent) per week or part thereof but limited to a max of 10% (ten percent) value of undelivered portion (basic material cost) will be applicable. Delivery will commence from the date of issue of Manufacturing clearance along with approved document. The date for which Inspection call is issued by vendor along with test certificates / test reports /Certificate of Conformance / calibration reports, as proof of completion of manufacturing will be treated as date of deemed delivery for penalty calculation. In the absence of furnishing such document indicated above as proof of completion of manufacturing along with inspection call, actual date of inspection will be considered as date of deemed delivery and BHEL will not be responsible for delay in actual date of inspection.

   Penalty for delayed delivery if applicable, shall be deducted at the time of first supply payment. If penalty is applicable for duration of less than a week, penalty @ 0.5% (half percent) of the basic material value will be

deducted.

5. Contract variations (Increase or decrease in the scope of supply): BHEL may vary the contracted scope as per requirements at site. If vendor is of the opinion that the variation has an effect on the agreed price or delivery period, BHEL shall be informed of this immediately in writing along with technical details. Where unit rates are available in the Contract, the same shall be the basis for such additional work. Vendor shall not perform additional work before BHEL has issued written instructions/ amendment to the Purchase Order to that effect. The work which the vendor should have or could have anticipated in terms of delivering the service(s) and functionality (i.e.) as described in this agreement, or which is considered to be the result of an attributable error on the vendor's part, shall not be considered additional work.

6. Pre-dispatch inspection at Seller premises: Before dispatch, the goods will be inspected by Buyer / Consignee or their Authorized Representative or by Nominated External Inspection Agency (independently or jointly with Buyer or Consignee as decided by the Buyer) at Seller premises (or at designated place for inspection as declared / communicated by the seller) for their compliance to the contract specification. For in-house testing, the Sellers will provide necessary facilities free of cost.

   Prior written notice of at least 10 days shall be given along with internal test certificates/COC and applicable test certificates. Buyer will notify the Seller about the Authorized Representative/ Nominated External Inspection Agency and the date for testing. Scope of inspection is limited to 'approved Quality plan or QA Checklist or Purchase specification'. BHEL reserves the right for conducting repeat test, if required. All tests have to be conducted as applicable in line with approved Quality plan or QA Checklist or Purchase specification and original reports shall be furnished to BHEL-EDN, Bangalore for verification/acceptance for issue of dispatch clearance.

   All costs related to re-inspection(s) shall be borne by vendor. Whether the Contract provides for tests on the premises of the vendor or any of his Sub-contractor/s, vendor shall be responsible to provide such assistance, labour, materials, electricity, fuel, stores, apparatus, instruments as may be required and as may be reasonably demanded to carry out such tests efficiently. Cost of any type test or such other special tests shall be borne by BHEL only if specifically agreed to in the purchase order.

7. Transit Insurance: Transit insurance coverage between vendor's works and project site shall be to the account of BHEL, unless specifically agreed otherwise. However, vendor shall send intimation directly to insurance agency (as mentioned in dispatch instructions issued by BHEL) through fax/courier/e-mail, immediately on dispatch of goods for covering insurance. A copy of such intimation sent by vendor to insurance agency shall be given to BHEL along with dispatch documents. Dispatch documents will be treated as incomplete without such intimation copy. BHEL shall not be responsible for sending intimations to insurance agency on behalf of the vendor.

8. Mode of dispatch:
   Indigenous Scope: By road on Door Delivery Consignee Copy attached basis through your approved transporter (unless otherwise indicated in Dispatch Instructions), only on receipt of Despatch Clearance from BHEL.
   Import Scope: By Air/Sea through BHEL approved Freight Forwarder/supplier approved Consolidator respectively as per agreed contractual terms, only on receipt of Dispatch Clearance from BHEL.

9. Changes in Statutory levies:
   If any rates of Tax are increased or decreased, a new Tax is introduced, an existing Tax is abolished, or any change in interpretation or application of any Tax occurs in the course of the execution of Contract, which was or will be assessed on the bidder in connection with performance of the Contract, an equitable adjustment of the Contract Price shall be made to fully take into account any such change by addition to the Contract Price or deduction there from, as the case may be. However, these adjustments would be restricted to direct transactions between BHEL and the bidder /agent of foreign bidder (if applicable). These adjustments shall not be applicable on procurement of raw materials, intermediary components etc. by the bidder /agent.

It is the obligation on the part of supplier to discharge his liability by payment of GST to Government of India in cash (or) utilization of input Tax credit in respect of such supply or services through GST invoice under this contract, so that BHEL will avail input tax credit on such supply. In the event that the input tax credit of the GST charged by the supplier is denied by the tax authorities to BHEL due to reasons attributable to supplier, BHEL shall be entitled to recover such amount from the supplier by way of adjustment from the next invoice or from Bank Guarantee. In addition to the amount of GST, BHEL shall also be entitled to recover interest and penalty, in case same is imposed by the tax authorities on BHEL.

If BHEL is not able to avail the credit of CGST & SGST/IGST, partially or entirely because the supplier issued a defective invoice or failed to produce the requisite documents, then the supplier shall immediately indemnify BHEL for such loss of tax credit which would be otherwise available to BHEL. BHEL, in such case, may, at its sole discretion, decide to recover such loss by way of deduction from payment due to the supplier or invoking the contract Performance Bank Guarantee.

The classification of goods as per GST should be correctly done by the supplier to ensure that ITC benefit is not lost to the BHEL on account of any error on the part of the supplier.

Any statutory increase in the CGST & SGST / IGST or any new or additional taxes or duties imposed within the Contractual Delivery Period or extended Contractual Delivery Period shall be to BHEL's account whereas if it is after Contractual Delivery period, it shall be to supplier's account. Any corresponding decrease on account of above shall be passed on to BHEL.

In case GST or any taxes or duties is not applicable at present but become applicable at the time of contractual delivery period due to any reason other than statutory, the same shall be borne by supplier.

10. Availing duty/tax exemption benefits by bidder, wherever applicable: BHEL shall issue the required Certificate/s, as per relevant policies of the Govt. of India, to facilitate the bidders to avail any such benefits under the Contract. In case of failure of the bidders to receive the benefits partly or fully from the Govt. of India and/or in case of any delay in receipt of such benefits, BHEL shall neither be liable nor responsible in any manner whatsoever.

11. Taxes against sub-vendor dispatches: All taxes/levies, as applicable in respect of all components, equipments and material to be despatched directly from the sub-vendor's works to Site irrespective of the fact whether such taxes and levies are assessable and chargeable on Vendor or the BHEL, shall be to the vendor's account and no separate claim in this regard will be entertained by BHEL.

12. High Sea Sales (HSS): Customs clearance of the consignment landed on Indian Sea/Air ports will be done by BHEL based on the original HSS documents provided by vendors.
    Any delay in submission of complete/correct HSS documents to BHEL may incur demurrage charges. All demurrage charges on account of incomplete /incorrect HSS documents submission by vendor will be to vendor's account and all such charges will be recovered from any of the available vendor bills with BHEL.

13. Packaging and dispatch: The Seller shall package the goods safely and carefully and pack them suitably in all respects considering the peculiarity of the material for normal safe transport by Sea/ Air / Rail/ Road to its destination suitably protected against loss, damage, corrosion in transit and the effect of tropical salt laden atmosphere. The packages shall be provided with fixtures/ hooks and sling marks as may be required for easy and safe handling. If any consignment needs special handling instruction, the same shall be clearly marked with standard symbols / instructions. Hazardous material should be notified as such and their packing, transportation and other protection must conform to relevant regulations.
    The packing, shipping, storage and processing of the goods must comply with the prevailing legislation and regulations concerning safety, the environment and working conditions. *For facilitating smooth movement of shipment, the consignment has to be in stackable condition*. Any Imported/Physical Exports items packed with raw/ solid wood packing material should be treated as per ISPM – 15 (fumigation) and accompanied by Phytosanitory/ Fumigation certificate. If safety information sheets (MSDS – Material Safety Data Sheet)

exist for an item or the packaging, vendor must provide this information without fail along with the consignment.

Each package must be marked with Consignee name, Purchase order number, Package number, Gross weight and net weight, dimensions (LxBxH) and Seller's name. Packing list of goods inside each package with PO item number and quantity must also be fixed securely outside the box to indicate the contents of each box. Total number of packages in the consignment must also be indicated in the packing list.

Separate packing & identification of items should be as follows.

1. Main Scope - All items must be tagged with part no. & item description.
2. Commissioning accessories/spares - All items must be tagged with part no. & item description.
3. Mandatory spares - All items must be tagged with part no. & item description.

Nevertheless, vendor shall adhere to dispatch & packing instructions issued by BHEL at the time of dispatch.

14. Assignment of Rights & Obligations; Subcontracting: Vendor is not permitted to subcontract the delivery or any part thereof to third party or to assign the rights and obligations resulting from this agreement in whole or in part to third parties without prior written permission from BHEL. Any permission or approval given by the BHEL shall, however, not absolve the vendor of the responsibility of his obligations under the Contract.

15. Progress report: Vendor shall render such report as to the progress of work and in such form as may be called for by the concerned purchase officer from time to time. The submission and acceptance of such reports shall not prejudice the rights of BHEL in any manner.

16. Non-disclosure and Information Obligations: Vendor shall provide with all necessary information pertaining to the goods as it could be of importance to BHEL. Vendor shall not reveal any specified confidential information that may be divulged by BHEL to Vendor's employees not involved with the tender/ contract & its execution and delivery or to third parties, unless BHEL has agreed to this in writing beforehand. Vendor shall not be entitled to use the BHEL name in advertisements and other commercial publications without prior written permission from BHEL.

17. Cancellation /Termination of contract: BHEL shall have the right to completely or partially terminate the agreement by means of written notice to that effect. Termination of the Contract, for whatever reason, shall be without prejudice to the rights of the parties accrued under the Contract up to the time of termination.

    BHEL shall have the right to cancel/foreclose the Order/ Contract, wholly or in part, in case it is constrained to do so on account of any decline, diminution, curtailment or stoppage of the business.

18. Breach of Contract, Remedies & Termination: In case of breach of contract (failure of supplier), wherever the value of Performance security available with BHEL against the said contract is atleast 10% of the contract value, the same shall be encashed.

    In case the value of the security instruments available with BHEL is less than 10% of the contract value, the balance amount will be recovered from other financial remedies (i.e. available bills of the contractor, retention amount, etc. with BHEL) or legal remedies shall be pursued.

    Further, levy of liquidated damages, debarment, termination, de-scoping, short-closure, etc. shall be applied as per provisions of the contract.

19. Shortages: In the event of shortage on receipt of goods and/or on opening of packages at site, all such shortages, caused by supplier's act or omission, shall be made good at free of cost within a reasonable time that BHEL may allow from such intimation.

    Transit Damages: In the event of receipt of goods in damaged condition or having found them so upon opening of packages at site, supplier shall make good of all such damages within a reasonable time from such intimation by BHEL. In case BHEL raises an insurance claim, the cost of material limited to insurance settled amount less handling charges will be reimbursed to supplier.

20. Remedial work: Notwithstanding any previous test or certification, BHEL may instruct the vendor to remove and replace materials/goods or remove and re-execute works/services which are not in accordance with the purchase order. Similarly BHEL may ask the vendor to supply materials or to execute any services which are urgently required for any safety reasons, whether arising out of or because of an accident, unforeseeable event or otherwise. In such an event, Vendor shall provide such services within a reasonable time as specified by BHEL.

21. Indemnity Clause: Vendor shall comply with all applicable safety regulations and take care for the safety of all persons involved. Vendor is fully responsible for the safety of its personnel or that of his subcontractor's men / property, during execution of the Purchase Order and related services. All statutory payments including PF, ESI or other related charges have to be borne by the vendor. Vendor is fully responsible for ensuring that all legal compliances are followed in course of such employment. Vendor shall fully indemnify and keep indemnified BHEL against all claims of whatsoever nature arising during the course and out of execution of this Order/Contract.

22. Product Information, Drawings and Documents: All specified drawings, technical documents or other technical information received by Vendor from BHEL or vice versa shall not, without the consent of the other party, be used for any other purpose than that for which they were provided. They may not, without the consent of the Disclosing party, otherwise be used or copied, reproduced, transmitted or communicated to third parties. All information and data contained in general product documentation, whether in electronic or any other form, are binding only to the extent that they are by reference expressly included in the contract.

    Vendor, as per agreed date/s but not later than the date of delivery, provide free of charge information and drawings which are necessary to permit and enable BHEL to erect, commission, operate and maintain the product. Such information and drawings shall be supplied in as many numbers of copies as may be agreed upon.

    All intellectual properties, including designs, drawings and product information etc. exchanged during the formation and execution of the Contract shall continue to be the property of the disclosing party.

23. Intellectual Property Rights, Licenses: If any Patent, design, Trade mark or any other intellectual property rights apply to the delivery (goods/related service) or accompanying documentation shall be the exclusive property of the Vendor and BHEL shall be entitled to the legal use thereof free of charge by means of a non-exclusive, worldwide, perpetual license. All intellectual property rights that arise during the execution of the Purchase Order/ contract for delivery by vendor and/or by its employees or third parties involved by the vendor for performance of the agreement shall belong to BHEL. Vendor shall perform everything necessary to obtain or establish the above mentioned rights. The Vendor guarantees that the delivery does not infringe on any of the intellectual property rights of third parties. The Vendor shall do everything necessary to obtain or establish the alternate acceptable arrangement pending resolution of any (alleged) claims by third parties. The Vendor shall indemnify BHEL against any (alleged) claims by third parties in this regard and shall reimburse BHEL for any damages suffered as a result thereof.

24. Force Majeure: If at any time during the continuance of the Contract, the performance in whole or in part by either party of any obligation under this Contract shall be prevented or delayed by the reasons of any war, hostility, acts of the public enemy, epidemics, civil commotion, sabotage, fires, floods, explosion, quarantine restrictions, strikes, lockouts or act of God provided notice of happening of such event duly evidenced with documents is given by one party to the other within 10 days from the date of occurrence thereof, neither party shall be by reasons of such event, be entitled to terminate the Contract nor shall either party have any claim for damages against the other in respect of such non-performance or the delay in performance, and deliveries under the contract shall be resumed as soon as practicable after such event has come to an end or ceased to exist, and the decision of the Buyer as to whether the deliveries have been so resumed or not, shall be final and conclusive.

    If force majeure applies, dates by which performance obligations are scheduled to be met will be extended for a period of time equal to the time lost due to any delay so caused.

Notwithstanding above provisions, in an event of Force Majeure, BHEL reserves for itself the right to cancel the order/ contract, wholly or partly, in order to meet the overall project schedule and make alternative arrangements for completion of deliveries and other schedules.

25. Warranty:
Wherever required, and so provided in the specifications/ Purchaser Order, the Seller shall ensure that the goods supplied shall comply with the specifications laid down, for materials, workmanship and performance.

Unless otherwise specified in SCC, warranty period shall be applicable for a period of 24 months from the date of delivery of goods or 18 months from the date of commissioning of goods, whichever is earlier.

The warranty period as described above shall apply afresh to replaced, repaired or re-executed parts of a delivery. Unless otherwise specifically provided in the Purchase Order, Vendor's liability shall be co terminus with the expiration of the applicable warranty period.

26. Limitation of Liability: Vendor's liability towards this contract is limited to a maximum of 100% of the contract value and consequential damages are excluded. However the limits of liability will have no effect in cases of criminal negligence or wilful misconduct.

The total liability of Vendor for all claims arising out of or relating to the performance or breach of the Contract or use of any Products or Services or any order shall not exceed the total Contract price.

27. Liability during warranty: Vendor shall arrange replacement / repair of all the defective materials / services under its obligation during the warranty period. The rejected goods shall be taken away by vendor and replaced / repaired. In the event of the vendor's failure to comply, BHEL may take appropriate action including disposal of rejections and replenishment by any other sources at the cost and risk of the vendor.

In case, defects attributable to vendor are detected during Warranty period or where the commissioning call is issued within the warranty period, vendor shall be responsible for replacement/ repair of the goods as required by BHEL at vendor's cost even after expiry of warranty period.

Further if the equipment or any part thereof cannot be used by reason of such defect and/or making good of such defect, the warranty period of the equipment or such part, as the case may be, shall be extended by a period equal to the period during which the equipment or such part cannot be used by BHEL because of any of the aforesaid reasons. Upon correction of the defects in the facilities or any part thereof by repair/replacement, such repair/replacement shall have the warranty period for a period of twelve (12) months from the time such replacement/repair of the equipment or any part thereof has been completed.

28. Liability after warranty period: At the end of the warranty, the Vendor's liability ceases except for latent defects. For the purpose of this clause, latent defects shall be the defects inherently lying within the material or arising out of design deficiency which do not manifest themselves during the warranty Period, but later. The Contractor's liability for latent defects warranty for the equipment including spares shall be limited to a period of six months from the end of the warranty period of the respective equipment including spares or first time commissioning, whichever is later but not later than one (01) year from the date of expiry of warranty period.

29. Compliance with Laws: Vendor shall, in performing the contract, comply with all applicable laws. The vendor shall make all remittances, give all notices, pay all taxes, duties and fees, and obtain all permits, licences and approvals, as required by the laws in relation to the execution and completion of the contract and for remedying of any defects; and the Contractor shall indemnify and hold BHEL harmless against and from the consequences of any failure to do so.

30. Settlement of Disputes:Except as otherwise specifically provided in the Purchase Order, decision of BHEL shall be binding on the vendor with respect to all questions relating to the interpretation or meaning of the

terms and conditions and instructions herein before mentioned and as to the completion of supplies/work/services, other questions, claim, right, matter or things whatsoever in any way arising out of or relating to the contract, instructions, orders or these conditions or otherwise concerning the supply or the execution or failure to execute the order, whether arising during the schedule of supply/work or after the completion or abandonment thereof. Any disputes or differences among the parties shall to the extent possible be settled amicably between the parties thereto, failing which the disputed issues shall be settled through arbitration. Vendor shall continue to perform the contract, pending settlement of dispute(s).

31. Arbitration Clause in case of Contract with vendors other than Public Sector Enterprise (PSE) or a Government Department:

    Arbitration & Conciliation:

    The parties shall attempt to settle any disputes or difference arising out of the formation, breach, termination, validity or execution of the Contract; or, the respective rights and liabilities of the parties; or, in relation to interpretation of any provision of the Contract; or, in any manner touching upon the Contract, or in connection with this contract through friendly discussions. In case no amicable settlement can be reached between the parties through such discussions, in respect of any dispute; then, either Party may, by a notice in writing to the other Party refer such dispute or difference to the sole arbitration of an arbitrator appointed by Head of the BHEL–EDN. Such Sole Arbitrator appointed, shall conduct the arbitration in English language.

    The Arbitrator shall pass a reasoned award and the award of the Arbitration shall be final and binding upon the Parties.

    Subject as aforesaid, the provisions of Arbitration and Conciliation Act 1996 (India) or statutory modifications or re-enactments thereof and the rules made thereunder and for the time being in force shall apply to the arbitration proceedings under this clause. The seat of arbitration shall be Bangalore.
    The cost of arbitration shall be borne as decided by the Arbitrator upon him entering the reference.
    Subject to the Arbitration Clause as above, the Courts at Bangalore alone shall have exclusive jurisdiction over any matter arising out of or in connection with this Contract.

    Notwithstanding the existence or any dispute or differences and/or reference for the arbitration, the parties shall proceed with and continue without hindrance the performance of its obligations under this Contract with due diligence and efficiency in a professional manner except where the Contract has been terminated by either Party in terms of this Contract.

    Arbitration Clause in case of Contract with a Public Sector Enterprise (PSE) or a Government Department:

    In the event of any dispute or difference relating to the interpretation and application of the provisions of the Contract, such dispute or difference shall be referred by either party for Arbitration to the Sole Arbitrator in the Department of Public Enterprises to be nominated by the Secretary to the Government of India in-charge of the Department of Public Enterprises. The Arbitration and Conciliation Act, 1996 shall not be applicable to arbitration under this clause. The award of the Arbitrator shall be binding upon the parties to the dispute, provided, however, any Party aggrieved by such Award may make further reference for setting aside or revision of the Award to the Law Secretary, Department of Legal Affairs, Ministry of Law and Justice, Government of India. Upon such reference the dispute shall be decided by the Law Secretary or the Special Secretary or Additional Secretary when so authorized by the Law Secretary, whose decision shall bind the Parties hereto finally and conclusively. The Parties to the dispute will share equally the cost of arbitration as intimated by the Arbitrator.'

32. Applicable Laws and Jurisdiction of Courts: Prevailing Indian laws both substantive and procedural, including modifications thereto, shall govern the Contract. Subject to the conditions as aforesaid, the competent courts in Bangalore alone shall have jurisdiction to consider over any matters touching upon this contract.

33. General Terms: That any non-exercise, forbearance or omission of any of the powers conferred on BHEL and /or any of its authorities will not in any manner constitute waiver of the conditions hereto contained in these presents.
    That the headings used in this agreement are for convenience of reference only.
    That all notices etc., to be given under the Purchase order shall be in writing, type script or printed and if sent by registered post or by courier service to the address given in this document shall be deemed to have been served on the date when in the ordinary course, they would have been delivered to the addressee.

A4-10		REF.: CE / 416 /RC-2024-25/LIE/LIR/ PS
		REV. NO.: 00
		PAGE: 01 0F 02

COPYRIGHT AND CONFIDENTIAL
THE INFORMATION ON THIS DOCUMENT IS THE PROPERTY OF BHARAT HEAVY ELECTRICALS LIMITED . IT MUST NOT BE USED DIRECTLY OR INDIRECTLY IN ANY WAY DETRIMENTAL TO THE INTEREST OF THE COMPANY.

PROJECT: RATE CONTRACT FOR LIE/LIR 2024-2025

CUSTOMER: M/s NTPC AND NON-NTPC (M/s TSGENCO, ADANI)

PUCHASE SPECIFICATION
FOR
LOCAL INSTRUMENTS ENCLOSURES AND LOCAL INSTRUMENT RACKS (LIE/LIR)

REVISION : 00	APPROVED BY DIPTENDU GHOSH		
	PREPARED BY RAJESH LINGUTLA	ISSUED 416	DATE 9-Jul-24

COPYRIGHT AND CONFIDENTIAL
THE INFORMATION ON THIS DOCUMENT IS THE PROPERTY OF BHARAT HEAVY ELECTRICALS LIMITED . IT MUST NOT BE USED DIRECTLY OR INDIRECTLY IN ANY WAY DETRIMENTAL TO THE INTEREST OF THE COMPANY.

CONTENTS

SECTION	DESCRIPTION	REFERENCE NO.	NO OF SHEETS
A	GENERAL INSTRUCTIONS TO BIDDERS	CE/416/LIE/LIR/GI	3
B	PRE-QUALIFICATION REQUIREMENTS	CE/416/LIE/LIR/PQR	2
C	TECHNICAL SPECIFICATION FOR LIE/LIR NTPC PROJECTS	CE/416/NTPC/RC/LIE/LIR /TS	61
D	TECHNICAL SPECIFICATION FOR LIE/LIR	CE/416/NON-NTPC/RC/LIE/LIR /TS	65

GENERAL INSTRUCTIONS TO BIDDERS

COPYRIGHT AND CONFIDENTIAL

THE INFORMATION ON THIS DOCUMENT IS THE PROPERTY OF BHARAT HEAVY ELECTRICALS LIMITED . IT MUST NOT BE USED DIRECTLY OR INDIRECTLY IN ANY WAY DETRIMENTAL TO THE INTEREST OF THE COMPANY.

SECTION- A

GENERAL INSTRUCTIONS TO BIDDERS:

1.0 All required documents against this Tender/Specification shall be submitted in English only.

2.0 Introduction: Bidders are required to offer Local Instrument Enclosure and Local Instrument Rack (LIE/LIR) for a Coal Fired Thermal Power Plant Applications.

3.0 In order to accept the Technical offers / proposals from Bidders for the project mentioned in this Specification (refer Section C), certain Pre-qualification criteria are required to be met by Bidder.

4.0 Pre-qualification requirements are clearly mentioned in Section-B of this Specification. Bidder to read the same carefully and submit the details required for BHEL's acceptance.

5.0 Submit duly-filled Supplier Registration Form (SRF), which shall be downloaded by Bidder from our website "www.bhel.com.This is required for registration of new vendors at BHEL EDN against item Local Instrument Enclosure (LIE) & Local Instrument Rack (LIR). Those Vendors who are already approved by BHEL EDN against item Local instrument Enclosure (LIE) & Local instrument Rack (LIR) are not required to submit the Supplier Registration Form (SRF).

6.0 BHEL May visit vendor's work for verification of facilities offered and BHEL decision on suitability of manufacturing facility is final and binding.

7.0 In case Bidder does not include the details or meet the requirements of Pre-qualification requirements, their offer will be summarily rejected and Bidder's Technical offers will not be evaluated.

Evaluation methodology:

Evaluation methodology as below
BHEL shall initially open Bidder's PQR documents as per Section-B of this specification for review & acceptance.
If the Bidders who are meeting PQR requirements as per Section-B of this specification, Technical Offers of those bidders only will be considered for evaluation.
If the Bidders who are meeting technical requirements as per Section C of this specification, Commercial bids of those bidders will be considered for further evaluation by BHEL.

8.0 Bidders are required to submit offers as detailed below :

aa. Documents pertaining to Pre-Qualification requirement (Section B of this Specification) shall be in a Separate cover /Soft Folder with reference no. "CE/416/LIE-LIR/PQR / Section B" marked on it.

bb. Technical offers/proposals for the Project, whose requirements are mentioned in Sections C will be submitted in a separate cover/Soft Folder with RFQ Reference & Reference marked on it.

Note 1: -Whenever required during evaluation of PQR and Technical offers/bids, vendor is required to be present at BHEL Electronic Division, Bangalore, for discussions. Further in the event of order, during approval of the vendor documents by End users/Customers, if needed vendor shall accompany BHEL representative for discussions.

Note 2: - Changes in Technical Specifications will be discussed with the bidders who Qualified PQR for this tender.

Note 3: - BHEL shall submit vendor credentials to customer and await customer's decision for a maximum of one month from the date of PQ bid opening. If approval is not received within above period, BHEL shall treat the offer as "NOT Meeting PQ" criteria and offer shall be rejected.

PRE-QUALIFICATIONS REQUIREMENTS

COPYRIGHT AND CONFIDENTIAL

THE INFORMATION ON THIS DOCUMENT IS THE PROPERTY OF BHARAT HEAVY ELECTRICALS LIMITED . IT MUST NOT BE USED DIRECTLY OR INDIRECTLY IN ANY WAY DETRIMENTAL TO THE INTEREST OF THE COMPANY.

APPROVED BY		
DIPTENDU GHOSH		
PREPARED BY	ISSUED	DATE
RAJESH LINGUTLA	416	9-Jul-24

SECTION- B

Pre-Qualification Requirements (PQR) of Bidders for Local Instrument Rack (LIR), as a part of Offer:

1.0 Submit Reference List of Projects, Unpriced Purchase Order Copies, wherein LIE, LIR has been supplied.

2.0 The bidder should have executed/ completed work of Design and supply of complete LIE LIR package at least 2 units of 500MW or above rating Thermal power plant. Bidder should have executed Complete LIE/LIR Package to accommodate minimum of 60 Pressure transmitters / switches. Unpriced PO Copy and Customer approved data sheet or Dispatch documents or inspection report etc shall be provided.

3.0 Bidders shall have experienced welders for welding of materials specified in the Technical specification. Welder's certificate shall be provided for verification.

4.0 Bidders shall have a designated drawing office with AUTOCAD/other drafting software, Submission of drawings shall be in pdf format. Bidders to give compliance to the same.

5.0 Bidders shall have designated machine shop including sheet metal fabrication upto 4mm thick and cutting up to 10 mm thick plates, should have Painting facility for both epoxy based tank process painting and powder coating facility or if outsourced details to be provided.

6.0 Bidder shall have facility for performing hydro test on all individual lines (Hydro test pressure shall be 530Kg/Cm2). Bidders to give compliance to the same.

7.0 Vendor shall have requisite space for physical inspection, loading facility etc for offering minimum of about 80 LIRs at the same time for inspection. Bidders to give compliance to the same.

Important Note: In case Bidder does not submit details mentioned in above Section (B) offers will be summarily rejected and Bidder's Technical offers/proposals will not be evaluated. Please read carefully the GENERAL INSTRUCTIONS in Section A of this specifications.

COPY RIGHT AND CONFIDENTIAL

THE INFORMATION ON THIS DOCUMENT IS THE PROPERTY OF BHARAT HEAVY ELECTRICALS LIMITED. IT MUST NOT BE USED DIRECTLY OR INDIRECTLY IN ANY WAY DETRIMENTAL TO THE INTEREST OF THE COMPANY.

PROJECT: RATE CONTRACT FOR LIE/LIR

CUSTOMER: M/s NTPC

CONSULTANT: M/s NTPC

TECHNICAL SPECIFICATION
FOR
LOCAL INSTRUMENT ENCLOSURE / RACKS
(LIE / LIR)

REVISIONS :	APPROVED BY		
	DIPTENDU GHOSH		
	PREPARED BY	ISSUED	DATE
	RAJESH LINGUTLA	416	09/07/24

COPY RIGHT AND CONFIDENTIAL

THE INFORMATION ON THIS DOCUMENT IS THE PROPERTY OF BHARAT HEAVY ELECTRICALS LIMITED . IT MUST NOT BE USED DIRECTLY OR INDIRECTLY IN ANY WAY DETRIMENTAL TO THE INTEREST OF THE COMPANY.

CONTENTS

SL NO	DESCRIPTION	REFERENCE NO
01	SCOPE OF SUPPLY	CE/416/ NTPC/RC/LIE-LIR/SOS REV. 00 ,SHEETS 05
02	TECHNICAL REQUIREMENTS	CE/416/ LIELIR/TR REV. 00, SHEETS 09
03	HOOKUP SCHEMES	CE/416/ NTPC/RC/HUP REV. 00 ,SHEETS 33
04	DRAWINGS FOR LIE-LIR	CE/416/LIE/LIR/OGA1 SHEETS 04
05	VENDOR LIST FOR COMPONENTS	CE/416/ NTPC/RC/LIE-LIR /VL REV. 00 , SHEETS 03
06	TYPICAL QUALITY CHECK LIST	CE/416/LIE-LIR/QP REV 00, SHEETS 06

PROJECT: RATE CONTRACT FOR LIE/LIR

CUSTOMER: M/s NTPC

CONSULTANT: M/s NTPC

COPY RIGHT AND CONFIDENTIAL

THE INFORMATION ON THIS DOCUMENT IS THE PROPERTY OF BHARAT HEAVY ELECTRICALS LIMITED. IT MUST NOT BE USED DIRECTLY OR INDIRECTLY IN ANY WAY DETRIMENTAL TO THE INTEREST OF THE COMPANY.

SCOPE OF SUPPLY
FOR
LOCAL INSTRUMENT ENCLOSURE / RACKS
(LIE / LIR)

REVISIONS :	APPROVED BY		
	DIPTENDU GHOSH		
	PREPARED BY	ISSUED	DATE
	RAJESH LINGUTLA	416	09/07/24

COPY RIGHT AND CONFIDENTIAL

THE INFORMATION ON THIS DOCUMENT IS THE PROPERTY OF BHARAT HEAVY ELECTRICALS LIMITED . IT MUST NOT BE USED DIRECTLY OR INDIRECTLY IN ANY WAY DETRIMENTAL TO THE INTEREST OF THE COMPANY.

Scope of supply

The Scope of supply is as per Technical requirements attached with this specification. Vendor shall quote for each line item of the Table A . The unit rate shall be valid until the completion of the contracts. For this purpose, vendors shall maintain MS Excel file indicating total Bill of materials Table A.

TABLE: A

S.NO	HUP Ref CE/416/NTPC/RC /HUP	MATERIAL CODE	DESCRIPTION	TOTAL QUANTITY	UNIT
1		PR0830000020	LIE TYPEA	106	NO
2		PR0830000038	LIE TYPE B	174	NO
3		PR0830000046	LIE TYPE C	138	NO
4		PR0830000054	LIR TYPE A	34	NO
5		PR0830000062	LIR TYPE B	94	NO
6		PR0830000070	LIR TYPE C	124	NO
7	2	PR0830000313	HOOK UP SCHEME PT/PS 1/2" P91 9000CL	24	NO
8	4	PR0830000321	HOOK UP SCHEME DPT/DPS 1/2" P91 9000CL	12	NO
9	6	PR0820000523	HUP SCH PT/PS 1/2" A182F316H 6000CL	50	NO
10	8	PR0820000501	HUP SCH DPT/DPS 1/2" A182F316H 6000CL	20	NO
11	10	PR0830000402	HOOK UP SCHEME PT/PS 1/2" P22 6000CL	30	NO
12	12	PR0830000356	HOOK UP SCHEME DPT/DPS 1/2" P22 6000CL	20	NO
13	14	PR0830000100	Hook up PT/PS 6000 Steam and Water	40	NO
14	16	PR0830000119	HOOK UP DPT/FT/LT STEAM AND WATER A106 6K	60	NO
15	18	PR0830000127	Hook up PT/PS 3000 water	909	NO
16	20	PR0830000135	Hook up DPT/DPS 3000 water	600	NO
17	22	PR0830000305	Hook up PT/PS 3000 Sea Water 1/2" SS 316L	16	NO
18	24	PR0830000216	Hook up DPT/DPS Sea water SS316 L	14	NO
19	26	PR0830000151	Hook up PT/PS Clean air Top entry 3/4"	8	NO
20	28	PR0830000143	Hook up PT/PS Clean Air service	1078	NO
21	30	PR0830000194	Hook up DPT/FT/DPS Flue gas	518	NO
22	32	PR0830000003	Hook up for Air Purging	1156	NO
23	32	PR0830000259	Hook up for Continuous Purging	1930	NO
24	32	PR0830000267	Hook up for Intermittent Purging	1156	NO
25		PR0450000290	Temp. Transmitter Junction Box - Type A	59	NO
26		PR0450000303	Temp. Transmitter Junction Box - Type B	273	NO
27		PR0450000311	Temp. Transmitter Junction Box - Type C	301	NO

Note:

1. **Colour:, INTERNAL- Glossy White Two coats /RAl 7035 with fire resistant Paint, EXTERNAL-RAL 7032/RAL 7035 (FINAL COLOUR WILL BE DECIDED DURING DETAILED ENGG)**
2. **IP55 Type test to be submitted for LIE and IP-65 for JB of LIR for approval. Report should not be older than March 2021.**
3. **Please refer/correlate scope of supply w.r.t Technical specifications, Hook Up schemes and Drawings etc.**
4. **Tentative NTPC Project list enclosed here as Table: B.**
5. **Instrument schedule (Grouping document) will be provided during detailed engineering.**

Table: B

List of Tentative NTPC Projects as below

S.No	NTPC Project	Tentative Delivery Dates
1	NTPC Talcher 2 X 660MW STPP	30.09.2025
2	NTPC Korba Stage I (3 X 200MW) and Stage-II (3 X 500MW) & Stage-III (1 X 500MW)TPS	30.12.2024
3	NTPC Kahalgoan Stage I (4 X 200MW) and Stage-II (3 X 500MW)	30.12.2024
4	NPGCL Nabinagar 3 X 660MW STPP FGD Packag	Unit# 1- 30.12.2024, Unit# 2- 30.06.2025, Unit#3-30.10.2025.
5	BRBCL Nabhinagar 4 X 250MW TPS FGD Package	Unit# 1- 30.12.2024, Unit# 2- 30.06.2025, Unit#3-30.10.2025, Unit#3-30.12. 2025..
6	NTPC Barh Stage II 2 X 660M W STPP FGD Package	Unit# 1- 30.03.20.25, Unit# 2- 30.10.2025.
7	PVUNL Patratu 3 X 800MW STPP FGD Package	Unit#1- 30.12.2024, Unit# 2- 30.03.20.25, Unit# 3- 30.10.2025.
8	NTPC Sipat 2 X 500MW TPS STAGE II FGD Package	30.12.2024

Project wise break up quantity enclosed as Annexure-I.

COPY RIGHT AND CONFIDENTIAL
THE INFORMATION ON THIS DOCUMENT IS THE PROPERTY OF BHARAT HEAVY ELECTRICALS LIMITED . IT MUST NOT BE USED DIRECTLY OR INDIRECTLY IN ANY WAY DETRIMENTAL TO THE INTERESTS OF THE COMPANY.

Annexure-I

S.NO	HUP Ref CE/416/NTPC/RC /HUP	Material Code	Description	Quantity for various NTPC Projects								Total Quantity	Unit
				NTPC Talcher 2 X 660MW STPP	NTPC Korba Stage I (3 X 200MW) and Stage-II (3 X 500MW) & Stage-III (1 X 500MW)TPS	NTPC Kahalgoan Stage I (4 X 200MW) and Stage-II (3 X 500MW)	NPGCL Nabinagar 3 X 660MW STPP FGD Packag	BRBCL Nabhinagar 4 X 250MW TPS FGD Package	NTPC Barh Stage II 2 X 660M W STPP FGD Package	PVUNL Patratu 3 X 800MW STPP FGD Package	NTPC Sipat 2 X 500MW TPS STAGE II FGD Package		
1		PR0830000020	LIE TYPEA	40	15	15	9	12	6	9	0	106	NO
2		PR0830000038	LIE TYPE B	84	20	20	12	16	8	12	2	174	NO
3		PR0830000046	LIE TYPE C	24	25	25	15	20	10	15	4	138	NO
4		PR0830000054	LIR TYPE A	12	5	5	3	4	2	3	0	34	NO
5		PR0830000062	LIR TYPE B	28	15	15	9	12	6	9	0	94	NO
6		PR0830000070	LIR TYPE C	80	10	10	6	8	4	6	0	124	NO
7	2	PR0830000313	HOOK UP SCHEME PT/PS 1/2" P91 9000CL	24	0	0	0	0	0	0	0	24	NO
8	4	PR0830000321	HOOK UP SCHEME DPT/DPS 1/2" P91 9000CL	12	0	0	0	0	0	0	0	12	NO
9	6	PR0820000523	HUP SCH PT/PS 1/2" A182F316H 6000CL	50	0	0	0	0	0	0	0	50	NO
10	8	PR0820000501	HUP SCH DPT/DPS 1/2" A182F316H 6000CL	20	0	0	0	0	0	0	0	20	NO
11	10	PR0830000402	HOOK UP SCHEME PT/PS 1/2" P22 6000CL	30	0	0	0	0	0	0	0	30	NO
12	12	PR0830000356	HOOK UP SCHEME DPT/DPS 1/2" P22 6000CL	20	0	0	0	0	0	0	0	20	NO
13	14	PR0830000100	Hook up PT/PS 6000 Steam and Water	40	0	0	0	0	0	0	0	40	NO
14	16	PR0830000119	HOOK UP DPT/FT/LT STEAM AND WATER A106 6K	60	0	0	0	0	0	0	0	60	NO
15	18	PR0830000127	Hook up PT/PS 3000 water	440	80	80	70	80	50	70	39	909	NO
16	20	PR0830000135	Hook up DPT/DPS 3000 water	260	60	60	50	60	40	50	20	600	NO
17	22	PR0830000305	Hook up PT/PS 3000 Sea Water 1/2" SS 316L	16	0	0	0	0	0	0	0	16	NO
18	24	PR0830000216	Hook up DPT/DPS Sea water SS316 L	14	0	0	0	0	0	0	0	14	NO
19	26	PR0830000151	Hook up PT/PS Clean air Top entry 3/4"	8	0	0	0	0	0	0	0	8	NO
20	28	PR0830000143	Hook up PT/PS Clean Air service	130	200	200	120	160	100	120	48	1078	NO
21	30	PR0830000194	Hook up DPT/FT/DPS Flue gas	220	60	60	40	50	40	40	8	518	NO
22	32	PR0830000003	Hook up for Air Purging	110	220	220	150	180	100	150	26	1156	NO
23	32	PR0830000259	Hook up for Continuous Purging	520	280	280	200	240	180	200	30	1930	NO
24	32	PR0830000267	Hook up for Intermittent Purging	110	220	220	150	180	100	150	26	1156	NO
25		PR0450000290	Temp. Transmitter Junction Box - Type A	36	5	5	3	4	2	3	1	59	NO
26		PR0450000303	Temp. Transmitter Junction Box - Type B	40	50	50	30	40	20	30	13	273	NO
27		PR0450000311	Temp. Transmitter Junction Box - Type C	70	50	50	30	40	20	30	11	301	NO

PROJECT: RATE CONTRACT FOR LIE/LIR

CUSTOMER: M/s NTPC

CONSULTANT: M/s NTPC

COPY RIGHT AND CONFIDENTIAL

THE INFORMATION ON THIS DOCUMENT IS THE PROPERTY OF BHARAT HEAVY ELECTRICALS LIMITED. IT MUST NOT BE USED DIRECTLY OR INDIRECTLY IN ANY WAY DETRIMENTAL TO THE INTEREST OF THE COMPANY.

TECHNICAL REQUIREMENT
FOR
LOCAL INSTRUMENT ENCLOSURE / RACKS
(LIE / LIR)

REVISIONS :	APPROVED BY		
	DIPTENDU GHOSH		
	PREPARED BY	ISSUED	DATE
	RAJESH LINGUTLA	416	09/07/24

TECHNICAL REQUIREMENTS FOR TRANSMITTER ENCLOSURES AND TRANSMITTER RACKS:

I. TRANSMITTER ENCLOSURES:

1. The Transmitter enclosures (Closed type) are provided for mounting Transmitters etc. and located in Boiler area. This shall be constructed of **3** mm thick for C&I Package steel sheet material. These shall confirm to IP 55 protection class.

2. The Transmitter Enclosures shall be of following sizes (in millimeters).

   Type A – 1400(W) x 800(D) x 2200(H) (To Mount 5 or more transmitters)
   Type B - 1000(W) x 800(D) x 2200(H) (To Mount 3 to 4 transmitters)
   Type C - 700 (W) x 800(D) x 2200(H) (To Mount 1 to 2 transmitters)

3. These shall be reinforced as required to ensure true surfaces and to provide adequate Support for instruments and other equipment mounted therein. Double interlocking doors shall be provided and shall be arranged for maximum possible access to the module interior. Center posts or any member which would reduce access shall not be provided.

4. The doors shall be the three-point locking type constructed of not less than **3** mm steel sheet. Doors shall have concealed quick removal type pinned hinges and locking handles. Enclosure door locks shall accept the same / common key all over the plant. Gaskets shall be used between all mating sections to achieve dust proof enclosure rating for the modules and waterproof and dust tight rating on the Terminal / Junction boxes. All enclosures shall have access doors on Front and Rear sides.

5. Internal wirings between the Transmitters and Terminal / Junction box shall run through flexible dust tight conduits.

6. Anti Vibration Pads of minimum 15 mm thickness shall be provided for supporting each enclosure.

7. Construction of same shall be typically as per enclosed drawing **CE/416/LIE/LIR/OGA2.**

8. Service Power and Lighting

Each enclosure shall be provided with one receptacle, one light fixture with wire guard and one lighting switch and suitable MCBs. Lighting switches may be doors actuated, mounted door. Light switches and receptacles shall be installed inside the enclosure on the wall near the latch side of the enclosure door. Light fixtures shall be installed on the ceilings of the enclosures. Power supplies for miscellaneous devices shall be provided with fuses located within the Enclosure JB. Fuses shall be mounted in fuse blocks. Fuse ratings will be given on electrical schematic diagrams. Power supply shall be 240 V AC.

9. Equipment Installation

a. Enclosures shall be provided to mount field instrument, equipment and accessories. Vendor shall prepare enclosures and piping drawings indicating the layout for each enclosure. Special attention shall be given in the piping layout to avoid air traps in liquid filled piping, or water pockets in piping intended to be dry.

b. Drawings shall indicate the arrangement of all Piping, Valves and Fittings within the enclosures.

10. **Impulse Piping /Tubing**

a. Transmitter enclosures shall be complete with impulse tubing piping, valves from enclosure bulkhead connection to all instruments and necessary drain / blow down connections. The type, sizes, material and pressure class of pipes/tubes, fittings, valves etc. shall be suitable for the intended applications as per the Schemes / Tagging list of Instrument, provided by BHEL.

b. Bulkhead connection shall be used when instrument piping/ tubing enters the enclosure through Bulkhead plate. Typically through Bulk heads, Impulse pipe entry shall be through Top side of the Enclosure for Steam and Liquid services and for Air / flue gas services, impulse pipe entry shall be from Bottom side.

c. All Instrument Blow down lines, except those measuring vacuum shall be connected to a two-inch header, which is extended through one end of the enclosure and turned downward at other end.

d. Instrument piping and tubing shall be hydrostatically tested at one and one-half times the maximum Design pressure(As per instrument schedule Ref:**CE/416/PATRATU/INS**) for that instrument except for low pressure (below Design Pressure 5.34Kg/Cm2) and vacuum measurement the test pressure will be 8 Kg / Cm2.

11. For Purging :

a. Pneumatic tubing shall be installed for all pneumatic devices, such as Air filter Regulator, Purge rotameters, Isolation valves, distribution air-header etc. Pneumatic tubing shall be installed in a neat workmanlike manner in protected locations with suitable supports. All Pipes / Tubes, which enter or leave the enclosure, shall be terminated on bulkhead fittings in the bulkhead plate. Pneumatic tubing material shall be ½" OD SS316 tubing Flareless SS- Tube fittings shall be used for tubing connections.

b. Instrument tubing schematic, connection and interconnections diagrams shall be furnished.

12. Wiring Within Enclosures and Grounding

Vendor shall furnish general arrangement and wiring diagrams for each transmitter Enclosures for approval.

13. **Enclosure Electrical Junction Box**

a. IP 55 junction box for the termination of all internal wiring shall be provided for each transmitter enclosure.

b. Junction boxes for enclosures shall be located inside the Enclosure on one end of each enclosure assembly to accept field wiring through the bottom of the junction box. The Junction box shall be 800 x 200 x200 mm minimum dimension. A hinged door shall give on side access to the interior of the junction box. Same key shall be used to lock both Junction box. Tb shall be in multiple of 12 nos.

II. OPEN TYPE TRANSMITTER RACKS:

1. Transmitter racks is provided for mounting transmitters and other accessories, in buildings and closed areas like the power house building / turbine hall.

2. The Transmitter Racks shall be of following sizes (in millimeters).

   Type A- 1650(W) x 800(D) x 2200(H) (To mount 7 to 8 transmitters)
   Type B- 1330(W) x 800(D) x 2200(H) (To mount 5 to 6 transmitters)
   Type C- 1010(W) x 800(D) x 2200(H) (To Mount 1 to 4 transmitters)

3. Racks shall be constructed on structural members of adequate strength and rigidity to ensure proper support to the mounted instruments and equipment. Racks shall be of welded construction. Each rack shall be provided with a canopy thickness not less than **3mm** to protect the instrument from dripping water or falling objects.

4. All Valves & Manifolds shall be securely mounted and the structural design shall be such that no item shall interfere with maintenance and removal of instrument, equipment and their accessories.

5. Construction of same shall be typically as per enclosed drawing **CE/416/LIE/LIR/OGA2**

6. Service Power and Lighting

a. Each rack shall be provided with one receptacle, one light fixture with wire guard and one lighting switch. Light fixtures shall be installed on the canopy of the rack.

b. Power supplies for miscellaneous devices shall be provided with fuses located within the rack JB. Fuses shall be mounted in fuse blocks. Fuse ratings will be given on electrical schematic diagrams. Power supply shall be 240 V AC.

7. Equipment Installation

Vendor shall prepare rack fabrication and piping drawings indicating the layout of each Rack. Transmitter/Instruments shall be installed using custom fabricated supports which are attached to the vertical members provided for this purpose. Drawings shall indicate the arrangement of all equipment, piping, valves and fittings within the rack and shall be subject to approval.

8. Impulse Piping / Tubing

a. Transmitter racks shall be complete with impulse tubing piping, valves from enclosure bulkhead connection to all instruments and necessary drain / blow down connections. The type, sizes, material and pressure class of pipes/tubes, fittings, valves etc. shall be suitable for the intended applications as per the Schemes / Tagging list of Instrument, provided by BHEL.
b. Bulkhead connection shall be used when instrument piping/ tubing enters the enclosure through Bulkhead plate. Typically through Bulk heads, Impulse pipe entry shall be through top side of the Enclosure for Steam and Liquid services.

c. All Instrument Blow down lines, except those measuring vacuum shall be connected to a two-inch header, which is extended through one end of the enclosure and turned downward for directing the blow down into drain.

d. Instrument piping and tubing shall be hydrostatically tested at one and one-half times the maximum Design Pressure(As per Instrument schedule ref:**CE/416/ NTPC /INS**) for that instrument except for low pressure(Design Pressure below 5.34Kg/Cm2) and vacuum measurement the test pressure will be 8 Kg / Cm2.

9. Wiring of the Racks

a. A fully enclosed IP 65 type junction box shall be provided in each rack for housing the terminal blocks, power supply fuses and other electrical accessories, as required.

b. All electrical connections between instrument and the Terminals in Junction box shall be made. In addition all utility wiring for lighting and service power shall be installed.

c. Vendor shall furnish general arrangement and wiring diagrams for each transmitter rack for approval.

d. Junction boxes for the racks shall be mounted on one end of each assembly & should be inside the Rack to accept field wiring through the bottom of the junction box. The junction box shall be Minimum depth 200 mm. A removable bolted door shall give access to the interior of the junction box. All junction boxes shall accept same key. JB to be of FRP with 4mm thick and IP 65 protection class. Door handle shall be of SS. Self locking type with common key. Door gasket shall be of synthetic rubber. M6 earthing stud shall be provided. TB shall be in multiple of 12 nos. Please note that Metal JB or FRP JB will be decided during detailed engineering without price any implications.

III. General Requirement applicable to Transmitter Enclosures & Racks :

1. Surface preparation And Painting

a. All sheet metal / exterior steel surfaces shall rust free and scale free and all other residue during fabrication operation such as Oil, grease and salts etc. shall be removed by one or more solvent cleaning methods. Epoxy primer surface shall be applied to all exterior and interior surfaces. Epoxy paint shall be applied to all surfaces and the paint thickness shall be 100 to150 microns. The finish colours for exterior and interior surfaces shall conform to the shades mentioned in scope of supply.

1. Grounding

a. Enclosures and Racks shall be provided with a continuous tinned copper ground bus of minimum 25 mm X 6 mm cross section, extended along the entire length. The ground bus shall have two (2) bolts drilling with GI bolts and nuts at each end.

2. Name plate / Label.

a. Service details and Tag no. shall be engraved on a nameplate or label for each of the Transmitter. These Nameplates or Labels shall be of white non-hygroscopic material with engraved black lettering. This shall be fixed on to the Impulse Pipe closer to the Transimitter inside the Enclosure / Rack.

3. Wiring Details

a. Interconnecting wiring shall be provided between all electrical devices mounted in the panels and between the devices and terminal blocks if the devices are to be connected to equipment outside the panels by cabling. All interior wiring shall be installed neatly and carefully and shall be terminated at suitable terminal blocks in the Junction box. Sufficient clearance shall be provided for all control and instrumentation leads.

b. Each wire shall be identified at both ends with wire designations as per approved wiring diagram. Interlocking type ferrules shall be used for identification.

c. All wire termination shall be made with insulated sleeve and cage clamp type terminals.

d. All signal wiring shall be done with 2 pair, 0.5 sq. mm annealed tinned copper, pair twisted overall & shielded , voltage grade 225 V , unarmored FRLS PVC sheathed cable and 4 pair, 0.5 sq. mm for PS/DPS. Power wiring shall be with 1.5 sq mm, 1100V.

e. Wires shall be dressed and run in trays or troughs with clamp-on type covers. Wiring may be neatly bunched in-groups by non-metallic cleats or bands. Shield wires shall be terminated on separate terminal blocks.

f. Internal wiring shall follow distinct color coding to segregate different voltage levels viz. 24V DC & 230V AC

g. Junction Box of enclosures will be provided with removable, gasketted cable gland for cable entrance.

4. Fuse Blocks

a. Fuse blocks shall be modular type with bakelite frame and reinforced retaining clips.

5. Terminal Blocks

a. Terminal blocks shall be DIN rail mounted and shall have Cage clamp type connection which shall be maintained for all panels uniformly.

b. The rated cross section of the terminal blocks shall be suitable for connecting 0.5-mm²/2.5 mm². Conductor of suitable voltage grade as specified.

c. Terminal blocks shall be mounted vertically with adequate spacing between rows for routing the cable troughs and to allow adequate free workspace for termination and removal of wires.

d. Terminal blocks shall be provided with white marking strips/self adhesive marker cards.

e. For all instruments one set of spare terminals to be provided below the main terminals.

f. Terminal blocks for termination of electrical power supply shall be type WAGO / PHOENIX make of suitable size with marking strips.

g. The last terminal in a rail-mounted assembly shall be closed with an end plate and end bracket.

h. Terminal blocks shall be provided with multiples of 12 for each Enclosure/Rack.

IV. Documents to be Submitted by Vendor for Approval :

1. OGA for Transmitter Enclosure and Racks.

2. Layout of Components in each of Transmitter Enclosure and Rack.

3. Electrical diagrams for each Transmitter Enclosure and Rack.

4. Component datasheets

5. Quality plan including Welding Procedure specification and Welder Procedure qualification Record. This will be approved by BHEL / (END USER)

6. The quality plan shall include Visual inspection, GA BOM/Layout features verification, Dimensions, Paint shade, thickness measurement, Alignment of sections, component ratings, Wiring, IR, HV, review of TC for instruments / Devices, Accessibility of TBs / Devices, Illumination, Tubing and Degree of protection (Review of type test certificate)

V. Specific requirements

1. Where grouping is not provided for instruments, same shall be indicated during detailed engineering.
2. **SS tubing between valve manifold and transmitter for each service shall be done as per Transmitter Model Nos with mounting details will be provided by BHEL EDN.In Case If Transmitter Model Nos with mounting details are not received before dispatch, Vendor has to supply tube and tube connectors during commissioning time as per BHEL EDN Instruction.**
3. **Packing should be Wooden packing is must for all the LIE/LIR/TTE consignment. Delicate items to be bubble wrapped with sufficient care.**

TECHNICAL REQUIREMENTS FOR TEMPERATURE TRANSMITTER ENCLOSURE/JUNCTION BOX:

1. The Junction Box is provided for mounting Pipe Mounted Temperature Transmitters. This shall be constructed of 1.6 mm thick steel sheet material. These shall confirm to IP 55 protection class.

2. The Junction Box/Enclosure shall be of following sizes (in millimeters).

   Type A – 800(W) x 500(D) x 1100(H) (Shall have Four rows of 2" pipe & 180 terminals)
   Type B - 800(W) x 500(D) x 900(H) (Shall have Three rows of 2" pipe & 150 terminals)
   Type C - 800(W) x 500(D) x 600(H) (Shall have Two rows of 2" pipe & 60 terminals)

3. These shall be reinforced as required to ensure true surfaces and to provide adequate support for instruments and other equipment mounted therein. Doors shall be provided and shall be arranged for maximum possible access to from front and back side of enclosures (as applicable) the module interior. Center posts or any member which would reduce access shall not be provided.

4. The doors shall be the three-point locking type constructed of not less than 1.6 mm steel sheet. Doors shall have concealed quick removal type pinned hinges and locking handles. Junction Box door locks shall accept the same / common key all over the plant. Gaskets shall be used between all mating sections to achieve dust proof enclosure rating. All Junction Box shall have access doors on Front side and back side.

5. All the junction boxes shall be suitable for mounting on walls, columns, structures, free standing type etc. The brackets, nuts, bolts, screws, gland and lugs required for erection are in supplier's scope.

6. Vendor shall furnish general arrangement diagrams for each type of transmitter Junction Box for approval.

7. Surface preparation and Painting

   b. All sheet metal / exterior steel surfaces shall rust free and scale free and all other residue during fabrication operation such as Oil, grease and salts etc. shall be removed by one or more solvent cleaning methods. Epoxy primer surface shall be applied to all exterior and interior surfaces. Epoxy paint shall be applied to all surfaces and the paint thickness shall be 100 to150 microns. The finish colours for exterior and interior surfaces shall conform to the shades mentioned in scope of supply.

8. **Terminal Blocks**

   a. Terminal blocks shall be DIN rail mounted and shall have Cage clamp type connection which shall be maintained for all panels uniformly.

b. The rated cross section of the terminal blocks shall be suitable for connecting 0.5-mm^2/2.5 mm^2. Conductor of suitable voltage grade as specified.

c. Terminal blocks shall be mounted vertically with adequate spacing between rows for routing the cable troughs and to allow adequate free workspace for termination and removal of wires.

d. Terminal blocks shall be provided with white marking strips/self adhesive marker cards.

e. Terminal blocks for termination of electrical power supply shall be type WAGO / PHOENIX make of suitable size with marking strips.

f. The last terminal in a rail-mounted assembly shall be closed with an end plate and end bracket.

9. <u>Documents to be Submitted by Vendor for Approval:</u>

a. OGA for Junction Box.

b. Layout of Transmitter in each Type of Junction Box.

c. Quality plan. This will be approved by BHEL / (END USER)

d. The quality plan shall include Visual inspection, GA BOM/Layout features verification, Dimensions, Paint shade, thickness measurement, IR, HV, Accessibility of TBs / Devices, Degree of protection (Review of type test certificate)

PROJECT: RATE CONTRACT FOR LIE/LIR

CUSTOMER: M/s NTPC

CONSULTANT: M/s NTPC

HOOK UP SCHEMES

COPY RIGHT AND CONFIDENTIAL

THE INFORMATION ON THIS DOCUMENT IS THE PROPERTY OF BHARAT HEAVY ELECTRICALS LIMITED. IT MUST NOT BE USED DIRECTLY OR INDIRECTLY IN ANY WAY DETRIMENTAL TO THE INTEREST OF THE COMPANY.

REVISIONS :	APPROVED BY		
	DIPTENDU GHOSH		
	PREPARED BY	ISSUED	DATE
	RAJESH LINGUTLA	416	09/07/24

REVISION NO	DATE	COPY RIGHT AND CONFIDENTIAL The information on this document is the property of Bharat Heavy Electricals Limited. It must not be used directly or indirectly in anyway detrimental to the interest to the Company.

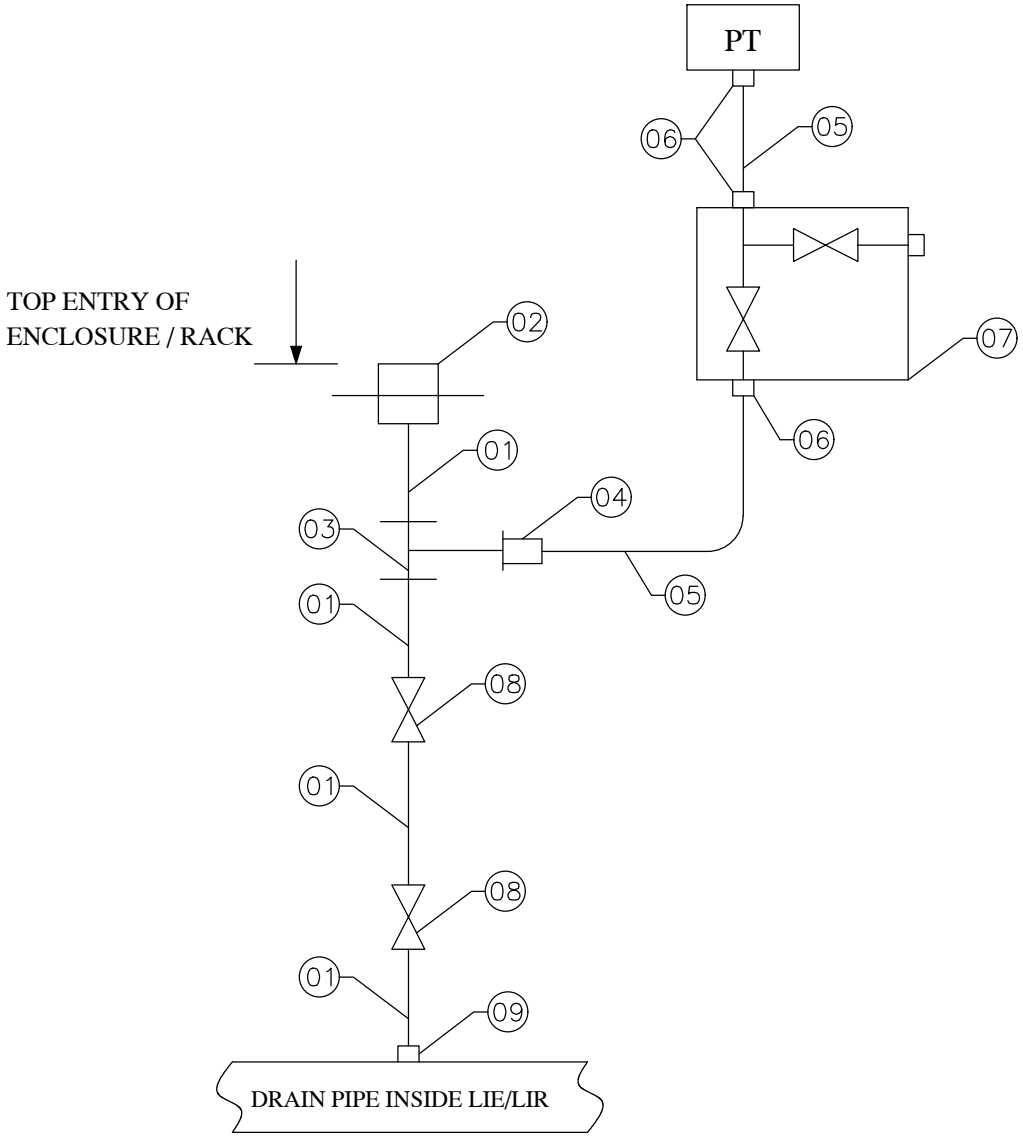

NOTES:

1. " TRANSMITTER BELOW SOURCE"
2. FOR BILL OF MATERIAL REFER PAGE 03 OF 33

A4 - 11

CE/416/NTPC/RC/HUP

REV. NO: 00

PAGE: 02 OF 33

ITEM NO.	ITEM DESCRIPTION	QTY/INST.
01	IMPULSE PIPE MATL: ASTM A335 P91 SIZE: 1/2" NB-SCH XXS	A/R
02	BULKHEAD UNION / COUPLING / AS PER ANSI B16.11 MATL: ASTM A182 F91 SIZE: 1/2" NB-SW / CL 9000	01
03	FORGED EQUAL TEE / AS PER ANSI B16.11 MATL: ASTM A182 F91 SIZE: 1/2" NB-SW / CL 9000	01
04	TEE-TUBE UNION MATL: SS316 SIZE: OD OF 1/2" NB-PIPE x TO SUIT 1/2" OD SS TUBE	01
05	TUBE MATL: A213 TP316H SIZE: 1/2" OD x 2.1mm THK.	A/R
06	TUBE FITTING: DFDC MATL: SS316 SIZE: 1/2" NPTM x TO SUIT 1/2" OD SS TUBE	03
07	TWO VALVE MANIFOLD WITH VENT PLUG BODY: SS316 PORT SIZE: 1/2" NPTF / RATING: 9000 PSI	01
08	FORGED GLOBE VALVE BODY: ASTM A182 F91 / STEM MATL: A182 Gr F6a SIZE: 1/2" NB-SW / CL 3000 SPL	02
09	HALF COUPLING / AS PER ANSI B16.11 MATL: ASTM A182 F91 SIZE: 1/2" NB-SW / CL 9000	01

COPY RIGHT AND CONFIDENTIAL
The information on this document is the property of Bharat Heavy Electricals Limited.
It must not be used directly or indirectly in anyway detrimental to the interest to the Company.

DATE

REVISION NO

REVISION NO	DATE	COPY RIGHT AND CONFIDENTIAL The information on this document is the property of Bharat Heavy Electricals Limited. It must not be used directly or indirectly in anyway detrimental to the interest to the Company.		

A4 - 11

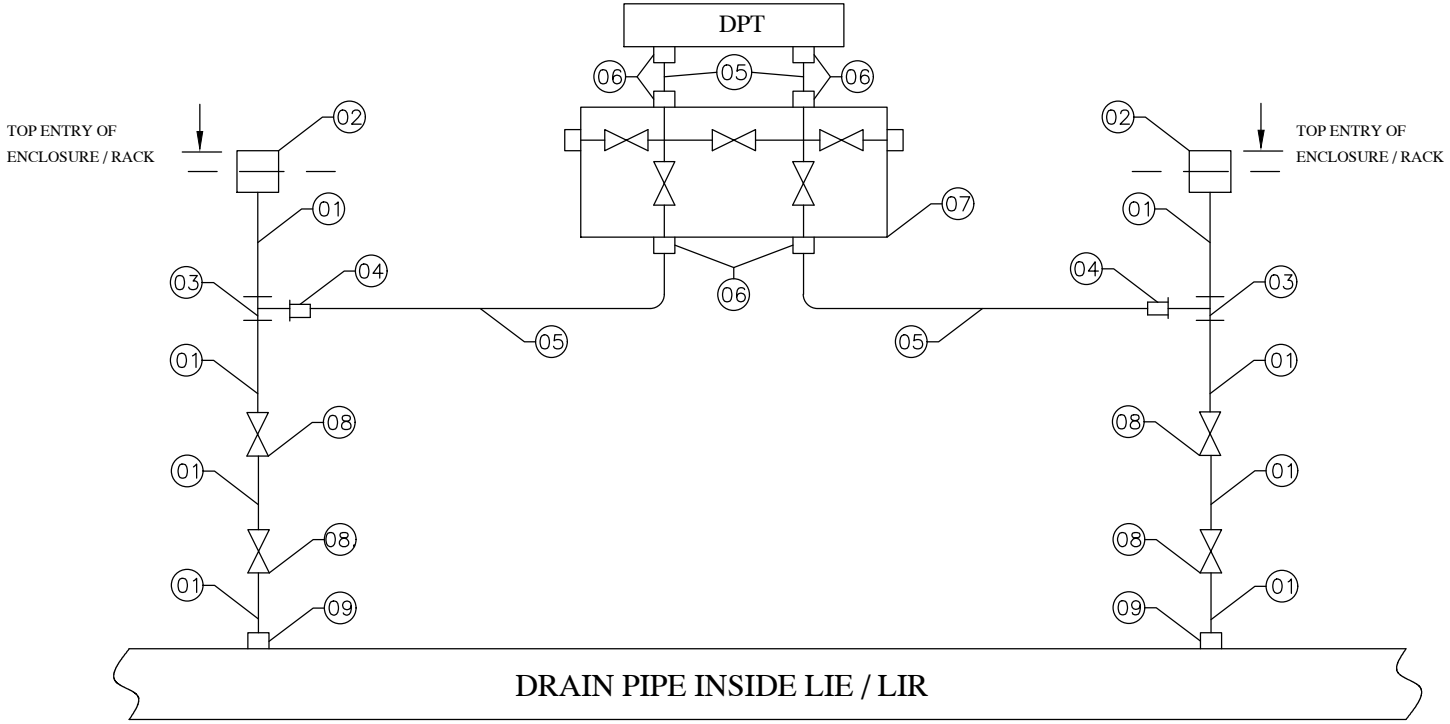

NOTE:

1. " TRANSMITTER BELOW SOURCE"
2. FOR BILL OF MATERIAL REFER PAGE 05 OF 33

CE/416/NTPC/RC/HUP

REV. NO: 00

PAGE: 04 OF 33

ITEM NO.	ITEM DESCRIPTION	QTY/INST.
01	IMPULSE PIPE MATL: ASTM A335 P91 SIZE: 1/2" NB-SCH XXS	A/R
02	BULKHEAD UNION / COUPLING / AS PER ANSI B16.11 MATL: ASTM A182 F91 SIZE: 1/2" NB-SW / CL 9000	02
03	FORGED EQUAL TEE / AS PER ANSI B16.11 MATL: ASTM A182 F91 SIZE: 1/2" NB-SW / CL 9000	02
04	TEE-TUBE UNION MATL: SS316 SIZE: OD OF 1/2" NB-PIPE x TO SUIT 1/2" OD SS TUBE	02
05	TUBE MATL: A213 TP316H SIZE: 1/2" OD x 2.1mm THK.	A/R
06	TUBE FITTING: DFDC MATL: SS316 SIZE: 1/2" NPTM x TO SUIT 1/2" OD SS TUBE	06
07	FIVE VALVE MANIFOLD WITH VENT PLUG BODY: SS316 PORT SIZE: 1/2" NPTF / RATING: 9000 PSI	01
08	FORGED GLOBE VALVE BODY: ASTM A182 F91 / STEM MATL: A182 Gr F6a SIZE: 1/2" NB-SW / CL 3000 SPL	04
09	HALF COUPLING / AS PER ANSI B16.11 MATL: ASTM A182 F91 SIZE: 1/2" NB-SW / CL 9000	02

COPY RIGHT AND CONFIDENTIAL
The information on this document is the property of Bharat Heavy Electricals Limited.
It must not be used directly or indirectly in anyway detrimental to the interest to the Company.

DATE

REVISION NO

REVISION NO	DATE

COPY RIGHT AND CONFIDENTIAL

The information on this document is the property of Bharat Heavy Electricals Limited.
It must not be used directly or indirectly in anyway detrimental to the interest to the Company.

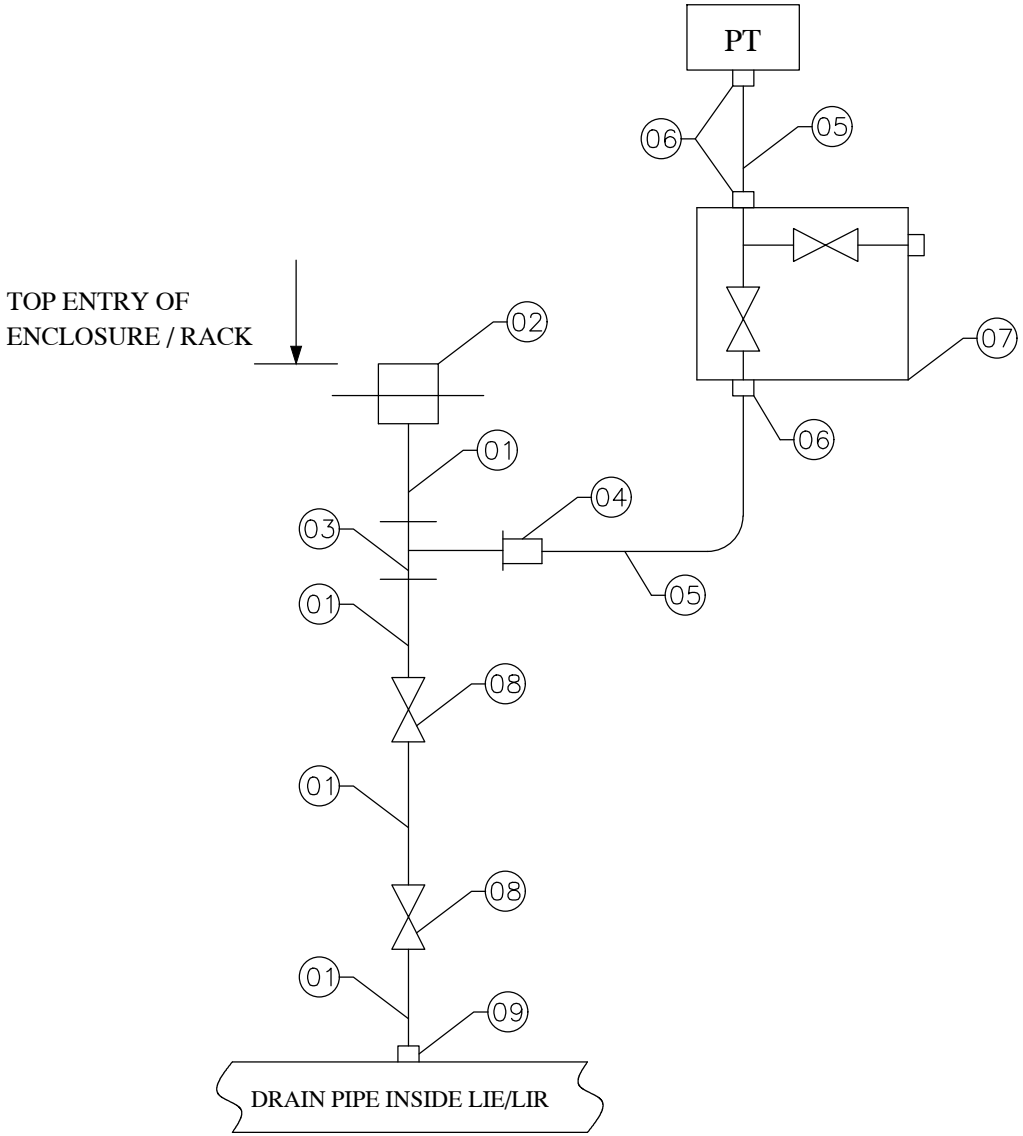

NOTES:

01. "TRANSMITTER BELOW SOURCE"
02. FOR BILL OF MATERIAL REFER PAGE 07 OF 33

CE/416/NTPC/RC/HUP

REV. NO: 00

ITEM NO.	ITEM DESCRIPTION	QTY / INST. (Nos.)
01	SEAMLESS PIPE MATL: ASTM 213 TP316H SIZE: 1/2" NB-SCH 160	A/R
02	BULKHEAD UNION / COUPLING /AS PER ANSI B16.11 MATL: ASTM A182 F316H SIZE: 1/2" NB-SW / CL 6000 LBS	01
03	FORGED EQUAL TEE / AS PER ANSI B16.11 MATL: ASTM A182 F316H SIZE: 1/2" NB-SW / CL 6000	01
04	TEE-TUBE UNION MATL: SS316 SIZE: 1/2" NPTM x TO SUIT 1/2" OD SS TUBE	01
05	SEAMLESS TUBE MATL: A213 TP316H SIZE: 1/2" OD x 2.1mm THK.	A/R
06	TUBE FITTING / DFDC MATL: SS316 SIZE: 1/2" NPTM x TO SUIT 1/2" OD SS TUBE	03
07	TWO VALVE MANIFOLD WITH DRAIN PLUG MATL: SS316 PORT SIZE: 1/2" NPTF / PR. TESTING: 9000PSI	01
08	FORGED GLOBE VALVE BODY: ASTM A182 F316H / STEM MATL: A182 Gr F6a SIZE: 1/2" NB-SW / CL 3000SPL	02
09	HALF COUPLING / AS PER ANSI B16.11 MATL: ASTM A182 F316H SIZE: 1/2" NB-SW / CL 6000	01

COPY RIGHT AND CONFIDENTIAL
The information on this document is the property of Bharat Heavy Electricals Limited.
It must not be used directly or indirectly in anyway detrimental to the interest to the Company.

DATE

REVISION NO

REVISION NO	DATE	COPY RIGHT AND CONFIDENTIAL The information on this document is the property of Bharat Heavy Electricals Limited. It must not be used directly or indirectly in anyway detrimental to the interest to the Company.

A4 - 11

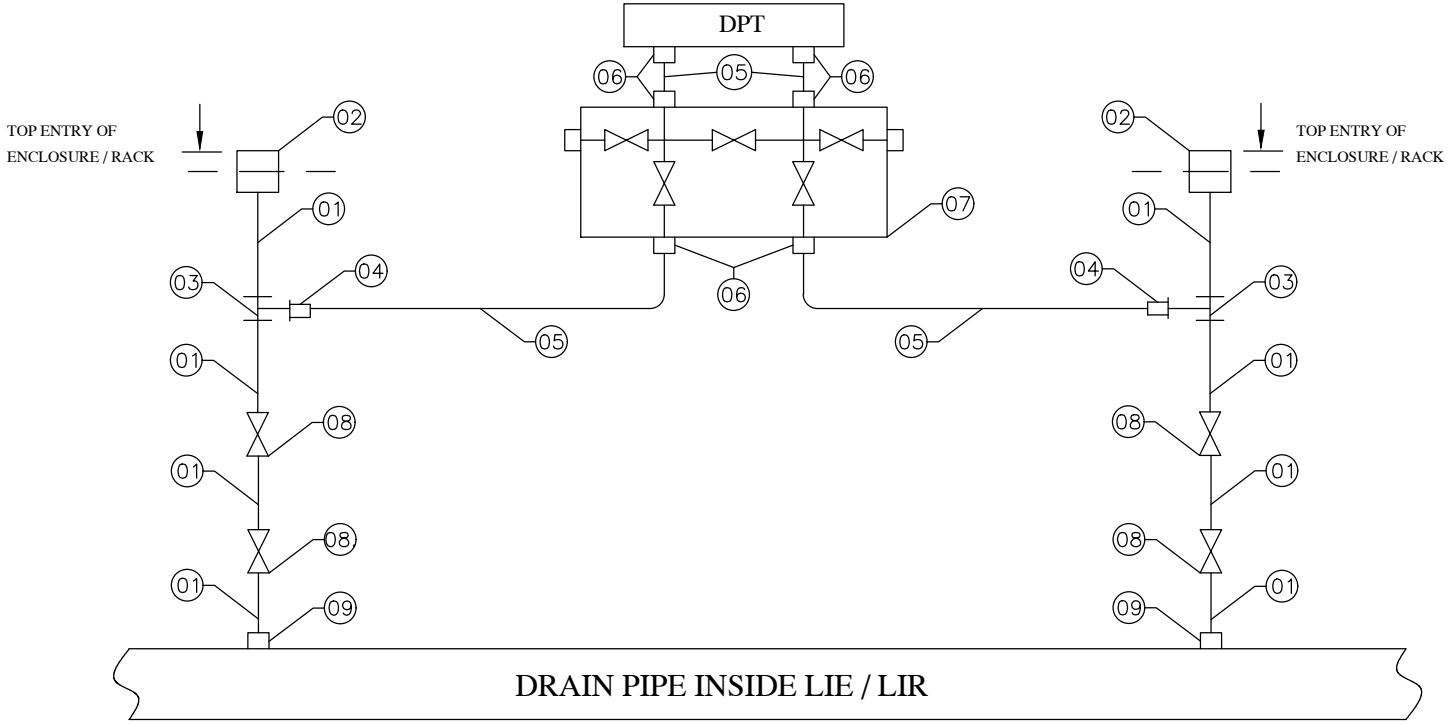

NOTE:

1. " TRANSMITTER BELOW SOURCE"
2. FOR BILL OF MATERIAL REFER PAGE 09 OF 33

CE/416/NTPC/RC/HUP

REV. NO: 00

PAGE: 08 OF 33

ITEM NO.	ITEM DESCRIPTION	QTY / INST. (Nos.)
01	SEAMLESS PIPE MATL: ASTM 213 TP316H SIZE: 1/2" NB-SCH 160	A/R
02	BULKHEAD UNION / COUPLING /AS PER ANSI B16.11 MATL: ASTM A182 F316H SIZE: 1/2" NB-SW / CL 6000 LBS	02
03	FORGED EQUAL TEE / AS PER ANSI B16.11 MATL: ASTM A182 F316H SIZE: 1/2" NB-SW / CL 6000	02
04	TEE-TUBE UNION MATL: SS316 SIZE: 1/2" NPTM x TO SUIT 1/2" OD SS TUBE	02
05	SEAMLESS TUBE MATL: A213 TP316H SIZE: 1/2" OD x 2.1mm THK.	A/R
06	TUBE FITTING / DFDC MATL: SS316 SIZE: 1/2" NPTM x TO SUIT 1/2" OD SS TUBE	06
07	FIVE VALVE MANIFOLD WITH DRAIN PLUG MATL: SS316 PORT SIZE: 1/2" NPTF / PR. TESTING: 9000 PSI	01
08	FORGED GLOBE VALVE BODY: ASTM A182 F316H / STEM MATL: A182 Gr F6a SIZE: 1/2" NB-SW / CL 3000 SPL	02
09	HALF COUPLING / AS PER ANSI B16.11 MATL: ASTM A182 F316H SIZE: 1/2" NB-SW / CL 6000	02

COPY RIGHT AND CONFIDENTIAL
The information on this document is the property of Bharat Heavy Electricals Limited.
It must not be used directly or indirectly in anyway detrimental to the interest to the Company.

DATE

REVISION NO

REVISION NO	DATE

COPY RIGHT AND CONFIDENTIAL

The information on this document is the property of Bharat Heavy Electricals Limited.

It must not be used directly or indirectly in anyway detrimental to the interest to the Company.

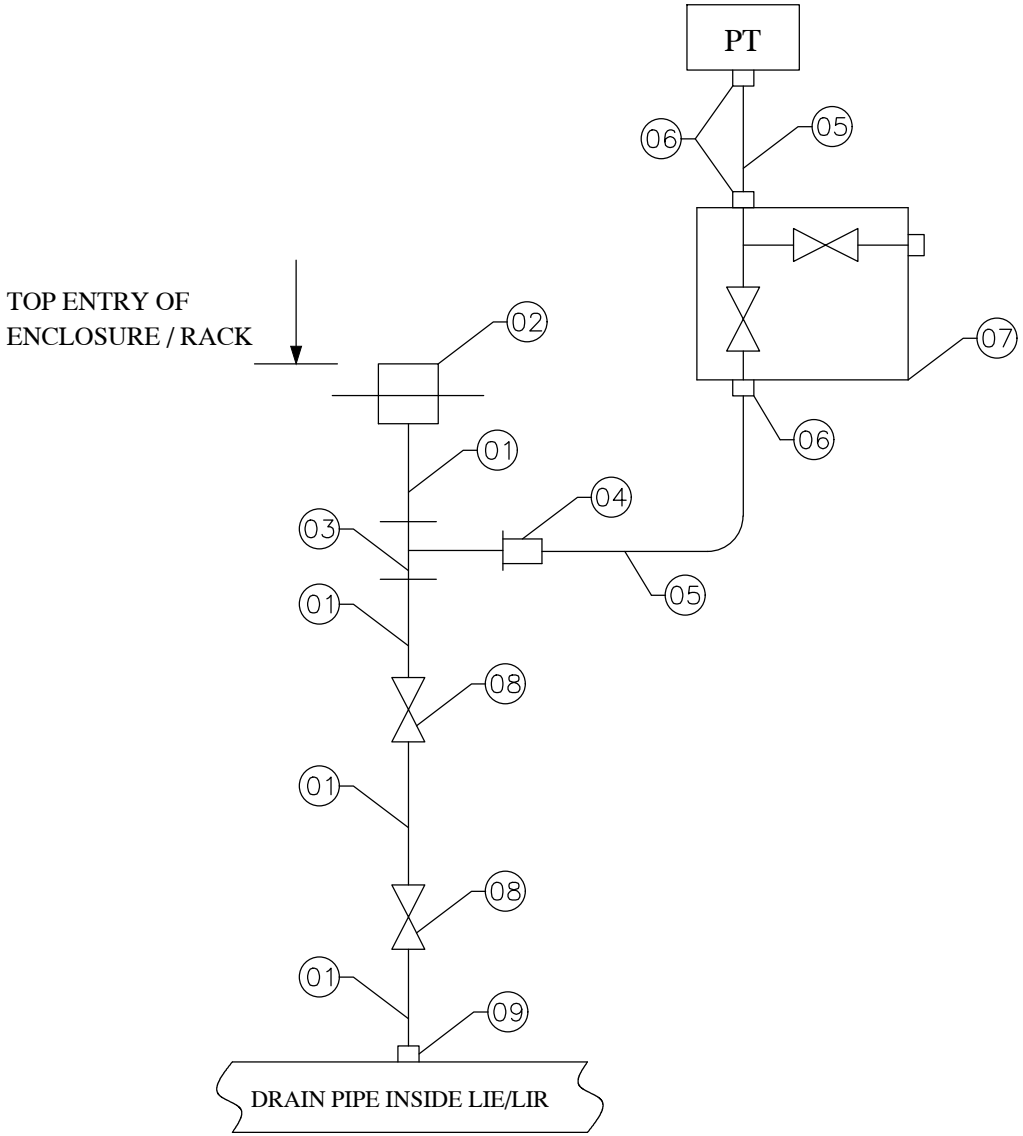

NOTES:

01. "TRANSMITTER BELOW SOURCE"

02. FOR BILL OF MATERIAL REFER PAGE 11 OF 33

CE/416/NTPC/RC/HUP

REV. NO: 00

ITEM NO.	ITEM DESCRIPTION	QTY/INST. (Nos.)
01	IMPULSE PIPE MATL: ASTM A335 P22 SIZE: 1/2" NB-SCH 160	A/R
02	BULKHEAD UNION/COUPLING / AS PER ANSI B16.11 MATL: ASTM A182 F22 SIZE: 1/2" NB-SW / CL 6000	01
03	FORGED EQUAL TEE / AS PER ANSI B16.11 MATL: ASTM A182 F22 SIZE: 1/2" NB-SW / CL 6000	01
04	TEE-TUBE UNION MATL: SS316 SIZE: OD OF 1/2" NB x TO SUIT 1/2" OD SS TUBE	01
05	TUBE MATL: A213 TP316H SIZE: 1/2" OD x 2.1mm THK.	A/R
06	TUBE FITTING / DFDC MATL: SS316 SIZE: 1/2" NPTM x TO SUIT 1/2" OD SS TUBE	03
07	TWO VALVE MANIFOLD WITH VENT PLUG MATL: SS316 PORT SIZE: 1/2" NPTF / PR. TESTING: 6000 PSI	01
08	FORGED GLOBE VALVES BODY: ASTM A182 F22 / STEM MATL: A182 Gr F6a SIZE: 1/2" NB-SW / CL 3000 SPL	02
09	HALF COUPLING / ASPER ANSI B16.11 MATL: ASTM A182 F22 SIZE:1/2" NB-SW / CL 6000	01

COPY RIGHT AND CONFIDENTIAL
The information on this document is the property of Bharat Heavy Electricals Limited.
It must not be used directly or indirectly in anyway detrimental to the interest to the Company.

DATE

REVISION NO

REVISION NO	DATE	COPY RIGHT AND CONFIDENTIAL The information on this document is the property of Bharat Heavy Electricals Limited. It must not be used directly or indirectly in anyway detrimental to the interest to the Company.

A4 - 11

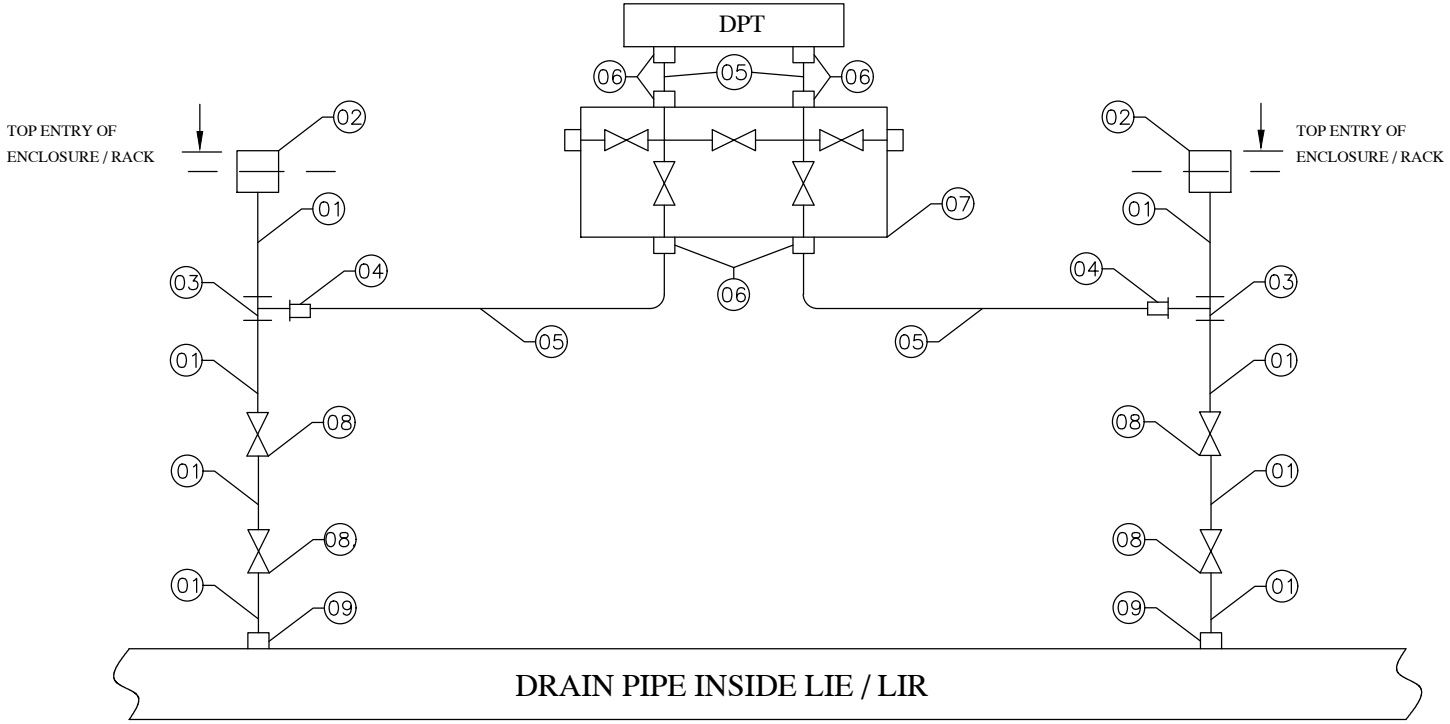

NOTE:

1. " TRANSMITTER BELOW SOURCE"
2. FOR BILL OF MATERIAL REFER PAGE 13 OF 33

CE/416/NTPC/RC/HUP

REV. NO: 00

PAGE: 12 OF 33

ITEM NO.	ITEM DESCRIPTION	QTY/INST. (Nos.)
01	IMPULSE PIPE MATL: ASTM A335 P22 SIZE: 1/2" NB-SCH 160	A/R
02	BULKHEAD UNION/COUPLING / AS PER ANSI B16.11 MATL: ASTM A182 F22 SIZE: 1/2" NB-SW / CL 6000	02
03	FORGED EQUAL TEE / AS PER ANSI B16.11 MATL: ASTM A182 F22 SIZE: 1/2" NB-SW / CL 6000	02
04	TEE-TUBE UNION MATL: SS316 SIZE: OD OF 1/2" NB x TO SUIT 1/2" OD SS TUBE	02
05	TUBE MATL: A213 TP316H SIZE: 1/2" OD x 2.1mm THK.	A/R
06	TUBE FITTING / DFDC MATL: SS316 SIZE: 1/2" NPTM x TO SUIT 1/2" OD SS TUBE	06
07	FIVE VALVE MANIFOLD WITH VENT PLUG MATL: SS316 PORT SIZE: 1/2" NPTF / PR. TESTING: 6000PSI	01
08	FORGED GLOBE VALVES BODY: ASTM A182 F22 / STEM MATL: A182 Gr F6a SIZE: 1/2" NB-SW / CL 3000 SPL	04
09	HALF COUPLING / ASPER ANSI B16.11 MATL: ASTM A182 F22 SIZE:1/2" NB-SW / CL 6000	02

COPY RIGHT AND CONFIDENTIAL
The information on this document is the property of Bharat Heavy Electricals Limited.
It must not be used directly or indirectly in anyway detrimental to the interest to the Company.

DATE

REVISION NO

REVISION NO	DATE	COPY RIGHT AND CONFIDENTIAL The information on this document is the property of Bharat Heavy Electricals Limited. It must not be used directly or indirectly in anyway detrimental to the interest to the Company.

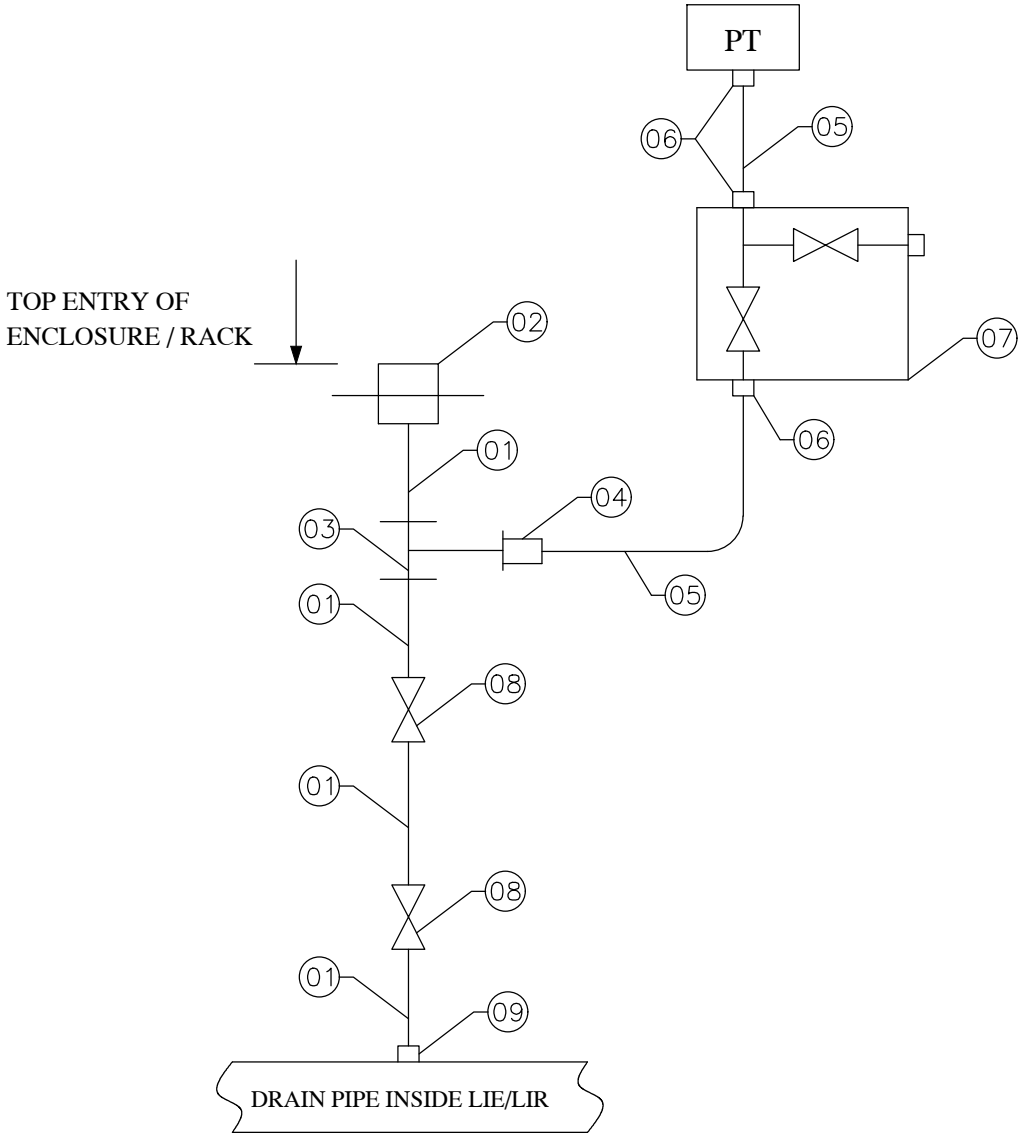

NOTES:

1. " TRANSMITTER BELOW SOURCE"
2. FOR BILL OF MATERIAL REFER PAGE 15 OF 33

A4 - 11

CE/416/NTPC/RC/HUP

REV. NO: 00

PAGE: 14 OF 33

ITEM NO.	ITEM DESCRIPTION	QTY/INST.
01	IMPULSE PIPE MATL: ASTM A106 Gr. C SIZE: 1/2" NB-SCH 160	A/R
02	BULKHEAD UNION / COUPLING / AS PER ANSI B16.11 MATL: ASTM A105 SIZE: 1/2" NB-SW / CL 6000	01
03	FORGED EQUAL TEE / AS PER ANSI B16.11 MATL: ASTM A105 SIZE: 1/2" NB-SW / CL 6000	01
04	TEE-TUBE UNION MATL: SS316 SIZE: OD OF 1/2" NB-PIPE x TO SUIT 1/2" OD SS TUBE	01
05	TUBE MATL: A213 TP316H SIZE: 1/2" OD x 2.1mm THK.	A/R
06	TUBE FITTING: DFDC MATL: SS316 SIZE: 1/2" NPTM x TO SUIT 1/2" OD SS TUBE	03
07	TWO VALVE MANIFOLD WITH VENT PLUG BODY: SS316 PORT SIZE: 1/2" NPTF / RATING: 6000 PSI	01
08	FORGED GLOBE VALVE BODY: ASTM A105 / STEM MATL: A182 Gr F6a SIZE: 1/2" NB-SW / CL 3000 SPL	02
09	HALF COUPLING / AS PER ANSI B16.11 MATL: ASTM A105 SIZE: 1/2" NB-SW / CL 6000	01

COPY RIGHT AND CONFIDENTIAL
The information on this document is the property of Bharat Heavy Electricals Limited.
It must not be used directly or indirectly in anyway detrimental to the interest to the Company.

DATE

REVISION NO

REVISION NO	DATE	COPY RIGHT AND CONFIDENTIAL The information on this document is the property of Bharat Heavy Electricals Limited. It must not be used directly or indirectly in anyway detrimental to the interest to the Company.		

A4 - 11

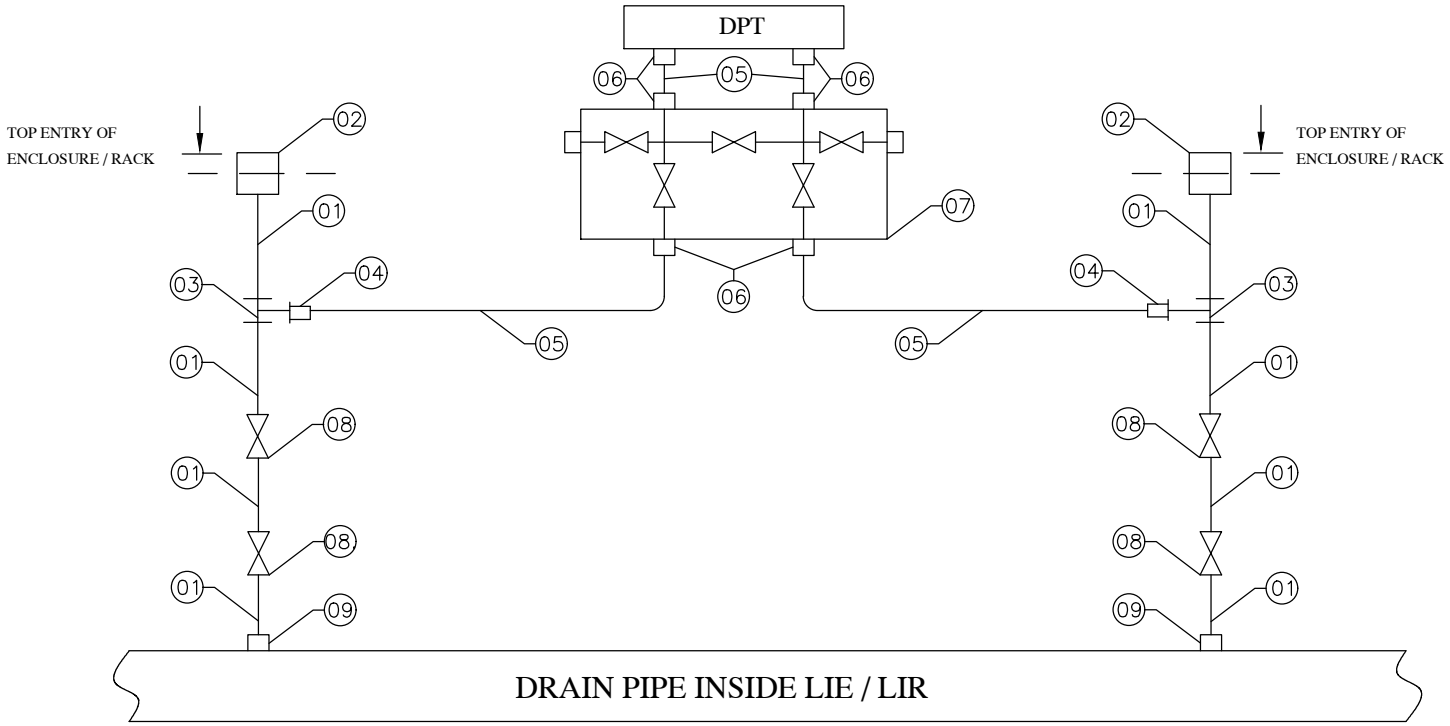

NOTE:

1. " TRANSMITTER BELOW SOURCE"
2. FOR BILL OF MATERIAL REFER PAGE 17 OF 33

CE/416/NTPC/RC/HUP

REV. NO: 00

PAGE: 16 OF 33

ITEM NO.	ITEM DESCRIPTION	QTY/INST.
01	IMPULSE PIPE MATL: ASTM A106 Gr. C SIZE: 1/2" NB-SCH 160	A/R
02	BULKHEAD UNION / COUPLING / AS PER ANSI B16.11 MATL: ASTM A105 SIZE: 1/2" NB-SW / CL 6000	02
03	FORGED EQUAL TEE / AS PER ANSI B16.11 MATL: ASTM A105 SIZE: 1/2" NB-SW / CL 6000	02
04	TEE-TUBE UNION MATL: SS316 SIZE: OD OF 1/2" NB-PIPE x TO SUIT 1/2" OD SS TUBE	02
05	TUBE MATL: A213 TP316H SIZE: 1/2" OD x 2.1mm THK.	A/R
06	TUBE FITTING: DFDC MATL: SS316 SIZE: 1/2" NPTM x TO SUIT 1/2" OD SS TUBE	06
07	FIVE VALVE MANIFOLD WITH VENT PLUG BODY: SS316 PORT SIZE: 1/2" NPTF / RATING: 6000 PSI	01
08	FORGED GLOBE VALVE BODY: ASTM A105 / STEM MATL: A182 Gr F6a SIZE: 1/2" NB-SW / CL 3000 SPL	04
09	HALF COUPLING / AS PER ANSI B16.11 MATL: ASTM A105 SIZE: 1/2" NB-SW / CL 6000	02

COPY RIGHT AND CONFIDENTIAL
The information on this document is the property of Bharat Heavy Electricals Limited.
It must not be used directly or indirectly in anyway detrimental to the interest to the Company.

DATE

REVISION NO

REVISION NO	DATE	COPY RIGHT AND CONFIDENTIAL The information on this document is the property of Bharat Heavy Electricals Limited. It must not be used directly or indirectly in anyway detrimental to the interest to the Company.

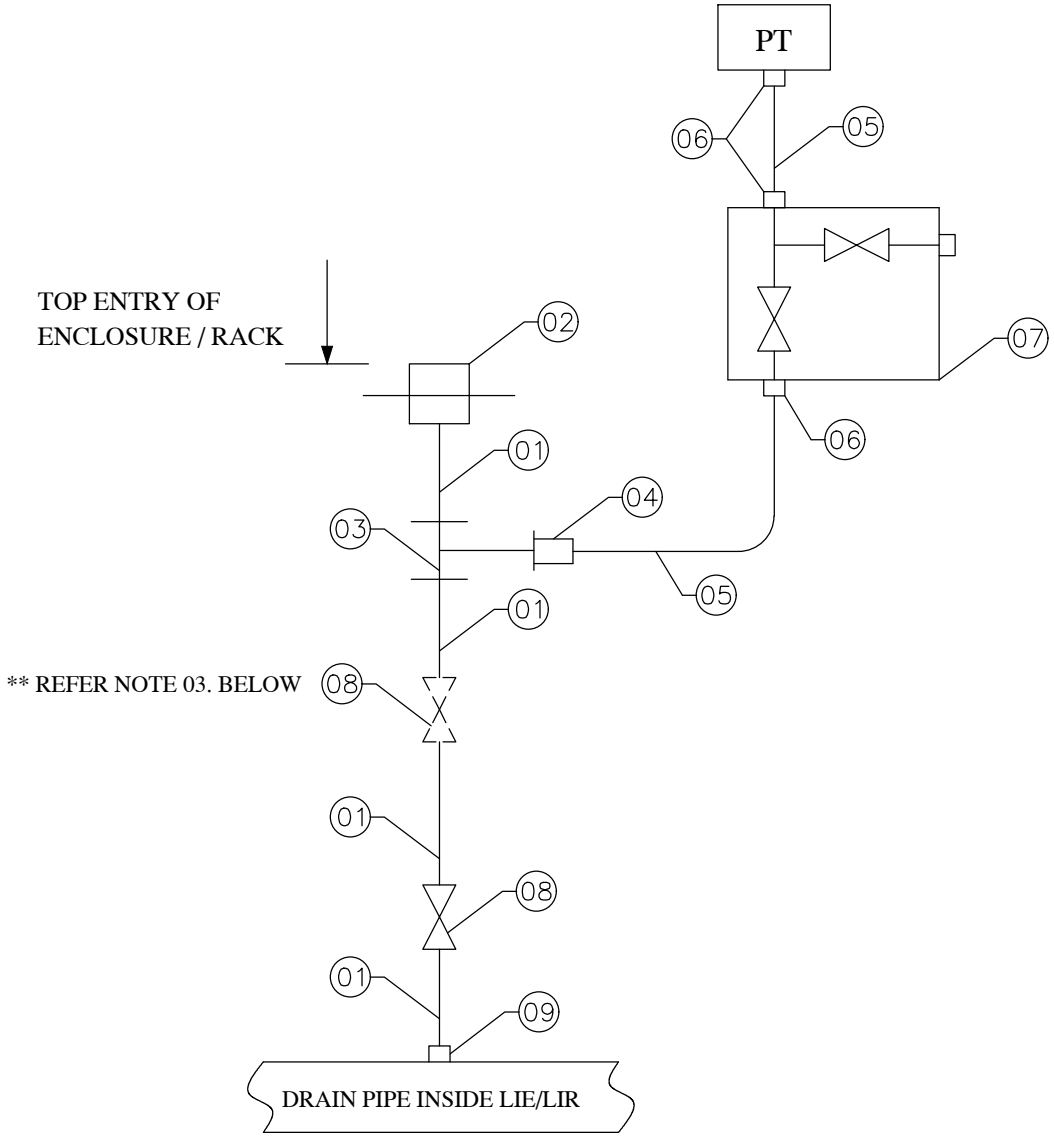

NOTES:

01. "TRANSMITTER BELOW SOURCE"
02. FOR BILL OF MATERIAL REFER PAGE 19 OF 33
03. ADDTIONAL DRAIN VALVE (ITEM 08) IS APPLICABLE FOR DESIGN PRESS/TEMP > OR EQUAL TO 40 KG/CM2 OR 280 DEG C

A4 - 11

CE/416/NTPC/RC/HUP

REV. NO: 00

ITEM NO.	ITEM DESCRIPTION	QTY/INST.
01	IMPULSE PIPE MATL: ASTM A106 Gr. C SIZE: 1/2" NB-SCH 80	A/R
02	BULKHEAD UNION / COUPLING / AS PER ANSI B16.11 MATL: ASTM A105 SIZE: 1/2" NB-SW / CL 3000	01
03	FORGED EQUAL TEE / AS PER ANSI B16.11 MATL: ASTM A105 SIZE: 1/2" NB-SW / CL 3000	01
04	TEE-TUBE UNION MATL: SS316 SIZE: OD OF 1/2" NB-PIPE x TO SUIT 1/2" OD SS TUBE	01
05	TUBE MATL: A213 TP316H SIZE: 1/2" OD x 2.1mm THK.	A/R
06	TUBE FITTING: DFDC MATL: SS316 SIZE: 1/2" NPTM x TO SUIT 1/2" OD SS TUBE	03
07	TWO VALVE MANIFOLD WITH VENT PLUG BODY: SS316 PORT SIZE: 1/2" NPTF / RATING: 3000 PSI	01
08**	FORGED GLOBE VALVE BODY: ASTM A105 / STEM MATL: A182 Gr F6a SIZE: 1/2" NB-SW / CL 800	A/R
09	HALF COUPLING / AS PER ANSI B16.11 MATL: ASTM A105 SIZE: 1/2" NB-SW / CL 3000	01

COPY RIGHT AND CONFIDENTIAL
The information on this document is the property of Bharat Heavy Electricals Limited.
It must not be used directly or indirectly in anyway detrimental to the interest to the Company.

DATE

REVISION NO

REVISION NO	DATE	COPY RIGHT AND CONFIDENTIAL The information on this document is the property of Bharat Heavy Electricals Limited. It must not be used directly or indirectly in anyway detrimental to the interest to the Company.		

A4 - 11

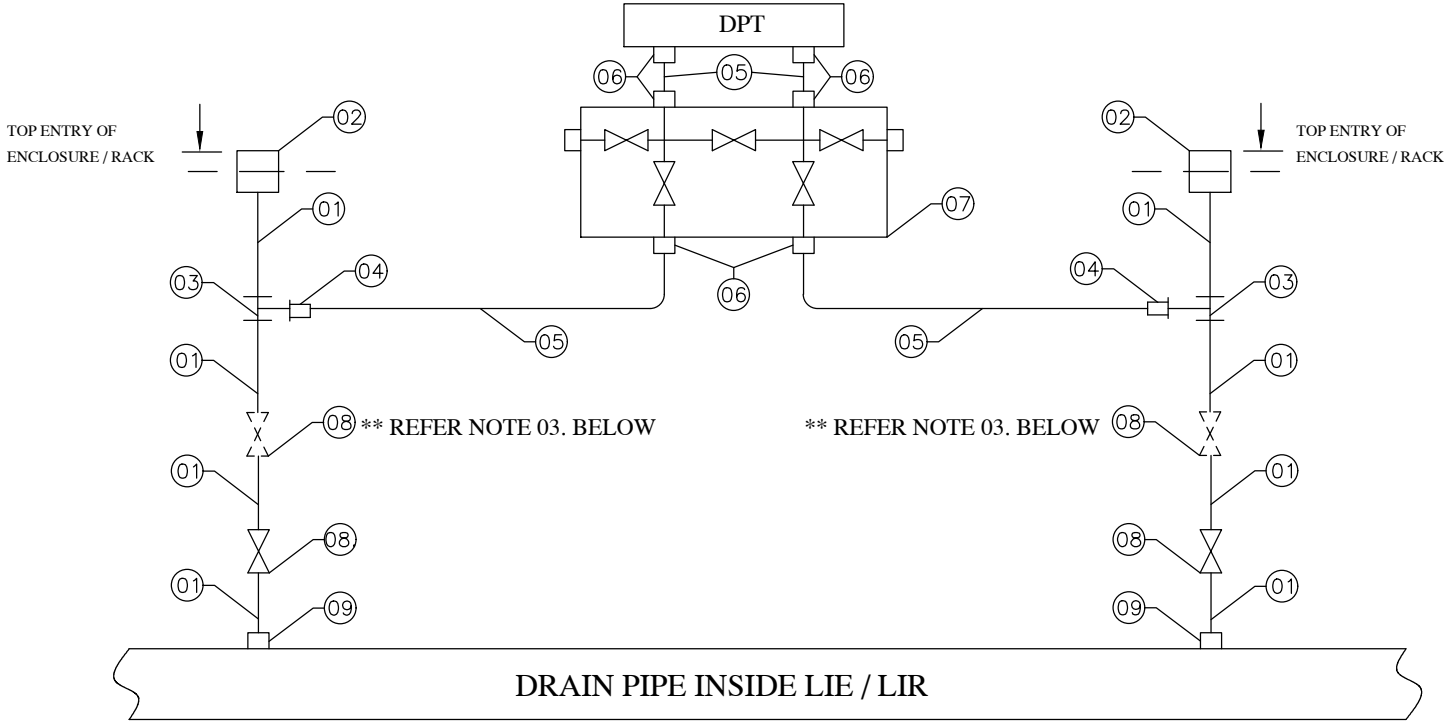

NOTE:

01. " TRANSMITTER BELOW SOURCE"
02. FOR BILL OF MATERIAL REFER PAGE 21 OF 33
03. ADDTIONAL DRAIN VALVE (ITEM 08) IS APPLICABLE FOR DESIGN PRESS/TEMP > OR EQUAL TO 40 KG/CM2 OR 280 DEG C

CE/416/NTPC/RC/HUP

REV. NO: 00

PAGE: 20 OF 33

ITEM NO.	ITEM DESCRIPTION	QTY/INST.
01	IMPULSE PIPE MATL: ASTM A106 Gr. C SIZE: 1/2" NB-SCH 80	A/R
02	BULKHEAD UNION / COUPLING / AS PER ANSI B16.11 MATL: ASTM A105 SIZE: 1/2" NB-SW / CL 3000	02
03	FORGED EQUAL TEE / AS PER ANSI B16.11 MATL: ASTM A105 SIZE: 1/2" NB-SW / CL 3000	02
04	TEE-TUBE UNION MATL: SS316 SIZE: OD OF 1/2" NB-PIPE x TO SUIT 1/2" OD SS TUBE	02
05	TUBE MATL: A213 TP316H SIZE: 1/2" OD x 2.1mm THK.	A/R
06	TUBE FITTING: DFDC MATL: SS316 SIZE: 1/2" NPTM x TO SUIT 1/2" OD SS TUBE	06
07	TWO VALVE MANIFOLD WITH VENT PLUG BODY: SS316 PORT SIZE: 1/2" NPTF / RATING: 3000 PSI	02
08**	FORGED GLOBE VALVE BODY: ASTM A105 / STEM MATL: A182 Gr F6a SIZE: 1/2" NB-SW / CL 800	A/R
09	HALF COUPLING / AS PER ANSI B16.11 MATL: ASTM A105 SIZE: 1/2" NB-SW / CL 3000	02

COPY RIGHT AND CONFIDENTIAL
The information on this document is the property of Bharat Heavy Electricals Limited.
It must not be used directly or indirectly in anyway detrimental to the interest to the Company.

DATE

REVISION NO

REVISION NO	DATE	COPY RIGHT AND CONFIDENTIAL The information on this document is the property of Bharat Heavy Electricals Limited. It must not be used directly or indirectly in anyway detrimental to the interest to the Company.

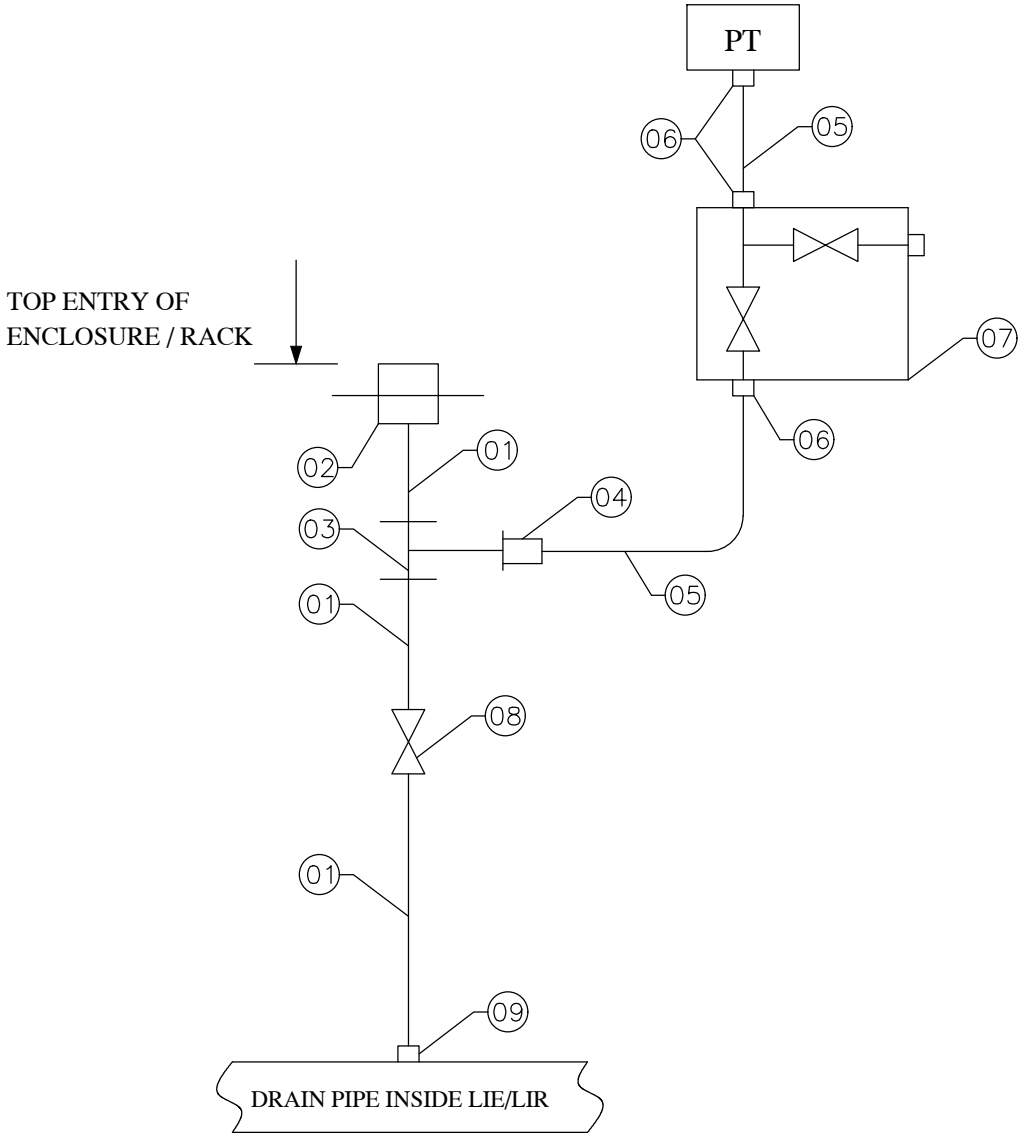

NOTE:

1. " TRANSMITTER BELOW SOURCE"
2. FOR BILL OF MATERIAL REFER PAGE 23 OF 33

A4 - 11

CE/416/NTPC/RC/HUP

REV. NO: 00

PAGE: 22 OF 33

ITEM NO.	ITEM DESCRIPTION	QTY/INST.
01	IMPULSE PIPE MATL : ASTM A312 TP316L SIZE : 1/2" NB-SCH 80	A/R
02	BULK HEAD UNION / COUPLING/AS PER ANSI B16:11 MATL:ASTM A182 F316L SIZE : 1/2" NB-SW CL 3000 LBS	01
03	FORGED EQUAL TEE / AS PER ANSI B16.11 MATL : ASTM A182 F316L SIZE : 1/2" NB-SW / CL 3000 LBS	01
04	TEE-TUBE UNION MATL: SS316L SIZE: OD OF 1/2" NBxTO SUIT 1/2" OD SS TUBE	01
05	TUBE MATL. : A213 TP316L SIZE : OD x 2.1 mmTHK.	A/R
06	TUBE FITTING / DFDC MATL. : SS316L SIZE : 1/2" NPTM x TO SUIT 1/2" OD SS TUBE	03
07	TWO VALVE MANIFOLD WITH VENT PLUG MATL. : SS316L PORT SIZE : 1/2" NPTF PR. TESTING : 3000PSI	01
08	FORGED GLOBE VALVES BODY : ASTM A182 F316L / STEM MATL: A182 Gr.F6a SIZE : 1/2" NB-SW / CL 800	01
09	HALF COUPLING /ASPER ANSI B16.11 MATL : ASTM A182 F316L SIZE:1/2" NB-SW / CL3000 LBS	01

COPY RIGHT AND CONFIDENTIAL
The information on this document is the property of Bharat Heavy Electricals Limited.
It must not be used directly or indirectly in anyway detrimental to the interest to the Company.

DATE

REVISION NO

REVISION NO	DATE	COPY RIGHT AND CONFIDENTIAL The information on this document is the property of Bharat Heavy Electricals Limited. It must not be used directly or indirectly in anyway detrimental to the interest to the Company.		

A4 - 11

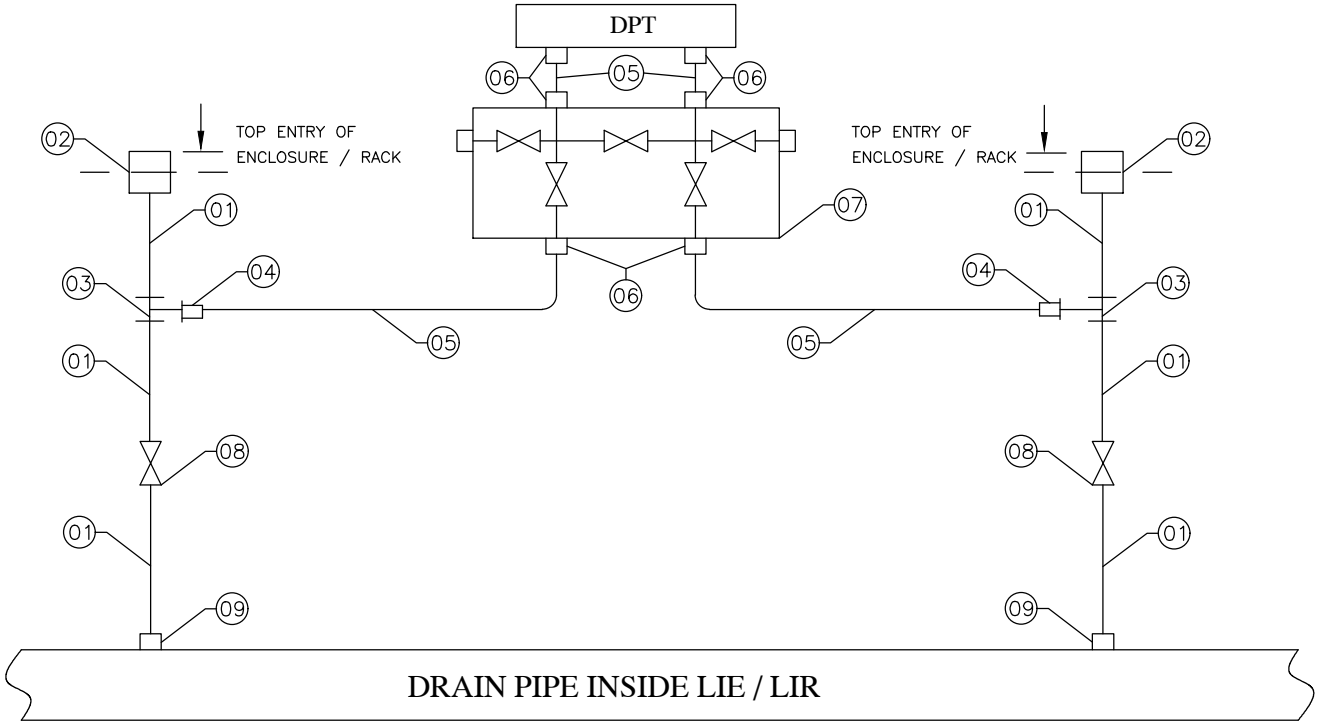

NOTE:

1. " TRANSMITTER BELOW SOURCE"
2. FOR BILL OF MATERIAL REFER PAGE 25 OF 33

CE/416/NTPC/RC/HUP

REV. NO: 00

PAGE: 24 OF 33

ITEM NO.	ITEM DESCRIPTION	QTY/INST.
01	IMPULSE PIPE MATL : ASTM A312 TP316L SIZE : 1/2" NB-SCH 80	A/R
02	BULK HEAD UNION/COUPLING/AS PER ANSI B16:11 MATL:ASTM A182 F316L SIZE : 1/2" NB-SW CL 3000 LBS	02
03	FORGED EQUAL TEE / AS PER ANSI B16.11 MATL : ASTM A182 F316L SIZE : 1/2" NB-SW / CL 3000 LBS	02
04	TEE-TUBE UNION MATL: SS316L SIZE: OD OF 1/2" NBxTO SUIT 1/2" OD SS TUBE	02
05	TUBE MATL. : A213 TP316L SIZE : OD x 2.1 mmTHK.	A/R
06	TUBE FITTING / DFDC MATL. : SS316L SIZE : 1/2" NPTM x TO SUIT 1/2" OD SS TUBE	06
07	FIVE VALVE MANIFOLD WITH VENT PLUG MATL. : SS316L PORT SIZE : 1/2" NPTF PR. TESTING : 3000PSI	01
08	FORGED GLOBE VALVES BODY : ASTM A182 F316L / STEM MATL: A182 Gr.F6a SIZE : 1/2" NB-SW / CL 800	02
09	HALF COUPLING /ASPER ANSI B16.11 MATL : ASTM A182 F316L SIZE:1/2" NB-SW / CL3000 LBS	02

COPY RIGHT AND CONFIDENTIAL
The information on this document is the property of Bharat Heavy Electricals Limited.
It must not be used directly or indirectly in anyway detrimental to the interest to the Company.

DATE

REVISION NO

REVISION NO	DATE	COPY RIGHT AND CONFIDENTIAL The information on this document is the property of Bharat Heavy Electricals Limited. It must not be used directly or indirectly in anyway detrimental to the interest to the Company.		

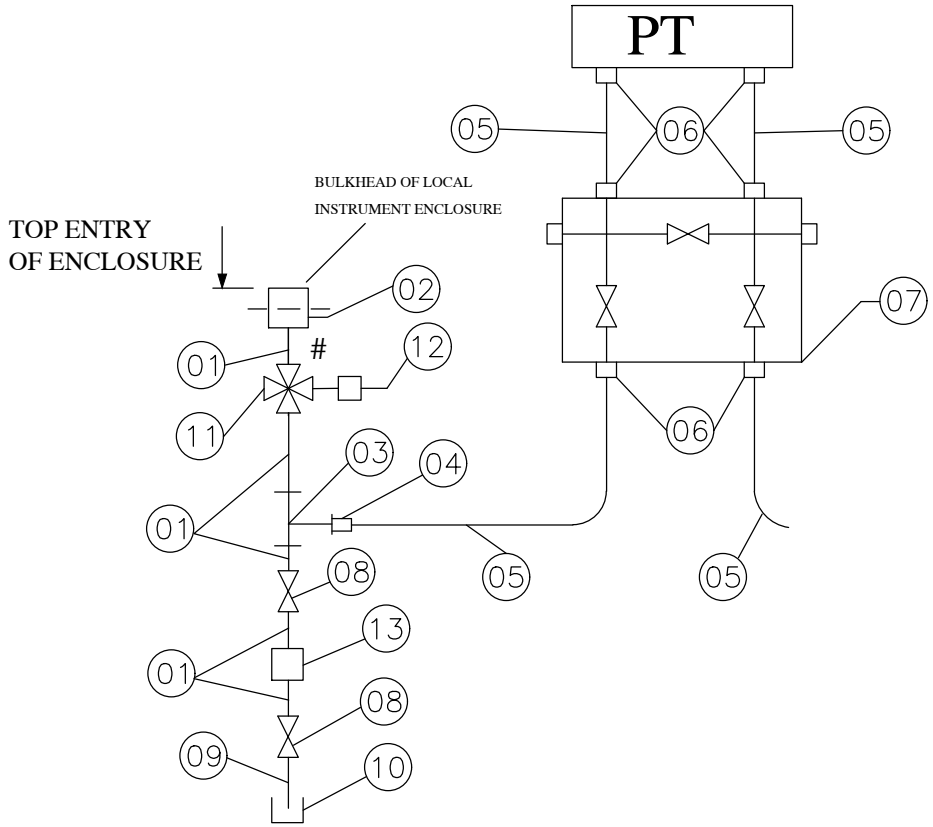

NOTES:

01. "TRANSMITTER BELOW SOURCE"
02. FOR BILL OF MATERIAL REFER PAGE 27 OF 33
03. # FOR INTERMITTANT PURGING REFER PAGE NO. 32 & 33 OF 33

CE/416/NTPC/RC/HUP

REV. NO: 00

ITEM NO.	ITEM DESCRIPTION	QTY/ INST. (Nos.)
02	IMPULSE PIPE MAT: ASTM A106 Gr. C SIZE: 3/4" NB-SCH 80	A/R
02	BULKHEAD UNION / COUPLING / AS PER ANSI B16.11 MATL: ASTM A105 SIZE: 3/4" NB-SW / RATING: CL 3000	01
03	FORGED EQUAL TEE / AS PER ANSI B16.11 MATL: ASTM A105 SIZE: 3/4" NB-SW / RATING: CL 3000	01
04	TUBE UNION MATL: SS316 SIZE: OD OF 3/4" NB PIPE x TO SUIT 1/2" SS TUBE	01
05	TUBE MATL: A213 TP316L SIZE: 1/2" OD x 1.13mm THK.	A/R
06	TUBE FITTING / DFDC MATL: SS316 SIZE: 1/2" NPT(M) x TO SUIT 1/2" OD TUBE	06
07	THREE VALVE MANIFOLD / PR. TESTING 3000PSI MATL: SS316 PORT SIZE: 1/2" NPT (F)	01
08	FORGED GLOBE VALVE BODY: ASTM A105 SIZE: 3/4" NB-SW / CL 800	02
09	NIPPLE / MATL: ASTM A106 Gr B/C SIZE: 3/4" NB-SCH 80 CONN : ONE END PLAIN x OTHER END 3/4"NPTM	01
10	CAP MATL: ASTM A105 SIZE: 3/4" NPTF CL 3000	01
10	FOUR WAY VALVE BODY MATL: ASTM A105 SIZE: (2x3/4" NB-SW) x (2x1/2" NPTF) / RATING: CL 800	01
11	QUICK DISCONNECTING FITTING MATL: SS 304 SIZE: 1/2" NPTM	01
12	DRAIN POT: 2" NB-SCH 80 BODY: A106 Gr B/C / CONN. 3/4" NB-SW	01

COPY RIGHT AND CONFIDENTIAL
The information on this document is the property of Bharat Heavy Electricals Limited.
It must not be used directly or indirectly in anyway detrimental to the interest to the Company.

DATE

REVISION NO

REVISION NO	DATE	COPY RIGHT AND CONFIDENTIAL The information on this document is the property of Bharat Heavy Electricals Limited. It must not be used directly or indirectly in anyway detrimental to the interest to the Company.		

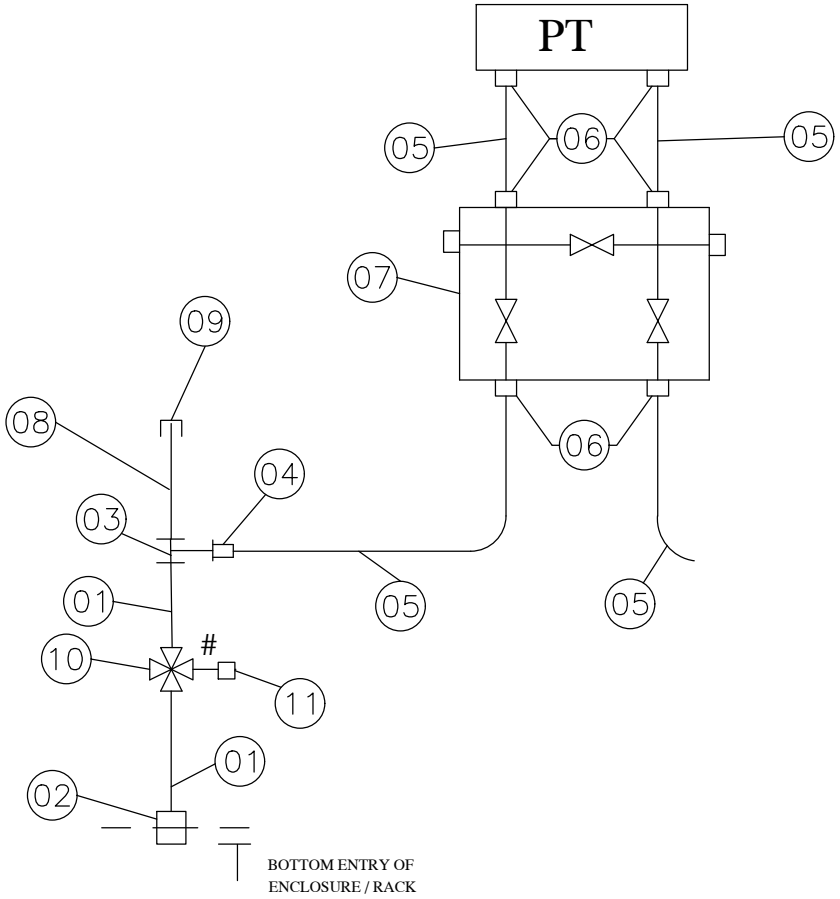

NOTES:

01. "TRANSMITTER BELOW SOURCE"
02. FOR BILL OF MATERIAL REFER PAGE 29 OF 33
04. # FOR INTERMITTANT PURGING REFER PAGE NO 32 & 33 OF 33

CE/416/NTPC/RC/HUP

REV. NO: 00

ITEM NO.	ITEM DESCRIPTION	QTY/ INST. (Nos.)
01	IMPULSE PIPE MATL: A106 Gr. C SIZE: 3/4" NB-SW SCH 80	A/R
02	BULKHEAD UNION / COUPLING / AS PER ANSI B16.11 MATL: ASTM A105 SIZE: 3/4" NB-SW / RATING: CL 3000	01
03	FORGED EQUAL TEE / AS PER ANSI B16.11 MATL: ASTM A105 SIZE: 3/4" NB-SW / RATING: CL 3000	01
04	TEE TUBE UNION MATL: SS316 SIZE: OD OF 3/4" NB PIPE x TO SUIT 1/2" SS TUBE	01
05	TUBE MATL: ASTM A213 TP316L SIZE: 1/2" OD x 1.13mm THK.	A/R
06	TUBE FITTING / DFDC MATL: SS316 SIZE: 1/2" NPT (M) x TO SUIT 1/2" OD TUBE,	06
07	THREE VALVE MANIFOLD MATL: SS316 PORT SIZE: 1/2" NPT(F) / PR. TESTING: 3000PSI	01
08	NIPPLE/ MATL: ASTM A106 Gr B/C SIZE: 3/4" NB-SCH 80 CONN. ONE END PLAIN x OTHER END 3/4" NPTM	01
09	CAP MATL: ASTM A105 SIZE: 3/4" NPTF CL 3000	01
10	FOUR WAY VALVE MATL: BODY ASTM A105 SIZE: 2x3/4" NB-SW x 2x1/2" NPTF / RATING: CL 800	01
11	QUICK DISCONNECTING FITTING MATL: SS 304 SIZE: 1/2" NPTM	01

COPY RIGHT AND CONFIDENTIAL
The information on this document is the property of Bharat Heavy Electricals Limited.
It must not be used directly or indirectly in anyway detrimental to the interest to the Company.

DATE

REVISION NO

REVISION NO	DATE	COPY RIGHT AND CONFIDENTIAL The information on this document is the property of Bharat Heavy Electricals Limited. It must not be used directly or indirectly in anyway detrimental to the interest to the Company.		

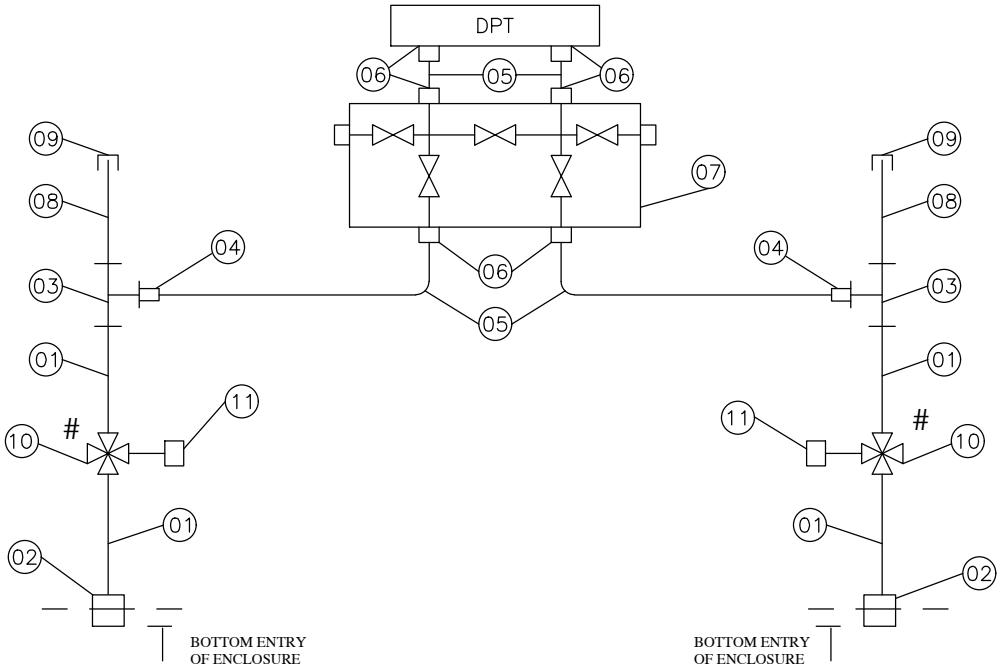

NOTES:

01. "TRANSMITTER BELOW SOURCE"
02. FOR BILL OF MATERIAL REFER PAGE 31 OF 33
03. # FOR INTERMITTANT PURGING REFER PAGE NO 32 & 33 OF 33

CE/416/NTPC/RC/HUP

REV. NO: 00

ITEM NO.	ITEM DESCRIPTION	QTY/INST.
01	IMPULSE PIPE MATL: ASTM A106 Gr. C SIZE: 3/4" NB-SCH 80	A/R
02	BULKHEAD UNION / COUPLING / AS PER ANSI B16.11 MATL: ASTM A105 SIZE: 3/4" NB-SW / CL 3000	02
03	FORGED EQUAL TEE / AS PER ANSI B16.11 MATL: ASTM A105 SIZE: 3/4" NB-SW / CL 3000	02
04	TEE TUBE UNION MATL: SS316 CONN: OD OF 3/4" NB-PIPE x TO SUIT TO 1/2" OD SS TUBE	02
05	TUBE MATL: A213 TP316L SIZE: 1/2" OD x 1.13mm THK.	A/R
06	TUBE FITTING / DFDC MATL: SS316 CONN: 1/2" NPTM x TO SUIT 1/2" OD SS TUBE	06
07	FIVE VALVE MANIFOLD WITH VENT PLUGS BODY: SS316 PORT SIZE: 1/2" NPTF / PR. TESTING: 3000PSI	01
08	NIPPLE MATL: ASTM A106 Gr. B/C SIZE: ONE END PLAIN x OTHER END 3/4" NPTM	02
09	C.S CAP MATL: ASTM A105 SIZE: 3/4" NPTF / CL 3000	02
10	FOUR WAY VALVE MATL: ASTM A105 / RATING CL. 800 SIZE: (2x3/4" NB-SW) x (2x1/2" NPTF) / RATING: CL 800	02
11	QUICK DISCONNECTING FITTING MATL: SS 304 SIZE: 1/2" NPTM	02

COPY RIGHT AND CONFIDENTIAL
The information on this document is the property of Bharat Heavy Electricals Limited.
It must not be used directly or indirectly in anyway detrimental to the interest to the Company.

DATE

REVISION NO

REVISION NO	DATE	COPY RIGHT AND CONFIDENTIAL The information on this document is the property of Bharat Heavy Electricals Limited. It must not be used directly or indirectly in anyway detrimental to the interest to the Company.		

TYPICAL PURGE AIR SCHEME

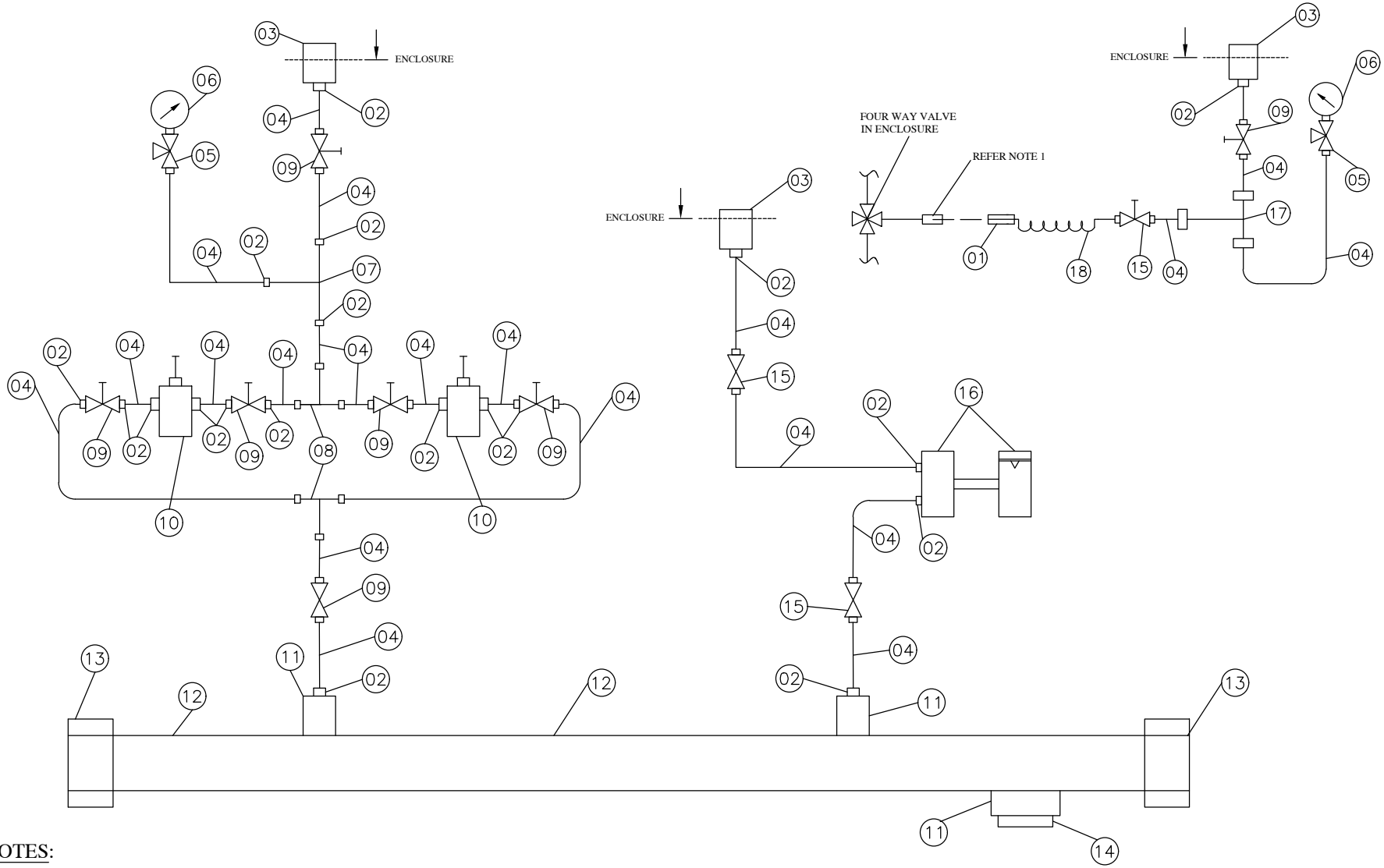

NOTES:

01. "TRANSMITTER BELOW SOURCE"
02. FOR BILL OF MATERIAL REFER PAGE 33 OF 33

CE/416/NTPC/RC/HUP

REV. NO: 00

REVISION NO	DATE

COPY RIGHT AND CONFIDENTIAL

The information on this document is the property of Bharat Heavy Electricals Limited.
It must not be used directly or indirectly in anyway detrimental to the interest to the Company.

ITEM NO.	ITEM DESCRIPTION	QTY/ INST. (Nos.)
01	QUICK DISCONNECTING FITTING-SS304/MALE SIZE : END CONN. TO SUIT 1/2" OD SS-TUBE	01
02	TUBE CONNECTOR SIZE : 1/2" NPTM x TO SUIT 1/2" OD SS TUBE MATL. ASTM Gr. SS316	03
03	BULK HEAD UNION / MATL : SS316 SIZE : 1/2" NPT (F) x 1/2" NPTF	A/R
04	TUBE MATL: ASTM A213 TP316L SIZE: 1/2" OD - 1.13mm THK.	A/R
05	THREE WAY GUAGE COCK MATL: SS316 SIZE: 1/2" NPTF x TO SUIT 1/2" OD SS TUBE	02
06	PRESSURE GUAGE / DIAL SIZE : 4" RANGE : 0-10 KG/Sq. CM BOTTOM CONN: 1/2" NPTM	02
07	EQUAL TEE FITTING / SS316 END CONN: 1/2" NPTF x (2 x TO SUIT 1/2" OD SS TUBE)	01
08	EQUAL TEE FITTING / FLARELESS FITTING SIZE : TO SUIT 1/2" OD SS TUBE	02
09	ISOLATING VALVE/GATE TYPE PROCESS CONN : 1/2" OD SS TUBE MTL : ASTM A182 F316	04
10	AIR FILTER REGULATOR PROCESS CONN : 1/2" NPTF	02

ITEM NO.	ITEM DESCRIPTION	QTY/ INST. (Nos.)
11	SS COUPLET SIZE : 1/2" NPTF MATL : SS316	01
12	AIR HEADER SIZE : 1" NB-SCH 40 / MATL: SS316	01
13	SS END CAP SIZE : 1" BSPF / MATL : SS316	02
14	PLUG SIZE : 1/2" NPTM MAT : SS316	01
15	NEEDLE VALVE/MATL : SS316 SIZE : END CONN. TO SUIT 1/2" OD SS TUBE	02
16	PURGE ROTAMETER PROCESS CONN : 1/2" NPTF	01
17	EQUAL TEE FITTING / MATL : A182 Gr F316 END CONN. - TO SUIT 1/2" OD SS TUBE	01
18	NYLON FLEXIBLE HOSE BRAIDED WITH SS WIRE SIZE = 1/2 " DIA.	1 MTR

A4-10		Ref : CE/416/LIE/LIR/OGA1
		Rev. : 00
		Page : 01 of 04

PROJECT: RATE CONTRACT FOR LIE/LIR

CUSTOMER: M/s NTPC

CONSULTANT: M/s NTPC

COPY RIGHT AND CONFIDENTIAL

THE INFORMATION ON THIS DOCUMENT IS THE PROPERTY OF BHARAT HEAVY ELECTRICALS LIMITED. IT MUST NOT BE USED DIRECTLY OR INDIRECTLY IN ANY WAY DETRIMENTAL TO THE INTEREST OF THE COMPANY.

SCHEMATIC DRAWINGS
FOR
LOCAL INSTRUMENT ENCLOSURE / RACKS
(LIE / LIR)

REVISIONS :	APPROVED BY		
	DIPTENDU GHOSH		
	PREPARED BY	ISSUED	DATE
	RAJESH LINGUTLA	416	09/07/24

FIRST ANGLE PROJECTION

(ALL DIMENSIONS ARE IN mm)

DRG. No. CE/416/LIE/LIR/OGA2

COPYRIGHT AND CONFIDENTIAL
THE INFORMATION ON THIS DOCUMENT IS THE PROPERTY OF BHARAT HEAVY ELECTRICALS LTD. IT MUST NOT BE USED DIRECTLY OR INDIRECTLY IN ANY WAY DETRIMENTAL TO THE INTEREST OF THE COMPANY.

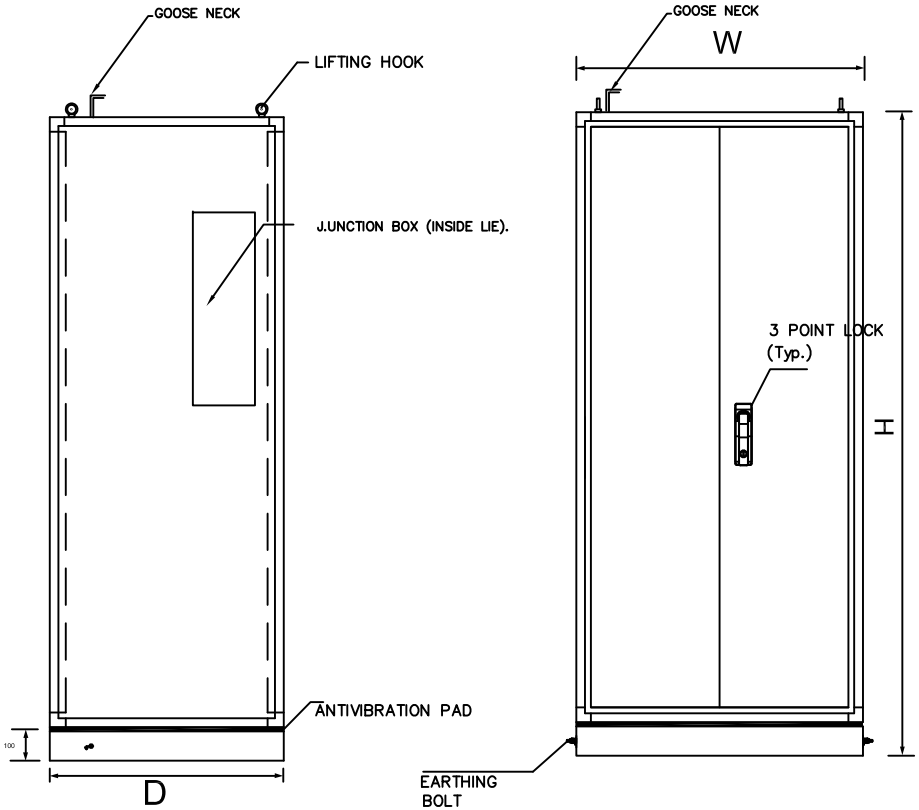

NOTES:-

1. ALL SHEETs ARE 1.6mm CRCA SHEET 3mm
2. ALL DOORS WILL BE FLUSH / CONCEALED TYPE
3. BULK HEAD PLATE (Minimum 6mm thick) FOR TOP & BOTTOM SHALL BE PROVIDED
4. CABLE GLAND PLATE OF THICKNESS 3.0 mm. CRCA SHEET SHALL BE PROVIDED AT BOTTOM OF J.B
5. ENCLOSURE SHALL BE OF IP-55 PROTECTION CLASS
6. TERMINAL SHALL BE PROVIDED IN SIDE THE J.B. AS PER TRANSMITTER GROUPING
7. DOORS SHALL BE THREE POINT LOCKING FOR FRONT AND REAR DOOR
8. GASKET SHALL BE PROVIDED BETWEEN BULK HEAD PLATE & ENCLOSURE
9. EARTH BUS BAR 25x6mm COPPER SHALL BE USED
10. MIN JB DIMENSION 800 MM X 200 MM X 200 MM.
11. BASE FRAME SHALL BE MADE OF ISMC 100 5mm
12. 1 No LED 11W,230V AC WITH FIXTURE SHALL BE PROVIDED
13. DRAIN PIPE SLOPE WILL BE I : 25 APPROX.
14. POWER SOCKET SHALL BE PROVIDED IN J.B. OF ENCLOSURE

LIE TYPE	H	W	D
A	2200	1400	800
B	2200	1000	800
C	2200	700	800

REF. DRG. No. FLREF

SIGN. & DATE

INVENTORY No.

REV.	DATE	ALTERED –	REV.	DATE	ALTERED –
–	–	CHECKED –	–	–	CHECKED –
		APPROVED –			APPROVED –

	NAME	SIGN	DATE
DRAWN	SAMY		14.09.2021
CHECKED	RKL		14.09.2021
APPROVED	RKL		14.09.2021

DEPT. BOP | CODE 416

PROD / PROJ : –

CUSTOMER: –

BHARAT HEAVY ELECTRICALS LIMITED.
ELECTRONICS DIVISION, BANGALORE

TITLE: OGA-FOR-LIE

No. OF SHEETS 04

SHEET No. 02

WBS. No. –

DRG. No. CE/416/LIE/LIR/OGA2

REV 00

FORM No. A3-03

A3 SIZE

FIRST ANGLE PROJECTION

(ALL DIMENSIONS ARE IN mm)

DRG. No. CE/416/LIE/LIR/OGA2

COPYRIGHT AND CONFIDENTIAL
THE INFORMATION ON THIS DOCUMENT IS THE PROPERTY OF BHARAT HEAVY ELECTRICALS LTD. IT MUST NOT BE USED DIRECTLY OR INDIRECTLY IN ANY WAY DETRIMENTAL TO THE INTEREST OF THE COMPANY.

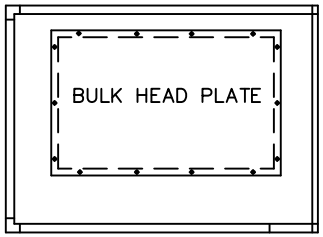

TOP VIEW

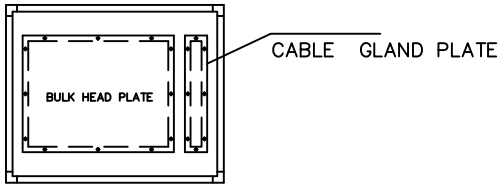

BOTTOM VIEW

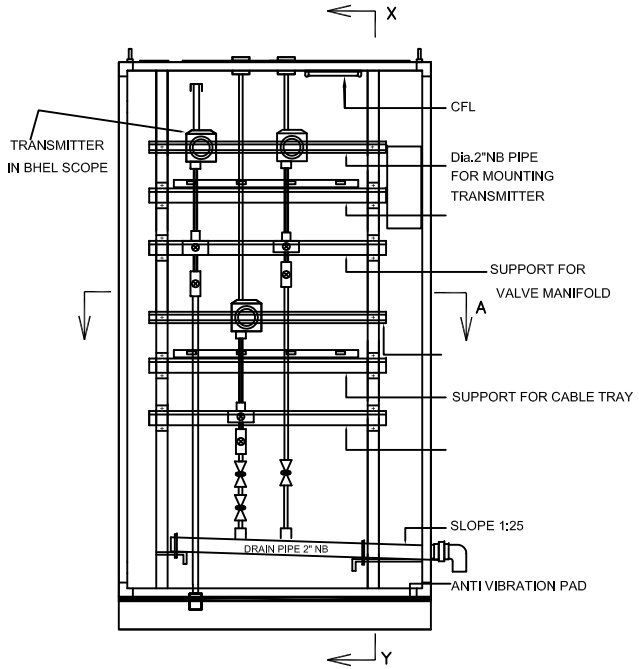

FRONT VIEW

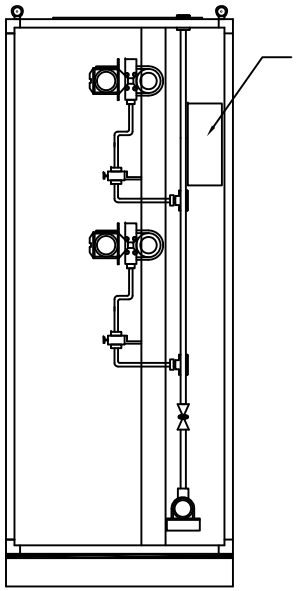

SIDE VIEW FROM X–Y

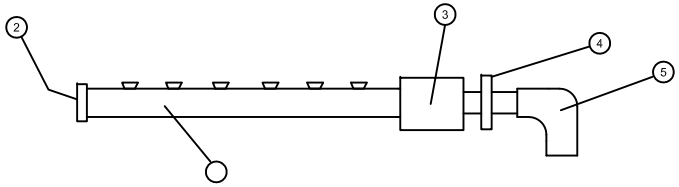

DRAIN PIPE

ITEM	DESCRIPTION	QTY.
1	2" NB ASTM A-106' SCH80/GR-C	A/R
2	2" S.W.CAP,CS ASTM A105	1No.
3	2" NBSW X 1" NPT(F) COUPLING CS ASTM A105	1No.
4	1" NPT (M) X1" BSP(M) HEX. COUPLING, CS ASTM105	1No.
5	1" BSP (F) ELBOW, CS ASTM A105	1No.

PROD / PROJ : –

CUSTOMER: –

REV.	DATE	ALTERED –	REV.	DATE	ALTERED –
–	–	CHECKED –	–	–	CHECKED –
		APPROVED –			APPROVED –

	NAME	SIGN	DATE
DRAWN	SAMY		14.09.2021
CHECKED	RKL		14.09.2021
APPROVED	RKL		14.09.2021

DEPT. BOP | CODE 416

BHARAT HEAVY ELECTRICALS LIMITED.
ELECTRONICS DIVISION, BANGALORE

TITLE: OGA–FOR–LIE

No. OF SHEETS: 04

SHEET No.: 03

WBS. No.: –

DRG. No.: CE/416/LIE/LIR/OGA2

REV: 00

REF. DRG. No. FLREF

SIGN. & DATE

INVENTORY No.

FORM No. A3–03

A3 SIZE

FIRST ANGLE PROJECTION

(ALL DIMENSIONS ARE IN mm)

DRG. No. CE/416/LIE/LIR/OGA2

COPYRIGHT AND CONFIDENTIAL
THE INFORMATION ON THIS DOCUMENT IS THE PROPERTY OF BHARAT HEAVY ELECTRICALS LTD. IT MUST NOT BE USED DIRECTLY OR INDIRECTLY IN ANY WAY DETRIMENTAL TO THE INTEREST OF THE COMPANY.

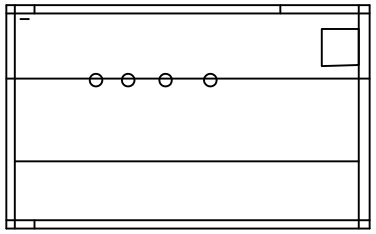

TOP VIEW

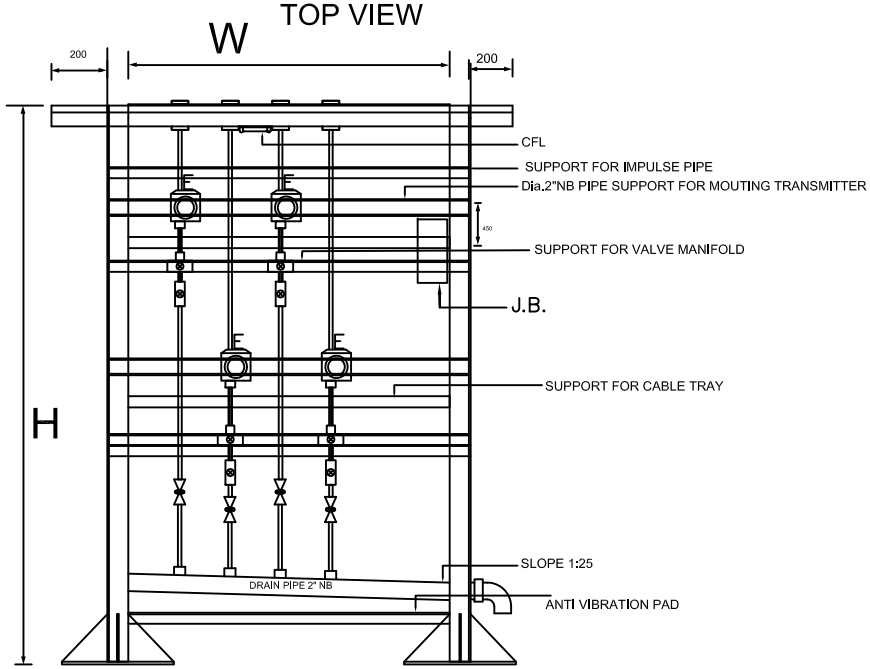

FRONT VIEW

NOTES:

1. JB TO BE LOCATED INSIDE THE LIR. JB DOOR SHALL OPEN FORM OUTSIDE.
2. LIR's ARE WITH 4 LEGS.
3. MINIMUM JB DIMENSION IS 800MM X 200MM X 200 MM.
4. SUPPORTING LEG SHALL BE MADE OF 6 MM THK ANGLE.
5. BULK HEAD PLATE SHALL BE PROVIDED AT THE TOP
6. TERMINAL SHALL BE PROVIDED IN SIDE THE J.B. AS PER TRANSMITTER GROUPING
7. GASKET SHALL BE PROVIDED BETWEEN BULK HEAD PLATE & RACK
8. EARTH BUS BAR 25x6mm COPPER SHALL BE USED
9. 1 No LED 11W,230V AC WITH FIXTURE SHALL BE PROVIDED
10. POWER SOCKET SHALL BE PROVIDED IN J.B. OF RACK
11. CANPAY ASSEMBLY WITH 3MM THICK CRCA SHEET

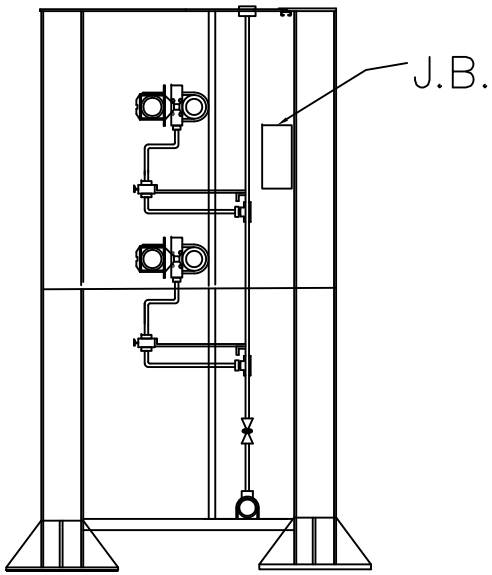

SIDE VIEW

LIR TYPE	H	W	D
A	2200	1650	800
B	2200	1330	800
C	2200	1010	800

PROD / PROJ : –

CUSTOMER: –

REV.	DATE	ALTERED –	REV.	DATE	ALTERED –
–	–	CHECKED –	–	–	CHECKED –
		APPROVED –			APPROVED –

	NAME	SIGN	DATE
DRAWN	SAMY		14.09.2021
CHECKED	RKL		14.09.2021
APPROVED	RKL		14.09.2021

DEPT. BOP | CODE 416

BHARAT HEAVY ELECTRICALS LIMITED.
ELECTRONICS DIVISION, BANGALORE

TITLE: OGA–FOR–LIR

No. OF SHEETS 04

SHEET No. 04

WBS. No. –

DRG. No. CE/416/LIE/LIR/OGA2

REV 00

REF. DRG. No. FLREF

SIGN. & DATE

INVENTORY No.

FORM No. A3–03

A3 SIZE

PROJECT: RATE CONTRACT FOR LIE/LIR

CUSTOMER: M/s NTPC

CONSULTANT: M/s NTPC

COPY RIGHT AND CONFIDENTIAL

THE INFORMATION ON THIS DOCUMENT IS THE PROPERTY OF BHARAT HEAVY ELECTRICALS LIMITED. IT MUST NOT BE USED DIRECTLY OR INDIRECTLY IN ANY WAY DETRIMENTAL TO THE INTEREST OF THE COMPANY.

COMPONENT VENDOR LIST

REVISIONS :	APPROVED BY		
	DIPTENDU GHOSH		
	PREPARED BY	ISSUED	DATE
	RAJESH LINGUTLA	416	09/07/24

COPY RIGHT AND CONFIDENTIAL
THE INFORMATION ON THIS DOCUMENT IS THE PROPERTY OF BHARAT HEAVY ELECTRICALS LIMITED . IT MUST NOT BE USED DIRECTLY OR INDIRECTLY IN ANY WAY DETRIMENTAL TO THE INTEREST OF THE COMPANY.

SUB COMPONENT VENDOR LIST

Sl No	Item Description	Approved Vendors
1	Socket Weld Fittings	PRECISION ENGG INDUSTRIES, MUMBAI
		V.K.INDUSTRIES,BANGALORE
		VIKAS INDUSTRIAL PRODUCTS,NOIDA
		EXCEL HYDRO-PNEUMATICS PVT LTD,MUMBAI
		METPRESS ENGINEERING WORKS,KOLKATA
		BALDOTA VALVE AND FITTINGS PVT LTD,MUMBAI
		PMT ENGINEERS,AHMEDABAD
		FLOWTECH, KOLKATA.
		PANAM ENGINEERS LTD,MUMBAI
		AURA INC,NEW DELHI
		PAUL INDUSTRIES,HOWRAH
		ARCELLOR CONTROLS ,AHMEDABAD
		HP VALVES & FITTINGS (INDIA) PVT. LTD,CHENNAI
		NAV DURGA FORGING AND FITTINGS PVT LTD, THANE, MAHARASTRA.
		PRIME ENGINEERS,MUMBAI
		DYNA FLUID VALVES AND FLOW CONTROLS,UDYAMBAG,BELGAUM
		ARYA CRAFTS & ENGINEERING PVT. LTD,MUMBAI
2	Compression Fitting	PRECISION ENGG INDUSTRIES, MUMBAI
		EXCEL HYDRO-PNEUMATICS PVT LTD, MUMBAI
		METPRESS ENGINEERING WORKS, KOLKATA
		ASTEC VALVE & FITTINGS PVT. LTD., MUMBAI
		FLUID CONTROLS PVT. LTD,PUNE
		PANAM ENGINEERS LTD,MUMBAI
		AURA INC, NEW DELHI
		HP VALVES & FITTINGS (INDIA) PVT. LTD, CHENNAI
		PMT ENGINEERS,AHMEDABAD
		PRIME ENGINEERS,MUMBAI
		ARCELLOR CONTROLS ,AHMEDABAD
		ARYA CRAFTS & ENGINEERING PVT. LTD,MUMBAI
		SWAGELOCK,USA
		DYNA FLUID VALVES AND FLOW CONTROLS,UDYAMBAG,BELGAUM
		FLOWTECH. KOLKATA.
		PARKER HANNIFIN INDIA PVT. LTD.,CHENGAL PATTU,TAMILANADU
		FLUID FIT ENGINEERING PVT LTD, PALGHAR, MAHARASHTRA.
3	Instrument Valves	BHARAT HEAVY ELECTRICALS LIMITED VALVES DIVISION,TIRUCHIRAPALLI,TAMILANADU.
		PRECISION ENGG INDUSTRIES, MUMBAI
		EXCEL HYDRO-PNEUMATICS PVT LTD,MUMBAI
		METPRESS ENGINEERING WORKS,KOLKATA
		BALDOTA VALVE AND FITTINGS PVT LTD,MUMBAI
		PMT ENGINEERS,AHMEDABAD
		AURA INC,NEW DELHI
		HP VALVES & FITTINGS (INDIA) PVT. LTD,CHENNAI
		FLUID CONTROLS PVT LTD,PUNE
		FLOWTECH,KOLKATA.
		DYNA FLUID VALVES AND FLOW CONTROLS,UDYAMBAG,BELGAUM
		INSTRUMENTATION LIMITED,PALGHAT
		BHARAT HEAVY ELECTRICALS LIMITED VALVES DIVISION,TIRUCHIRAPALLI,TAMILANADU.
4	Air Filter Regulator	PLACKA INSTRUMENTS INDIA PVT LTD CHENNAI
		FESTO, BANGALORE
		EMERSON (ASCO) CHENNAI
		FAIRCHILD USA
		SMC PNEUMATICS NOIDA
		SHAVO NORGEN, MUMBAI

COPY RIGHT AND CONFIDENTIAL
THE INFORMATION ON THIS DOCUMENT IS THE PROPERTY OF BHARAT HEAVY ELECTRICALS LIMITED . IT MUST NOT BE USED DIRECTLY OR INDIRECTLY IN ANY WAY DETRIMENTAL TO THE INTEREST OF THE COMPANY.

SUB COMPONENT VENDOR LIST

Sl No	Item Description	Approved Vendors
5	Valve Manifolds	PRECISION ENGG INDUSTRIES, MUMBAI
		EXCEL HYDRO-PNEUMATICS PVT LTD,MUMBAI
		METPRESS ENGINEERING WORKS,KOLKATA
		BALDOTA VALVE AND FITTINGS PVT LTD,MUMBAI
		ASTEC VALVE & FITTINGS PVT. LTD,MUMBAI
		FLOWTECH,KOLKATA.
		AURA INC,NEW DELHI
		PMT ENGINEERS,AHMEDABAD
		HP VALVES & FITTINGS (INDIA) PVT. LTD,CHENNAI
		MICRO PRECISION PRODUCTS PVT LTD,FARIDABAD,HARYANA.
		FLUID CONTROLS LIMITED ,PUNE
		ARCELLOR CONTROLS,AHMEDABAD.
		PRIME ENGINEERS,MUMBAI
		Parker HANNIFIN INDIA PVT. LTD,LEBANON (D407131-Super technical dealer for Parker)
		VIPAL ENTEPRISES PVT LTD,MUMBAI.
		DYNA FLUID VALVES AND FLOW CONTROLS,UDYAMBAG,BELGAUM
		ARYA CRAFTS & ENGINEERING PVT. LTD,MUMBAI
		SHREE MARUTI INSTRUMENTS PVT LTD, GUJARAT.
		FLUID FIT ENGINEERING PVT LTD, PALGHAR, MAHARASHTRA.
6	Impulse Pipes / Seamless Tube	BHARAT HEAVY ELECTRICALS LTD, TRICHY
		Mahrastra Seamless, Raigarh (CS Pipes Only)
		HEAVY MEATAL TUBES, AHMADABAD (only for CS Pipes & SS Pipes &Tubes)
		RATNAMANI METALS & TUBES LTD, AHMADABAD(only for SS Pipes &Tubes)
		NIPPON STEEL & SUMITOMO METALS CORPORATION ,JAPAN
		TPS TECHNITUBE ROHREN WERKE GMBH, GERMANY
		ISMT, Ahamadnagar (CS Pipes Only and AS P22 Only)
		SANDVIK, SWEDEN. (only for SS Pipes &Tubes)
		VELURIC & MANNESMANN, GERMANY.
7	Instrument cables	POLYCAB ,DAMAN
		GOYELEN FIBERS INDIA PVT LTD, SILVASSA.
		TEMPSENS INDIA PVT LTD, UDAIPUR.
		PARAMOUNT, KHUSKHERA
		HAVELS INDIA, ALWAR.
		CORDS, BHIWADI
		CORDS, KAHARANI
		KEI, BHIWADI
		CMI, FARIDABAD
		ADVANCE CABLES PVT LTD, BENGALURU.
		GEMS CAB INDUSTRIES LTD, BHIWADI.
		APAR INDUSTRIES LTD, VALSAD.
		SUYOG ELECTRICALS LTD, HALOL(GUJARAT).
		SPECIAL CABLES PVT LTD, RUDRAPUR.
		TCC COMMUNIATION, GHAZIABAD.
		KERPEN CABLES, GERMANY
		DELTON, FARIDABAD
		UNIVERSAL CABLE, SATNA.
		NICCO, KOLKATA.
		TEW & C, USA.
		HABIA CABLES, SWEDEN.
		LAPP CABLES, GERMANY.
		ELKAY TELE LINKS, FARIDABAD.
		THERMO ELECTR BV, NETHERLAND.
		GUPTA POWER INFRASTRUCTURE LTD, KHURDHA.
		THERMOCABLES LTD,HYDERBAD/MAHBOOB NAGAR

Note: Bidders can propose additional sub component vendors for above items by filling NTPC Sub Vendor questionnaire format (which is the part of this specifications), Final sub component vendor list will be decided by Customer during detailed engineering. However, if same is not approved by customer, vendors to provide sub component makes from the approved list without any price impact.

PROJECT: RATE CONTRACT FOR LIE/LIR

CUSTOMER: M/s NTPC

CONSULTANT: M/s NTPC

TYPICAL QUALITY CHECK LIST

COPY RIGHT AND CONFIDENTIAL

THE INFORMATION ON THIS DOCUMENT IS THE PROPERTY OF BHARAT HEAVY ELECTRICALS LIMITED. IT MUST NOT BE USED DIRECTLY OR INDIRECTLY IN ANY WAY DETRIMENTAL TO THE INTEREST OF THE COMPANY.

REVISIONS :	APPROVED BY		
	DIPTENDU GHOSH		
	PREPARED BY	ISSUED	DATE
	RAJESH LINGUTLA	416	09/07/24

	MANUFACTURER'S NAME & ADDRESS	MANUFACTURING QUALITY PLAN	
		ITEM : LOCAL INSTRUMENT ENCLOSURE & LOCAL INSTRUMENT RACK	QP Ref NO.: CE/416/LIE-LIR/QP REV. : 00 DT. :09.07.2024 PAGE : 02 OF 06

S. NO.	COMPONENTS & OPERATIONS	CHARACTERISTICS	CLASS	TYPE OF CHECK	QUANTUM OF CHECK	REFERENCE DOCUMENT	ACCEPTANCE NORMS	FORMAT OF RECORD	AGENCY D*	M	C	E	REMARKS
1	2	3	4	5	6	7	8	9		**10			11
(A)	***MATERIAL***												
1	CRCA SHEET	A) MATERIAL	MAJOR	CHEMICAL COMPOSITION	SAMPLE	IS-513 APP.DRG	IS-513	M.T.C./Q.A.REP.		V	V	V	
		B) THICKNESS	MAJOR	MEASUREMENT	100%	APP.DRG	APP.DRG	M.T.C./Q.A.REP.		P	V	V	
		C) HARDNESS	MAJOR	STRENGTH	SAMPLE	IS-513	IS-513	M.T.C./Q.A.REP.		V	V	V	
		D) SURFACE FINISH	MAJOR	VISUAL	100%	IS-513	IS-513	M.T.C./Q.A.REP.		P	V	V	
2	MS C- CHANNELS / MS ANGLE	A) DIMENSION	MAJOR	VISUAL	100%	APP.DRG/ F.S.	APP.DRG/ F.S.	M.T.C./Q.A.REP.		P	V	V	
		B) SURFACE DEFECTS	MAJOR	VISUAL	100%	APP.DRG/ F.S.	APP.DRG/ F.S.	M.T.C./Q.A.REP.		V	V	V	
		C) STRAIGHTNESS	MAJOR	MESUERMENT	100%	APP.DRG/ F.S.	APP.DRG/ F.S.	M.T.C./Q.A.REP.		V	V	V	
3	GASKET	A) DIMENSION	MAJOR	MEASUREMENT	SAMPLE	APP.DRG/ F.S.	APP.DRG/ F.S.	M.T.C./Q.A.REP.		P	V	V	
		B) HARDNESS/SHORE HARDNESS	MAJOR	MEASUREMENT	SAMPLE	APP.DRG/ F.S.	APP.DRG/ F.S.	M.T.C.		V	V	V	
4	TERMINALS	A) TYPE, SIZE & MAKE	MAJOR	VISUAL	100%	APP.DRG	APP.DRG	M.T.C./Q.A.REP.		P	V	V	

		LEGEND : * RECORDS, INDENTIFIED WITH `TICK' SHALL BE ESSENTIALLY INCLUDED BY CONTRACTOR IN QA DOCUMENTATION. ** M : MANUFACTURER/ SUBCONTRACTOR C: CONTRACTOR/ NOMINATED INSPECTION AGENCY E : END USER INDICATE `P' PERFORM, `W' WITNESS AND `V' VERIFICATION AS APPROPRIATE "CHP" END USER SHALL IDENTIFIED IN COLUMN `E'	FOR END USER :	DOC. NO.
MANUFACTURER /SUBCONTRACTOR	CONTRACTOR			
SIGNATURE			REVIEWED BY	NAME & SIGN OFAPPROVING AUTHORITY WITH SEAL

	MANUFACTURER'S NAME & ADDRESS	MANUFACTURING QUALITY PLAN	
		ITEM : LOCAL INSTRUMENT ENCLOSURE & LOCAL INSTRUMENT RACK	QP Ref NO.: CE/416/LIE-LIR/QP REV. : 00 DT. : 09.07.2024 PAGE : 03 OF 06

S. NO.	COMPONENTS & OPERATIONS	CHARACTERISTICS	CLASS	TYPE OF CHECK	QUANTUM OF CHECK	REFERENCE DOCUMENT	ACCEPTANCE NORMS	RECORD		M	C	E	REMARKS
1	2	3	4	5	6	7	8	9	D*		**10		11
5	PVC WIRE/ CABLE	A) TYPE, SIZE, MAKE	MAJOR	MEASUREMENT	SAMPLE	IS 694/APPD. APP.DRG	IS 694/APPD. APP.DRG	M.T.C./Q.A.REP.		P	V	V	
6	PAINT	A) SHADE	MAJOR	VISUAL	SAMPLE	APP. DRG	APP. DRG	M.T.C./Q.A.REP.		P	V	V	
		B) FINISH	MAJOR	VISUAL	SAMPLE	APP. DRG	APP. DRG	M.T.C./Q.A.REP.		P	V	V	
7	FLEXIBLE CONDUIT / M.S. CABLE TRAY	A) TYPE, SIZE & MAKE	MAJOR	VISUAL	SAMPLE	APP.DRG	APP.DRG	M.T.C./Q.A.REP.		P	V	V	
(B)	***COMPONENTS ****												* TYPE / MODEL /RANGE OF COMPONENTS AS PER BOM OF LIE/ LIR .
1	VALVES, MANIFOLDS	MECHANICAL	MAJOR	A)CHEM. TEST	SAMPLE	SUPPLIER CAT./ APP.DRG	SUPPLIER CAT./ APP.DRG	M.T.C./Q.A.REP.		V	V	V	
				B)FUNCTIONAL	100%	-DO-	-DO-	M.T.C./Q.A.REP.		P	V	V	
				C) DIMENSION	100%/SAM.	-DO-	-DO-	M.T.C./Q.A.REP.		P	V	V	
				D)HYDROSTA-TIC	10%	-DO-	-DO-	M.T.C./Q.A.REP.		V	V	V	
2	FITTINGS	MECHANICAL	MAJOR	A)CHEM. TEST	SAMPLE	-DO-	-DO-	M.T.C./Q.A.REP.		V	V	V	
				B) DIMENSION	100%/SAM.	-DO-	-DO-	M.T.C./Q.A.REP.		P	V	V	
				C)HYDROSTA-TIC	10%	-DO-	-DO-	M.T.C./Q.A.REP.		V	V	V	
3.a	PIPES	MECHANICAL	MAJOR	A)CHEM. & PHY. TEST	SAMPLE	-DO-	-DO-	M.T.C./Q.A.REP. M.T.C./Q.A.REP.		V	V	V	
				B) DIMENSION	100%/ SAM.	-DO-	-DO-	M.T.C./Q.A.REP.		P	V	V	

		LEGEND : * RECORDS, INDENTIFIED WITH `TICK' SHALL BE ESSENTIALLY INCLUDED BY CONTRACTOR IN QA DOCUMENTATION. ** M : MANUFACTURER/ SUBCONTRACTOR C: CONTRACTOR/ NOMINATED INSPECTION AGENCY E : END USER INDICATE `P' PERFORM, `W' WITNESS AND `V' VERIFICATION AS APPROPRIATE "CHP" END USER SHALL IDENTIFIED IN COLUMN `E'	FOR END USER :	DOC. NO.
MANUFACTURER /SUBCONTRACTOR	CONTRACTOR			
SIGNATURE			REVIEWED BY	NAME & SIGN OFAPPROVING AUTHORITY WITH SEAL

MANUFACTURER'S NAME & ADDRESS	MANUFACTURING QUALITY PLAN	
	ITEM : LOCAL INSTRUMENT ENCLOSURE & LOCAL INSTRUMENT RACK	QP Ref NO.: CE/416/LIE-LIR/QP REV. : 00 DT. : 09.07.2024 PAGE : 04 OF 06

S. NO.	COMPONENTS & OPERATIONS	CHARACTERISTICS	CLASS	TYPE OF CHECK	QUANTUM OF CHECK	REFERENCE DOCUMENT	ACCEPTANCE NORMS	RECORD	D*	M	C	E	REMARKS
1	2	3	4	5	6	7	8	9		**10			11
3.b	TUBES	MECHANICAL	MAJOR	A)CHEM. & PHY. TEST	SAMPLE	SUPPLIER CAT./ APP.DRG	SUPPLIER CAT./ APP.DRG	M.T.C./Q.A.REP.		V	V	V	
				B) DIMENSION	100%	-DO-	-DO-	M.T.C./Q.A.REP.		P	V	V	
				C) HYDROSTA-TIC	10%	-DO-	-DO-	M.T.C./Q.A.REP.		P	V	V	
(C)	**INPROCESS**												
1	FABRICATED/CUBICLE AND COMPONENTS	A) DIMENSION	CRITICAL	MEASUREMENT	100%	APP.DRG	APP.DRG	Q.A. REPORT		P	V	V	
		B) LIFTING FACILITY	CRITICAL	VISUAL	100%	APP.DRG	APP.DRG	Q.A. REPORT		P	V	V	
		C) CABLE ENTRY	CRITICAL	VISUAL	100%	APP.DRG	APP. APP.DRG	Q.A. REPORT		P	V	V	
		D) STRAIGHTNESS / WAVINESS	CRITICAL	VISUAL	100%					P	V	V	
		E) GASKET ARGMNT.	CRITICAL	VISUAL	100%	APP.DRG	APP.DRG	Q.A. REPORT		P	V	V	
		F) DEBURRING	CRITICAL	VISUAL	100%	APP.DRG	APP.DRG	Q.A. REPORT		P	V	V	
		G) WELDING	CRITICAL	VISUAL	100%	APP.DRG	APP.DRG	Q.A. REPORT		P	V	V	
		H) REMOVAL OF WELDING SLAGS	CRITICAL	VISUAL	100%	APP.DRG	APP.DRG	Q.A. REPORT		P	V	V	

		LEGEND : * RECORDS, INDENTIFIED WITH `TICK' SHALL BE ESSENTIALLY INCLUDED BY CONTRACTOR IN QA DOCUMENTATION. ** M : MANUFACTURER/ SUBCONTRACTOR C: CONTRACTOR/ NOMINATED INSPECTION AGENCY E : END USER INDICATE `P' PERFORM, `W' WITNESS AND `V' VERIFICATION AS APPROPRIATE "CHP" END USER SHALL IDENTIFIED IN COLUMN `E'	FOR END USER :
MANUFACTURER /SUBCONTRACTOR	CONTRACTOR		
SIGNATURE			REVIEWED BY

DOC. NO.

NAME & SIGN OFAPPROVING AUTHORITY WITH SEAL

	MANUFACTURER'S NAME & ADDRESS	MANUFACTURING QUALITY PLAN	
		ITEM : LOCAL INSTRUMENT ENCLOSURE & LOCAL INSTRUMENT RACK	QP Ref NO.: CE/416/LIE-LIR/QP REV. : 00 DT. : 09.07.2024 PAGE : 05 OF 06

S. NO.	COMPONENTS & OPERATIONS	CHARACTERISTICS	CLASS	TYPE OF CHECK	QUANTUM OF CHECK	REFERENCE DOCUMENT	ACCEPTANCE NORMS	FORMAT OF RECORD		AGENCY M	C	E	REMARKS
1	2	3	4	5	6	7	8	9	D*	**10			11
2	PRETREATMENT (7 TANK PROCESS)	A) DEGREASING	CRITICAL	VISUAL	100%	IS- 6005/F.S.	IS- 6005/F.S.	Q.A. REPORT		P	V	V	
		B) DERUSTING	CRITICAL	VISUAL	100%	IS- 6005/F.S.	IS- 6005/F.S.	Q.A. REPORT		P	V	V	
		C) PHOSPHATISING	CRITICAL	MEASUREMENT	100%	IS- 6005/F.S.	IS- 6005/F.S.	Q.A. REPORT		P	V	V	
		D) PASSIVATION	CRITICAL	VISUAL	100%	IS- 6005/F.S.	IS- 6005/F.S.	Q.A. REPORT		P	V	V	
3	SURFACE PREPARA- -TION & PAINTING	A) PRIMER(2 COATS)	CRITICAL	VISUAL	100%	APP.DRG	APP.DRG	Q.A.REPORT		P	V	V	
		B) SURFACER	CRITICAL	VISUAL	100%	APP.DRG	APP.DRG	Q.A.REPORT		P	V	V	
		C) FINAL PAINTING	CRITICAL	VISUAL	100%	APP.DRG	APP.DRG	Q.A.REPORT		P	V	V	
		D) THICKNESS	CRITICAL	MEASUREMENT	SAMPLE	APP.DRG	APP.DRG	Q.A.REPORT		P	V	V	
4	ELECTRICAL & MECH.	A) CHECK ARRANGE / LAYOUT OF COMP. & MOUNTING	CRITICAL	VISUAL	100%	APP.DRG	APP.DRG	Q.A.REPORT		P	V	V	
		B) WIRE CLAMPING & FERULING	CRITICAL	VISUAL	100%	APP.DRG	APP.DRG	Q.A.REPORT		P	V	V	
		C) INTERCONNECTION B/W COMPONENT	CRITICAL	VISUAL	100%	APP.DRG	APP.DRG	Q.A.REPORT		P	V	V	
		D)LUG SIZE&CRIMPING	CRITICAL	VISUAL	100%	APPD. APP.DRG	F.S./APP.DRG	Q.A.REPORT		P	V	V	
		E) COMPONENT IDENTIFICATION	CRITICAL	VISUAL	100%	APPD. APP.DRG	APP.DRG	Q.A.REPORT		P	V	V	
		F) WIRE SIZE	MAJOR	VISUAL	SAMPLE	IS-694 / APP.DRG	IS-694 / APP.DRG	M.T.C./QA REP.		P	V	V	
		G) NAME PLATES	CRITICAL	VISUAL	100%	APP.DRG	APP.DRG	Q.A.REPORT		P	V	V	
		H) PIPING	MAJOR	VISUAL	100%	APP.DRG	APP.DRG	Q.A.REPORT		P	V	V	

		LEGEND :	FOR END USER :	DOC. NO.
		* RECORDS, INDENTIFIED WITH `TICK' SHALL BE ESSENTIALLY INCLUDED BY CONTRACTOR IN QA DOCUMENTATION.		
		** M : MANUFACTURER/ SUBCONTRACTOR		
MANUFACTURER /SUBCONTRACTOR	CONTRACTOR	C: CONTRACTOR/ NOMINATED INSPECTION AGENCY E : END USER INDICATE `P' PERFORM, `W' WITNESS AND `V' VERIFICATION		
SIGNATURE		AS APPROPRIATE "CHP" END USER SHALL IDENTIFIED IN COLUMN `E'	REVIEWED BY	NAME & SIGN OFAPPROVING AUTHORITY WITH SEAL

MANUFACTURER'S NAME & ADDRESS	MANUFACTURING QUALITY PLAN	
	ITEM : LOCAL INSTRUMENT ENCLOSURE & LOCAL INSTRUMENT RACK	QP Ref NO.: CE/416/LIE-LIR/QP REV. : 00 DT. : 09.07.2024 PAGE : 06 OF 06

S. NO.	COMPONENTS & OPERATIONS	CHARACTERISTICS	CLASS	TYPE OF CHECK	QUANTUM OF CHECK	REFERENCE DOCUMENT	ACCEPTANCE NORMS	FORMAT OF RECORD		AGENCY M	C	E	REMARKS
1	2	3	4	5	6	7	8	9	D*	**10			11
D)	***FINAL INSPECTION***												
1	A) VERIFICATION OF COMPONENTS /RATING/ ARRANGEMENTS/ LOCATION FOR EASY ACCESSABILITY AND MAINTENANCE .		CRITICAL	VISUAL	100%/SAM.	APP.DRG	APP.DRG	Q.A. REPORT		P	W	W	
	B) COMPLETENESS OF WIRING ,TUBING/ PIPING		CRITICAL	VISUAL	100%/SAM.	APP.DRG	APP.DRG	Q.A. REPORT		P	W	W	
	C) TERMINAL ARRANGEMENTS,SPARE TER- -MINALS , EARTH BUS TIN PLATED COPPER)		CRITICAL	VISUAL	100%/SAM.	APP.DRG	APP.DRG	Q.A. REPORT		P	W	W	
	D) PAINT SHADE,THICKNESS & ADHESION		CRITICAL	MEASUREMENT	SAMPLE	APP.DRG	APP.DRG	Q.A. REPORT		P	W	W	
	E) DOOR ALIGNMENT		MAJOR	VISUAL	100%/SAM.	APP.DRG	APP.DRG	Q.A. REPORT		P	W	W	
	F) GENERAL APPEARENCE (STRAIGHTNESS, FREE FROM SCRATCHES, BENDS, DENTS AND SHEET THICKNESS)		MAJOR	VISUAL	100%/SAM.	APP.DRG	APP.DRG	Q.A. REPORT		P	W	W	
	G) HYDROSTATIC TEST FOR ASSEMBLY. (1.5 TIMES RATED PRESSURE)		CRITICAL	MECHANICAL	100%	APP.DRG	APP.DRG/ NO LEAK/ PRESSURE DROP	Q.A. REPORT		P	W	W	PERFORMED BY VENDOR 100 % BHEL WITNESS ON 10%
	(PNEUMATIC TEST FOR PURGING LINES (NO LEAKAGED WITH SOAP SOLUTION)												
2	OVERALL FINISH		MAJOR	VISUAL	100%/SAM.	APP.DRG	APP.DRG	Q.A. REPORT		P	W	W	
3	CONTINUITY TEST		MAJOR	FUNCTIONAL	100%/SAM.	APP.DRG	APP.DRG	Q.A. REPORT		P	W	W	
4	IR TEST		MAJOR	MEASUREMENT	100%/SAM.	APP.DRG	APP.DRG	Q.A. REPORT		P	W	W	
5	HV TEST		MAJOR	MEASUREMENT	100%/SAM.	APP.DRG	APP.DRG	Q.A. REPORT		P	W	W	
6	FUNCTIONAL TEST		MAJOR	FUNCTIONAL	100%/SAM.	APP.DRG	APP.DRG	Q.A. REPORT		P	W	W	
7	IP TEST	TYPE TEST	MAJOR	VERIFICATION	100%/SAM.	APP.DRG	APP.DRG	Q.A. REPORT		P	V	V	

M. T.C. = MANUFACTURER'S / MATERIAL TEST CERTIFICATE
F.S. = FACTORY STANDARD
NOTE :- CUSTOMER / INSPECTION AGENCY / END USER MAY DO INSPECTION ON SAMPLE BASIS

Q.A.REP.= QUALITY ASSURANCE REPORT
APP. APP.DRG = APPROVED DRAWING
SAM. = SAMPLE

LEGEND :
* RECORDS, INDENTIFIED WITH `TICK' SHALL BE ESSENTIALLY INCLUDED BY CONTRACTOR IN QA DOCUMENTATION.
** M : MANUFACTURER/ SUBCONTRACTOR
C: CONTRACTOR/ NOMINATED INSPECTION AGENCY E : END USER
INDICATE `P' PERFORM, `W' WITNESS AND `V' VERIFICATION
AS APPROPRIATE "CHP" END USER SHALL IDENTIFIED IN COLUMN `E'

MANUFACTURER /SUBCONTRACTOR	CONTRACTOR	REVIEWED BY	NAME & SIGN OFAPPROVING AUTHORITY WITH SEAL
SIGNATURE			

PROJECT: RATE CONTRACT FOR LIE/LIR (NON –NTPC PROJECTS)

CUSTOMER: M/s TSGENCO, ADANI POWER

COPY RIGHT AND CONFIDENTIAL

THE INFORMATION ON THIS DOCUMENT IS THE PROPERTY OF BHARAT HEAVY ELECTRICALS LIMITED. IT MUST NOT BE USED DIRECTLY OR INDIRECTLY IN ANY WAY DETRIMENTAL TO THE INTEREST OF THE COMPANY.

TECHNICAL SPECIFICATION
FOR
LOCAL INSTRUMENT ENCLOSURE / RACKS
(LIE / LIR)

REVISIONS :	APPROVED BY		
	DIPTENDU GHOSH		
	PREPARED BY	ISSUED	DATE
	RAJESH LINGUTLA	416	09/07/24

COPY RIGHT AND CONFIDENTIAL

THE INFORMATION ON THIS DOCUMENT IS THE PROPERTY OF BHARAT HEAVY ELECTRICALS LIMITED . IT MUST NOT BE USED DIRECTLY OR INDIRECTLY IN ANY WAY DETRIMENTAL TO THE INTEREST OF THE COMPANY.

CONTENTS

SL NO	DESCRIPTION	REFERENCE NO
01	SCOPE OF SUPPLY	CE/416/NON-NTPC/RC/LIE-LIR/SOS REV. 00 ,SHEETS 03
02	TECHNICAL REQUIREMENTS	CE/416/ LIELIR/TR REV. 00, SHEETS 09
03	HOOKUP SCHEMES	CE/416/ NON-NTPC/RC/HUP REV. 00 ,SHEETS 33
04	DRAWINGS FOR LIE-LIR	CE/416/LIE/LIR/OGA1 SHEETS 04
05	VENDOR LIST FOR COMPONENTS	CE/416/ NON-NTPC/RC/LIE-LIR /VL REV. 00 , SHEETS 04
06	TYPICAL QUALITY CHECK LIST	CE/416/LIE-LIR/QP REV 00, SHEETS 06

PROJECT: RATE CONTRACT FOR LIE/LIR

CUSTOMER: M/s TSGENCO, ADANI POWER

COPY RIGHT AND CONFIDENTIAL

THE INFORMATION ON THIS DOCUMENT IS THE PROPERTY OF BHARAT HEAVY ELECTRICALS LIMITED. IT MUST NOT BE USED DIRECTLY OR INDIRECTLY IN ANY WAY DETRIMENTAL TO THE INTEREST OF THE COMPANY.

SCOPE OF SUPPLY
FOR
LOCAL INSTRUMENT ENCLOSURE / RACKS
(LIE / LIR)

REVISIONS :	APPROVED BY		
	DIPTENDU GHOSH		
	PREPARED BY	ISSUED	DATE
	RAJESH LINGUTLA	416	09/07/24

COPY RIGHT AND CONFIDENTIAL

THE INFORMATION ON THIS DOCUMENT IS THE PROPERTY OF BHARAT HEAVY ELECTRICALS LIMITED . IT MUST NOT BE USED DIRECTLY OR INDIRECTLY IN ANY WAY DETRIMENTAL TO THE INTEREST OF THE COMPANY.

Scope of supply

The Scope of supply is as per Technical requirements attached with this specification. Vendor shall quote for each line item of the Table A & B. The unit rate shall be valid until the completion of the contracts. For this purpose, vendors shall maintain MS Excel file indicating total Bill of materials Table A & B.

TABLE: A

S.NO	HUP Ref CE/416/NON-NTPC/RC/HUP	Material Code	Description	Total Quantity	Unit
1		PR0830000020	LIE TYPEA	110	NO
2		PR0830000038	LIE TYPE B	208	NO
3		PR0830000046	LIE TYPE C	110	NO
4		PR0830000291	LIR TYPE D	8	NO
5		PR0830000054	LIR TYPE A	70	NO
6		PR0830000062	LIR TYPE B	98	NO
7		PR0830000070	LIR TYPE C	200	NO
8	2	PR0830000089	Hook up PT/PS 9000 Steam and Water	200	NO
9	4	PR0830000097	Hook up DPT/FT/LT 9000 Steam and Water	80	NO
10	6	PR0830000402	HOOK UP SCHEME PT/PS 1/2" P22 6000CL	80	NO
11	8	PR0830000356	HOOK UP SCHEME DPT/DPS 1/2" P22 6000CL	48	NO
12	10	PR0830000100	Hook up PT/PS 6000 Steam and Water	80	NO
13	12	PR0830000119	HOOK UP DPT/FT/LT STEAM AND WATER A106 6K	120	NO
14	14	PR0830000127	Hook up PT/PS 3000 water	1040	NO
15	16	PR0830000135	Hook up DPT/DPS 3000 water	700	NO
16	18	PR0830000305	Hook up PT/PS 3000 Sea Water 1/2" SS 316L	80	NO
17	20	PR0830000216	Hook up DPT/DPS Sea water SS316 L	60	NO
18	22	PR0830000151	Hook up PT/PS Clean air Top entry 3/4"	16	NO
19	24	PR0830000143	Hook up PT/PS Clean Air service	700	NO
20	26	PR0830000194	Hook up DPT/FT/DPS Flue gas	460	NO
21	28	PR0830000186	Hook up PT/PS Flue gas - F22	60	NO
22	30	PR0830000208	Hook up DPT/FT/LT Flue gas -F22	40	NO
23	32	PR0830000003	Hook up for Air Purging	680	NO
24	32	PR0830000259	Hook up for Continuous Purging	1420	NO
25	32	PR0830000267	Hook up for Intermittent Purging	680	NO
26		PR0450000290	Temp. Transmitter Junction Box - Type A	60	NO
27		PR0450000303	Temp. Transmitter Junction Box - Type B	215	NO
28		PR0450000311	Temp. Transmitter Junction Box - Type C	515	NO
29		PR0900007443	Hardware for Loose Schemes as per Annexure	1	ST
30			IBR Charges	4	ST

Note:

1. Colour Exterior –RAL7032
2. Interior: Brilliant white Glossy finish two coats/RAL7035 with fire resistant paint. Paint thickness shall be 80 to 100 microns. Final color will be decided during detailed engineering.
3. IP-65 Type test shall be conducted for LIE and JB of LIR for the above project and to submitted for approval during document submission.
4. Please refer/correlate scope of supply w.r.t Technical specifications, Hook Up schemes and Drawings etc.
5. Tentative NTPC Project list enclosed here as Table: C.
6. Instrument schedule (Grouping document) will be provided during detailed engineering.
7. IBR Certification shall be provided for pipes and fittings, Valves, Tubes for Page Numbers 2, 4, 6, 8, 10,14,16,18 of Ref: CE/416/NON-NTPC/RC/HUP – Hook Up scheme.

COPY RIGHT AND CONFIDENTIAL
THE INFORMATION ON THIS DOCUMENT IS THE PROPERTY OF BHARAT HEAVY ELECTRICALS LIMITED . IT MUST NOT BE USED DIRECTLY OR INDIRECTLY IN ANY WAY DETRIMENTAL TO THE INTEREST OF THE COMPANY

HARDWARE LOOSE SCHEMES

TABLE: B-1/2

SL. NO.	ITEM DESCRIPTION	QUANTITY	UNIT	IBR/NON IBR
1	TWO VALVE MANIFOLD WITH VENT PLUG PORT SIZE:1/2" NPTF/MATL.SS316 PR.TESTING:9000 PSI	10	NO	IBR
2	TWO VALVE MANIFOLD WITH VENT PLUG PORT SIZE:1/2" NPTF/MATL.SS316 PR.TESTING:6000 PSI	10	NO	IBR
3	TWO VALVE MANIFOLD WITH VENT PLUG PORT SIZE:1/2"NPTF/BODY:SS316 PR.TESTING:3000PSI	10	NO	IBR
4	FIVE VALVE MANIFOLD WITH VENT PLUG PORT SIZE:1/2" NPTF/MATL.SS316 PR.TESTING:9000 PSI	10	NO	IBR
5	FIVE VALVE MANIFOLD WITH VENT PLUG PORT SIZE:1/2" NPTF/MATL.SS316 PR.TESTING:6000 PSI	10	NO	IBR
6	FIVE VALVE MANIFOLD WITH VENT PLUG PORT SIZE:1/2" NPTF/MATL.SS316 PR.TESTING:3000 PSI	10	NO	IBR
7	THREE VALVE MANIFOLD WITH VENT PLUG PORT SIZE:1/2"NPTF MATL:SS316 PR.TESTING:3000PSI	10	NO	IBR
8	FORGED GLOBE VALVE BODY:ASTM A182 F316H/STEM:ASTM A182 GR.F6A/SIZE:1/2"NB-SW/CL:3000SPL	20	NO	IBR
9	FORGED GLOBE VALVE BODY:ASTM A182-F22/STEM:ASTM A182 GR.F6A/ SIZE:1/2"NBSW/CL:3000SPL	20	NO	IBR
10	FORGED GLOBE VALVE BODY:ASTM A182-F22/STEM:ASTM A182 GR.F6A/ SIZE:1/2"NBSW/CL:2500SPL	20	NO	IBR
11	FORGED GLOBE VALVE BODY:ASTM A105/STEM:ASTM A182 GR.F6A SIZE:1/2"NBSW/CL:3000	20	NO	IBR
12	FORGED GLOBE VALVE BODY:ASTM A105/STEM:ASTM A182 GR.F6A SIZE:1/2"NB-SW/CL:800	30	NO	IBR
13	FORGED GLOBE VALVE BODY:ASTM A182 F91/STEM:ASTM A182 GR.F6A/SIZE:1/2"NB-SW/CL:3000SPL	20	NO	IBR
14	TUBE FITTING TYPE:DFDC MATL:SS316 SIZE:1/2"NPTM X TO SUIT 1/2"OD SS TUBE	150	NO	IBR
15	TEE-TUBE UNION MATL: SS316 SIZE : OD OF 1/2" NB PIPE X TO SUIT 1/2" OD SS TUBE	20	NO	IBR
16	TEE-TUBE UNION MATL: SS316 SIZE : OD OF 3/4" NB PIPE X TO SUIT 1/2" OD SS TUBE	20	NO	NON IBR
17	PURGE ROTAMETER PROCESS CONN:1/4"NPTF AS PER SPECIFICATION	5	NO	
18	AIR FILLTER REGULATOR PROCESS CONN:1/2"NPTF AS PER SPECIFICATION	5	NO	
19	Impulse Pipe Material: A335 P22 Size: 1/2" Sch 160	1000	M	IBR
20	Impulse Pipe Material: A106 Gr.C Size:1/2" NB Sch 80	2300	M	IBR
21	NIPPLE MAT: ASTM A335 P22 SIZE: 1/2" NB SCH XXS/LENGTH = 100 mm ONE END - 1/2" NTPM ,OTHER END : PLAINCAP/ ASTM A 182 F22-SIZE - 1/2" NPTF	30	NO	IBR
22	NIPPLE MAT: ASTM A106 Gr.B SIZE: 1/2" NB SCH 80 / LENGTH = 100 mm ONE END - 1/2" NTPM ,OTHER END : PLAIN CAP/ ASTM A 105 -SIZE - 1/2" NPTF	70	NO	IBR
23	NUT & TAIL FITTING + SS 304 WASHERS (02 NOS.) MAT: A 182 F22 / SIZE : ID= 6.5 mm / OD=19 mm NUT:3/4" BSPF	36	NO	IBR
24	ADAPTER MAT: ASTM A182 F22 1/2" NPTM X 3/4" BSPM	36	NO	IBR

Unit rate of each item for Mandatory Spare to be provided in the offer.

COPY RIGHT AND CONFIDENTIAL

THE INFORMATION ON THIS DOCUMENT IS THE PROPERTY OF BHARAT HEAVY ELECTRICALS LIMITED . IT MUST NOT BE USED DIRECTLY OR INDIRECTLY IN ANY WAY DETRIMENTAL TO THE INTEREST OF THE COMPANY.

HARDWARE LOOSE SCHEMES

TABLE: B-2/2

SL. NO.	ITEM DESCRIPTION	QUANTITY	UNIT	IBR/NON IBR
25	NUT & TAIL FITTING + SS 304 WASHERS (02 NOS.) MAT: A 105 / SIZE : ID=7 mm / OD=13 mm NUT: 1/2" BSPF	100	NO	IBR
26	FORGED ADAPTER MAT: ASTM A105 1/2" NPTM X 1/2" BSPM CL - 3000 AS PER ANSI B 16.11	100	NO	IBR
27	Syphon Mat: ASTM A335 P22 1/2" NB-SCHXXS Connection: 1/2" NB-SW / Pr. Testing: 9000PSI	6	NO	IBR
28	SYPHON MAT: ASTM A106 Gr.B 1/2" NB SCH 80 CONNECTION: 1/2" NB-SW /PR.TESTING: 3000 PSI	22	NO	IBR
29	MS Channel 100 x 50 x 5 mm Thk.	1000	KG	
30	MS equal angle 50 x 50 x 6 mm Thk.	1500	KG	
31	MS Plate 10mm thick	350	KG	
32	HR Sheet 2.5mm Thick	250	KG	
33	PIPE A106 GRB 2" NB SCH 40	10	M	
34	U CLAMP - TO SUIT 1/2" NB PIPE WITH NUTS AND WASHERS MAT: CS, GALVANISED TO 10/15 MICRONS	4300	NO	
35	Funnel As per drawing ref:CE/416/FUNNEL	30	NO	
36	FORGED COUPLING / AS PER ANSI B16.11/MATERIAL: ASTM A182 F22/SIZE: 1/2" NB-SW / CLASS-6000	300	NO	IBR
37	FORGED COUPLING / AS PER ANSI B16.11/MATERIAL: ASTM A105 /SIZE: 1/2" NB-SW / CLASS-3000	580	NO	IBR
38	FORGED REDUCER / AS PER ANSI B16.11/MATERIAL: ASTM A182 F22/SIZE: OD OF 1" NB TO 1/2" NB-SW / CLASS-6000 LBS/LENGTH = 100mm	44	NO	IBR
39	FORGED REDUCER / AS PER ANSI B16.11/MATERIAL: ASTM A105/SIZE: OD OF 1" NB x 1/2" NB-SW / CLASS-3000/LENGTH = 100mm	66	NO	IBR
40	CONDENSATE POT/MATERIAL: ASTM A182 F22/ Instrument / Process connection: 1/2" NB-SW, Vent connection 1/2" NPTF with matching plug/SIZE: 88.90 OD X 12 mm Thick/Total length 350mm (Minimum)/All other dimensions as per ASME/IBR certificate required.	10	NO	IBR
41	CONDENSATE POT/MATERIAL: ASTM A182 F22/ Instrument / Process connection: 1/2" NB-SW, Vent connection 1/2" NPTF with matching plug/SIZE: 88.90 OD X 7.6 mm Thick/Total length 350mm (Minimum)/All other dimensions as per ASME/IBR certificate required.	30	NO	IBR
42	MALE CONNECTOR TUBE FITTING TYPE:DFDC MATL:SS316 SIZE:1/4"NPTM X TO SUIT 8mm "OD SS TUBE	30	NOS	IBR
43	ADAPTER MATL:SS316 SIZE:1/4"OD NB X TO SUIT 8mm "OD SS TUBE	10	NOS	IBR
44	FORGED EQUAL TEE / AS PER ANSI B16.11 SIZE:1/2" NB-SW / CL:6000 MATL:ASTM A182-F22	4	NOS	IBR
45	FORGED EQUAL TEE / AS PER ANSI B16.11 SIZE:1/2" NB-SW / CL:3000 MATL:ASTM A105	8	NOS	IBR
46	Bulk Head Union Material:Brass Size:1/4"NPTF	70	NOS	
47	Copper Tube in Coils-light brown Tempered:PVC Coated As per ASTM B 75 /: 1/4" OD X 1 MM Thick	200	NOS	
48	Brass Male Connector DFDC Size:1/4" to suit 1/4" Copper tube	200	NOS	

Unit rate of each item for Mandatory Spare to be provided in the offer.

Table: C

List of Tentative NON-NTPC Projects as below

S.No	NON-NTPC Project	Tentative Delivery Dates
1	TSGENCO Yadadri 5 X 800MW STPP FGD Package	30.03.2025.
2	TSGENCO Kothagudm FGD 1 X 800MW STPP	30.03.2025.
3	TSGENCO Bhadradri FGD 4 X 250MW STPP	30.03.2025.
4	MEL Adani Bhandura 2 x 800 MW STPP	Unit#1 - 30.06.2025, Unit#2 - 30.10.2025
5	Adani Raigarh 2 x 800 MW STPP	Unit#1 - 30.06.2025, Unit#2 - 30.10.2025

Project Wise tentative break up Quantity enclosed as Annexure-A.

COPY RIGHT AND CONFIDENTIAL

THE INFORMATION ON THIS DOCUMENT IS THE PROPERTY OF BHARAT HEAVY ELECTRICALS LIMITED . IT MUST NOT BE USED DIRECTLY OR INDIRECTLY IN ANY WAY DETRIMENTAL TO THE INTEREST OF THE COMPANY

Annexure-A

S.NO	HUP Ref CE/416/NON-NTPC/RC/HUP	Material Code	Description	Quantity for various Non-NTPC Projects					Total Quantity	Unit
				TSGENCO Yadadri 5 X 800MW STPP FGD Package	TSGENCO Kothagudm FGD 1 X 800MW STPP	TSGENCO Bhadradri FGD 4 X 250MW STPP	MEL Adani Bhandura 2 x 800 MW STPP	Adani Raigarh 2 x 800 MW STPP		
1		PR0830000020	LIE TYPEA	15	3	12	40	40	110	NO
2		PR0830000038	LIE TYPE B	20	4	16	84	84	208	NO
3		PR0830000046	LIE TYPE C	25	5	20	30	30	110	NO
4		PR0830000291	LIR TYPE D	0	0	0	4	4	8	NO
5		PR0830000054	LIR TYPE A	5	1	4	30	30	70	NO
6		PR0830000062	LIR TYPE B	15	3	12	34	34	98	NO
7		PR0830000070	LIR TYPE C	10	2	8	90	90	200	NO
8	2	PR0830000089	Hook up PT/PS 9000 Steam and Water	0	0	0	100	100	200	NO
9	4	PR0830000097	Hook up DPT/FT/LT 9000 Steam and Water	0	0	0	40	40	80	NO
10	6	PR0830000402	HOOK UP SCHEME PT/PS 1/2" P22 6000CL	0	0	0	40	40	80	NO
11	8	PR0830000356	HOOK UP SCHEME DPT/DPS 1/2" P22 6000CL	0	0	0	24	24	48	NO
12	10	PR0830000100	Hook up PT/PS 6000 Steam and Water	0	0	0	40	40	80	NO
13	12	PR0830000119	HOOK UP DPT/FT/LT STEAM AND WATER A106 6K	0	0	0	60	60	120	NO
14	14	PR0830000127	Hook up PT/PS 3000 water	100	40	80	410	410	1040	NO
15	16	PR0830000135	Hook up DPT/DPS 3000 water	70	30	60	270	270	700	NO
16	18	PR0830000305	Hook up PT/PS 3000 Sea Water 1/2" SS 316L	0	0	0	40	40	80	NO
17	20	PR0830000216	Hook up DPT/DPS Sea water SS316 L	0	0	0	30	30	60	NO
18	22	PR0830000151	Hook up PT/PS Clean air Top entry 3/4"	0	0	0	8	8	16	NO
19	24	PR0830000143	Hook up PT/PS Clean Air service	200	60	180	130	130	700	NO
20	26	PR0830000194	Hook up DPT/FT/DPS Flue gas	60	20	60	160	160	460	NO
21	28	PR0830000186	Hook up PT/PS Flue gas - F22	0	0	0	30	30	60	NO
22	30	PR0830000208	Hook up DPT/FT/LT Flue gas -F22	0	0	0	20	20	40	NO
23	32	PR0830000003	Hook up for Air Purging	220	80	180	100	100	680	NO
24	32	PR0830000259	Hook up for Continuous Purging	280	100	240	400	400	1420	NO
25	32	PR0830000267	Hook up for Intermittent Purging	220	80	180	100	100	680	NO
26		PR0450000290	Temp. Transmitter Junction Box - Type A	10	2	8	20	20	60	NO
27		PR0450000303	Temp. Transmitter Junction Box - Type B	75	20	60	30	30	215	NO
28		PR0450000311	Temp. Transmitter Junction Box - Type C	75	20	60	180	180	515	NO
29		PR0900007443	Hardware for Loose Schemes as per Annexure	0	0	0	1	0	1	NO
30			IBR Charges	0	0	0	2	2	4	ST

PROJECT: RATE CONTRACT FOR LIE/LIR

CUSTOMER: M/s TSGENCO, ADANI POWER

COPY RIGHT AND CONFIDENTIAL

THE INFORMATION ON THIS DOCUMENT IS THE PROPERTY OF BHARAT HEAVY ELECTRICALS LIMITED. IT MUST NOT BE USED DIRECTLY OR INDIRECTLY IN ANY WAY DETRIMENTAL TO THE INTEREST OF THE COMPANY.

TECHNICAL REQUIREMENT
FOR
LOCAL INSTRUMENT ENCLOSURE / RACKS
(LIE / LIR)

REVISIONS :	APPROVED BY		
	DIPTENDU GHOSH		
	PREPARED BY	ISSUED	DATE
	RAJESH LINGUTLA	416	09/07/24

TECHNICAL REQUIREMENTS FOR TRANSMITTER ENCLOSURES AND TRANSMITTER RACKS:

I. TRANSMITTER ENCLOSURES:

1. The Transmitter enclosures (Closed type) are provided for mounting Transmitters etc. and located in Boiler area. This shall be constructed of 3 mm thick CRCA material. These shall confirm to IP 65 protection class.

2. The Transmitter Enclosures shall be of following sizes (in millimeters).

   Type A - 1450(W) x 1000(D) x 2200(H) (For 5 to 6 Transmitters)
   Type B - 1100 (W) x 1000(D) x 2200(H) (Between 3 to 4 Transmitters)
   Type C - 800(W) x 1000(D) x 2200(H) (For 1 to 2 Transmitters)

3. These shall be reinforced as required to ensure true surfaces and to provide adequate Support for instruments and other equipment mounted therein. Double interlocking doors shall be provided and shall be arranged for maximum possible access to the module interior. Center posts or any member which would reduce access shall not be provided.

4. The doors shall be the three-point locking type constructed of not less than 3 mm steel sheet. Doors shall have concealed quick removal type pinned hinges and locking handles. Enclosure door locks shall accept the same / common key all over the plant. Neoprene material Gaskets shall be used between all mating sections to achieve dust proof enclosure rating for the modules and waterproof and dust tight rating on the Terminal / Junction boxes. All enclosures shall have access doors on Front and Rear sides.

5. Internal wirings between the Transmitters and Terminal / Junction box shall run through flexible dust tight conduits.

6. Anti Vibration Pads of minimum 15 mm thickness shall be provided for supporting each enclosure.

7. Construction of same shall be typically as per enclosed drawing CE/416/LIE/LIR/OGA1.

8. Service Power and Lighting

Each enclosure shall be provided with one receptacle, one light fixture & LED lamps with wire guard and one lighting switch and suitable 2P MCBs ,Six point 6/16A,240V AC Universal type power sockets with switch. Lighting switches may be doors actuated, mounted door. Light switches and receptacles shall be installed inside the enclosure on the wall near the latch side of the enclosure door. Light fixtures shall be installed on the ceilings of the enclosures. Power supplies for miscellaneous devices shall be provided with fuses located within the Enclosure JB. Fuses shall be mounted in fuse blocks. Fuse ratings will be given on electrical schematic diagrams. Power supply shall be 240 V AC.

9. Equipment Installation

a. Enclosures shall be provided to mount field instrument, equipment and accessories. Vendor shall prepare enclosures and piping drawings indicating the layout for each enclosure.

Special attention shall be given in the piping layout to avoid air traps in liquid filled piping, or water pockets in piping intended to be dry.

b. Drawings shall indicate the arrangement of all Piping, Valves and Fittings within the enclosures.

10. **Impulse Piping /Tubing**

a. Transmitter enclosures shall be complete with impulse tubing piping, valves from enclosure bulkhead connection to all instruments and necessary drain / blow down connections. The type, sizes, material and pressure class of pipes/tubes, fittings, valves etc. shall be suitable for the intended applications as per the Schemes / Tagging list of Instrument, provided by BHEL.

b. Bulkhead (Thickness shall be not less than 6mm) connection shall be used when instrument piping/ tubing enters the enclosure through Bulkhead plate. Typically through Bulk heads, Impulse pipe entry shall be through Top side of the Enclosure for Steam and Liquid services and for Air / flue gas services, impulse pipe entry shall be from Bottom side.

c. All Instrument Blow down lines, except those measuring vacuum shall be connected to a two-inch header, which is extended through one end of the enclosure and turned downward at other end.

d. Instrument piping and tubing shall be hydrostatically tested at one and one-half times the Design pressure (As per Instrument schedule) for that instruments except for vacuum measurement the test pressure will be 8 Kg / Cm2.

11. For Purging :

a. Pneumatic tubing shall be installed for all pneumatic devices, such as Air filter Regulator, Purge rotameters, Isolation valves, distribution air-header etc. Pneumatic tubing shall be installed in a neat workmanlike manner in protected locations with suitable supports. All Pipes / Tubes, which enter or leave the enclosure, shall be terminated on bulkhead fittings in the bulkhead plate. Pneumatic tubing material shall be ½" OD SS316 tubing Flareless SS- Tube fittings shall be used for tubing connections.

b. Instrument tubing schematic, connection and interconnections diagrams shall be furnished.

12. Wiring Within Enclosures and Grounding

Vendor shall furnish general arrangement and wiring diagrams for each transmitter Enclosures for approval.

13. **Enclosure Electrical Junction Box**

a. IP 65 junction box for the termination of all internal wiring shall be provided for each transmitter enclosure.

b. Junction boxes for enclosures shall be fabricated externally on one end of each enclosure assembly to accept field wiring through the top or bottom of the junction box. The

Junction box shall be 150 millimeters minimum depth. A hinged door shall give access to the interior of the junction box. Junction boxes shall be provided with LED Lamp lighting. Same key shall be used to lock both Junction box & enclosure.

II. OPEN TYPE TRANSMITTER RACKS:

1. Transmitter racks is provided for mounting transmitters and other accessories, in buildings and closed areas like the power house building / turbine hall.

2. The Transmitter Racks shall be of following sizes (in millimeters).

   Type D- 1600(W) x 650(D) x 2200(H) (For 7 to 8 Transmitters)
   Type A- 1400(W) x 650(D) x 2200(H) (For 5 to 7 Transmitters)
   Type B- 1100(W) x 650(D) x 2200(H) (Between 3 to 4 Transmitters)
   Type C- 800(W) x 650(D) x 1600(H) (For 1 to 2 transmitters)

3. Racks shall be constructed on structural members of adequate strength and rigidity to ensure proper support to the mounted instruments and equipment. Racks shall be of welded construction. Each rack shall be provided with a canopy to protect the instrument from dripping water or falling objects.

4. All Valves & Manifolds shall be securely mounted and the structural design shall be such that no item shall interfere with maintenance and removal of instrument, equipment and their accessories.

5. Construction of same shall be typically as per enclosed drawing CE/416/LIE/LIR/OGA1.

6. Service Power and Lighting

a. Each rack shall be provided with one receptacle, one light fixture with wire guard and one lighting switch,LED Lamp. Light fixtures shall be installed on the canopy of the rack.

b. Power supplies for miscellaneous devices shall be provided with fuses located within the rack JB. Fuses shall be mounted in fuse blocks. Fuse ratings will be given on electrical schematic diagrams. Power supply shall be 240 V AC.

7. Equipment Installation

Vendor shall prepare rack fabrication and piping drawings indicating the layout of each Rack. Transmitter/Instruments shall be installed using custom fabricated supports which are attached to the vertical members provided for this purpose. Drawings shall indicate the arrangement of all equipment, piping, valves and fittings within the rack and shall be subject to approval.

8. Impulse Piping / Tubing

a. Transmitter racks shall be complete with impulse tubing piping, valves from enclosure bulkhead connection to all instruments and necessary drain / blow down connections. The

type, sizes, material and pressure class of pipes/tubes, fittings, valves etc. shall be suitable for the intended applications as per the Schemes / Tagging list of Instrument, provided by BHEL.

b. Bulkhead (Thickness shall be not less than 6mm) connection shall be used when instrument piping/ tubing enters the enclosure through Bulkhead plate. Typically through Bulk heads, Impulse pipe entry shall be through top side of the Enclosure for Steam and Liquid services.

c. All Instrument Blow down lines, except those measuring vacuum shall be connected to a two-inch drain pipe header, which is extended through one end of the enclosure and turned downward for directing the blow down into drain.

d. Instrument piping and tubing shall be hydrostatically tested at one and one-half times the Design pressure (As per instrument schedule) for that instruments except for vacuum measurement the test pressure will be 8 Kg / Cm2.

9. <u>Wiring of the Racks</u>

a. A fully enclosed IP 65 type junction box shall be provided in each rack for housing the terminal blocks, power supply fuses and other electrical accessories, as required.

b. All electrical connections between instrument and the Terminals in Junction box shall be made. In addition all utility wiring for lighting and service power shall be installed.

c. Vendor shall furnish general arrangement and wiring diagrams for each transmitter rack for approval.

d. Junction boxes for the racks shall be mounted on one end of each assembly & should be inside the Rack to accept field wiring through the bottom of the junction box. The junction box shall be Minimum depth 200 mm. A Hinged door shall give access to the interior of the junction box. All junction boxes shall accept same key. JB to be of CRCA with 2mm thick and IP 65 protection class. Door handle shall be of SS. Self locking type with common key. Door gasket shall be of synthetic rubber.Earth bar shall be made of copper of size 25 X 6mm size.Earth stud shall be provided for safety grounding. TB shall be in multiple of 12 nos. Maximum **180 TBs** shall be provided for signal including spare as per Instrument schedule grouping. Please note that Metal JB or FRP JB will be decided during detailed engineering without price any implications.

<u>III. General Requirement applicable to Transmitter Enclosures & Racks :</u>

1. Surface preparation and Painting

a. All sheet metal / exterior steel surfaces shall rust free and scale free and all other residue during fabrication operation such as Oil, grease and salts etc. shall be removed by one or more solvent cleaning methods. Epoxy primer surface shall be applied to all exterior and interior surfaces. Epoxy paint shall be applied to all surfaces and the paint thickness shall be 100 to150 microns. The finish colours for exterior and interior surfaces shall conform to the shades mentioned in scope of supply.

1. **Grounding**

   a. Enclosures and Racks shall be provided with a continuous tinned copper ground bus of minimum 50 mm X 6 mm cross section, extended along the entire length. The ground bus shall have two (2) bolts drilling with GI bolts and nuts at each end.

2. **Name plate / Label.**

   a. Service details and Tag no. shall be engraved on a nameplate or label for each of the Transmitter. These Nameplates or Labels shall be of white non-hygroscopic (Polyamide sheet) material with engraved black lettering on white background. This shall be fixed on to the Impulse Pipe closer to the Transmitter inside the Enclosure / Rack.

3. **Wiring Details**

   a. Interconnecting wiring shall be provided between all electrical devices mounted in the panels and between the devices and terminal blocks if the devices are to be connected to equipment outside the panels by cabling. All interior wiring shall be installed neatly and carefully and shall be terminated at suitable terminal blocks in the Junction box. Sufficient clearance shall be provided for all control and instrumentation leads.

   b. Each wire shall be identified at both ends with wire designations as per approved wiring diagram. Interlocking type ferrules shall be used for identification.

   c. All wire termination shall be made with insulated sleeve and cage clamp type terminals.

   d. All signal wiring shall be done with 2 pair, 0.75 sq. mm annealed tinned copper, pair twisted overall & shielded (Individual & overall), voltage grade 650 V , FRLS PVC sheathed cable and 4 pair, 0.5 sq. mm for PS/DPS. For power supply application, 2.5 sq mm, 1100V cable shall be used.

   e. Wires shall be dressed and run in trays or troughs with clamp-on type covers. Wiring may be neatly bunched in-groups by non-metallic cleats or bands. Shield wires shall be terminated on separate terminal blocks.

   f. Internal wiring shall follow distinct color coding to segregate different voltage levels viz. 24V DC & 230V AC

   g. Junction Box of enclosures will be provided with removable, gasketted cable gland for cable entrance.

4. **Fuse Blocks**

   a. Fuse blocks shall be modular type with bakelite frame and reinforced retaining clips.

5. **Terminal Blocks**

   a. Terminal blocks shall be DIN rail mounted and shall have Cage clamp type connection which shall be maintained for all panels uniformly.

b. The rated cross section of the terminal blocks shall be suitable for connecting 0.5-mm²/2.5 mm². Conductor of suitable voltage grade as specified.

c. Terminal blocks shall be mounted vertically with adequate spacing between rows for routing the cable troughs and to allow adequate free workspace for termination and removal of wires.

d. Terminal blocks shall be provided with white marking strips/self adhesive marker cards.

e. At least 30 percent spare unused terminals shall be provided on each terminal blocks for circuit modifications and for termination of all conductors in a multi conductor control cables.

f. Terminal blocks for termination of electrical power supply shall be type WAGO / PHOENIX make of suitable size with marking strips.

g. The last terminal in a rail-mounted assembly shall be closed with an end plate and end bracket.

IV. Documents to be Submitted by Vendor for Approval :

1. OGA for Transmitter Enclosure and Racks.
2. Layout of Components in each of Transmitter Enclosure and Rack.
3. Electrical diagrams for each Transmitter Enclosure and Rack.
4. Component datasheets
5. Quality plan including Welding Procedure specification and Welder Procedure qualification Record.
6. The quality plan shall include Visual inspection, GA BOM/Layout features verification, Dimensions, Paint shade, thickness measurement, Alignment of sections, component ratings, Wiring, IR, HV, review of TC for instruments / Devices, Accessibility of TBs / Devices, Illumination, Tubing and Degree of protection (Review of type test certificate)

V. Specific requirements

1. Where grouping is not provided for instruments, same shall be indicated during detailed engineering.
2. SS tubing between valve manifold and transmitter for each service shall be done as per Transmitter Model Nos with mounting details will be provided by BHEL EDN.In Case If Transmitter Model Nos with mounting details are not received before dispatch, Vendor has to supply tube and tube connectors and Erect the transmitters and valve manifold during commissioning time as per BHEL EDN Instruction.
3. Packing should be Wooden packing is must for all the LIE/LIR consignment. Delicate items to be bubble wrapped with sufficient care.

TECHNICAL REQUIREMENTS FOR TEMPERATURE TRANSMITTER ENCLOSURE/JUNCTION BOX:

1. The Junction Box is provided for mounting Pipe Mounted Temperature Transmitters. This shall be constructed of 3.0 mm thick steel sheet material. These shall confirm to IP 65 protection class.

2. The Junction Box/Enclosure shall be of following sizes (in millimeters).

   Type A – 800(W) x 500(D) x 1100(H) (Shall have Four rows of 2" pipe & 180 terminals)
   Type B - 800(W) x 500(D) x 900(H) (Shall have Three rows of 2" pipe & 150 terminals)
   Type C - 800(W) x 500(D) x 600(H) (Shall have Two rows of 2" pipe & 60 terminals)

3. These shall be reinforced as required to ensure true surfaces and to provide adequate support for instruments and other equipment mounted therein. Doors shall be provided and shall be arranged for maximum possible access to from front and back side of enclosures (as applicable) the module interior. Center posts or any member which would reduce access shall not be provided.

4. The doors shall be the three-point locking type constructed of not less than 1.6 mm steel sheet. Doors shall have concealed quick removal type pinned hinges and locking handles. Junction Box door locks shall accept the same / common key all over the plant. Gaskets shall be used between all mating sections to achieve dust proof enclosure rating. All Junction Box shall have access doors on Front side and back side.

5. All the junction boxes shall be suitable for mounting on walls, columns, structures, free standing type etc. The brackets, nuts, bolts, screws, gland and lugs required for erection are in supplier's scope.

6. Vendor shall furnish general arrangement diagrams for each type of transmitter Junction Box for approval.

7. Surface preparation and Painting

   b. All sheet metal / exterior steel surfaces shall rust free and scale free and all other residue during fabrication operation such as Oil, grease and salts etc. shall be removed by one or more solvent cleaning methods. Epoxy primer surface shall be applied to all exterior and interior surfaces. Epoxy paint shall be applied to all surfaces and the paint thickness shall be 100 to150 microns. The finish colours for exterior and interior surfaces shall conform to the shades mentioned in scope of supply.

8. **Terminal Blocks**

   a. Terminal blocks shall be DIN rail mounted and shall have Cage clamp type connection which shall be maintained for all panels uniformly.

b. The rated cross section of the terminal blocks shall be suitable for connecting 0.5-mm²/2.5 mm². Conductor of suitable voltage grade as specified.

c. Terminal blocks shall be mounted vertically with adequate spacing between rows for routing the cable troughs and to allow adequate free workspace for termination and removal of wires.

d. Terminal blocks shall be provided with white marking strips/self adhesive marker cards.

e. Terminal blocks for termination of electrical power supply shall be type WAGO / PHOENIX make of suitable size with marking strips.

f. The last terminal in a rail-mounted assembly shall be closed with an end plate and end bracket.

9. <u>Documents to be Submitted by Vendor for Approval:</u>

a. OGA for Junction Box.

b. Layout of Transmitter in each Type of Junction Box.

c. Quality plan. This will be approved by BHEL / (END USER)

d. The quality plan shall include Visual inspection, GA BOM/Layout features verification, Dimensions, Paint shade, thickness measurement, IR, HV, Accessibility of TBs / Devices, Degree of protection (Review of type test certificate)

PROJECT: RATE CONTRACT FOR LIE/LIR

CUSTOMER: M/s TSGENCO , ADANI POWER

HOOK UP SCHEMES

COPY RIGHT AND CONFIDENTIAL

THE INFORMATION ON THIS DOCUMENT IS THE PROPERTY OF BHARAT HEAVY ELECTRICALS LIMITED. IT MUST NOT BE USED DIRECTLY OR INDIRECTLY IN ANY WAY DETRIMENTAL TO THE INTEREST OF THE COMPANY.

REVISIONS :	APPROVED BY		
	DIPTENDU GHOSH		
	PREPARED BY	ISSUED	DATE
	RAJESH LINGUTLA	416	09/07/24

REVISION NO	DATE

COPY RIGHT AND CONFIDENTIAL
The information on this document is the property of Bharat Heavy Electricals Limited.
It must not be used directly or indirectly in anyway detrimental to the interest to the Company.

A4 - 10

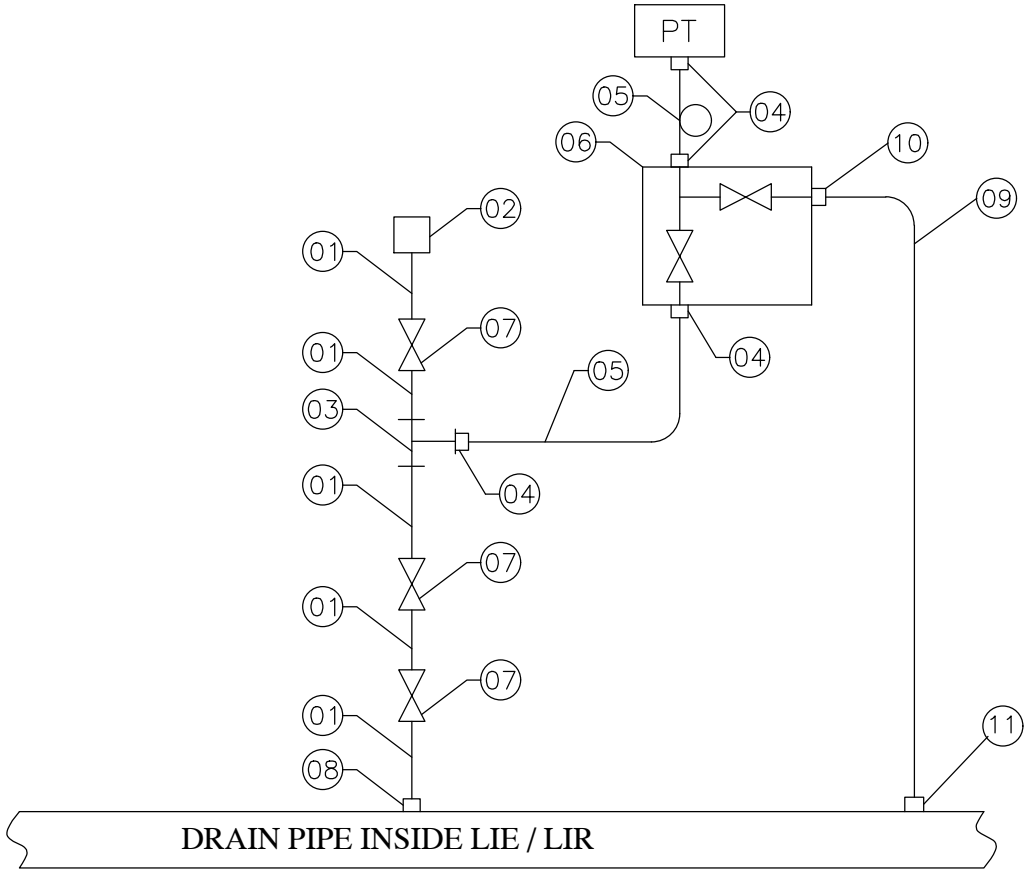

NOTES:

01. "TRANSMITTER BELOW SOURCE"
02. FOR BILL OF MATERIAL REFER PAGE 03 OF 33
03. DRAIN PIPE / 2" NB SCH 80 - A106 Gr. C
04. ITEM NO. 05 SHALL BE FORMED AS A SYPHON FOR SERVICES WITH MEDIUM AS STEAM.

CE/416/NON-NTPC/RC/HUP

REV. NO. 00

ITEM NO.	ITEM DESCRIPTION	QTY / INST. (Nos.)
01	SEAMLESS PIPE MATL.: ASTM A335 P22 SIZE: 1/2" NB-XXS	A/R
02	BULKHEAD COUPLING / AS PER ANSI B16.11 MATL.: ASTM A182 F22 SIZE: 1/2" NB-SW / CL : 9000 LBS	01
03	FORGED UNEQUAL TEE/AS PER ANSI B16.11 MATL.: ASTM A182 F22 SIZE: 2 x 1/2" NB -SW X 1/2" NPTF / CL 9000LBS	01
04	MALE DFDC CONNECTOR MATL.: SS316 SIZE: 1/2" NPTM x TO SUIT 1/2" OD SS TUBE	04
05	SEAMLESS TUBE MATL.: A213 TP 316L SIZE: 1/2" OD x 2.1mm THK.	A/R
06	TWO VALVE MANIFOLD WITH DRAIN PLUG BODY: SS316, BAR STOCK PORT SIZE: 1/2" NPTF / PR. TESTING : 9000PSI	01
07	FORGED GLOBE VALVE BODY: ASTM A182 F22 / STEM: ASTM A182 Gr. F6a SIZE: 1/2" NB-SW / CL 3000 SPL	03
08	HALF COUPLING / AS PER ANSI B 16.11 MATL.: ASTM A182 F22 SIZE: 1/2" NB-SW / CL 9000 LBS	01
09	TUBE MATL: SS 316 SIZE: 8mm OD x 1.0mm THICK	0.15MTR
10	MALE CONNECTOR MATL: SS316 SIZE: 1/4" NPT(M) x TO SUIT 8mm OD SS TUBE / CL: 9000 LBS	01
11	ADAPTER MATL: SS316 SIZE: 1/4" OD NB X TO SUIT 8mm OD SS TUBE / CL: 6000 LBS	01

COPY RIGHT AND CONFIDENTIAL
The information on this document is the property of Bharat Heavy Electricals Limited.
It must not be used directly or indirectly in anyway detrimental to the interest to the Company.

DATE

REVISION NO

REVISION NO	DATE

COPY RIGHT AND CONFIDENTIAL
The information on this document is the property of Bharat Heavy Electricals Limited.
It must not be used directly or indirectly in anyway detrimental to the interest to the Company.

A4 – 10

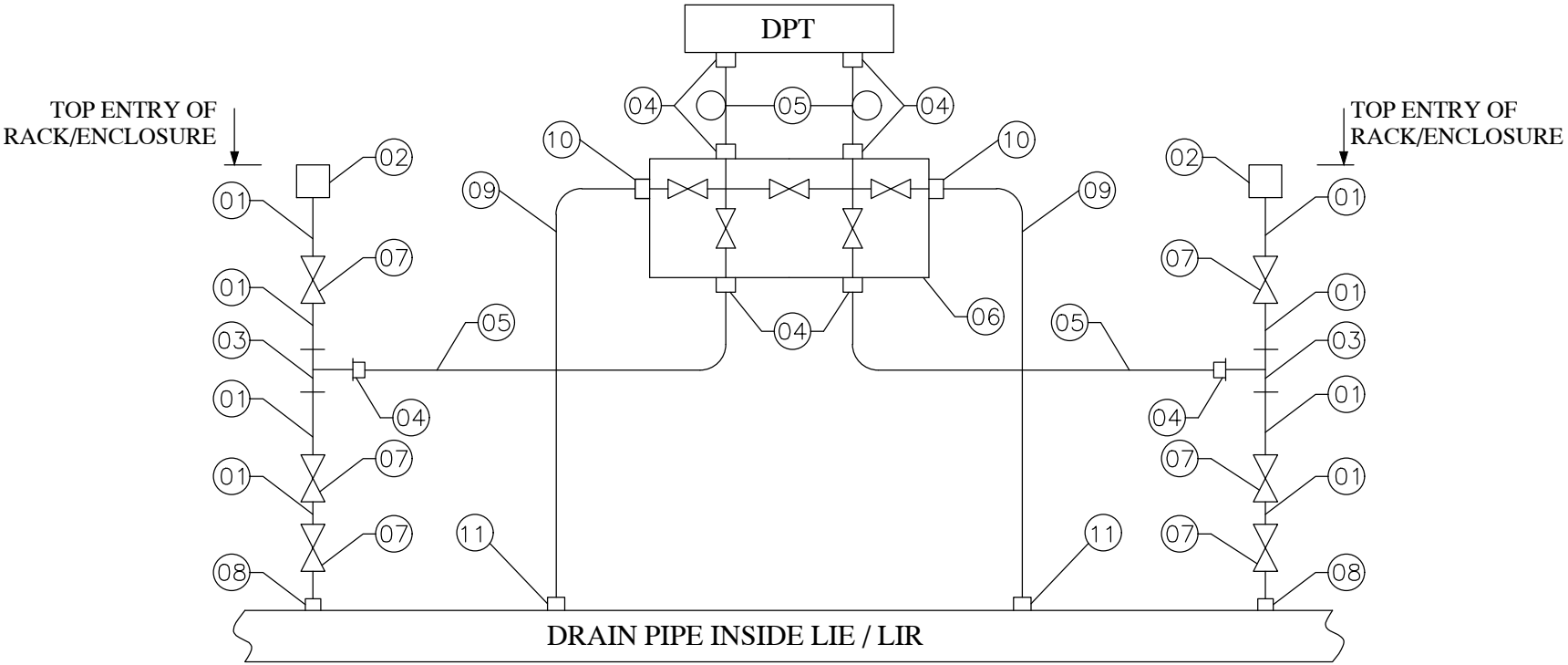

NOTES:

01. "TRANSMITTER BELOW SOURCE"
02. FOR BILL OF MATERIAL REFER PAGE 05 OF 33
03. DRAIN PIPE / 2" NB SCH 80 - A106 Gr. C
04. ITEM NO. 05 SHALL BE FORMED AS A SYPHON FOR SERVICES WITH MEDIUM AS STEAM.

ITEM NO.	ITEM DESCRIPTION	QTY / INST. (Nos.)
01	SEAMLESS PIPE MATL.: ASTM A335 P22 SIZE: 1/2" NB-SCH XXS	A/R
02	BULKHEAD COUPLING / AS PER ANSI B16.11 MATL.: ASTM A182 F22 SIZE: 1/2" NB-SW / CL : 9000 LBS	02
03	FORGED UNEQUAL TEE/AS PER ANSI B16.11 MATL.: ASTM A182 F22 SIZE: 2 x 1/2" NB -SW X 1/2" NPTF / CL 9000LBS	02
04	MALE DFDC CONNECTOR MATL.: SS316 SIZE: 1/2" NPTM x TO SUIT 1/2" OD SS TUBE	08
05	SEAMLESS TUBE MATL.: A213 TP 316L SIZE: 1/2" OD x 2.1mm THK.	A/R
06	FIVE VALVE MANIFOLD WITH DRAIN PLUG BODY: SS316, BAR STOCK. PORT SIZE: 1/2" NPTF / PR. TESTING : 9000PSI	01
07	FORGED GLOBE VALVE BODY: ASTM A182 F22 / STEM: ASTM A182 Gr. F6a SIZE: 1/2" NB-SW / CL 3000SPL	06
08	HALF COUPLING / AS PER ANSI B16.11 MATL.: ASTM A182 F22 SIZE: 1/2" NB-SW / CL 9000 LBS	02
09	TUBE MATL: SS 316 SIZE: 8mm OD x 1.0mm THICK	0.3MTR
10	MALE CONNECTOR MATL: SS316 SIZE: 1/4" NPT(M) x TO SUIT 8mm OD SS TUBE / CL: 9000 LBS	02
11	ADAPTER MATL: SS316 SIZE: 1/4" OD NB X TO SUIT 8mm OD SS TUBE / CL: 6000 LBS	02

COPY RIGHT AND CONFIDENTIAL
The information on this document is the property of Bharat Heavy Electricals Limited.
It must not be used directly or indirectly in anyway detrimental to the interest to the Company.

DATE

REVISION NO

REVISION NO	DATE

COPY RIGHT AND CONFIDENTIAL
The information on this document is the property of Bharat Heavy Electricals Limited.
It must not be used directly or indirectly in anyway detrimental to the interest to the Company.

A4 - 10

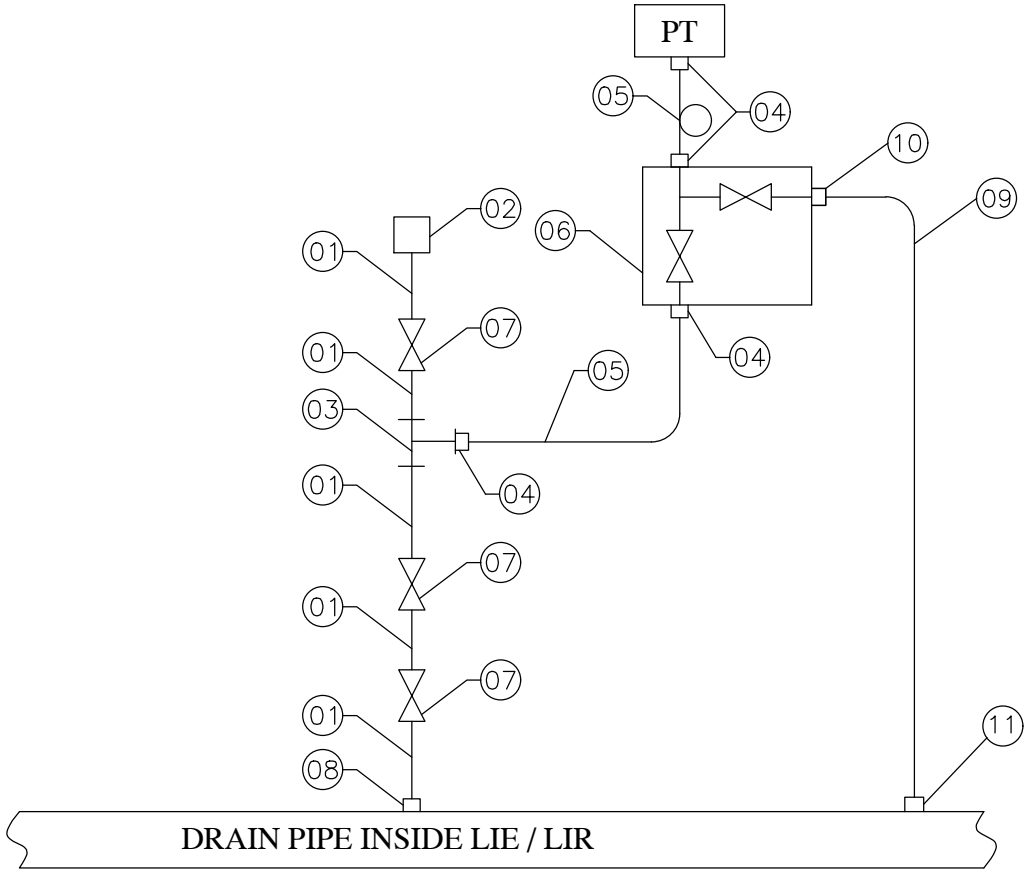

NOTES:

01. "TRANSMITTER BELOW SOURCE"
02. FOR BILL OF MATERIAL REFER PAGE 07 OF 33
03. DRAIN PIPE / 2" NB SCH 80 - A106 Gr. C
04. ITEM NO. 05 SHALL BE FORMED AS A SYPHON FOR SERVICES WITH MEDIUM AS STEAM.

CE/416/NON-NTPC/RC/HUP

REV. NO. 00

ITEM NO.	ITEM DESCRIPTION	QTY / INST. (Nos.)
01	SEAMLESS PIPE MATL.: ASTM A335 P22 SIZE: 1/2" NB-SCH 160	A/R
02	BULKHEAD COUPLING / AS PER ANSI B16.11 MATL.: ASTM A182 F22 SIZE: 1/2" NB-SW / CL : 6000 LBS	01
03	FORGED UNEQUAL TEE/AS PER ANSI B16.11 MATL.: ASTM A182 F22 SIZE: 2 x 1/2" NB -SW X 1/2" NPTF / CL 6000LBS	01
04	MALE DFDC CONNECTOR MATL.: SS316 SIZE: 1/2" NPTM x TO SUIT 1/2" OD SS TUBE	04
05	SEAMLESS TUBE MATL.: A213 TP 316L SIZE: 1/2" OD x 2.1mm THK.	A/R
06	TWO VALVE MANIFOLD WITH DRAIN PLUG BODY: SS316, BAR STOCK PORT SIZE: 1/2" NPTF / PR. TESTING : 6000PSI	01
07	FORGED GLOBE VALVE BODY: ASTM A182 F22 / STEM: ASTM A182 Gr. F6a SIZE: 1/2" NB-SW / CL 3000 SPL	03
08	HALF COUPLING / AS PER ANSI B 16.11 MATL.: ASTM A182 F22 SIZE: 1/2" NB-SW / CL 6000 LBS	01
09	TUBE MATL: SS 316 SIZE: 8mm OD x 1.0mm THICK	0.15MTR
10	MALE CONNECTOR MATL: SS316 SIZE: 1/4" NPT(M) x TO SUIT 8mm OD SS TUBE / CL: 6000 LBS	01
11	ADAPTER MATL: SS316 SIZE: 1/4" OD NB X TO SUIT 8mm OD SS TUBE / CL: 6000 LBS	01

COPY RIGHT AND CONFIDENTIAL
The information on this document is the property of Bharat Heavy Electricals Limited.
It must not be used directly or indirectly in anyway detrimental to the interest to the Company.

DATE

REVISION NO

REVISION NO	DATE

COPY RIGHT AND CONFIDENTIAL
The information on this document is the property of Bharat Heavy Electricals Limited.
It must not be used directly or indirectly in anyway detrimental to the interest to the Company.

A4 - 10

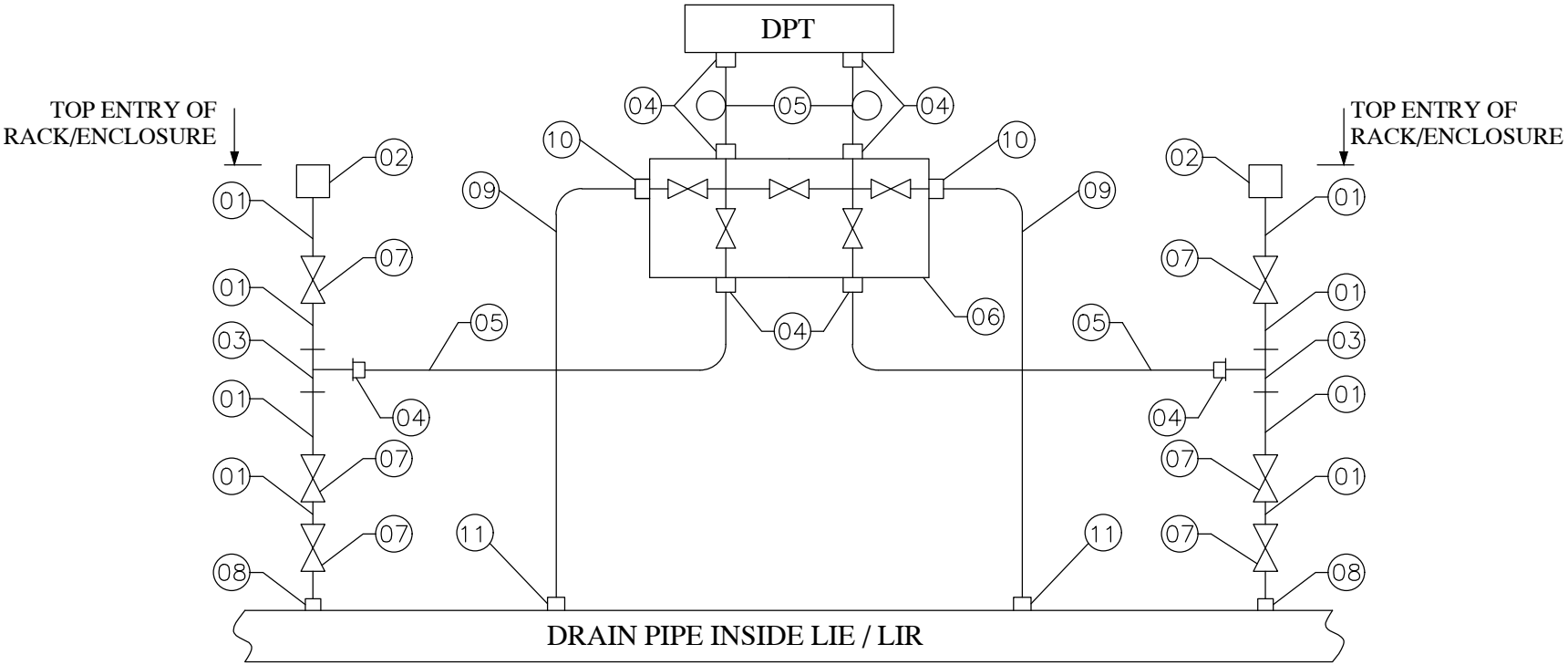

NOTES:

01. "TRANSMITTER BELOW SOURCE"
02. FOR BILL OF MATERIAL REFER PAGE 09 OF 33
03. DRAIN PIPE / 2" NB SCH 80 - A106 Gr. C
04. ITEM NO. 05 SHALL BE FORMED AS A SYPHON FOR SERVICES WITH MEDIUM AS STEAM.

ITEM NO.	ITEM DESCRIPTION	QTY / INST. (Nos.)
01	SEAMLESS PIPE MATL.: ASTM A335 P22 SIZE: 1/2" NB-SCH 160	A/R
02	BULKHEAD COUPLING / AS PER ANSI B16.11 MATL.: ASTM A182 F22 SIZE: 1/2" NB-SW / CL : 6000 LBS	02
03	FORGED UNEQUAL TEE/AS PER ANSI B16.11 MATL.: ASTM A182 F22 SIZE: 2 x 1/2" NB -SW X 1/2" NPTF / CL 6000LBS	02
04	MALE DFDC CONNECTOR MATL.: SS316 SIZE: 1/2" NPTM x TO SUIT 1/2" OD SS TUBE	08
05	SEAMLESS TUBE MATL.: A213 TP 316L SIZE: 1/2" OD x 2.1mm THK.	A/R
06	FIVE VALVE MANIFOLD WITH DRAIN PLUG BODY: SS316, BAR STOCK. PORT SIZE: 1/2" NPTF / PR. TESTING : 6000PSI	01
07	FORGED GLOBE VALVE BODY: ASTM A182 F22 / STEM: ASTM A182 Gr. F6a SIZE: 1/2" NB-SW / CL 3000SPL	06
08	HALF COUPLING / AS PER ANSI B16.11 MATL.: ASTM A182 F22 SIZE: 1/2" NB-SW / CL 6000 LBS	02
09	TUBE MATL: SS 316 SIZE: 8mm OD x 1.0mm THICK	0.3 MTR
10	MALE CONNECTOR MATL: SS316 SIZE: 1/4" NPT(M) x TO SUIT 8mm OD SS TUBE / CL: 6000 LBS	02
11	ADAPTER MATL: SS316 SIZE: 1/4" OD NB X TO SUIT 8mm OD SS TUBE / CL: 6000 LBS	02

COPY RIGHT AND CONFIDENTIAL
The information on this document is the property of Bharat Heavy Electricals Limited.
It must not be used directly or indirectly in anyway detrimental to the interest to the Company.

DATE

REVISION NO

REVISION NO	DATE

COPY RIGHT AND CONFIDENTIAL
The information on this document is the property of Bharat Heavy Electricals Limited.
It must not be used directly or indirectly in anyway detrimental to the interest to the Company.

A4 - 10

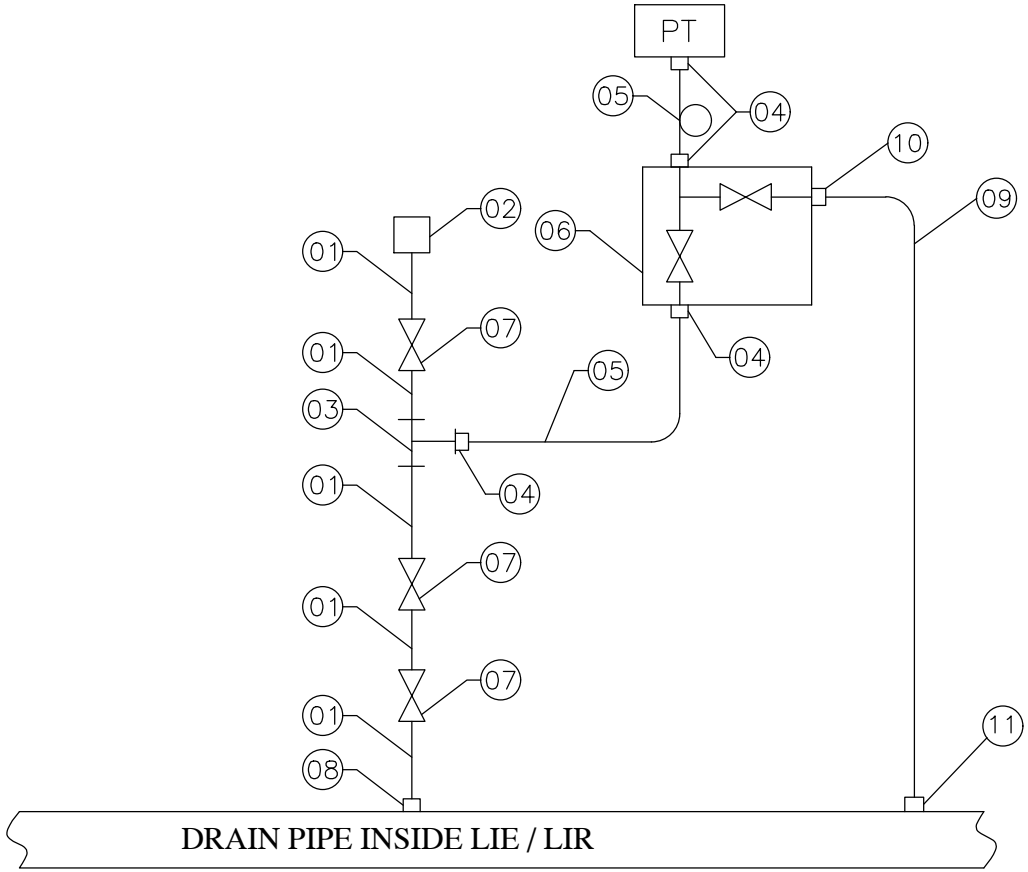

NOTES:

01. "TRANSMITTER BELOW SOURCE"
02. FOR BILL OF MATERIAL REFER PAGE 11 OF 33
03. DRAIN PIPE / 2" NB SCH 80 - A106 Gr. C
04. ITEM NO. 05 SHALL BE FORMED AS A SYPHON FOR SERVICES WITH MEDIUM AS STEAM.

CE/416/NON-NTPC/RC/HUP

REV. NO. 00

ITEM NO.	ITEM DESCRIPTION	QTY / INST. (Nos.)
01	SEAMLESS PIPE MATL.: ASTM A106 Gr.C SIZE: 1/2" NB-SCH 160	A/R
02	BULKHEAD COUPLING / AS PER ANSI B16.11 MATL.: ASTM A105 SIZE: 1/2" NB-SW / CL : 6000 LBS	01
03	FORGED UNEQUAL TEE/AS PER ANSI B16.11 MATL.: ASTM A105 SIZE: 2 x 1/2" NB -SW X 1/2" NPTF / CL 6000LBS	01
04	MALE DFDC CONNECTOR MATL.: SS316 SIZE: 1/2" NPTM x TO SUIT 1/2" OD SS TUBE	04
05	SEAMLESS TUBE MATL.: A213 TP 316L SIZE: 1/2" OD x 2.1mm THK.	A/R
06	TWO VALVE MANIFOLD WITH DRAIN PLUG BODY: SS316, BAR STOCK PORT SIZE: 1/2" NPTF / PR. TESTING : 6000PSI	01
07	FORGED GLOBE VALVE BODY: MATL.: ASTM A105 / STEM: ASTM A182 Gr. F6a SIZE: 1/2" NB-SW / CL 2500 SPL	03
08	HALF COUPLING / AS PER ANSI B 16.11 MATL.: ASTM A105 SIZE: 1/2" NB-SW / CL 6000 LBS	01
09	TUBE MATL: SS 316 SIZE: 8mm OD x 1.0mm THICK	0.15MTR
10	MALE CONNECTOR MATL: SS316 SIZE: 1/4" NPT(M) x TO SUIT 8mm OD SS TUBE / CL: 6000 LBS	01
11	ADAPTER MATL: SS316 SIZE: 1/4" OD NB X TO SUIT 8mm OD SS TUBE / CL: 6000 LBS	01

COPY RIGHT AND CONFIDENTIAL
The information on this document is the property of Bharat Heavy Electricals Limited.
It must not be used directly or indirectly in anyway detrimental to the interest to the Company.

DATE

REVISION NO

REVISION NO	DATE	COPY RIGHT AND CONFIDENTIAL The information on this document is the property of Bharat Heavy Electricals Limited. It must not be used directly or indirectly in anyway detrimental to the interest to the Company.

A4 - 10

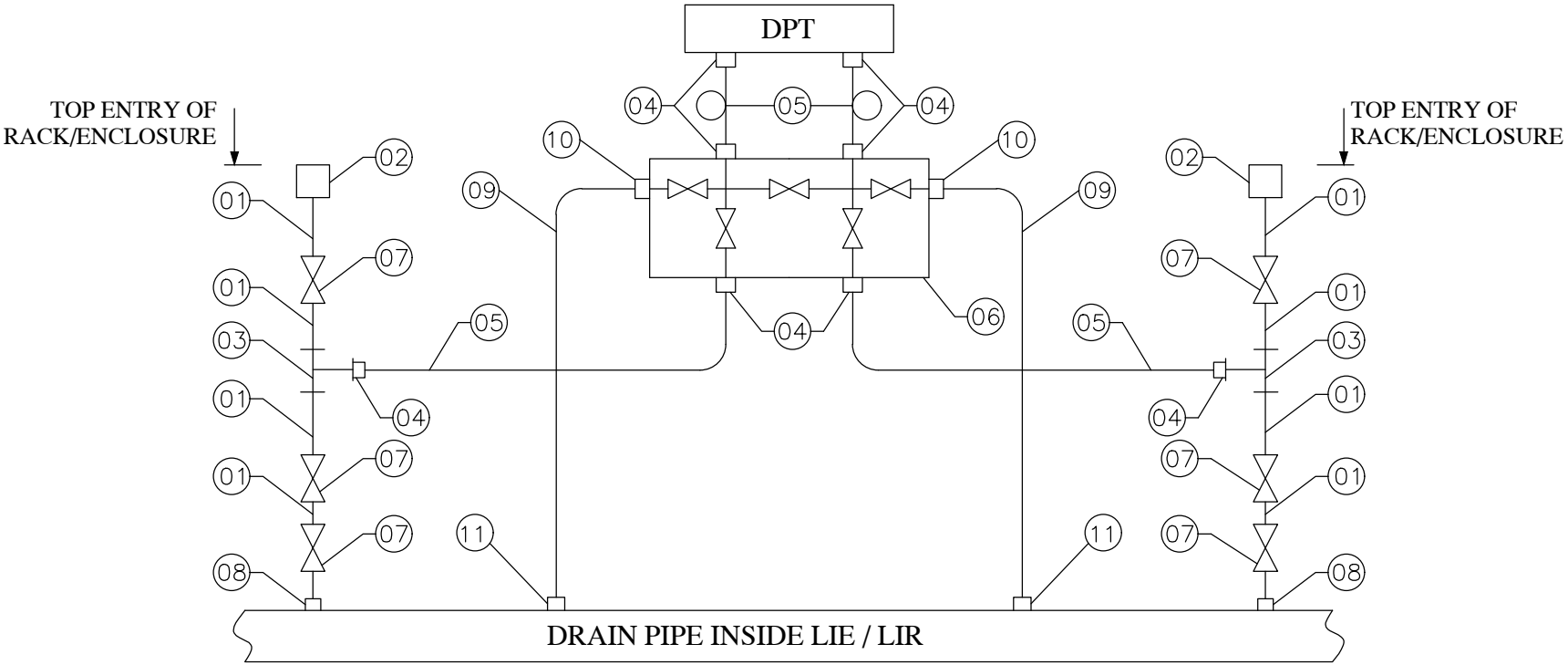

NOTES:

01. "TRANSMITTER BELOW SOURCE"
02. FOR BILL OF MATERIAL REFER PAGE 13 OF 33
03. DRAIN PIPE / 2" NB SCH 80 - A106 Gr. C
04. ITEM NO. 05 SHALL BE FORMED AS A SYPHON FOR SERVICES WITH MEDIUM AS STEAM.

CE/416/NON-NTPC/RC/HUP

REV. NO. 00

PAGE NO.: 12 OF 33

ITEM NO.	ITEM DESCRIPTION	QTY / INST. (Nos.)
01	SEAMLESS PIPE MATL.: ASTM A106 Gr.C SIZE: 1/2" NB-SCH 160	A/R
02	BULKHEAD COUPLING / AS PER ANSI B16.11 MATL.: ASTM A105 SIZE: 1/2" NB-SW / CL : 6000 LBS	02
03	FORGED UNEQUAL TEE/AS PER ANSI B16.11 MATL.: ASTM A105 SIZE: 2 x 1/2" NB -SW X 1/2" NPTF / CL 6000LBS	02
04	MALE DFDC CONNECTOR MATL.: SS316 SIZE: 1/2" NPTM x TO SUIT 1/2" OD SS TUBE	08
05	SEAMLESS TUBE MATL.: A213 TP 316L SIZE: 1/2" OD x 2.1mm THK.	A/R
06	FIVE VALVE MANIFOLD WITH DRAIN PLUG BODY: SS316, BAR STOCK PORT SIZE: 1/2" NPTF / PR. TESTING : 6000PSI	01
07	FORGED GLOBE VALVE BODY: MATL.: ASTM A105 / STEM: ASTM A182 Gr. F6a SIZE: 1/2" NB-SW / CL 2500 SPL	06
08	HALF COUPLING / AS PER ANSI B 16.11 MATL.: ASTM A105 SIZE: 1/2" NB-SW / CL 6000 LBS	02
09	TUBE MATL: SS 316 SIZE: 8mm OD x 1.0mm THICK	0.3 MTR
10	MALE CONNECTOR MATL: SS316 SIZE: 1/4" NPT(M) x TO SUIT 8mm OD SS TUBE / CL: 6000 LBS	02
11	ADAPTER MATL: SS316 SIZE: 1/4" OD NB X TO SUIT 8mm OD SS TUBE / CL: 6000 LBS	02

COPY RIGHT AND CONFIDENTIAL
The information on this document is the property of Bharat Heavy Electricals Limited.
It must not be used directly or indirectly in anyway detrimental to the interest to the Company.

DATE

REVISION NO

REVISION NO	DATE

COPY RIGHT AND CONFIDENTIAL
The information on this document is the property of Bharat Heavy Electricals Limited.
It must not be used directly or indirectly in anyway detrimental to the interest to the Company.

A4 - 10

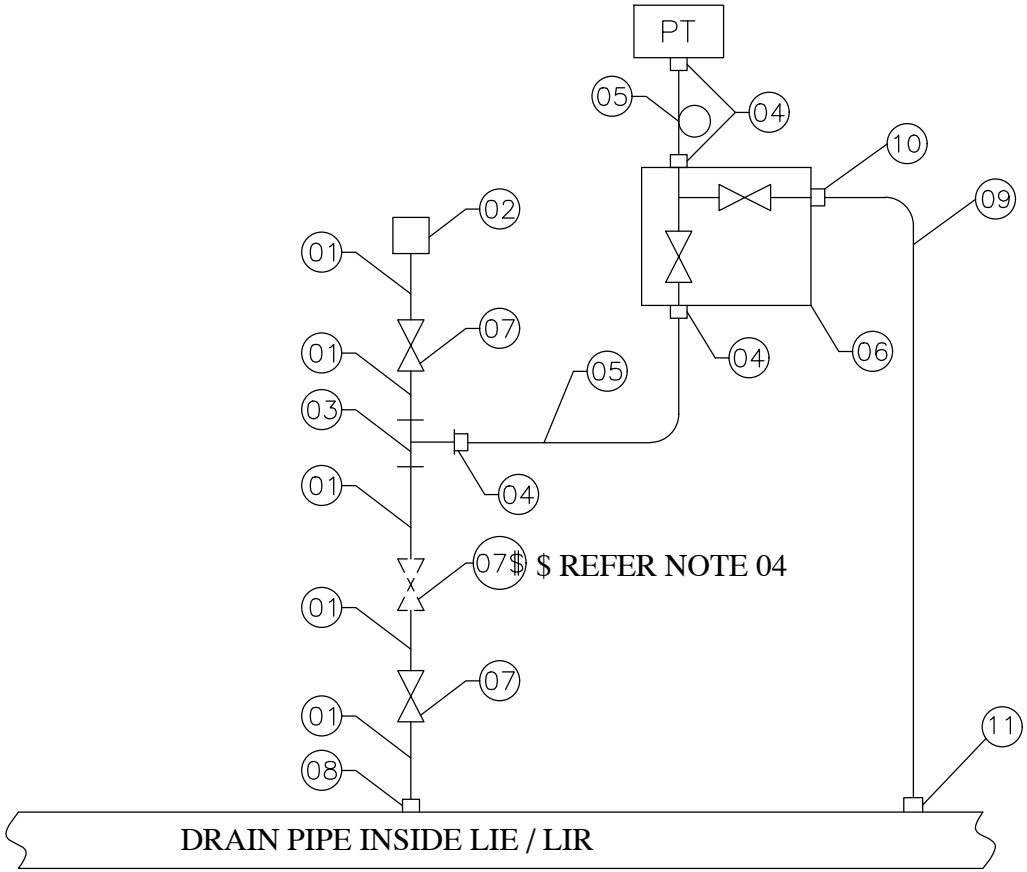

NOTES:

01. "TRANSMITTER BELOW SOURCE"
02. FOR BILL OF MATERIAL REFER PAGE 15 OF 33
03. DRAIN PIPE / 2" NB SCH 80 - A106 Gr. C
04. ITEM 07$ QUANTITY SHALL BE 3 Nos. FOR TAGS. WITH DESIGN PRESSURE >=40kg/Cm2
05. ITEM NO. 05 SHALL BE FORMED AS A SYPHON FOR SERVICES WITH MEDIUM AS STEAM.

CE/416/NON-NTPC/RC/HUP

REV. NO. 00

ITEM NO.	ITEM DESCRIPTION	QTY / INST. (Nos.)
01	SEAMLESS PIPE MATL.: ASTM A106 Gr.C SIZE: 1/2" NB-SCH 80	A/R
02	BULKHEAD COUPLING / AS PER ANSI B16.11 MATL.: ASTM A105 SIZE: 1/2" NB-SW / CL : 3000 LBS	01
03	FORGED UNEQUAL TEE/AS PER ANSI B16.11 MATL.: ASTM A105 SIZE: 2 x 1/2" NB -SW X 1/2" NPTF / CL 3000LBS	01
04	MALE DFDC CONNECTOR MATL.: SS316 SIZE: 1/2" NPTM x TO SUIT 1/2" OD SS TUBE	04
05	SEAMLESS TUBE MATL.: A213 TP 316 SIZE: 1/2" OD x 2.1mm THK.	A/R
06	TWO VALVE MANIFOLD WITH DRAIN PLUG BODY: SS316, BAR STOCK PORT SIZE: 1/2" NPTF / PR. TESTING : 3000PSI	01
07$	FORGED GLOBE VALVE BODY: MATL.: ASTM A105 / STEM: ASTM A182 Gr. F6a SIZE: 1/2" NB-SW / CL 800	A/R
08	HALF COUPLING / AS PER ANSI B 16.11 MATL.: ASTM A105 SIZE: 1/2" NB-SW / CL 800 LBS	01
09	TUBE MATL: SS 316 SIZE: 8mm OD x 1.0mm THICK	0.15MTR
10	MALE CONNECTOR MATL: SS316 SIZE: 1/4" NPT(M) x TO SUIT 8mm OD SS TUBE / CL: 3000 LBS	01
11	ADAPTER MATL: SS316 SIZE: 1/4" OD NB X TO SUIT 8mm OD SS TUBE / CL: 6000 LBS	01

COPY RIGHT AND CONFIDENTIAL
The information on this document is the property of Bharat Heavy Electricals Limited.
It must not be used directly or indirectly in anyway detrimental to the interest to the Company.

DATE

REVISION NO

REVISION NO	DATE

COPY RIGHT AND CONFIDENTIAL
The information on this document is the property of Bharat Heavy Electricals Limited.
It must not be used directly or indirectly in anyway detrimental to the interest to the Company.

A4 - 10

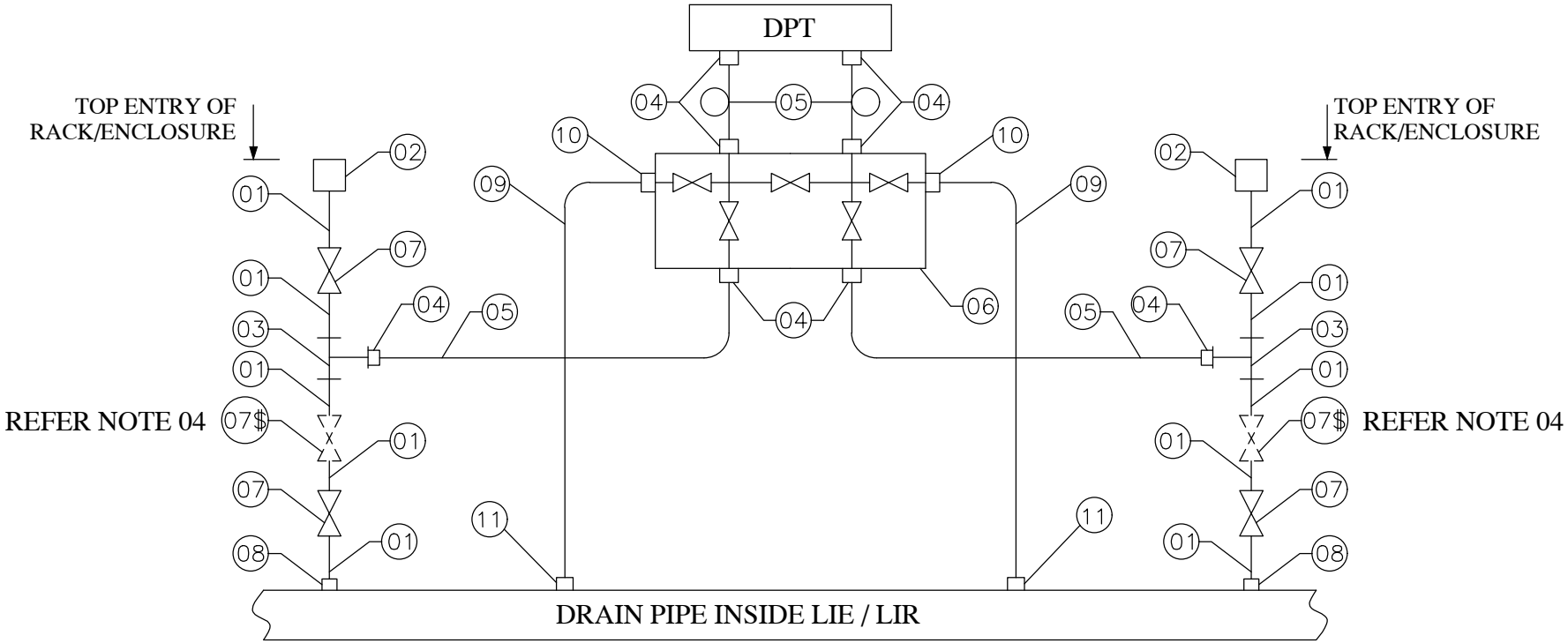

NOTES:

01. "TRANSMITTER BELOW SOURCE"
02. FOR BILL OF MATERIAL REFER PAGE 17 OF 33
03. DRAIN PIPE / 2" NB SCH 80 - A106 Gr. C
04. ITEM 07$ QUANTITY SHALL BE 6 Nos. FOR TAGS. WITH DESIGN PRESSURE >=40kg/Cm2
05. ITEM NO. 05 SHALL BE FORMED AS A SYPHON FOR SERVICES WITH MEDIUM AS STEAM.

CE/416/NON-NTPC/RC/HUP

REV. NO. 00

ITEM NO.	ITEM DESCRIPTION	QTY / INST. (Nos.)
01	SEAMLESS PIPE MATL.: ASTM A106 Gr.C SIZE: 1/2" NB-SCH 80	A/R
02	BULKHEAD COUPLING / AS PER ANSI B16.11 MATL.: ASTM A105 SIZE: 1/2" NB-SW / CL : 3000 LBS	02
03	FORGED UNEQUAL TEE/AS PER ANSI B16.11 MATL.: ASTM A105 SIZE: 2 x 1/2" NB -SW X 1/2" NPTF / CL 3000LBS	02
04	MALE DFDC CONNECTOR MATL.: SS316 SIZE: 1/2" NPTM x TO SUIT 1/2" OD SS TUBE	08
05	SEAMLESS TUBE MATL.: A213 TP 316L SIZE: 1/2" OD x 2.1mm THK.	A/R
06	FIVE VALVE MANIFOLD WITH DRAIN PLUG BODY: SS316, BAR STOCK PORT SIZE: 1/2" NPTF / PR. TESTING : 3000PSI	01
07$	FORGED GLOBE VALVE BODY: MATL.: ASTM A105 / STEM: ASTM A182 Gr. F6a SIZE: 1/2" NB-SW / CL 800	A/R
08	HALF COUPLING / AS PER ANSI B 16.11 MATL.: ASTM A105 SIZE: 1/2" NB-SW / CL 3000 LBS	02
09	TUBE MATL: SS 316 SIZE: 8mm OD x 1.0mm THICK	0.3MTR
10	MALE CONNECTOR MATL: SS316 SIZE: 1/4" NPT(M) x TO SUIT 8mm OD SS TUBE / CL: 3000 LBS	02
11	ADAPTER MATL: SS316 SIZE: 1/4" OD NB X TO SUIT 8mm OD SS TUBE / CL: 6000 LBS	02

COPY RIGHT AND CONFIDENTIAL
The information on this document is the property of Bharat Heavy Electricals Limited.
It must not be used directly or indirectly in anyway detrimental to the interest to the Company.

DATE

REVISION NO

REVISION NO	DATE

COPY RIGHT AND CONFIDENTIAL
The information on this document is the property of Bharat Heavy Electricals Limited.
It must not be used directly or indirectly in anyway detrimental to the interest to the Company.

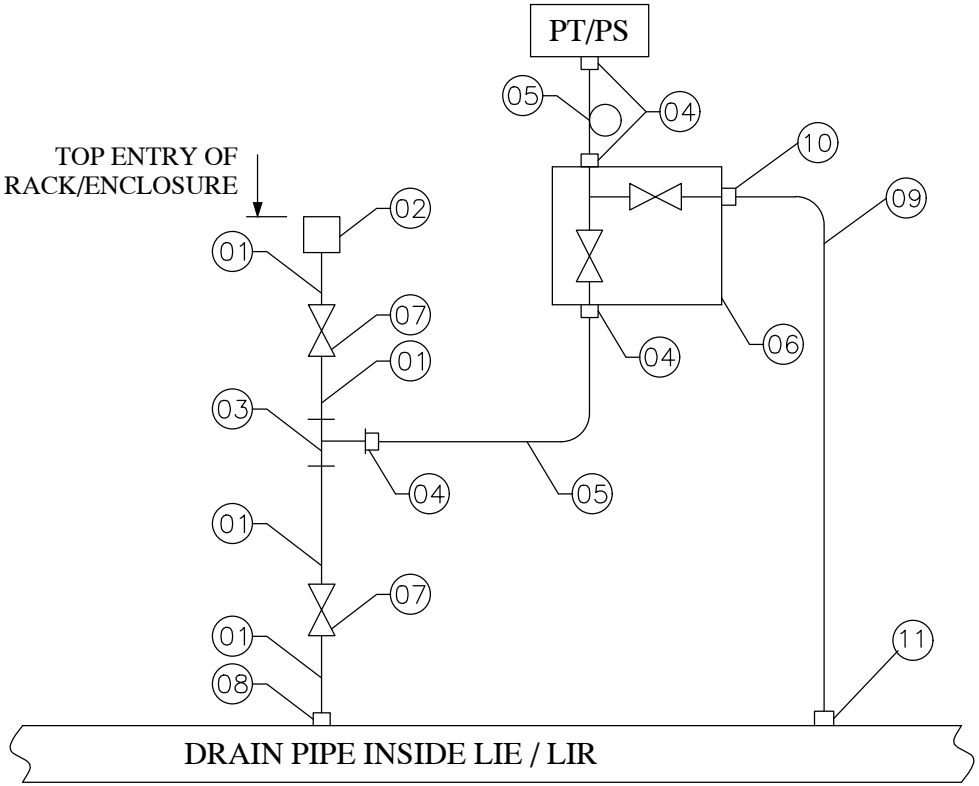

NOTES:

01. "TRANSMITTER BELOW SOURCE"
02. FOR BILL OF MATERIAL REFER PAGE 19 OF 33
03. DRAIN PIPE / 2" NB SCH 80 - A106 Gr. C
04. ITEM NO. 05 SHALL BE FORMED AS A SYPHON FOR SERVICES WITH MEDIUM AS STEAM.

A4 - 10

CE/416/NON-NTPC/RC/HUP

REV. NO. 00

ITEM NO.	ITEM DESCRIPTION	QTY / INST. (Nos.)
01	SEAMLESS PIPE MATL.: ASTM 312 TP316 SIZE: 1/2" NB-SCH 40	A/R
02	BULK HEAD UNION / COUPLING /AS PER ANSI B16.11 MATL.: ASTM A182 F316 SIZE: 1/2" NB-SW / CL : 3000 LBS	01
03	FORGED UNEQUAL TEE / AS PER ANSI B16.11 MATL.: ASTM A182 F316 SIZE: 2 x 1/2" NB - SW X 1/2" NPTF / CL : 3000 LBS	01
04	MALE DFDC CONNECTOR MATL.: SS316 SIZE: 1/2" NPTM x TO SUIT 1/2" OD SS TUBE	04
05	SEAMLESS TUBE MATL.: A213 TP 316L SIZE: 1/2" OD x 2.1mm THK.	A/R
06	TWO VALVE MANIFOLD WITH DRAIN PLUG MATL.: SS316, BAR STOCK. PORT SIZE: 1/2" NPTF / PR. TESTING : 3000PSI	01
07	FORGED GLOBE VALVE BODY: ASTM A182 F316 / STEM :ASTM A182 Gr F6A SIZE: 1/2" NB-SW / CL : 800	02
08	HALF COUPLING / AS PER ANSI B 16.11 MATL.: ASTM A 182 F316 SIZE: 1/2" NB SW / CL 3000 LBS	01
09	TUBE MATL: SS 316 SIZE: 8mm OD x 1.0mm THICK	0.15MTR
10	MALE CONNECTOR MATL: SS316 SIZE: 1/4" NPT(M) x TO SUIT 8mm OD SS TUBE / CL: 3000 LBS	01
11	ADAPTER MATL: SS316 SIZE: 1/4" OD NB X TO SUIT 8mm OD SS TUBE / CL: 6000 LBS	01

COPY RIGHT AND CONFIDENTIAL
The information on this document is the property of Bharat Heavy Electricals Limited.
It must not be used directly or indirectly in anyway detrimental to the interest to the Company.

DATE

REVISION NO

REVISION NO	DATE

COPY RIGHT AND CONFIDENTIAL
The information on this document is the property of Bharat Heavy Electricals Limited.
It must not be used directly or indirectly in anyway detrimental to the interest to the Company.

A4 - 10

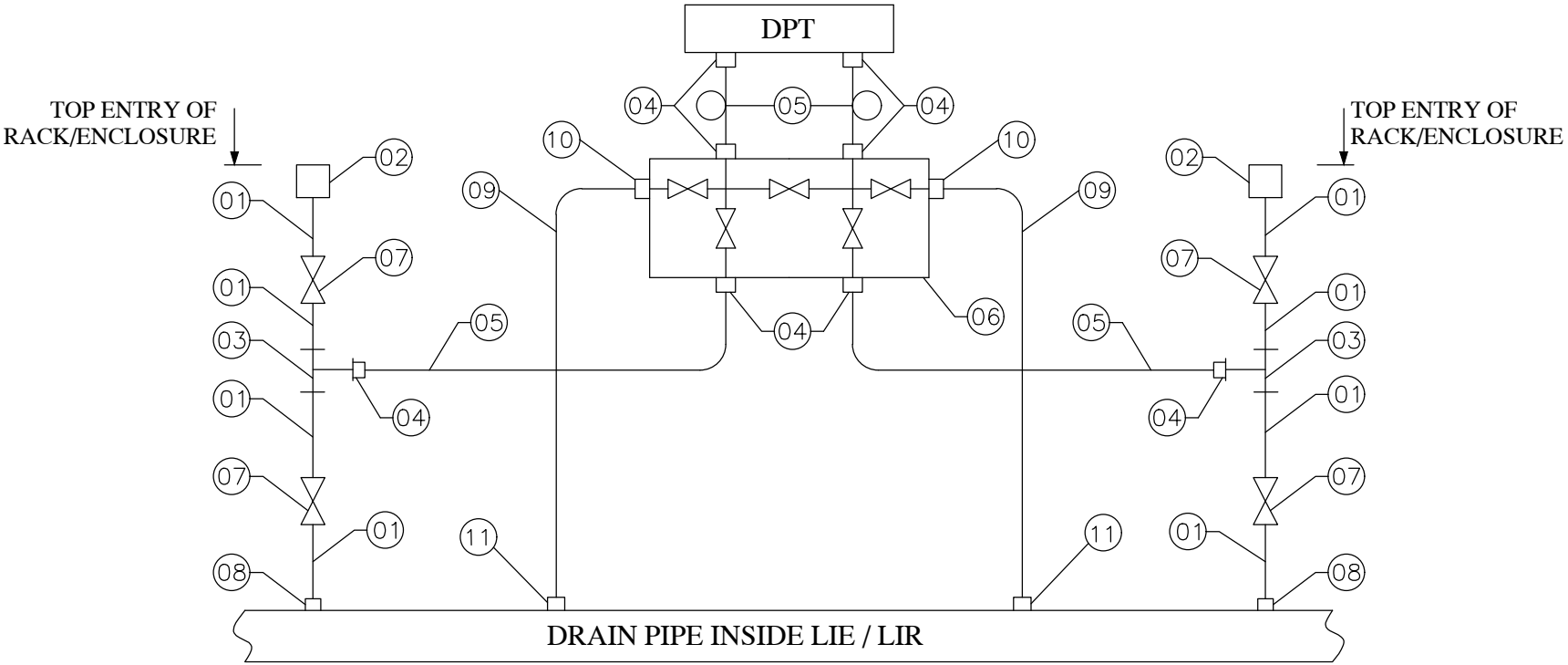

NOTES:

01. "TRANSMITTER BELOW SOURCE"
02. FOR BILL OF MATERIAL REFER PAGE 21 OF 33
03. DRAIN PIPE / 2" NB SCH 80 - A106 Gr. C
04. ITEM NO. 05 SHALL BE FORMED AS A SYPHON FOR SERVICES WITH MEDIUM AS STEAM.

ITEM NO.	ITEM DESCRIPTION	QTY / INST. (Nos.)
01	SEAMLESS PIPE MATL.: ASTM 312 TP316 SIZE: 1/2" NB-SCH 40	A/R
02	BULK HEAD UNION / COUPLING /AS PER ANSI B16.11 MATL.: ASTM A182 F316 SIZE: 1/2" NB-SW / CL : 3000 LBS	02
03	FORGED UNEQUAL TEE/AS PER ANSI B16.11 MATL.: ASTM A182 F316 SIZE: 2 x 1/2" NB - SW X 1/2" NPTF / CL : 3000 LBS	02
04	MALE DFDC CONNECTOR MATL.: SS316 SIZE: 1/2" NPTM x TO SUIT 1/2" OD SS TUBE	08
05	SEAMLESS TUBE MATL.: A213 TP 316L SIZE: 1/2" OD x 2.1mm THK.	A/R
06	FIVE VALVE MANIFOLD WITH DRAIN PLUG MATL.: SS316, BAR STOCK. PORT SIZE: 1/2" NPTF / PR. TESTING : 3000PSI	01
07	FORGED GLOBE VALVE BODY: ASTM A182 F316 / STEM :ASTM A182 Gr F6A SIZE: 1/2" NB-SW / CL : 800	04
08	HALF COUPLING / AS PER ANSI B 16.11 MATL.: ASTM A 182 F316 SIZE: 1/2" NB SW / CL 3000 LBS	02
09	TUBE MATL: SS 316 SIZE: 8mm OD x 1.0mm THICK	0.3MTR
10	MALE CONNECTOR MATL: SS316 SIZE: 1/4" NPT(M) x TO SUIT 8mm OD SS TUBE / CL: 3000 LBS	02
11	ADAPTER MATL: SS316 SIZE: 1/4" OD NB X TO SUIT 8mm OD SS TUBE / CL: 6000 LBS	02

COPY RIGHT AND CONFIDENTIAL
The information on this document is the property of Bharat Heavy Electricals Limited.
It must not be used directly or indirectly in anyway detrimental to the interest to the Company.

DATE

REVISION NO

REVISION NO	DATE	COPY RIGHT AND CONFIDENTIAL The information on this document is the property of Bharat Heavy Electricals Limited. It must not be used directly or indirectly in anyway detrimental to the interest to the Company.		

A4 – 10

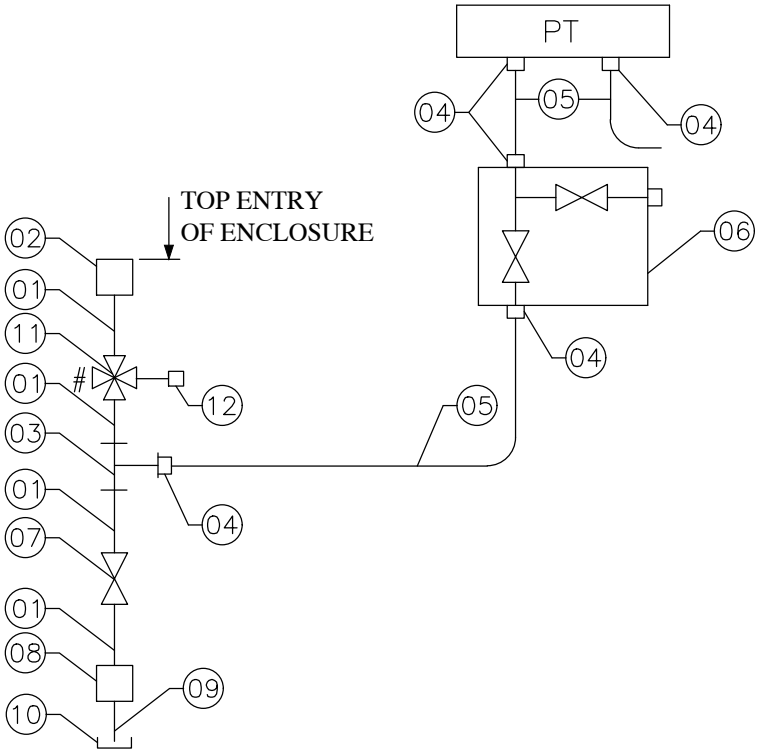

NOTES:

01. "TRANSMITTER ABOVE SOURCE"
02. FOR BILL OF MATERIAL REFER PAGE 23 OF 33
03. FOR INTERMITTANT PURGING REFER PAGE 32 & 33 OF 33

CE/416/NON-NTPC/RC/HUP

REV. NO. 00

PAGE NO.: 22 OF 33

ITEM NO.	ITEM DESCRIPTION	QTY / INST. (Nos.)
01	SEAMLESS PIPE MATL.: ASTM A106 Gr.C SIZE: 3/4" NB-SCH 80	A/R
02	BULK HEAD UNION/COUPLING/AS PER ANSI B16.11 MATL.: ASTM A105 SIZE: 3/4" NB SW / CL 3000LBS	01
03	FORGED UNEQUAL TEE/AS PER ANSI B16.11 MATL.: ASTM A105 SIZE: 2 x 3/4" NB -SW X 1/2" NPTF / CL 3000LBS	01
04	MALE CONNECTOR / TUBE FITTING/DFDC MATL.: SS316 SIZE: 1/2" NPTM x TO SUIT 1/2" OD SS TUBE	05
05	SEAMLESS TUBE MATL.: A213 TP 316L SIZE: 1/2" OD x 1.13mm THK.	A/R
06	TWO VALVE MANIFOLD WITH DRAIN PLUG BODY: SS316 PORT SIZE: 1/2" NPTF / PR. TESTING : 3000PSI	01
07	FORGED GLOBE VALVE BODY: ASTM A105 / STEM: ASTM A182 Gr. F6a SIZE: 3/4" NB-SW / CL 800	01
08	DRAIN POT: 2" NB -SCH 80 BODY: A106 Gr. C SIZE: CONN. 3/4" NB - SW	01
09	NIPPLE MATL.: ASTM A106 Gr.C SIZE: 3/4" NB-SCH 80	01
10	CAP MATL.: ASTM A105 SIZE: 3/4" NPTF	01
11	FOUR WAY VALVE MATL.: ASTM A105 / RATING CLASS 800 SIZE: (2 x 3/4" NB-SW) x (2 x 1/2" NPTF)	01
12	QUICK DISCONNECTING FITTING MATL.: SS 304 SIZE.:1/2" NPTM	01

COPY RIGHT AND CONFIDENTIAL
The information on this document is the property of Bharat Heavy Electricals Limited.
It must not be used directly or indirectly in anyway detrimental to the interest to the Company.

DATE

REVISION NO

REVISION NO	DATE	COPY RIGHT AND CONFIDENTIAL The information on this document is the property of Bharat Heavy Electricals Limited. It must not be used directly or indirectly in anyway detrimental to the interest to the Company.		

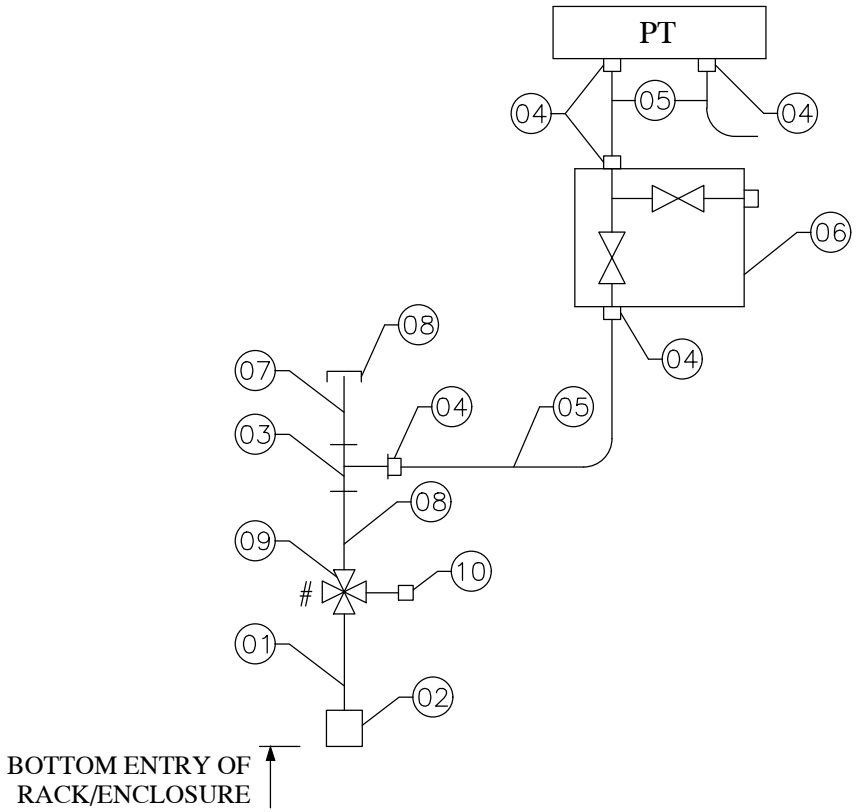

NOTES:

01. "TRANSMITTER ABOVE SOURCE"
02. FOR BILL OF MATERIAL REFER PAGE 25 OF 33
03. FOR INTERMITTANT PURGING REFER PAGE 32 & 33 OF 33

A4 – 10

CE/416/NON-NTPC/RC/HUP

REV. NO. 00

ITEM NO.	ITEM DESCRIPTION	QTY / INST. (Nos.)
01	SEAMLESS PIPE MATL.: ASTM A106 Gr.C SIZE: 3/4" NB-SCH 80	A/R
02	BULKHEAD COUPLING / AS PER ANSI B16.11 MATL.: ASTM A105 SIZE: 3/4" NB-SW / CL : 3000 LBS	01
03	FORGED UNEQUAL TEE/AS PER ANSI B16.11 MATL.: ASTM A105 SIZE: 2 x 3/4" NB -SW X 1/2" NPTF / CL 3000LBS	01
04	MALE DFDC CONNECTOR MATL.: SS316 SIZE: 1/2" NPTM x TO SUIT 1/2" OD SS TUBE	05
05	SEAMLESS TUBE MATL.: A213 TP 316L SIZE: 1/2" OD x 1.13mm THK.	A/R
06	TWO VALVE MANIFOLD WITH DRAIN PLUG BODY: SS316 PORT SIZE: 1/2" NPTF / PR. TESTING : 3000PSI	01
07	NIPPLE MATL.: ASTM A106 Gr.C SIZE: 3/4" NB-SCH 80	01
08	CAP MATL.: ASTM A105 SIZE: 3/4" NPTF	01
09	FOUR WAY VALVE MATL.: ASTM A105 / RATING CLASS 800 SIZE: (2 x 3/4" NB-SW) x (2 x 1/2" NPTF)	01
10	QUICK DISCONNECTING FITTING MATL.: SS 304 SIZE.:1/2" NPTM	01

COPY RIGHT AND CONFIDENTIAL
The information on this document is the property of Bharat Heavy Electricals Limited.
It must not be used directly or indirectly in anyway detrimental to the interest to the Company.

DATE

REVISION NO

REVISION NO	DATE

COPY RIGHT AND CONFIDENTIAL
The information on this document is the property of Bharat Heavy Electricals Limited.
It must not be used directly or indirectly in anyway detrimental to the interest to the Company.

A4 - 10

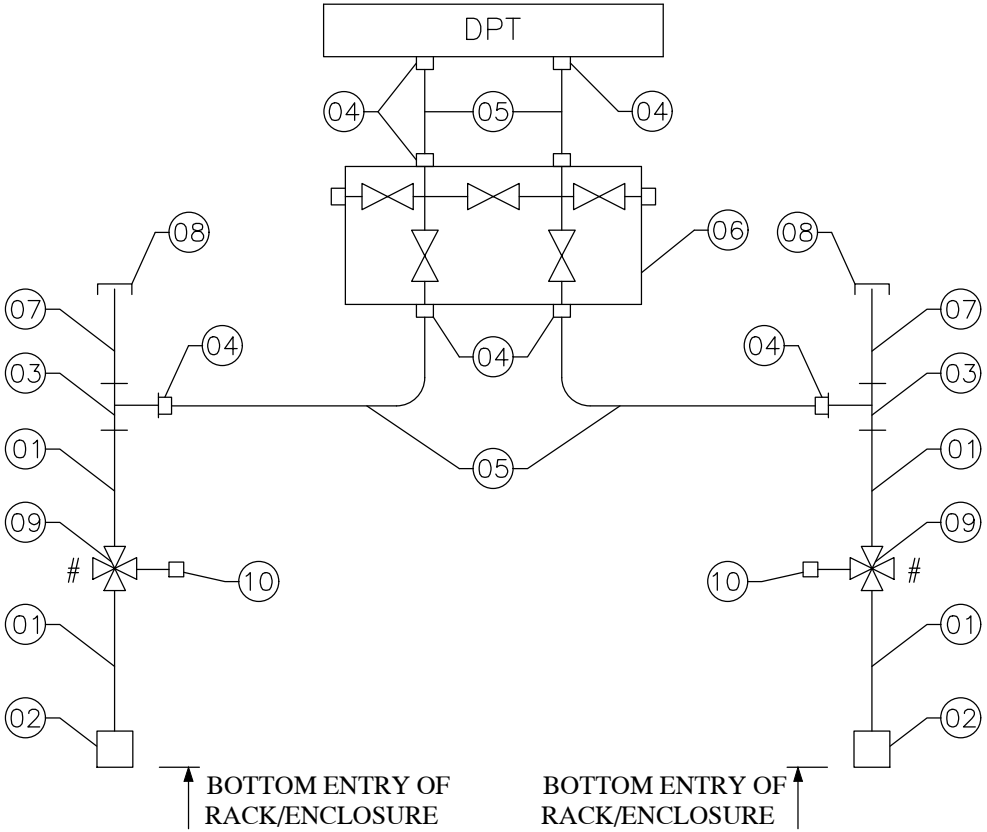

NOTES:

01. "TRANSMITTER ABOVE SOURCE"
02. FOR BILL OF MATERIAL REFER PAGE 27 OF 33
03. FOR INTERMITTANT PURGING REFER PAGE 32 & 33 OF 33

CE/416/NON-NTPC/RC/HUP

REV. NO. 00

ITEM NO.	ITEM DESCRIPTION	QTY / INST. (Nos.)
01	SEAMLESS PIPE MATL.: ASTM A106 Gr.C SIZE: 3/4" NB-SCH 80	A/R
02	BULKHEAD COUPLING / AS PER ANSI B16.11 MATL.: ASTM A105 SIZE: 3/4" NB-SW / CL : 3000 LBS	02
03	FORGED UNEQUAL TEE/AS PER ANSI B16.11 MATL.: ASTM A105 SIZE: 2 x 3/4" NB -SW X 1/2" NPTF / CL 3000LBS	02
04	MALE DFDC CONNECTOR MATL.: SS316 SIZE: 1/2" NPTM x TO SUIT 1/2" OD SS TUBE	08
05	SEAMLESS TUBE MATL.: A213 TP 316L SIZE: 1/2" OD x 1.13mm THK.	A/R
06	FIVE VALVE MANIFOLD WITH DRAIN PLUG BODY: SS316 PORT SIZE: 1/2" NPTF / PR. TESTING : 3000PSI	01
07	NIPPLE MATL.: ASTM A106 Gr.C SIZE: 3/4" NB-SCH 80	02
08	CAP MATL.: ASTM A105 SIZE: 3/4" NPTF	02
09	FOUR WAY VALVE MATL.: ASTM A105 / RATING CLASS 800 SIZE: (2 x 3/4" NB-SW) x (2 x 1/2" NPTF)	02
10	QUICK DISCONNECTING FITTING MATL.: SS 304 SIZE.:1/2" NPTM	02

COPY RIGHT AND CONFIDENTIAL
The information on this document is the property of Bharat Heavy Electricals Limited.
It must not be used directly or indirectly in anyway detrimental to the interest to the Company.

DATE

REVISION NO

REVISION NO	DATE	COPY RIGHT AND CONFIDENTIAL The information on this document is the property of Bharat Heavy Electricals Limited. It must not be used directly or indirectly in anyway detrimental to the interest to the Company.		

A4 – 10

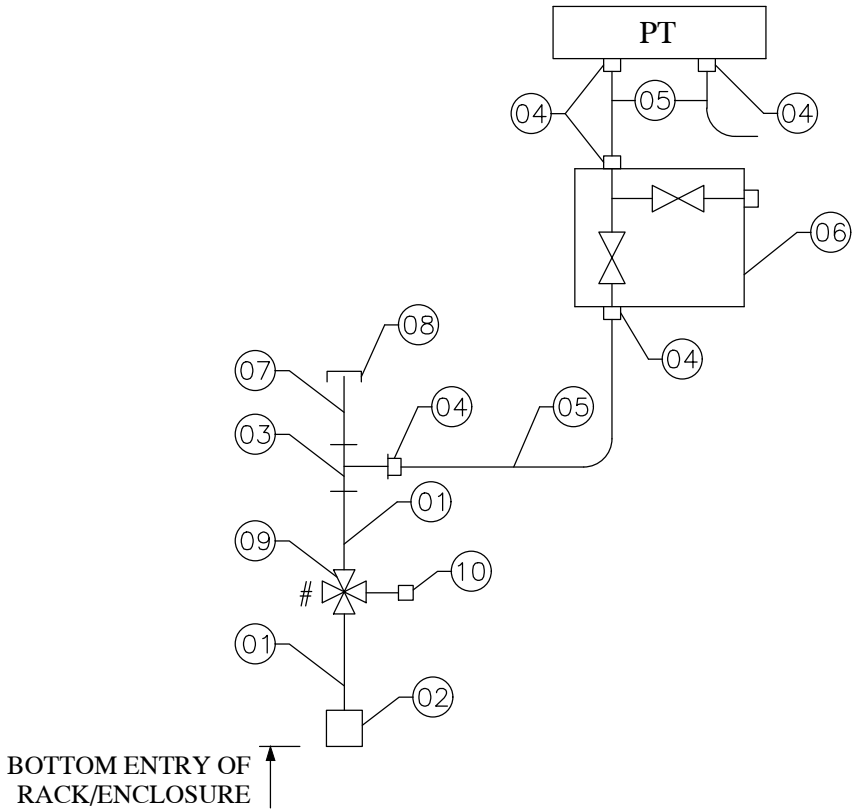

NOTES:

01. "TRANSMITTER ABOVE SOURCE"
02. FOR BILL OF MATERIAL REFER PAGE 29 OF 33
03. FOR INTERMITTANT PURGING REFER PAGE 32 & 33 OF 33

CE/416/NON-NTPC/RC/HUP

REV. NO. 00

PAGE NO.: 28 OF 33

ITEM NO	ITEM DESCRPTION	QNTY/INST. (Nos.)
01	SEAMLESS PIPE MATL: A335 P22 SIZE: 3/4" NB-SCH 80	A/R
02	BULKHEAD COUPLING / AS PER ANSI B16.11 MATL: ASTM A182 F22 SIZE: 3/4" NB-SW / CL: 3000	01
03	FORGED UNEQUAL TEE / AS PER ANSI B16.11 MATL: ASTM A182 F22 SIZE: 2 x 3/4" NB-SW X 1/2" NPTF / CL: 3000	01
04	MALE CONNECTOR MATL: SS316 SIZE: 1/2" NPTM x TO SUIT 1/2" OD SS TUBE	05
05	SEAMLESS TUBE MATL: ASTM A213 TP316L SIZE: 1/2" OD x 1.13mm THK	A/R
06	TWO VALVE MANIFOLD BODY: SS316 PORT SIZE: 1/2" NPTF / PR. TESTING: 3000 PSI	01
07	NIPPLE MATL: A335 P22 SIZE: 3/4" NB-SCH 80	01
08	CAP MATL: ASTM A182 F22 SIZE: 3/4" NPTF	01
09	FOUR WAY VALVE MATL.: ASTM A182 F22 / RATING CLASS 800 SIZE: (2 x 3/4" NB-SW) x (2 x 1/2" NPTF)	01
10	QUICK DISCONNECTING FITTING MATL.: SS 304 SIZE.:1/2" NPTM	01

COPY RIGHT AND CONFIDENTIAL
The information on this document is the property of Bharat Heavy Electricals Limited.
It must not be used directly or indirectly in anyway detrimental to the interest to the Company.

REVISION NO	DATE

COPY RIGHT AND CONFIDENTIAL
The information on this document is the property of Bharat Heavy Electricals Limited.
It must not be used directly or indirectly in anyway detrimental to the interest to the Company.

A4 - 10

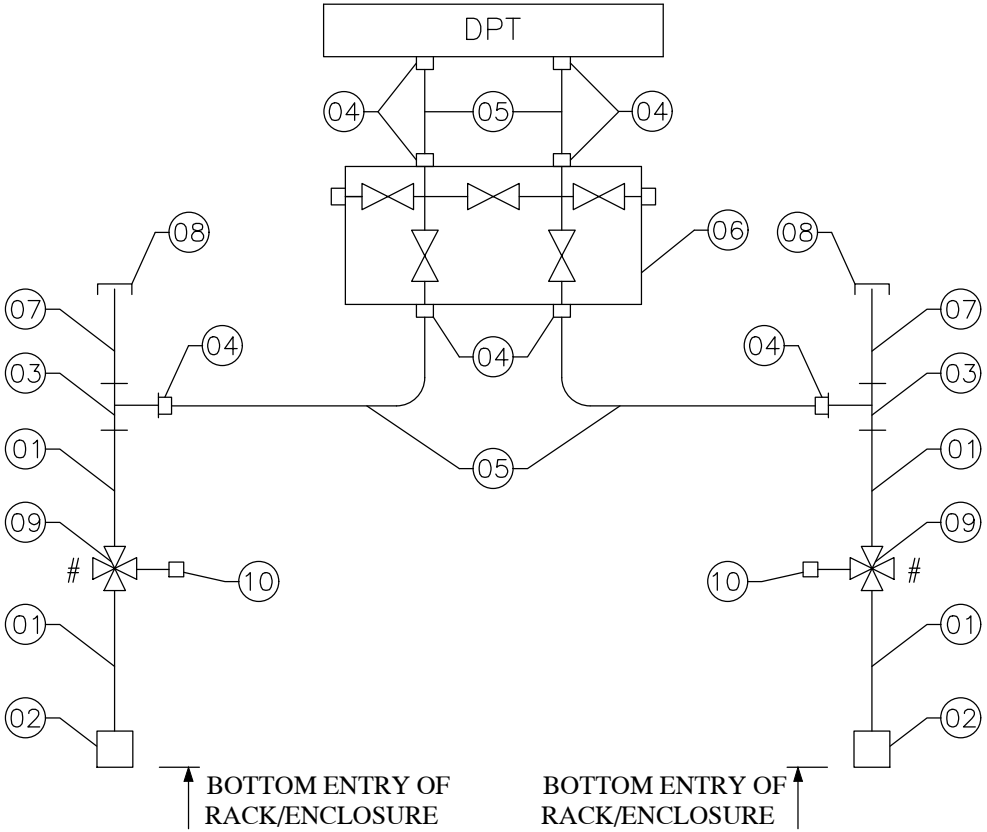

NOTES:

01. "TRANSMITTER ABOVE SOURCE"
02. FOR BILL OF MATERIAL REFER PAGE 31 OF 33
03. FOR INTERMITTANT PURGING REFER PAGE 32 & 33 OF 33

CE/416/NON-NTPC/RC/HUP

REV. NO. 00

ITEM NO	ITEM DESCRPTION	QNTY/INST. (Nos.)
01	SEAMLESS PIPE MATL: A335 P22 SIZE: 3/4" NB-SCH 80	A/R
02	BULKHEAD COUPLING / AS PER ANSI B16.11 MATL: ASTM A182 F22 SIZE: 3/4" NB-SW / CL: 3000	02
03	FORGED UNEQUAL TEE / AS PER ANSI B16.11 MATL: ASTM A182 F22 SIZE: 2 x 3/4" NB-SW X 1/2" NPTF / CL: 3000	02
04	MALE CONNECTOR MATL: SS316 SIZE: 1/2" NPTM x TO SUIT 1/2" OD SS TUBE	08
05	SEAMLESS TUBE MATL: ASTM A213 TP316L SIZE: 1/2" OD x 1.13mm THK	A/R
06	FIVE VALVE MANIFOLD BODY: SS316 PORT SIZE: 1/2" NPTF / PR. TESTING: 3000 PSI	01
07	NIPPLE MATL: A335 P22 SIZE: 3/4" NB-SCH 80	02
08	CAP MATL: ASTM A182 F22 SIZE: 3/4" NPTF	02
09	FOUR WAY VALVE MATL.: ASTM A182 F22 / RATING CLASS 800 SIZE: (2 x 3/4" NB-SW) x (2 x 1/2" NPTF)	02
10	QUICK DISCONNECTING FITTING MATL.: SS 304 SIZE.:1/2" NPTM	02

COPY RIGHT AND CONFIDENTIAL
The information on this document is the property of Bharat Heavy Electricals Limited.
It must not be used directly or indirectly in anyway detrimental to the interest to the Company.

REVISION NO	DATE

COPY RIGHT AND CONFIDENTIAL
The information on this document is the property of Bharat Heavy Electricals Limited.
It must not be used directly or indirectly in anyway detrimental to the interest to the Company.

A4 – 10

TYPICAL AIR PURGING SCHEME

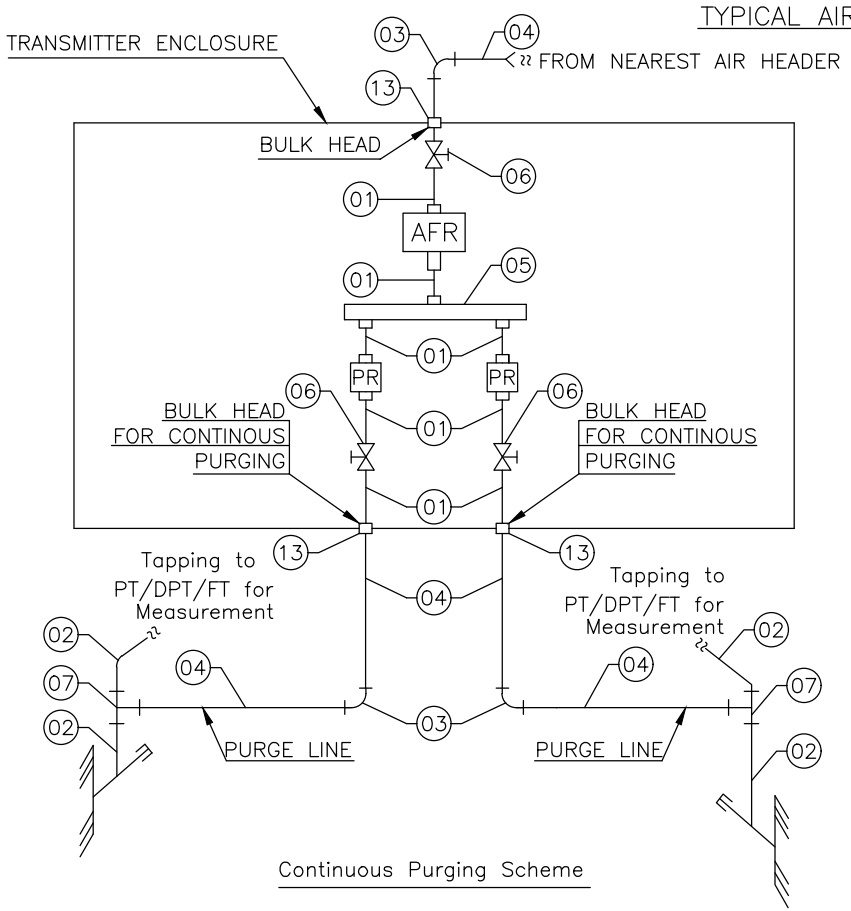

Continuous Purging Scheme

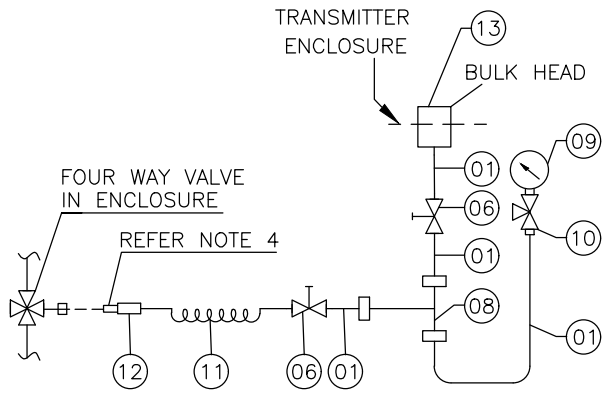

Intermittent Purging Scheme

NOTES:

01. ABBREVIATIONS

PT	–	PRESSURE TRANSMITTERS
DPT / FT	–	DIFF. PRESSURE/FLOW TRANSMITTERS
AFR	–	AIR FILTER REGULATOR
PR	–	PURGE ROTAMETER

02. ABOVE SCHEME IS TYPICAL. PURGE ROTAMETERS WILL BE ONE NO. FOR EACH OF PURGE LINE AS SHOWN.
03. AIR FILTER REGULATORS SHALL BE SET BETWEEN 0.4 TO 0.6 KG/CM2 APPROX.
04. THIS QUICK DISCONNECT FITTING IS CONNECTED TO FOUR WAY VALVE WHEREVER INTERMITTENT PURGING IS CALLED IN SCHEMES.
05. FOR BILL OF MATERIAL REFER PAGE 33 OF 33

ITEM NO.	ITEM DESCRIPTION
01	SEAMLESS TUBE MATL.: SS 316 SIZE: 1/2" OD TUBE X 1.1 mm THICK
02	SEAMLESS PIPE MATL.: ASTM A 106 Gr. C SIZE: 3/4" NB SCH 80
03	GALVANISED ELBOW MATL.: A 105 SIZE: 1/2" NPTF
04	GI PIPE MATL.: IS 1239 HEAVY GRADE SIZE: 1/2" NB
05	AIR HEADER MATL.: SS304 SIZE: 1" NB PIPE
06	BALL VALVE MATL.: A 105 SIZE: TO SUIT 1/2" OD SS TUBE
07	UNEQUAL TEE MATL.: A 105 SIZE: 2 X 3/4" NB–SW X 1/2" NPTF
08	EQUAL TEE BODY: SS316 PORT SIZE: TO SUIT 1/2" OD SS TUBE
09	PR. GAUGE CONNECTION:. 1/2" NPTM SIZE: 4" DIAL SIZE / RANGE : 0 – 10 Kg / Cm2
10	3 WAY GUAGE COCK MATL.:SS304 SIZE: 1/2" NPTF x TO SUIT 1/2" SS TUBE
11	NYLON HOSE WITH SS BRAIDING TO SUIT 1/2" END CONNECTION PR TESTING 10 kg/cm2
12	QUICK DISCONNECTING FITTING MATL:. SS304 SIZE: MALE END CONN. TO SUIT 1/2" OD CONNECTION
13	BULK HEAD UNION MATL:. ASTM A105 SIZE: 1/2" NPTF X 1/2" NPTF

COPY RIGHT AND CONFIDENTIAL
The information on this document is the property of Bharat Heavy Electricals Limited.
It must not be used directly or indirectly in anyway detrimental to the interest to the Company.

DATE

REVISION NO

A4-10		Ref : CE/416/LIE/LIR/OGA2
		Rev. : 00
		Page : 01 of 04

PROJECT: RATE CONTRACT FOR LIE/LIR

CUSTOMER: M/s TSGENCO , ADANI POWER

COPY RIGHT AND CONFIDENTIAL

THE INFORMATION ON THIS DOCUMENT IS THE PROPERTY OF BHARAT HEAVY ELECTRICALS LIMITED. IT MUST NOT BE USED DIRECTLY OR INDIRECTLY IN ANY WAY DETRIMENTAL TO THE INTEREST OF THE COMPANY.

SCHEMATIC DRAWINGS
FOR
LOCAL INSTRUMENT ENCLOSURE / RACKS
(LIE / LIR)

REVISIONS :	APPROVED BY		
	DIPTENDU GHOSH		
	PREPARED BY	ISSUED	DATE
	RAJESH LINGUTLA	416	09/07/24

FIRST ANGLE PROJECTION

(ALL DIMENSIONS ARE IN mm)

DRG. No. CE/416/LIE/LIR/OGA1

COPYRIGHT AND CONFIDENTIAL
THE INFORMATION ON THIS DOCUMENT IS THE PROPERTY OF BHARAT HEAVY ELECTRICALS LTD. IT MUST NOT BE USED DIRECTLY OR INDIRECTLY IN ANY WAY DETRIMENTAL TO THE INTEREST OF THE COMPANY.

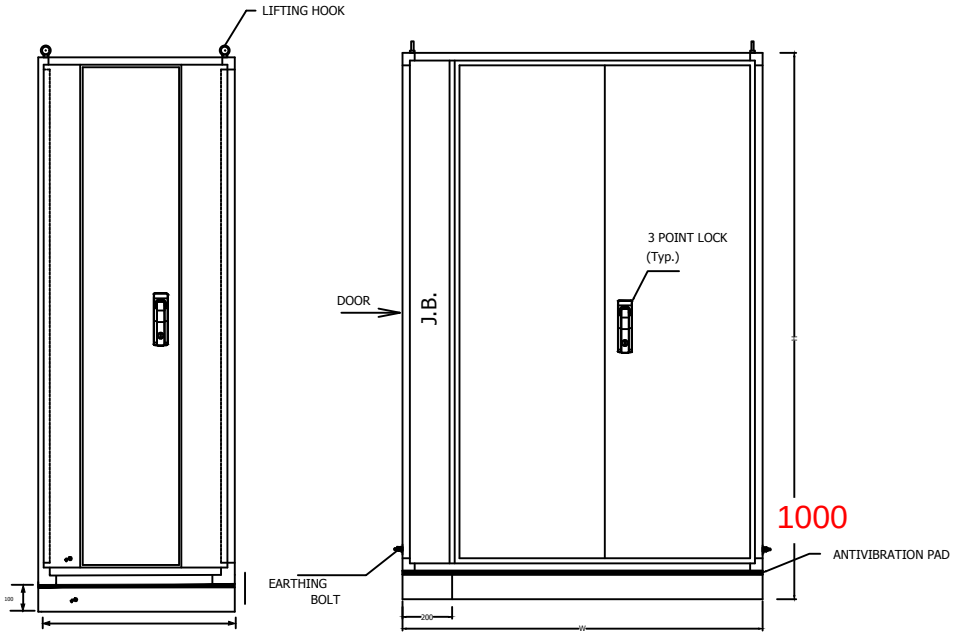

LH SIDE VIEW

FRONT VIEW

NOTES:–

1. ALL SHEETs ARE 3.0mm CRCA SHEET
2. ALL DOORS WILL BE FLUSH / CONCEALED TYPE
3. BASE FRAME SHALL BE MADE OF ISMC 100
4. BULK HEAD PLATE FOR TOP & BOTTOM SHALL BE PROVIDED
5. CABLE GLAND PLATE OF THICKNESS 3.0 mm. CRCA SHEET SHALL BE PROVIDED TOP AND BOTTOM OF J.B
6. ENCLOSURE SHALL BE OF IP–65 PROTECTION CLASS
7. TERMINAL SHALL BE PROVIDED IN SIDE THE J.B. AS PER TRANSMITTER GROUPING
8. DOORS SHALL BE THREE POINT LOCKING FOR FRONT AND REAR DOOR AND SIDE DOOR LEAF
9. GASKET SHALL BE PROVIDED BETWEEN BULK HEAD PLATE & ENCLOSURE
10. EARTH BUS BAR 25x6mm TINNED COPPER SHALL BE USED
11. 2 Nos. CFL 11W,230V AC WITH FIXTURE SHALL BE PROVIDED
12. DRAIN PIPE SLOPE WILL BE 1 : 25 APPROX.
13. POWER SOCKET SHALL BE PROVIDED IN J.B. OF ENCLOSURE

LIE TYPE	H	W	D
A	2200	1450	1000
B	2200	1100	1000
C	2200	800	1000

PROD / PROJ :

CUSTOMER:

REV.	DATE	ALTERED / CHECKED / APPROVED	REV.	DATE	ALTERED / CHECKED / APPROVED

	NAME	SIGN	DATE
DRAWN	HKS		15.04.2015
CHECKED	RKL		15.04.2015
APPROVED	AM		15.04.2015

DEPT. BPE | CODE 416

BHARAT HEAVY ELECTRICALS LIMITED.
ELECTRONICS DIVISION, BANGALORE

TITLE: OGA–FOR–LIE

No. OF SHEETS: 04

SHEET No.: 02

WBS. No.

DRG. No. CE/416/LIE/LIR/OGA1

REV 00

REF. DRG. No.

SIGN. & DATE

INVENTORY No.

FORM No. A3–03

A3 SIZE

FIRST ANGLE PROJECTION

(ALL DIMENSIONS ARE IN mm)

DRG. No. CE/416/LIE/LIR/OGA1

COPYRIGHT AND CONFIDENTIAL
THE INFORMATION ON THIS DOCUMENT IS THE PROPERTY OF BHARAT HEAVY ELECTRICALS LTD. IT MUST NOT BE USED DIRECTLY OR INDIRECTLY IN ANY WAY DETRIMENTAL TO THE INTEREST OF THE COMPANY.

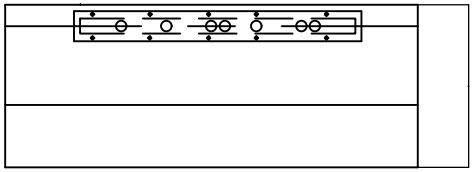

TOP VIEW

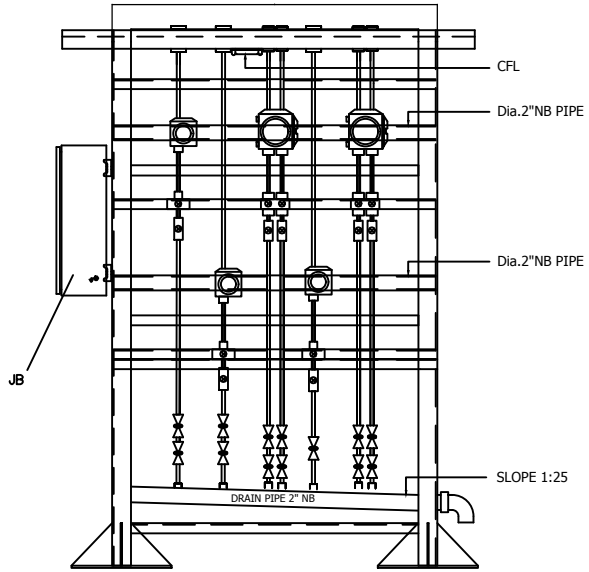

FRONT VIEW

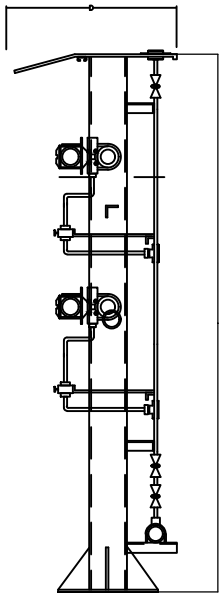

SIDE VIEW

NOTES:

1. JB TO BE LOCATED ON ONE SIDE OF THE LIR.
2. LIR's ARE WITH 2 LEGS.
3. SUPPORTING LEG SHALL BE MADE OF CHANNEL
4. BULK HEAD PLATE SHALL BE PROVIDED AT THE TOP
5. GASKET SHALL BE PROVIDED BETWEEN BULK HEAD PLATE & RACK
6. EARTH BUS BAR 25x6mm COPPER SHALL BE USED
7. 1 No CFL 11W,230V AC WITH FIXTURE SHALL BE PROVIDED
8. POWER SOCKET SHALL BE PROVIDED IN J.B. OF RACK
9. CANAPY ASSEMBLY WITH 3 MM THICK CRCA SHEET
10. TERMINALS SHALL BE PROVIDED IN SIDE THE JB AS PER GROUPING PROVIDED

LIR TYPE	H	W	D
A	2200	1400	650
B	2200	1100	650
C	1600	800	650
D	2200	1600	650

PROD / PROJ : –

CUSTOMER: –

REV.	DATE	ALTERED –	REV.	DATE	ALTERED –
–	–	CHECKED –	–	–	CHECKED –
		APPROVED –			APPROVED –

	NAME	SIGN	DATE
DRAWN	HKS		15.04.2015
CHECKED	RKL		15.04.2015
APPROVED	AM		15.04.2015

DEPT. BPE | CODE 416

BHARAT HEAVY ELECTRICALS LIMITED.
ELECTRONICS DIVISION, BANGALORE

TITLE: OGA–FOR–LIR

No. OF SHEETS 04

SHEET No. 04

WBS. No. –

DRG. No. CE/416/LIE/LIR/OGA1

REV 00

REF. DRG. No. FLREF

SIGN. & DATE

INVENTORY No.

FORM No. A3–03

A3 SIZE

FIRST ANGLE PROJECTION

(ALL DIMENSIONS ARE IN mm)

DRG. No. CE/416/LIE/LIR/OGA1

COPYRIGHT AND CONFIDENTIAL
THE INFORMATION ON THIS DOCUMENT IS THE PROPERTY OF BHARAT HEAVY ELECTRICALS LTD. IT MUST NOT BE USED DIRECTLY OR INDIRECTLY IN ANY WAY DETRIMENTAL TO THE INTEREST OF THE COMPANY.

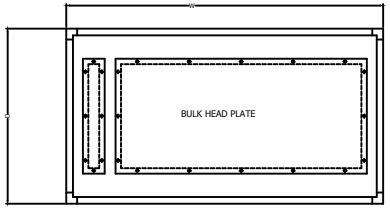

TOP VIEW

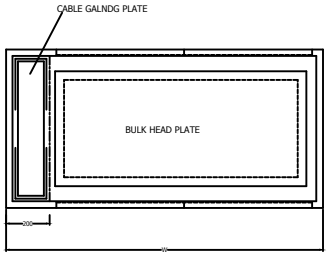

BOTTOM VIEW

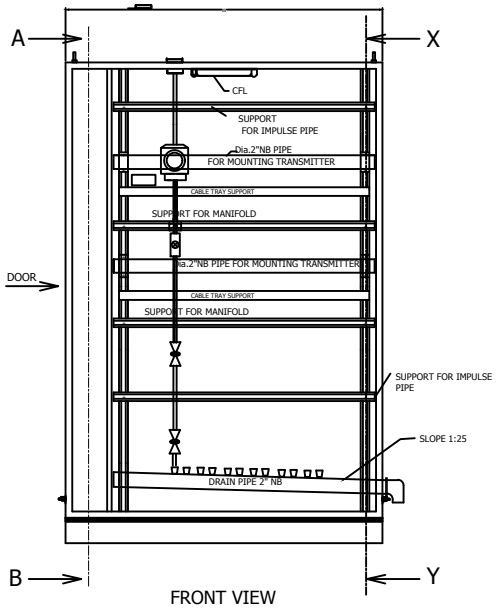

FRONT VIEW

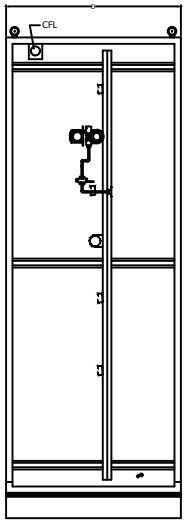

SIDE VIEW FROM X-Y

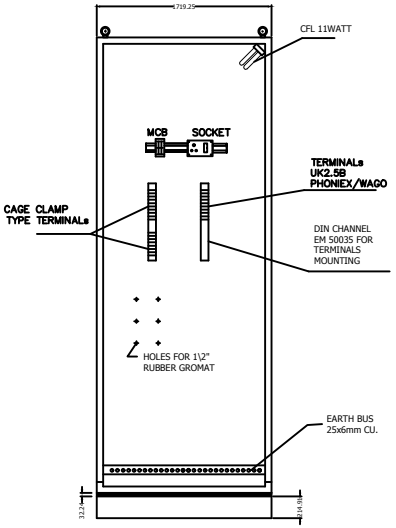

SIDE VIEW FROM A-B

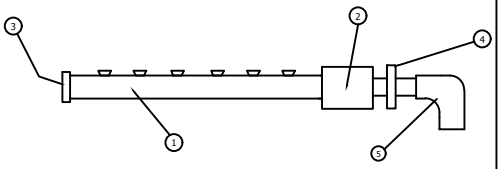

DRAIN PIPE

ITEM	DESCRIPTION	QTY.
1	2" NB ASTM A-106' SCH80/GR-C	A/R
2	2" NBSW X 1" NPT(F) COUPLING CS ASTM A105	1No.
3	2" S.W.CAP,CS ASTM A105	1No.
4	1" NPT (M) X1" BSP(M) HEX. COUPLING, CS ASTM105	1No.
5	1" BSP (F) ELBOW, CS ASTM A105	1No.

PROD / PROJ :

CUSTOMER:

REV.	DATE	ALTERED	REV.	DATE	ALTERED
		CHECKED			CHECKED
		APPROVED			APPROVED

	NAME	SIGN	DATE
DRAWN	HKS		15.04.2015
CHECKED	RKL		15.04.2015
APPROVED	AM		15.04.2015

DEPT.	CODE
BPE	416

BHARAT HEAVY ELECTRICALS LIMITED.
ELECTRONICS DIVISION, BANGALORE

TITLE: OGA–FOR–LIE

No. OF SHEETS: 04

SHEET No.: 03

WBS. No.

DRG. No. CE/416/LIE/LIR/OGA1

REV 00

REF. DRG. No.

SIGN. & DATE

INVENTORY No.

FORM No. A3–03

A3 SIZE

PROJECT: RATE CONTRACT FOR LIE/LIR

CUSTOMER: M/s TSGENCO, ADANI POWER

COMPONENT VENDOR LIST

COPY RIGHT AND CONFIDENTIAL

THE INFORMATION ON THIS DOCUMENT IS THE PROPERTY OF BHARAT HEAVY ELECTRICALS LIMITED. IT MUST NOT BE USED DIRECTLY OR INDIRECTLY IN ANY WAY DETRIMENTAL TO THE INTEREST OF THE COMPANY.

REVISIONS :

APPROVED BY		
DIPTENDU GHOSH		
PREPARED BY	ISSUED	DATE
RAJESH LINGUTLA	416	09/07/24

COPY RIGHT AND CONFIDENTIAL
THE INFORMATION ON THIS DOCUMENT IS THE PROPERTY OF BHARAT HEAVY ELECTRICALS LIMITED . IT MUST NOT BE USED DIRECTLY OR INDIRECTLY IN ANY WAY DETRIMENTAL TO THE INTEREST OF THE COMPANY.

SUB COMPONENT VENDOR LIST

Sl No	Item Description	Approved Vendors
1	Socket Weld Fittings	PRECISION ENGG INDUSTRIES, MUMBAI
		V.K.INDUSTRIES,BANGALORE
		VIKAS INDUSTRIAL PRODUCTS,NOIDA
		EXCEL HYDRO-PNEUMATICS PVT LTD,MUMBAI (Approved for Adhani projects)
		METPRESS ENGINEERING WORKS,KOLKATA (Approved for Adhani projects)
		BALDOTA VALVE AND FITTINGS PVT LTD,MUMBAI (Approved for Adhani projects)
		PMT ENGINEERS,AHMEDABAD
		FLOWTECH, KOLKATA.
		PANAM ENGINEERS LTD,MUMBAI
		AURA INC,NEW DELHI
		PAUL INDUSTRIES,HOWRAH
		ARCELLOR CONTROLS ,AHMEDABAD
		HP VALVES & FITTINGS (INDIA) PVT. LTD,CHENNAI (Approved for Adhani projects)
		NAV DURGA FORGING AND FITTINGS PVT LTD, THANE, MAHARASTRA.
		PRIME ENGINEERS,MUMBAI
		DYNA FLUID VALVES AND FLOW CONTROLS,UDYAMBAG,BELGAUM
		ARYA CRAFTS & ENGINEERING PVT. LTD,MUMBAI
2	Compression Fitting	PRECISION ENGG INDUSTRIES, MUMBAI (Approved for Adhani projects)
		EXCEL HYDRO-PNEUMATICS PVT LTD, MUMBAI
		METPRESS ENGINEERING WORKS, KOLKATA
		ASTEC VALVE & FITTINGS PVT. LTD., MUMBAI
		FLUID CONTROLS PVT. LTD,PUNE
		PANAM ENGINEERS LTD,MUMBAI
		AURA INC, NEW DELHI
		HP VALVES & FITTINGS (INDIA) PVT. LTD, CHENNAI
		PMT ENGINEERS,AHMEDABAD
		PRIME ENGINEERS,MUMBAI
		ARCELLOR CONTROLS ,AHMEDABAD
		ARYA CRAFTS & ENGINEERING PVT. LTD,MUMBAI (Approved for Adhani projects)
		SWAGELOCK,USA
		DYNA FLUID VALVES AND FLOW CONTROLS,UDYAMBAG,BELGAUM
		FLOWTECH. KOLKATA.
		PARKER HANNIFIN INDIA PVT. LTD.,CHENGAL PATTU,TAMILANADU (Approved for Adhani projects)
		FLUID FIT ENGINEERING PVT LTD, PALGHAR, MAHARASHTRA.
3	Instrument Valves	BHARAT HEAVY ELECTRICALS LIMITED VALVES DIVISION,TIRUCHIRAPALLI,TAMILANADU. (Approved for Adhani projects)
		PRECISION ENGG INDUSTRIES, MUMBAI
		EXCEL HYDRO-PNEUMATICS PVT LTD,MUMBAI (Approved for Adhani projects)
		METPRESS ENGINEERING WORKS,KOLKATA (Approved for Adhani projects)
		BALDOTA VALVE AND FITTINGS PVT LTD,MUMBAI
		PMT ENGINEERS,AHMEDABAD
		AURA INC,NEW DELHI
		HP VALVES & FITTINGS (INDIA) PVT. LTD,CHENNAI (Approved for Adhani projects)
		FLUID CONTROLS PVT LTD,PUNE
		FLOWTECH,KOLKATA.
		DYNA FLUID VALVES AND FLOW CONTROLS,UDYAMBAG,BELGAUM
		INSTRUMENTATION LIMITED,PALGHAT (Approved for Adhani projects)
		BHARAT HEAVY ELECTRICALS LIMITED VALVES DIVISION,TIRUCHIRAPALLI,TAMILANADU.
4	Air Filter Regulator	PLACKA INSTRUMENTS INDIA PVT LTD CHENNAI (Approved for Adhani projects)
		DIVYA CONTROL ELEMENTS PVT LTD,VADODARA
		PARKER ,HANNIFIN,LEBANON
		SHAVO NORGEN, MUMBAI (Approved for Adhani projects)

COPY RIGHT AND CONFIDENTIAL
THE INFORMATION ON THIS DOCUMENT IS THE PROPERTY OF BHARAT HEAVY ELECTRICALS LIMITED . IT MUST NOT BE USED DIRECTLY OR INDIRECTLY IN ANY WAY DETRIMENTAL TO THE INTEREST OF THE COMPANY.

SUB COMPONENT VENDOR LIST

Sl No	Item Description	Approved Vendors
5	Valve Manifolds	PRECISION ENGG INDUSTRIES, MUMBAI
		EXCEL HYDRO-PNEUMATICS PVT LTD,MUMBAI (Approved for Adhani projects)
		METPRESS ENGINEERING WORKS,KOLKATA (Approved for Adhani projects)
		BALDOTA VALVE AND FITTINGS PVT LTD,MUMBAI (Approved for Adhani projects)
		ASTEC VALVE & FITTINGS PVT. LTD,MUMBAI
		FLOWTECH,KOLKATA.
		AURA INC,NEW DELHI
		PMT ENGINEERS,AHMEDABAD
		HP VALVES & FITTINGS (INDIA) PVT. LTD,CHENNAI (Approved for Adhani projects)
		MICRO PRECISION PRODUCTS PVT LTD,FARIDABAD,HARYANA. (Approved for Adhani projects)
		FLUID CONTROLS LIMITED ,PUNE
		ARCELLOR CONTROLS,AHMEDABAD.
		PRIME ENGINEERS,MUMBAI
		Parker HANNIFIN INDIA PVT. LTD,LEBANON (D407131-Super technical dealer for Parker)
		VIPAL ENTEPRISES PVT LTD,MUMBAI.
		DYNA FLUID VALVES AND FLOW CONTROLS,UDYAMBAG,BELGAUM
		ARYA CRAFTS & ENGINEERING PVT. LTD,MUMBAI
		SHREE MARUTI INSTRUMENTS PVT LTD, GUJARAT.
		FLUID FIT ENGINEERING PVT LTD, PALGHAR, MAHARASHTRA.
6	Impulse Pipes / Seamless Tube	BHARAT HEAVY ELECTRICALS LTD, TRICHY (Approved for Adhani projects)
		Mahrastra Seamless, Raigarh (CS Pipes Only)
		HEAVY MEATAL TUBES, AHMADABAD (only for CS Pipes & SS Pipes &Tubes)
		RATNAMANI METALS & TUBES LTD, AHMADABAD (only for SS Pipes &Tubes) (Approved for Adhani projects)
		NIPPON STEEL & SUMITOMO METALS CORPORATION ,JAPAN (Approved for Adhani projects)
		TPS TECHNITUBE ROHREN WERKE GMBH, GERMANY
		JINDAL SAW, CHENNAI (CS PIPES AND AS PIPES) (Approved for Adhani projects)
		SHUBHALAKSHMI METALS & TUBES LTD,MUMBAI (only for SS Pipes &Tubes)
		VENUS PIPES AND TUBES LIMITED, DHANETI, KUTCH, GUJARAT. only for SS Pipes &Tubes).
		MBM TUBES PVT LTD,CHATTRAL,GUJARAT (only for SS Pipes &Tubes).
		SURAJ STAINLESS LIMITED,AHMEDABAD (only for SS Pipes &Tubes).
		ISMT, AHAMADNAGAR (CS PIPES ONLY AND AS PIPES) (Approved for Adhani projects)
		MAXIM TUBES COMPANY PVT LTD, AHMEDABAD.(SS PIPES AND TUBES) (only for SS Pipes &Tubes) (Approved for Adhani projects)
		TUBACEX PRAKASH INDIA PVT LTD, UMERGOAN, GUJARAT. (only for SS Pipes &Tubes) (Approved for Adhani projects)

COPY RIGHT AND CONFIDENTIAL
THE INFORMATION ON THIS DOCUMENT IS THE PROPERTY OF BHARAT HEAVY ELECTRICALS LIMITED . IT MUST NOT BE USED DIRECTLY OR INDIRECTLY IN ANY WAY DETRIMENTAL TO THE INTEREST OF THE COMPANY.

SUB COMPONENT VENDOR LIST

Sl No	Item Description	Approved Vendors
7	Instrument cables	POLYCAB ,DAMAN (Approved for Adhani projects)
		GOYELEN FIBERS INDIA PVT LTD, SILVASSA.
		TEMPSENS INDIA PVT LTD, UDAIPUR.
		PARAMOUNT, KHUSKHERA (Approved for Adhani projects)
		Cords cable industries ltd
		KEI, BHIWADI (Approved for Adhani projects)
		KEC INTERNATIONAL, BENGALURU. (Approved for Adhani projects)
		CMI, FARIDABAD
		ADVANCE CABLES PVT LTD, BENGALURU.
		GEMS CAB INDUSTRIES LTD, BHIWADI. (Approved for Adhani projects)
		APAR INDUSTRIES LTD, VALSAD. (Approved for Adhani projects)
		SUYOG ELECTRICALS LTD, HALOL(GUJARAT). (Approved for Adhani projects)
		SPECIAL CABLES PVT LTD, RUDRAPUR.
		TC COMMUNIATION, GHAZIABAD.
		DELTON, FARIDABAD (Approved for Adhani projects)
		Udey Pyro cables
		ELKAY TELE LINKS, FARIDABAD.
		BMI Cables ltd, Alwar
		GUPTA POWER INFRASTRUCTURE LTD, KHURDHA.
		THERMOCABLES LTD,HYDERBAD/MAHBOOB NAGAR (Approved for Adhani projects)

Note: Above subcomponent Vendor list is tentative. Bidders can propose additional sub component vendors for above items by submitting credentials like PO Copies, Catalog, Manufacturing and Testing facilities etc. Final sub component vendor list will be decided by Customer during detailed engineering. However, if same is not approved by customer, vendors to provide sub component makes from the approved list without any price impact.

PROJECT: RATE CONTRACT FOR LIE/LIR

CUSTOMER: M/s TSGENCO , ADANI POWER

TYPICAL QUALITY CHECK LIST

COPY RIGHT AND CONFIDENTIAL

THE INFORMATION ON THIS DOCUMENT IS THE PROPERTY OF BHARAT HEAVY ELECTRICALS LIMITED. IT MUST NOT BE USED DIRECTLY OR INDIRECTLY IN ANY WAY DETRIMENTAL TO THE INTEREST OF THE COMPANY.

REVISIONS :

APPROVED BY		
DIPTENDU GHOSH		
PREPARED BY	**ISSUED**	**DATE**
RAJESH LINGUTLA	416	09/07/24

	MANUFACTURER'S NAME & ADDRESS	MANUFACTURING QUALITY PLAN	
		ITEM : LOCAL INSTRUMENT ENCLOSURE & LOCAL INSTRUMENT RACK	QP Ref NO.: CE/416/LIE-LIR/QP REV. : 00 DT. :09.07.2024 PAGE : 02 OF 06

S. NO.	COMPONENTS & OPERATIONS	CHARACTERISTICS	CLASS	TYPE OF CHECK	QUANTUM OF CHECK	REFERENCE DOCUMENT	ACCEPTANCE NORMS	FORMAT OF RECORD	AGENCY D*	M	C	E	REMARKS
1	2	3	4	5	6	7	8	9		**10			11
(A)	***MATERIAL***												
1	CRCA SHEET	A) MATERIAL	MAJOR	CHEMICAL COMPOSITION	SAMPLE	IS-513 APP.DRG	IS-513	M.T.C./Q.A.REP.		V	V	V	
		B) THICKNESS	MAJOR	MEASUREMENT	100%	APP.DRG	APP.DRG	M.T.C./Q.A.REP.		P	V	V	
		C) HARDNESS	MAJOR	STRENGTH	SAMPLE	IS-513	IS-513	M.T.C./Q.A.REP.		V	V	V	
		D) SURFACE FINISH	MAJOR	VISUAL	100%	IS-513	IS-513	M.T.C./Q.A.REP.		P	V	V	
2	MS C- CHANNELS / MS ANGLE	A) DIMENSION	MAJOR	VISUAL	100%	APP.DRG/ F.S.	APP.DRG/ F.S.	M.T.C./Q.A.REP.		P	V	V	
		B) SURFACE DEFECTS	MAJOR	VISUAL	100%	APP.DRG/ F.S.	APP.DRG/ F.S.	M.T.C./Q.A.REP.		V	V	V	
		C) STRAIGHTNESS	MAJOR	MESUERMENT	100%	APP.DRG/ F.S.	APP.DRG/ F.S.	M.T.C./Q.A.REP.		V	V	V	
3	GASKET	A) DIMENSION	MAJOR	MEASUREMENT	SAMPLE	APP.DRG/ F.S.	APP.DRG/ F.S.	M.T.C./Q.A.REP.		P	V	V	
		B) HARDNESS/SHORE HARDNESS	MAJOR	MEASUREMENT	SAMPLE	APP.DRG/ F.S.	APP.DRG/ F.S.	M.T.C.		V	V	V	
4	TERMINALS	A) TYPE, SIZE & MAKE	MAJOR	VISUAL	100%	APP.DRG	APP.DRG	M.T.C./Q.A.REP.		P	V	V	

		LEGEND : * RECORDS, INDENTIFIED WITH `TICK' SHALL BE ESSENTIALLY INCLUDED BY CONTRACTOR IN QA DOCUMENTATION. ** M : MANUFACTURER/ SUBCONTRACTOR C: CONTRACTOR/ NOMINATED INSPECTION AGENCY E : END USER INDICATE `P' PERFORM, `W' WITNESS AND `V' VERIFICATION AS APPROPRIATE "CHP" END USER SHALL IDENTIFIED IN COLUMN `E'	FOR END USER :	DOC. NO.
MANUFACTURER /SUBCONTRACTOR	CONTRACTOR			
SIGNATURE			REVIEWED BY	NAME & SIGN OFAPPROVING AUTHORITY WITH SEAL

	MANUFACTURER'S NAME & ADDRESS	MANUFACTURING QUALITY PLAN	
		ITEM : LOCAL INSTRUMENT ENCLOSURE & LOCAL INSTRUMENT RACK	QP Ref NO.: CE/416/LIE-LIR/QP REV. : 00 DT. : 09.07.2024 PAGE : 03 OF 06

S. NO.	COMPONENTS & OPERATIONS	CHARACTERISTICS	CLASS	TYPE OF CHECK	QUANTUM OF CHECK	REFERENCE DOCUMENT	ACCEPTANCE NORMS	RECORD		M	C	E	REMARKS
1	2	3	4	5	6	7	8	9	D*		**10		11
5	PVC WIRE/ CABLE	A) TYPE, SIZE, MAKE	MAJOR	MEASUREMENT	SAMPLE	IS 694/APPD. APP.DRG	IS 694/APPD. APP.DRG	M.T.C./Q.A.REP.		P	V	V	
6	PAINT	A) SHADE	MAJOR	VISUAL	SAMPLE	APP. DRG	APP. DRG	M.T.C./Q.A.REP.		P	V	V	
		B) FINISH	MAJOR	VISUAL	SAMPLE	APP. DRG	APP. DRG	M.T.C./Q.A.REP.		P	V	V	
7	FLEXIBLE CONDUIT / M.S. CABLE TRAY	A) TYPE, SIZE & MAKE	MAJOR	VISUAL	SAMPLE	APP.DRG	APP.DRG	M.T.C./Q.A.REP.		P	V	V	
(B)	***COMPONENTS ****												* TYPE / MODEL /RANGE OF COMPONENTS AS PER BOM OF LIE/ LIR .
1	VALVES, MANIFOLDS	MECHANICAL	MAJOR	A)CHEM. TEST	SAMPLE	SUPPLIER CAT./ APP.DRG	SUPPLIER CAT./ APP.DRG	M.T.C./Q.A.REP.		V	V	V	
				B)FUNCTIONAL	100%	-DO-	-DO-	M.T.C./Q.A.REP.		P	V	V	
				C) DIMENSION	100%/SAM.	-DO-	-DO-	M.T.C./Q.A.REP.		P	V	V	
				D)HYDROSTA-TIC	10%	-DO-	-DO-	M.T.C./Q.A.REP.		V	V	V	
2	FITTINGS	MECHANICAL	MAJOR	A)CHEM. TEST	SAMPLE	-DO-	-DO-	M.T.C./Q.A.REP.		V	V	V	
				B) DIMENSION	100%/SAM.	-DO-	-DO-	M.T.C./Q.A.REP.		P	V	V	
				C)HYDROSTA-TIC	10%	-DO-	-DO-	M.T.C./Q.A.REP.		V	V	V	
3.a	PIPES	MECHANICAL	MAJOR	A)CHEM. & PHY. TEST	SAMPLE	-DO-	-DO-	M.T.C./Q.A.REP. M.T.C./Q.A.REP.		V	V	V	
				B) DIMENSION	100%/ SAM.	-DO-	-DO-	M.T.C./Q.A.REP.		P	V	V	

		LEGEND : * RECORDS, INDENTIFIED WITH `TICK' SHALL BE ESSENTIALLY INCLUDED BY CONTRACTOR IN QA DOCUMENTATION. ** M : MANUFACTURER/ SUBCONTRACTOR C: CONTRACTOR/ NOMINATED INSPECTION AGENCY E : END USER INDICATE `P' PERFORM, `W' WITNESS AND `V' VERIFICATION AS APPROPRIATE "CHP" END USER SHALL IDENTIFIED IN COLUMN `E'	FOR END USER :	DOC. NO.
MANUFACTURER /SUBCONTRACTOR	CONTRACTOR			
SIGNATURE			REVIEWED BY	NAME & SIGN OFAPPROVING AUTHORITY WITH SEAL

MANUFACTURER'S NAME & ADDRESS	MANUFACTURING QUALITY PLAN	
	ITEM : LOCAL INSTRUMENT ENCLOSURE & LOCAL INSTRUMENT RACK	QP Ref NO.: CE/416/LIE-LIR/QP REV. : 00 DT. : 09.07.2024 PAGE : 04 OF 06

S. NO.	COMPONENTS & OPERATIONS	CHARACTERISTICS	CLASS	TYPE OF CHECK	QUANTUM OF CHECK	REFERENCE DOCUMENT	ACCEPTANCE NORMS	RECORD	D*	M	C	E	REMARKS
1	2	3	4	5	6	7	8	9		**10			11
3.b	TUBES	MECHANICAL	MAJOR	A)CHEM. & PHY. TEST	SAMPLE	SUPPLIER CAT./ APP.DRG	SUPPLIER CAT./ APP.DRG	M.T.C./Q.A.REP.		V	V	V	
				B) DIMENSION	100%	-DO-	-DO-	M.T.C./Q.A.REP.		P	V	V	
				C) HYDROSTA-TIC	10%	-DO-	-DO-	M.T.C./Q.A.REP.		P	V	V	
(C)	**INPROCESS**												
1	FABRICATED/CUBICLE AND COMPONENTS	A) DIMENSION	CRITICAL	MEASUREMENT	100%	APP.DRG	APP.DRG	Q.A. REPORT		P	V	V	
		B) LIFTING FACILITY	CRITICAL	VISUAL	100%	APP.DRG	APP.DRG	Q.A. REPORT		P	V	V	
		C) CABLE ENTRY	CRITICAL	VISUAL	100%	APP.DRG	APP. APP.DRG	Q.A. REPORT		P	V	V	
		D) STRAIGHTNESS / WAVINESS	CRITICAL	VISUAL	100%					P	V	V	
		E) GASKET ARGMNT.	CRITICAL	VISUAL	100%	APP.DRG	APP.DRG	Q.A. REPORT		P	V	V	
		F) DEBURRING	CRITICAL	VISUAL	100%	APP.DRG	APP.DRG	Q.A. REPORT		P	V	V	
		G) WELDING	CRITICAL	VISUAL	100%	APP.DRG	APP.DRG	Q.A. REPORT		P	V	V	
		H) REMOVAL OF WELDING SLAGS	CRITICAL	VISUAL	100%	APP.DRG	APP.DRG	Q.A. REPORT		P	V	V	

		LEGEND : * RECORDS, INDENTIFIED WITH `TICK' SHALL BE ESSENTIALLY INCLUDED BY CONTRACTOR IN QA DOCUMENTATION. ** M : MANUFACTURER/ SUBCONTRACTOR C: CONTRACTOR/ NOMINATED INSPECTION AGENCY E : END USER INDICATE `P' PERFORM, `W' WITNESS AND `V' VERIFICATION AS APPROPRIATE "CHP" END USER SHALL IDENTIFIED IN COLUMN `E'	FOR END USER :
MANUFACTURER /SUBCONTRACTOR	CONTRACTOR		
SIGNATURE			REVIEWED BY

DOC. NO.

NAME & SIGN OFAPPROVING AUTHORITY WITH SEAL

	MANUFACTURER'S NAME & ADDRESS	MANUFACTURING QUALITY PLAN	
		ITEM : LOCAL INSTRUMENT ENCLOSURE & LOCAL INSTRUMENT RACK	QP Ref NO.: CE/416/LIE-LIR/QP REV. : 00 DT. : 09.07.2024 PAGE : 05 OF 06

S. NO.	COMPONENTS & OPERATIONS	CHARACTERISTICS	CLASS	TYPE OF CHECK	QUANTUM OF CHECK	REFERENCE DOCUMENT	ACCEPTANCE NORMS	FORMAT OF RECORD		AGENCY M	C	E	REMARKS
1	2	3	4	5	6	7	8	9	D*	**10			11
2	PRETREATMENT (7 TANK PROCESS)	A) DEGREASING	CRITICAL	VISUAL	100%	IS- 6005/F.S.	IS- 6005/F.S.	Q.A. REPORT		P	V	V	
		B) DERUSTING	CRITICAL	VISUAL	100%	IS- 6005/F.S.	IS- 6005/F.S.	Q.A. REPORT		P	V	V	
		C) PHOSPHATISING	CRITICAL	MEASUREMENT	100%	IS- 6005/F.S.	IS- 6005/F.S.	Q.A. REPORT		P	V	V	
		D) PASSIVATION	CRITICAL	VISUAL	100%	IS- 6005/F.S.	IS- 6005/F.S.	Q.A. REPORT		P	V	V	
3	SURFACE PREPARA- -TION & PAINTING	A) PRIMER(2 COATS)	CRITICAL	VISUAL	100%	APP.DRG	APP.DRG	Q.A.REPORT		P	V	V	
		B) SURFACER	CRITICAL	VISUAL	100%	APP.DRG	APP.DRG	Q.A.REPORT		P	V	V	
		C) FINAL PAINTING	CRITICAL	VISUAL	100%	APP.DRG	APP.DRG	Q.A.REPORT		P	V	V	
		D) THICKNESS	CRITICAL	MEASUREMENT	SAMPLE	APP.DRG	APP.DRG	Q.A.REPORT		P	V	V	
4	ELECTRICAL & MECH.	A) CHECK ARRANGE / LAYOUT OF COMP. & MOUNTING	CRITICAL	VISUAL	100%	APP.DRG	APP.DRG	Q.A.REPORT		P	V	V	
		B) WIRE CLAMPING & FERULING	CRITICAL	VISUAL	100%	APP.DRG	APP.DRG	Q.A.REPORT		P	V	V	
		C) INTERCONNECTION B/W COMPONENT	CRITICAL	VISUAL	100%	APP.DRG	APP.DRG	Q.A.REPORT		P	V	V	
		D)LUG SIZE&CRIMPING	CRITICAL	VISUAL	100%	APPD. APP.DRG	F.S./APP.DRG	Q.A.REPORT		P	V	V	
		E) COMPONENT IDENTIFICATION	CRITICAL	VISUAL	100%	APPD. APP.DRG	APP.DRG	Q.A.REPORT		P	V	V	
		F) WIRE SIZE	MAJOR	VISUAL	SAMPLE	IS-694 / APP.DRG	IS-694 / APP.DRG	M.T.C./QA REP.		P	V	V	
		G) NAME PLATES	CRITICAL	VISUAL	100%	APP.DRG	APP.DRG	Q.A.REPORT		P	V	V	
		H) PIPING	MAJOR	VISUAL	100%	APP.DRG	APP.DRG	Q.A.REPORT		P	V	V	

		LEGEND :	FOR END USER :	DOC. NO.
		* RECORDS, INDENTIFIED WITH `TICK' SHALL BE ESSENTIALLY INCLUDED BY CONTRACTOR IN QA DOCUMENTATION.		
		** M : MANUFACTURER/ SUBCONTRACTOR		
MANUFACTURER /SUBCONTRACTOR	CONTRACTOR	C: CONTRACTOR/ NOMINATED INSPECTION AGENCY E : END USER INDICATE `P' PERFORM, `W' WITNESS AND `V' VERIFICATION		
SIGNATURE		AS APPROPRIATE "CHP" END USER SHALL IDENTIFIED IN COLUMN `E'	REVIEWED BY	NAME & SIGN OFAPPROVING AUTHORITY WITH SEAL

MANUFACTURER'S NAME & ADDRESS	MANUFACTURING QUALITY PLAN	
	ITEM : LOCAL INSTRUMENT ENCLOSURE & LOCAL INSTRUMENT RACK	QP Ref NO.: CE/416/LIE-LIR/QP REV. : 00 DT. : 09.07.2024 PAGE : 06 OF 06

S. NO.	COMPONENTS & OPERATIONS	CHARACTERISTICS	CLASS	TYPE OF CHECK	QUANTUM OF CHECK	REFERENCE DOCUMENT	ACCEPTANCE NORMS	FORMAT OF RECORD		AGENCY M	C	E	REMARKS
1	2	3	4	5	6	7	8	9	D*	**10			11
D)	***FINAL INSPECTION***												
1	A) VERIFICATION OF COMPONENTS /RATING/ ARRANGEMENTS/ LOCATION FOR EASY ACCESSABILITY AND MAINTENANCE .		CRITICAL	VISUAL	100%/SAM.	APP.DRG	APP.DRG	Q.A. REPORT		P	W	W	
	B) COMPLETENESS OF WIRING ,TUBING/ PIPING		CRITICAL	VISUAL	100%/SAM.	APP.DRG	APP.DRG	Q.A. REPORT		P	W	W	
	C) TERMINAL ARRANGEMENTS,SPARE TER- -MINALS , EARTH BUS TIN PLATED COPPER)		CRITICAL	VISUAL	100%/SAM.	APP.DRG	APP.DRG	Q.A. REPORT		P	W	W	
	D) PAINT SHADE,THICKNESS & ADHESION		CRITICAL	MEASUREMENT	SAMPLE	APP.DRG	APP.DRG	Q.A. REPORT		P	W	W	
	E) DOOR ALIGNMENT		MAJOR	VISUAL	100%/SAM.	APP.DRG	APP.DRG	Q.A. REPORT		P	W	W	
	F) GENERAL APPEARENCE (STRAIGHTNESS, FREE FROM SCRATCHES, BENDS, DENTS AND SHEET THICKNESS)		MAJOR	VISUAL	100%/SAM.	APP.DRG	APP.DRG	Q.A. REPORT		P	W	W	
	G) HYDROSTATIC TEST FOR ASSEMBLY. (1.5 TIMES RATED PRESSURE)		CRITICAL	MECHANICAL	100%	APP.DRG	APP.DRG/ NO LEAK/ PRESSURE DROP	Q.A. REPORT		P	W	W	PERFORMED BY VENDOR 100 % BHEL WITNESS ON 10%
	(PNEUMATIC TEST FOR PURGING LINES (NO LEAKAGED WITH SOAP SOLUTION)												
2	OVERALL FINISH		MAJOR	VISUAL	100%/SAM.	APP.DRG	APP.DRG	Q.A. REPORT		P	W	W	
3	CONTINUITY TEST		MAJOR	FUNCTIONAL	100%/SAM.	APP.DRG	APP.DRG	Q.A. REPORT		P	W	W	
4	IR TEST		MAJOR	MEASUREMENT	100%/SAM.	APP.DRG	APP.DRG	Q.A. REPORT		P	W	W	
5	HV TEST		MAJOR	MEASUREMENT	100%/SAM.	APP.DRG	APP.DRG	Q.A. REPORT		P	W	W	
6	FUNCTIONAL TEST		MAJOR	FUNCTIONAL	100%/SAM.	APP.DRG	APP.DRG	Q.A. REPORT		P	W	W	
7	IP TEST	TYPE TEST	MAJOR	VERIFICATION	100%/SAM.	APP.DRG	APP.DRG	Q.A. REPORT		P	V	V	

M. T.C. = MANUFACTURER'S / MATERIAL TEST CERTIFICATE
F.S. = FACTORY STANDARD
NOTE :- CUSTOMER / INSPECTION AGENCY / END USER MAY DO INSPECTION ON SAMPLE BASIS

Q.A.REP.= QUALITY ASSURANCE REPORT
APP. APP.DRG = APPROVED DRAWING
SAM. = SAMPLE

LEGEND :
* RECORDS, INDENTIFIED WITH `TICK' SHALL BE ESSENTIALLY INCLUDED BY CONTRACTOR IN QA DOCUMENTATION.
** M : MANUFACTURER/ SUBCONTRACTOR
C: CONTRACTOR/ NOMINATED INSPECTION AGENCY E : END USER
INDICATE `P' PERFORM, `W' WITNESS AND `V' VERIFICATION
AS APPROPRIATE "CHP" END USER SHALL IDENTIFIED IN COLUMN `E'

MANUFACTURER /SUBCONTRACTOR	CONTRACTOR	REVIEWED BY	NAME & SIGN OFAPPROVING AUTHORITY WITH SEAL
SIGNATURE			