INDEX SHEET

RFQ No.: **NJP0000014**

PROJECT **: WBPDCL SAGARDIGHI 1X660 MW UNIT#5 STPP**

ITEM DESCRIPTION : **LIE/LIR**

SL NO.	DESCRIPTION	PAGE Nos.
01	SPECIAL COMMERCIAL CONDITIONS OF CONTRACT	02 TO 05
02	GENERAL COMMERCIAL CONDITIONS FOR CONTRACT	06 TO 14
03	INSTRUCTIONS TO BIDDERS	15 TO 46
04	PURCHASE SPECIFICATION	47 TO 119

ಭಾರತ್ ಹೆವಿ ಎಲೆಕ್ಟ್ರಿಕಲ್ಸ್ ಲಿಮಿಟೆಡ್
भारत हेवी इलेक्ट्रिकल्स लिमिटेड
Bharat Heavy Electricals Ltd.,
(A Government of India undertaking)
Electronics Division
PB 2606 , Mysore Road Bangalore , 560026 INDIA

CE: PR: 003- Rev 02

SPECIAL COMMERCIAL CONDITIONS OF CONTRACT

Reference is brought to BHEL's Instructions to Bidders (Document Ref: CE: PR: 001- Rev 04) and General Commercial Conditions for Contract (Document Ref: CE: PR: 002- Rev 03).

These two documents along with Special Conditions of Contract annexed to this RFQ will form an integral part of the contract as and when the RFQ culminates into a Purchase Order / Contract.

RFQ No. : **NJP0000014**
RFQ Date : As per E-procurement website
RFQ Due Date : As per E-procurement website
Customer/Project : **WBPDCL SAGARDIGHI 1X660 MW UNIT#5 STPP**
Scope Description : **LIE/LIR**

Kindly submit your quotation as **two part bid** (Pre-Qualification Criteria & Techno-Commercial bid-1st part & Price bid-2nd Part) in E-Procurement System portal: https://eprocurebhel.co.in within the Due- Date of __ As per E-procurement website _____ before _ As per E-procurement website _____ hours IST and note that tenders will be opened on the same day at _ As per E-procurement website _____hours IST.

Purchase Executives: Clarifications with regard to the tender shall be addressed to purchase officers whose e-mail IDs are given below:
_____nandjee@bhel.in_____ or _____rk.pandey@bhel.in_____

Splitting of tendered quantity to MSE vendors for Purchase preference: Non-Splitable

Destination: For Indigenous scope of supply, items are to be directly despatched to BHEL site office/stores located at __ **Murshidabad District** in _ **West Bengal**___ state respectively, India. Detailed Consignee details will be issued by BHEL along with Despatch Clearance.

Terms of Delivery:

- **Indigenous scope of supply:** Ex-works, ___<indicate station of dispatch>_____ (including Packing & Forwarding charges but excluding Taxes).

Under-mentioned details shall be provided against indigenous supplies & services:

a. GSTIN of place of supply : _____

b. HSN (Harmonized System of Nomenclature) code : _____
Applicable tax and Rate : _____&_____

c. GSTIN of place of supply of service : _____

d. SAC (Service Accounting Code) :_____
Applicable tax and Rate : _____&_____

e. GeM Seller ID mandatorily required for PO placement: _____

f. MSE vendor : Yes-MSE supporting documents enclosed/No
(If MSE, supporting documents such as Udyam certificate to be enclosed)

I. Bidders to mandatorily provide confirmation/compliance for the under-mentioned terms:

SL NO.	TERMS	BHEL ACCEPTABLE TERM	BIDDER'S CONFIRMATION	REMARKS,if any
01	~~**Reverse Auction (RA)**~~	~~BHEL shall be resorting to Reverse Auction (Guidelines as available on http://www.bhel.com/index.php/vender) for this tender. RA shall be conducted among all the techno-commercially qualified bidders.~~ ~~Price bids of all techno-commercially qualified bidders shall be opened and same shall be considered as initial bids of bidders in RA. In case any bidder(s) do(es) not participate in online Reverse Auction, their sealed envelope price bid along with applicable loading, if any, shall be considered for ranking.~~	~~AGREE~~	
03	**Delivery Period**	Within _10_ weeks from the date of issue of Manufacturing clearance along with approved document. Delay in contractual delivery will attract Penalty as per GCC Clause no.:04.b. Manufacturing clearance will be provided as per latest site delivery schedule. Present tentative delivery schedule is indicated as below: Delivery schedule for Main Supply: January 2024 Delivery schedule for Mandatory Spares : June 2024	AGREE …….. weeks	
04	**Terms of Payment at the time of material supply**	Refer Clause "F" of Instructions to Bidder for BHEL standard Payment terms and loading factors applicable for non-compliance against payment terms: **Indigenous Scope :** **b)Supply only** ~~**Imported Scope :**~~ ~~c)Supply with Service(s)~~ ~~**High Sea sales :**~~ ~~e)Supply with Service(s)~~ ~~**Spares :**~~ ~~b) and/or d)/f) depending upon the scope~~	AGREE	
05	**Declaration of local content :** The 'Class-I local supplier' shall be required to	'Local content' means the amount of value added in India which shall, unless otherwise prescribed by the Nodal Ministry, be the total value of the item procured (excluding net domestic indirect taxes) minus the value of imported content in the item	Percentage of local content : _____%	

	indicate percentage of local content and provide certification that the item offered meets the local content requirement for 'Class-I local supplier'.	(including all customs duties) as a proportion of the total value, in percent. {'Class-I local supplier' means a supplier or service provider, whose goods, services or works offered for procurement, has local content equal to or more than 50%, as defined under Public procurement order no.P-45021/2/2017-PP (BE-II) dt: 16.09.2020. In the event of any Nodal Ministry prescribing higher or lower margin of purchase preference and/or higher or lower percentage of local content in respect of this procurement, same shall be applicable}.' (Refer Clause 'A' Sl. No. 12 of Instructions to Bidders). Note: Non Local suppliers are also eligible to participate in the tender	Details of the Location(s) at which the local value addition is made : _____	
06	Declaration as a Compliance of Restrictions under Rule 144 (xi) of GFR 2017 as per DOE Order (Public Procurement No.4) dated 23.02.2023 (as amended from time to time)	The below declaration is to be submitted on Company Letter head duly signed and sealed by authorised signatory, for ascertaining the eligibility of offer in the tender. "I have read the clause regarding restrictions on procurement from a bidder of a country which shares a land border with India; I certify that our firm is not from such a country or, if from such a country, has been registered with the Competent Authority. I hereby certify that our firm fulfils all requirements in this regard and is eligible to be considered." (Refer Clause 'A' Sl. No. 13 of Instructions to Bidders).		

II. **<u>Bidder to note that Deviations shall not be permitted for the below mentioned terms and are deemed to be complied. In case of non-compliance/deviation, offer shall be liable for rejection:</u>**

(1) **Submission of documents post PO viz., drawings /data sheet etc. as indicated in Cl: 04 of GCC:** Within _02_ weeks from the date of receipt of Purchase Order. Delay in submission of complete set of specified documents in NIT, will attract Penalty as per GCC Clause no.:04.a.

(2) **Validity:** The offer will be valid for a period of _90_ days from the date of part-I bid opening and in case of Negotiation/ Counter-offer/RA, price validity will apply afresh for a period of _60_ days from the date of according final price by bidder (or) up to original validity period, whichever is later.

(3) **Warranty:** _24_ months from the date of dispatch of goods.

(4) **Despatch Documents:** Complete set of despatch documents (original + 1 photocopy set) as per Purchase Order shall be forwarded to Purchase Executive/BHEL directly. Depending upon the project/customer demands, Despatch documents may include one (or) more documents from the following:

Invoice (01 original and 01 copy with original sign & seal / digitally signed invoice), Lorry Receipt (L/R), Packing List, NIL Short-Shipment Certificate, Warranty certificate, insurance intimation letter, E-way bill, and original POD (Proof of Delivery) on L/R.

The precise list of despatch documents needed for the project will be specified in the Purchase Order.

One set of Invoice, Packing List, Lorry Receipt (or) AWB/BOL shall be e-mailed immediately to BHEL-EDN at the time of despatch.

Note: Detailed Packing List should indicate package-wise content details and also Net & Gross weight of each package.

(5) **Freight Charges (for indigenous scope of supply):** Freight charges shall be to vendor's account. Bidder to quote reasonable Freight charges along with applicable tax, in price bid.

(6) **Evaluation criteria to determine L1 bidder**:

(b) Items will not be split on item-wise lowest offer. Evaluation of the lowest bidder will be done as a combined package basis.

(7) Integrity Pact:

Execution of Integrity Pact is applicable for this tender (Refer clause "K" of Instructions to Bidders). The IP as enclosed with the tender is to be submitted (duly signed by authorized signatory who signs in the offer) along with techno-commercial bid . Only those Bidders who have entered into such an IP with BHEL would be competent to participate in the bidding. In other words, entering into this Pact would be a preliminary qualification.

With this, we hereby confirm that all the terms & conditions as indicated in Instructions to Bidders (Document Ref: CE: PR: 001- Rev 04) & General Commercial Conditions for Contract (Document Ref: CE: PR: 002- Rev 03) are accepted without any deviation.

Vendor's Signature with Seal

ಭಾರತ್ ಹೆವಿ ಎಲೆಕ್ಟ್ರಿಕಲ್ಸ್ ಲಿಮಿಟೆಡ್
भारत हेवी इलेक्ट्रिकल्स लिमिटेड
Bharat Heavy Electricals Ltd.,
(A Government of India undertaking)
Electronics Division
PB 2606 , Mysore Road Bangalore , 560026 INDIA

CE: PR: 002- Rev 03

GENERAL COMMERCIAL CONDITIONS FOR CONTRACT

These 'General Commercial Conditions for Contract for Purchase' herein after referred to as GCC apply to all enquiries, tenders, requests for quotations, orders, contracts and agreements concerning the supply of goods and the rendering of related services (hereinafter referred to as "deliveries") to Bharat Heavy Electricals Limited and any of its units, regions or divisions (hereinafter referred to as "BHEL" or the Purchaser) or its projects/ customers.

Any deviations from or additions to these GCC require BHEL's express written consent. The general terms of business or sale of the vendor shall not apply to BHEL. Acceptance, receipt of shipments or services or effecting payment shall not mean that the general terms of business or sale of the vendor have been accepted.

Orders, agreements and amendments thereto shall be binding if made or confirmed by BHEL in writing. Only the Purchasing department of BHEL is authorized to issue the Purchase Order or any amendment thereof.

Definitions: Throughout these conditions and in the specifications, the following terms shall have the meanings assigned to them, unless the subject matter or the context requires otherwise.

a) 'The Purchaser' means Bharat Heavy Electricals Limited, Electronics division, Mysore road, Bangalore 560 026, a Unit of Bharat Heavy Electricals Limited (A Govt. of India Undertaking) incorporated under the Companies Act having its registered office at BHEL House, Siri Fort, New Delhi-110049, India and shall be deemed to include its successors and assigns. It may also be referred to as BHEL.
b) 'The vendor' means the person, firm, company or organization on whom the Purchase Order is placed and shall be deemed to include the vendor's successors, representative heirs, executors and administrator as the case may be. It may also be referred to as Seller, Contractor or Supplier.
c) 'Contract' shall mean and include the Purchase Order incorporating various agreements, viz. tender/ RFQ, offer, letter of intent/acceptance/ award, the General Conditions of Contract and Special Conditions of Contract for Purchase, Specifications, Inspection/ Quality Plan, Schedule of Prices and Quantities, Drawings, if any enclosed or to be provided by BHEL or his authorized nominee and the samples or patterns if any to be provided under the provisions of the contract.
d) 'Parties to the Contract' shall mean the 'The Vendor' and the Purchaser as named in the main body of the Purchase Order.

Order of Precedence:

In case of any inconsistency or contradiction between any of the documents, the order of precedence shall be Purchase Order, LOI / LOA, Special Conditions of Contract and General Conditions of Contract for commercial conditions; and specific agreement on technical conditions, RFQ/offer and specification for Technical Conditions.

Interpretation:

In the contract, except where the context requires otherwise:

a) words indicating one gender include all genders;
b) words indicating the singular also include the plural and words indicating the plural also include the singular;

c) provisions including the word "agree", "agreed" or "agreement" require the agreement to be recorded in writing, and
d) "Written" or "in writing" means hand-written, type-written, printed or electronically made, and resulting in a permanent record.

Applicable Conditions:

1. Price Basis: All prices shall be firm until the purchase order is executed / completed in all respects. No price variations / escalation shall be permitted.

2. Ordering and confirmation of Order:Vendor shall send the order acceptance on their company letter head/ through e-mail within a week from the date of receipt of Purchase Order or such other period as specified/ agreed by BHEL. BHEL reserves the right to revoke the order placed if the order confirmation differs from the original order placed. The acceptance of goods/services/supplies by BHEL as well as payments made in this regard shall not imply acceptance of any deviations.
   The purchase order will be deemed to have been accepted if no communication to the contrary is received within one week (or the time limit as specified/agreed by BHEL) from the date of receipt of the purchase order.

3. Documentation:After receipt of Purchase Order, vendor should submit necessary documents(if & as applicable) like drawings specified, bill of materials, datasheets, catalogues, quality plan, test procedure, type test report , O & M Manuals and/or any other relevant documents as per Specification/Purchase Order, as and when required by BHEL/Customer.
   At any stage within the contract period, the vendor shall notify of any error, fault or other defect found in BHEL's documents /specifications or any other items for reference. If and to the extent that (taking account of cost and time) any vendor exercising due care would have discovered the error, fault or other defect when examining the documents/specifications before submitting the tender, the time for completion shall not be extended. However if errors, omissions, ambiguities, inconsistencies, inadequacies or other defects are found in the vendor's documents, they shall be corrected at his cost, notwithstanding any consent or approval.

4. Penalty:
   a. For delay in documentation: In the event of delay in submission of complete set of specified documents ((like drawings, bill of materials, datasheets, catalogues, quality plan etc. as called in tender specifications including soft copies wherever applicable) in required sets beyond two(02) weeks (or as agreed/indicated in the SCC/Purchase Order) from the date of receipt of Purchase Order(by email), penalty at 0.5% (half percent) per week or part thereof, limited to a maximum of 5% (five percent) of the basic material value of the Purchase Order will be applicable.

      Penalty for delayed documentation if applicable, shall be deducted at the time of first supply payment. If penalty is applicable for duration of less than a week, penalty @ 0.5% (half percent) of the basic material value will be deducted. GST as applicable will be recovered along with penalty amount.

   b. For delay in delivery: In the event of delay in agreed contractual delivery as per Purchase Order, penalty @ 0.5 % (half percent) per week or part thereof but limited to a max of 10% (ten percent) value of undelivered portion (basic material cost) will be applicable. Delivery will commence from the date of issue of Manufacturing clearance along with approved document. The date for which Inspection call is issued by vendor along with test certificates / test reports /Certificate of Conformance / calibration reports, as proof of completion of manufacturing will be treated as date of deemed delivery for penalty calculation. In the absence of furnishing such document indicated above as proof of completion of manufacturing along with inspection call, actual date of inspection will be considered as date of deemed delivery and BHEL will not be responsible for delay in actual date of inspection.

Penalty for delayed delivery if applicable, shall be deducted at the time of first supply payment. If penalty is applicable for duration of less than a week, penalty @ 0.5% (half percent) of the basic material value will be deducted. GST as applicable will be recovered along with penalty amount.

5. Contract variations (Increase or decrease in the scope of supply): BHEL may vary the contracted scope as per requirements at site. If vendor is of the opinion that the variation has an effect on the agreed price or delivery period, BHEL shall be informed of this immediately in writing along with technical details. Where unit rates are available in the Contract, the same shall be the basis for such additional work. Vendor shall not perform additional work before BHEL has issued written instructions/ amendment to the Purchase Order to that effect. The work which the vendor should have or could have anticipated in terms of delivering the service(s) and functionality (i.e.) as described in this agreement, or which is considered to be the result of an attributable error on the vendor's part, shall not be considered additional work.

6. Inspection: Prior written notice of at least 10 days shall be given along with internal test certificates/COC and applicable test certificates. Materials will be inspected by BHEL-EDN-QS/CQS or BHEL nominated Third Party Inspection Agency (TPIA) or BHEL authorized Inspection Agency or Customer / Consultant or jointly by BHEL & Customer / consultant. All tests have to be conducted as applicable in line with approved Quality plan or QA Checklist or Purchase specification and original reports shall be furnished to BHEL-EDN, Bangalore for verification/acceptance for issue of dispatch clearance. BHEL reserves the right for conducting repeat test, if required.
   All costs related to inspections & re-inspections shall be borne by vendor. Whether the Contract provides for tests on the premises of the vendor or any of his Sub-contractor/s, vendor shall be responsible to provide such assistance, labour, materials, electricity, fuels, stores, apparatus, instruments as may be required and as may be reasonably demanded to carry out such tests efficiently. Cost of any type test or such other special tests shall be borne by BHEL only if specifically agreed to in the purchase order.

7. Transit Insurance: Transit insurance coverage between vendor's works and project site shall be to the account of BHEL, unless specifically agreed otherwise. However, vendor shall send intimation directly to insurance agency (as mentioned in dispatch instructions issued by BHEL) through fax/courier/e-mail, immediately on dispatch of goods for covering insurance. A copy of such intimation sent by vendor to insurance agency shall be given to BHEL along with dispatch documents. Dispatch documents will be treated as incomplete without such intimation copy. BHEL shall not be responsible for sending intimations to insurance agency on behalf of the vendor.

8. Mode of dispatch:
   Indigenous Scope: By road on Door Delivery Consignee Copy attached basis through your approved transporter (unless otherwise indicated in Dispatch Instructions), only on receipt of Despatch Clearance from BHEL.
   Imported Scope: By Air/Sea through BHEL approved Freight Forwarder/supplier approved Consolidator respectively as per agreed contractual terms, only on receipt of Dispatch Clearance from BHEL.

9. Changes in Statutory levies:
   If any rates of Tax are increased or decreased, a new Tax is introduced, an existing Tax is abolished, or any change in interpretation or application of any Tax occurs in the course of the execution of Contract, which was or will be assessed on the bidder in connection with performance of the Contract, an equitable adjustment of the Contract Price shall be made to fully take into account any such change by addition to the Contract Price or deduction there from, as the case may be. However, these adjustments would be restricted to direct transactions between BHEL and the bidder /agent of foreign bidder (if applicable). These adjustments shall not be applicable on procurement of raw materials, intermediary components etc. by the bidder /agent.

10. Availing duty/tax exemption benefits by bidder, wherever applicable: BHEL shall issue the required Certificate/s, as per relevant policies of the Govt. of India, to facilitate the bidders to avail any such benefits under the Contract. In case of failure of the bidders to receive the benefits partly or fully from the Govt. of India and/or in case of any delay in receipt of such benefits, BHEL shall neither be liable nor responsible in any manner whatsoever.

11. Taxes against sub-vendor dispatches: All taxes/levies, as applicable in respect of all components, equipments and material to be despatched directly from the sub-vendor's works to Site irrespective of the fact whether such taxes and levies are assessable and chargeable on Vendor or the BHEL, shall be to the vendor's account and no separate claim in this regard will be entertained by BHEL.

12. High Sea Sales (HSS): Customs clearance of the consignment landed on Indian Sea/Air ports will be done by BHEL based on the original HSS documents provided by vendors.
    Any delay in submission of complete/correct HSS documents to BHEL may incur demurrage charges. All demurrage charges on account of incomplete /incorrect HSS documents submission by vendor will be to vendor's account and all such charges will be recovered from any of the available vendor bills with BHEL.

13. Packaging and dispatch:The Seller shall package the goods safely and carefully and pack them suitably in all respects considering the peculiarity of the material for normal safe transport by Sea/ Air / Rail/ Road to its destination suitably protected against loss, damage, corrosion in transit and the effect of tropical salt laden atmosphere. The packages shall be provided with fixtures/ hooks and sling marks as may be required for easy and safe handling. If any consignment needs special handling instruction, the same shall be clearly marked with standard symbols / instructions. Hazardous material should be notified as such and their packing, transportation and other protection must conform to relevant regulations.
    The packing, shipping, storage and processing of the goods must comply with the prevailing legislation and regulations concerning safety, the environment and working conditions. *For facilitating smooth movement of shipment, the consignment has to be in stackable condition*. Any Imported/Physical Exports items packed with raw/ solid wood packing material should be treated as per ISPM – 15 (fumigation) and accompanied by Phytosanitory/ Fumigation certificate. If safety information sheets (MSDS – Material Safety Data Sheet) exist for an item or the packaging, vendor must provide this information without fail along with the consignment.
    Each package must be marked with Consignee name, Purchase order number, Package number, Gross weight and net weight, dimensions (LxBxH) and Seller's name. Packing list of goods inside each package with PO item number and quantity must also be fixed securely outside the box to indicate the contents of each box. Total number of packages in the consignment must also be indicated in the packing list.
    Separate packing & identification of items should be as follows.
    1. Main Scope - All items must be tagged with part no. & item description.
    2. Commissioning accessories/spares - All items must be tagged with part no. & item description.
    3. Mandatory spares - All items must be tagged with part no. & item description.
    Nevertheless, vendor shall adhere to dispatch & packing instructions issued by BHEL at the time of dispatch.

14. Assignment of Rights & Obligations; Subcontracting: Vendor is not permitted to subcontract the delivery or any part thereof to third party or to assign the rights and obligations resulting from this agreement in whole or in part to third parties without prior written permission from BHEL. Any permission or approval given by the BHEL shall, however, not absolve the vendor of the responsibility of his obligations under the Contract.

15. Progress report: Vendor shall render such report as to the progress of work and in such form as may be called for by the concerned purchase officer from time to time. The submission and acceptance of such reports shall not prejudice the rights of BHEL in any manner.

16. Non-disclosure and Information Obligations: Vendor shall provide with all necessary information pertaining to the goods as it could be of importance to BHEL. Vendor shall not reveal any specified confidential information that may be divulged by BHEL to Vendor's employees not involved with the tender/ contract & its execution and delivery or to third parties, unless BHEL has agreed to this in writing beforehand. Vendor shall not be entitled to use the BHEL name in advertisements and other commercial publications without prior written permission from BHEL.

17. Cancellation /Termination of contract: BHEL shall have the right to completely or partially terminate the agreement by means of written notice to that effect. Termination of the Contract, for whatever reason, shall be without prejudice to the rights of the parties accrued under the Contract up to the time of termination.

BHEL shall have the right to cancel/foreclose the Order/ Contract, wholly or in part, in case it is constrained to do so on account of any decline, diminution, curtailment or stoppage of the business.

18. Risk Purchase Clause: In case of failure of supplier, BHEL at its discretion may make purchase of the materials / services not supplied / rendered in time at the RISK & COST of the supplier. Under such situation, the supplier who fails to supply the goods in time shall be wholly liable to make good to BHEL any loss due to risk purchase.

    In case of items demanding services at site like erection and commissioning, vendor should send his servicemen/representatives within 7 days from the service call. In case a vendor fails to attend to the service call, BHEL at its discretion may also make arrangements to attend such service by other parties at the **RISK & COST** of the supplier. Under such situation the supplier who fails to attend the service shall be wholly liable to make good to BHEL any loss due to risk purchase/service including additional handling charges due to the change.

19. Shortages: In the event of shortage on receipt of goods and/or on opening of packages at site, all such shortages, caused by supplier's act or omission, shall be made good at free of cost within a reasonable time that BHEL may allow from such intimation.

    Transit Damages: In the event of receipt of goods in damaged condition or having found them so upon opening of packages at site, supplier shall make good of all such damages within a reasonable time from such intimation by BHEL. In case BHEL raises an insurance claim, the cost of material limited to insurance settled amount less handling charges will be reimbursed to supplier.

20. Remedial work: Notwithstanding any previous test or certification, BHEL may instruct the vendor to remove and replace materials/goods or remove and re-execute works/services which are not in accordance with the purchase order. Similarly BHEL may ask the vendor to supply materials or to execute any services which are urgently required for any safety reasons, whether arising out of or because of an accident, unforeseeable event or otherwise. In such an event, Vendor shall provide such services within a reasonable time as specified by BHEL.

21. Indemnity Clause: Vendor shall comply with all applicable safety regulations and take care for the safety of all persons involved. Vendor is fully responsible for the safety of its personnel or that of his subcontractor's men / property, during execution of the Purchase Order and related services. All statutory payments including PF, ESI or other related charges have to be borne by the vendor. Vendor is fully responsible for ensuring that all legal compliances are followed in course of such employment. Vendor shall fully indemnify and keep indemnified BHEL against all claims of whatsoever nature arising during the course and out of execution of this Order/Contract.

22. Product Information, Drawings and Documents: All specified drawings, technical documents or other technical information received by Vendor from BHEL or vice versa shall not, without the consent of the other party, be used for any other purpose than that for which they were provided. They may not, without the consent of the Disclosing party, otherwise be used or copied, reproduced, transmitted or communicated to third parties. All information and data contained in general product documentation, whether in electronic or any other form, are binding only to the extent that they are by reference expressly included in the contract.

    Vendor, as per agreed date/s but not later than the date of delivery, provide free of charge information and drawings which are necessary to permit and enable BHEL to erect, commission, operate and maintain the product. Such information and drawings shall be supplied in as many numbers of copies as may be agreed upon.

    All intellectual properties, including designs, drawings and product information etc. exchanged during the formation and execution of the Contract shall continue to be the property of the disclosing party.

23. Intellectual Property Rights, Licenses: If any Patent, design, Trade mark or any other intellectual property rights apply to the delivery (goods/related service) or accompanying documentation shall be the exclusive

property of the Vendor and BHEL shall be entitled to the legal use thereof free of charge by means of a non-exclusive, worldwide, perpetual license. All intellectual property rights that arise during the execution of the Purchase Order/ contract for delivery by vendor and/or by its employees or third parties involved by the vendor for performance of the agreement shall belong to BHEL. Vendor shall perform everything necessary to obtain or establish the above mentioned rights. The Vendor guarantees that the delivery does not infringe on any of the intellectual property rights of third parties. The Vendor shall do everything necessary to obtain or establish the alternate acceptable arrangement pending resolution of any (alleged) claims by third parties. The Vendor shall indemnify BHEL against any (alleged) claims by third parties in this regard and shall reimburse BHEL for any damages suffered as a result thereof.

24. Force Majeure: Notwithstanding anything contained in the purchase order or any other document relevant thereto, neither party shall be liable for any failure or delay in performance to the extent said failures or delays are caused by the "Act of God" and occurring without its fault or negligence, provided that, force majeure will apply only if the failure to perform could not be avoided by the exercise of due care and vendor doing everything reasonably possible to resume its performance.

    A party affected by an event of force majeure which may include fire, tempest, floods, earthquake, riot, war, damage by aircraft etc., shall give the other party written notice, with full details as soon as possible and in any event not later than seven (7) calendar days of the occurrence of the cause relied upon. If force majeure applies, dates by which performance obligations are scheduled to be met will be extended for a period of time equal to the time lost due to any delay so caused.

    Notwithstanding above provisions, in an event of Force Majeure, BHEL reserves for itself the right to cancel the order/ contract, wholly or partly, in order to meet the overall project schedule and make alternative arrangements for completion of deliveries and other schedules.

25. Warranty:
    Wherever required, and so provided in the specifications/ Purchaser Order, the Seller shall ensure that the goods supplied shall comply with the specifications laid down, for materials, workmanship and performance.

    Unless otherwise specified in SCC, warranty period shall be applicable for a period of 24 months from the date of delivery of goods or 18 months from the date of commissioning of goods, whichever is earlier.

    The warranty period as described above shall apply afresh to replaced, repaired or re-executed parts of a delivery. Unless otherwise specifically provided in the Purchase Order, Vendor's liability shall be co terminus with the expiration of the applicable warranty period.

26. Limitation of Liability: Vendor's liability towards this contract is limited to a maximum of 100% of the contract value and consequential damages are excluded. However the limits of liability will have no effect in cases of criminal negligence or wilful misconduct.

    The total liability of Vendor for all claims arising out of or relating to the performance or breach of the Contract or use of any Products or Services or any order shall not exceed the total Contract price.

27. Liability during warranty: Vendor shall arrange replacement / repair of all the defective materials / services under its obligation during the warranty period. The rejected goods shall be taken away by vendor and replaced / repaired. In the event of the vendor's failure to comply, BHEL may take appropriate action including disposal of rejections and replenishment by any other sources at the cost and risk of the vendor.

    In case, defects attributable to vendor are detected during Warranty period or where the commissioning call is issued within the warranty period, vendor shall be responsible for replacement/ repair of the goods as required by BHEL at vendor's cost even after expiry of warranty period.

    Further if the equipment or any part thereof cannot be used by reason of such defect and/or making good of such defect, the warranty period of the equipment or such part, as the case may be, shall be extended by a period equal to the period during which the equipment or such part cannot be used by BHEL because

of any of the aforesaid reasons. Upon correction of the defects in the facilities or any part thereof by repair/replacement, such repair/replacement shall have the warranty period for a period of twelve (12) months from the time such replacement/repair of the equipment or any part thereof has been completed.

28. Liability after warranty period: At the end of the warranty, the Vendor's liability ceases except for latent defects. For the purpose of this clause, latent defects shall be the defects inherently lying within the material or arising out of design deficiency which do not manifest themselves during the warranty Period, but later. The Contractor's liability for latent defects warranty for the equipment including spares shall be limited to a period of six months from the end of the warranty period of the respective equipment including spares or first time commissioning, whichever is later but not later than one (01) year from the date of expiry of warranty period.

29. Compliance with Laws: Vendor shall, in performing the contract, comply with all applicable laws. The vendor shall make all remittances, give all notices, pay all taxes, duties and fees, and obtain all permits, licences and approvals, as required by the laws in relation to the execution and completion of the contract and for remedying of any defects; and the Contractor shall indemnify and hold BHEL harmless against and from the consequences of any failure to do so.

30. Settlement of Disputes:Except as otherwise specifically provided in the Purchase Order, decision of BHEL shall be binding on the vendor with respect to all questions relating to the interpretation or meaning of the terms and conditions and instructions herein before mentioned and as to the completion of supplies/work/services, other questions, claim, right, matter or things whatsoever in any way arising out of or relating to the contract, instructions, orders or these conditions or otherwise concerning the supply or the execution or failure to execute the order, whether arising during the schedule of supply/work or after the completion or abandonment thereof. Any disputes or differences among the parties shall to the extent possible be settled amicably between the parties thereto, failing which the disputed issues shall be settled through arbitration. Vendor shall continue to perform the contract, pending settlement of dispute(s).

31. Arbitration Clause in case of Contract with vendors other than Public Sector Enterprise (PSE) or a Government Department:

    Arbitration & Conciliation:

    The parties shall attempt to settle any disputes or difference arising out of the formation, breach, termination, validity or execution of the Contract; or, the respective rights and liabilities of the parties; or, in relation to interpretation of any provision of the Contract; or, in any manner touching upon the Contract, or in connection with this contract through friendly discussions. In case no amicable settlement can be reached between the parties through such discussions, in respect of any dispute; then, either Party may, by a notice in writing to the other Party refer such dispute or difference to the sole arbitration of an arbitrator appointed by Head of the BHEL–EDN. Such Sole Arbitrator appointed, shall conduct the arbitration in English language.

    The Arbitrator shall pass a reasoned award and the award of the Arbitration shall be final and binding upon the Parties.

    Subject as aforesaid, the provisions of Arbitration and Conciliation Act 1996 (India) or statutory modifications or re-enactments thereof and the rules made thereunder and for the time being in force shall apply to the arbitration proceedings under this clause. The seat of arbitration shall be Bangalore.
    The cost of arbitration shall be borne as decided by the Arbitrator upon him entering the reference.
    Subject to the Arbitration Clause as above, the Courts at Bangalore alone shall have exclusive jurisdiction over any matter arising out of or in connection with this Contract.

    Notwithstanding the existence or any dispute or differences and/or reference for the arbitration, the parties shall proceed with and continue without hindrance the performance of its obligations under this Contract with due diligence and efficiency in a professional manner except where the Contract has been terminated by either Party in terms of this Contract.

Arbitration Clause in case of Contract with a Public Sector Enterprise (PSE) or a Government Department:

In the event of any dispute or difference relating to the interpretation and application of the provisions of the Contract, such dispute or difference shall be referred by either party for Arbitration to the Sole Arbitrator in the Department of Public Enterprises to be nominated by the Secretary to the Government of India in-charge of the Department of Public Enterprises. The Arbitration and Conciliation Act, 1996 shall not be applicable to arbitration under this clause. The award of the Arbitrator shall be binding upon the parties to the dispute, provided, however, any Party aggrieved by such Award may make further reference for setting aside or revision of the Award to the Law Secretary, Department of Legal Affairs, Ministry of Law and Justice, Government of India. Upon such reference the dispute shall be decided by the Law Secretary or the Special Secretary or Additional Secretary when so authorized by the Law Secretary, whose decision shall bind the Parties hereto finally and conclusively. The Parties to the dispute will share equally the cost of arbitration as intimated by the Arbitrator.'

32. Applicable Laws and Jurisdiction of Courts: Prevailing Indian laws both substantive and procedural, including modifications thereto, shall govern the Contract. Subject to the conditions as aforesaid, the competent courts in Bangalore alone shall have jurisdiction to consider over any matters touching upon this contract.

33. General Terms: That any non-exercise, forbearance or omission of any of the powers conferred on BHEL and /or any of its authorities will not in any manner constitute waiver of the conditions hereto contained in these presents.
That the headings used in this agreement are for convenience of reference only.
That all notices etc., to be given under the Purchase order shall be in writing, type script or printed and if sent by registered post or by courier service to the address given in this document shall be deemed to have been served on the date when in the ordinary course, they would have been delivered to the addressee.

34. *Conflict of Interest among Bidders/Agents*:

"A bidder shall not have conflict of interest with other bidders. Such conflict of interest can lead to anti-competitive practices to the detriment of Procuring Entity's interests. ***The bidder found to have a conflict of interest shall be disqualified.*** *A bidder may be considered to have a conflict of interest with one or more parties in this bidding process, if:*

a) *they have controlling partner (s) in common;* ***or***

b) *they receive or have received any direct or indirect subsidy/ financial stake from any of them;* ***or***

c) *they have the same legal representative/agent for purposes of this bid;* ***or***

d) *they have relationship with each other, directly or through common third parties, that puts them in a position to have access to information about or influence on the bid of another Bidder;* ***or***

e) *Bidder participates in more than one bid in this bidding process. Participation by a Bidder in more than one Bid will result in the disqualification of all bids in which the parties are involved. However, this does not limit the inclusion of the components/ sub-assembly/ Assemblies from one bidding manufacturer in more than one bid;* ***or***

f) In cases of agents quoting in offshore procurements, on behalf of their principal manufacturers, one agent cannot represent two manufacturers or quote on their behalf in a particular tender enquiry. One manufacturer can also authorise only one agent/dealer. There can be only one bid from the following:

1. *The principal manufacturer directly or through one Indian agent on his behalf; and*
2. *Indian/foreign agent on behalf of only one principal;*

or

g) A Bidder or any of its affiliates participated as a consultant in the preparation of the design or technical specifications of the contract that is the subject of the Bid; ***or***

h) In case of a holding company having more than one independently manufacturing units, or more than one unit having common business ownership/management, only one unit should quote. Similar restrictions would apply to closely related sister companies. Bidders must proactively declare such sister/ common business/ management units in same/ similar line of business."

ಭಾರತ್ ಹೆವಿ ಎಲೆಕ್ಟ್ರಿಕಲ್ಸ್ ಲಿಮಿಟೆಡ್
भारत हेवी इलेक्ट्रिकल्स लिमिटेड
Bharat Heavy Electricals Ltd.,
(A Government of India undertaking)
Electronics Division
PB 2606 , Mysore Road Bangalore , 560026 INDIA

CE:PR:001- Rev 04

INSTRUCTIONS TO BIDDERS

Bidder is requested to read the instructions carefully and submit their quotation taking into consideration of all the points:

A. GENERAL INSTRUCTIONS:

1. Any Purchase Order resulting from this enquiry shall be governed by the Instructions to Bidders (document reference: CE: PR: 001 – Rev 03), General Conditions of Contract (document reference: CE: PR: 002 - Rev 02) and Special Conditions of Contract, if any, of the enquiry.
2. Any deviations from or additions to the "General Conditions of Contract"or "Special Conditions of Contract" require BHEL's express written consent. The general terms of business or sale of the bidder shall not apply to this tender.
3. Regret letter (either through post or by mail or by EPS) indicating reasons for not quoting must be submitted without fail, in case of non-participation in this tender.

   Supplier shall be liable for removal as a registered vendor of BHEL when the supplier fails to quote against four consecutive tender enquiries for the same item or all enquiries in last two years for the same item, whichever is earlier.
4. Procurement directly from the manufacturers is preferred. However, if the OEM/ Principal insist on engaging the services of an agent, such agent shall not be allowed to represent more than one manufacturer/ supplier in the same tender.

   Moreover, either the agent could bid on behalf of the manufacturer/ supplier or the manufacturer/ supplier could bid directly but not both. Agent/Representative authorized by the OEM/Principal in turn cannot further sub authorize any other firm for submitting the offer or for placement of order.

   In case bids are received from the manufacturer/ supplier and his agent, bid received from the agent shall be ignored.
5. Consultant / firm (and any of its affiliates) shall not be eligible to participate in the tender/s for the related goods for the same project if they were engaged for consultancy services for the same project.
6. If an Indian representative/associate/liaison office quotes on behalf of a foreign based bidder, such representative shall furnish the following documents:
   a. Authorization letter to quote and negotiate on behalf of such foreign-based bidder.
   b. Undertaking from such foreign based bidder that such contract will be honored and executed according to agreed scope of supply and commercial terms and conditions.
   c. Undertaking shall be furnished by the Indian representative stating that the co-ordination and smooth execution of the contract and settlement of shortages/damages/replacement/repair of imported scope

till the equipment is commissioned and handed over to customer will be the sole responsibility of the Indian representative/associates/agent/liaison office.

d. Refer **Annexure I** on "Guidelines for Indian Agents".

7. In case of imported scope of supply, customs clearance & customs duty payment will be to BHEL account after the consignment is received at Indian Airport /Seaport. Bidders must provide all original documents required for completing the customs clearance along with the shipment.

   Warehousing charges due to incomplete or missing documentation will be to supplier's account. All offers for imported scope of supply by air, must be made from any of the gateway ports (within the country) indicated **(Refer Annexure II).**

8. The offers of the bidders who are on the banned list and also the offers of the bidders, who engage the services of the banned firms, shall be rejected. The list of the banned firms is available on BHEL website: http://www.bhel.com/vender_registration/vender.php

9. Business dealings with bidders will be suspended if they are found to have indulged in any malpractices/misconduct which are contrary to business ethics like bribery, corruption, fraud, pilferage, cartel formation, submission of fake/false/forged documents, certificates, information to BHEL or if they tamper with tendering procedure affecting the ordering process or fail to execute a contract, or rejection of 3 consecutive supplies or if their firms / works are under strike/lockout for a long period. Bidder may refer "Guidelines for Suspension of Business Dealings with Suppliers/ Contractors" available on www.bhel.com for more details.

   The Bidder declares that they will not enter into any illegal or undisclosed agreement or understanding, whether formal or informal with other Bidder(s). This applies in particular to prices, specifications, certifications, subsidiary contracts, submission or non-submission of bids or any other actions to restrict competitiveness or to introduce cartelization in the bidding process. In case, the Bidder is found having indulged in above activities, suitable action shall be taken by BHEL as per extant policies / guidelines.

10. The bidder along with its associate/collaborators/sub-contractors/sub-vendors/consultants/service providers shall strictly adhere to BHEL Fraud Prevention Policy displayed on BHEL website http://www.bhel.com and shall immediately bring to the notice of BHEL Management about any fraud or suspected fraud as soon as it comes to your notice.

11. Offer is to be submitted in English language only.

12. For this procurement, the local content to categorize a supplier as a Class-I local supplier/ Class-II local supplier/ Non-local supplier and purchase preference to Class-I local supplier, is as defined in Public procurement (Preference to Make in India), Order 2017 dated 16.09.2020 issued by DPIIT.

    In case of subsequent Orders issued by the Nodal Ministry, changing the definition of local content for the items of the NIT, the same shall be applicable even if issued after issue of this NIT, but before opening of price bids against this NIT. Default margin of purchase preference shall be 20% for Class-I local supplier only.

13. The Bidder shall mandatorily submit Declaration as mentioned under Rule 144(xi) of General Financial Rules, 2017 amendment dt 23.07.2020 issued by Ministry of Finance, Govt. of India. Where applicable, evidence of valid registration by the Competent Authority shall be attached.

    The Competent Authority for the purpose of registration under this Order shall be the Registration Committee constituted by the Department for Promotion of Industry and Internal Trade (DPIIT). Refer Annexure-X for 'Restrictions under Rule 144(Xi) of General Financial Rules,2017 amendment dt: 23.07.2020'.

B. <u>GUIDELINES FOR PREPARATION OF OFFER:</u>

1. Quotation shall be submitted in Single Part Bid, Two Part Bid or Three Part Bid, as called for in the tender:

   - **SINGLE PART BID**: Technical and Commercial Bid with prices along with price summary & filled in BHEL Standard Commercial terms and conditions in a single sealed envelope.

   - **TWO PART BID**: Unpriced offer i.e. "Techno-commercial Bid" with filled in BHEL Standard Commercial terms and conditions in a sealed envelope **along with the copy of the "Price Bid"without the prices** should be enclosed in one cover and the cover must be super scribed **"Techno-commercial offer)** and Priced offer i.e. "Price Bid"containing price summary in a separate sealed envelope and must be super scribed **"Price Bid"**.

     Both these envelopes shall be enclosed in a single sealed envelope superscribed with enquiry number, due date of tender and any other details as called for in the tender document.

   - **THREE PART BID**: Pre-qualification Bid (Part-I), Techno Commercial Bid with filled in BHEL Standard Commercial terms and conditions (Part-II), and Price Bid (Part-III). All three envelopes shall be enclosed in a single sealed envelope superscribed with enquiry number, due date of tender and any other details as called for in the tender document.

   If any of the offers (Part I, Part II or Part III) are not submitted before the due date and time of submission (or) if any part of the offer is incomplete, the entire offer of the bidder is liable for rejection.

2. Supplier shall ensure to superscribe each envelope with RFQ number, RFQ Date, RFQ Due date and time, Item Description and Project clearly & boldly. Also mention on the envelope whether it is "Techno Commercial Bid" or "Price Bid" or "Pre-Qualification Bid".

   Please ensure complete address, department name and purchase executive name is mentioned on the envelope (before dropping in the tender box or handing over) so that the tender is available in time for bid opening.

3. BHEL standard Commercial Terms and Conditions (duly filled, signed & stamped) must accompany Technical-Commercial offer without fail and should be submitted in original only.

   The above indicated submission of Offers in "sealed envelope/hard copy" as mentioned in points B.1-B.3 is applicable for tenders that are not floated through E-Procurement System (EPS).

4. Validity: Unless otherwise specified in SCC (special commercial conditions of contract), the offer will be valid for a period of 90 days from the date of part-I bid opening and in case of Negotiation/Counter-offer/Reverse Auction, price validity will apply afresh for a period of 60 days from the date of according final price by bidder (or) up to original validity period, whichever is later.

5. Any of the terms and conditions not acceptable to supplier, shall be explicitly mentioned in the Techno-Commercial Bid.

   If no deviations are brought out in the offer it will be treated as if all terms and conditions of this enquiry are accepted by the supplier without deviation.

6. Deviation to this specification/item description, if any, shall be brought out clearly indicating "DEVIATION TO BHEL SPECIFICATION" without fail, as a part of Techno-Commercial Bid.

   If no deviations are brought out in the offer it will be treated as if the entire specification of this enquiry is accepted without deviation.

7. Suppliers shall submit one set of original catalogue, datasheets, bill of materials, dimensional drawings, mounting details and/or any other relevant documents called in purchase specification as part of Technical Bid.
8. "Price Bid" shall be complete in all respects containing price break-up of all components along with all applicable taxes and duties, freight charges (if applicable) etc. Once submitted no modification / addition / deletion will be allowed in the "Price Bid." Bidders are advised to thoroughly check the unit price, total price to avoid any discrepancy.
9. In addition, bidder shall also quote for erection & commissioning charges/erection supervision & commissioning charges (E&C service charges), documentation charges, testing Charges (type & routine), training charges etc. if & as applicable along with corresponding tax. The price summary must indicate all the elements clearly.
10. Wherever applicable, bidders should indicate "lumpsum" Erection and Commissioning (or) Erection Supervision and Commissioning charges, as applicable (including To & Fro Fare, Boarding, Lodging, Local Conveyance etc.) for carrying out E&C activity and further handing over to customer.

    The quotation shall clearly indicate scope of work, likely duration of commissioning, pre-commissioning checklist (if any).
11. Wherever bidders require PAC (Project Authority Certificate)/applicable certificates for import of raw materials, components required for DECC,EPCG Power Projects, Export Projects or other similar projects wherein supplies are eligible for customs duty benefits, lists and quantities of such items and their values (CIF) has to be mentioned in the offer. Prices must be quoted taking into account of such benefits.
12. Prices should be indicated in both figures & words**.** Bid should be free from correction/overwriting, using corrective fluid, etc. Any interlineation, cutting, erasure or overwriting shall be valid only if they are attested under full signature(s) of person(s) signing the bid else bid shall be liable for rejection.

    Any typographical error, totalling mistakes, currency mistake, multiplication mistake, summing mistakes etc. observed in the price bids will be evaluated as per **Annexure III** "Guidelines for dealing with Discrepancy in Words & Figures – quoted in price bid" and BHEL decision will be final.
13. Documents submitted with the offer shall be signed and stamped in each page by authorized representative of the bidder. However, this requirement is not mandatory for offers uploaded through E-Procurement System (EPS).

C. <u>GUIDELINES FOR OFFER SUBMISSION:</u>

The under-mentioned clauses 1, 2&3 will not be applicable for EPS tenders.

1. Offers / Quotations must be dropped in tender box before 13.00 Hrs. on or before due date mentioned in RFQ.The offers are to be dropped in the proper slot of the Tender Box kept in our reception area with caption "CE, SC&PV, DEFENCE".

   Tenders are opened on 3 days in a week (Monday/Wednesday/Friday). Tender must be deposited in the slot corresponding to the day (Monday - Box no.4/Wednesday - Box no. 6 /Friday - Box no.8) while depositing the offer.

2. E-Mail/ Internet/EDI offers received in time shall be considered only when such offers are complete in all respects. In case of offers received through E-mail, please send the offer to the email ID specified in the SCC document of the tender.

3. Offers of Vendors who already have a valid Technical/Commercial MOU with BHEL-EDN for the items of the RFQ shall mention the relevant MOU reference no. and give only such other details not covered in the MOU.

4. In cases where tender documents are bulky, or due to some reasons tender documents are required to be submitted by hand or through posts/couriers, the offers are to be handed over either of the two purchase officers whose names are mentioned in the SCC document of tender RFQ.
5. Tenders will be opened on due date, time and venue as indicated in the RFQ in the presence of bidders at the venue indicated in the RFQ. For EPS tenders, e-mail notifications will be automatically generated and forwarded to registered e-mail ID/s of bidders during opening of tenders.
6. Bidder will be solely responsible:
   a. For submission of offers before due date and time. Offers submitted after due date and time will be treated as "Late offers" and will be rejected.

   b. For submission of offers in the correct compartment of the tender box based on the day of due date (Monday/Wednesday/Friday). Please check before dropping your offer in the correct tender box.

   c. For depositing offers in proper sealed condition in the tender box. If the bidder drops the tender in the wrong tender box (or) if the tender document is handed over to the wrong person, BHEL will not be responsible for any such delays.

   d. For offers received through email etc., suppliers are fully responsible for lack of secrecy on information and ensuring timely receipt of such offers in the tender box before due date & time (This clause will not be applicable for EPS tenders).

   The above indicated submission of Offers as mentioned in points 6.a-6.d is applicable for tenders that are not floated through EPS.

   e. In case of e-tender, all required documents should be uploaded before due date and time. Availability of power, internet connections, system/software requirements etc. will be the sole responsibility of the bidder.

      Wherever assistance is needed for submission of e-tenders, help-line numbers as available in the web-site of service provider of BHEL may be contacted.

      Purchase Executive/ BHEL shall not be responsible for any of the activities relating to submission of offer.

D. <u>PROCESSING OF OFFERS RECEIVED:</u>

1. Any discount/ revised offer submitted by the supplier on its own shall be accepted provided it is received on or before the due date and time of offer submission (i.e. Part-I bid).

   The discount shall be applied on pro-rata basis to all items unless specified otherwise by the bidder.
2. Changes in offers or Revised offers given after Part-I bid opening shall not be considered as a part of the original offer unless such changes/revisions are requested by BHEL.

   In case of withdrawal of any Technical/Commercial deviation(s) by the bidder before opening of price bids/conducting the Reverse Auction, revision of price/impact bid will not be accepted.
3. In case there is no change in the technical scope and/ or specifications and/ or commercial terms & conditions, the supplier will not be allowed to change any of their bids after Technical bids are opened (after the due date and time of tender opening).

4. In case of changes in scope and/ or technical specifications and/ or commercial terms & conditions by BHEL and it accounts for price implications from bidders, all techno-commercially acceptable bidders shall be asked by BHEL (after freezing the scope, technical specifications and commercial terms & conditions) to submit the impact of such changes on their price bid.

   Impact price will be applicable only for changes in technical specification / commercial conditions by BHEL. The impact price must be submitted on or before the cut-off date specified by BHEL and the original price bid and the price impact bid will be opened together at the time of price bid opening.

5. Un-opened bids (including price bids) will be returned to the respective bidders after release of Purchase order.

   Regarding Offers for EPS tenders that get rejected on PQC/ techno-commercial grounds, the bids for the subsequent parts will not be opened i.e., both technical bid and price bid (Parts-II & III)will not be opened in case of rejection on PQC ground and price bid (Part-II/Part-III, as applicable) will not be opened in case of rejection on techno-commercial ground.

6. After receipt of Purchase Order, supplier should submit required documents viz.,specified drawings, bill of materials, datasheets, catalogues, quality plan, test procedure, type test report , O & M Manuals and/or any other relevant documents as per Specification/Purchase Order, as and when required by BHEL/Customer.

7. Any deviation to the terms and conditions not mentioned in the quotation by supplier in response to this enquiry will not be considered, if put forth subsequently or after issue of Purchase Order, unless clarification is sought for by BHEL and agreed upon in the Purchase Order.

8. Evaluation shall be on the basis of delivered cost (i.e. “Total Cost to BHEL").

   “Total Cost to BHEL” shall include total basic cost, packing & forwarding charges, taxes and/or duties(as applicable), freight charges, taxes on Services, customs clearance charges for imported items, any other cost indicated by bidder for execution of the contract and loading factors (for non-compliance to BHEL Standard Commercial Terms & Conditions).

   Benefits arising out of Nil Import Duty on DEEC, EPCG, DFIA Projects, Physical Exports or such 100% exemptions (statutory benefits), project imports, customer reimbursements of statutory duties (like Basic Customs Duty and cess on customs duty), Input tax credits as applicable will also be taken into account for arriving at the Total cost to BHEL (wherever applicable and as indicated in SCC document of tender).

   For EPS tenders, it shall be noted that the prices (including discounts) vis-a-vis currency quoted in EPS portal only will be considered as Final for the purpose of evaluation of the lowest bidder.

   Bidder shall ensure to indicate the applicable taxes against each line item in online portal, failing to which the same will be considered as inclusive/NIL.

   In the course of evaluation, if more than one bidder happens to occupy L-1 status, effective L-1 will be decided by soliciting discounts from the respective L-1 bidders.

   Incase more than one bidder happens to occupy the L-1 status even after soliciting discounts, the L-1 bidder shall be decided by a toss/draw of lots, in the presence of the respective L-1 bidder(s) or their representative(s).

   Ranking will be done accordingly. BHEL’s decision in such situations shall be final and binding.

9. The evaluation currency for this tender shall be INR. For evaluation of offers in foreign currency, the exchange rate (TT selling rate of SBI) shall be taken as under:

   Single part bids: Date of tender opening

   Two/three part bids: Date of Part-I bid opening

   Reverse Auction: Date of Part-I bid opening

   In case of Performance Bank Guarantee (PBG) also, exchange rate will be considered as mentioned above for converting foreign currency to Indian currency and vice versa.

   If the relevant day happens to be a bank holiday, then the exchange rate as on the previous working day of the bank (SBI) shall be taken.

10. Ranking (L-1, L-2 etc.) shall be done only for the techno-commercially acceptable offers.
11. GeM Seller ID shall be mandatory before placement of order/award of contract for goods and services to the successful bidder(s), for orders exceeding Rs.25 lakhs (including all taxes etc.).

    Department of Expenditure (DoE) OM no.6/9/2020-PPD dated: 24.08.2020 may be referred in this regard.

E. <u>INFORMATION ON PAYMENT TERMS:</u>

1. All payments will be through Electronic Fund transfer (EFT). Vendor has to furnish necessary details as per BHEL standard format **(Refer Annexure IV)** for receiving all payments through NEFT.(Applicable for Indian vendors only).
2. In case of High Sea Sales transaction, customs clearance of the consignment landed on Indian Sea/Air ports will be done by BHEL based on the original HSS documents provided by vendors.

   All warehousing charges due to delay in submission of complete and or correct HSS documents to BHEL will be to supplier's account only. Such recovery will be made out of any of the available bills **(Refer Annexure V)**.
3. Statutory deductions, if any, will be made and the deduction certificate shall be issued.

   A. In case vendor does not provide PAN details, the TDS deduction shall be at the maximum percentage stipulated as per the provisions of Income Tax Act.

      In addition to the above, Foreign vendors shall also submit relevant details of their bankers like Swift Code, Banker's Name &Address etc.

   B. TDS deduction as per section 51 of CGST Act,2017 shall be applicable as per Gazette Notification No. 50/2018-Central Tax, Dated: 13th September 2018. TDS deduction is also applicable on purchase of goods as per the latest notification under section 194Q, and subsequent notification(s) as and when released by Govt. authorities.
4. Procurement of Goods/ Works/ Services/ Consultancy Services [under clause relating to "Income Tax and Corporate Tax" or "TDS" of Model ITBs]

   a) Provision w.r.t. TDS on Purchase of Goods under section 194Q of Income Tax Act applicable from 01.07.2021 is as under:

      i. TDS as applicable will be deducted by BHEL under section 194Q of the Income Tax Act, 1961 on Purchases exceeds, the amount of Rupees. 50 Lakhs or limit defined therein from time to time during the financial year under the Indian Income Tax act 1961.

      ii. Since BHEL is liable to deduct Income Tax TDS under section 194Q, the provision of TCS as per section 206C(1H) of the Income Tax Act, 1961 shall not be applicable.

b) Higher rate of TDS for non-filers of ITR as per Section 206AB of Income Tax Act, 1961, in case of any vendor who does not filed their Income Tax Return for both of the two previous years preceding to current year and aggregate amount of TDS is more than or equal to Rs. 50,000/- in each of those previous two years (or limit defined by Govt. from time to time), then TDS will be deducted at the higher of following rates:

(i) Twice the rate mentioned in relevant TDS section.

(ii) Twice the rate or rates in force

(iii) 5%

5. Incomplete documentation will not be accepted. Delayed submission of invoice / documents may result in corresponding delay in payment. In this connection, request to also refer clause: G about invoicing & payment formalities under GST regime.

   Applicable documents shall be submitted to the purchaser at the time of execution of supplies/services for availing GST input credits.

F. STANDARD PAYMENT TERMS OF BHEL-EDN:

PURCHASE ORDERS FOR:	**SUPPLY WITH SERVICE(S)**	**SUPPLY ONLY**
INDIGENOUS PROCUREMENT	a. 100% of basic value with taxes and freight will be paid in 45 days from the date of dispatch or 15 days from the date of submission of complete set of documentation, whichever is later. Note: In case PBG is not furnished, only 90% payment will be released against 100% claim without the consent of Vendor. This 10% basic amount withheld towards PBG will be paid either against submission of supplementary invoice & Original PBG (or) against supplementary invoice without PBG after expiry of Warranty period.	b. 100% of PO value with taxes and freight will be paid in 45 days from the date of dispatch or 15 days from the date of submission of complete set of documentation, whichever is later.
IMPORT PROCUREMENT	c. 100% of basic value will be paid against usance draft of 45 days from the date of AWB/BOL on submission of complete set of documents. Note: In case PBG is not furnished, only 90% payment will be released against 100% claim without the consent of Vendor. This 10% basic amount withheld towards PBG will be paid either against submission of supplementary invoice & Original PBG (or) against supplementary invoice without PBG after expiry of Warranty period.	d. 100% of PO value will be paid against usance draft of 45 days from the date of AWB/BOL on submission of complete set of documents.

HIGH-SEA SALES PROCUREMENT	e. 100% of basic value will be paid in 45 days from the date of signing of High Sea Sale agreement or 15 days from the date of submission of complete set of documentation, whichever is later Note: In case PBG is not furnished, only 90% payment will be released against 100% claim without the consent of Vendor. This 10% basic amount withheld towards PBG will be paid either against submission of supplementary invoice & Original PBG (or) against supplementary invoice without PBG after expiry of Warranty period.	f. 100% of basic value will be paid in 45 days from the date of signing of High Sea Sale agreement or 15 days from the date of submission of complete set of documentation, whichever is later.

g. Erection and Commissioning:

Evaluation methodology: Unless and otherwise specified in SCC, E&C charges should not be less than 10% of the main supply value. In case the quoted total E&C value is less than 10% of the main supply value, BHEL shall evaluate Bidders Price deducting differential amount from main supply price proportionally from all items and apportioning towards E&C charges.
Payment term: 100% E&C charges along with tax as applicable, will be paid in 15 days from the date of submission of supplementary invoice/documents against proof of completion of E&C.

h. Erection Supervision and Commissioning:

Evaluation methodology: Unless and otherwise specified in SCC, E&C charges should not be less than 5% of the main supply value. In case the quoted total E&C value is less than 5% of the main supply value, BHEL shall evaluate Bidders Price deducting differential amount from main supply price proportionally from all items and apportioning towards E&C charges.
Payment term: 100% E&C charges along with tax as applicable, will be paid in 15 days from the date of submission of supplementary invoice/documents against proof of completion of E&C.

i. Comprehensive Annual Maintenance Contract:

Evaluation methodology: Unless and otherwise specified in SCC, CAMC will be applicable for a period of 04 years from the date of expiry of warranty period (or) from the date of completion of commissioning of equipment, whichever is later and the total CAMC value should not be less than 20% of the main supply value. In case the quoted total CAMC value is less than 20% of the main supply value, BHEL shall evaluate Bidders Price deducting differential amount from main supply price proportionally from all items and apportioning towards CAMC charges.

Payment terms: 100% CAMC charges along with tax as applicable, will be paid in 15 days from the date of submission of supplementary invoice/documents against proof of completion of CAMC on yearly basis.

j. Terms of Payment for Training: 100% payment will be made in 45 days from the date of completion of Training or 15 days from the date of submission of complete set of invoice along with documentary evidence, whichever is later.

LOADING FACTORS FOR DEVIATION IN PAYMENT TERMS (APPLICABLE FOR IMPORT PROCUREMENT ONLY):

1) For offers received with Sight draft payment term in place of Usance draft, loading applicable will be 1.0% of basic value.

2) For offers received with Letter of Credit payment term with Usance of 45 days, loading applicable will be 2.5% of basic value.
Additional loading of 2% will be applicable for payment term as Letter of Credit at Sight.

k. Any payment term with credit period of less than 45 days for indigenous supply/HSS and any other variation of payment terms are liable for rejection.

l. Standard payment terms indicated in Clauses: F (a), (b), (c), (d), (e), (f), (g), (h), (i) & (j) will not attract any loading.

Note 1: Basic value of Purchase Order mentioned above will include all components of the purchase order and will exclude only taxes, duties, freight, training charges, E&C and AMC charges (wherever applicable). Wherever the Purchase Order is split into import portion and indigenous portion of supply, minimum % to be quoted for Services, wherever mentioned, will be of both purchase order values put together.

Note 2: In case of multiple packages/units in a power plant, payment of E&C charges will be processed on pro-rata basis.

Note 3: No deviation will be permitted from the duration of Guarantee/Warranty and/or Comprehensive Annual Maintenance Contract period specified in SCC.

G. Terms & Conditions to be complied under GST regime:

1. All invoices to contain BHEL-EDN (buyer) GSTIN number: 29AAACB4146P1ZB. However for CGST +SGST/UGST billing outside the state of Karnataka, invoice has to be generated with BHEL's Nodal Agency GSTIN number. Address of Nodal Agency along with GSTIN number will be provided by BHEL at the time of issuing dispatch clearance.

2. The Bidder shall mention Bidder's GSTIN number in all quotations and Invoices submitted.

3. The Bidder shall also mention HSN (Harmonized System of Nomenclature) / SAC (Services Accounting Code) mandatorily in all quotations and invoices submitted.

4. Invoice submitted should be in the format as specified under GST Laws viz., all details as mentioned in Invoice Rules like GST registration number(GSTIN), invoice number with date of issue, quantity, rate, value, taxes with nomenclature – CGST, SGST, UGST,IGST mentioned separately, HSN Code / SAC Code etc. Invoice should be submitted in original for buyer plus duplicate for credit availment.

5. Payment of GST to Vendor will be made only if it is matching with data uploaded by the Vendor in GST portal.

6. For invoices paid on Reverse charge basis – "Tax payable on reverse charge basis" to be mentioned on the invoice.

7. In case GST credit is delayed/denied to BHEL due to non/delayed receipt of goods and/or tax invoice or expiry of timeline prescribed in GST law for availing such ITC, or any other reasons not attributable to BHEL, GST amount will be recoverable from vendor along with interest levied/ leviable on BHEL.

8. In case vendor delays declaring such invoice in his return and GST credit availed by BHEL is denied or reversed subsequently as per GST law, GST amount paid by BHEL towards such ITC reversal as per GST law will be recoverable from vendor/contractor along with interest levied/ leviable on BHEL.

9. Vendor should intimate BHEL immediately on the same date of invoicing without any delay.

10. In case of discrepancy in the data uploaded by supplier in the GSTN portal or in case of any shortages or rejection in the supply, then BHEL will not be able to avail the tax credit and will notify the supplier of the same. Supplier has to rectify the data discrepancy in the GSTN portal or issue credit note (details to be uploaded in GSTN portal) for the shortages or rejections in the supplies, within the calendar month notified by BHEL.

11. Bidders to note that Rules & Regulations pertaining to E-way bill system are to be strictly adhered to, as and when notified by Govt. authorities.

12. As per Notification 88/2020-Central Tax dated 10th November 2020 (applicable w.e.f. 01 January 2021), the turnover for applicability of E-invoicing provisions has been reduced from 500 crores to 100 crores. In other words, registered person [other than a SEZ unit and those referred in Rule 54(2), 54(3), 54(4) and 54(4A) of the CGST Rules], whose aggregate turnover in any preceding financial year from 2017-18 onwards exceeds 100 crores, is required to comply with the requirement of IRN and QR code in respect of supply of goods or services or both to a registered person or for exports.

H. <u>Performance bank guarantee (PBG):</u>

Performance bank guarantee (PBG) will be applicable as called in the tender documents. Unless otherwise specified in the SCC, the PBG against performance of the contract shall be valid for a period of 24 months from the date of dispatch of goods + claim period of 03 months, for a value equal to 10 % of the basic value of the purchase order which will include all components of the purchase order and will exclude only taxes, duties, freight, training charges, E&C and AMC charges (wherever applicable).

1. The BG issued in Indian Rupees by Banks in India is to be executed on Non-Judicial Stamp paper/e-stamp paper of appropriate value as per Stamp Act prevailing in the State(s) where the BG is submitted or is to be acted upon or the rate prevailing in the State where the BG was executed, whichever is higher. The Stamp Paper/e-stamp paper shall be purchased in the name of Vendor/Bank issuing the guarantee.
2. No deviation for the duration and value of PBG will be permitted.
3. PBG shall be from any of the BHEL consortium of bankers **(refer Annexure VI)**.
4. PBGs from nationalized banks are also acceptable.
5. PBG should be sent directly by the bank to the dealing executive mentioned in the purchase order located at the address mentioned in the purchase order.
6. PBG should be in the format specified **(refer Annexure VII)**. No deviation to this format will be allowed. However in case BHEL changes the PBG format, bidder shall honor the same.
7. Bank Guarantee should be enforceable in Bangalore.
8. In Case of Bank Guarantees submitted by Foreign Vendors-
   a. From Nationalized/Public Sector / Private Sector/ Foreign Banks (BG issued by Branches in India) can be accepted subject to the condition that the Bank Guarantee should be enforceable in Bangalore.
   b. From Foreign Banks (wherein Foreign Vendors intend to provide BG from local branch of the Vendor country's Bank)

   b.1 Please note that Bank Guarantee issued by any of the Consortium Banks only will be accepted by BHEL. As such, Foreign Vendor needs to make necessary arrangements for issuance of Counter-Guarantee by Foreign Bank in favour of the Indian Bank's (BHEL's Consortium Bank) branch in India.

It shall be noted that all charges for issuance of Bank Guarantee/ counter- Guarantee should be borne by the Foreign Vendor.

b.2 In case, Foreign Vendors intend to provide BG from Overseas Branch of our Consortium Bank (e.g. if a BG is to be issued by SBI Frankfurt), the same is acceptable. However, the procedure at sl.no. b.1 is required to be followed.

b.3 The BG issued may preferably be subject to Uniform Rules for Demand Guarantees (URDG) 758 (as amended from time to time).

9. Expired PBGs will be returned only after expiry of the claim period.
10. PBG shall not be applicable for spares.

I. PURCHASE PREFERENCE FOR MSE(MICRO AND SMALL ENTERPRISES) VENDORS:

Purchase preference will be given to MSEs as defined in Public Procurement Policy for Micro and Small Enterprises (MSEs) Order, 2012 dated 23.03.2012 issued by Ministry of Micro, Small and Medium Enterprises and its subsequent Orders/Notifications issued by concerned Ministry. If the bidder wants to avail the Purchase preference, the bidder must be the manufacturer of the offered product in case of bid for supply of goods. Traders are excluded from the purview of Public Procurement Policy for Micro and Small Enterprises. Relevant documentary evidence in this regard shall be uploaded along with the bid in respect of the offered product. Purchase preference to Micro and Small Enterprises clause in the bid, the same will get precedence over this clause.

1. If tendered quantity is Splitable: In tender, participating MSEs quoting price within price band of L1+15 percent shall also be allowed to supply a portion of requirement by bringing down their price to L1 price in a situation where L1 price from someone other than a MSE and such MSE shall be allowed to supply at least 25% of total tendered value. In case of more than one such MSE, the supply shall be shared proportionately (to tendered quantity).

- 3% of the 25% will be earmarked for women owned MSEs.
- 25% of the 25% (i.e., 6.25% of the total enquired quantity) will be earmarked for SC/ST owned MSE firms provided conditions as mentioned in (1) & (2) are fulfilled.
- In case where no SC/ST category firms are meeting the conditions mentioned in (1) and (2) or have not participated in the tender, the 6.25% of earmarked quantity for SC/ST owned MSE firms will be distributed among the other eligible MSE vendors who have participated in the tender.

2. If tendered quantity is Non-Splitable: If L-1 is not an MSE and MSE Seller (s) has/have quoted price within L-1+ 15% of margin of purchase preference /price band defined in relevant policy, such Seller shall be given opportunity to match L-1 price and contract will be awarded for 100% of total value.

J. INTEGRITY COMMITMENT IN THE TENDER PROCESS, AND EXECUTION OF CONTRACTS:

1. Commitment by BHEL: BHEL commits to take all measures necessary to prevent corruption in connection with the Tender process and execution of the Contract. BHEL will, during the tender process, treat all bidder / suppliers in a transparent and fair manner, and with equity.

2. Commitment by Bidder(s)/ Contractor(s):

   a. The Bidder(s)/ Contractor(s) commit(s) to take all measures to prevent corruption and will not directly or indirectly try to influence any decision or benefit which he is not legally entitled to.
   b. The Bidder(s)/ Contractor(s) will not enter with other Bidder(s) into any undisclosed agreement or understanding or any actions to restrict competition.
   c. The Bidder(s)/ Contractor(s) will not commit any offence under the relevant Acts. The Bidder(s)/ Contractor(s) will not use improperly, for purposes of competition or personal gain or pass on to others, any information or document provided by BHEL as part of business relationship.

d. The Bidder(s)/ Contractor(s) will, when presenting his bid, disclose any and all payments he has made, and is committed to or intends to make to agents, brokers or any other intermediaries in connection with the award of the contract and shall adhere to the relevant guidelines issued from time to time by Government of India/ BHEL.

If the Bidder(s) / Contractor(s), before award or during execution of the Contract commit(s) a transgression of the above or in any other manner such as to put his reliability or credibility in question, BHEL is entitled to disqualify the Bidder(s) / Contractor (s) from the tender process or terminate the contract and/ or take suitable action as deemed fit.

K. Integrity Pact (IP):

a) IP is a tool to ensure that activities and transactions between the Company and its Bidders/ Contractors are handled in a fair, transparent and corruption free manner.
Following independent External Monitors (IEMs) on the present panel have been appointed by BHEL with the approval of CVC to oversee implementation of IP in BHEL.

Sl	IEM	Email
1.	Shri Otem Dai, IAS (Retd.)	iem1@bhel.in
2.	Shri Bishwamitra Pandey, IRAS (Retd.)	iem2@bhel.in
3.	Shri Mukesh Mittal, IRS (Retd.)	iem3@bhel.in

b) Please refer Section-8 of the IP for Role and Responsibilities of IEMs (Annexure I). In case of any complaint arising out of the tendering process, the matter may be referred to any of the above IEM(s). All correspondence with the IEM/s shall be done through email only.

Note: No routine correspondence shall be addressed to the IEM (phone/ post/ email) regarding the clarifications, time extensions or any other administrative queries, etc. on the tender issued. All such clarification/ issues shall be addressed directly to the tender issuing (procurement) department's officials whose contact details are indicated in SCC document of tender.

Annexure

Annexure I

Guidelines for Indian Agents

- **Definition of Indian Agent**: An Indian Agent of foreign prinicipal is an individual, a partnership, an association of persons, a private or pubile company, that carries our specific obligation(s) towards processing of BHEL tender or finalization or execution of BHEL's contract on behalf of the foreign supplier.

In case of yes, vendor to note the following and reply accordingly:

i. BHEL shall deal directly with foreign vendors, wherever required, for procurement of goods. However, if the foreign principal desires to avail of the services of an Indian agent, then the foreign principal should ensure compliance to regulatory guidelines - which require mandatory submission of an Agency Agreement.

ii. It shall be incumbent on the Indian agent and the foreign principal to adhere to the relevant guidelines of Government of India, issued from time to time.

iii. The Agency Agreement should specify the precise relationship between the foreign OEM / foreign principal and their Indian agent and their mutual interest in the business. All services to be rendered by agent/ associate, whether of general nature or in relation to the particular contract, must be clearly stated by the foreign supplier/ Indian agent. Any payment, which the agent or associate receives in India or abroad from the OEM, whether as commission or as a general retainer fee should be brought on record in the Agreement and be made explicit in order to ensure compliance to laws of the country.

iv. Any agency commission to be paid by BHEL to the Indian agent shall be in Indian currency only.

v. Tax deduction at source is applicable to the agency commission paid to the Indian agent as per the prevailing rules.

vi. In the absence of any agency agreement, BHEL shall not deal with any Indian agent (authorized representatives / associate / consultant, or by whatever name called) and shall deal directly with the foreign principal only for all correspondence and business purposes.

vii. The "Guidelines for Indian Agents of Foreign Suppliers" enclosed at annexure –'A' shall apply in all such cases.

viii. The supply and execution of the Purchase Order (including indigenous supplies/ service) shall be in the scope of the OEM/ foreign principal. The OEM/ foreign principal should submit their offer inclusive of all indigenous supplies/ services and evaluation will be based on 'total cost to BHEL'. In case OEM/ foreign principal recommends placement of order(s) towards indigenous portion of supplies/ services on Indian supplier(s)/ agent on their behalf, the credentials/ capacity/ capability of the Indian supplier(s)/ agent to make the supplies/ services shall be checked by BHEL as per the extant guidelines of Supplier Evaluation, Approval & Review Procedure (SEARP), before opening of price bids. In this regard, details may be checked as per Annexure-B (copy enclosed). It will be the responsibility of the OEM/ foreign principal to get acquainted with the evaluation requirements of Indian supplier/ agent as per SEARP available on www.bhel.com.

The responsibility for successful execution of the contract (including indigenous supplies/ services) lies with the OEM/ foreign principal. All bank guarantees to this effect shall be in the scope of the OEM/ foreign principal.

---x---

Vendor's Signature with Seal

Annexure-A

Guidelines for Indian Agents of Foreign Suppliers

1.0 There shall be compulsory registration of agents for all Global (Open) Tender and Limited Tender. An agent who is not registered with BHEL shall apply for registration in the registration form in line with SEARP.

1.1 Registered agents will file an authenticated Photostat copy duly attested by a Notary Public/Original certificate of the Principal confirming the agency agreement and giving the status being enjoyed by the agent and the commission/ remuneration/ salary/ retainership being paid by the principal to the agent before the placement of order by BHEL.

1.2 Wherever the Indian representatives have communicated on behalf of their principals and the foreign parties have stated that they are not paying any commission to the Indian agents, and the Indian representative is working on the basis of salary or as retainer, a written declaration to this effect should be submitted by the party (i.e. Principal) before finalizing the order.

2.0 Disclosure of particulars of agents/ representatives in India, if any.

2.1 Tenderers of Foreign nationality shall furnish the following details in their offers:

2.1.1 The Bidder(s)/ Contractor(s) of foreign origin shall disclose the name and address of the agents/ representatives in India if any and the extent of authorization and authority given to commit the Principals. In case the agent/ representative be a foreign Company, it shall be confirmed whether it is existing Company and details of the same shall be furnished.

2.1.2 The amount of commission/ remuneration included in the quoted price(s) for such agents/ representatives in India.

2.1.3 Confirmation of the Tenderer that the commission/ remuneration, if any, payable to his agents/ representatives in India, may be paid by BHEL in Indian Rupees only.

2.2 Tenderers of Indian Nationality shall furnish the following details in their offers:

2.2.1 The Bidder(s)/ Contractor(s) of Indian Nationality shall furnish the name and address of the foreign principals, if any, indicating their nationality as well as their status, i.e. whether manufacturer or agents of manufacturer holding the Letter of Authority of the Principal specifically authorizing the agent to make an offer in India in response to tender either directly or through the agents/ representatives.

2.2.2 The amount of commission/ remuneration included in the price (s) quoted by the Tenderer for himself.

2.2.3 Confirmation of the foreign principals of the Tenderer that the commission/ remuneration, if any, reserved for the Tenderer in the quoted price(s), may be paid by BHEL in India in equivalent Indian Rupees on satisfactory completion of the Project or supplies of Stores and Spares in case of operation items.

2.3 In either case, in the event of contract materializing, the terms of payment will provide for payment of the commission/ remuneration, if any payable to the agents/ representatives in India in Indian Rupees on expiry of 90 days after the discharge of the obligations under the contract.

2.4 Failure to furnish correct and detailed information as called for in paragraph 2.0 above will render the concerned tender liable to rejection or in the event of a contract materializing, the same liable to termination by BHEL. Besides this there would be a penalty of banning business dealings with BHEL or damage or payment of a named sum.

—x—

ANNEXURE - II
LIST OF INTERNATIONAL GATEWAY AIRPORTS

For air based consignment, terms of delivery will be on FCA basis from following listed airports only. Vendors are requested to verify this list for use before submission of offer.

SCHEDULE NO	COUNTRY	CURRENCY CODE	AIRPORT
D01	UK	GBP	LONDON (HEATHROW)
D02	UK	GBP	NEW CASTLE
D03	UK	GBP	OXFORD. CHETLAM
D04	UK	GBP	BRISTOL. WELLINGBOROUGH
D05	UK	GBP	BIRMINGHAM
DO6	UK	GBP	EAST MIDLANDS
D07	UK	GBP	MANCHESTER
D08	UK	GBP	LEEDS
D09	UK	GBP	GLASGOW
D10	FRANCE	EURO	PARIS (ROISSY) & LYON
D11	SWEDEN	EURO	STOCKHOLM
D12	SWEDEN	EURO	GOTHENBERG & MALMO
D13	ITALY	EURO	ROMA, MILAN
D14	ITALY	EURO	TURIN, BOLOGNA, FLORENCE
D15	NETHERLANDS	EURO	AMSTERDAM, ROTTERDAM
D16	AUSTRIA	EURO	VIENNA, LINZ, GRAZ
D17	BELGIUM	EURO	ANTWERP, BRUSSELS
D18	DENMARK	DKK	COPENHAGEN
D19	JAPAN	JPY	TOKYO, OSAKA
D20	SINGAPORE	SGD	SINGAPORE
D21	CANADA	CAD	TORONTO
D22	CANADA	CAD	MONTREAL
D23	USA	USD	NEW YORK, BOSTON
D24	USA	USD	CHICAGO
D25	USA	USD	SAN FRANCISCO, LOS ANGELES
D26	USA	USD	ALANTA, HOUSTON
D27	GERMANY	EURO	MUNICH, KOLN, DUSSELDORF, HANNOVER, HAMBURG, STUTTGART, DAMSTADT, MANIHIEM, NURUMBERG
D28	GERMANY	EURO	FRANKFURT
D29	GERMANY	EURO	BERLIN
D30	SWITZERLAND	SFR	BASLE, ZURICH, GENEVA
D31	SPAIN	EURO	BARCELONA
D32	AUSTRALIA	AUD	SYDNEY
D33	AUSTRALIA	AUD	MELBOURNE
D34	AUSTRALIA	AUD	PERTH
D35	CZECH	EURO	PRAGUE
D36	HONG KONG	HKD	HONG KONG
D37	NEW ZELAND	NZD	AUCKLAND
D38	RUSSIA	USD	MOSCOW
D39	SOUTH KOREA	USD	KIMPO INTERNATIONAL, INCHEON
D40	FINLAND	EURO	HELSINKI
D41	ROMANIA	EURO	BUCHAREST
D42	NORWAY	EURO	OSLO
D43	IRELAND	EURO	DUBLIN
D44	ISRAEL	USD	TEL AVIV
D45	UAE	USD	DUBAI
D46	OMAN	USD	MUSCAT
D47	EGYPT	USD	CAIRO
D48	TAIWAN	USD	TAIPEI
D49	UKRAINE	USD	KIEV
D50	CHINA	USD	SHANGHAI, SHENZHEN
D51	PHILIPINES	USD	MANILA
D52	MALAYSIA	USD	KUALALUMPUR, PE NANG
D53	CYPRUS	USD	LARNACA
D54	SOUTH AFRICA	USD	JOHANNESBERG, DURBAN
D55	SLOVAKIA	EURO	BARTISLOVA
D56	SAUDI ARABIA	SAR	RIYADH
D57	TURKEY	EURO	ISTANBUL
D58	THAILAND	USD	BANGKOK
D59	BRAZIL	USD	SAO PAULO, RIO DE JANEIRO

ANNEXURE – III

DISCREPANCY IN WORDS & FIGURES – QUOTED IN PRICE BID

Following guidelines will be followed in case of discrepancy in words & figures-quoted in price bid:

(a) If, in the price structure quoted for the required goods/services/works, there is discrepancy between the unit price and the total price (which is obtained by multiplying the unit price by the quantity), the unit price shall prevail and the total price corrected accordingly, unless in the opinion of the purchaser there is an obvious misplacement of the decimal point in the unit price, in which case the total price as quoted shall govern and the unit price corrected accordingly.

(b) If there is an error in a total corresponding to the addition or subtraction of subtotals, the subtotals shall prevail and the total shall be corrected; and

(c) If there is a discrepancy between words and figures, the amount in words shall prevail, unless the amount expressed in words is related to an arithmetic error, in which case the amount in figures shall prevail subject to (a) and (b) above.

(d) If there is such discrepancy in an offer, the same shall be conveyed to the bidder with target date upto which the bidder has to send his acceptance on the above lines and if the bidder does not agree to the decision of the purchaser, the bid is liable to be ignored.

ANNEXURE - IV

Electronic Funds Transfer (EFT) OR Paylink Direct Credit Form

Please Fill up the form in **CAPITAL LETTERS** only.
TYPE OF REQUEST(Tick one): _____ CREATE _____ CHANGE

BHEL Vendor / Supplier Code:
Company Name :
Permanent Account Number(PAN):
Address

City: PINCODE STATE

Contact Person(s)
Telephone No:
Fax No:
e-mail id:

1 Bank Name:
2 Bank Address:

3 Bank Telephone No:
4 Bank Account No:
5 Account Type: Savings/Cash Credit
6 9 Digit Code Number of Bank and branch appearing on MICR cheque issued by Bank
7 Bank IFSC Code(applicable for NEFT)
8 Bank IFSC code(applicable for RTGS) (Indian Financial System Code)

A I hereby certify that the particulars given above are true, correct and complete and that I, as a representative for the above named Company, hereby authorise BHEL, EDN, Bangalore to electronically deposit payments to the designated bank account.
B If the transaction is delayed or not effected at all for reasons of incomplete or incorrect information, I would not hold BHEL / transfering Bank responsible.
C This authority remains in full force until BHEL, EDN,Bangalore receives written notification requesting a change or cancellation.
D I have read the contents of the covering letter and agree to discharge the responsibility expected of me as a participant under ECS / EFT.

Date:

Authorised Signatory:
Designation: Telephone No. with STD Code

Company Seal

Bank Certificate

We certify that_____has an Account No_____ with us and we confirm that the bank details given above are correct as per our records.

Date: (.....)
Place: Signature

Please return completed form **along with a blank cancelled cheque or photocopy** thereof to:
Bharath Heavy Electricals Ltd,
Attn:
Electronics Division, Mysore Road,
BANGALORE - 560 026
In case of any Querry, please call concerned purchase executive.

ANNEXURE - V

PRESENT PROCEDURE FOR SALE IN TRANSIT (HIGH SEA SALES)

In case of High Sea Sales, vendor should submit following documents:

1. **ORIGINAL HIGH SEA SALES AGREEMENT**
   - Sale agreement (on Rs. 200/- non-judicial stamp paper & notarised with 2 witnesses with identity) has to be signed between BHEL and the Party importing material. The date of the sale documents should be in between the date of House Air Way Bill / Bill of Lading and before landing of the goods in Indian origin.
   - Following shall be included in the High Sea Sales Agreement:
     "THE BUYER ALSO UNDERTAKE DISCHARGES, THE OBLIGATION AND FULFILLMENT OF CONDITIONS, IF ANY, ATTACHED TO THE IMPORTATION, ASSESSMENT AND CLEARANCE OF THE GOODS IN TERMS CUSTOMS TARIFF ACT 1975, THE CUSTOMS ACT 1962 & RULES & REGULATIONS MADE THERE UNDER AND OTHER RELEVANT ACTS, ORDERS, NOTIFICATIONS".

2. **ORIGINAL INVOICES: INDIGENOUS RUPEE INVOICE & FOREIGN CURRENCY INVOICE**
   - Prices should be C.I.F., designated airport/seaport basis.
   - I.E.C., C.S.T., K.S.T. Nos. to be mentioned.
   - Description of item (Nomenclature), Unit & Quantity in both the Foreign Currency & the Indigenous Invoice in Rupee shall be exactly as per Purchase Order Description of item, Quantity and Unit. The Indigenous Invoice value shall be exactly as per Purchase Order value.
   - Seller should give Foreign Currency Invoice from the original consignor. The Foreign Currency Invoice value should be at least 2% (two per cent) less than the Indigenous Rupee Invoice value in equivalent foreign currency.

4. **ORIGINAL HOUSE AIR WAY BILL/ BILL OF LADING**
   - The sale agents should duly endorse House Air Way Bill (HAWB) for air shipments or original Bill of Lading (O.B.L.) for sea shipments and Foreign Currency Invoice in favour of BHEL-EDN.

5. **ORIGINAL CARGO ARRIVAL NOTICE FROM FORWARDER.**

6. **ORIGINAL DELIVERY ORDER ISSUED IN NAME OF BHEL-EDN.**

7. **ORIGINAL PACKING LIST.**

8. **A LETTER TO THE COMMISSIONER OF CUSTOMS FOR EFFECTING ABOVE SALE.**

9. **A LETTER TO THE DEPUTY ASSESSOR (OCTROI) FOR EFFECTING ABOVE SALE IN FAVOUR OF BHEL.**

REMARKS: In case vendor needs any clarifications on the above, the same may be sought in writing.

ELECTRONICS DIVISION, BANGALORE

Annexure-VI

BHEL MEMBER BANKS (LIST OF CONSORTIUM BANKS)

Bank Guarantee (BG) shall be issued from the following banks only:

Sl. No.	Nationalised Banks	Sl. No.	Public Sector Banks
1	Allahabad Bank	18	IDBI
2	Andhra Bank		
3	Bank of Baroda	Sl. No.	**Foreign Banks**
4	Canara Bank	19	CITI Bank N.A
5	Corporation Bank	20	Deutsche Bank AG
6	Central Bank	21	The Hongkong and Shanghai Banking Corporation Ltd. (HSBC)
7	Indian Bank	22	Standard Chartered Bank
8	Indian Overseas Bank	23	J P Morgan
9	Oriental Bank of Commerce		
10	Punjab National Bank	**Sl. No.**	**Private Banks**
11	Punjab & Sindh Bank	24	Axis Bank
12	State Bank of India	25	The Federal Bank Limited
13	Syndicate Bank	26	HDFC Bank
14	UCO Bank	27	Kotak Mahindra Bank Ltd
15	Union Bank of India	28	ICICI Bank
16	United Bank of India	29	IndusInd Bank
17	Vijaya Bank	30	Yes Bank

Note:

- All BGs must be issued from BHEL consortium banks listed above.
- This list is subject to changes. Hence vendors are requested to check this list every time before issuing BGs.
- Bank Guarantees issued by Co-operative Banks/Financial Institutions cannot be accepted under any circumstance.

Annexure-VII

BANK GUARANTEE FOR PERFORMANCE SECURITY

Bank Guarantee No:

Date:

To

NAME

& ADDRESSES OF THE BENEFICIARY

Dear Sirs,

In consideration of Bharat Heavy Electricals Limited (hereinafter referred to as the 'Employer' which expression shall unless repugnant to the context or meaning thereof, include its successors and permitted assigns) incorporated under the Companies Act, 1956 and having its registered office at _____[1] through its Unit at.....(name of the Unit) having awarded to (Name of the Vendor / Contractor / Supplier) with its registered office at_____[2] hereinafter referred to as the ' Vendor / Contractor / Supplier ', which expression shall unless repugnant to the context or meaning thereof, include its successors and permitted assigns), a contract Ref No.....dated .....[3] valued at Rs.....[4] (Rupees ----------)/FC.....(in words.....) for .....[5] (hereinafter called the 'Contract') and the Vendor / Contractor / Supplier having agreed to provide a Contract Performance Bank Guarantee, equivalent to .....% (.... Percent) of the said value of the Contract to the Employer for the faithful performance of the Contract,

we, ..., (hereinafter referred to as the Bank), having registered/Head office at ..... and inter alia a branch at ..... being the Guarantor under this Guarantee, hereby, irrevocably and unconditionally undertake to forthwith and immediately pay to the Employer any sum or sums upto a maximum amount of Rs -- ---------- [6] (Rupees ----------) without any demur, immediately on first demand from the Employer and without any reservation, protest, and recourse and without the Employer needing to prove or demonstrate reasons for its such demand.

Any such demand made on the Bank shall be conclusive as regards the amount due and payable by the Bank under this guarantee. However, our liability under this guarantee shall be restricted to an amount not exceeding Rs. _____.

We undertake to pay to the Employer any money so demanded notwithstanding any dispute or disputes raised by the Vendor / Contractor / Supplier in any suit or proceeding pending before any Court or Tribunal, Arbitrator or any other authority, our liability under this present being absolute and unequivocal.

The payment so made by us under this Guarantee shall be a valid discharge of our liability for payment thereunder and the Vendor / Contractor / Supplier shall have no claim against us for making such payment.

We the .....bank further agree that the guarantee herein contained shall remain in full force and effect during the period that would be taken for the performance of the said Contract/satisfactory completion of the performance guarantee period as per the terms of the Contract and that it shall continue to be enforceable till

all the dues of the Employer under or by virtue of the said Contract have been fully paid and its claims satisfied or discharged.

We .....BANK further agree with the Employer that the Employer shall have the fullest liberty without our consent and without affecting in any manner our obligations hereunder to vary any of the terms and conditions of the said Contract or to extend time of performance by the said Vendor / Contractor / Supplier from time to time or to postpone for any time or from time to time any of the powers exercisable by the Employer against the said Vendor / Contractor / Supplier and to forbear or enforce any of the terms and conditions relating to the said Contract and we shall not be relieved from our liability by reason of any such variation, or extension being granted to the said Vendor / Contractor / Supplier or for any forbearance, act or omission on the part of the Employer or any indulgence by the Employer to the said Vendor / Contractor / Supplier or by any such matter or thing whatsoever which under the law relating to sureties would but for this provision have effect of so relieving us.

The Bank also agrees that the Employer at its option shall be entitled to enforce this Guarantee against the Bank as a principal debtor, in the first instance without proceeding against the Vendor / Contractor / Supplier and notwithstanding any security or other guarantee that the Employer may have in relation to the Vendor / Contractor / Supplier 's liabilities.

This Guarantee shall remain in force upto and including..... [7] and shall be extended from time to time for such period as may be desired by Employer.

This Guarantee shall not be determined or affected by liquidation or winding up, dissolution or change of constitution or insolvency of the Vendor / Contractor / Supplier but shall in all respects and for all purposes be binding and operative until payment of all money payable to the Employer in terms thereof.

Unless a demand or claim under this guarantee is made on us in writing on or before the .....[8]we shall be discharged from all liabilities under this guarantee thereafter.

We, ... BANK lastly undertake not to revoke this guarantee during its currency except with the previous consent of the Employer in writing.

Notwithstanding anything to the contrary contained hereinabove:

a) The liability of the Bank under this Guarantee shall not exceed..... [6]
b) This Guarantee shall be valid up to .....[7]
c) Unless the Bank is served a written claim or demand on or before _____[8] all rights under this guarantee shall be forfeited and the Bank shall be relieved and discharged from all liabilities under this guarantee irrespective of whether or not the original bank guarantee is returned to the Bank.

We, _____ Bank, have power to issue this Guarantee under law and the undersigned as a duly authorized person has full powers to sign this Guarantee on behalf of the Bank.

For and on behalf of
(Name of the Bank)

Dated.....

Place of Issue.....

[1] *NAME AND ADDRESS OF EMPLOYER I.e Bharat Heavy Electricals Limited*

[2] *NAME AND ADDRESS OF THE VENDOR /CONTRACTOR / SUPPLIER.*

[3] *DETAILS ABOUT THE NOTICE OF AWARD/CONTRACT REFERENCE*

[4] *CONTRACT VALUE*

[5] *PROJECT/SUPPLY DETAILS*

[6] *BG AMOUNT IN FIGURES AND WORDS*

[7] *VALIDITY DATE*

[8] *DATE OF EXPIRY OF CLAIM PERIOD*

Annexure-VIII

Certificate by Chartered Accountant on letterhead

This is to certify that M/s _____ (hereinafter referred to as 'enterprise') having PAN Number _____and UDYAM Registration Number _____, registered office at _____ _____ is falling under the category _____ (**Micro / Small / Medium**) under MSMED Act 2006. (Copy of UDYAM Registration Certificate to be enclosed).

The said classification of _____ (**Micro / Small / Medium**) is arrived at based on the Notifications / guidelines / clarifications issued under Micro, Small and Medium Enterprises Development Act, 2006 including the notification S.O.2119 (E) dated 26th June 2020.

The Investment of the enterprise in Plant and Machinery or Equipment as at 31st March 2020 as per Clause 4 of the Notification is _____ (Rupees in Lakhs).

The turnover of the Enterprise for the period ending 31st March 2020 as per Clause 5 of the Notification is _____ (Rupees in Lakhs).

Date:

(Signature) Name-
Membership number-

Seal of Chartered Accountant with UDIN reference

Annexure-1

INTEGRITY PACT

Between

Bharat Heavy Electricals Ltd. (BHEL), a company registered under the Companies Act 1956 and having its registered office at "BHEL House", Siri Fort, New Delhi - 110049 (India) hereinafter referred to as "The Principal", which expression unless repugnant to the context or meaning hereof shall include its successors or assigns of the ONE PART

and

_____, (description of the party along with address), hereinafter referred to as "The Bidder/ Contractor" which expression unless repugnant to the context or meaning hereof shall include its successors or assigns of the OTHER PART

Preamble

The Principal intends to award, under laid-down organizational procedures, contract/s for _____

_____ (hereinafter referred to as "Contract"). The Principal values full compliance with all relevant laws of the land, rules and regulations, and the principles of economic use of resources, and of fairness and transparency in its relations with its Bidder(s)/ Contractor(s).

In order to achieve these goals, the Principal will appoint panel of Independent External Monitor(s) (IEMs), who will monitor the tender process and the execution of the contract for compliance with the principles mentioned above.

Section 1- Commitments of the Principal

1.1 The Principal commits itself to take all measures necessary to prevent corruption and to observe the following principles: -

1.1.1 No employee of the Principal, personally or through family members, will in connection with the tender for, or the execution of a contract, demand, take a promise for or accept, for self or third person, any material or immaterial benefit which the person is not legally entitled to.

1.1.2 The Principal will, during the tender process treat all Bidder(s) with equity and reason. The Principal will in particular, before and during the tender process, provide to all Bidder(s) the same information and will not provide to any Bidder(s) confidential/ additional information through which the Bidder(s) could obtain an advantage in relation to the tender process or the contract execution.

1.1.3 The Principal will exclude from the process all known prejudiced persons.

1.2 If the Principal obtains information on the conduct of any of its employees which is a penal offence under the Indian Penal Code 1860 and Prevention of Corruption Act 1988 or any other statutory penal enactment, or if there be a substantive suspicion in this regard, the Principal will inform its Vigilance Office and in addition can initiate disciplinary actions.

Section 2 - Commitments of the Bidder(s)/ Contractor(s)

2.1 The Bidder(s)/ Contractor(s) commit himself to take all measures necessary to prevent corruption. The Bidder(s)/ Contractor(s) commits himself to observe the following principles during participation in the tender process and during the contract execution.

ಎ. ಸರವಣ ಬಾಬು, ವ್ಯವಸ್ಥಾಪಕರು/ನಿ.ಆ.-ಎಂ.ಎಂ.-ಪಿ.ಆರ್.
ए. सरवण बाबु, प्रबंधक/सी.ई.-एम.एम.-पी.आर.
A. SARAVANA BABU, MANAGER/CE-MM-PR
BHEL-EDN, MYSURU ROAD, BENGALURU-560026

2.1.1 The Bidder(s)/ Contractor(s) will not, directly or through any other person or firm, offer, promise or give to the Principal or to any of the Principal's employees involved in the tender process or the execution of the contract or to any third person any material, immaterial or any other benefit which he/ she is not legally entitled to, in order to obtain in exchange any advantage of any kind whatsoever during the tender process or during the execution of the contract.

2.1.2 The Bidder(s)/ Contractor(s) will not enter with other Bidder(s) into any illegal or undisclosed agreement or understanding, whether formal or informal. This applies in particular to prices, specifications, certifications, subsidiary contracts, submission or non-submission of bids or any other actions to restrict competitiveness or to introduce cartelization in the bidding process.

2.1.3 The Bidder(s)/ Contractor(s) will not commit any penal offence under the relevant Indian Penal Code (IPC) and Prevention of Corruption Act; further the Bidder(s)/ Contractor(s) will not use improperly, for purposes of competition or personal gain, or pass on to others, any information or document provided by the Principal as part of the business relationship, regarding plans, technical proposals and business details, including information contained or transmitted electronically.

2.1.4 Foreign Bidder(s)/ Contractor(s) shall disclose the name and address of agents and representatives in India and Indian Bidder(s)/ Contractor(s) to disclose their foreign principals or associates. The Bidder(s)/ Contractor(s) will, when presenting his bid, disclose any and all payments he has made, and is committed to or intends to make to agents, brokers or any other intermediaries in connection with the award of the contract.

2.2 The Bidder(s)/ Contractor(s) will not instigate third persons to commit offences outlined above or be an accessory to such offences.

2.3 The Bidder(s)/ Contractor(s) shall not approach the Courts while representing the matters to IEMs and shall await their decision in the matter.

Section 3 - Disqualification from tender process and exclusion from future contracts

If the Bidder(s)/ Contractor(s), before award or during execution has committed a transgression through a violation of Section 2 above, or acts in any other manner such as to put his reliability or credibility in question, the Principal is entitled to disqualify the Bidder(s)/ Contractor(s) from the tender process , terminate the contract, if already awarded, exclude from future business dealings and/ or take action as per the separate "Guidelines on Banning of Business dealings with Suppliers/ Contractors", framed by the Principal.

Section 4 - Compensation for Damages

4.1 If the Principal has disqualified the Bidder (s) from the tender process before award / order acceptance according to Section 3, the Principal is entitled to demand and recover the damages equivalent to Earnest Money Deposit/ Bid Security.

4.2 If the Principal is entitled to terminate the Contract according to Section 3, or terminates the Contract in application of Section 3 above , the Bidder(s)/ Cotractor (s) transgression through a violation of Section 2 above shall be construed breach of contract and the Principal shall be-entitled to demand and recover from the Contractor an amount equal to 5% of the contract value or the amount equivalent to Security Deposit/ Performance Bank Guarantee , whichever is higher, as damages, in addition to and without prejudice to its right to demand and recover compensation for any other loss or damages specified elsewhere in the contract.

ಎ. ಸರವಣ ಬಾಬು, ವ್ಯವಸ್ಥಾಪಕರು/ನಿ.ಉ-ಎಂ.ಎಂ.-ಪಿ.ಆರ್.
ए. सरवण बाबु, प्रबंधक/सी.ई.-एम.एम.-पी.आर.
A. SARAVANA BABU, MANAGER/CE-MM-PR
BHEL-EDN, MYSURU ROAD, BENGALURU-560026

Section 5 - Previous Transgression

5.1 The Bidder declares that no previous transgressions occurred in the last 3 (three) years with any other company in any country conforming to the anti-corruption approach or with any other Public Sector Enterprise in India that could justify his exclusion from the tender process.

5.2 If the Bidder makes incorrect statement on this subject, he can be disqualified from the tender process or the contract, if already awarded, can be terminated for such reason or action can be taken as per the separate "Guidelines on Banning of Business dealings with Suppliers/ Contractors", framed by the Principal.

Section 6 - Equal treatment of all Bidder (s)/ Contractor (s) / Sub-contractor (s)

6.1 The Principal will enter into Integrity Pacts with identical conditions as this Integrity Pact with all Bidders and Contractors.

6.2 In case of Sub-contracting, the Principal Contractor shall take the responsibility of the adoption of Integrity Pact by the Sub-contractor(s) and ensure that all Sub-contractors also sign the Integrity Pact.

6.3 The Principal will disqualify from the tender process all Bidders who do not sign this Integrity Pact or violate its provisions.

Section 7 - Criminal Charges against violating Bidders/ Contractors /Subcontractors

If the Principal obtains knowledge of conduct of a Bidder, Contractor or Subcontractor, or of an employee or a representative or an associate of a Bidder, Contractor or Subcontractor which constitutes corruption, or if the Principal has substantive suspicion in this regard, the Principal will inform the Vigilance Office.

Section 8 -Independent External Monitor(s)

8.1 The Principal appoints competent and credible panel of Independent External Monitor (s) (IEMs) for this Integrity Pact. The task of the IEMs is to review independently and objectively, whether and to what extent the parties comply with the obligations under this Integrity Pact.

8.2 The IEMs are not subject to instructions by the representatives of the parties and performs his functions neutrally and independently. He reports to the CMD, BHEL.

8.3 The IEMs shall be provided access to all documents/ records pertaining to the Contract, for which a complaint or issue is raised before them as and when warranted. However, the documents/records/information having National Security implications and those documents which have been classified as Secret/Top Secret are not to be disclosed.

8.4 The Principal will provide to the IEMs sufficient information about all meetings among the parties related to the Contract provided such meetings could have an impact on the contractual relations between the Principal and the Contractor. The parties offer to the IEMs the option to participate in such meetings.

ಎ. ಸರವಣ ಬಾಬು, ವ್ಯವಸ್ಥಾಪಕರು/ಸಿ.ಇ.-ಎಂ.ಎಂ.-ಪಿ.ಆರ್.
ए. सरवण बाबु, प्रबंधक/सी.ई.-एम.एम.-पी.आर.
A. SARAVANA BABU, MANAGER/CE-MM-PR
BHEL-EDN, MYSURU ROAD, BENGALURU-560026

8.5 The advisory role of IEMs is envisaged as that of a friend, philosopher and guide. The advice of IEMs would not be legally binding and it is restricted to resolving issues raised by a Bidder regarding any aspect of the tender which allegedly restricts competition or bias towards some Bidders. At the same time, it must be understood that IEMs are not consultants to the Management. Their role is independent in nature and the advice once tendered would not be subject to review at the request of the organization.

8.6 For ensuring the desired transparency and objectivity in dealing with the complaints arising out of any tendering process or during execution of Contract, the matter should be examined by the full panel of IEMs jointly, who would look into the records, conduct an investigation, and submit their joint recommendations to the Management.

8.7 The IEMs would examine all complaints received by them and give their recommendations/ views to the CMD, BHEL at the earliest. They may also send their report directly to the CVO, in case of suspicion of serious irregularities requiring legal/ administrative action. Only in case of very serious issue having a specific, verifiable Vigilance angle, the matter should be reported directly to the Commission. IEMs will tender their advice on the complaints within 30 days.

8.8 The CMD, BHEL shall decide the compensation to be paid to the IEMs and its terms and conditions.

8.9 IEMs should examine the process integrity, they are not expected to concern themselves with fixing of responsibility of officers. Complaints alleging mala fide on the part of any officer of the Prinicpal should be looked into by the CVO of the Principal.

8.10 If the IEMs have reported to the CMD, BHEL, a substantiated suspicion of an offence under relevant Indian Penal Code / Prevention of Corruption Act, and the CMD, BHEL has not, within reasonable time, taken visible action to proceed against such offence or reported it to the Vigilance Office, the IEMs may also transmit this information directly to the Central Vigilance Commissioner, Government of India.

8.11 After award of work, the IEMs shall look into any issue relating to execution of Contract, if specifically raised before them. As an illustrative example, if a Contractor who has been awarded the Contract, during the execution of Contract, raises issue of delayed payment etc. before the IEMs, the same shall be examined by the panel of IEMs. Issues like warranty/ guarantee etc. shall be outside the purview of IEMs.

8.12 However, the IEMs may suggest systemic improvements to the management of the Principal, if considered necessary, to bring about transparency, equity and fairness in the system of procurement.

8.13 The word `Monitor' would include both singular and plural.

Section 9 - Pact Duration

9.1 This Integrity Pact shall be operative from the date this Integrity Pact is signed by both the parties till the final completion of contract for successful Bidder, and for all other Bidders 6 months after the Contract has been awarded. Any violation of the same would entail disqualification of the bidders and exclusion from future business dealings.

9.2 If any claim is made/ lodged during currency of this Integrity Pact, the same shall be binding and continue to be valid despite the lapse of this Pact as specified above, unless it is discharged/ determined by the CMD, BHEL.

ಎ. ಸರವಣ ಬಾಬು, ವ್ಯವಸ್ಥಾಪಕರು/ನಿ.ಆ.-ಎಂ.ಎಂ.-ಪಿ.ಆರ್.
ए. सरवण बाबु, प्रबंधक/सी.ई.-एम.एम.-पी.आर.
A. SARAVANA BABU, MANAGER/CE-MM-PR
BHEL-EDN, MYSURU ROAD, BENGALURU-560026

Section 10 - Other Provisions

10.1 This Integrity Pact is subject to Indian Laws and exclusive jurisdiction shall be of the competent Courts as indicated in the Tender or Contract, as the case may be.

10.2 Changes and supplements as well as termination notices need to be made in writing.

10.3 If the Bidder(s)/ Contractor(s) is a partnership or a consortium or a joint venture, this Integrity Pact shall be signed by all partners of the partnership or joint venture or all consortium members.

10.4 Should one or several provisions of this Integrity Pact turn out to be invalid, the remainder of this Integrity Pact remains valid. In this case, the parties will strive to come to an agreement to their original intentions.

10.5 Only those bidders / contractors who have entered into this Integrity Pact with the Principal would be competent to participate in the bidding. In other words, entering into this Integrity Pact would be a preliminary qualification.

10.6 In the event of any dispute between the Principal and Bidder(s)/ Contractor(s) relating to the Contract, in case, both the parties are agreeable, they may try to settle dispute through Mediation before the panel of IEMs in a time bound manner. In case, the dispute remains unresolved even after mediation by the panel of IEMs, either party may take further action as the terms & conditions of the Contract. The fees/expenses on dispute resolution through mediation shall be shared by both the parties. Further, the mediation proceedings shall be confidential in nature and the parties shall keep confidential all matters relating to the mediation proceedings including any settlement agreement arrived at between the parties as outcome of mediation. Any views expressed, suggestions, admissions or proposals etc. made by either party in the course of mediation shall not be relied upon or introduced as evidence in any further arbitral or judicial proceedings, whether or not such proceedings relate to the dispute that is the subject of mediation proceedings. Neither of the parties shall present IEMs as witness in any Alternative Dispute Resolution or judicial proceedings in respect of the dispute that was subject of mediation.

For & On behalf of the Principal (Office Seal) ಎ. ಸರವಣ ಬಾಬು, ವ್ಯವಸ್ಥಾಪಕರು/ನಿ ಲು.-ಎಂ.ಎಂ.-ಪಿ.ಆರ್. Place ए. सरवण बाबु, प्रबंधक/सी.ई.-एम.एम.-पी.आर. Date A. SARAVANA BABU, MANAGER/CE-MM-PR BHEL-EDN, MYSURU ROAD, BENGALURU-560026	For & On behalf of the Bidder/ Contractor (Office Seal)
Witness: (Name & Address) MOUNISH.G BHEL - EDN, Bangalore-26.	Witness: (Name & Address)

Annexure-X

Restrictions under Rule 144(xi) of General Financial Rules, 2017 amendment dt: 23.07.2020

I. Any bidder from a country which shares a land border with India will be eligible to bid in this tender only if the bidder is registered with the Competent Authority.

II. "Bidder" (including the term 'tenderer', 'consultant' or 'service provider' in certain contexts) means any person or firm or company, including any member of a consortium or joint venture (that is an association of several persons, or firms or companies), every artificial juridical person not falling in any of the descriptions of bidders stated hereinbefore, including any agency branch or office controlled by such person, participating in a procurement process.

III. "Bidder from a country which shares a land border with India" for the purpose of this Order means :-

a. An entity incorporated, established or registered in such a country; or

b. A subsidiary of an entity incorporated, established or registered in such a country; or

c. An entity substantially controlled through entities incorporated, established or registered in such a country; or

d. An entity whose *beneficial owner* is situated in such a country; or

e. An Indian (or other) agent of such an entity; or

f. A natural person who is a citizen of such a country; or

g. A consortium or joint venture where any member of the consortium or joint venture falls under any of the above

IV. The *beneficial owner* for the purpose of (iii) above will be as under:

1. In case of a company or Limited Liability Partnership, the beneficial owner is the natural person(s), who, whether acting alone or together, or through one or more juridical person, has a controlling ownership interest or who exercises control through other means.

Explanation--

a. "Controlling ownership interest" means ownership of or entitlement to more than twenty-five per cent of shares or capital or profits of the company;

b. "Control" shall include the right to appoint majority of the directors or to control the management or policy decisions including by virtue of their shareholding or management rights or shareholders agreements or voting agreements;

2. In case of a partnership firm, the beneficial owner is the natural person(s) who, whether acting alone or together, or through one or more juridical person, has ownership of entitlement to more than fifteen percent of capital or profits of the partnership;

3. In case of an unincorporated association or body of individuals, the beneficial owner is the natural person(s), who, whether acting alone or together, or through one or more juridical person, has ownership of or entitlement to more than fifteen percent of the property or capital or profits of such association or body of individuals;

4. Where no natural person is identified under (1) or (2) or (3) above, the beneficial owner is the relevant natural person who holds the position of senior managing official;

5. In case of a trust, the identification of beneficial owner(s) shall include identification of the author of the trust, the trustee, the beneficiaries with fifteen percent or more interest in the trust and any other natural person exercising ultimate effective control over the trust through a chain of control or ownership.

V. An Agent is a person employed to do any act for another, or to represent another in dealings with third person.

A4-10		REF.: CE / 416 /SAGA/LIE/LIR/ PS
		REV. NO.: 00
		PAGE: 01 0F 02

COPYRIGHT AND CONFIDENTIAL
THE INFORMATION ON THIS DOCUMENT IS THE PROPERTY OF BHARAT HEAVY ELECTRICALS LIMITED . IT MUST NOT BE USED DIRECTLY OR INDIRECTLY IN ANY WAY DETRIMENTAL TO THE INTEREST OF THE COMPANY.

PROJECT: SAGARDIGHI 1 X 660MW STPP UNIT #5 EXTENSION

CUSTOMER: M/s WBPDCL

CONSULTANT: M/s DCPL

PUCHASE SPECIFICATION
FOR
LOCAL INSTRUMENTS ENCLOSURES AND LOCAL INSTRUMENT RACKS (LIE/LIR)

REVISION : 00	APPROVED BY DIPTENDU GHOSH		
	PREPARED BY RAJESH LINGUTLA	ISSUED 416	DATE 9-Oct-23

COPYRIGHT AND CONFIDENTIAL
THE INFORMATION ON THIS DOCUMENT IS THE PROPERTY OF BHARAT HEAVY ELECTRICALS LIMITED . IT MUST NOT BE USED DIRECTLY OR INDIRECTLY IN ANY WAY DETRIMENTAL TO THE INTEREST OF THE COMPANY.

CONTENTS

SECTION	DESCRIPTION	REFERENCE NO.	NO OF SHEETS
A	GENERAL INSTRUCTIONS TO BIDDERS	CE/416/LIE/LIR/GI	3
B	PRE-QUALIFICATION REQUIREMENTS	CE/416/LIE/LIR/PQR	2
C	TECHNICAL SPECIFICATION FOR LIE/LIR	CE/416/SAGA/LIE/LIR /TS	66

GENERAL INSTRUCTIONS TO BIDDERS

COPYRIGHT AND CONFIDENTIAL

THE INFORMATION ON THIS DOCUMENT IS THE PROPERTY OF BHARAT HEAVY ELECTRICALS LIMITED . IT MUST NOT BE USED DIRECTLY OR INDIRECTLY IN ANY WAY DETRIMENTAL TO THE INTEREST OF THE COMPANY.

SECTION- A

GENERAL INSTRUCTIONS TO BIDDERS:

1.0 All required documents against this Tender/Specification shall be submitted in English only.

2.0 Introduction: Bidders are required to offer Local Instrument Enclosure and Local Instrument Rack (LIE/LIR) for a Coal Fired Thermal Power Plant Applications.

3.0 In order to accept the Technical offers / proposals from Bidders for the project mentioned in this Specification (refer Section C), certain Pre-qualification criteria are required to be met by Bidder.

4.0 Pre-qualification requirements are clearly mentioned in Section-B of this Specification. Bidder to read the same carefully and submit the details required for BHEL's acceptance.

5.0 Submit duly-filled Supplier Registration Form (SRF), which shall be downloaded by Bidder from our website "www.bhel.com.This is required for registration of new vendors at BHEL EDN against item Local Instrument Enclosure (LIE) & Local Instrument Rack (LIR). Those Vendors who are already approved by BHEL EDN against item Local instrument Enclosure (LIE) & Local instrument Rack (LIR) are not required to submit the Supplier Registration Form (SRF).

6.0 BHEL May visit vendor's work for verification of facilities offered and BHEL decision on suitability of manufacturing facility is final and binding.

7.0 In case Bidder does not include the details or meet the requirements of Pre-qualification requirements, their offer will be summarily rejected and Bidder's Technical offers will not be evaluated.

Evaluation methodology:

Evaluation methodology as below
BHEL shall initially open Bidder's PQR documents as per Section-B of this specification for review & acceptance.
If the Bidders who are meeting PQR requirements as per Section-B of this specification, Technical Offers of those bidders only will be considered for evaluation.
If the Bidders who are meeting technical requirements as per Section C of this specification, Those Bidders will be taken up with End user/Customer for approval.

If the Bidders who are approved by End user/Customer, Commercial bids of those bidders will be considered for further evaluation by BHEL.

8.0 Bidders are required to submit offers as detailed below :

aa. Documents pertaining to Pre-Qualification requirement (Section B of this Specification) shall be in a Separate cover /Soft Folder with reference no. "CE/416/LIE-LIR/PQR / Section B" marked on it.

bb. Technical offers/proposals for the Project, whose requirements are mentioned in Sections C will be submitted in a separate cover/Soft Folder with RFQ Reference & Reference marked on it.

Note 1: -Whenever required during evaluation of PQR and Technical offers/bids, vendor is required to be present at BHEL Electronic Division, Bangalore, for discussions. Further in the event of order, during approval of the vendor documents by End users/Customers, if needed vendor shall accompany BHEL representative for discussions.

Note 2: - Changes in Technical Specifications will be discussed with the bidders who Qualified PQR for this tender.

Note 3: - BHEL shall submit vendor credentials to customer and await customer's decision for a maximum of one month from the date of PQ bid opening. If approval is not received within above period, BHEL shall treat the offer as "NOT Meeting PQ" criteria and offer shall be rejected.

PRE-QUALIFICATIONS REQUIREMENTS

COPYRIGHT AND CONFIDENTIAL

THE INFORMATION ON THIS DOCUMENT IS THE PROPERTY OF BHARAT HEAVY ELECTRICALS LIMITED . IT MUST NOT BE USED DIRECTLY OR INDIRECTLY IN ANY WAY DETRIMENTAL TO THE INTEREST OF THE COMPANY.

APPROVED BY		
DIPTENDU GHOSH		
PREPARED BY	ISSUED	DATE
RAJESH LINGUTLA	416	9-Oct-23

SECTION- B

Pre-Qualification Requirements (PQR) of Bidders for Local Instrument Rack (LIR), as a part of Offer:

1.0 Submit Reference List of Projects, Unpriced Purchase Order Copies, wherein LIE, LIR has been supplied.

2.0 The bidder should have executed/ completed work of Design and supply of complete LIE LIR package at least 2 units of 500MW or above rating Thermal power plant. Bidder should have executed Complete LIE/LIR Package to accommodate minimum of 60 Pressure transmitters / switches. Unpriced PO Copy and Customer approved data sheet or Dispatch documents or inspection report etc shall be provided.

3.0 Bidders shall have experienced welders for welding of materials specified in the Technical specification. Welder's certificate shall be provided for verification.

4.0 Bidders shall have a designated drawing office with AUTOCAD/other drafting software, Submission of drawings shall be in pdf format. Bidders to give compliance to the same.

5.0 Bidders shall have designated machine shop including sheet metal fabrication upto 4mm thick and cutting up to 10 mm thick plates, should have Painting facility for both epoxy based tank process painting and powder coating facility or if outsourced details to be provided.

6.0 Bidder shall have facility for performing hydro test on all individual lines (Hydro test pressure shall be 530Kg/Cm2). Bidders to give compliance to the same.

7.0 Vendor shall have requisite space for physical inspection, loading facility etc for offering minimum of about 80 LIRs at the same time for inspection. Bidders to give compliance to the same.

Important Note: In case Bidder does not submit details mentioned in above Section (B) offers will be summarily rejected and Bidder's Technical offers/proposals will not be evaluated. Please read carefully the GENERAL INSTRUCTIONS in Section A of this specifications.

COPY RIGHT AND CONFIDENTIAL

THE INFORMATION ON THIS DOCUMENT IS THE PROPERTY OF BHARAT HEAVY ELECTRICALS LIMITED. IT MUST NOT BE USED DIRECTLY OR INDIRECTLY IN ANY WAY DETRIMENTAL TO THE INTEREST OF THE COMPANY.

PROJECT: SAGARADIGHI 1 X 660MW STPP UNIT#5 EXTENSION

CUSTOMER: M/s WBPDCL

CONSULTANT: M/s DCPL

TECHNICAL SPECIFICATION
FOR
LOCAL INSTRUMENT ENCLOSURE / RACKS
(LIE / LIR)

REVISIONS :	APPROVED BY		
	DIPTENDU GHOSH		
	PREPARED BY	ISSUED	DATE
	RAJESH LINGUTLA	416	09/10/23

CONTENTS

SL NO	DESCRIPTION	REFERENCE NO
01	SCOPE OF SUPPLY	CE/416/SAGA/LIE-LIR/SOS REV. 00 ,SHEETS 05
02	TECHNICAL REQUIREMENTS	CE/416/LIE-LIR /TR REV. 00, SHEETS 07
03	INSTRUMENT SCHEDULE	CE/416/SAGA/INS REV. 00 ,SHEETS 12
04	HOOKUP SCHEMES	CE/416/SAGA/HUP REV. 00 ,SHEETS 27
05	VENDOR LIST FOR COMPONENTS	CE/416/SAGA/LIE-LIR /VL REV. 00, SHEETS 03
06	DRAWINGS FOR LIE-LIR	CE/416/LIE/LIR/OGA1 SHEETS 04
07	TYPICAL QUALITY CHECK LIST	CE/416/LIE-LIR/QP REV.00, SHEETS 06

COPY RIGHT AND CONFIDENTIAL

THE INFORMATION ON THIS DOCUMENT IS THE PROPERTY OF BHARAT HEAVY ELECTRICALS LIMITED . IT MUST NOT BE USED DIRECTLY OR INDIRECTLY IN ANY WAY DETRIMENTAL TO THE INTEREST OF THE COMPANY.

PROJECT: SAGARADIGHI 1 X 660MW STPP UNIT#5 EXTENSION

CUSTOMER: M/s WBPDCL

CONSULTANT: M/s DCPL

COPY RIGHT AND CONFIDENTIAL

THE INFORMATION ON THIS DOCUMENT IS THE PROPERTY OF BHARAT HEAVY ELECTRICALS LIMITED. IT MUST NOT BE USED DIRECTLY OR INDIRECTLY IN ANY WAY DETRIMENTAL TO THE INTEREST OF THE COMPANY.

SCOPE OF SUPPLY
FOR
LOCAL INSTRUMENT ENCLOSURE / RACKS
(LIE / LIR)

REVISIONS :	APPROVED BY		
	DIPTENDU GHOSH		
	PREPARED BY	ISSUED	DATE
	RAJESH LINGUTLA	416	09/10/23

COPY RIGHT AND CONFIDENTIAL

THE INFORMATION ON THIS DOCUMENT IS THE PROPERTY OF BHARAT HEAVY ELECTRICALS LIMITED . IT MUST NOT BE USED DIRECTLY OR INDIRECTLY IN ANY WAY DETRIMENTAL TO THE INTEREST OF THE COMPANY.

Scope of supply

The Scope of supply is as per Technical requirements attached with this specification. Vendor shall quote for each line item of the Table A, B & C The unit rate shall be valid until the completion of the contracts. For this purpose, vendors shall maintain MS Excel file indicating total Bill of materials and Hardware for Loose schemes.

TABLE: A

S.NO	HUP Ref CE/416/SAGA /HUP	Material Code	Description	Quantity	Unit
1		PR0830000020	LIE TYPEA	25	NO
2		PR0830000038	LIE TYPE B	48	NO
3		PR0830000046	LIE TYPE C	17	NO
4		PR0830000054	LIR TYPE A	30	NO
5		PR0830000062	LIR TYPE B	25	NO
6		PR0830000070	LIR TYPE C	12	NO
7	2	PR0830000313	HOOK UP SCHEME PT/PS 1/2" P91 9000CL	26	NO
8	4	PR0830000321	HOOK UP SCHEME DPT/DPS 1/2" P91 9000CL	9	NO
9	6	PR0830000402	HOOK UP SCHEME PT/PS 1/2" P22 6000CL	16	NO
10	8	PR0830000356	HOOK UP SCHEME DPT/DPS 1/2" P22 6000CL	18	NO
11	10	PR0830000100	Hook up PT/PS 6000 Steam and Water	23	NO
12	12	PR0830000119	HOOK UP DPT/FT/LT STEAM AND WATER A106 6K	26	NO
13	14	PR0830000127	Hook up PT/PS 3000 water	159	NO
14	16	PR0830000135	Hook up DPT/DPS 3000 water	107	NO
15	18	PR0900001829	HOOK UP PT/PS 3000 DM WATER SS316 PIPES	60	NO
16	20	PR0900001879	HOOK UP SCHEME DPT/ FT 3000 CLASS SS316	10	NO
17	22	PR0830000143	Hook up PT/PS Clean Air service	66	NO
18	24	PR0830000194	Hook up DPT/FT/DPS Flue gas	103	NO
19	26	PR0830000003	Hook up for Air Purging	47	NO
20	26	PR0830000259	Hook up for Continuous Purging	232	NO
21	26	PR0830000267	Hook up for Intermittent Purging	47	NO
22		PR0900007443	Hardware for Loose Schemes as per Table-B	1	ST
23		PR0830000275	Mandatory Spares for LIE/LIR as per Table-C	1	ST

Note:

1. **Colour Exterior –RAL7032**
2. **Interior: Brilliant white Glossy finish two coats/RAL7035 with fire resistant paint. Paint thickness shall be 80 to 100 microns. Final color will be decided during detailed engineering.**
3. **IP-65 Type test shall be conducted for LIE and JB of LIR for the above project and to submitted for approval during document submission.**
4. **Please refer/correlate scope of supply w.r.t Technical specifications, Instruments schedule, Hook Up schemes and Drawings etc.**

COPY RIGHT AND CONFIDENTIAL

THE INFORMATION ON THIS DOCUMENT IS THE PROPERTY OF BHARAT HEAVY ELECTRICALS LIMITED . IT MUST NOT BE USED DIRECTLY OR INDIRECTLY IN ANY WAY DETRIMENTAL TO THE INTEREST OF THE COMPANY.

TABLE B **Hardware for Loose Schemes**

SL. NO.	ITEM DESCRIPTION	QTY
1	Bulk Head Union Material:Brass Size:1/4"NPTF	35 Nos
2	Copper Tube in Coils-light brown Tempered:PVC Coated As per ASTM B 75 /: 1/4" OD X 1 MM Thick	100 Meters
3	Brass Male Connector DFDC Size:1/4" to suit 1/4" Copper tube	100 Nos
4	NIPPLE MAT: ASTM A106 Gr.B SIZE: 1/2" NB SCH 80 / LENGTH = 100 mm ONE END - 1/2" NTPM ,OTHER END : PLAIN CAP/ ASTM A 105 -SIZE - 1/2" NPTF	5 Nos
5	Nut & Tail Fitting + SS 304 Washers (2 NOS.) Mat:ASTM A 182 F22 Size:ID= 9 mm / OD=19 mm Nut:3/4" BSPF	25 Nos
6	Adapter +SS Washers Mat: ASTM A182 F91 Size:1/2 NPTMX 3/4 " BSPM CL 6000	25 Nos
7	SYPHON MAT: ASTM A106 Gr.B 1/2" NB SCH 80 CONNECTION: 1/2" NB-SW /PR.TESTING: 3000 PSI	12 Nos
8	SYPHON MAT: ASTM A106 Gr.B 1/2" NB SCH 160 CONNECTION: 1/2" NB-SW /PR.TESTING: 6000 PSI	5 Nos
9	SYPHON RATING 9000PSI MATL: A335 P91 SIZE:1/2" NB-SCHXXS CONNECTING :1/2"NB-SW	8 Nos

Unit rate of each item for Hardware for Loose schemes to be provided in the offer. Same Unit rates will be used for addition/deletion during detailed engineering & PO Amendment.

COPY RIGHT AND CONFIDENTIAL

THE INFORMATION ON THIS DOCUMENT IS THE PROPERTY OF BHARAT HEAVY ELECTRICALS LIMITED . IT MUST NOT BE USED DIRECTLY OR INDIRECTLY IN ANY WAY DETRIMENTAL TO THE INTEREST OF THE COMPANY.

TABLE C 1/2 **MANDATORY SPARE**

SL. NO.	ITEM DESCRIPTION	UNIT	Spare QTY
1	**TRANSMITTER VALVE MANIFOLD (10% OR MINIMUM 4 NOS)**		
1.1	TWO VALVE MANIFOLD WITH VENT PLUG PORT SIZE:1/2" NPTF/MATL.SS316, BAR STOCK, PR.TESTING:9000 PSI	NO	4.00
1.2	TWO VALVE MANIFOLD WITH VENT PLUG PORT SIZE:1/2" NPTF/MATL.SS316, BAR STOCK, PR.TESTING:6000 PSI	NO	4.00
1.3	TWO VALVE MANIFOLD WITH VENT PLUG PORT SIZE:1/2" NPTF/MATL.SS316, BAR STOCK, PR.TESTING:3000 PSI	NO	29.00
1.4	FIVE VALVE MANIFOLD WITH VENT PLUG PORT SIZE:1/2" NPTF/MATL.SS316, BAR STOCK, PR.TESTING:9000 PSI	NO	4.00
1.5	FIVE VALVE MANIFOLD WITH VENT PLUG PORT SIZE:1/2" NPTF/MATL.SS316, BAR STOCK, PR.TESTING:6000 PSI	NO	4.00
1.6	FIVE VALVE MANIFOLD WITH VENT PLUG PORT SIZE:1/2" NPTF/MATL.SS316, BAR STOCK, PR.TESTING:3000 PSI	NO	12.00
1.7	THREE VALVE MANIFOLD WITH VENT PLUG PORT SIZE:1/2"NPTF MATL:SS316, BAR STOCK, PR.TESTING:1500PSI	NO	11.00
2	**IMPULSE LINE ISOLATION VALVE (10% OR MINIMUM 4 NOS)**		
2.1	FORGED GLOBE VALVE MATL.BODY:ASTM -A182 F91/ STEM MATL:ASTM-A182 F6A SIZE:1/2"NB-SW/CL 3000SPL	NO	5.00
2.2	FORGED GLOBE VALVE MATL.BODY:ASTM -A182 F22/ STEM MATL:ASTM-A182 F6A SIZE:1/2"NB-SW/CL 3000SPL	NO	6.00
2.3	FORGED GLOBE VALVE BODY:ASTM A105/STEM:ASTM A182 GR.F6A SIZE:1/2"NB-SW/CL:2500	NO	8.00
2.4	FORGED GLOBE VALVE BODY:ASTM A105/STEM:ASTM A182 GR.F6A SIZE:1/2"NB-SW/CL:800	NO	38.00
2.5	FORGED GLOBE VALVE BODY:ASTM A182F316/STEM:ASTM A182 GR.F6A SIZE:1/2"NB-SW/CL:800	NO	8.00
2.6	FOUR WAY VALVE SIZE :-2x3/4"NB SW x 2x1/2" NPTF MATL: A105, CL :800	NO	28.00
3	**IMPULSE LINE DRAIN VALVE (10% OR MINIMUM 4 NOS)**		
3.1	FORGED GLOBE VALVE MATL.BODY:ASTM -A182 F91/ STEM MATL:ASTM-A182 F6A SIZE:1/2"NB-SW/CL 3000SPL	NO	9.00
3.2	FORGED GLOBE VALVE MATL.BODY:ASTM -A182 F22/ STEM MATL:ASTM-A182 F6A SIZE:1/2"NB-SW/CL 3000SPL	NO	11.00
3.3	FORGED GLOBE VALVE BODY:ASTM A105/STEM:ASTM A182 GR.F6A SIZE:1/2"NB-SW/CL:2500	NO	15.00
3.4	FORGED GLOBE VALVE BODY:ASTM A105/STEM:ASTM A182 GR.F6A SIZE:1/2"NB-SW/CL:800	NO	75.00
3.5	FORGED GLOBE VALVE BODY:ASTM A182F316/STEM:ASTM A182 GR.F6A SIZE:1/2"NB-SW/CL:800	NO	16.00
4	**IMPULSE LINE FITTINGS (EACH TYPE/SIZE 25 NOS)**		
4.1.1	FORGED REDUCER / AS PER ANSI B16.11/MATERIAL: ASTM A182 F91/SIZE: OD OF 1" NB TO 1/2" NB-SW / CLASS-9000LBs/LENGTH = 100mm	NO	25.00
4.1.2	FORGED REDUCER / AS PER ANSI B16.11/MATERIAL: ASTM A182 F22/SIZE: OD OF 1" NB TO 1/2" NB-SW / CLASS-6000 LBS/LENGTH = 100mm	NO	25.00
4.1.3	FORGED REDUCER / AS PER ANSI B16.11/MATERIAL: ASTM A105/SIZE: OD OF 1" NB TO 1/2" NB-SW / CLASS-6000 LBS LENGTH = 100mm	NO	25.00
4.1.4	FORGED REDUCER / AS PER ANSI B16.11/MATERIAL: ASTM A105/SIZE: OD OF 1" NB x 1/2" NB-SW / CLASS-3000/ LENGTH = 100mm	NO	25.00
4.1.5	FORGED EXPANDER / AS PER ANSI B16.11/MATERIAL: ASTMA A105/SIZE: OD OF 22MM(+0.3) TO 3/4"NB-SW /CLASS-3000/LENGTH = 100mm	NO	25.00
4.1.6	FORGED EXPANDER / AS PER ANSI B 16.11/MATERIAL: ASTM A105/SIZE: 1/2"NB-SW x 3/4" NB-SW / CLASS-3000 LBS	NO	25.00
4.1.7	FORGED REDUCER / AS PER ANSI B 16.11/MATERIAL: ASTM A105/SIZE: 1"NB-SW x 3/4" NB-SW / CLASS-3000 LBS	NO	25.00
4.1.8	FORGED REDUCER/ AS PER ANSI B16.11/MATERIAL: ASTM A105/SIZE: 1" BSPF x 3/4" NB-SW / CLASS-3000 LBS	NO	25.00

Unit rate of each item for Mandatory spare to be provided in the offer. Same Unit rates will be used for addition/deletion during detailed engineering & PO Amendment.

COPY RIGHT AND CONFIDENTIAL

THE INFORMATION ON THIS DOCUMENT IS THE PROPERTY OF BHARAT HEAVY ELECTRICALS LIMITED . IT MUST NOT BE USED DIRECTLY OR INDIRECTLY IN ANY WAY DETRIMENTAL TO THE INTEREST OF THE COMPANY.

TABLE C 2/2 MANDATORY SPARE

SL. NO.	ITEM DESCRIPTION	UNIT	Spare QTY
4.1.9	FORGED UNEQUAL TEE / AS PER ANSI B16.11/MATERIAL: ASTM A105/SIZE: 2 x 3/4" NB-SW x 1/2" NPTF / CLASS-3000 LBS	NO	25.00
4.1.10	FORGED EQUAL TEE / AS PER ANSI B16.11/MATERIAL: ASTM A105/SIZE: 3/4" NB-SW / CLASS-3000 LBS	NO	25.00
4.1.11	FORGED REDUCER / AS PER ANSI B16.11/MATERIALERIAL: ASTM A182 F316H/SIZE: OD of 25mm NB Pipe to 15mm NB SW / CLASS-6000	NO	25.00
4.1.12	FORGED ELBOW / AS PER ANSI B16.11/MATERIAL: ASTM A182 F316H/SIZE: 1/2" NB-SW / CLASS-6000	NO	25.00
4.1.13	FORGED COUPLING / AS PER ANSI B16.11/MATERIAL: ASTM A182 F91/SIZE: 1/2" NB-SW / CLASS-9000	NO	25.00
4.1.14	FORGED COUPLING / AS PER ANSI B16.11/MATERIAL: ASTM A182 F22/SIZE: 1/2" NB-SW / CLASS-6000	NO	25.00
4.1.15	FORGED COUPLING / AS PER ANSI B16.11/MATERIAL: ASTM A105/SIZE: 1/2" NB-SW / CLASS-6000	NO	25.00
4.1.16	FORGED COUPLING / AS PER ANSI B16.11/MATERIAL: ASTM A105/SIZE: 1/2" NB-SW / CLASS-3000	NO	25.00
4.1.17	FORGED COUPLING / AS PER ANSI B16.11/MATERIAL: ASTM A105/SIZE: 3/4" NB-SW / CLASS-3000	NO	25.00
4.1.18	FORGED COUPLING / AS PER ANSI B 16.11/MATERIAL: ASTM A182 F316H/SIZE: 1/2" NB-SW / CLASS-6000	NO	25.00
4.1.19	FORGED COUPLING / AS PER ANSI B16.11/MATERIAL: A182 F316/SIZE: 1/2" NB-SW / CLASS-3000	NO	25.00
4.1.20	FORGED UNEQUAL TEE / AS PER ANSI B16.11/MATL:ASTM A182 F91/ SIZE:2 X 1/2" NB-SW TO 1/2"NPTF / CL:9000LBS	NO	25.00
4.1.21	FORGED UNEQUAL TEE / AS PER ANSI B16.11/MATL:ASTM A182 F22/ SIZE:2 X 1/2" NB-SW TO 1/2"NPTF / CL:6000LBS	NO	25.00
4.1.22	FORGED UNEQUAL TEE / AS PER ANSI B16.11/MATL:ASTM A105/ SIZE:2 X 1/2" NB-SW TO 1/2"NPTF / CL:6000LBS	NO	25.00
4.1.23	FORGED UNEQUAL TEE / AS PER ANSI B16.11/MATL:ASTM A182F316/SIZE:2 X 1/2" NB-SW TO 1/2"NPTF / CL:3000LBS	NO	25.00
4.1.24	FORGED UNEQUAL TEE / AS PER ANSI B16.11/MATL:ASTM A105/ SIZE:2 X 3/4" NB-SW TO 1/2"NPTF / CL:3000LBS	NO	25.00
4.1.25	NIPPLE SIZE:3/4"NB-SCH-80 MATL:ASTM A106 GR C CONN:ONE END PLAIN X OTHER END 3/4"NPTM, 200mm LONG	NO	25.00
4.1.26	CAP SIZE:3/4"NPTF MATL:ASTM A105	NO	25.00
5	**IMPULSE PIPES (EACH TYPE/SIZE 100 METERS)**		
5.1	IMPULSE PIPE MATL: ASTM A335 P91 SIZE: 1/2" NB SCH XXS	M	100.00
5.2	IMPULSE PIPE MATL: ASTM A335 P22 SIZE: 1/2" NB SCH160	M	100.00
5.3	IMPULSE PIPE MATL: ASTM A106 Gr C SIZE: 1/2" NB SCH 160	M	100.00
5.4	IMPULSE PIPE MATL:ASTM A106 Gr C SIZE: 1/2" NB SCH 80	M	100.00
5.5	IMPULSE PIPE MATL: ASTM A106 Gr C SIZE: 3/4" NB SCH 80	M	100.00
5.6	IMPULSE PIPE MATL: ASTM A312 TP316 SIZE: 1/2" NB SCH 40	M	100.00
5.7	IMPULSE PIPE MATL: ASTM A312 TP316H SIZE:1/2" NB SCH 160	M	100.00
6	**SS TUBE (EACH TYPE/SIZE 100 METERS)**		
6.1	SEAMLESS TUBE MATL:A213 TP316 SIZE:1/2"OD X 2.1MM THICK	M	100.00
6.2	SEAMLESS TUBE MATL:A213 TP316H SIZE:1/2"OD X 1.1MM THICK	M	100.00
7	**SS TUBE FITTINGS (EACH TYPE/SIZE 100 NOS)**		
7.1	TUBE FITTING TYPE:DFDC MATL:SS316 SIZE:1/2"NPTM X TO SUIT 1/2"OD SS TUBE	NO	100.00
7.2	QUICK DISCCONNECTING FITTING SIZE: 1/2" NPTM X TO SUIT WITH FEMALE COUPLER MATL:SS-304	NO	100.00

Unit rate of each item for Mandatory spare to be provided in the offer. Same Unit rates will be used for addition/deletion during detailed engineering & PO Amendment.

PROJECT: SAGARADIGHI 1 X 660MW STPP UNIT#5 EXTENSION

CUSTOMER: M/s WBPDCL

CONSULTANT: M/s DCPL

COPY RIGHT AND CONFIDENTIAL

THE INFORMATION ON THIS DOCUMENT IS THE PROPERTY OF BHARAT HEAVY ELECTRICALS LIMITED. IT MUST NOT BE USED DIRECTLY OR INDIRECTLY IN ANY WAY DETRIMENTAL TO THE INTEREST OF THE COMPANY.

TECHNICAL REQUIREMENT
FOR
LOCAL INSTRUMENT ENCLOSURE / RACKS
(LIE / LIR)

REVISIONS :	APPROVED BY		
	DIPTENDU GHOSH		
	PREPARED BY	ISSUED	DATE
	RAJESH LINGUTLA	416	09/10/23

TECHNICAL REQUIREMENTS FOR TRANSMITTER ENCLOSURES AND TRANSMITTER RACKS:

I. TRANSMITTER ENCLOSURES:

1. The Transmitter enclosures (Closed type) are provided for mounting Transmitters etc. and located in Boiler area. This shall be constructed of 3 mm thick CRCA material. These shall confirm to IP 65 protection class.

2. The Transmitter Enclosures shall be of following sizes (in millimeters).

   Type A - 1450(W) x 1000(D) x 2200(H) (For 5 to 6 Transmitters)
   Type B - 1100 (W) x 1000(D) x 2200(H) (Between 3 to 4 Transmitters)
   Type C - 800(W) x 1000(D) x 2200(H) (For 1 to 2 Transmitters)

3. These shall be reinforced as required to ensure true surfaces and to provide adequate Support for instruments and other equipment mounted therein. Double interlocking doors shall be provided and shall be arranged for maximum possible access to the module interior. Center posts or any member which would reduce access shall not be provided.

4. The doors shall be the three-point locking type constructed of not less than 3 mm steel sheet. Doors shall have concealed quick removal type pinned hinges and locking handles. Enclosure door locks shall accept the same / common key all over the plant. Neoprene material Gaskets shall be used between all mating sections to achieve dust proof enclosure rating for the modules and waterproof and dust tight rating on the Terminal / Junction boxes. All enclosures shall have access doors on Front and Rear sides.

5. Internal wirings between the Transmitters and Terminal / Junction box shall run through flexible dust tight conduits.

6. Anti Vibration Pads of minimum 15 mm thickness shall be provided for supporting each enclosure.

7. Construction of same shall be typically as per enclosed drawing CE/416/LIE/LIR/OGA1.

8. Service Power and Lighting

Each enclosure shall be provided with one receptacle, one light fixture & LED lamps with wire guard and one lighting switch and suitable 2P MCBs ,Six point 6/16A,240V AC Universal type power sockets with switch. Lighting switches may be doors actuated, mounted door. Light switches and receptacles shall be installed inside the enclosure on the wall near the latch side of the enclosure door. Light fixtures shall be installed on the ceilings of the enclosures. Power supplies for miscellaneous devices shall be provided with fuses located within the Enclosure JB. Fuses shall be mounted in fuse blocks. Fuse ratings will be given on electrical schematic diagrams. Power supply shall be 240 V AC.

9. Equipment Installation

a. Enclosures shall be provided to mount field instrument, equipment and accessories. Vendor shall prepare enclosures and piping drawings indicating the layout for each enclosure.

Special attention shall be given in the piping layout to avoid air traps in liquid filled piping, or water pockets in piping intended to be dry.

b. Drawings shall indicate the arrangement of all Piping, Valves and Fittings within the enclosures.

10. **Impulse Piping /Tubing**

a. Transmitter enclosures shall be complete with impulse tubing piping, valves from enclosure bulkhead connection to all instruments and necessary drain / blow down connections. The type, sizes, material and pressure class of pipes/tubes, fittings, valves etc. shall be suitable for the intended applications as per the Schemes / Tagging list of Instrument, provided by BHEL.

b. Bulkhead (Thickness shall be not less than 6mm) connection shall be used when instrument piping/ tubing enters the enclosure through Bulkhead plate. Typically through Bulk heads, Impulse pipe entry shall be through Top side of the Enclosure for Steam and Liquid services and for Air / flue gas services, impulse pipe entry shall be from Bottom side.

c. All Instrument Blow down lines, except those measuring vacuum shall be connected to a two-inch header, which is extended through one end of the enclosure and turned downward at other end.

d. Instrument piping and tubing shall be hydrostatically tested at one and one-half times the Design pressure (As per Instrument schedule) for that instruments except for vacuum measurement the test pressure will be 8 Kg / Cm2.

11. For Purging :

a. Pneumatic tubing shall be installed for all pneumatic devices, such as Air filter Regulator, Purge rotameters, Isolation valves, distribution air-header etc. Pneumatic tubing shall be installed in a neat workmanlike manner in protected locations with suitable supports. All Pipes / Tubes, which enter or leave the enclosure, shall be terminated on bulkhead fittings in the bulkhead plate. Pneumatic tubing material shall be ½" OD SS316 tubing Flareless SS- Tube fittings shall be used for tubing connections.

b. Instrument tubing schematic, connection and interconnections diagrams shall be furnished.

12. Wiring Within Enclosures and Grounding

Vendor shall furnish general arrangement and wiring diagrams for each transmitter Enclosures for approval.

13. **Enclosure Electrical Junction Box**

a. IP 65 junction box for the termination of all internal wiring shall be provided for each transmitter enclosure.

b. Junction boxes for enclosures shall be fabricated externally on one end of each enclosure assembly to accept field wiring through the top or bottom of the junction box. The

Junction box shall be 150 millimeters minimum depth. A hinged door shall give access to the interior of the junction box. Junction boxes shall be provided with LED Lamp lighting. Same key shall be used to lock both Junction box & enclosure.

II. OPEN TYPE TRANSMITTER RACKS:

1. Transmitter racks is provided for mounting transmitters and other accessories, in buildings and closed areas like the power house building / turbine hall.

2. The Transmitter Racks shall be of following sizes (in millimeters).

   Type A- 1600(W) x 650(D) x 2200(H) (For 5 to 7 Transmitters)
   Type B- 1100(W) x 650(D) x 2200(H) (Between 3 to 4 Transmitters)
   Type C- 800(W) x 650(D) x 1600(H) (For 1 to 2 transmitters)

3. Racks shall be constructed on structural members of adequate strength and rigidity to ensure proper support to the mounted instruments and equipment. Racks shall be of welded construction. Each rack shall be provided with a canopy to protect the instrument from dripping water or falling objects.

4. All Valves & Manifolds shall be securely mounted and the structural design shall be such that no item shall interfere with maintenance and removal of instrument, equipment and their accessories.

5. Construction of same shall be typically as per enclosed drawing CE/416/LIE/LIR/OGA1.

6. Service Power and Lighting

a. Each rack shall be provided with one receptacle, one light fixture with wire guard and one lighting switch,LED Lamp. Light fixtures shall be installed on the canopy of the rack.

b. Power supplies for miscellaneous devices shall be provided with fuses located within the rack JB. Fuses shall be mounted in fuse blocks. Fuse ratings will be given on electrical schematic diagrams. Power supply shall be 240 V AC.

7. Equipment Installation

Vendor shall prepare rack fabrication and piping drawings indicating the layout of each Rack. Transmitter/Instruments shall be installed using custom fabricated supports which are attached to the vertical members provided for this purpose. Drawings shall indicate the arrangement of all equipment, piping, valves and fittings within the rack and shall be subject to approval.

8. Impulse Piping / Tubing

a. Transmitter racks shall be complete with impulse tubing piping, valves from enclosure bulkhead connection to all instruments and necessary drain / blow down connections. The type, sizes, material and pressure class of pipes/tubes, fittings, valves etc. shall be suitable

for the intended applications as per the Schemes / Tagging list of Instrument, provided by BHEL.

b. Bulkhead (Thickness shall be not less than 6mm) connection shall be used when instrument piping/ tubing enters the enclosure through Bulkhead plate. Typically through Bulk heads, Impulse pipe entry shall be through top side of the Enclosure for Steam and Liquid services.

c. All Instrument Blow down lines, except those measuring vacuum shall be connected to a two-inch drain pipe header, which is extended through one end of the enclosure and turned downward for directing the blow down into drain.

d. Instrument piping and tubing shall be hydrostatically tested at one and one-half times the Design pressure (As per instrument schedule) for that instruments except for vacuum measurement the test pressure will be 8 Kg / Cm2.

9. Wiring of the Racks

a. A fully enclosed IP 65 type junction box shall be provided in each rack for housing the terminal blocks, power supply fuses and other electrical accessories, as required.

b. All electrical connections between instrument and the Terminals in Junction box shall be made. In addition all utility wiring for lighting and service power shall be installed.

c. Vendor shall furnish general arrangement and wiring diagrams for each transmitter rack for approval.

d. Junction boxes for the racks shall be mounted on one end of each assembly & should be inside the Rack to accept field wiring through the bottom of the junction box. The junction box shall be Minimum depth 200 mm. A Hinged door shall give access to the interior of the junction box. All junction boxes shall accept same key. JB to be of CRCA with 2mm thick and IP 65 protection class. Door handle shall be of SS. Self locking type with common key. Door gasket shall be of synthetic rubber.Earth bar shall be made of copper of size 25 X 6mm size.Earth stud shall be provided for safety grounding. TB shall be in multiple of 12 nos. Maximum **180 TBs** shall be provided for signal including spare as per Instrument schedule grouping.

III. General Requirement applicable to Transmitter Enclosures & Racks :

1. Surface preparation and Painting

a. All sheet metal / exterior steel surfaces shall rust free and scale free and all other residue during fabrication operation such as Oil, grease and salts etc. shall be removed by one or more solvent cleaning methods. Epoxy primer surface shall be applied to all exterior and interior surfaces. Epoxy paint shall be applied to all surfaces and the paint thickness shall be 100 to150 microns. The finish colours for exterior and interior surfaces shall conform to the shades mentioned in scope of supply.

1. Grounding

a. Enclosures and Racks shall be provided with a continuous tinned copper ground bus of minimum 50 mm X 6 mm cross section, extended along the entire length. The ground bus shall have two (2) bolts drilling with GI bolts and nuts at each end.

2. Name plate / Label.

a. Service details and Tag no. shall be engraved on a nameplate or label for each of the Transmitter. These Nameplates or Labels shall be of white non-hygroscopic (Polyamide sheet) material with engraved black lettering on white background. This shall be fixed on to the Impulse Pipe closer to the Transmitter inside the Enclosure / Rack.

3. Wiring Details

a. Interconnecting wiring shall be provided between all electrical devices mounted in the panels and between the devices and terminal blocks if the devices are to be connected to equipment outside the panels by cabling. All interior wiring shall be installed neatly and carefully and shall be terminated at suitable terminal blocks in the Junction box. Sufficient clearance shall be provided for all control and instrumentation leads.

b. Each wire shall be identified at both ends with wire designations as per approved wiring diagram. Interlocking type ferrules shall be used for identification.

c. All wire termination shall be made with insulated sleeve and cage clamp type terminals.

d. All signal wiring shall be done with 2 pair, 0.75 sq. mm annealed tinned copper, pair twisted overall & shielded (Individual & overall), voltage grade 650 V , FRLS PVC sheathed cable and 4 pair, 0.5 sq. mm for PS/DPS. For power supply application, 2.5 sq mm, 1100V cable shall be used.

e. Wires shall be dressed and run in trays or troughs with clamp-on type covers. Wiring may be neatly bunched in-groups by non-metallic cleats or bands. Shield wires shall be terminated on separate terminal blocks.

f. Internal wiring shall follow distinct color coding to segregate different voltage levels viz. 24V DC & 230V AC

g. Junction Box of enclosures will be provided with removable, gasketted cable gland for cable entrance.

4. Fuse Blocks

a. Fuse blocks shall be modular type with bakelite frame and reinforced retaining clips.

5. Terminal Blocks

a. Terminal blocks shall be DIN rail mounted and shall have Cage clamp type connection which shall be maintained for all panels uniformly.

b. The rated cross section of the terminal blocks shall be suitable for connecting 0.5-mm^2/2.5 mm^2. Conductor of suitable voltage grade as specified.

c. Terminal blocks shall be mounted vertically with adequate spacing between rows for routing the cable troughs and to allow adequate free workspace for termination and removal of wires.
d. Terminal blocks shall be provided with white marking strips/self adhesive marker cards.

e. At least 30 percent spare unused terminals shall be provided on each terminal blocks for circuit modifications and for termination of all conductors in a multi conductor control cables.

f. Terminal blocks for termination of electrical power supply shall be type WAGO / PHOENIX make of suitable size with marking strips.

g. The last terminal in a rail-mounted assembly shall be closed with an end plate and end bracket.

IV. Documents to be Submitted by Vendor for Approval :

1. OGA for Transmitter Enclosure and Racks.

2. Layout of Components in each of Transmitter Enclosure and Rack.

3. Electrical diagrams for each Transmitter Enclosure and Rack.

4. Component datasheets

5. Quality plan including Welding Procedure specification and Welder Procedure qualification Record.

6. The quality plan shall include Visual inspection, GA BOM/Layout features verification, Dimensions, Paint shade, thickness measurement, Alignment of sections, component ratings, Wiring, IR, HV, review of TC for instruments / Devices, Accessibility of TBs / Devices, Illumination, Tubing and Degree of protection (Review of type test certificate)

V. Specific requirements

1. Where grouping is not provided for instruments, same shall be indicated during detailed engineering.
2. SS tubing between valve manifold and transmitter for each service shall be done as per Transmitter Model Nos with mounting details will be provided by BHEL EDN.In Case If Transmitter Model Nos with mounting details are not received before dispatch, Vendor has to supply tube and tube connectors and Erect the transmitters and valve manifold during commissioning time as per BHEL EDN Instruction.
3. Packing should be Wooden packing is must for all the LIE/LIR consignment. Delicate items to be bubble wrapped with sufficient care.

PROJECT: SAGARADIGHI 1 X 660MW STPP UNIT#5 EXTENSION

CUSTOMER: M/s WBPDCL

CONSULTANT: M/s DCPL

INSTRUMENT SCHEDULE

COPY RIGHT AND CONFIDENTIAL

THE INFORMATION ON THIS DOCUMENT IS THE PROPERTY OF BHARAT HEAVY ELECTRICALS LIMITED. IT MUST NOT BE USED DIRECTLY OR INDIRECTLY IN ANY WAY DETRIMENTAL TO THE INTEREST OF THE COMPANY.

REVISIONS :	APPROVED BY		
	DIPTENDU GHOSH		
	PREPARED BY	ISSUED	DATE
	RAJESH LINGUTLA	416	09/10/23

KKS TAG	DESCRIPTION	INS TYPE	MEDIUM	OPR PRESS	DESIGN PRESS	UNIT PRESS	OPR TEMP (°C)	DESIGN TEMP (°C)	IP MATERIAL	SCHEME NO	AIR PURGING	CONT PURG	LIE/LIR	Type of LIE/LIR	Grouping Remarks
HFC01CP001	MILL A BOWL DIFF. PRESSURE	DPT	COAL + AIR	831 / 394	1161 / 530	mmWC	290 / 88	300 / 100	D	24	Yes	2	FSSS-LIE-07	LIE- TYPE -A	
HFC01CP002	MILL A BOWL DIFF. PRESSURE	DPT	COAL + AIR	831 / 394	1161 / 530	mmWC	290 / 88	300 / 100	D	24		2	FSSS-LIE-07	LIE- TYPE -A	
HFW21CP001	SEAL AIR TO UNDER BOWL DIFF. PRESSURE MILL A	DPT	SEAL AIR	1147 / 831	1227 / 1161	mmWC	35	50/ 300	D	24		2	FSSS-LIE-07	LIE- TYPE -A	
HFW21CP002	SEAL AIR TO UNDER BOWL DIFF. PRESSURE MILL A	DPT	SEAL AIR	1147 / 831	1227 / 1161	mmWC	35	50/ 300	D	24		2	FSSS-LIE-07	LIE- TYPE -A	
HFW21CP003	SEAL AIR TO UNDER BOWL DIFF. PRESSURE MILL A	DPT	SEAL AIR	1147 / 831	1227 / 1161	mmWC	35	50/ 300	D	24		2	FSSS-LIE-07	LIE- TYPE -A	
HFC02CP001	MILL B BOWL DIFF. PRESSURE	DPT	COAL + AIR	831 / 394	1161 / 530	mmWC	290 / 88	300 / 100	D	24	Yes	2	FSSS-LIE-08	LIE- TYPE -A	
HFC02CP002	MILL B BOWL DIFF. PRESSURE	DPT	COAL + AIR	831 / 394	1161 / 530	mmWC	290 / 88	300 / 100	D	24		2	FSSS-LIE-08	LIE- TYPE -A	
HFW22CP001	SEAL AIR TO UNDER BOWL DIFF. PRESSURE MILL B	DPT	SEAL AIR	1147 / 831	1227 / 1161	mmWC	35	50/ 300	D	24		2	FSSS-LIE-08	LIE- TYPE -A	
HFW22CP002	SEAL AIR TO UNDER BOWL DIFF. PRESSURE MILL B	DPT	SEAL AIR	1147 / 831	1227 / 1161	mmWC	35	50/ 300	D	24		2	FSSS-LIE-08	LIE- TYPE -A	
HFW22CP003	SEAL AIR TO UNDER BOWL DIFF. PRESSURE MILL B	DPT	SEAL AIR	1147 / 831	1227 / 1161	mmWC	35	50/ 300	D	24		2	FSSS-LIE-08	LIE- TYPE -A	
HFC03CP001	MILL C BOWL DIFF. PRESSURE	DPT	COAL + AIR	831 / 394	1161 / 530	mmWC	290 / 88	300 / 100	D	24	Yes	2	FSSS-LIE-09	LIE- TYPE -A	
HFC03CP002	MILL C BOWL DIFF. PRESSURE	DPT	COAL + AIR	831 / 394	1161 / 530	mmWC	290 / 88	300 / 100	D	24		2	FSSS-LIE-09	LIE- TYPE -A	
HFW23CP001	SEAL AIR TO UNDER BOWL DIFF. PRESSURE MILL C	DPT	SEAL AIR	1147 / 831	1227 / 1161	mmWC	35	50/ 300	D	24		2	FSSS-LIE-09	LIE- TYPE -A	
HFW23CP002	SEAL AIR TO UNDER BOWL DIFF. PRESSURE MILL C	DPT	SEAL AIR	1147 / 831	1227 / 1161	mmWC	35	50/ 300	D	24		2	FSSS-LIE-09	LIE- TYPE -A	
HFW23CP003	SEAL AIR TO UNDER BOWL DIFF. PRESSURE MILL C	DPT	SEAL AIR	1147 / 831	1227 / 1161	mmWC	35	50/ 300	D	24		2	FSSS-LIE-09	LIE- TYPE -A	
HFC04CP001	MILL D BOWL DIFF. PRESSURE	DPT	COAL + AIR	831 / 394	1161 / 530	mmWC	290 / 88	300 / 100	D	24	Yes	2	FSSS-LIE-10	LIE- TYPE -A	
HFC04CP002	MILL D BOWL DIFF. PRESSURE	DPT	COAL + AIR	831 / 394	1161 / 530	mmWC	290 / 88	300 / 100	D	24		2	FSSS-LIE-10	LIE- TYPE -A	
HFW24CP001	SEAL AIR TO UNDER BOWL DIFF. PRESSURE MILL D	DPT	SEAL AIR	1147 / 831	1227 / 1161	mmWC	35	50/ 300	D	24		2	FSSS-LIE-10	LIE- TYPE -A	
HFW24CP002	SEAL AIR TO UNDER BOWL DIFF. PRESSURE MILL D	DPT	SEAL AIR	1147 / 831	1227 / 1161	mmWC	35	50/ 300	D	24		2	FSSS-LIE-10	LIE- TYPE -A	
HFW24CP003	SEAL AIR TO UNDER BOWL DIFF. PRESSURE MILL D	DPT	SEAL AIR	1147 / 831	1227 / 1161	mmWC	35	50/ 300	D	24		2	FSSS-LIE-10	LIE- TYPE -A	
HFC05CP001	MILL E BOWL DIFF. PRESSURE	DPT	COAL + AIR	831 / 394	1161 / 530	mmWC	290 / 88	300 / 100	D	24	Yes	2	FSSS-LIE-11	LIE- TYPE -A	
HFC05CP002	MILL E BOWL DIFF. PRESSURE	DPT	COAL + AIR	831 / 394	1161 / 530	mmWC	290 / 88	300 / 100	D	24		2	FSSS-LIE-11	LIE- TYPE -A	
HFW25CP001	SEAL AIR TO UNDER BOWL DIFF. PRESSURE MILL E	DPT	SEAL AIR	1147 / 831	1227 / 1161	mmWC	35	50/ 300	D	24		2	FSSS-LIE-11	LIE- TYPE -A	
HFW25CP002	SEAL AIR TO UNDER BOWL DIFF. PRESSURE MILL E	DPT	SEAL AIR	1147 / 831	1227 / 1161	mmWC	35	50/ 300	D	24		2	FSSS-LIE-11	LIE- TYPE -A	
HFW25CP003	SEAL AIR TO UNDER BOWL DIFF. PRESSURE MILL E	DPT	SEAL AIR	1147 / 831	1227 / 1161	mmWC	35	50/ 300	D	24		2	FSSS-LIE-11	LIE- TYPE -A	
HFC06CP001	MILL F BOWL DIFF. PRESSURE	DPT	COAL + AIR	831 / 394	1161 / 530	mmWC	290 / 88	300 / 100	D	24	Yes	2	FSSS-LIE-12	LIE- TYPE -A	
HFC06CP002	MILL F BOWL DIFF. PRESSURE	DPT	COAL + AIR	831 / 394	1161 / 530	mmWC	290 / 88	300 / 100	D	24		2	FSSS-LIE-12	LIE- TYPE -A	
HFW26CP001	SEAL AIR TO UNDER BOWL DIFF. PRESSURE MILL F	DPT	SEAL AIR	1147 / 831	1227 / 1161	mmWC	35	50/ 300	D	24		2	FSSS-LIE-12	LIE- TYPE -A	
HFW26CP002	SEAL AIR TO UNDER BOWL DIFF. PRESSURE MILL F	DPT	SEAL AIR	1147 / 831	1227 / 1161	mmWC	35	50/ 300	D	24		2	FSSS-LIE-12	LIE- TYPE -A	
HFW26CP003	SEAL AIR TO UNDER BOWL DIFF. PRESSURE MILL F	DPT	SEAL AIR	1147 / 831	1227 / 1161	mmWC	35	50/ 300	D	24		2	FSSS-LIE-12	LIE- TYPE -A	
HFC07CP001	MILL G BOWL DIFF. PRESSURE	DPT	COAL + AIR	831 / 394	1161 / 530	mmWC	290 / 88	300 / 100	D	24	Yes	2	FSSS-LIE-13	LIE- TYPE -A	
HFC07CP002	MILL G BOWL DIFF. PRESSURE	DPT	COAL + AIR	831 / 394	1161 / 530	mmWC	290 / 88	300 / 100	D	24		2	FSSS-LIE-13	LIE- TYPE -A	
HFW27CP001	SEAL AIR TO UNDER BOWL DIFF. PRESSURE MILL G	DPT	SEAL AIR	1147 / 831	1227 / 1161	mmWC	35	50/ 300	D	24		2	FSSS-LIE-13	LIE- TYPE -A	
HFW27CP002	SEAL AIR TO UNDER BOWL DIFF. PRESSURE MILL G	DPT	SEAL AIR	1147 / 831	1227 / 1161	mmWC	35	50/ 300	D	24		2	FSSS-LIE-13	LIE- TYPE -A	
HFW27CP003	SEAL AIR TO UNDER BOWL DIFF. PRESSURE MILL G	DPT	SEAL AIR	1147 / 831	1227 / 1161	mmWC	35	50/ 300	D	24		2	FSSS-LIE-13	LIE- TYPE -A	
HFC08CP001	MILL H BOWL DIFF. PRESSURE	DPT	COAL + AIR	831 / 394	1161 / 530	mmWC	290 / 88	300 / 100	D	24	Yes	2	FSSS-LIE-14	LIE- TYPE -A	
HFC08CP002	MILL H BOWL DIFF. PRESSURE	DPT	COAL + AIR	831 / 394	1161 / 530	mmWC	290 / 88	300 / 100	D	24		2	FSSS-LIE-14	LIE- TYPE -A	
HFW28CP001	SEAL AIR TO UNDER BOWL DIFF. PRESSURE MILL H	DPT	SEAL AIR	1147 / 831	1227 / 1161	mmWC	35	50/ 300	D	24		2	FSSS-LIE-14	LIE- TYPE -A	
HFW28CP002	SEAL AIR TO UNDER BOWL DIFF. PRESSURE MILL H	DPT	SEAL AIR	1147 / 831	1227 / 1161	mmWC	35	50/ 300	D	24		2	FSSS-LIE-14	LIE- TYPE -A	
HFW28CP003	SEAL AIR TO UNDER BOWL DIFF. PRESSURE MILL H	DPT	SEAL AIR	1147 / 831	1227 / 1161	mmWC	35	50/ 300	D	24		2	FSSS-LIE-14	LIE- TYPE -A	
LBA01CP011	MAIN STEAM LINE PRESSURE -LEFT	PT	STEAM	277	294.8	kg/cm²	596	613	A	2			FSSS-LIE-15	LIE- TYPE -B	
LBA01CP012	MAIN STEAM LINE PRESSURE -LEFT	PT	STEAM	277	294.8	kg/cm²	596	613	A	2			FSSS-LIE-15	LIE- TYPE -B	
LBA01CP013	MAIN STEAM LINE PRESSURE -LEFT	PT	STEAM	277	294.8	kg/cm²	596	613	A	2			FSSS-LIE-15	LIE- TYPE -B	
LBA02CP011	MAIN STEAM LINE PRESSURE -RIGHT	PT	STEAM	277	294.8	kg/cm²	596	613	A	2			FSSS-LIE-16	LIE- TYPE -B	
LBA02CP012	MAIN STEAM LINE PRESSURE -RIGHT	PT	STEAM	277	294.8	kg/cm²	596	613	A	2			FSSS-LIE-16	LIE- TYPE -B	
LBA02CP013	MAIN STEAM LINE PRESSURE -RIGHT	PT	STEAM	277	294.8	kg/cm²	596	613	A	2			FSSS-LIE-16	LIE- TYPE -B	
HHL40101	SADC PRESSURE SWITCH-COAL ELEV.	PS	SEC. AIR	0.21	1.05	Kg/Cm²			C				FSSS-LIE-17	LIE- TYPE -A	
HHL40102	SADC PRESSURE SWITCH-COAL ELEV.	PS	SEC. AIR	0.21	1.05	Kg/Cm²			C				FSSS-LIE-17	LIE- TYPE -A	
HHL40111	SADC PRESSURE SWITCH-OIL ELEV.	PS	SEC. AIR	0.21	1.05	Kg/Cm²			C				FSSS-LIE-17	LIE- TYPE -A	
HHL40121	SADC PRESSURE SWITCH-AUX AIR ELEV.	PS	SEC. AIR	0.21	1.05	Kg/Cm²			C				FSSS-LIE-17	LIE- TYPE -A	
HHL40122	SADC PRESSURE SWITCH-AUX AIR ELEV.	PS	SEC. AIR	0.21	1.05	Kg/Cm²			C				FSSS-LIE-17	LIE- TYPE -A	
HHL40141	SADC PRESSURE SWITCH CFS ELEV.	PS	SEC. AIR	0.21	1.05	Kg/Cm²			C				FSSS-LIE-17	LIE- TYPE -A	
HHL40103	SADC PRESSURE SWITCH-COAL ELEV.	PS	SEC. AIR	0.21	1.05	Kg/Cm²			C				FSSS-LIE-18	LIE- TYPE -A	
HHL40104	SADC PRESSURE SWITCH-COAL ELEV.	PS	SEC. AIR	0.21	1.05	Kg/Cm²			C				FSSS-LIE-18	LIE- TYPE -A	
HHL40112	SADC PRESSURE SWITCH-OIL ELEV.	PS	SEC. AIR	0.21	1.05	Kg/Cm²			C				FSSS-LIE-18	LIE- TYPE -A	
HHL40123	SADC PRESSURE SWITCH-AUX AIR ELEV.	PS	SEC. AIR	0.21	1.05	Kg/Cm²			C				FSSS-LIE-18	LIE- TYPE -A	
HHL40142	SADC PRESSURE SWITCH CFS ELEV.	PS	SEC. AIR	0.21	1.05	Kg/Cm²			C				FSSS-LIE-18	LIE- TYPE -A	
HHL40143	SADC PRESSURE SWITCH CFS ELEV.	PS	SEC. AIR	0.21	1.05	Kg/Cm²			C				FSSS-LIE-18	LIE- TYPE -A	
HHL40105	SADC PRESSURE SWITCH-COAL ELEV.	PS	SEC. AIR	0.21	1.05	Kg/Cm²			C				FSSS-LIE-19	LIE- TYPE -A	
HHL40106	SADC PRESSURE SWITCH-COAL ELEV.	PS	SEC. AIR	0.21	1.05	Kg/Cm²			C				FSSS-LIE-19	LIE- TYPE -A	
HHL40113	SADC PRESSURE SWITCH-OIL ELEV.	PS	SEC. AIR	0.21	1.05	Kg/Cm²			C				FSSS-LIE-19	LIE- TYPE -A	
HHL40124	SADC PRESSURE SWITCH-AUX AIR ELEV.	PS	SEC. AIR	0.21	1.05	Kg/Cm²			C				FSSS-LIE-19	LIE- TYPE -A	
HHL40144	SADC PRESSURE SWITCH CFS ELEV.	PS	SEC. AIR	0.21	1.05	Kg/Cm²			C				FSSS-LIE-19	LIE- TYPE -A	
HHL40145	SADC PRESSURE SWITCH CFS ELEV.	PS	SEC. AIR	0.21	1.05	Kg/Cm²			C				FSSS-LIE-19	LIE- TYPE -A	
HHL40107	SADC PRESSURE SWITCH-COAL ELEV.	PS	SEC. AIR	0.21	1.05	Kg/Cm²			C				FSSS-LIE-20	LIE- TYPE -A	
HHL40108	SADC PRESSURE SWITCH-COAL ELEV.	PS	SEC. AIR	0.21	1.05	Kg/Cm²			C				FSSS-LIE-20	LIE- TYPE -A	
HHL40114	SADC PRESSURE SWITCH-OIL ELEV.	PS	SEC. AIR	0.21	1.05	Kg/Cm²			C				FSSS-LIE-20	LIE- TYPE -A	
HHL40125	SADC PRESSURE SWITCH-AUX AIR ELEV.	PS	SEC. AIR	0.21	1.05	Kg/Cm²			C				FSSS-LIE-20	LIE- TYPE -A	
HHL40146	SADC PRESSURE SWITCH CFS ELEV.	PS	SEC. AIR	0.21	1.05	Kg/Cm²			C				FSSS-LIE-20	LIE- TYPE -A	
HHL40147	SADC PRESSURE SWITCH CFS ELEV.	PS	SEC. AIR	0.21	1.05	Kg/Cm²			C				FSSS-LIE-20	LIE- TYPE -A	
HHL40126	SADC PRESSURE SWITCH-AUX AIR ELEV.	PS	SEC. AIR	0.21	1.05	Kg/Cm²			C				FSSS-LIE-21	LIE- TYPE -C	
HHL40127	SADC PRESSURE SWITCH-CCOFA ELEV.	PS	SEC. AIR	0.21	1.05	Kg/Cm²			C				FSSS-LIE-21	LIE- TYPE -C	
HHL40128	SADC PRESSURE SWITCH L-SOFA ELEV.	PS	SEC. AIR	0.21	1.05	Kg/Cm²			C				FSSS-LIE-22	LIE- TYPE -B	
HHL40129	SADC PRESSURE SWITCH L-SOFA ELEV.	PS	SEC. AIR	0.21	1.05	Kg/Cm²			C				FSSS-LIE-22	LIE- TYPE -B	
HHL40130	SADC PRESSURE SWITCH L-SOFA ELEV.	PS	SEC. AIR	0.21	1.05	Kg/Cm²			C				FSSS-LIE-22	LIE- TYPE -B	
HHL40131	SADC PRESSURE SWITCH H-SOFA ELEV.	PS	SEC. AIR	0.21	1.05	Kg/Cm²			C				FSSS-LIE-23	LIE- TYPE -B	

NOTE:FOR SHCEME NO 14 AND 16 -WHERE EVER DESIGN PRESSURE >=40KG/CM2-TWO DRAIN VALVES SHALL BE PROVIDED PER LINE.

KKS TAG	DESCRIPTION	INS TYPE	MEDIUM	OPR PRESS	DESIGN PRESS	UNIT PRESS	OPR TEMP (°C)	DESIGN TEMP (°C)	IP MATERIAL	SCHEME NO	AIR PURGING	CONT PURG	LIE/LIR	Type of LIE/LIR	Grouping Remarks
HHL40132	SADC PRESSURE SWITCH H-SOFA ELEV.	PS	SEC. AIR	0.21	1.05	Kg/Cm²			C				FSSS-LIE-23	LIE- TYPE -B	
HHL40133	SADC PRESSURE SWITCH H-SOFA ELEV.	PS	SEC. AIR	0.21	1.05	Kg/Cm²			C				FSSS-LIE-23	LIE- TYPE -B	
LBA01CP015	MS HDR PRESS - L (BOP READY - COMBUSION CTRL)	PT	STEAM	278	294.8	Kg/Cm²	593	601	A	2			LIE-01	LIE- TYPE -A	
LBA01CP016	MS HDR PRESS - L (BOP READY - COMBUSION CTRL)	PT	STEAM	278	294.8	Kg/Cm²	593	601	A	2			LIE-01	LIE- TYPE -A	
LBA01CP017	MS HDR PRESS - L (BOP READY - COMBUSION CTRL)	PT	STEAM	278	294.8	Kg/Cm²	593	601	A	2			LIE-01	LIE- TYPE -A	
LBA02CP015	MS HDR PRESS - R (BOP READY - COMBUSION CTRL)	PT	STEAM	278	294.8	Kg/Cm²	593	601	A	2			LIE-01	LIE- TYPE -A	
LBA02CP016	MS HDR PRESS -R (BOP READY - COMBUSION CTRL)	PT	STEAM	278	294.8	Kg/Cm²	593	601	A	2			LIE-01	LIE- TYPE -A	
LBA02CP017	MS HDR PRESS - R (BOP READY - COMBUSION CTRL)	PT	STEAM	278	294.8	Kg/Cm²	593	601	A	2			LIE-01	LIE- TYPE -A	
LBA01CP018	MS HDR PRESS -L (HPBP PRESS CTRL)	PT	STEAM	278	294.8	Kg/Cm²	593	601	A	2			LIE-02	LIE- TYPE -A	
LBA01CP019	MS HDR PRESS -L (HPBP PRESS CTRL)	PT	STEAM	278	294.8	Kg/Cm²	593	601	A	2			LIE-02	LIE- TYPE -A	
LBA01CP020	MS HDR PRESS -L (HPBP PRESS CTRL)	PT	STEAM	278	294.8	Kg/Cm²	593	601	A	2			LIE-02	LIE- TYPE -A	
LBA02CP018	MS HDR PRESS -R (HPBP PRESS CTRL)	PT	STEAM	278	294.8	Kg/Cm²	593	601	A	2			LIE-02	LIE- TYPE -A	
LBA02CP019	MS HDR PRESS -R (HPBP PRESS CTRL)	PT	STEAM	278	294.8	Kg/Cm²	593	601	A	2			LIE-02	LIE- TYPE -A	
LBA02CP020	MS HDR PRESS -R (HPBP PRESS CTRL)	PT	STEAM	278	294.8	Kg/Cm²	593	601	A	2			LIE-02	LIE- TYPE -A	
LBA01CP014	MS PRESS AT SH O/L-L	PT	STEAM	278	294.8	Kg/Cm²	593	601	A	2			LIE-03	LIE- TYPE -C	
LBB01CP011	HRH STM PRESS AT RH O/L - L	PT	STEAM	60.62	68.5	Kg/Cm²	593	601	A	2			LIE-03	LIE- TYPE -C	
LBA02CP014	MS PRESS AT SH O/L-R	PT	STEAM	278	294.8	Kg/Cm²	593	601	A	2			LIE-04	LIE- TYPE -C	
LBB02CP011	HRH STM PRESS AT RH O/L - R	PT	STEAM	60.62	68.5	Kg/Cm²	593	601	A	2			LIE-04	LIE- TYPE -C	
LBC01CP011	CRH STM PRESS AT RH I/L-L	PT	STEAM	65.44	74.2	Kg/Cm²	365.8	370	C	14			LIE-05	LIE- TYPE -C	
LBC02CP011	CRH STM PRESS AT RH I/L-R	PT	STEAM	65.44	74.2	Kg/Cm²	365.8	370	C	14			LIE-06	LIE- TYPE -C	
LCL10CL001	FLASH TANK DRAIN TANK LVL	LT	COND	1.1	7.03	Kg/Cm²	110	177	C	16			LIE-07	LIE- TYPE -A	
LCL10CL002	FLASH TANK DRAIN TANK LVL	LT	COND	1.1	7.03	Kg/Cm²	110	177	C	16			LIE-07	LIE- TYPE -A	
LCL10CL003	FLASH TANK DRAIN TANK LVL	LT	COND	1.1	7.03	Kg/Cm²	110	177	C	16			LIE-07	LIE- TYPE -A	
LCL10CP001	FLASH TANK PRESS	PT	COND	1.1	7	Kg/Cm²	110	177	C	14			LIE-07	LIE- TYPE -A	
LCL30CP001	PRESSURE AT CONDENSATE PUMP DISCHARGE LINE	PT	COND	1.1	7.03	Kg/Cm²	110	177	C	14			LIE-07	LIE- TYPE -A	
SDA12CP001	FLASH TANK DRAIN TANK OVERFLOW QUENCHING LINE	PT	WATER	6	17.2	Kg/Cm²	36	80	C	14			LIE-07	LIE- TYPE -A	
LCL10CT001	FLASH TANK TEMP	PRT-100											LIE-07-JB	LIE- TYPE -A	Wiring shall be joined in LIE/LIR.For each PRT-100 sensor 15 Nos TBs shall be provided.
LCL10CT003	FLASH TANK DRAIN TANK TEMP	PRT-100											LIE-07-JB	LIE- TYPE -A	Wiring shall be joined in LIE/LIR.For each PRT-100 sensor 15 Nos TBs shall be provided.
LCL20CT001	FLASH TANK WASTE DRN TEMP-1	PRT-100											LIE-07-JB	LIE- TYPE -A	Wiring shall be joined in LIE/LIR.For each PRT-100 sensor 15 Nos TBs shall be provided.
LCL20CT002	FLASH TANK WASTE DRN TEMP-2	PRT-100											LIE-07-JB	LIE- TYPE -A	Wiring shall be joined in LIE/LIR.For each PRT-100 sensor 15 Nos TBs shall be provided.
QHX10CP001	COOLING WTR SUPPLY HDR PRESS	PT	DMCW	6	10	Kg/Cm²	39	60	F	18			LIE-08	LIE- TYPE -B	
QHX11CP001	COOLING WTR RETURN HDR PRESS	PT	DMCW	6	10	Kg/Cm²	39	60	F	18			LIE-08	LIE- TYPE -B	
QHX18CP001	CW SUPPLY HEADER PRESSURE AT BCW(S) AT MILLS A,B,C,D	PT	DMCW	6	10	Kg/Cm²	39	60	F	18			LIE-08	LIE- TYPE -B	
QHX19CP001	CW SUPPLY HEADER PRESSURE AT BCW(S) AT MILLS E,F,G,H	PT	DMCW	6	10	Kg/Cm²	39	60	F	18			LIE-08	LIE- TYPE -B	
QHX10CT001	COOLING WTR SUPPLY HEADER TEMP	PRT-100	DMCW										LIE-08-JB	LIE- TYPE -B	Wiring shall be joined in LIE/LIR.For each PRT-100 sensor 15 Nos TBs shall be provided.
QHX11CT001	COOLING WTR RET HDR TEMP	PRT-100	DMCW										LIE-08-JB	LIE- TYPE -B	Wiring shall be joined in LIE/LIR.For each PRT-100 sensor 15 Nos TBs shall be provided.
QHX18CT001	CW SUPPLY HEADER TEMPERATURE AT BCW(S) AT MILLS A,B,C,D	PRT-100	DMCW										LIE-08-JB	LIE- TYPE -B	Wiring shall be joined in LIE/LIR.For each PRT-100 sensor 15 Nos TBs shall be provided.
QHX19CT001	CW SUPPLY HEADER TEMPERATURE AT BCW(S) AT MILLS E,F,G,H	PRT-100	DMCW										LIE-08-JB	LIE- TYPE -B	Wiring shall be joined in LIE/LIR.For each PRT-100 sensor 15 Nos TBs shall be provided.
QHX20CL001	EMG COOLING WTR TANK LVL	LT	DMCW	6	10	Kg/Cm²	39	60	F	20			LIE-09	LIE- TYPE -C	
QHX20CL002	EMG COOLING WTR TANK LVL	LT	DMCW	6	10	Kg/Cm²	39	60	F	20			LIE-09	LIE- TYPE -C	
QHX24CP001	PA FAN-A SUC HDR PRESS	PT	DMCW	6	10	Kg/Cm²	39	60	F	18			LIE-10	LIE- TYPE -B	
QHX24CP002	PA FAN-A DISH HDR PRESS	PT	DMCW	6	10	Kg/Cm²	39	60	F	18			LIE-10	LIE- TYPE -B	
QHX24CP004	PA FAN-A DISH HDR PRESS	PT	DMCW	6	10	Kg/Cm²	39	60	F	18			LIE-10	LIE- TYPE -B	
QHX24CT001	PA FAN-A SUC HDR TEMP	PRT-100	DMCW	6	10	Kg/Cm²	39	60					LIE-10-JB	LIE- TYPE -B	Wiring shall be joined in LIE/LIR.For each PRT-100 sensor 15 Nos TBs shall be provided.
QHX24CT002	PA FAN-A DISH HDR TEMP	PRT-100	DMCW	6	10	Kg/Cm²	39	60					LIE-10-JB	LIE- TYPE -B	Wiring shall be joined in LIE/LIR.For each PRT-100 sensor 15 Nos TBs shall be provided.
QHX24CT003	PA FAN-A DISH HDR TEMP	PRT-100	DMCW	6	10	Kg/Cm²	39	60					LIE-10-JB	LIE- TYPE -B	Wiring shall be joined in LIE/LIR.For each PRT-100 sensor 15 Nos TBs shall be provided.
HFE71CF001	MIXED AIR BEFORE MILL:A FLOW	FT	HOT PA	831	1161	mmWC	290	300	D	24	Yes	2	LIE-11	LIE- TYPE -B	
HFE71CF002	MIXED AIR BEFORE MILL:A FLOW	FT	HOT PA	831	1161	mmWC	290	300	D	24		2	LIE-11	LIE- TYPE -B	
HFE71CF003	MIXED AIR BEFORE MILL:A FLOW	FT	HOT PA	831	1161	mmWC	290	300	D	24		2	LIE-11	LIE- TYPE -B	
HFE71CP001	MIXED AIR BEFORE MILL:A PRESS	PT	HOT PA	831	1161	mmWC	290	300	D	22		1	LIE-11	LIE- TYPE -B	
HFE72CF001	MIXED AIR BEFORE MILL:B FLOW	FT	HOT PA	831	1161	mmWC	290	300	D	24	Yes	2	LIE-12	LIE- TYPE -B	
HFE72CF002	MIXED AIR BEFORE MILL:B FLOW	FT	HOT PA	831	1161	mmWC	290	300	D	24		2	LIE-12	LIE- TYPE -B	
HFE72CF003	MIXED AIR BEFORE MILL:B FLOW	FT	HOT PA	831	1161	mmWC	290	300	D	24		2	LIE-12	LIE- TYPE -B	
HFE72CP001	MIXED AIR BEFORE MILL:B PRESS	PT	HOT PA	831	1161	mmWC	290	300	D	22		1	LIE-12	LIE- TYPE -B	
HFE73CF001	MIXED AIR BEFORE MILL:C FLOW	FT	HOT PA	831	1161	mmWC	290	300	D	24	Yes	2	LIE-13	LIE- TYPE -B	
HFE73CF002	MIXED AIR BEFORE MILL:C FLOW	FT	HOT PA	831	1161	mmWC	290	300	D	24		2	LIE-13	LIE- TYPE -B	
HFE73CF003	MIXED AIR BEFORE MILL:C FLOW	FT	HOT PA	831	1161	mmWC	290	300	D	24		2	LIE-13	LIE- TYPE -B	
HFE73CP001	MIXED AIR BEFORE MILL:C PRESS	PT	HOT PA	831	1161	mmWC	290	300	D	22		1	LIE-13	LIE- TYPE -B	
HFE74CF001	MIXED AIR BEFORE MILL:D FLOW	FT	HOT PA	831	1161	mmWC	290	300	D	24	Yes	2	LIE-14	LIE- TYPE -B	
HFE74CF002	MIXED AIR BEFORE MILL:D FLOW	FT	HOT PA	831	1161	mmWC	290	300	D	24		2	LIE-14	LIE- TYPE -B	
HFE74CF003	MIXED AIR BEFORE MILL:D FLOW	FT	HOT PA	831	1161	mmWC	290	300	D	24		2	LIE-14	LIE- TYPE -B	
HFE74CP001	MIXED AIR BEFORE MILL:D PRESS	PT	HOT PA	831	1161	mmWC	290	300	D	22		1	LIE-14	LIE- TYPE -B	
HFE75CF001	MIXED AIR BEFORE MILL:E FLOW	FT	HOT PA	831	1161	mmWC	290	300	D	24	Yes	2	LIE-15	LIE- TYPE -B	
HFE75CF002	MIXED AIR BEFORE MILL:E FLOW	FT	HOT PA	831	1161	mmWC	290	300	D	24		2	LIE-15	LIE- TYPE -B	
HFE75CF003	MIXED AIR BEFORE MILL:E FLOW	FT	HOT PA	831	1161	mmWC	290	300	D	24		2	LIE-15	LIE- TYPE -B	
HFE75CP001	MIXED AIR BEFORE MILL:E PRESS	PT	HOT PA	831	1161	mmWC	290	300	D	22		1	LIE-15	LIE- TYPE -B	
HFE76CF001	MIXED AIR BEFORE MILL:F FLOW	FT	HOT PA	831	1161	mmWC	290	300	D	24	Yes	2	LIE-16	LIE- TYPE -B	
HFE76CF002	MIXED AIR BEFORE MILL:F FLOW	FT	HOT PA	831	1161	mmWC	290	300	D	24		2	LIE-16	LIE- TYPE -B	
HFE76CF003	MIXED AIR BEFORE MILL:F FLOW	FT	HOT PA	831	1161	mmWC	290	300	D	24		2	LIE-16	LIE- TYPE -B	
HFE76CP001	MIXED AIR BEFORE MILL:F PRESS	PT	HOT PA	831	1161	mmWC	290	300	D	22		1	LIE-16	LIE- TYPE -B	
HFE77CF001	MIXED AIR BEFORE MILL:G FLOW	FT	HOT PA	831	1161	mmWC	290	300	D	24	Yes	2	LIE-17	LIE- TYPE -B	
HFE77CF002	MIXED AIR BEFORE MILL:G FLOW	FT	HOT PA	831	1161	mmWC	290	300	D	24		2	LIE-17	LIE- TYPE -B	
HFE77CF003	MIXED AIR BEFORE MILL:G FLOW	FT	HOT PA	831	1161	mmWC	290	300	D	24		2	LIE-17	LIE- TYPE -B	
HFE77CP001	MIXED AIR BEFORE MILL:G PRESS	PT	HOT PA	831	1161	mmWC	290	300	D	22		1	LIE-17	LIE- TYPE -B	
HFE78CF001	MIXED AIR BEFORE MILL:H FLOW	FT	HOT PA	831	1161	mmWC	290	300	D	24	Yes	2	LIE-18	LIE- TYPE -B	
HFE78CF002	MIXED AIR BEFORE MILL:H FLOW	FT	HOT PA	831	1161	mmWC	290	300	D	24		2	LIE-18	LIE- TYPE -B	

NOTE:FOR SHCEME NO 14 AND 16 -WHERE EVER DESIGN PRESSURE >=40KG/CM2-TWO DRAIN VALVES SHALL BE PROVIDED PER LINE.

KKS TAG	DESCRIPTION	INS TYPE	MEDIUM	OPR PRESS	DESIGN PRESS	UNIT PRESS	OPR TEMP (°C)	DESIGN TEMP (°C)	IP MATERIAL	SCHEME NO	AIR PURGING	CONT PURG	LIE/LIR	Type of LIE/LIR	Grouping Remarks
HFE78CF003	MIXED AIR BEFORE MILL:H FLOW	FT	HOT PA	831	1161	mmWC	290	300	D	24		2	LIE-18	LIE- TYPE -B	
HFE78CP001	MIXED AIR BEFORE MILL:H PRESS	PT	HOT PA	831	1161	mmWC	290	300	D	22		1	LIE-18	LIE- TYPE -B	
HFW20CP001	SEAL AIR FAN DISCHARGE/ CPA HEADER DP	DPT	SEAL AIR	1147 / 1125	1227 / 1447	mmWC	35	50 / 58	D	24			LIE-19	LIE- TYPE -C	
HFW20CP002	SEAL AIR FAN DISCH PRESS	PT	SEAL AIR	1147	1227	mmWC	35	50	D	22			LIE-19	LIE- TYPE -C	
QHX23CP001	PA FAN-B SUC HDR PRESS	PT	DMCW	6	10	Kg/Cm²	39	60	F	18			LIE-20	LIE- TYPE -B	
QHX23CP002	PA FAN-B DISH HDR PRESS	PT	DMCW	6	10	Kg/Cm²	39	60	F	18			LIE-20	LIE- TYPE -B	
QHX23CP003	PA FAN-B DISH HDR PRESS	PT	DMCW	6	10	Kg/Cm²	39	60	F	18			LIE-20	LIE- TYPE -B	
QHX23CT001	PA FAN-B SUC HDR TEMP	PRT-100	DMCW	6	10	Kg/Cm²	39	60					LIE-20-JB	LIE- TYPE -B	Wiring shall be joined in LIE/LIR.For each PRT-100 sensor 15 Nos TBs shall be provided.
QHX23CT002	PA FAN-B DISH HDR TEMP	PRT-100	DMCW	6	10	Kg/Cm²	39	60					LIE-20-JB	LIE- TYPE -B	Wiring shall be joined in LIE/LIR.For each PRT-100 sensor 15 Nos TBs shall be provided.
QHX23CT003	PA FAN-B DISH HDR TEMP	PRT-100	DMCW	6	10	Kg/Cm²	39	60					LIE-20-JB	LIE- TYPE -B	Wiring shall be joined in LIE/LIR.For each PRT-100 sensor 15 Nos TBs shall be provided.
HLB10CP001	FD FAN-A SUC CHAMBER PRESS	PT	SEC. AIR	-17	-25	mmWC	27	50	D	22			LIE-21	LIE- TYPE -B	
HLB10CP003	FD FAN-A O/L PRESS AT DIFFUSER	PT	SEC. AIR	277	414	mmWC	30	53	D	22			LIE-21	LIE- TYPE -B	
HLB15CP001	FD FAN-B SUC CHAMBER PRESS	PT	SEC. AIR	-17	-25	mmWC	27	50	D	22			LIE-21	LIE- TYPE -B	
HLB15CP003	FD FAN-B O/L PRESS AT DIFFUSER	PT	SEC. AIR	277	414	mmWC	30	53	D	22			LIE-21	LIE- TYPE -B	
HLA10CT001	FD FAN-A O/L TEMP	PRT-100	SEC. AIR	277	414	mmWC	30	53					LIE-21-JB	LIE- TYPE -B	Wiring shall be joined in LIE/LIR.For each PRT-100 sensor 15 Nos TBs shall be provided.
HLA15CT001	FD FAN-B O/L TEMP	PRT-100	SEC. AIR	277	414	mmWC	30	53					LIE-21-JB	LIE- TYPE -B	Wiring shall be joined in LIE/LIR.For each PRT-100 sensor 15 Nos TBs shall be provided.
HLB10CT001	FD FAN-A SUC TEMP	PRT-100	SEC. AIR	277	414	mmWC	30	53					LIE-21-JB	LIE- TYPE -B	Wiring shall be joined in LIE/LIR.For each PRT-100 sensor 15 Nos TBs shall be provided.
HLB15CT001	FD FAN-B SUC TEMP	PRT-100	SEC. AIR	277	414	mmWC	30	53					LIE-21-JB	LIE- TYPE -B	Wiring shall be joined in LIE/LIR.For each PRT-100 sensor 15 Nos TBs shall be provided.
HFE10CP001	PA FAN-A SUCTION PRESSURE	PT	PY. AIR	-10	-25	mmWC	27	50	D	22			LIE-22	LIE- TYPE -A	
HFE10CP002	PA FAN-A SUCTION PRESSURE	PT	PY. AIR	-10	-25	mmWC	27	50	D	22			LIE-22	LIE- TYPE -A	
HFE10CP003	PA FAN-A DP ACRS SUC CHAMBER & U/S OF IMPELLER HOUSING	DPT	PY. AIR	-10	-25	mmWC	27	50	D	24			LIE-22	LIE- TYPE -A	
HFE10CP004	PA FAN-A DP ACRS SUC CHAMBER & U/S OF IMPELLER HOUSING	DPT	PY. AIR	-10	-25	mmWC	27	50	D	24			LIE-22	LIE- TYPE -A	
HFE10CP005	PA FAN-A O/L PRESS AT DIFFUSER	PT	PY. AIR	1125	1447	mmWC	35	58	D	22			LIE-22	LIE- TYPE -A	
HFE10CP006	PA FAN-A O/L PRESS AT DIFFUSER	PT	PY. AIR	1125	1447	mmWC	35	58	D	22			LIE-22	LIE- TYPE -A	
HFE10CT001	PA FAN-A SUC TEMP	PRT-100	PY. AIR	1125	1447	mmWC	35	58					LIE-22-JB	LIE- TYPE -A	Wiring shall be joined in LIE/LIR.For each PRT-100 sensor 15 Nos TBs shall be provided.
HFE10CT030	PA FAN-A SUC TEMP	PRT-100	PY. AIR	1125	1447	mmWC	35	58					LIE-22-JB	LIE- TYPE -A	Wiring shall be joined in LIE/LIR.For each PRT-100 sensor 15 Nos TBs shall be provided.
HFE20CT001	PA FAN-A O/L TEMP	PRT-100	PY. AIR	1125	1447	mmWC	35	58					LIE-22-JB	LIE- TYPE -A	Wiring shall be joined in LIE/LIR.For each PRT-100 sensor 15 Nos TBs shall be provided.
HFE15CP001	PA FAN-B SUCTION PRESSURE	PT	PY. AIR	-10	-25	mmWC	27	50	D	22			LIE-23	LIE- TYPE -A	
HFE15CP002	PA FAN-B SUCTION PRESSURE	PT	PY. AIR	-10	-25	mmWC	27	50	D	22			LIE-23	LIE- TYPE -A	
HFE15CP003	PA FAN-B DP ACRS SUC CHAMBER & U/S OF IMPELLER HOUSING	DPT	PY. AIR	-10	-25	mmWC	27	50	D	24			LIE-23	LIE- TYPE -A	
HFE15CP004	PA FAN-B DP ACRS SUC CHAMBER & U/S OF IMPELLER HOUSING	DPT	PY. AIR	-10	-25	mmWC	27	50	D	24			LIE-23	LIE- TYPE -A	
HFE15CP005	PA FAN-B O/L PRESS AT DIFFUSER	PT	PY. AIR	1125	1447	mmWC	35	58	D	22			LIE-23	LIE- TYPE -A	
HFE15CP006	PA FAN-B O/L PRESS AT DIFFUSER	PT	PY. AIR	1125	1447	mmWC	35	58	D	22			LIE-23	LIE- TYPE -A	
HFE15CT001	PA FAN-B SUC TEMP	PRT-100	PY. AIR	1125	1447	mmWC	35	58					LIE-23-JB	LIE- TYPE -A	Wiring shall be joined in LIE/LIR.For each PRT-100 sensor 15 Nos TBs shall be provided.
HFE15CT030	PA FAN-B SUC TEMP	PRT-100	PY. AIR	1125	1447	mmWC	35	58					LIE-23-JB	LIE- TYPE -A	Wiring shall be joined in LIE/LIR.For each PRT-100 sensor 15 Nos TBs shall be provided.
HFE25CT001	PA FAN-B O/L TEMP	PRT-100	PY. AIR	1125	1447	mmWC	35	58					LIE-23-JB	LIE- TYPE -A	Wiring shall be joined in LIE/LIR.For each PRT-100 sensor 15 Nos TBs shall be provided.
HBK10CP001	FURNACE PRESS (WIDE RANGE) - L	PT	FLUE GAS	-5	-10	mmWC	1199	1300	D	22	Yes	1	LIE-24	LIE- TYPE -B	
HBK10CP003	FURNACE PRESS - L	PT	FLUE GAS	-5	-10	mmWC	1199	1300	D	22		1	LIE-24	LIE- TYPE -B	
HBK10CP004	FURNACE PRESS - L	PT	FLUE GAS	-5	-10	mmWC	1199	1300	D	22		1	LIE-24	LIE- TYPE -B	
HBK10CP005	DP AT FURN TO HOT PA HEADER - L	DPT	FLUE GAS / PY. AIR	-5 / 1008	-10 / 1238	mmWC	1199 / 326	1300 / 400	D	24		2	LIE-24	LIE- TYPE -B	
HBK15CP003	FURNACE PRESS - R	PT	FLUE GAS	-5	-10	mmWC	1199	1300	D	22	Yes	1	LIE-25	LIE- TYPE -B	
HBK15CP004	DP AT FURN TO HOT PA HEADER - R	DPT	FLUE GAS / PY. AIR	-5 / 1008	-10 / 1238	mmWC	1199 / 326	1300 / 400	D	24		2	LIE-25	LIE- TYPE -B	
HBK15CP005	DP AT FURN TO HOT PA HEADER - R	DPT	FLUE GAS / PY. AIR	-5 / 1008	-10 / 1238	mmWC	1199 / 326	1300 / 400	D	24		2	LIE-25	LIE- TYPE -B	
HFE30CP001	AH-A PY AIR I/L PRESS	PT	PY. AIR	1103	1395	mmWC	35	58	D	22	Yes	1	LIE-26	LIE- TYPE -B	
HLA20CP001	AH-A SEC AIR I/L PRESS	PT	SEC. AIR	254	371	mmWC	30	53	D	22		1	LIE-26	LIE- TYPE -B	
HNA30CP001	FG PRESS AT AH-A O/L	PT	FLUE GAS	-292	-477	mmWC	133	150	D	22		1	LIE-26	LIE- TYPE -B	
HFE30CT001	AH-A PA I/L TEMP	PRT-100	PY. AIR										LIE-26-JB	LIE- TYPE -B	Wiring shall be joined in LIE/LIR.For each PRT-100 sensor 15 Nos TBs shall be provided.
HFE30CT002	AH-A PA I/L TEMP	PRT-100	PY. AIR										LIE-26-JB	LIE- TYPE -B	Wiring shall be joined in LIE/LIR.For each PRT-100 sensor 15 Nos TBs shall be provided.
HFE30CT003	AH-A PA I/L TEMP	PRT-100	PY. AIR										LIE-26-JB	LIE- TYPE -B	Wiring shall be joined in LIE/LIR.For each PRT-100 sensor 15 Nos TBs shall be provided.
HLA20CT001	AH-A SEC AIR I/L TEMP	PRT-100	SEC. AIR										LIE-26-JB	LIE- TYPE -B	Wiring shall be joined in LIE/LIR.For each PRT-100 sensor 15 Nos TBs shall be provided.
HLA20CT002	AH-A SEC AIR I/L TEMP	PRT-100	SEC. AIR										LIE-26-JB	LIE- TYPE -B	Wiring shall be joined in LIE/LIR.For each PRT-100 sensor 15 Nos TBs shall be provided.
HLA20CT003	AH-A SEC AIR I/L TEMP	PRT-100	SEC. AIR										LIE-26-JB	LIE- TYPE -B	Wiring shall be joined in LIE/LIR.For each PRT-100 sensor 15 Nos TBs shall be provided.
HLA20CT004	AH-A SEC AIR I/L TEMP	PRT-100	SEC. AIR										LIE-26-JB	LIE- TYPE -B	Wiring shall be joined in LIE/LIR.For each PRT-100 sensor 15 Nos TBs shall be provided.
HNA30CQ001	AH-A FG O/L O_2 ANA	AT	FLUE GAS										LIE-26-JB	LIE- TYPE -B	
HNA30CT001	AH-A FG O/L TEMP	PRT-100	FLUE GAS										LIE-26-JB	LIE- TYPE -B	Wiring shall be joined in LIE/LIR.For each PRT-100 sensor 15 Nos TBs shall be provided.
HNA30CT002	AH-A FG O/L TEMP	PRT-100	FLUE GAS										LIE-26-JB	LIE- TYPE -B	Wiring shall be joined in LIE/LIR.For each PRT-100 sensor 15 Nos TBs shall be provided.
HNA30CT003	AH-A FG O/L TEMP	PRT-100	FLUE GAS										LIE-26-JB	LIE- TYPE -B	Wiring shall be joined in LIE/LIR.For each PRT-100 sensor 15 Nos TBs shall be provided.
HNA30CT004	AH-A FG O/L TEMP	PRT-100	FLUE GAS										LIE-26-JB	LIE- TYPE -B	Wiring shall be joined in LIE/LIR.For each PRT-100 sensor 15 Nos TBs shall be provided.
HFE35CP001	AH-B PY AIR I/L PRESS	PT	PY. AIR	1103	1395	mmWC	35	58	D	22	Yes	1	LIE-27	LIE- TYPE -B	
HLA25CP001	AH-B SEC AIR I/L PRESS	PT	SEC. AIR	254	371	mmWC	30	53	D	22		1	LIE-27	LIE- TYPE -B	
HNA35CP001	FG PRESS AT AH-B O/L	PT	FLUE GAS	-292	-477	mmWC	133	150	D	22		1	LIE-27	LIE- TYPE -B	
HFE35CT001	AH-B PA I/L TEMP	PRT-100	PY. AIR										LIE-27-JB	LIE- TYPE -B	Wiring shall be joined in LIE/LIR.For each PRT-100 sensor 15 Nos TBs shall be provided.
HFE35CT002	AH-B PA I/L TEMP	PRT-100	PY. AIR										LIE-27-JB	LIE- TYPE -B	Wiring shall be joined in LIE/LIR.For each PRT-100 sensor 15 Nos TBs shall be provided.
HFE35CT003	AH-B PA I/L TEMP	PRT-100	PY. AIR										LIE-27-JB	LIE- TYPE -B	Wiring shall be joined in LIE/LIR.For each PRT-100 sensor 15 Nos TBs shall be provided.
HLA25CT001	AH-B SEC AIR I/L TEMP	PRT-100	SEC. AIR										LIE-27-JB	LIE- TYPE -B	Wiring shall be joined in LIE/LIR.For each PRT-100 sensor 15 Nos TBs shall be provided.
HLA25CT002	AH-B SEC AIR I/L TEMP	PRT-100	SEC. AIR										LIE-27-JB	LIE- TYPE -B	Wiring shall be joined in LIE/LIR.For each PRT-100 sensor 15 Nos TBs shall be provided.
HLA25CT003	AH-B SEC AIR I/L TEMP	PRT-100	SEC. AIR										LIE-27-JB	LIE- TYPE -B	Wiring shall be joined in LIE/LIR.For each PRT-100 sensor 15 Nos TBs shall be provided.
HLA25CT004	AH-B SEC AIR I/L TEMP	PRT-100	SEC. AIR										LIE-27-JB	LIE- TYPE -B	Wiring shall be joined in LIE/LIR.For each PRT-100 sensor 15 Nos TBs shall be provided.
HNA35CQ001	AH-B FG O/L O_2 ANA	AT	FLUE GAS										LIE-27-JB	LIE- TYPE -B	
HNA35CT001	AH-B FG O/L TEMP	PRT-100	FLUE GAS										LIE-27-JB	LIE- TYPE -B	Wiring shall be joined in LIE/LIR.For each PRT-100 sensor 15 Nos TBs shall be provided.
HNA35CT002	AH-B FG O/L TEMP	PRT-100	FLUE GAS										LIE-27-JB	LIE- TYPE -B	Wiring shall be joined in LIE/LIR.For each PRT-100 sensor 15 Nos TBs shall be provided.
HNA35CT003	AH-B FG O/L TEMP	PRT-100	FLUE GAS										LIE-27-JB	LIE- TYPE -B	Wiring shall be joined in LIE/LIR.For each PRT-100 sensor 15 Nos TBs shall be provided.
HNA35CT004	AH-B FG O/L TEMP	PRT-100	FLUE GAS										LIE-27-JB	LIE- TYPE -B	Wiring shall be joined in LIE/LIR.For each PRT-100 sensor 15 Nos TBs shall be provided.
HFE30CP002	DP ACRS APH- A (PA)	DPT	PY. AIR	1103 / 1044	1395 / 1301	mmWC	35 / 326	58 / 400	D	24	Yes	2	LIE-28	LIE- TYPE -A	
HFE40CP002	AH-A PRI AIR O/L PRESS	PT	PY. AIR	1044	1301	mmWC	326	400	D	22		1	LIE-28	LIE- TYPE -A	
HLA20CP002	DP ACRS APH- A (SA)	DPT	SEC. AIR	254 / 181	371 / 262	mmWC	30 / 329	53 / 400	D	24		2	LIE-28	LIE- TYPE -A	

NOTE:FOR SHCEME NO 14 AND 16 -WHERE EVER DESIGN PRESSURE >=40KG/CM2-TWO DRAIN VALVES SHALL BE PROVIDED PER LINE.

KKS TAG	DESCRIPTION	INS TYPE	MEDIUM	OPR PRESS	DESIGN PRESS	UNIT PRESS	OPR TEMP (°C)	DESIGN TEMP (°C)	IP MATERIAL	SCHEME NO	AIR PURGING	CONT PURG	LIE/LIR	Type of LIE/LIR	Grouping Remarks
HLA30CP002	AH-A SEC AIR O/L PRESS	PT	SEC. AIR	181	262	mmWC	329	400	D	22		1	LIE-28	LIE- TYPE -A	
HNA27CP001	FG PRESS AT AH-A I/L	PT	FLUE GAS	-190	-313	mmWC	352	400	D	22		1	LIE-28	LIE- TYPE -A	
HNA27CP002	DP ACRS AH-A (FG)	DPT	FLUE GAS	-190 / -292	-313 / -477	mmWC	352 / 133	400 / 150	D	24		2	LIE-28	LIE- TYPE -A	
HNA27CQ001	AH-A FG I/L CO ANA	AT	FLUE GAS	-190 / -292	-313 / -477	mmWC	352 / 133	400 / 150					LIE-28-JB	LIE- TYPE -A	
HNA27CQ002	AH-A FG I/L O2 ANA	AT	FLUE GAS	-190 / -292	-313 / -477	mmWC	352 / 133	400 / 150					LIE-28-JB	LIE- TYPE -A	
HNA28CQ001	AH-B FG I/L CO ANA	AT	FLUE GAS	-190 / -292	-313 / -477	mmWC	352 / 133	400 / 150					LIE-28-JB	LIE- TYPE -A	
HNA28CQ002	AH-B FG I/L O2 ANA	AT	FLUE GAS	-190 / -292	-313 / -477	mmWC	352 / 133	400 / 150					LIE-28-JB	LIE- TYPE -A	
HHL10CF001	HOT SEC AIR FLOW - L	FT	SEC. AIR	147	169	mmWC	329	400	D	24	Yes	2	LIE-29	LIE- TYPE -B	
HHL10CF002	HOT SEC AIR FLOW - L	FT	SEC. AIR	147	169	mmWC	329	400	D	24		2	LIE-29	LIE- TYPE -B	
HHL10CF003	HOT SEC AIR FLOW - L	FT	SEC. AIR	147	169	mmWC	329	400	D	24		2	LIE-29	LIE- TYPE -B	
HHL20CP001	WIND BOX PRESS - L	PT	SEC. AIR	100	142	mmWC	329	400	D	22		1	LIE-29	LIE- TYPE -B	
HHL15CF001	HOT SEC AIR FLOW - R	FT	SEC. AIR	147	169	mmWC	329	400	D	24	Yes	2	LIE-30	LIE- TYPE -B	
HHL15CF002	HOT SEC AIR FLOW - R	FT	SEC. AIR	147	169	mmWC	329	400	D	24		2	LIE-30	LIE- TYPE -B	
HHL15CF003	HOT SEC AIR FLOW - R	FT	SEC. AIR	147	169	mmWC	329	400	D	24		2	LIE-30	LIE- TYPE -B	
HHL25CP001	WIND BOX PRESS - R	PT	SEC. AIR	100	142	mmWC	329	400	D	22		1	LIE-30	LIE- TYPE -B	
LAE71CF001	SH DSH-1 SIDE-A SPRAY WATER FLOW	FT	WATER	293	309.7	Kg/Cm²	310	496	E	8			LIE-31	LIE- TYPE -A	
LAE71CF002	SH DSH-1 SIDE-A SPRAY WATER FLOW	FT	WATER	293	309.7	Kg/Cm²	310	496	E	8			LIE-31	LIE- TYPE -A	
LAE72CF001	SH DSH-1 SIDE-B SPRAY WATER FLOW	FT	WATER	293	309.7	Kg/Cm²	310	496	E	8			LIE-31	LIE- TYPE -A	
LAE72CF002	SH DSH-1 SIDE-B SPRAY WATER FLOW	FT	WATER	293	309.7	Kg/Cm²	310	496	E	8			LIE-31	LIE- TYPE -A	
LAE91CF001	SH DSH-2 SIDE-A SPRAY WATER FLOW	FT	WATER	285.7	302	Kg/Cm²	310	533	E	8			LIE-31	LIE- TYPE -A	
LAE91CF002	SH DSH-2 SIDE-A SPRAY WATER FLOW	FT	WATER	285.7	302	Kg/Cm²	310	533	E	8			LIE-31	LIE- TYPE -A	
HHQ10CP001	DP ACRS SCANNER AIR FILTER	DPT	SCA. AIR	277	414	mmWC	30	53	D	24			LIE-32	LIE- TYPE -B	
HHQ20CP001	SCANNER AIR FAN O/L PRESS	PT	SCA. AIR	477	614	mmWC	30	53	D	22			LIE-32	LIE- TYPE -B	
HHQ20CP002	DP ACRS SCANNER AIR/FURN	DPT	SCA. AIR / FLUE GAS	477 / -5	614 / -10	mmWC	30 / 1199	53 / 1300	D	24	Yes	2	LIE-32	LIE- TYPE -B	
HJN01CP001	ATOMISING AIR HDR PRESS	PT	ATM AIR	6	7	Kg/Cm²	35		C	14			LIE-32	LIE- TYPE -B	
HBK20CP001	PLATEN SH O/L PRESS- L	PT	FLUE GAS	-8	-16	mmWC	993	1200	D	22	Yes	1	LIE-33	LIE- TYPE -B	
HBK30CP001	FINISH RH O/L PRESS- L	PT	FLUE GAS	-9	-17	mmWC	905	1100	D	22		1	LIE-33	LIE- TYPE -B	
HBK40CP001	FINISH SH O/L PRESS-L	PT	FLUE GAS	-17	-32	mmWC	685	900	D	22		1	LIE-33	LIE- TYPE -B	
HBK25CP001	PLATEN SH O/L PRESS- R	PT	FLUE GAS	-8	-16	mmWC	993	1200	D	22	Yes	1	LIE-34	LIE- TYPE -B	
HBK35CP001	FINISH RH O/L PRESS-R	PT	FLUE GAS	-9	-17	mmWC	905	1100	D	22		1	LIE-34	LIE- TYPE -B	
HBK45CP001	FINISH SH O/L PRESS-R	PT	FLUE GAS	-17	-32	mmWC	685	900	D	22		1	LIE-34	LIE- TYPE -B	
LCL30CF001	COND PUMP-A DISCH FLOW	FT	COND	1.1	7.03	Kg/Cm²	110	177	C	16			LIE-35	LIE- TYPE -B	
LCL30CF002	COND PUMP-B DISCH FLOW	FT	COND	1.1	7.03	Kg/Cm²	110	177	C	16			LIE-35	LIE- TYPE -B	
LCL30CF003	COND PUMP-A DISCH FLOW	FT	COND	1.1	7.03	Kg/Cm²	110	177	C	16			LIE-35	LIE- TYPE -B	
LCL30CF004	COND PUMP-B DISCH FLOW	FT	COND	1.1	7.03	Kg/Cm²	110	177	C	16			LIE-35	LIE- TYPE -B	
QHX25CP001	FD FAN-B SUC HDR PRESS	PT	DMCW	6	10	Kg/Cm²	39	60	F	18			LIE-36	LIE- TYPE -B	
QHX25CP002	FD FAN-B DISH HDR PRESS	PT	DMCW	6	10	Kg/Cm²	39	60	F	18			LIE-36	LIE- TYPE -B	
QHX26CP001	FD FAN-A SUC HDR PRESS	PT	DMCW	6	10	Kg/Cm²	39	60	F	18			LIE-36	LIE- TYPE -B	
QHX26CP002	FD FAN-A DISH HDR PRESS	PT	DMCW	6	10	Kg/Cm²	39	60	F	18			LIE-36	LIE- TYPE -B	
QHX25CT001	FD FAN-B SUC HDR TEMP	PRT-100	DMCW	6	10	Kg/Cm²	39	60					LIE-36-JB	LIE- TYPE -B	Wiring shall be joined in LIE/LIR.For each PRT-100 sensor 15 Nos TBs shall be provided.
QHX25CT002	FD FAN-B DISH HDR TEMP	PRT-100	DMCW	6	10	Kg/Cm²	39	60					LIE-36-JB	LIE- TYPE -B	Wiring shall be joined in LIE/LIR.For each PRT-100 sensor 15 Nos TBs shall be provided.
QHX26CT001	FD FAN-A SUC HDR TEMP	PRT-100	DMCW	6	10	Kg/Cm²	39	60					LIE-36-JB	LIE- TYPE -B	Wiring shall be joined in LIE/LIR.For each PRT-100 sensor 15 Nos TBs shall be provided.
QHX26CT002	FD FAN-A DISH HDR TEMP	PRT-100	DMCW	6	10	Kg/Cm²	39	60					LIE-36-JB	LIE- TYPE -B	Wiring shall be joined in LIE/LIR.For each PRT-100 sensor 15 Nos TBs shall be provided.
HAC10CF001	FEED WATER FLOW AT ECO I/L	FT	WATER	323.3	344.2	Kg/Cm²	309.7	347	B	12			LIE-37	LIE- TYPE -B	
HAC10CF002	FEED WATER FLOW AT ECO I/L	FT	WATER	323.3	344.2	Kg/Cm²	309.7	347	B	12			LIE-37	LIE- TYPE -B	
HAC10CF003	FEED WATER FLOW AT ECO I/L	FT	WATER	323.3	344.2	Kg/Cm²	309.7	347	B	12			LIE-37	LIE- TYPE -B	
HAC20CP001	ECO. O/L MIXING LINE PRESS	PT	WATER	316.4	343.4	Kg/Cm²	355	358	B	10			LIE-37	LIE- TYPE -B	
HAH01CP001	SEPERATOR 'A' OUTLET PRESS	PT	STEAM	303.9	324.7	Kg/Cm²	438	477	E	6			LIE-38	LIE- TYPE -B	
HAH01CP002	SEPERATOR 'A' OUTLET PRESS	PT	STEAM	303.9	324.7	Kg/Cm²	438	477	E	6			LIE-38	LIE- TYPE -B	
HAH02CP001	SEPERATOR 'B' OUTLET PRESS	PT	STEAM	303.9	324.7	Kg/Cm²	438	477	E	6			LIE-38	LIE- TYPE -B	
HAH02CP002	SEPERATOR 'B' OUTLET PRESS	PT	STEAM	303.9	324.7	Kg/Cm²	438	477	E	6			LIE-38	LIE- TYPE -B	
HFE35CP002	DP ACRS APH- B (PA)	DPT	PY. AIR	1103 / 1044	1395 / 1301	mmWC	35 / 326	58 / 400	D	24	Yes	2	LIE-39	LIE- TYPE -A	
HFE45CP002	AH-B PRI AIR O/L PRESS	PT	PY. AIR	1044	1301	mmWC	326	400	D	22		1	LIE-39	LIE- TYPE -A	
HLA25CP002	DP ACRS APH- B (SA)	DPT	SEC. AIR	254 / 181	371 / 262	mmWC	30 / 329	53 / 400	D	24		2	LIE-39	LIE- TYPE -A	
HLA35CP002	AH-B SEC AIR O/L PRESS	PT	SEC. AIR	181	262	mmWC	329	400	D	22		1	LIE-39	LIE- TYPE -A	
HNA28CP001	FG PRESS AT AH-B I/L	PT	FLUE GAS	-190	-313	mmWC	352	400	D	22		1	LIE-39	LIE- TYPE -A	
HNA28CP002	DP ACRS AH-B (FG)	DPT	FLUE GAS	-190 / -292	-313 / -477	mmWC	352 / 133	400 / 150	D	24		2	LIE-39	LIE- TYPE -A	
HAD81CL001	WTR SEPERATOR STRG TNK 'A' LVL	LT	WATER	305.1	326.9	Kg/Cm²	438	477	E	8			LIE-40	LIE- TYPE -A	
HAD81CL002	WTR SEPERATOR STRG TNK 'A' LVL	LT	WATER	305.1	326.9	Kg/Cm²	438	477	E	8			LIE-40	LIE- TYPE -A	
HAD81CL003	WTR SEPERATOR STRG TNK 'A' LVL	LT	WATER	305.1	326.9	Kg/Cm²	438	477	E	8			LIE-40	LIE- TYPE -A	
HAD81CP001	WTR SEPERATOR STRG TNK 'A' PRESS	PT	WATER	305.1	326.9	Kg/Cm²	438	477	E	6			LIE-40	LIE- TYPE -A	
HAG11CL001	SEPERATOR STORAGE TANK 'A' DOWNCOMER LEVEL	LT	WATER	305.1	326.9	Kg/Cm²	438	477	E	8			LIE-40	LIE- TYPE -A	
HAG15CP001	WATER STRG DOWNCOMER PRESS	PT	WATER	306.6	330.5	Kg/Cm²	346	374	B	10			LIE-40	LIE- TYPE -A	
HAD82CL001	WTR SEPERATOR STRG TNK 'B' LVL	LT	WATER	305.1	326.9	Kg/Cm²	438	477	E	8			LIE-41	LIE- TYPE -A	
HAD82CL002	WTR SEPERATOR STRG TNK 'B' LVL	LT	WATER	305.1	326.9	Kg/Cm²	438	477	E	8			LIE-41	LIE- TYPE -A	
HAD82CL003	WTR SEPERATOR STRG TNK 'B' LVL	LT	WATER	305.1	326.9	Kg/Cm²	438	477	E	8			LIE-41	LIE- TYPE -A	
HAD82CP001	WTR SEPERATOR STORAGE TANK 'B' PRESSURE	PT	WATER	305.1	326.9	Kg/Cm²	438	477	E	6			LIE-41	LIE- TYPE -A	
HAG12CL001	SEPERATOR STORAGE TANK 'B' DOWNCOMER LEVEL	LT	WATER	305.1	326.9	Kg/Cm²	438	477	E	8			LIE-41	LIE- TYPE -A	
LAE21CF001	RH DSH-A SPRAY WTR FLOW	FT	WATER	141	155.6	Kg/Cm²	188.9	191	B	12			LIE-42	LIE- TYPE -B	
LAE21CF002	RH DSH-A SPRAY WTR FLOW	FT	WATER	141	155.6	Kg/Cm²	188.9	191	B	12			LIE-42	LIE- TYPE -B	
LAE70CP001	SH DSH-1 SPRAY WTR PRESS AFTER COMM BLK VLV	PT	WATER	318.12	344.2	Kg/Cm²	310	496	E	6			LIE-42	LIE- TYPE -B	
LAE20CP001	RH/DSH SPRAY WTR PRESS AFTER COMM BLK VLV	PT	WATER	143	155.6	Kg/Cm²	188.9	191	B	10			LIE-43	LIE- TYPE -A	
LAE22CF001	RH DSH-B SPRAY WTR FLOW	FT	WATER	141	155.6	Kg/Cm²	188.9	191	B	12			LIE-43	LIE- TYPE -A	
LAE22CF002	RH DSH-B SPRAY WTR FLOW	FT	WATER	141	155.6	Kg/Cm²	188.9	191	B	12			LIE-43	LIE- TYPE -A	
LAE90CP001	SH DSH-2 SPRAY WTR PRESS AFTER COMM BLK VLV	PT	WATER	317.68	344.2	Kg/Cm²	310	347	E	6			LIE-43	LIE- TYPE -A	
LAE92CF001	SH DSH-2 SIDE-B SPRAY WATER FLOW	FT	WATER	285.7	302	Kg/Cm²	310	533	E	8			LIE-43	LIE- TYPE -A	

NOTE:FOR SHCEME NO 14 AND 16 -WHERE EVER DESIGN PRESSURE >=40KG/CM2-TWO DRAIN VALVES SHALL BE PROVIDED PER LINE.

KKS TAG	DESCRIPTION	INS TYPE	MEDIUM	OPR PRESS	DESIGN PRESS	UNIT PRESS	OPR TEMP (°C)	DESIGN TEMP (°C)	IP MATERIAL	SCHEME NO	AIR PURGING	CONT PURG	LIE/LIR	Type of LIE/LIR	Grouping Remarks
LAE92CF002	SH DSH-2 SIDE-B SPRAY WATER FLOW	FT	WATER	285.7	302	Kg/Cm²	310	533	E	8			LIE-43	LIE- TYPE -A	
HAG15CP002	DP ACRS MIXING SPHERE ,F-57	DPT	WATER	323.7	350.1	Kg/Cm²	309.7	348	B	12			LIE-44	LIE- TYPE -B	
HAG25CP001	DP ACROSS BWCP	DPT	WATER	163.9	350.1	Kg/Cm²	309.7	348	B	12			LIE-44	LIE- TYPE -B	
HAG25CP002	DP ACROSS BWCP	DPT	WATER	163.9	350.1	Kg/Cm²	309.7	348	B	12			LIE-44	LIE- TYPE -B	
HAG25CP003	DP ACROSS BWCP	DPT	WATER	163.9	350.1	Kg/Cm²	309.7	348	B	12			LIE-44	LIE- TYPE -B	
HBK50CP001	LTRH O/L (ECO I/L) PRESS -L	PT	FLUE GAS	-49	-79	mmWC	495	700	D	22	Yes	1	LIE-45	LIE- TYPE -C	
HNA15CP001	ECO O/L PRESS - L	PT	FLUE GAS	-102	-170	mmWC	352	400	D	22		1	LIE-45	LIE- TYPE -C	
HBK55CP001	LTRH O/L (ECO I/L) PRESS -R	PT	FLUE GAS	-49	-79	mmWC	495	700	D	22	Yes	1	LIE-46	LIE- TYPE -C	
HNA25CP001	ECO O/L PRESS - R	PT	FLUE GAS	-102	-170	mmWC	352	400	D	22		1	LIE-46	LIE- TYPE -C	
QFA10CP001	INST AIR HDR PRESS AT BLR TP	PT	IA	8	10	Kg/Cm²	39	50	C	14			LIE-47	LIE- TYPE -A	
QFA10CP002	INST AIR HDR PRESS AT BLR TP	PT	IA	8	10	Kg/Cm²	39	50	C	14			LIE-47	LIE- TYPE -A	
QFA10CP003	INST AIR HDR PRESS AT BLR TP	PT	IA	8	10	Kg/Cm²	39	50	C	14			LIE-47	LIE- TYPE -A	
QFA10CP004	INST AIR HDR PRESS AT BLR TP	PT	IA	8	10	Kg/Cm²	39	50	C	14			LIE-47	LIE- TYPE -A	
QFB11CP001	SERVICE AIR PRESS AT BLR TP	PT	SA	8	10	Kg/Cm²	39	50	C	14			LIE-47	LIE- TYPE -A	
QFB11CP002	SERVICE AIR PRESS AT BLR TP	PT	SA	8	10	Kg/Cm²	39	50	C	14			LIE-47	LIE- TYPE -A	
LBG80CP001	AUX STM TO MILL INERT PRESS	PT	STEAM	16	20	Kg/Cm²	290	350	C	14			LIE-49	LIE- TYPE -C	
SGA51CP002	FIRE WTR HDR PRESS FOR MILL E TO H	PT	WATER	6	10	Kg/Cm²	36	80	C	14			LIE-49	LIE- TYPE -C	
SDA11CP001	APH FIRE FIGHT LINE PRESS	PT	WATER	6	17.2	Kg/Cm²	36	80	C	14			LIE-50	LIE- TYPE -C	
SGA11CP001	APH WATER WASH LINE PRESS	PT	WATER	6	17.2	Kg/Cm²	36	80	C	14			LIE-50	LIE- TYPE -C	
LBG70CP001	AUX STM TO SCAPH PRESS	PT	STEAM	16	20	Kg/Cm²	290	350	C	14			LIE-51	LIE- TYPE -C	
LBG70CT001	AUX STM TO SCAPH TEMP	PRT-100	STEAM										LIE-51-JB	LIE- TYPE -C	Wiring shall be joined in LIE/LIR.For each PRT-100 sensor 15 Nos TBs shall be provided.
QHX20CP002	FILL PUMP COMMON HEADER DISCHARGE PRESSURE	PT	DMCW	6	10	Kg/Cm²	39	60	F	18			LIE-52	LIE- TYPE -B	
QHX20CP003	ECW TANK FILL PUMP-A DISCH PRESS-1	PT	DMCW	6	10	Kg/Cm²	39	60	F	18			LIE-52	LIE- TYPE -B	
QHX20CP004	ECW TANK FILL PUMP-B DISCH PRESS	PT	DMCW	6	10	Kg/Cm²	39	60	F	18			LIE-52	LIE- TYPE -B	
HJF73CT001	DRN OIL PMP I/L TEMP	PRT-100	HFO										LIE-52-JB	LIE- TYPE -B	Wiring shall be joined in LIE/LIR.For each PRT-100 sensor 15 Nos TBs shall be provided.
HAH03CP001	WTR SEPERATOR 'C' O/L PRESS	PT	STEAM	303.9	324.7	Kg/Cm²	438	477	E	6			LIE-53	LIE- TYPE -B	
HAH03CP002	WTR SEPERATOR 'C' O/L PRESS	PT	STEAM	303.9	324.7	Kg/Cm²	438	477	E	6			LIE-53	LIE- TYPE -B	
HAH04CP001	WTR SEPERATOR 'D' O/L PRESS	PT	STEAM	303.9	324.7	Kg/Cm²	438	477	E	6			LIE-53	LIE- TYPE -B	
HAH04CP002	WTR SEPERATOR 'D' O/L PRESS	PT	STEAM	303.9	324.7	Kg/Cm²	438	477	E	6			LIE-53	LIE- TYPE -B	
LBG80CP002	AUX STM TO MILL INERT PRESS	PT	STEAM	16	20	Kg/Cm²	290	350	C	14			LIE-54	LIE- TYPE -B	
QSV10CP011	DP ACRS DIRTY OIL TRF PMP SUC STRNR	DPT	OIL	1.5	3.5	Kg/Cm²	50	70	C	16			LIE-54	LIE- TYPE -B	
QSV20CP011	DP ACRS CLEAN OIL TRF PMP SUC STRNR	DPT	OIL	1.5	3.5	Kg/Cm²	50	70	C	16			LIE-54	LIE- TYPE -B	
SGA51CP001	FIRE WTR HDR PRESS FOR MILL A TO D	PT	WATER	6	10	Kg/Cm²	36	80	C	14			LIE-54	LIE- TYPE -B	
HJM01CP001	ATOMISING STM HDR PRESS	PT	ATM STM	7.5	13	Kg/Cm²	210		C	14			LIE-55	LIE- TYPE -B	
HJM01CP002	ATOMISING STM HDR PRESS	PT	ATM STM	7.5	13	Kg/Cm²	210		C	14			LIE-55	LIE- TYPE -B	
HJM01CP003	ATOMISING STM HDR PRESS	PT	ATM STM	7.5	13	Kg/Cm²	210		C	14			LIE-55	LIE- TYPE -B	
QHX22CP001	PRESSURE AT TRI-SECTOR AH-A COMMON I/L	PT	DMCW	6	10	Kg/Cm²	39	60	F	18			LIE-56	LIE- TYPE -B	
QHX22CP002	PRESSURE AT TRI-SECTOR AH-A GUIDE BEARING OUTLET	PT	DMCW	6	10	Kg/Cm²	39	60	F	18			LIE-56	LIE- TYPE -B	
QHX22CP003	PRESSURE AT TRI-SECTOR AH-A SUPPORT BEARING OUTLET	PT	DMCW	6	10	Kg/Cm²	39	60	F	18			LIE-56	LIE- TYPE -B	
QHX22CP004	PRESSURE AT TRI-SECTOR AH-A OIL CARRY OVER PROBE OUTLET	PT	DMCW	6	10	Kg/Cm²	39	60	F	18			LIE-56	LIE- TYPE -B	
QHX21CP001	PRESSURE AT TRI-SECTOR AH-B COMMON I/L	PT	DMCW	6	10	Kg/Cm²	39	60	F	18			LIE-57	LIE- TYPE -B	
QHX21CP002	PRESSURE AT TRI-SECTOR AH-B GUIDE BEARING OUTLET	PT	DMCW	6	10	Kg/Cm²	39	60	F	18			LIE-57	LIE- TYPE -B	
QHX21CP003	PRESSURE AT TRI-SECTOR AH-B SUPPORT BEARING OUTLET	PT	DMCW	6	10	Kg/Cm²	39	60	F	18			LIE-57	LIE- TYPE -B	
QHX21CP004	PRESSURE AT TRI-SECTOR AH-B OIL CARRY OVER PROBE OUTLET	PT	DMCW	6	10	Kg/Cm²	39	60	F	18			LIE-57	LIE- TYPE -B	
QHX30CP001	PRESSURE AT MILL A COMMON O/L	PT	DMCW	6	10	Kg/Cm²	39	60	F	18			LIE-58	LIE- TYPE -B	
QHX31CP001	PRESSURE AT MILL B COMMON O/L	PT	DMCW	6	10	Kg/Cm²	39	60	F	18			LIE-58	LIE- TYPE -B	
QHX32CP001	PRESSURE AT MILL C COMMON O/L	PT	DMCW	6	10	Kg/Cm²	39	60	F	18			LIE-58	LIE- TYPE -B	
QHX33CP001	PRESSURE AT MILL D COMMON O/L	PT	DMCW	6	10	Kg/Cm²	39	60	F	18			LIE-58	LIE- TYPE -B	
QHX30CT001	TEMPERATURE AT MILL A COMMON O/L	PRT-100	DMCW	6	10	Kg/Cm²	39	60					LIE-58-JB	LIE- TYPE -B	Wiring shall be joined in LIE/LIR.For each PRT-100 sensor 15 Nos TBs shall be provided.
QHX31CT001	TEMPERATURE AT MILL B COMMON O/L	PRT-100	DMCW	6	10	Kg/Cm²	39	60					LIE-58-JB	LIE- TYPE -B	Wiring shall be joined in LIE/LIR.For each PRT-100 sensor 15 Nos TBs shall be provided.
QHX32CT001	TEMPERATURE AT MILL C COMMON O/L	PRT-100	DMCW	6	10	Kg/Cm²	39	60					LIE-58-JB	LIE- TYPE -B	Wiring shall be joined in LIE/LIR.For each PRT-100 sensor 15 Nos TBs shall be provided.
QHX33CT001	TEMPERATURE AT MILL D COMMON O/L	PRT-100	DMCW	6	10	Kg/Cm²	39	60					LIE-58-JB	LIE- TYPE -B	Wiring shall be joined in LIE/LIR.For each PRT-100 sensor 15 Nos TBs shall be provided.
QHX34CP001	PRESSURE AT MILL E COMMON O/L	PT	DMCW	6	10	Kg/Cm²	39	60	F	18			LIE-59	LIE- TYPE -B	
QHX35CP001	PRESSURE AT MILL F COMMON O/L	PT	DMCW	6	10	Kg/Cm²	39	60	F	18			LIE-59	LIE- TYPE -B	
QHX36CP001	PRESSURE AT MILL G COMMON O/L	PT	DMCW	6	10	Kg/Cm²	39	60	F	18			LIE-59	LIE- TYPE -B	
QHX37CP001	PRESSURE AT MILL H COMMON O/L	PT	DMCW	6	10	Kg/Cm²	39	60	F	18			LIE-59	LIE- TYPE -B	
QHX34CT001	TEMPERATURE AT MILL E COMMON O/L	PRT-100	DMCW	6	10	Kg/Cm²	39	60					LIE-59-JB	LIE- TYPE -B	Wiring shall be joined in LIE/LIR.For each PRT-100 sensor 15 Nos TBs shall be provided.
QHX35CT001	TEMPERATURE AT MILL F COMMON O/L	PRT-100	DMCW	6	10	Kg/Cm²	39	60					LIE-59-JB	LIE- TYPE -B	Wiring shall be joined in LIE/LIR.For each PRT-100 sensor 15 Nos TBs shall be provided.
QHX36CT001	TEMPERATURE AT MILL G COMMON O/L	PRT-100	DMCW	6	10	Kg/Cm²	39	60					LIE-59-JB	LIE- TYPE -B	Wiring shall be joined in LIE/LIR.For each PRT-100 sensor 15 Nos TBs shall be provided.
QHX37CT001	TEMPERATURE AT MILL H COMMON O/L	PRT-100	DMCW	6	10	Kg/Cm²	39	60					LIE-59-JB	LIE- TYPE -B	Wiring shall be joined in LIE/LIR.For each PRT-100 sensor 15 Nos TBs shall be provided.
MAA50CP011	1ST STG TURBINE PRESS	PT	STEAM	279		Kg/Cm²	603		A	2			LIR-01	LIR- TYPE -B	
MAA50CP012	1ST STG TURBINE PRESS	PT	STEAM	279		Kg/Cm²	603		A	2			LIR-01	LIR- TYPE -B	
MAA50CP013	1ST STG TURBINE PRESS	PT	STEAM	279		Kg/Cm²	603		A	2			LIR-01	LIR- TYPE -B	
LBF10CF011	HPBP-1 STM FLOW	FT	STEAM	278	294.8	Kg/Cm²	596	601	A	4			LIR-02	LIR- TYPE -A	
LBF10CF012	HPBP-1 STM FLOW	FT	STEAM	278	294.8	Kg/Cm²	596	601	A	4			LIR-02	LIR- TYPE -A	
LBF10CF013	HPBP-1 STM FLOW	FT	STEAM	278	294.8	Kg/Cm²	596	601	A	4			LIR-02	LIR- TYPE -A	
LBF20CF011	HPBP-2 STM FLOW	FT	STEAM	278	294.8	Kg/Cm²	596	601	A	4			LIR-02	LIR- TYPE -A	
LBF20CF012	HPBP-2 STM FLOW	FT	STEAM	278	294.8	Kg/Cm²	596	601	A	4			LIR-02	LIR- TYPE -A	
LBF20CF013	HPBP-2 STM FLOW	FT	STEAM	278	294.8	Kg/Cm²	596	601	A	4			LIR-02	LIR- TYPE -A	
LAE31CP011	SPRY WTR PRESS FRM BFP DISCH	PT	STEAM	298.32	355	Kg/Cm²	142	200	B	10			LIR-02-JB	LIR- TYPE -A	
LAA01CP011	DEAERATOR PRESS	PT	STEAM	11.95	15.5	Kg/Cm²	186.9	210	C	14			LIR-03	LIR- TYPE -A	
LAA01CP012	DEAERATOR PRESS	PT	STEAM	11.95	15.5	Kg/Cm²	186.9	210	C	14			LIR-03	LIR- TYPE -A	
LAA01CP013	DEAERATOR PRESS	PT	STEAM	11.95	15.5	Kg/Cm²	186.9	210	C	14			LIR-03	LIR- TYPE -A	
LBS60CF011	EXT STM FLOW TO DEA	FT	STEAM	13.22	15	Kg/Cm²	358.9	375	C	16			LIR-03	LIR- TYPE -A	
LBS60CF012	EXT STM FLOW TO DEA	FT	STEAM	13.22	15	Kg/Cm²	358.9	375	C	16			LIR-03	LIR- TYPE -A	
LBS60CP011	EXT STM PRESS TO DEA	PT	STEAM	13.22	15	Kg/Cm²	358.9	375	C	14			LIR-03	LIR- TYPE -A	

NOTE:FOR SHCEME NO 14 AND 16 -WHERE EVER DESIGN PRESSURE >=40KG/CM2-TWO DRAIN VALVES SHALL BE PROVIDED PER LINE.

KKS TAG	DESCRIPTION	INS TYPE	MEDIUM	OPR PRESS	DESIGN PRESS	UNIT PRESS	OPR TEMP (°C)	DESIGN TEMP (°C)	IP MATERIAL	SCHEME NO	AIR PURGING	CONT PURG	LIE/LIR	Type of LIE/LIR	Grouping Remarks
LBQ10CP011	CRH STM TO DEA PRESS BEF CV	PT	STEAM	37.89	74.2	Kg/Cm²	344	370	C	14			LIR-03-JB	LIR- TYPE -A	
LAB64CP011	FW PRESS BEF HPH-7A DES HTR	PT	FW	332.78	355	Kg/Cm²	306.6	315	B	10			LIR-04	LIR- TYPE -A	
LAB65CP011	FW PRESS AFT HPH-7A DES HTR	PT	FW	332.78	355	Kg/Cm²	310	315	B	10			LIR-04	LIR- TYPE -A	
LAD71CL011	LEVEL - 7A DESUPERHEATER	LT	STEAM	30	30	Kg/Cm²	505	505	B	12			LIR-04	LIR- TYPE -A	
LAD71CL012	LEVEL - 7A DESUPERHEATER	LT	STEAM	30	30	Kg/Cm²	505	505	B	12			LIR-04	LIR- TYPE -A	
LAD71CL013	LEVEL - 7A DESUPERHEATER	LT	STEAM	30	30	Kg/Cm²	505	505	B	12			LIR-04	LIR- TYPE -A	
LBQ71CP011	EXT PRESS FRM IPT TO HPH-7A DES HTR	PT	STEAM	27.23	32	Kg/Cm²	464.3	475	E	6			LIR-04	LIR- TYPE -A	
LBS30CP011	EXT STM PRESS AT LPH-3 I/L	PT	STEAM	1.46	3.5	Kg/Cm²	120.6	130	C	14			LIR-05	LIR- TYPE -B	
LBS40CP011	EXT STM PRESS AT LPH-4 I/L	PT	STEAM	3.27	3.5	Kg/Cm²	194.6	210	C	14			LIR-05	LIR- TYPE -B	
LBS50CP011	EXT STM PRESS AT LPH-5 I/L	PT	STEAM	5.77	7	Kg/Cm²	256.4	270	C	14			LIR-05	LIR- TYPE -B	
LBS30CT011	EXT STM TEMP AT LPH-3 I/L	PRT-100	STEAM										LIR-05-JB	LIR- TYPE -B	Wiring shall be joined in LIE/LIR.For each PRT-100 sensor 15 Nos TBs shall be provided.
LBS30CT011A	EXT STM TEMP AT LPH-3 I/L (SHELL TEMP)	PRT-100	STEAM										LIR-05-JB	LIR- TYPE -B	Wiring shall be joined in LIE/LIR.For each PRT-100 sensor 15 Nos TBs shall be provided.
LBS40CT011	EXT STM TEMP AT LPH-4 I/L	PRT-100	STEAM										LIR-05-JB	LIR- TYPE -B	Wiring shall be joined in LIE/LIR.For each PRT-100 sensor 15 Nos TBs shall be provided.
LBS40CT011A	EXT STM TEMP AT LPH-4 I/L (SHELL TEMP)	PRT-100	STEAM										LIR-05-JB	LIR- TYPE -B	Wiring shall be joined in LIE/LIR.For each PRT-100 sensor 15 Nos TBs shall be provided.
LCA70CT011	LPH-3 I/L COND TEMP	PRT-100	COND										LIR-05-JB	LIR- TYPE -B	Wiring shall be joined in LIE/LIR.For each PRT-100 sensor 15 Nos TBs shall be provided.
LCA80CT011	LPH-3 O/L COND TEMP	PRT-100	COND										LIR-05-JB	LIR- TYPE -B	Wiring shall be joined in LIE/LIR.For each PRT-100 sensor 15 Nos TBs shall be provided.
LCA80CT012	LPH-4 I/L COND TEMP	PRT-100	COND										LIR-05-JB	LIR- TYPE -B	Wiring shall be joined in LIE/LIR.For each PRT-100 sensor 15 Nos TBs shall be provided.
LCA90CT011	LPH-5 I/L COND TEMP	PRT-100	COND										LIR-05-JB	LIR- TYPE -B	Wiring shall be joined in LIE/LIR.For each PRT-100 sensor 15 Nos TBs shall be provided.
LCA95CT012	LPH-5 O/L COND TEMP	PRT-100	COND										LIR-05-JB	LIR- TYPE -B	Wiring shall be joined in LIE/LIR.For each PRT-100 sensor 15 Nos TBs shall be provided.
LAD11CL011	HPH-7A LVL	LT	COND	30	30	Kg/Cm²	235	235	C	16			LIR-06	LIR- TYPE -A	
LAD11CL012	HPH-7A LVL	LT	COND	30	30	Kg/Cm²	235	235	C	16			LIR-06	LIR- TYPE -A	
LAD12CL011	HPH-7A LVL	LT	COND	30	30	Kg/Cm²	235	235	C	16			LIR-06	LIR- TYPE -A	
LAD21CL011	HPH-7B LVL	LT	COND	30	30	Kg/Cm²	235	235	C	16			LIR-06	LIR- TYPE -A	
LAD21CL012	HPH-7B LVL	LT	COND	30	30	Kg/Cm²	235	235	C	16			LIR-06	LIR- TYPE -A	
LAB61CT011	FW TEMP AT HPH-7A I/L	PRT-100	FW	332.78	355	Kg/Cm²	195.1	200					LIR-06-JB	LIR- TYPE -A	Wiring shall be joined in LIE/LIR.For each PRT-100 sensor 15 Nos TBs shall be provided.
LAB71CT011	FW TEMP AT HPH-7B I/L	PRT-100	FW	332.78	355	Kg/Cm²	195.1	200					LIR-06-JB	LIR- TYPE -A	Wiring shall be joined in LIE/LIR.For each PRT-100 sensor 15 Nos TBs shall be provided.
LAD31CL011	HPH-8A LVL	LT	COND	75	75	Kg/Cm²	291	291	C	16			LIR-07	LIR- TYPE -A	
LAD31CL012	HPH-8A LVL	LT	COND	75	75	Kg/Cm²	291	291	C	16			LIR-07	LIR- TYPE -A	
LAD32CL011	HPH-8A LVL	LT	COND	75	75	Kg/Cm²	291	291	C	16			LIR-07	LIR- TYPE -A	
LAD51CL011	HPH-9A LVL	LT	COND	103	103	Kg/Cm²	313	313	B	12			LIR-07	LIR- TYPE -A	
LAD51CL012	HPH-9A LVL	LT	COND	103	103	Kg/Cm²	313	313	B	12			LIR-07	LIR- TYPE -A	
LAD52CL011	HPH-9A LVL	LT	COND	103	103	Kg/Cm²	313	313	B	12			LIR-07	LIR- TYPE -A	
LAD41CL011	HPH-8B LVL	LT	COND	75	75	Kg/Cm²	291	291	C	16			LIR-08	LIR- TYPE -A	
LAD41CL012	HPH-8B LVL	LT	COND	75	75	Kg/Cm²	291	291	C	16			LIR-08	LIR- TYPE -A	
LAD42CL011	HPH-8B LVL	LT	COND	75	75	Kg/Cm²	291	291	C	16			LIR-08	LIR- TYPE -A	
LAD61CL011	HPH-9B LVL	LT	COND	103	103	Kg/Cm²	313	313	B	12			LIR-08	LIR- TYPE -A	
LAD61CL012	HPH-9B LVL	LT	COND	103	103	Kg/Cm²	313	313	B	12			LIR-08	LIR- TYPE -A	
LAD62CL011	HPH-9B LVL	LT	COND	103	103	Kg/Cm²	313	313	B	12			LIR-08	LIR- TYPE -A	
LAB61CP011	FW PRESS AT HPH-7A I/L	PT	FW	332.78	355	Kg/Cm²	195.1	200	B	10			LIR-09	LIR- TYPE -B	
LAB71CP011	FW PRESS AT HPH-7B I/L	PT	FW	332.78	355	Kg/Cm²	195.1	200	B	10			LIR-09	LIR- TYPE -B	
LAD22CL011	HPH-7B LVL	LT	COND	30	30	Kg/Cm²	235	235	C	16			LIR-09	LIR- TYPE -B	
LAB10CF011	TDBFP-A SUCTION FLOW	FT	FW	28.1	40	Kg/Cm²	186.9	200	C	16			LIR-10	LIR- TYPE -A	
LAB10CF012	TDBFP-A SUCTION FLOW	FT	FW	28.1	40	Kg/Cm²	186.9	200	C	16			LIR-10	LIR- TYPE -A	
LAB10CF013	TDBFP-A SUCTION FLOW	FT	FW	28.1	40	Kg/Cm²	186.9	200	C	16			LIR-10	LIR- TYPE -A	
LAB10CP011	TDBFP-A BP SUC PRESS	PT	FW	12.61	20	Kg/Cm²	188.8	200	C	14			LIR-10	LIR- TYPE -A	
LBS53CF011	EXT STM FLOW TO BFPT-A	FT	STEAM	13.22	20	Kg/Cm²	358.9	375	C	16			LIR-10	LIR- TYPE -A	
PGK20CP001	DIFF. PRESSURE ACROSS CW LINES --BFPDT-A	DPT	CW	1	10	Kg/Cm²	45		C	16			LIR-101	LIR- TYPE -B	
XAV12CP001	DIFF. PRESSURE ACROSS GOVERNING OIL FILTER HIGH -BFPDT-A	DPT	OIL	0.5	2	Kg/Cm²	47		C	16			LIR-101	LIR- TYPE -B	
XAV30CP001	DIFF. PRESSURE ACROSS LUBE OIL FILTER HIGH -BFPDT-A	DPT	OIL	0.5	2	Kg/Cm²	47		C	16			LIR-101	LIR- TYPE -B	
XAV45CP003	DIFF. PRESSURE ACROSS E.O.P FILTER HIGH -BFPDT-A	DPT	OIL	0.5	2	Kg/Cm²	60		C	16			LIR-101	LIR- TYPE -B	
PGK20CZ105	LUBE OIL TCV PGK20AA101 POSITION TRANSMITTER	ZT	OIL										LIR-101-JB	LIR- TYPE -B	Wiring shall be joined in LIE/LIR.
PGK20CY101	LUBE OIL TCV PGK20AA101 E/P SMART POSITIONER	ZT	OIL										LIR-101-JB	LIR- TYPE -B	Wiring shall be joined in LIE/LIR.
XAV10CP004	LUBE OIL PUMP DISCHARGE HDR PRESSURE-BFPDT-A	PT	OIL	10.6	20	Kg/Cm²	60		C	14			LIR-102	LIR- TYPE -B	
XAV10CP005	LUBE OIL PUMP DISCHARGE HDR PRESSURE-BFPDT-A	PT	OIL	10.6	20	Kg/Cm²	60		C	14			LIR-102	LIR- TYPE -B	
XAV45CP001	EOP DISCHARGE PRESSURE-BFPDT-A	PT	OIL	4.5	10	Kg/Cm²	60		C	14			LIR-102	LIR- TYPE -B	
XAV70CP001	DIFF. PRESSURE ACROSS JOP SUCTION STRAINER-BFPDT-A	DPT	OIL	0.01	1	Kg/Cm²	45		C	16			LIR-102	LIR- TYPE -B	
XAV10CL001	L.O Tank Level	LT-Remote	OIL										LIR-102-JB	LIR- TYPE -B	Wiring shall be joined in LIE/LIR.
XAV10CL002	L.O Tank Level	LT-Remote	OIL										LIR-102-JB	LIR- TYPE -B	Wiring shall be joined in LIE/LIR.
XAV50CP001	LUBE OIL HEADER PRESSURE-BFPDT-A	PT	OIL	2.5	10	Kg/Cm²	47		C	14			LIR-103	LIR- TYPE -A	
XAV50CP002	LUBE OIL HEADER PRESSURE-BFPDT-A	PT	OIL	2.5	10	Kg/Cm²	47		C	14			LIR-103	LIR- TYPE -A	
XAV50CP003	LUBE OIL HEADER PRESSURE -BFPDT-A	PT	OIL	2.5	10	Kg/Cm²	47		C	14			LIR-103	LIR- TYPE -A	
XAV50CP101	LUBE OIL HEADER PRESSURE VERY LOW -BFPDT-A	PS	OIL	2.5	10	Kg/Cm²	47		C	14			LIR-103	LIR- TYPE -A	
XAV80CP001	JACKING OIL HEADER PRESSURE -BFPDT-A	PT	OIL	85		Kg/Cm²	45		B	10			LIR-103	LIR- TYPE -A	
XAV80CP002	JACKING OIL HEADER PRESSURE -BFPDT-A	PT	OIL	85		Kg/Cm²	45		B	10			LIR-103	LIR- TYPE -A	
XAV50CZ101	TURNING GEAR VALVE POSITION TRANSMITTER	ZT	OIL										LIR-103-JB	LIR- TYPE -A	Wiring shall be joined in LIE/LIR.
MTA01CP001	WHEEL CHAMBER PRESSURE-BFPDT-A	PT	STM	6.16	10	Kg/Cm²	309		C	14			LIR-104	LIR- TYPE -A	
XAX43CP001	CONTROL OIL HEADER PRESSURE -BFPDT-A	PT	OIL	7.5	10	Kg/Cm²	45		C	14			LIR-104	LIR- TYPE -A	
XAX43CP002	CONTROL OIL HEADER PRESSURE-BFPDT-A	PT	OIL	7.5	10	Kg/Cm²	45		C	14			LIR-104	LIR- TYPE -A	
XAX43CP003	CONTROL OIL HEADER PRESSURE-BFPDT-A	PT	OIL	7.5	10	Kg/Cm²	45		C	14			LIR-104	LIR- TYPE -A	
XAX43CP004	TRIP OIL PRESSURE-BFPDT-A	PT	OIL	7.5	10	Kg/Cm²	45		C	14			LIR-104	LIR- TYPE -A	
XAX43CP005	TRIP OIL PRESSURE-BFPDT-A	PT	OIL	7.5	10	Kg/Cm²	45		C	14			LIR-104	LIR- TYPE -A	
XAW60CP001	DIFFERENTIAL PRESSURE ACROSS GLAND STEAM INLET STRAINER-BFPDT-A	DPT	STM	15	20	Kg/Cm²	290		C	16			LIR-104-JB	LIR- TYPE -A	
XAX43CP007	START UP OIL PRESSURE -BFPDT-A	PT	OIL	6	10	Kg/Cm²	45		C	14			LIR-105	LIR- TYPE -A	
XAX43CP008	START UP OIL PRESSURE -BFPDT-A	PT	OIL	6	10	Kg/Cm²	45		C	14			LIR-105	LIR- TYPE -A	
XAX43CP009	TRIP OIL PRESSURE -BFPDT-A	PT	OIL	6	10	Kg/Cm²	45		C	14			LIR-105	LIR- TYPE -A	
XAX43CP010	TRIP OIL PRESSURE -BFPDT-A	PT	OIL	6	10	Kg/Cm²	45		C	14			LIR-105	LIR- TYPE -A	

NOTE:FOR SHCEME NO 14 AND 16 -WHERE EVER DESIGN PRESSURE >=40KG/CM2-TWO DRAIN VALVES SHALL BE PROVIDED PER LINE.

KKS TAG	DESCRIPTION	INS TYPE	MEDIUM	OPR PRESS	DESIGN PRESS	UNIT PRESS	OPR TEMP (°C)	DESIGN TEMP (°C)	IP MATERIAL	SCHEME NO	AIR PURGING	CONT PURG	LIE/LIR	Type of LIE/LIR	Grouping Remarks
XAX43CP011	SECONDARY OIL PRESSURE -BFPDT-A	PT	OIL	4.5	10	Kg/Cm²	45		C	14			LIR-105	LIR- TYPE -A	
XAX43CP012	SECONDARY OIL PRESSURE -BFPDT-A	PT	OIL	4.5	10	Kg/Cm²	45		C	14			LIR-105	LIR- TYPE -A	
XAX43CZ013	GOVERNING VALVE POSITION	ZT	OIL										LIR-105-JB	LIR- TYPE -A	
XAX43CP028	DP ACROSS CONTROL OIL FILTER-BFPDT-A	DPT	OIL	0.5	1	Kg/Cm²	45		C	16			LIR-105-JB	LIR- TYPE -A	
LBS53CP002	LIVE STEAM PRESSURE-BFPDT-A	PT	STM	11.26	20	Kg/Cm²	366		C	14			LIR-106	LIR- TYPE -B	
LBS53CP003	LIVE STEAM PRESSURE-BFPDT-A	PT	STM	11.26	20	Kg/Cm²	366		C	14			LIR-106	LIR- TYPE -B	
LBS53CP004	LIVE STEAM PRESSURE-BFPDT-A	PT	STM	11.26	20	Kg/Cm²	366		C	14			LIR-106	LIR- TYPE -B	
LBS55CP001	TURBINE EXHAUST PRESSURE-BFPDT-A	PT	STM	-0.77	1	Kg/Cm²	62.3		C	14			LIR-107	LIR- TYPE -B	
LBS55CP002	TURBINE EXHAUST PRESSURE-BFPDT-A	PT	STM	-0.77	1	Kg/Cm²	62.3		C	14			LIR-107	LIR- TYPE -B	
LBS55CP003	TURBINE EXHAUST PRESSURE-BFPDT-A	PT	STM	-0.77	1	Kg/Cm²	62.3		C	14			LIR-107	LIR- TYPE -B	
XAW60CP002	AUXILIARY STEAM TO GLAND STEAM PRESSURE-BFPDT-A	PT	STM	15	20	Kg/Cm²	290		C	14			LIR-108	LIR- TYPE -B	
XAW70CP001	GLAND STEAM HEADER PRESSURE-BFPDT-A	PT	STM	0.043	1	Kg/Cm²	302		C	14			LIR-108	LIR- TYPE -B	
XAW70CP002	GLAND STEAM HEADER PRESSURE-BFPDT-A	PT	STM	0.043	1	Kg/Cm²	302		C	14			LIR-108	LIR- TYPE -B	
XAW70CP003	GLAND STEAM HEADER PRESSURE-BFPDT-A	PT	STM	0.043	1	Kg/Cm²	302		C	14			LIR-108	LIR- TYPE -B	
MTA01CP002	BALANCE LINE PRESSURE -BFPDT-A	PT	STM	1.15	5	Kg/Cm²	179		C	14			LIR-109	LIR- TYPE -C	
LAB10CT011	TDBFP-A BP SUC TEMP	PRT-100	FW	12.61	20	Kg/Cm²	188.8	200					LIR-10-JB	LIR- TYPE -A	Wiring shall be joined in LIE/LIR.For each PRT-100 sensor 15 Nos TBs shall be provided.
LAB10CT012	TDBFP-A BP SUC TEMP	PRT-100	FW	12.61	20	Kg/Cm²	188.8	200					LIR-10-JB	LIR- TYPE -A	Wiring shall be joined in LIE/LIR.For each PRT-100 sensor 15 Nos TBs shall be provided.
LAB10CT013	TDBFP-A BP DISCH TEMP	PRT-100	FW	12.61	20	Kg/Cm²	188.8	200					LIR-10-JB	LIR- TYPE -A	Wiring shall be joined in LIE/LIR.For each PRT-100 sensor 15 Nos TBs shall be provided.
LAB10CT014	TDBFP-A DISCH TEMP	PRT-100	FW	12.61	20	Kg/Cm²	188.8	200					LIR-10-JB	LIR- TYPE -A	Wiring shall be joined in LIE/LIR.For each PRT-100 sensor 15 Nos TBs shall be provided.
LAB20CF011	TDBFP-B SUCTION FLOW	FT	FW	28.1	40	Kg/Cm²	186.9	200	C	16			LIR-11	LIR- TYPE -A	
LAB20CF012	TDBFP-B SUCTION FLOW	FT	FW	28.1	40	Kg/Cm²	186.9	200	C	16			LIR-11	LIR- TYPE -A	
LAB20CF013	TDBFP-B SUCTION FLOW	FT	FW	28.1	40	Kg/Cm²	186.9	200	C	16			LIR-11	LIR- TYPE -A	
LAB20CP011	TDBFP BP-B SUC PRESS	PT	FW	12.61	20	Kg/Cm²	188.8	200	C	14			LIR-11	LIR- TYPE -A	
LBC10CP011	CRH STM HDR PRESS AFT NRV	PT	STEAM	65.44	74.2	Kg/Cm²	365.8	370	C	14			LIR-11	LIR- TYPE -A	
LBS54CF011	EXT STM FLOW TO BFPT-B	FT	STEAM	13.22	20	Kg/Cm²	358.9	375	C	16			LIR-11	LIR- TYPE -A	
PGK21CP001	DIFF. PRESSURE ACROSS CW LINES --BFPDT-B	DPT	CW	1	2	Kg/Cm²	45		C	16			LIR-110	LIR- TYPE -B	
XAV13CP001	DIFF. PRESSURE ACROSS GOVERNING OIL FILTER HIGH -BFPDT-B	DPT	OIL	0.5	1	Kg/Cm²	47		C	16			LIR-110	LIR- TYPE -B	
XAV31CP001	DIFF. PRESSURE ACROSS LUBE OIL FILTER HIGH -BFPDT-B	DPT	OIL	0.5	1	Kg/Cm²	47		C	16			LIR-110	LIR- TYPE -B	
XAV46CP003	DIFF. PRESSURE ACROSS E.O.P FILTER HIGH -BFPDT-B	DPT	OIL	0.5	1	Kg/Cm²	60		C	16			LIR-110	LIR- TYPE -B	
XAV11CP004	LUBE OIL PUMP DISCHARGE HDR PRESSURE-BFPDT-B	PT	OIL	10.6	20	Kg/Cm²	60		C	14			LIR-111	LIR- TYPE -B	
XAV11CP005	LUBE OIL PUMP DISCHARGE HDR PRESSURE-BFPDT-B	PT	OIL	10.6	20	Kg/Cm²	60		C	14			LIR-111	LIR- TYPE -B	
XAV46CP001	EOP DISCHARGE PRESSURE-BFPDT-B	PT	OIL	4.5	10	Kg/Cm²	60		C	14			LIR-111	LIR- TYPE -B	
XAV71CP001	DIFF. PRESSURE ACROSS JOP SUCTION STRAINER-BFPDT-B	DPT	OIL	0.01	1	Kg/Cm²	45		C	16			LIR-111	LIR- TYPE -B	
XAV51CP001	LUBE OIL HEADER PRESSURE-BFPDT-B	PT	OIL	2.5	5	Kg/Cm²	47		C	14			LIR-112	LIR- TYPE -A	
XAV51CP002	LUBE OIL HEADER PRESSURE-BFPDT-B	PT	OIL	2.5	5	Kg/Cm²	47		C	14			LIR-112	LIR- TYPE -A	
XAV51CP003	LUBE OIL HEADER PRESSURE -BFPDT-B	PT	OIL	2.5	5	Kg/Cm²	47		C	14			LIR-112	LIR- TYPE -A	
XAV51CP101	LUBE OIL HEADER PRESSURE VERY LOW -BFPDT-B	PS	OIL	2.5	5	Kg/Cm²	47		C	14			LIR-112	LIR- TYPE -A	
XAV81CP001	JACKING OIL HEADER PRESSURE -BFPDT-B	PT	OIL	85		Kg/Cm²	45		B	10			LIR-112	LIR- TYPE -A	
XAV81CP002	JACKING OIL HEADER PRESSURE -BFPDT-B	PT	OIL	85		Kg/Cm²	45		B	10			LIR-112	LIR- TYPE -A	
MTA02CP001	WHEEL CHAMBER PRESSURE-BFPDT-B	PT	STM	6.16	10	Kg/Cm²	309		C	14			LIR-113	LIR- TYPE -A	
XAX44CP001	CONTROL OIL HEADER PRESSURE -BFPDT-B	PT	OIL	7.5	10	Kg/Cm²	45		C	14			LIR-113	LIR- TYPE -A	
XAX44CP002	CONTROL OIL HEADER PRESSURE-BFPDT-B	PT	OIL	7.5	10	Kg/Cm²	45		C	14			LIR-113	LIR- TYPE -A	
XAX44CP003	CONTROL OIL HEADER PRESSURE-BFPDT-B	PT	OIL	7.5	10	Kg/Cm²	45		C	14			LIR-113	LIR- TYPE -A	
XAX44CP004	TRIP OIL PRESSURE-BFPDT-B	PT	OIL	7.5	10	Kg/Cm²	45		C	14			LIR-113	LIR- TYPE -A	
XAX44CP005	TRIP OIL PRESSURE-BFPDT-B	PT	OIL	7.5	10	Kg/Cm²	45		C	14			LIR-113	LIR- TYPE -A	
XAW61CP001	DIFFERENTIAL PRESSURE ACROSS GLAND STEAM INLET STRAINER-BFPDT-B	DPT	STM	15	20	Kg/Cm²	290		C	16			LIR-113-JB	LIR- TYPE -A	
XAX44CP007	START UP OIL PRESSURE -BFPDT-B	PT	OIL	6	10	Kg/Cm²	45		C	14			LIR-114	LIR- TYPE -A	
XAX44CP008	START UP OIL PRESSURE -BFPDT-B	PT	OIL	6	10	Kg/Cm²	45		C	14			LIR-114	LIR- TYPE -A	
XAX44CP009	TRIP OIL PRESSURE -BFPDT-B	PT	OIL	6	10	Kg/Cm²	45		C	14			LIR-114	LIR- TYPE -A	
XAX44CP010	TRIP OIL PRESSURE -BFPDT-B	PT	OIL	6	10	Kg/Cm²	45		C	14			LIR-114	LIR- TYPE -A	
XAX44CP011	SECONDARY OIL PRESSURE -BFPDT-B	PT	OIL	4.5	10	Kg/Cm²	45		C	14			LIR-114	LIR- TYPE -A	
XAX44CP012	SECONDARY OIL PRESSURE -BFPDT-B	PT	OIL	4.5	10	Kg/Cm²	45		C	14			LIR-114	LIR- TYPE -A	
XAX44CP028	DP ACROSS CONTROL OIL FILTER-BFPDT-B	DPT	OIL	0.5	1	Kg/Cm²	45		C	16			LIR-114-JB	LIR- TYPE -A	
LBS54CF011	BFPDT MAIN STEAM FLOW-BFPDT-B	FT	STM	11.26	20	Kg/Cm²	366		C	16			LIR-115	LIR- TYPE -B	
LBS54CP004	LIVE STEAM PRESSURE-BFPDT-B	PT	STM	11.26	20	Kg/Cm²	366		C	14			LIR-115	LIR- TYPE -B	
LBS55CP002	LIVE STEAM PRESSURE-BFPDT-B	PT	STM	11.26	20	Kg/Cm²	366		C	14			LIR-115	LIR- TYPE -B	
LBS55CP003	LIVE STEAM PRESSURE-BFPDT-B	PT	STM	11.26	20	Kg/Cm²	366		C	14			LIR-115	LIR- TYPE -B	
LBS54CP001	TURBINE EXHAUST PRESSURE-BFPDT-B	PT	STM	-0.77	1	Kg/Cm²	62.3		C	14			LIR-116	LIR- TYPE -B	
LBS56CP002	TURBINE EXHAUST PRESSURE-BFPDT-B	PT	STM	-0.77	1	Kg/Cm²	62.3		C	14			LIR-116	LIR- TYPE -B	
LBS56CP003	TURBINE EXHAUST PRESSURE-BFPDT-B	PT	STM	-0.77	1	Kg/Cm²	62.3		C	14			LIR-116	LIR- TYPE -B	
XAW61CP002	AUXILIARY STEAM TO GLAND STEAM PRESSURE-BFPDT-B	PT	STM	15	20	Kg/Cm²	290		C	14			LIR-117	LIR- TYPE -B	
XAW71CP001	GLAND STEAM HEADER PRESSURE-BFPDT-B	PT	STM	0.043	1	Kg/Cm²	302		C	14			LIR-117	LIR- TYPE -B	
XAW71CP002	GLAND STEAM HEADER PRESSURE-BFPDT-B	PT	STM	0.043	1	Kg/Cm²	302		C	14			LIR-117	LIR- TYPE -B	
XAW71CP003	GLAND STEAM HEADER PRESSURE-BFPDT-B	PT	STM	0.043	1	Kg/Cm²	302		C	14			LIR-117	LIR- TYPE -B	
LBS53CP011	CRH STEAM PRESSURE-BFPDT-B	PT	STM	17	20	Kg/Cm²	330		C	14			LIR-118	LIR- TYPE -B	
LBS53CP012	CRH STEAM PRESSURE-BFPDT-B	PT	STM	17	20	Kg/Cm²	330		C	14			LIR-118	LIR- TYPE -B	
LBS53CP013	CRH STEAM PRESSURE-BFPDT-B	PT	STM	17	20	Kg/Cm²	330		C	14			LIR-118	LIR- TYPE -B	
MTA02CP002	BALANCE LINE PRESSURE -BFPDT-B	PT	STM	1.15	5	Kg/Cm²	179		C	14			LIR-118	LIR- TYPE -B	
LAB20CT011	TDBFP BP-B SUC TEMP	PRT-100	FW	12.61	20	Kg/Cm²	188.8	200					LIR-11-JB	LIR- TYPE -A	Wiring shall be joined in LIE/LIR.For each PRT-100 sensor 15 Nos TBs shall be provided.
LAB20CT012	TDBFP BP-B SUC TEMP	PRT-100	FW	12.61	20	Kg/Cm²	188.8	200					LIR-11-JB	LIR- TYPE -A	Wiring shall be joined in LIE/LIR.For each PRT-100 sensor 15 Nos TBs shall be provided.
LAB20CT013	TDBFP-B BP DISCH TEMP	PRT-100	FW	12.61	20	Kg/Cm²	188.8	200					LIR-11-JB	LIR- TYPE -A	Wiring shall be joined in LIE/LIR.For each PRT-100 sensor 15 Nos TBs shall be provided.
LAB20CT014	TDBFP-B DISCH TEMP	PRT-100	FW	12.61	20	Kg/Cm²	188.8	200					LIR-11-JB	LIR- TYPE -A	Wiring shall be joined in LIE/LIR.For each PRT-100 sensor 15 Nos TBs shall be provided.
LAB30CF011	MDBFP-C SUC FLOW	FT	FW	30.5	40	Kg/Cm²	186.9	200	C	16			LIR-12	LIR- TYPE -A	
LAB30CF012	MDBFP-C SUC FLOW	FT	FW	30.5	40	Kg/Cm²	186.9	200	C	16			LIR-12	LIR- TYPE -A	
LAB30CF013	MDBFP-C SUC FLOW	FT	FW	30.5	40	Kg/Cm²	186.9	200	C	16			LIR-12	LIR- TYPE -A	
LAB30CP011	MDBFP BP-C SUC PRESS	PT	FW	12.61	20	Kg/Cm²	188.8	200	C	14			LIR-12	LIR- TYPE -A	

NOTE:FOR SHCEME NO 14 AND 16 -WHERE EVER DESIGN PRESSURE >=40KG/CM2-TWO DRAIN VALVES SHALL BE PROVIDED PER LINE.

KKS TAG	DESCRIPTION	INS TYPE	MEDIUM	OPR PRESS	DESIGN PRESS	UNIT PRESS	OPR TEMP (°C)	DESIGN TEMP (°C)	IP MATERIAL	SCHEME NO	AIR PURGING	CONT PURG	LIE/LIR	Type of LIE/LIR	Grouping Remarks
PGL30CP011	DMCW MDBFP MTR & HC WO CLR HDR PRESS	PT	DMCW	5.1	10	Kg/Cm²	3.9	60	F	18			LIR-12	LIR- TYPE -A	
LAB30CT011	MDBFP-C BP SUC TEMP	PRT-100	FW	12.61	20	Kg/Cm²	188.8	200					LIR-12-JB	LIR- TYPE -A	Wiring shall be joined in LIE/LIR.For each PRT-100 sensor 15 Nos TBs shall be provided.
LAB30CT012	MDBFP-C BP SUC TEMP	PRT-100	FW	12.61	20	Kg/Cm²	188.8	200					LIR-12-JB	LIR- TYPE -A	Wiring shall be joined in LIE/LIR.For each PRT-100 sensor 15 Nos TBs shall be provided.
LAB30CT013	MDBFP-C BP DISCH TEMP	PRT-100	FW	12.61	20	Kg/Cm²	188.8	200					LIR-12-JB	LIR- TYPE -A	Wiring shall be joined in LIE/LIR.For each PRT-100 sensor 15 Nos TBs shall be provided.
LAB30CT014	MDBFP-C DISCH TEMP	PRT-100	FW	12.61	20	Kg/Cm²	188.8	200					LIR-12-JB	LIR- TYPE -A	Wiring shall be joined in LIE/LIR.For each PRT-100 sensor 15 Nos TBs shall be provided.
LAB50CP011	BFP DISCH HDR PRESS	PT	FW	332.78	355	Kg/Cm²	195.1	200	B	10			LIR-13	LIR- TYPE -A	
LAB50CP012	DP ACRSS FCS	DPT	FW	332.78	510	Kg/Cm²	195.1	200	E	8			LIR-13	LIR- TYPE -A	
LAB50CP013	DP ACRSS FCS	DPT	FW	332.78	510	Kg/Cm²	195.1	200	E	8			LIR-13	LIR- TYPE -A	
LAB50CP016	BFP DISCH HDR PRESS AFT FCS	PT	FW	332.78	355	Kg/Cm²	195.1	200	B	10			LIR-13	LIR- TYPE -A	
LAB50CP017	BFP DISCH HDR PRESS AFT FCS	PT	FW	332.78	355	Kg/Cm²	195.1	200	B	10			LIR-13	LIR- TYPE -A	
LAB50CP018	BFP DISCH HDR PRESS AFT FCS	PT	FW	332.78	355	Kg/Cm²	195.1	200	B	10			LIR-13	LIR- TYPE -A	
LAB50CT011	BFP DISCH HDR TEMP	PRT-100	FW	332.78	355	Kg/Cm²	195.1	200					LIR-13-JB	LIR- TYPE -A	Wiring shall be joined in LIE/LIR.For each PRT-100 sensor 15 Nos TBs shall be provided.
LAB50CT014	BFP DISCH HDR TEMP AFT FCS	PRT-100	FW	332.78	355	Kg/Cm²	195.1	200					LIR-13-JB	LIR- TYPE -A	Wiring shall be joined in LIE/LIR.For each PRT-100 sensor 15 Nos TBs shall be provided.
LAB50CT015	BFP DISCH HDR TEMP AFT FCS	PRT-100	FW	332.78	355	Kg/Cm²	195.1	200					LIR-13-JB	LIR- TYPE -A	Wiring shall be joined in LIE/LIR.For each PRT-100 sensor 15 Nos TBs shall be provided.
LAB50CT016	BFP DISCH HDR TEMP AFT FCS	PRT-100	FW	332.78	355	Kg/Cm²	195.1	200					LIR-13-JB	LIR- TYPE -A	Wiring shall be joined in LIE/LIR.For each PRT-100 sensor 15 Nos TBs shall be provided.
LAB80CF011	FW FLOW TO ECO	FT	FW	316.2	355	Kg/Cm²	305.1	320	B	12			LIR-14	LIR- TYPE -B	
LAB80CF012	FW FLOW TO ECO	FT	FW	316.2	355	Kg/Cm²	305.1	320	B	12			LIR-14	LIR- TYPE -B	
LAB80CF013	FW FLOW TO ECO	FT	FW	316.2	355	Kg/Cm²	305.1	320	B	12			LIR-14	LIR- TYPE -B	
LAB80CP011	FW PRESS TO ECO	PT	FW	332.78	355	Kg/Cm²	310	320	B	10			LIR-14	LIR- TYPE -B	
QFA40CP011	IA PRESS TO FGD AREA	PT	IA	8	10	Kg/Cm²	39	50	C	14			LIR-15	LIR- TYPE -C	
QFB40CP011	SA PRESS TO FGD AREA	PT	SA	8	10	Kg/Cm²	39	50	C	14			LIR-15	LIR- TYPE -C	
LAB72CP011	FW PRESS AT HPH-8B I/L	PT	FW	332.78	355	Kg/Cm²	226.9	230	B	10			LIR-16	LIR- TYPE -B	
LAB73CP011	FW PRESS AT HPH-9B I/L	PT	FW	332.78	355	Kg/Cm²	280.5	290	B	10			LIR-16	LIR- TYPE -B	
LBQ82CP011	EXT STM PRESS AT HPH-8B I/L	PT	STEAM	63.36	74.2	Kg/Cm²	364.9	370	C	14			LIR-16	LIR- TYPE -B	
LBQ92CP011	EXT STM PRESS AT HPH-9B I/L	PT	STEAM	95.53	110	Kg/Cm²	421.8	430	E	6			LIR-16	LIR- TYPE -B	
LAA01CL011	DEA TNK LVL	LT	COND	30.62	47	Kg/Cm²	154.3	160	C	16			LIR-17	LIR- TYPE -A	
LAA01CL012	DEA TNK LVL	LT	COND	30.62	47	Kg/Cm²	154.3	160	C	16			LIR-17	LIR- TYPE -A	
LAA01CL013	DEA TNK LVL	LT	COND	30.62	47	Kg/Cm²	154.3	160	C	16			LIR-17	LIR- TYPE -A	
LAA02CL011	DEA TNK LVL	LT	COND	30.62	47	Kg/Cm²	154.3	160	C	16			LIR-17	LIR- TYPE -A	
LAA02CL012	DEA TNK LVL	LT	COND	30.62	47	Kg/Cm²	154.3	160	C	16			LIR-17	LIR- TYPE -A	
LAA02CL013	DEA TNK LVL	LT	COND	30.62	47	Kg/Cm²	154.3	160	C	16			LIR-17	LIR- TYPE -A	
LAA01CT011	DEA TEMP	PRT-100	COND	30.62	47	Kg/Cm²	154.3	160					LIR-17-JB	LIR- TYPE -A	Wiring shall be joined in LIE/LIR.For each PRT-100 sensor 15 Nos TBs shall be provided.
LAA01CT012	DEA TEMP	PRT-100	COND	30.62	47	Kg/Cm²	154.3	160					LIR-17-JB	LIR- TYPE -A	Wiring shall be joined in LIE/LIR.For each PRT-100 sensor 15 Nos TBs shall be provided.
DRV10CP013	DP ACRS STRNR AT DRIP PMP-A I/L	DPT	COND	1.5	3.5	Kg/Cm²	108.9	115	C	16			LIR-18	LIR- TYPE -A	
DRV20CP013	DP ACRS STRNR AT DRIP PMP-B I/L	DPT	COND	1.5	3.5	Kg/Cm²	108.9	115	C	16			LIR-18	LIR- TYPE -A	
LCA01CF011	CEP-A DISCH FLOW	FT	COND	30.62	47	Kg/Cm²	42.6	60	C	16			LIR-18	LIR- TYPE -A	
LCA01CF012	CEP-A DISCH FLOW	FT	COND	30.62	47	Kg/Cm²	42.6	60	C	16			LIR-18	LIR- TYPE -A	
LCA01CF013	CEP-A DISCH FLOW	FT	COND	30.62	47	Kg/Cm²	42.6	60	C	16			LIR-18	LIR- TYPE -A	
LCA83CP011	DRIP PMP DISCH HDR PRESS	PT	COND	24.71	47	Kg/Cm²	108.9	115	C	14			LIR-18	LIR- TYPE -A	
LCA02CF011	CEP-B DISCH FLOW	FT	COND	30.62	47	Kg/Cm²	42.6	60	C	16			LIR-19	LIR- TYPE -A	
LCA02CF012	CEP-B DISCH FLOW	FT	COND	30.62	47	Kg/Cm²	42.6	60	C	16			LIR-19	LIR- TYPE -A	
LCA02CF013	CEP-B DISCH FLOW	FT	COND	30.62	47	Kg/Cm²	42.6	60	C	16			LIR-19	LIR- TYPE -A	
LCA03CF011	CEP-C DISCH FLOW	FT	COND	30.62	47	Kg/Cm²	42.6	60	C	16			LIR-19	LIR- TYPE -A	
LCA03CF012	CEP-C DISCH FLOW	FT	COND	30.62	47	Kg/Cm²	42.6	60	C	16			LIR-19	LIR- TYPE -A	
LCA03CF013	CEP-C DISCH FLOW	FT	COND	30.62	47	Kg/Cm²	42.6	60	C	16			LIR-19	LIR- TYPE -A	
PGL41CT011	DMCW TEMP AT CEP-A BRG O/L	PRT-100	COND	30.62	47	Kg/Cm²	42.6	60					LIR-19-JB	LIR- TYPE -A	Wiring shall be joined in LIE/LIR.For each PRT-100 sensor 15 Nos TBs shall be provided.
PGL42CT011	DMCW TEMP AT CEP-B BRG O/L	PRT-100	COND	30.62	47	Kg/Cm²	42.6	60					LIR-19-JB	LIR- TYPE -A	Wiring shall be joined in LIE/LIR.For each PRT-100 sensor 15 Nos TBs shall be provided.
PGL43CT011	DMCW TEMP AT CEP-C BRG O/L	PRT-100	COND	30.62	47	Kg/Cm²	42.6	60					LIR-19-JB	LIR- TYPE -A	Wiring shall be joined in LIE/LIR.For each PRT-100 sensor 15 Nos TBs shall be provided.
LCA20CF011	COND FLOW AT GSC O/L	FT	COND	30.62	47	Kg/Cm²	43.1	60	C	16			LIR-20	LIR- TYPE -A	
LCA20CF012	COND FLOW AT GSC O/L	FT	COND	30.62	47	Kg/Cm²	43.1	60	C	16			LIR-20	LIR- TYPE -A	
LCA20CF013	COND FLOW AT GSC O/L	FT	COND	30.62	47	Kg/Cm²	43.1	60	C	16			LIR-20	LIR- TYPE -A	
LCA20CP011	CEP DISCH HDR PRESS	PT	COND	30.62	47	Kg/Cm²	42.6	60	C	14			LIR-20	LIR- TYPE -A	
LCA20CP012	CEP DISCH HDR PRESS	PT	COND	30.62	47	Kg/Cm²	42.6	60	C	14			LIR-20	LIR- TYPE -A	
LCA00CT011	COND DISCH HDR TEMP	PRT-100	COND	30.62	47	Kg/Cm²	42.6	60					LIR-20-JB	LIR- TYPE -A	Wiring shall be joined in LIE/LIR.For each PRT-100 sensor 15 Nos TBs shall be provided.
LCA20CT011	GSC I/L COND TEMP	PRT-100	COND	30.62	47	Kg/Cm²	42.6	60					LIR-20-JB	LIR- TYPE -A	Wiring shall be joined in LIE/LIR.For each PRT-100 sensor 15 Nos TBs shall be provided.
LCA20CT012	GSC O/L COND TEMP	PRT-100	COND	30.62	47	Kg/Cm²	42.6	60					LIR-20-JB	LIR- TYPE -A	Wiring shall be joined in LIE/LIR.For each PRT-100 sensor 15 Nos TBs shall be provided.
LCA50CT011	COND TEMP AT CPU O/L	PRT-100	COND	30.62	47	Kg/Cm²	42.6	60					LIR-20-JB	LIR- TYPE -A	Wiring shall be joined in LIE/LIR.For each PRT-100 sensor 15 Nos TBs shall be provided.
LCA60CP011	DRAIN CLR I/L PRESS	PT	COND	30.62	47	Kg/Cm²	43.1	60	C	14			LIR-21	LIR- TYPE -C	
LCA61CP011	DRAIN CLR O/L PRESS	PT	COND	30.62	47	Kg/Cm²	43.1	60	C	14			LIR-21	LIR- TYPE -C	
LCA60CT011	DRAIN CLR I/L TEMP	PRT-100	COND	30.62	47	Kg/Cm²	43.1	60					LIR-21-JB	LIR- TYPE -C	Wiring shall be joined in LIE/LIR.For each PRT-100 sensor 15 Nos TBs shall be provided.
LCA95CF011	COND FLOW TO DEA	FT	COND	30.62	47	Kg/Cm²	154.3	160	C	16			LIR-22	LIR- TYPE -B	
LCA95CF012	COND FLOW TO DEA	FT	COND	30.62	47	Kg/Cm²	154.3	160	C	16			LIR-22	LIR- TYPE -B	
LCA95CF013	COND FLOW TO DEA	FT	COND	30.62	47	Kg/Cm²	154.3	160	C	16			LIR-22	LIR- TYPE -B	
LCA40CF011	COND FLOW TO EXCESS RET TO CST	FT	COND	33.3	47	Kg/Cm²	43	60	C	16			LIR-23	LIR- TYPE -C	
MAG11CL011	HOTWELL-1 LVL-L	LT-Rad	COND	33.3	47	Kg/Cm²	43	60					LIR-23-JB	LIR- TYPE -C	
MAG12CL012	HOTWELL-1 LVL-R	LT-Rad	COND	33.3	47	Kg/Cm²	43	60					LIR-23-JB	LIR- TYPE -C	
MAG12CL013	HOTWELL-1 LVL-R	LT-Rad	COND	33.3	47	Kg/Cm²	43	60					LIR-23-JB	LIR- TYPE -C	
MAG21CL011	HOTWELL-2 LVL-R	LT-Rad	COND	33.3	47	Kg/Cm²	43	60					LIR-23-JB	LIR- TYPE -C	
MAG22CL012	HOTWELL-2 LVL-R	LT-Rad	COND	33.3	47	Kg/Cm²	43	60					LIR-23-JB	LIR- TYPE -C	
MAG22CL013	HOTWELL-2 LVL-L	LT-Rad	COND	33.3	47	Kg/Cm²	43	60					LIR-23-JB	LIR- TYPE -C	
LCA33CP011	VAC GLAND SEAL COND PRESS	PT	COND	3.5	47	Kg/Cm²	60	60	C	14			LIR-25	LIR- TYPE -C	
LCA33CP012	VAC GLAND SEAL COND PRESS	PT	COND	3.5	47	Kg/Cm²	60	60	C	14			LIR-25	LIR- TYPE -C	
LAB62CP011	FW PRESS AT HPH-8A I/L	PT	FW	332.78	355	Kg/Cm²	226.9	230	B	10			LIR-26	LIR- TYPE -B	
LAB63CP011	FW PRESS AT HPH-9A I/L	PT	FW	332.78	355	Kg/Cm²	280.5	290	B	10			LIR-26	LIR- TYPE -B	
LBQ81CP011	EXT STM PRESS AT HPH-8A I/L	PT	STEAM	63.36	74.2	Kg/Cm²	364.9	370	C	14			LIR-26	LIR- TYPE -B	
LBQ91CP011	EXT STM PRESS AT HPH-9A I/L	PT	STEAM	95.53	110	Kg/Cm²	421.8	430	E	6			LIR-26	LIR- TYPE -B	

NOTE:FOR SHCEME NO 14 AND 16 -WHERE EVER DESIGN PRESSURE >=40KG/CM2-TWO DRAIN VALVES SHALL BE PROVIDED PER LINE.

KKS TAG	DESCRIPTION	INS TYPE	MEDIUM	OPR PRESS	DESIGN PRESS	UNIT PRESS	OPR TEMP (°C)	DESIGN TEMP (°C)	IP MATERIAL	SCHEME NO	AIR PURGING	CONT PURG	LIE/LIR	Type of LIE/LIR	Grouping Remarks
LBG10CF011	MS FLOW TO APRDS	FT	STEAM	270	294.8	Kg/Cm²	593	601	A	4			LIR-27	LIR- TYPE -A	
LBG10CF012	MS FLOW TO APRDS	FT	STEAM	270	294.8	Kg/Cm²	593	601	A	4			LIR-27	LIR- TYPE -A	
LBG10CF013	MS FLOW TO APRDS	FT	STEAM	270	294.8	Kg/Cm²	593	601	A	4			LIR-27	LIR- TYPE -A	
LBG10CP011	MS PRESS TO APRDS	PT	STEAM	270	294.8	Kg/Cm²	593	601	A	2			LIR-27	LIR- TYPE -A	
LBG20CF011	CRH STM FLOW TO APRDS	FT	STEAM	65.44	74.2	Kg/Cm²	365.8	370	C	16			LIR-27	LIR- TYPE -A	
LBG20CF012	CRH STM FLOW TO APRDS	FT	STEAM	65.44	74.2	Kg/Cm²	365.8	370	C	16			LIR-27	LIR- TYPE -A	
LBG20CP011	CRH STM PRESS TO APRDS	PT	STEAM	65.44	74.2	Kg/Cm²	365.8	370	C	14			LIR-27-JB	LIR- TYPE -A	
LBG30CP013	AUX STM HDR PRESS	PT	STEAM	16	20	Kg/Cm²	290	350	C	14			LIR-28	LIR- TYPE -A	
LBG30CP014	AUX STM HDR PRESS	PT	STEAM	16	20	Kg/Cm²	290	350	C	14			LIR-28	LIR- TYPE -A	
LBG30CP015	AUX STM HDR PRESS	PT	STEAM	16	20	Kg/Cm²	290	350	C	14			LIR-28	LIR- TYPE -A	
LCR20CP011	CYCLE M/U PUMPs DISCH HDR PRESS	PT	DM WTR	7	10	Kg/Cm²	40	50	F	18			LIR-29	LIR- TYPE -A	
LCR20CP012	CYCLE M/U PUMPs DISCH HDR PRESS	PT	DM WTR	7	10	Kg/Cm²	40	50	F	18			LIR-29	LIR- TYPE -A	
LCR70CP011	BLR FILL PMP HDR PRESS	PT	DM WTR	15	25	Kg/Cm²	40	50	F	18			LIR-29	LIR- TYPE -A	
LCP01CL011	CS TNK-1 LVL	LT-RDR	DM WTR	15	25	Kg/Cm²	40	50					LIR-29 JB	LIR- TYPE -A	
LCP01CL012	CS TNK-1 LVL	LT-RDR	DM WTR	15	25	Kg/Cm²	40	50					LIR-29 JB	LIR- TYPE -A	
LBS52CP011	CRH STEAM PRESSURE-BFPDT-A	PT	STEAM	33.02	74.2	Kg/Cm²	370	370	C	14			LIR-30	LIR- TYPE -B	
LBS52CP012	CRH STEAM PRESSURE-BFPDT-A	PT	STEAM	33.02	74.2	Kg/Cm²	370	370	C	14			LIR-30	LIR- TYPE -B	
LBS52CP013	CRH STEAM PRESSURE-BFPDT-A	PT	STEAM	33.02	74.2	Kg/Cm²	370	370	C	14			LIR-30	LIR- TYPE -B	
QFA10CP011	INST AIR HDR PRESS AT ROW-A	PT	IA	8	10	Kg/Cm²	39	50	C	14			LIR-31	LIR- TYPE -C	
QFB10CP011	SA HDR PRESS AT ROW A	PT	SA	8	10	Kg/Cm²	39	50	C	14			LIR-31	LIR- TYPE -C	
QFA20CP011	INST AIR HDR PRESS AT ROW-B	PT	IA	8	10	Kg/Cm²	39	50	C	14			LIR-32	LIR- TYPE -C	
QFB20CP011	SA HDR PRESS AT ROW B	PT	SA	8	10	Kg/Cm²	39	50	C	14			LIR-32	LIR- TYPE -C	
PAB01CP011	CWP-A DISCH PRESS	PT	CW	3.2	5.5	Kg/Cm²	33	60	C	14			LIR-33	LIR- TYPE -A	
PAB01CP012	CWP-A DISCH PRESS	PT	CW	3.2	5.5	Kg/Cm²	33	60	C	14			LIR-33	LIR- TYPE -A	
PAB01CP013	CWP-A DISCH PRESS	PT	CW	3.2	5.5	Kg/Cm²	33	60	C	14			LIR-33	LIR- TYPE -A	
PAB02CP011	CWP-B DISCH PRESS	PT	CW	3.2	5.5	Kg/Cm²	33	60	C	14			LIR-33	LIR- TYPE -A	
PAB02CP012	CWP-B DISCH PRESS	PT	CW	3.2	5.5	Kg/Cm²	33	60	C	14			LIR-33	LIR- TYPE -A	
PAB02CP013	CWP-B DISCH PRESS	PT	CW	3.2	5.5	Kg/Cm²	33	60	C	14			LIR-33	LIR- TYPE -A	
PAB01CL011	CWP-A LVL	LT-ULTRA	CW	3.2	5.5	Kg/Cm²	33	60					LIR-33-JB	LIR- TYPE -A	
PAB01CL012	CWP-A LVL	LT-ULTRA	CW	3.2	5.5	Kg/Cm²	33	60					LIR-33-JB	LIR- TYPE -A	
PAB02CL011	CWP-B LVL	LT-ULTRA	CW	3.2	5.5	Kg/Cm²	33	60					LIR-33-JB	LIR- TYPE -A	
PAB02CL012	CWP-B LVL	LT-ULTRA	CW	3.2	5.5	Kg/Cm²	33	60					LIR-33-JB	LIR- TYPE -A	
PAB10CP011	CWP DISCH HDR PRESS	PT	CW	3.2	5.5	Kg/Cm²	33	60	C	14			LIR-34	LIR- TYPE -B	
PAB10CP012	CWP DISCH HDR PRESS	PT	CW	3.2	5.5	Kg/Cm²	33	60	C	14			LIR-34	LIR- TYPE -B	
PAB10CP013	CWP DISCH HDR PRESS	PT	CW	3.2	5.5	Kg/Cm²	33	60	C	14			LIR-34	LIR- TYPE -B	
PAB11CP011	CONDNSR-1 I/L PRESS-L	PT	CW	2.9	5.5	Kg/Cm²	33	60	C	14			LIR-35	LIR- TYPE -B	
PAB11CP012	DP ACRS CONDNSR-1	DPT	CW	2.9	5.5	Kg/Cm²	33	60	C	16			LIR-35	LIR- TYPE -B	
PAB21CP011	CONDNSR-1 I/L PRESS-R	PT	CW	2.9	5.5	Kg/Cm²	33	60	C	14			LIR-35	LIR- TYPE -B	
PAB21CP012	DP ACRS CONDNSR-1	DPT	CW	2.9	5.5	Kg/Cm²	33	60	C	16			LIR-35	LIR- TYPE -B	
PAB11CT011	CONDNSR-1 I/L TEMP-L	PRT-100	CW	2.9	5.5	Kg/Cm²	33	60					LIR-35-JB	LIR- TYPE -B	Wiring shall be joined in LIE/LIR.For each PRT-100 sensor 15 Nos TBs shall be provided.
PAB21CT011	CONDNSR-1 I/L TEMP-R	PRT-100	CW	2.9	5.5	Kg/Cm²	33	60					LIR-35-JB	LIR- TYPE -B	Wiring shall be joined in LIE/LIR.For each PRT-100 sensor 15 Nos TBs shall be provided.
PAB11CP013	CONDNSR-2 I/L PRESS-L	PT	CW	2.6	5.5	Kg/Cm²	37.5	60	C	14			LIR-36	LIR- TYPE -A	
PAB11CP014	DP ACRS CONDNSR-2	DPT	CW	2.6	5.5	Kg/Cm²	37.5	60	C	16			LIR-36	LIR- TYPE -A	
PAB11CP015	CONDNSR-2 O/L PRESS-L	PT	CW	2.5	5.5	Kg/Cm²	42	60	C	14			LIR-36	LIR- TYPE -A	
PAB21CP013	CONDNSR-2 I/L PRESS-R	PT	CW	2.6	5.5	Kg/Cm²	37.5	60	C	14			LIR-36	LIR- TYPE -A	
PAB21CP014	DP ACRS CONDNSR-2	DPT	CW	2.6	5.5	Kg/Cm²	37.5	60	C	16			LIR-36	LIR- TYPE -A	
PAB21CP015	CONDNSR-2 O/L PRESS-R	PT	CW	2.5	5.5	Kg/Cm²	42	60	C	14			LIR-36	LIR- TYPE -A	
PAB11CT012	CONDNSR-2 I/L TEMP-L	PRT-100	CW	2.5	5.5	Kg/Cm²	42	60					LIR-36-JB	LIR- TYPE -A	Wiring shall be joined in LIE/LIR.For each PRT-100 sensor 15 Nos TBs shall be provided.
PAB11CT013	CONDNSR-2 O/L TEMP-L	PRT-100	CW	2.5	5.5	Kg/Cm²	42	60					LIR-36-JB	LIR- TYPE -A	Wiring shall be joined in LIE/LIR.For each PRT-100 sensor 15 Nos TBs shall be provided.
PAB21CT012	CONDNSR-2 I/L TEMP-R	PRT-100	CW	2.5	5.5	Kg/Cm²	42	60					LIR-36-JB	LIR- TYPE -A	Wiring shall be joined in LIE/LIR.For each PRT-100 sensor 15 Nos TBs shall be provided.
PAB21CT013	CONDNSR-2 O/L TEMP-R	PRT-100	CW	2.5	5.5	Kg/Cm²	42	60					LIR-36-JB	LIR- TYPE -A	Wiring shall be joined in LIE/LIR.For each PRT-100 sensor 15 Nos TBs shall be provided.
PCB01CP011	ACWP-A DISCH PRESS	PT	ACW	3.8	7.5	Kg/Cm²	33	60	C	14			LIR-37	LIR- TYPE -A	
PCB02CP011	ACWP-B DISCH PRESS	PT	ACW	3.8	7.5	Kg/Cm²	33	60	C	14			LIR-37	LIR- TYPE -A	
PCB10CP011	ACWP DISCH HDR PRESS	PT	ACW	3.8	7.5	Kg/Cm²	33	60	C	14			LIR-37	LIR- TYPE -A	
PCB10CP012	ACWP DISCH HDR PRESS	PT	ACW	3.8	7.5	Kg/Cm²	33	60	C	14			LIR-37	LIR- TYPE -A	
PCB10CP013	ACWP DISCH HDR PRESS	PT	ACW	3.8	7.5	Kg/Cm²	33	60	C	14			LIR-37	LIR- TYPE -A	
PCB01CL011	ACWP-A LVL	LT-ULTRA	ACW	3.8	7.5	Kg/Cm²	33	60					LIR-37-JB	LIR- TYPE -A	
PCB01CL012	ACWP-A LVL	LT-ULTRA	ACW	3.8	7.5	Kg/Cm²	33	60					LIR-37-JB	LIR- TYPE -A	
PCB02CL011	ACWP-B LVL	LT-ULTRA	ACW	3.8	7.5	Kg/Cm²	33	60					LIR-37-JB	LIR- TYPE -A	
PCB02CL012	ACWP-B LVL	LT-ULTRA	ACW	3.8	7.5	Kg/Cm²	33	60					LIR-37-JB	LIR- TYPE -A	
PCB41CP011	DP ACRSS ACW PHE-A (TG AUX)	DPT	ACW	3.2	7.5	Kg/Cm²	36	60	C	16			LIR-38	LIR- TYPE -A	
PCB42CP011	DP ACRSS ACW PHE-B (TG AUX)	DPT	ACW	3.2	7.5	Kg/Cm²	36	60	C	16			LIR-38	LIR- TYPE -A	
PCB43CP011	DP ACRSS ACW PHE-C (TG AUX)	DPT	ACW	3.2	7.5	Kg/Cm²	36	60	C	16			LIR-38	LIR- TYPE -A	
PCB45CP011	DP ACRSS PHE-A (ACW)(SG AUX)	DPT	ACW	3.2	7.5	Kg/Cm²	36	60	C	16			LIR-38	LIR- TYPE -A	
PCB46CP011	DP ACRSS ACW PHE-B (SG AUX)	DPT	ACW	3.2	7.5	Kg/Cm²	36	60	C	16			LIR-38	LIR- TYPE -A	
PCB41CT011	TG PHE-A DISCH TEMP	PRT-100	ACW	3.2	7.5	Kg/Cm²	36	60					LIR-38-JB	LIR- TYPE -A	Wiring shall be joined in LIE/LIR.For each PRT-100 sensor 15 Nos TBs shall be provided.
PCB42CT011	TG PHE-B DISCH TEMP	PRT-100	ACW	3.2	7.5	Kg/Cm²	36	60					LIR-38-JB	LIR- TYPE -A	Wiring shall be joined in LIE/LIR.For each PRT-100 sensor 15 Nos TBs shall be provided.
PCB43CT011	TG PHE-C DISCH TEMP	PRT-100	ACW	3.2	7.5	Kg/Cm²	36	60					LIR-38-JB	LIR- TYPE -A	Wiring shall be joined in LIE/LIR.For each PRT-100 sensor 15 Nos TBs shall be provided.
PCB45CT011	SG PHE-A DISCH TEMP	PRT-100	ACW	3.2	7.5	Kg/Cm²	36	60					LIR-38-JB	LIR- TYPE -A	Wiring shall be joined in LIE/LIR.For each PRT-100 sensor 15 Nos TBs shall be provided.
PCB46CT011	SG PHE-B DISCH TEMP	PRT-100	ACW	3.2	7.5	Kg/Cm²	36	60					LIR-38-JB	LIR- TYPE -A	Wiring shall be joined in LIE/LIR.For each PRT-100 sensor 15 Nos TBs shall be provided.
PCB61CP011	DP ACROSS VAC PMP-1 HE	DPT	ACW	3.7	7.5	Kg/Cm²	36	60	C	16			LIR-39	LIR- TYPE -C	
PCB62CP011	DP ACROSS VAC PMP-2 HE	DPT	ACW	3.7	7.5	Kg/Cm²	36	60	C	16			LIR-39	LIR- TYPE -C	
PCB61CT012	VAC PMP-1 HE O/L TEMP	PRT-100	ACW	3.7	7.5	Kg/Cm²	36	60					LIR-39-JB	LIR- TYPE -C	Wiring shall be joined in LIE/LIR.For each PRT-100 sensor 15 Nos TBs shall be provided.
PCB62CT012	VAC PMP-2 HE O/L TEMP	PRT-100	ACW	3.7	7.5	Kg/Cm²	36	60					LIR-39-JB	LIR- TYPE -C	Wiring shall be joined in LIE/LIR.For each PRT-100 sensor 15 Nos TBs shall be provided.
PGC00CP011	TG DMCW PUMP SUC HDR PRESS	PT	DMCW	2.6	7	Kg/Cm²	46	60	F	18			LIR-40	LIR- TYPE -A	
PGC00CP012	TG DMCW PUMP SUC HDR PRESS	PT	DMCW	2.6	7	Kg/Cm²	46	60	F	18			LIR-40	LIR- TYPE -A	

NOTE:FOR SHCEME NO 14 AND 16 -WHERE EVER DESIGN PRESSURE >=40KG/CM2-TWO DRAIN VALVES SHALL BE PROVIDED PER LINE.

KKS TAG	DESCRIPTION	INS TYPE	MEDIUM	OPR PRESS	DESIGN PRESS	UNIT PRESS	OPR TEMP (°C)	DESIGN TEMP (°C)	IP MATERIAL	SCHEME NO	AIR PURGING	CONT PURG	LIE/LIR	Type of LIE/LIR	Grouping Remarks
PGC00CP013	TG DMCW PUMP SUC HDR PRESS	PT	DMCW	2.6	7	Kg/Cm²	46	60	F	18			LIR-40	LIR- TYPE -A	
PGC01CP011	TG DMCW PUMP-A DISCH PRESS	PT	DMCW	6.6	10	Kg/Cm²	46	60	F	18			LIR-40	LIR- TYPE -A	
PGC10CP011	TG DMCW PUMP DISCH HDR PRESS	PT	DMCW	6.5	10	Kg/Cm²	46	60	F	18			LIR-40	LIR- TYPE -A	
PGC10CP012	TG DMCW PUMP DISCH HDR PRESS	PT	DMCW	6.5	10	Kg/Cm²	46	60	F	18			LIR-40	LIR- TYPE -A	
PGC10CF011	TG DMCW FLOW AT PHE DISCH HDR TO TURB & GEN CLR	FT (ULT)	DMCW	6.5	10	Kg/Cm²	46	60					LIR-40-JB	LIR- TYPE -A	
PGC10CF012	TG DMCW FLOW AT PHE DISCH HDR TO STN AUX CLRS	FT (ULT)	DMCW	6.5	10	Kg/Cm²	46	60					LIR-40-JB	LIR- TYPE -A	
PGC10CF013	TG DMCW FLOW AT PHE DISCH HDR TO BFP,CEP THRUST BRG CLRS & DRIP PMP CLRS	FT (ULT)	DMCW	6.5	10	Kg/Cm²	46	60					LIR-40-JB	LIR- TYPE -A	
PGC10CF014	TG DMCW DISCH HDR FLOW	FT (ULT)	DMCW	6.5	10	Kg/Cm²	46	60					LIR-40-JB	LIR- TYPE -A	
PGC10CT011	TG DMCW PUMP DISCH HDR TEMP	PRT-100	DMCW	6.5	10	Kg/Cm²	46	60					LIR-40-JB	LIR- TYPE -A	Wiring shall be joined in LIE/LIR.For each PRT-100 sensor 15 Nos TBs shall be provided.
PGC11CT011	DMCW TEMP AT TG ECW PHE-A O/L	PRT-100	DMCW	6.5	10	Kg/Cm²	46	60					LIR-40-JB	LIR- TYPE -A	Wiring shall be joined in LIE/LIR.For each PRT-100 sensor 15 Nos TBs shall be provided.
PGC15CT011	TG DMCW TEMP AT TG PHE DISCH HDR	PRT-100	DMCW	6.5	10	Kg/Cm²	46	60					LIR-40-JB	LIR- TYPE -A	Wiring shall be joined in LIE/LIR.For each PRT-100 sensor 15 Nos TBs shall be provided.
PGM40CT011	DMCW TEMP AT SEAL OIL CLR O/L	PRT-100	DMCW	6.5	10	Kg/Cm²	46	60					LIR-40-JB	LIR- TYPE -A	Wiring shall be joined in LIE/LIR.For each PRT-100 sensor 15 Nos TBs shall be provided.
PGC02CP011	TG DMCW PUMP-B DISCH PRESS	PT	DMCW	6.6	10	Kg/Cm²	46	60	F	18			LIR-41	LIR- TYPE -A	
PGC03CP011	TG DMCW PUMP-C DISCH PRESS	PT	DMCW	6.6	10	Kg/Cm²	46	60	F	18			LIR-41	LIR- TYPE -A	
PGC31CP001	SG DMCW PUMP-B DISCH PRESS	PT	DMCW	8.1	8.8	Kg/Cm²	42.3	60	F	18			LIR-41	LIR- TYPE -A	
PGC41CP011	DP ACROSS PHE-A(SG)	DPT	DMCW	7.2	10	Kg/Cm²	42.3	44.4	F	20			LIR-41	LIR- TYPE -A	
PGC42CP011	DP ACROSS PHE-B(SG)	DPT	DMCW	7.2	10	Kg/Cm²	42.3	44.4	F	20			LIR-41	LIR- TYPE -A	
PGC12CT011	DMCW TEMP AT TG ECW PHE-B O/L	PRT-100	DMCW	7.2	10	Kg/Cm²	42.3	44.4					LIR-41-JB	LIR- TYPE -A	Wiring shall be joined in LIE/LIR.For each PRT-100 sensor 15 Nos TBs shall be provided.
PGC13CT011	DMCW TEMP AT TG ECW PHE-C O/L	PRT-100	DMCW	7.2	10	Kg/Cm²	42.3	44.4					LIR-41-JB	LIR- TYPE -A	Wiring shall be joined in LIE/LIR.For each PRT-100 sensor 15 Nos TBs shall be provided.
PGC42CT012	DMCW TEMP AT PHE-B(SG) O/L	PRT-100	DMCW	7.2	10	Kg/Cm²	42.3	44.4					LIR-41-JB	LIR- TYPE -A	Wiring shall be joined in LIE/LIR.For each PRT-100 sensor 15 Nos TBs shall be provided.
PGC30CP011	SG DMCW SUC HDR PRESS	PT	DMCW	2.6	6	Kg/Cm²	42.3	60	F	18			LIR-42	LIR- TYPE -A	
PGC30CP012	SG DMCW SUC HDR PRESS	PT	DMCW	2.6	6	Kg/Cm²	42.3	60	F	18			LIR-42	LIR- TYPE -A	
PGC30CP013	SG DMCW SUC HDR PRESS	PT	DMCW	2.6	6	Kg/Cm²	42.3	60	F	18			LIR-42	LIR- TYPE -A	
PGC32CP001	SG DMCW PUMP-A DISCH PRESS	PT	DMCW	8.1	8.8	Kg/Cm²	42.3	60	F	18			LIR-42	LIR- TYPE -A	
PGC40CP011	SG DMCW PUMP DISCH HDR PRESS	PT	DMCW	7.5	10	Kg/Cm²	42.3	60	F	18			LIR-42	LIR- TYPE -A	
PGC40CP012	SG DMCW PUMP DISCH HDR PRESS	PT	DMCW	7.5	10	Kg/Cm²	42.3	60	F	18			LIR-42	LIR- TYPE -A	
PGC40CT011	SG DMCW PMP DISH HDR TEMP	PRT-100	DMCW	7.5	10	Kg/Cm²	42.3	60					LIR-42-JB	LIR- TYPE -A	Wiring shall be joined in LIE/LIR.For each PRT-100 sensor 15 Nos TBs shall be provided.
PGC41CT011	DMCW TEMP AT PHE-A(SG) O/L	PRT-100	DMCW	7.5	10	Kg/Cm²	42.3	60					LIR-42-JB	LIR- TYPE -A	Wiring shall be joined in LIE/LIR.For each PRT-100 sensor 15 Nos TBs shall be provided.
PGC45CF011	SG AUX PHE's DISCH FLOW TO DMCW SG AUX	FT (ULT)	DMCW	7.5	10	Kg/Cm²	42.3	60					LIR-42-JB	LIR- TYPE -A	
PGC45CT011	SG AUX PHE's DISCH TEMP TO DMCW SG AUX	PRT-100	DMCW	7.5	10	Kg/Cm²	42.3	60					LIR-42-JB	LIR- TYPE -A	Wiring shall be joined in LIE/LIR.For each PRT-100 sensor 15 Nos TBs shall be provided.
PGQ30CT011	SG DMCW TEMP AT SWAS FOR CHILLER SYS I/L	PRT-100	DMCW	7.5	10	Kg/Cm²	42.3	60					LIR-42-JB	LIR- TYPE -A	Wiring shall be joined in LIE/LIR.For each PRT-100 sensor 15 Nos TBs shall be provided.
PGQ30CT012	SG DMCW TEMP AT SWAS FOR CHILLER SYS O/L	PRT-100	DMCW	7.5	10	Kg/Cm²	42.3	60					LIR-42-JB	LIR- TYPE -A	Wiring shall be joined in LIE/LIR.For each PRT-100 sensor 15 Nos TBs shall be provided.
PGC11CP011	DMCW DP ACROSS PHE-A(TG)	DPT	DMCW	6.5	10	Kg/Cm²	46	60	F	20			LIR-43	LIR- TYPE -B	
PGC12CP011	DMCW DP ACROSS PHE-B(TG)	DPT	DMCW	6.5	10	Kg/Cm²	46	60	F	20			LIR-43	LIR- TYPE -B	
PGC13CP011	DMCW DP ACROSS PHE-C(TG)	DPT	DMCW	6.5	10	Kg/Cm²	46	60	F	20			LIR-43	LIR- TYPE -B	
PGB01CL011	DMCW O/H TNK LVL	LT	DMCW	0.25	10	Kg/Cm²	38	60	F	20			LIR-44	LIR- TYPE -C	
PGB01CL012	DMCW O/H TNK LVL	LT	DMCW	0.25	10	Kg/Cm²	38	60	F	20			LIR-44	LIR- TYPE -C	
PCB63CP011	DP ACROSS VAC PMP-3 HE	DPT	ACW	3.7	7.5	Kg/Cm²	36	60	C	16			LIR-45	LIR- TYPE -C	
PCB64CP011	DP ACROSS VAC PMP-4 HE	DPT	ACW	3.7	7.5	Kg/Cm²	36	60	C	16			LIR-45	LIR- TYPE -C	
PCB63CT012	VAC PMP-3 HE O/L TEMP	PRT-100	ACW	3.7	7.5	Kg/Cm²	36	60					LIR-45-JB	LIR- TYPE -C	Wiring shall be joined in LIE/LIR.For each PRT-100 sensor 15 Nos TBs shall be provided.
PCB64CT012	VAC PMP-4 HE O/L TEMP	PRT-100	ACW	3.7	7.5	Kg/Cm²	36	60					LIR-45-JB	LIR- TYPE -C	Wiring shall be joined in LIE/LIR.For each PRT-100 sensor 15 Nos TBs shall be provided.
LCA63CP011	COND PRESS AT LPH-1 O/L	PT	COND	30.62	47	Kg/Cm²	43.8	90	C	14			LIR-46	LIR- TYPE -A	
LCA70CP011	LPH-3 I/L COND PRESS	PT	COND	30.62	47	Kg/Cm²	74.2	90	C	14			LIR-46	LIR- TYPE -A	
LCA80CP012	COND PRESS AT LPH-4 O/L	PT	COND	30.62	47	Kg/Cm²	106.3	130	C	14			LIR-46	LIR- TYPE -A	
LCA90CP011	LPH-5 I/L COND PRESS	PT	COND	30.62	47	Kg/Cm²	132	160	C	14			LIR-46	LIR- TYPE -A	
LCA95CP011	COND PRESS AT LPH-5 O/L	PT	COND	30.62	47	Kg/Cm²	132	160	C	14			LIR-46	LIR- TYPE -A	
LCA63CT011	LPH-1 O/L COND TEMP	PRT-100	COND	30.62	47	Kg/Cm²	43.8	90					LIR-46-JB	LIR- TYPE -A	Wiring shall be joined in LIE/LIR.For each PRT-100 sensor 15 Nos TBs shall be provided.
LAB74CP011	FW PRESS BEF HPH-7B DES HTR	PT	FW	332.78	355	Kg/Cm²	306.6	315	B	10			LIR-47	LIR- TYPE -A	
LAB75CP011	FW PRESS AFT HPH-7B DES HTR	PT	FW	332.78	355	Kg/Cm²	310	315	B	10			LIR-47	LIR- TYPE -A	
LAD72CL011	LEVEL - 7B DESUPERHEATER	LT	STEAM	30	30	Kg/Cm²	505	505	B	12			LIR-47	LIR- TYPE -A	
LAD72CL012	LEVEL - 7B DESUPERHEATER	LT	STEAM	30	30	Kg/Cm²	505	505	B	12			LIR-47	LIR- TYPE -A	
LAD72CL013	LEVEL - 7B DESUPERHEATER	LT	STEAM	30	30	Kg/Cm²	505	505	B	12			LIR-47	LIR- TYPE -A	
LBQ72CP011	EXT PRESS FRM IPT TO HPH-7B DES HTR	PT	STEAM	27.23	32	Kg/Cm²	464.3	475	E	6			LIR-47	LIR- TYPE -A	
LCM40CL001	FLASH TNK-A LEVEL	LT	COND	0.1	3.5	Kg/Cm²	46	210	C	16			LIR-48	LIR- TYPE -C	
LCM50CL001	FLASH TNK-B LEVEL	LT	COND	0.1	3.5	Kg/Cm²	46	210	C	16			LIR-48	LIR- TYPE -C	
LCM40CT001	FLASH TNK-A SHELL TEMP	PRT-100	COND	0.1	3.5	Kg/Cm²	46	210					LIR-48-JB	LIR- TYPE -C	Wiring shall be joined in LIE/LIR.For each PRT-100 sensor 15 Nos TBs shall be provided.
LCM40CT002	FLASH TNK-A SHELL TEMP	PRT-100	COND	0.1	3.5	Kg/Cm²	46	210					LIR-48-JB	LIR- TYPE -C	Wiring shall be joined in LIE/LIR.For each PRT-100 sensor 15 Nos TBs shall be provided.
LCM50CT001	FLASH TNK-B SHELL TEMP	PRT-100	COND	0.1	3.5	Kg/Cm²	46	210					LIR-48-JB	LIR- TYPE -C	Wiring shall be joined in LIE/LIR.For each PRT-100 sensor 15 Nos TBs shall be provided.
LCM50CT002	FLASH TNK-B SHELL TEMP	PRT-100	COND	0.1	3.5	Kg/Cm²	46	210					LIR-48-JB	LIR- TYPE -C	Wiring shall be joined in LIE/LIR.For each PRT-100 sensor 15 Nos TBs shall be provided.
LCH10CF011	HPH-7A DRN FLOW TO DEA	FT	COND	25.34	34	Kg/Cm²	197.7	200	C	16			LIR-49	LIR- TYPE -B	
LCH10CF012	HPH-7A DRN FLOW TO DEA	FT	COND	25.34	34	Kg/Cm²	197.7	200	C	16			LIR-49	LIR- TYPE -B	
LCH20CF011	HPH-7B DRN FLOW TO DEA	FT	COND	25.34	34	Kg/Cm²	197.7	200	C	16			LIR-49	LIR- TYPE -B	
LCH20CF012	HPH-7B DRN FLOW TO DEA	FT	COND	25.34	34	Kg/Cm²	197.7	200	C	16			LIR-49	LIR- TYPE -B	
LCR80CF011	DM FLOW TO CONDENSER CONTROL STATION	FT	DM WTR	7	10	Kg/Cm²	40	50	F	20			LIR-50	LIR- TYPE -C	
10HLD01CP011	APH A - Support Bearing DPT1	DPT	Lubricant Oil	2	5	kg/cm²			C	16			RPT-LIE-001	LIE- TYPE -B	
10HLD01CP012	APH A - Support Bearing DPT2	DPT	Lubricant Oil	2	5	kg/cm²			C	16			RPT-LIE-001	LIE- TYPE -B	
10HLD01CP013	APH A - Guide Bearing DPT1	DPT	Lubricant Oil	2	5	kg/cm²			C	16			RPT-LIE-001	LIE- TYPE -B	
10HLD01CP014	APH A - Guide Bearing DPT2	DPT	Lubricant Oil	2	5	kg/cm²			C	16			RPT-LIE-001	LIE- TYPE -B	
10HLD01CF001	APH A - Support Bearing FT1	MFT	Lubricant Oil										RPT-LIE-001-JB	LIE- TYPE -B	
10HLD01CF002	APH A - Support Bearing FT2	MFT	Lubricant Oil										RPT-LIE-001-JB	LIE- TYPE -B	
10HLD01CP001	APH A - Support Bearing PT1	PT	Lubricant Oil	5	10	kg/cm²			C	14			RPT-LIE-002	LIE- TYPE -B	
10HLD01CP002	APH A - Support Bearing PT2	PT	Lubricant Oil	5	10	kg/cm²			C	14			RPT-LIE-002	LIE- TYPE -B	
10HLD01CP003	APH A - Guide Bearing PT1	PT	Lubricant Oil	5	10	kg/cm²			C	14			RPT-LIE-002	LIE- TYPE -B	
10HLD01CP004	APH A - Guide Bearing PT2	PT	Lubricant Oil	5	10	kg/cm²			C	14			RPT-LIE-002	LIE- TYPE -B	
10HLD01CF003	APH A - Guide Bearing FT1	MFT	Lubricant Oil										RPT-LIE-002-JB	LIE- TYPE -B	
10HLD01CF004	APH A - Guide Bearing FT2	MFT	Lubricant Oil										RPT-LIE-002-JB	LIE- TYPE -B	

NOTE:FOR SHCEME NO 14 AND 16 -WHERE EVER DESIGN PRESSURE >=40KG/CM2-TWO DRAIN VALVES SHALL BE PROVIDED PER LINE.

KKS TAG	DESCRIPTION	INS TYPE	MEDIUM	OPR PRESS	DESIGN PRESS	UNIT PRESS	OPR TEMP (°C)	DESIGN TEMP (°C)	IP MATERIAL	SCHEME NO	AIR PURGING	CONT PURG	LIE/LIR	Type of LIE/LIR	Grouping Remarks
10HLD01CP005	APH A - Alarm at Air line system to Air Motor PT1	PT	Air	5	10	kg/cm²			D	22			RPT-LIE-003	LIE- TYPE -C	
10HLD01CP006	APH A - Alarm at Air line system to Air Motor PT2	PT	Air	5	10	kg/cm²			D	22			RPT-LIE-003	LIE- TYPE -C	
10HLD02CP011	APH B - Support Bearing DPT1	DPT	Lubricant Oil	2	5	kg/cm²			C	16			RPT-LIE-004	LIE- TYPE -B	
10HLD02CP012	APH B - Support Bearing DPT2	DPT	Lubricant Oil	2	5	kg/cm²			C	16			RPT-LIE-004	LIE- TYPE -B	
10HLD02CP013	APH B - Guide Bearing DPT1	DPT	Lubricant Oil	2	5	kg/cm²			C	16			RPT-LIE-004	LIE- TYPE -B	
10HLD02CP014	APH B - Guide Bearing DPT2	DPT	Lubricant Oil	2	5	kg/cm²			C	16			RPT-LIE-004	LIE- TYPE -B	
10HLD02CF001	APH B - Support Bearing FT1	MFT	Lubricant Oil										RPT-LIE-004-JB	LIE- TYPE -B	
10HLD02CF002	APH B - Support Bearing FT2	MFT	Lubricant Oil										RPT-LIE-004-JB	LIE- TYPE -B	
10HLD02CP001	APH B - Support Bearing PT1	PT	Lubricant Oil	5	10	kg/cm²			C	14			RPT-LIE-005	LIE- TYPE -B	
10HLD02CP002	APH B - Support Bearing PT2	PT	Lubricant Oil	5	10	kg/cm²			C	14			RPT-LIE-005	LIE- TYPE -B	
10HLD02CP003	APH B - Guide Bearing PT1	PT	Lubricant Oil	5	10	kg/cm²			C	14			RPT-LIE-005	LIE- TYPE -B	
10HLD02CP004	APH B - Guide Bearing PT2	PT	Lubricant Oil	5	10	kg/cm²			C	14			RPT-LIE-005	LIE- TYPE -B	
10HLD02CF003	APH B - Guide Bearing FT1	MFT	Lubricant Oil										RPT-LIE-005-JB	LIE- TYPE -B	
10HLD02CF004	APH B - Guide Bearing FT2	MFT	Lubricant Oil										RPT-LIE-005-JB	LIE- TYPE -B	
10HLD02CP005	APH B - Alarm at Air line system to Air Motor PT1	PT	Air	5	10	kg/cm²			D	22			RPT-LIE-006	LIE- TYPE -C	
10HLD02CP006	APH B - Alarm at Air line system to Air Motor PT2	PT	Air	5	10	kg/cm²			D	22			RPT-LIE-006	LIE- TYPE -C	
HHL41CF001	L-SOFA CORNER-1 FLOW TRANSMITTER	FT	SEC. AIR	147	169	mmWC	329	400	D	24	Yes	2	SADC-LIE-01	LIE- TYPE -B	
HHL44CF001	L-SOFA CORNER-4 FLOW TRANSMITTER	FT	SEC. AIR	147	169	mmWC	329	400	D	24		2	SADC-LIE-01	LIE- TYPE -B	
HHL42CF001	L-SOFA CORNER-2 FLOW TRANSMITTER	FT	SEC. AIR	147	169	mmWC	329	400	D	24	Yes	2	SADC-LIE-02	LIE- TYPE -B	
HHL43CF001	L-SOFA CORNER-3 FLOW TRANSMITTER	FT	SEC. AIR	147	169	mmWC	329	400	D	24		2	SADC-LIE-02	LIE- TYPE -B	
HHL41CF002	H-SOFA FRONT WALL FLOW TRANSMITTER	FT	SEC. AIR	147	169	mmWC	329	400	D	24	Yes	2	SADC-LIE-03	LIE- TYPE -B	
HHL42CF002	H-SOFA LEFT WALL FLOW TRANSMITTER	FT	SEC. AIR	147	169	mmWC	329	400	D	24		2	SADC-LIE-03	LIE- TYPE -B	
HHL43CF002	H-SOFA REAR WALL FLOW TRANSMITTER	FT	SEC. AIR	147	169	mmWC	329	400	D	24	Yes	2	SADC-LIE-04	LIE- TYPE -B	
HHL44CF002	H-SOFA RIGHT WALL FLOW TRANSMITTER	FT	SEC. AIR	147	169	mmWC	329	400	D	24		2	SADC-LIE-04	LIE- TYPE -B	
HCB01CP001	SB STEAM PRESSURE AFTER SBPRV	PT	STEAM	40	50	kg/cm²	452	500	C	14			SBC-JB-01	LIE- TYPE -C	
HCB01CP002	SB STEAM PRESSURE AFTER SBPRV	PT	STEAM	40	50	kg/cm²	452	500	C	14			SBC-JB-01	LIE- TYPE -C	
HCB01CF001	SB STEAM SUPPLY FLOW	FT	STEAM	40	50	kg/cm²	452	500	C	16			SBC-JB-02	LIE- TYPE -A	
HCB02CF001	SB RETRACTS STEAM FLOW - RIGHT	FT	STEAM	40	50	kg/cm²	452	500	C	16			SBC-JB-02	LIE- TYPE -A	
HCB04CF001	WALL BLOWER STEAM FLOW - RIGHT & REAR	FT	STEAM	40	50	kg/cm²	452	500	C	16			SBC-JB-02	LIE- TYPE -A	
HCB05CF001	SB RETRACTS STEAM FLOW - LEFT	FT	STEAM	40	50	kg/cm²	452	500	C	16			SBC-JB-02	LIE- TYPE -A	
HCB06CF001	WALL BLOWER STEAM FLOW - LEFT & FRONT	FT	STEAM	40	50	kg/cm²	452	500	C	16			SBC-JB-02	LIE- TYPE -A	
HCB03CP003	AH-A HOT END DA HEAD PRESSURE	PT	STEAM	40	50	kg/cm²	452	500	C	14			SBC-JB-06	LIE- TYPE -C	
HCB03CP004	AH-B HOT END DA HEAD PRESSURE	PT	STEAM	40	50	kg/cm²	452	500	C	14			SBC-JB-06	LIE- TYPE -C	
HBK10CP002	FURNACE TO WINDBOX DIFF. PRESS. - LEFT	DPT	FLUE GAS / SEC AIR	-5 / 100	-10 / 142	mmWC	1199 / 329	1300 / 400	D	24	Yes	2	SG-LIE-01	LIE- TYPE -C	
HBK15CP001	FURNACE TO WINDBOX DIFF. PRESS. - RIGHT	DPT	FLUE GAS / SEC AIR	-5 / 100	-10 / 142	mmWC	1199 / 329	1300 / 400	D	24	Yes	2	SG-LIE-02	LIE- TYPE -B	
HBK15CP002	FURNACE TO WINDBOX DIFF. PRESS. - RIGHT	DPT	FLUE GAS / SEC AIR	-5 / 100	-10 / 142	mmWC	1199 / 329	1300 / 400	D	24		2	SG-LIE-02	LIE- TYPE -B	
10HFE10CP099	PT for PA AH OUTLET	PT	AIR & FLUE GAS	200	260	mmWC			D	22	Yes	1	STAND ALONE		
10HFE20CP099	PT for PA AH OUTLET	PT	AIR & FLUE GAS	200	260	mmWC			D	22	Yes	1	STAND ALONE		
10HFW11CP099	PT for SA AH OUTLET	PT	AIR & FLUE GAS	200	260	mmWC			D	22	Yes	1	STAND ALONE		
10HFW12CP099	PT for SA AH OUTLET	PT	AIR & FLUE GAS	200	260	mmWC			D	22	Yes	1	STAND ALONE		
10HNC10CP098	PT for ID Fan Sealing/Cooling Air Fan	PT	Atm Air	100	200	mmWC			D	22			STAND ALONE		
10HNC10CP099	PT for ID FAN OUTLET	PT	AIR & FLUE GAS	300	400	mmWC			D	22	Yes	1	STAND ALONE		
10HNC20CP098	PT for ID Fan Sealing/Cooling Air Fan	PT	Atm Air	100	200	mmWC			D	22			STAND ALONE		
10HNC20CP099	PT for ID FAN OUTLET	PT	AIR & FLUE GAS	300	400	mmWC			D	22	Yes	1	STAND ALONE		
HFW01CP001	DP ACRS DYNAVANE FILTER	DPT	SEAL AIR	719	931	mmWC	35	50	D	24			STAND ALONE		
HFW01CP002	DP ACRS DYNAVANE FILTER	DPT	SEAL AIR	719	931	mmWC	35	50	D	24			STAND ALONE		
HJF51CP001	LDO HDR PRESS	PT	LDO	4	16.2	Kg/Cm²	35		C	14			STAND ALONE		
HJF51CP002	LDO HDR PRESS	PT	LDO	4	16.2	Kg/Cm²	35.00		C	14			STAND ALONE		
HJF51CP003	LDO HDR PRESS	PT	LDO	4	16.2	Kg/Cm²	35		C	14			STAND ALONE		
HLB10CP002	FD FAN-A DP B/W SUC CHAMBER & U/S OF IMPELLER HOUSING	DPT	SEC. AIR	-17	-25	mmWC	27	50	D	24			STAND ALONE		
HLB15CP002	FD FAN-B DP B/W SUC CHAMBER & U/S OF IMPELLER HOUSING	DPT	SEC. AIR	-17	-25	mmWC	27	50	D	24			STAND ALONE		
HNC10CP001	ID FAN-A I/L PRESS	PT	FLUE GAS	-436	-714	mmWC	133	150	D	22	Yes	1	STAND ALONE		
HNC10CP002	ID FAN-A DP B/W SUC CHAMBER & U/S OF IMPELLER HOUSING	DPT	FLUE GAS	-436	-714	mmWC	133	150	D	24	Yes	2	STAND ALONE		
HNC10CP003	ID FAN-A O/L DIFFUSER PRESS	PT	FLUE GAS	481	720	mmWC	133	150	D	22	Yes	1	STAND ALONE		
HNC15CP001	ID FAN-A I/L PRESS	PT	FLUE GAS	-436	-714	mmWC	133	150	D	22	Yes	1	STAND ALONE		
HNC15CP002	ID FAN-B DP B/W SUC CHAMBER & U/S OF IMPELLER HOUSING	DPT	FLUE GAS	-436	-714	mmWC	133	150	D	24	Yes	2	STAND ALONE		
HNC15CP003	ID FAN-B O/L DIFFUSER PRESS	PT	FLUE GAS	481	720	mmWC	133	150	D	22	Yes	1	STAND ALONE		
QHX27CP001	ID FAN-B SUC HDR PRESS	PT	DMCW	6	10	Kg/Cm²	39	60	F	18			STAND ALONE		
QHX27CP002	ID FAN-B DISH HDR PRESS	PT	DMCW	6	10	Kg/Cm²	39	60	F	18			STAND ALONE		
QHX27CP003	ID FAN-B DISH HDR PRESS	PT	DMCW	6	10	Kg/Cm²	39	60	F	18			STAND ALONE		
QHX27CP004	PRESSURE AT ID FAN-B MOTOR STATOR COOLER OUTLET	PT	DMCW	6	10	Kg/Cm²	39	60	F	18			STAND ALONE		
QHX28CP001	ID FAN-A SUC HDR PRESS	PT	DMCW	6	10	Kg/Cm²	39	60	F	18			STAND ALONE		
QHX28CP002	ID FAN-A DISH HDR PRESS	PT	DMCW	6	10	Kg/Cm²	39	60	F	18			STAND ALONE		
QHX28CP003	ID FAN-A DISH HDR PRESS	PT	DMCW	6	10	Kg/Cm²	39	60	F	18			STAND ALONE		
QHX28CP004	PRESSURE AT ID FAN-A MOTOR STATOR COOLER OUTLET	PT	DMCW	6	10	Kg/Cm²	39	60	F	18			STAND ALONE		

NOTE:FOR SHCEME NO 14 AND 16 -WHERE EVER DESIGN PRESSURE >=40KG/CM2-TWO DRAIN VALVES SHALL BE PROVIDED PER LINE.

PROJECT: SAGARADIGHI 1 X 660MW STPP UNIT#5 EXTENSION

CUSTOMER: M/s WBPDCL

CONSULTANT: M/s DCPL

HOOK UP SCHEMES

COPY RIGHT AND CONFIDENTIAL

THE INFORMATION ON THIS DOCUMENT IS THE PROPERTY OF BHARAT HEAVY ELECTRICALS LIMITED. IT MUST NOT BE USED DIRECTLY OR INDIRECTLY IN ANY WAY DETRIMENTAL TO THE INTEREST OF THE COMPANY.

REVISIONS :	APPROVED BY		
	DIPTENDU GHOSH		
	PREPARED BY	ISSUED	DATE
	RAJESH LINGUTLA	416	09/10/23

REVISION NO	DATE	COPY RIGHT AND CONFIDENTIAL The information on this document is the property of Bharat Heavy Electricals Limited. It must not be used directly or indirectly in anyway detrimental to the interest to the Company.		

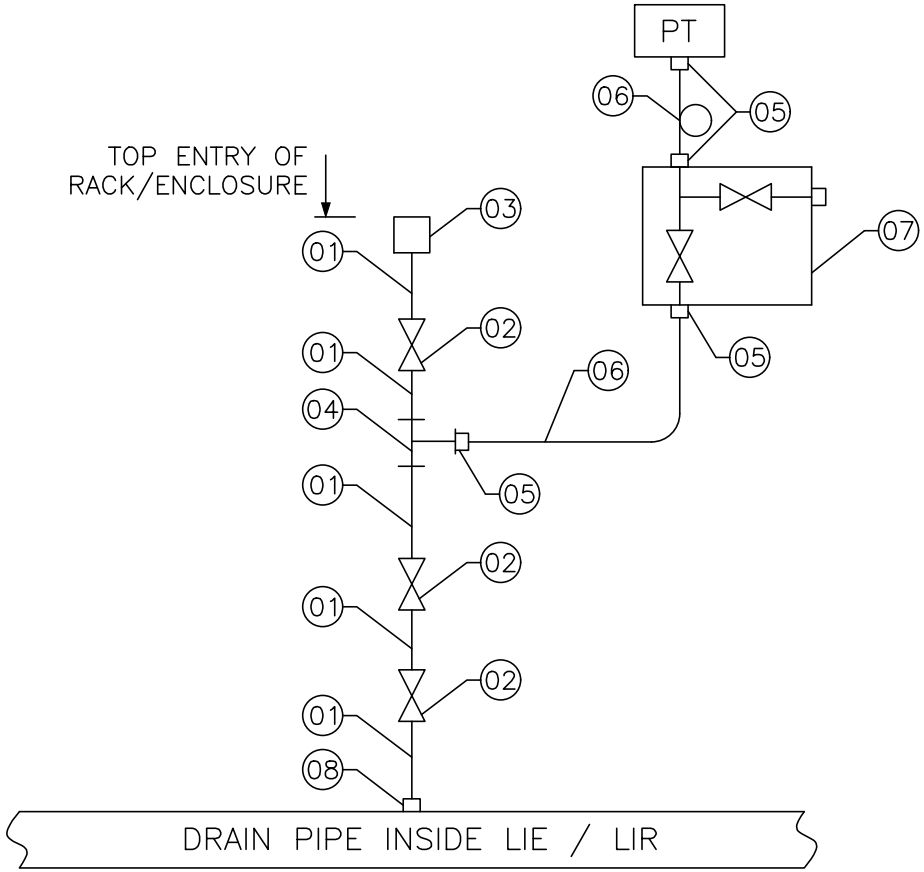

NOTES:

01. "TRANSMITTER BELOW SOURCE"
02. FOR BILL OF MATERIAL REFER PAGE 03 OF 27.
03. DRAIN PIPE / 2" NB SCH 80 – A106 Gr. C
04. ITEM NO. 06 SHALL BE FORMED AS A SYPHON FOR SERVICES WITH MEDIUM AS STEAM.

A4 – 10

CE/416/SAGA/HUP

REV. NO. 00

PAGE NO.: 02 OF 27

ITEM NO.	ITEM DESCRIPTION	QTY / INST. (Nos.)
01	SEAMLESS PIPE MATL.: ASTM A335 P91 SIZE: 1/2" NB–XXS	A/R
02	FORGED GLOBE VALVE BODY: ASTM A182 F91 / STEM: ASTM A182 Gr. F6a SIZE: 1/2" NB–SW / CL 3000 SPL	03
03	BULKHEAD COUPLING / AS PER ANSI B16.11 MATL.: ASTM A182 F91 SIZE: 1/2" NB–SW / CL : 9000 LBS	01
04	FORGED UNEQUAL TEE/AS PER ANSI B16.11 MATL.: ASTM A182 F91 SIZE: 2 x 1/2" NB –SW X 1/2" NPTF / CL 9000LBS	01
05	MALE DFDC CONNECTOR MATL.: SS316 SIZE: 1/2" NPTM x TO SUIT 1/2" OD SS TUBE	04
06	SEAMLESS TUBE MATL.: A213 TP 316 SIZE: 1/2" OD x 2.1mm THK.	A/R
07	TWO VALVE MANIFOLD WITH DRAIN PLUG BODY: SS316, BAR STOCK PORT SIZE: 1/2" NPTF / PR. TESTING : 9000PSI	01
08	HALF COUPLING / AS PER ANSI B 16.11 MATL.: ASTM A182 F91 SIZE: 1/2" NB–SW / CL 9000 LBS	01

COPY RIGHT AND CONFIDENTIAL
The information on this document is the property of Bharat Heavy Electricals Limited.
It must not be used directly or indirectly in anyway detrimental to the interest to the Company.

DATE

REVISION NO

REVISION NO	DATE

COPY RIGHT AND CONFIDENTIAL
The information on this document is the property of Bharat Heavy Electricals Limited.
It must not be used directly or indirectly in anyway detrimental to the interest to the Company.

A4 – 10

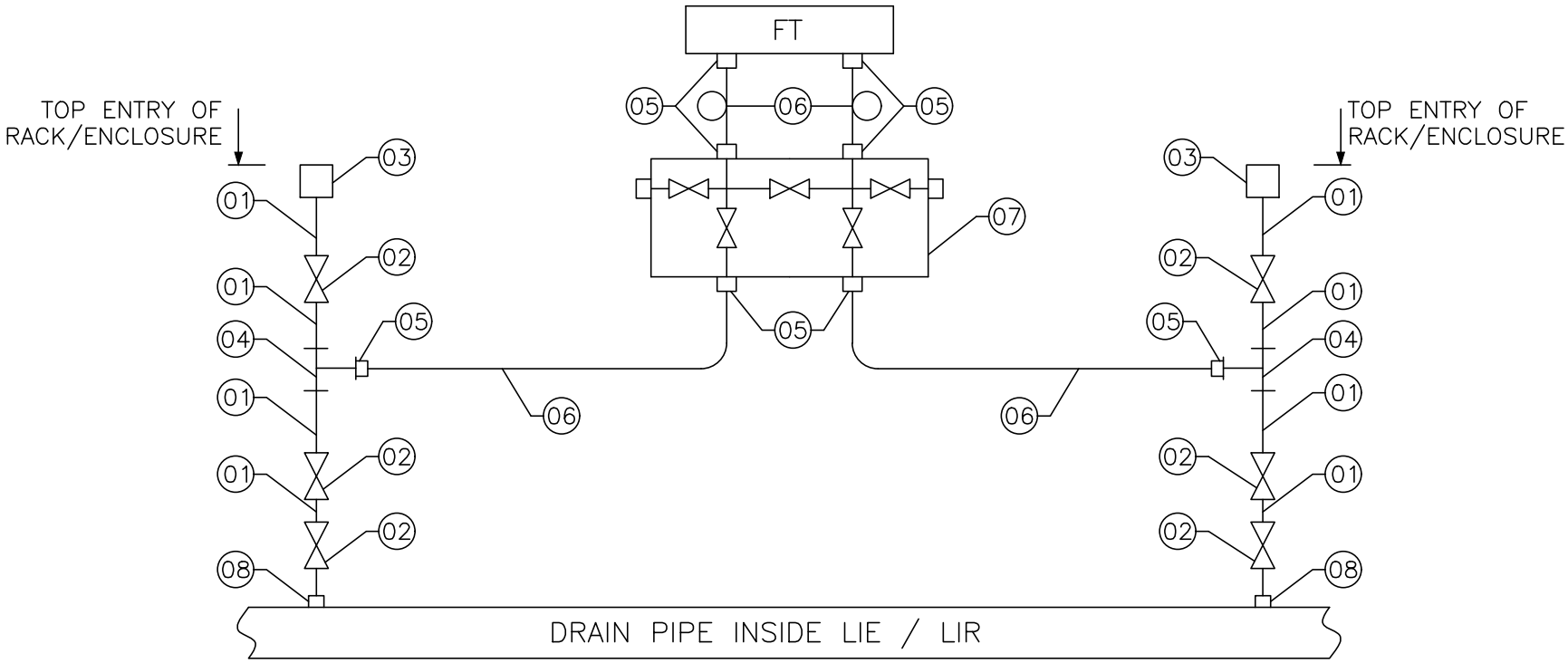

NOTES:

01. "TRANSMITTER BELOW SOURCE"
02. FOR BILL OF MATERIAL REFER PAGE 05 OF 27
03. DRAIN PIPE / 2" NB SCH 80 – A106 Gr. C
04. ITEM NO. 06 SHALL BE FORMED AS A SYPHON FOR SERVICES WITH MEDIUM AS STEAM.

CE/416/SAGA/HUP

REV. NO. 00

PAGE NO.: 04 OF 27

ITEM NO.	ITEM DESCRIPTION	QTY / INST. (Nos.)
01	SEAMLESS PIPE MATL.: ASTM A335 P91 SIZE: 1/2" NB–SCH XXS	A/R
02	FORGED GLOBE VALVE BODY: ASTM A182 F91 / STEM: ASTM A182 Gr. F6a SIZE: 1/2" NB–SW / CL 3000SPL	06
03	BULKHEAD COUPLING / AS PER ANSI B16.11 MATL.: ASTM A182 F91 SIZE: 1/2" NB–SW / CL : 9000 LBS	02
04	FORGED UNEQUAL TEE/AS PER ANSI B16.11 MATL.: ASTM A182 F91 SIZE: 2 x 1/2" NB –SW X 1/2" NPTF / CL 9000LBS	02
05	MALE DFDC CONNECTOR MATL.: SS316 SIZE: 1/2" NPTM x TO SUIT 1/2" OD SS TUBE	08
06	SEAMLESS TUBE MATL.: A213 TP 316 SIZE: 1/2" OD x 2.1mm THK.	A/R
07	FIVE VALVE MANIFOLD WITH DRAIN PLUG BODY: SS316, BAR STOCK. PORT SIZE: 1/2" NPTF / PR. TESTING : 9000PSI	01
08	HALF COUPLING / AS PER ANSI B16.11 MATL.: ASTM A182 F91 SIZE: 1/2" NB–SW / CL 9000 LBS	02

COPY RIGHT AND CONFIDENTIAL
The information on this document is the property of Bharat Heavy Electricals Limited.
It must not be used directly or indirectly in anyway detrimental to the interest to the Company.

DATE

REVISION NO

REVISION NO	DATE	COPY RIGHT AND CONFIDENTIAL The information on this document is the property of Bharat Heavy Electricals Limited. It must not be used directly or indirectly in anyway detrimental to the interest to the Company.		

A4 – 10

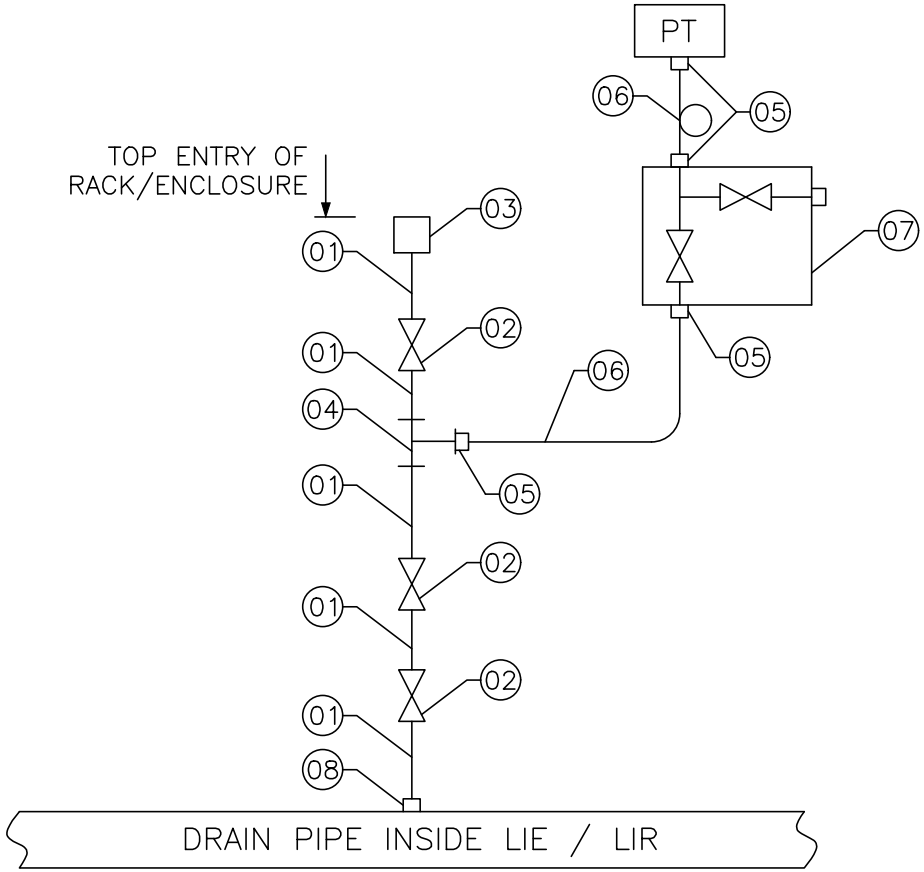

NOTES:

01. "TRANSMITTER BELOW SOURCE"
02. FOR BILL OF MATERIAL REFER PAGE 07 OF 27.
03. DRAIN PIPE / 2" NB SCH 80 – A106 Gr. C
04. ITEM NO. 06 SHALL BE FORMED AS A SYPHON FOR SERVICES WITH MEDIUM AS STEAM.

CE/416/SAGA/HUP

REV. NO. 00

PAGE NO.: 06 OF 27

ITEM NO.	ITEM DESCRIPTION	QTY / INST. (Nos.)
01	SEAMLESS PIPE MATL.: ASTM A335 P22 SIZE: 1/2" NB, SCH 160	A/R
02	FORGED GLOBE VALVE BODY: ASTM A182 F22 / STEM: ASTM A182 Gr. F6a SIZE: 1/2" NB–SW / CL 3000 SPL	03
03	BULKHEAD COUPLING / AS PER ANSI B16.11 MATL.: ASTM A182 F22 SIZE: 1/2" NB–SW / CL : 6000 LBS	01
04	FORGED UNEQUAL TEE/AS PER ANSI B16.11 MATL.: ASTM A182 F22 SIZE: 2 x 1/2" NB –SW X 1/2" NPTF / CL 6000LBS	01
05	MALE DFDC CONNECTOR MATL.: SS316 SIZE: 1/2" NPTM x TO SUIT 1/2" OD SS TUBE	04
06	SEAMLESS TUBE MATL.: A213 TP 316 SIZE: 1/2" OD x 2.1mm THK.	A/R
07	TWO VALVE MANIFOLD WITH DRAIN PLUG BODY: SS316, BAR STOCK. PORT SIZE: 1/2" NPTF / PR. TESTING : 6000PSI	01
08	HALF COUPLING / AS PER ANSI B 16.11 MATL.: ASTM A 182 F22 SIZE: 1/2" NB–SW / CL 6000 LBS	01

COPY RIGHT AND CONFIDENTIAL
The information on this document is the property of Bharat Heavy Electricals Limited.
It must not be used directly or indirectly in anyway detrimental to the interest to the Company.

DATE

REVISION NO

REVISION NO	DATE

COPY RIGHT AND CONFIDENTIAL
The information on this document is the property of Bharat Heavy Electricals Limited.
It must not be used directly or indirectly in anyway detrimental to the interest to the Company.

A4 – 10

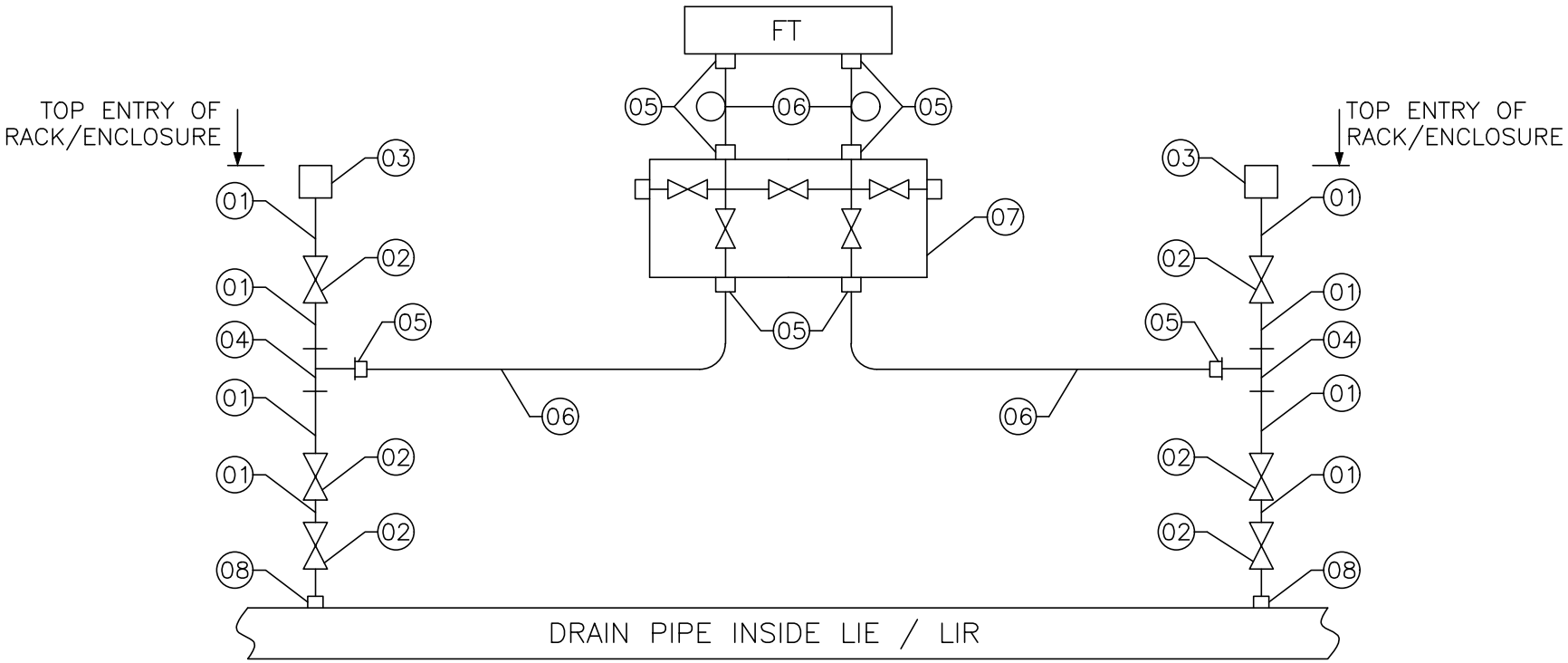

NOTES:

01. "TRANSMITTER BELOW SOURCE"
02. FOR BILL OF MATERIAL REFER PAGE 09 OF 27
03. DRAIN PIPE / 2" NB SCH 80 – A106 Gr. C
04. ITEM NO. 06 SHALL BE FORMED AS A SYPHON FOR SERVICES WITH MEDIUM AS STEAM.

CE/416/SAGA/HUP

REV. NO. 00

PAGE NO.: 08 OF 27

ITEM NO.	ITEM DESCRIPTION	QTY / INST. (Nos.)
01	SEAMLESS PIPE MATL.: ASTM A335 P22 SIZE: 1/2" NB–SCH 160	A/R
02	FORGED GLOBE VALVE BODY: ASTM A182 F22 / STEM: ASTM A182 Gr. F6a SIZE: 1/2" NB–SW / CL 3000SPL	06
03	BULKHEAD COUPLING / AS PER ANSI B16.11 MATL.: ASTM A182 F22 SIZE: 1/2" NB–SW / CL : 6000 LBS	02
04	FORGED UNEQUAL TEE/AS PER ANSI B16.11 MATL.: ASTM A182 F22 SIZE: 2 x 1/2" NB –SW X 1/2" NPTF / CL 6000LBS	02
05	MALE DFDC CONNECTOR MATL.: SS316 SIZE: 1/2" NPTM x TO SUIT 1/2" OD SS TUBE	08
06	SEAMLESS TUBE MATL.: A213 TP 316 SIZE: 1/2" OD x 2.1mm THK.	A/R
07	FIVE VALVE MANIFOLD WITH DRAIN PLUG BODY: SS316, BAR STOCK. PORT SIZE: 1/2" NPTF / PR. TESTING : 6000PSI	01
08	HALF COUPLING / AS PER ANSI B 16.11 MATL.: ASTM A 182 F22 SIZE: 1/2" NB–SW / CL 6000 LBS	02

COPY RIGHT AND CONFIDENTIAL
The information on this document is the property of Bharat Heavy Electricals Limited.
It must not be used directly or indirectly in anyway detrimental to the interest to the Company.

DATE

REVISION NO

REVISION NO	DATE

COPY RIGHT AND CONFIDENTIAL
The information on this document is the property of Bharat Heavy Electricals Limited.
It must not be used directly or indirectly in anyway detrimental to the interest to the Company.

A4 – 10

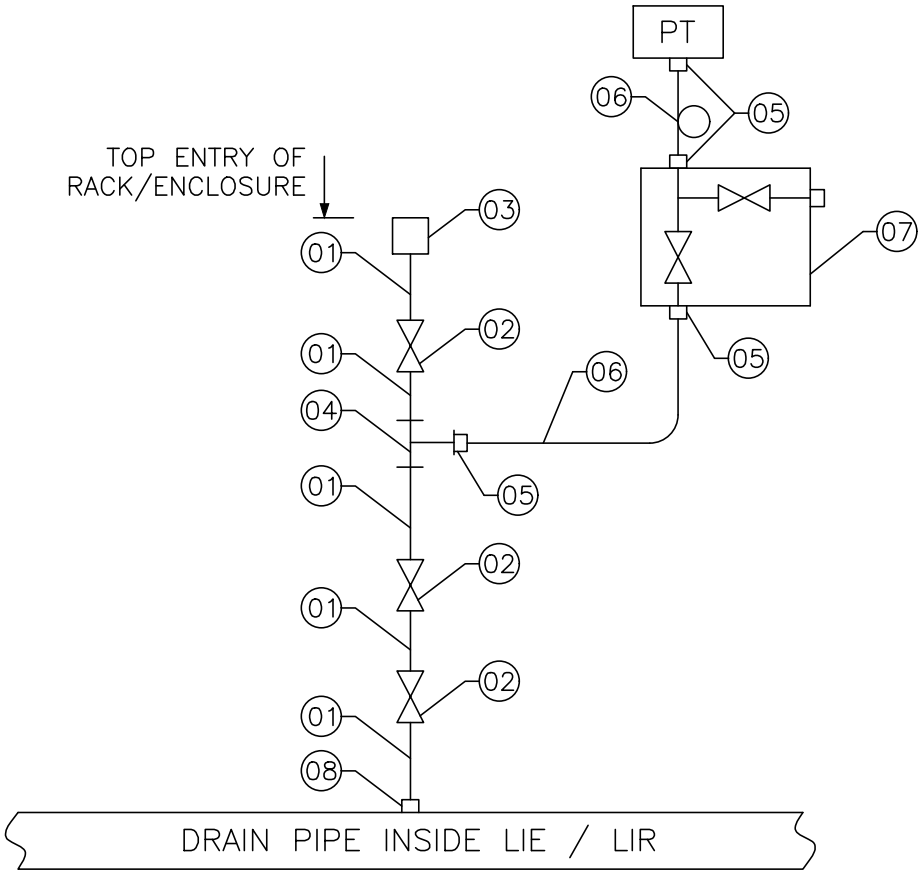

NOTES:

01. "TRANSMITTER BELOW SOURCE"
02. FOR BILL OF MATERIAL REFER PAGE 11 OF 27
03. DRAIN PIPE / 2" NB SCH 80 – A106 Gr. C
04. ITEM NO. 06 SHALL BE FORMED AS A SYPHON FOR SERVICES WITH MEDIUM AS STEAM.

CE/416/SAGA/HUP

REV. NO. 00

PAGE NO.: 10 OF 27

ITEM NO.	ITEM DESCRIPTION	QTY / INST. (Nos.)
01	SEAMLESS PIPE MATL.: ASTM A106 Gr.C SIZE: 1/2" NB–SCH 160	A/R
02	FORGED GLOBE VALVE BODY: ASTM A105 / STEM: ASTM A182 Gr. F6a SIZE: 1/2" NB–SW / CL 2500	03
03	BULKHEAD COUPLING / AS PER ANSI B16.11 MATL.: ASTM A105 SIZE: 1/2" NB–SW / CL : 6000 LBS	01
04	FORGED UNEQUAL TEE/AS PER ANSI B16.11 MATL.: ASTM A105 SIZE: 2 x 1/2" NB –SW X 1/2" NPTF / CL 6000LBS	01
05	MALE DFDC CONNECTOR MATL.: SS316 SIZE: 1/2" NPTM x TO SUIT 1/2" OD SS TUBE	04
06	SEAMLESS TUBE MATL.: A213 TP 316 SIZE: 1/2" OD x 2.1mm THK.	A/R
07	TWO VALVE MANIFOLD WITH DRAIN PLUG BODY: SS316, BAR STOCK. PORT SIZE: 1/2" NPTF / PR. TESTING : 6000PSI	01
08	HALF COUPLING / AS PER ANSI B16.11 MATL.: ASTM A105 SIZE: 1/2" NB–SW / CL 6000 LBS	01

COPY RIGHT AND CONFIDENTIAL
The information on this document is the property of Bharat Heavy Electricals Limited.
It must not be used directly or indirectly in anyway detrimental to the interest to the Company.

DATE

REVISION NO

REVISION NO	DATE

COPY RIGHT AND CONFIDENTIAL
The information on this document is the property of Bharat Heavy Electricals Limited.
It must not be used directly or indirectly in anyway detrimental to the interest to the Company.

A4 – 10

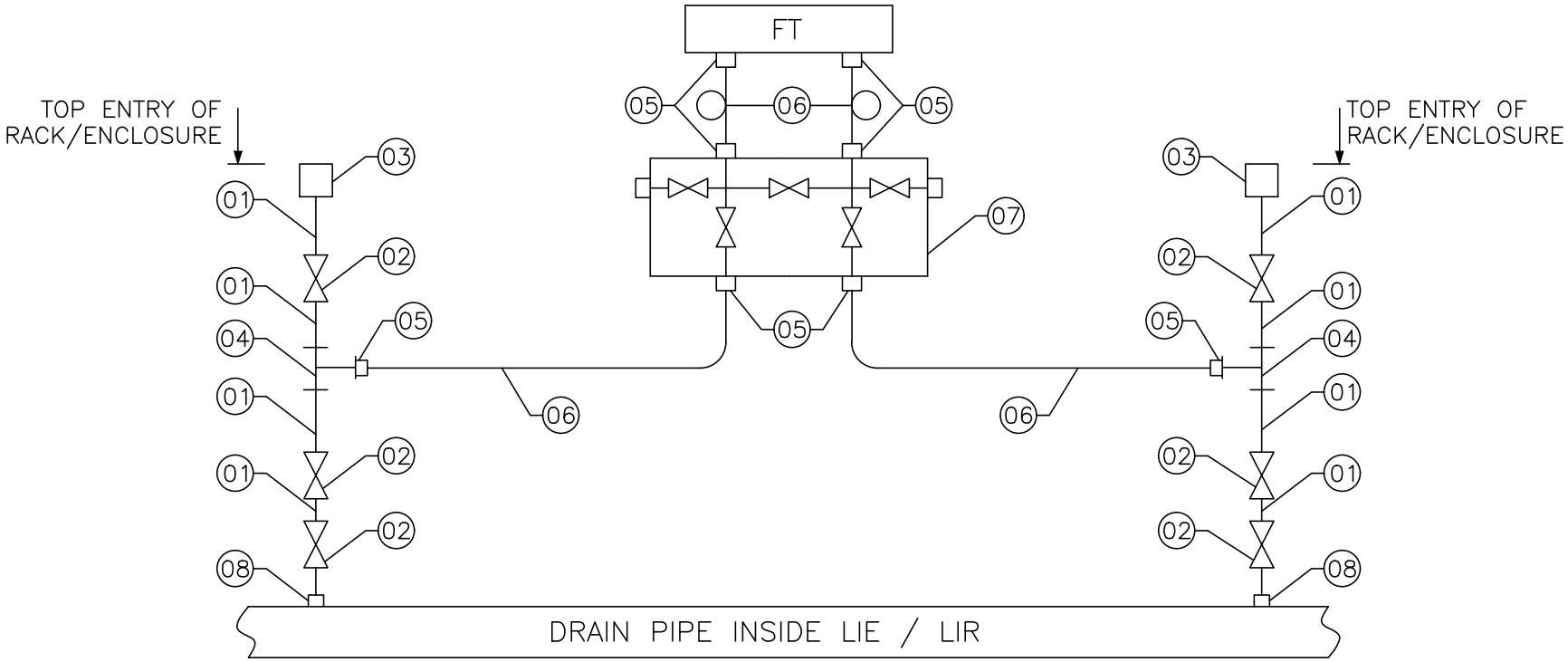

NOTES:

01. "TRANSMITTER BELOW SOURCE"
02. FOR BILL OF MATERIAL REFER PAGE 13 OF 27.
03. DRAIN PIPE / 2" NB SCH 80 – A106 Gr. C
04. ITEM NO. 06 SHALL BE FORMED AS A SYPHON FOR SERVICES WITH MEDIUM AS STEAM.

CE/416/SAGA/HUP

REV. NO. 00

PAGE NO.: 12 OF 27

ITEM NO.	ITEM DESCRIPTION	QTY / INST. (Nos.)
01	SEAMLESS PIPE MATL.: ASTM A106 Gr.C SIZE: 1/2" NB–SCH 160	A/R
02	FORGED GLOBE VALVE BODY: ASTM A105 / STEM: ASTM A182 Gr. F6a SIZE: 1/2" NB–SW / CL 2500	06
03	BULKHEAD COUPLING / AS PER ANSI B16.11 MATL.: ASTM A105 SIZE: 1/2" NB–SW / CL : 6000 LBS	02
04	FORGED UNEQUAL TEE/AS PER ANSI B16.11 MATL.: ASTM A105 SIZE: 2 x 1/2" NB –SW X 1/2" NPTF / CL 6000LBS	02
05	MALE DFDC CONNECTOR MATL.: SS316 SIZE: 1/2" NPTM x TO SUIT 1/2" OD SS TUBE	08
06	SEAMLESS TUBE MATL.: A213 TP 316 SIZE: 1/2" OD x 2.1mm THK.	A/R
07	FIVE VALVE MANIFOLD WITH DRAIN PLUG BODY: SS316, BAR STOCK. PORT SIZE: 1/2" NPTF / PR. TESTING : 6000PSI	01
08	HALF COUPLING / AS PER ANSI B 16.11 MATL.: ASTM A105 SIZE: 1/2" NB–SW / CL 6000 LBS	02

COPY RIGHT AND CONFIDENTIAL
The information on this document is the property of Bharat Heavy Electricals Limited.
It must not be used directly or indirectly in anyway detrimental to the interest to the Company.

DATE

REVISION NO

REVISION NO	DATE	COPY RIGHT AND CONFIDENTIAL The information on this document is the property of Bharat Heavy Electricals Limited. It must not be used directly or indirectly in anyway detrimental to the interest to the Company.		

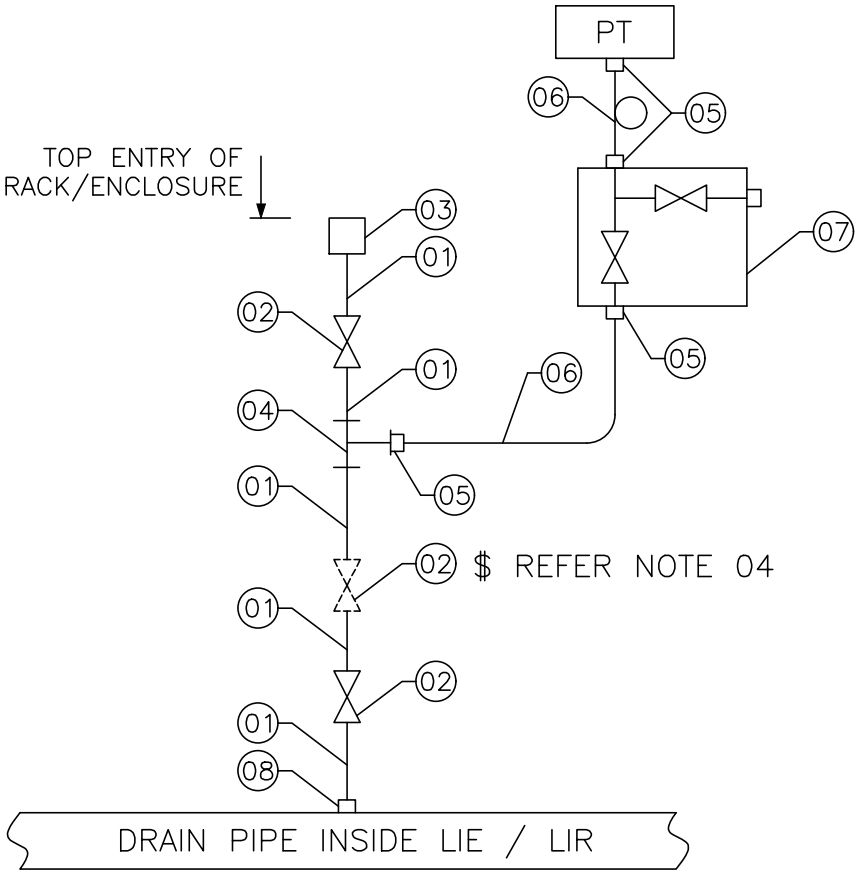

NOTES:

01. "TRANSMITTER BELOW SOURCE"
02. FOR BILL OF MATERIAL REFER PAGE 15 OF 27.
03. DRAIN PIPE / 2" NB SCH 80 – A106 Gr. C
04. ITEM 02 QUANTITY SHALL BE 3 Nos. FOR TAGS. WITH DESIGN PRESSURE >= 40kg/Cm2
05. ITEM NO. 06 SHALL BE FORMED AS A SYPHON FOR SERVICES WITH MEDIUM AS STEAM.

A4 – 10

CE/416/SAGA/HUP

REV. NO. 00

PAGE NO.: 14 OF 27

ITEM NO.	ITEM DESCRIPTION	QTY / INST. (Nos.)
01	SEAMLESS PIPE MATL.: ASTM A106 Gr.C SIZE: 1/2" NB–SCH 80	A/R
02$	FORGED GLOBE VALVE BODY: ASTM A105 / STEM: ASTM A182 Gr. F6a SIZE: 1/2" NB–SW / CL 800	A/R
03	BULKHEAD COUPLING / AS PER ANSI B16.11 MATL.: ASTM A105 SIZE: 1/2" NB–SW / CL : 3000 LBS	01
04	FORGED UNEQUAL TEE/AS PER ANSI B16.11 MATL.: ASTM A105 SIZE: 2 x 1/2" NB –SW X 1/2" NPTF / CL 3000 LBS	01
05	MALE DFDC CONNECTOR MATL.: SS316 SIZE: 1/2" NPTM x TO SUIT 1/2" OD SS TUBE	04
06	SEAMLESS TUBE MATL.: A213 TP 316 SIZE: 1/2" OD x 2.1mm THK.	A/R
07	TWO VALVE MANIFOLD WITH DRAIN PLUG BODY: SS316, BAR STOCK. PORT SIZE: 1/2" NPTF / PR. TESTING : 3000 PSI	01
08	HALF COUPLING / AS PER ANSI B16.11 MATL.: ASTM A105 SIZE: 1/2" NB–SW / CL 3000 LBS	01

COPY RIGHT AND CONFIDENTIAL
The information on this document is the property of Bharat Heavy Electricals Limited.
It must not be used directly or indirectly in anyway detrimental to the interest to the Company.

DATE

REVISION NO

REVISION NO	DATE

COPY RIGHT AND CONFIDENTIAL
The information on this document is the property of Bharat Heavy Electricals Limited.
It must not be used directly or indirectly in anyway detrimental to the interest to the Company.

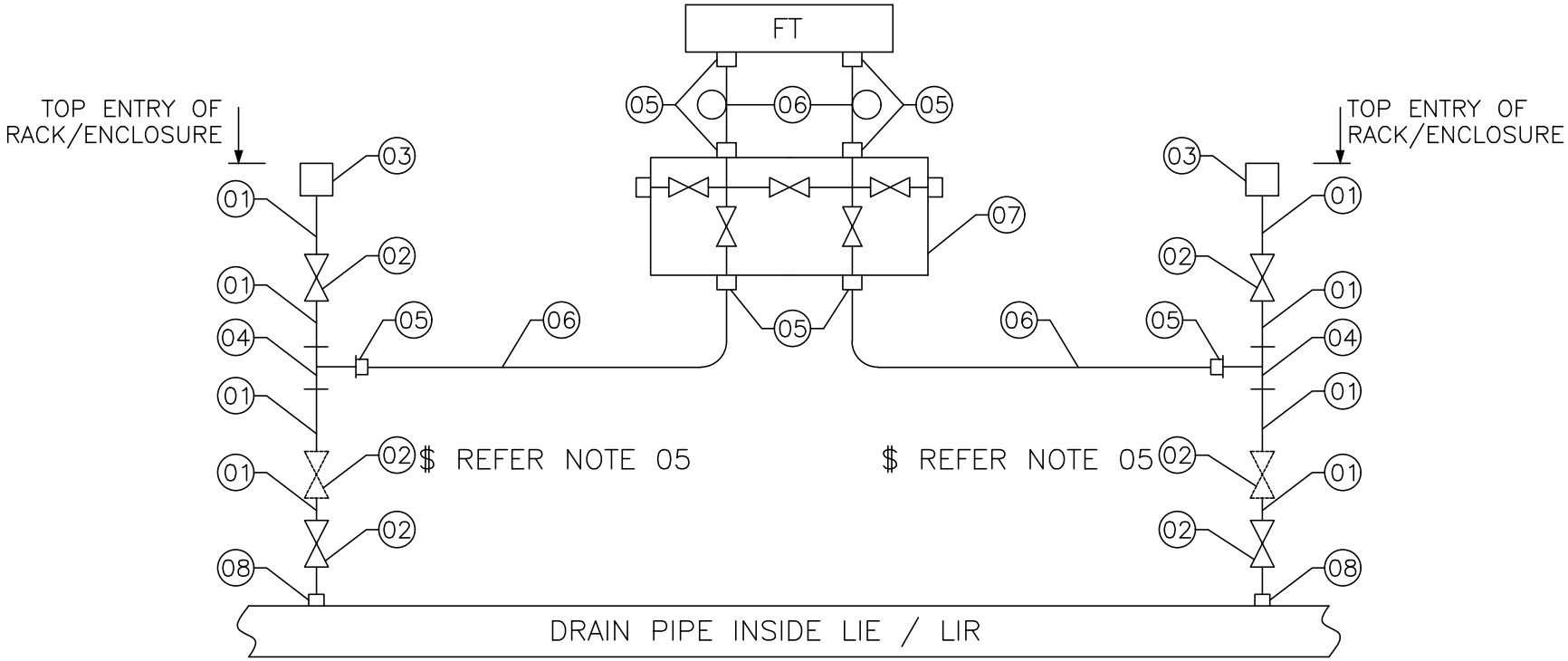

NOTES:

01. "TRANSMITTER BELOW SOURCE"
02. FOR BILL OF MATERIAL REFER PAGE 17 OF 27
03. DRAIN PIPE / 2" NB SCH 80 – A106 Gr. C
04. ITEM 02 QUANTITY SHALL BE 6 Nos. FOR TAGS. WITH DESIGN PRESSURE >= 40kg/Cm2
05. ITEM NO. 06 SHALL BE FORMED AS A SYPHON FOR SERVICES WITH MEDIUM AS STEAM.

A4 – 10

CE/416/SAGA/HUP

REV. NO. 00

ITEM NO.	ITEM DESCRIPTION	QTY / INST. (Nos.)
01	SEAMLESS PIPE MATL.: ASTM A106 Gr.C SIZE: 1/2" NB–SCH 80	A/R
02$	FORGED GLOBE VALVE BODY: ASTM A105 / STEM: ASTM A182 Gr. F6a SIZE: 1/2" NB–SW / CL 800	A/R
03	BULKHEAD COUPLING / AS PER ANSI B16.11 MATL.: ASTM A105 SIZE: 1/2" NB–SW / CL : 3000 LBS	02
04	FORGED UNEQUAL TEE/AS PER ANSI B16.11 MATL.: ASTM A105 SIZE: 2 x 1/2" NB –SW X 1/2" NPTF / CL 3000LBS	02
05	MALE DFDC CONNECTOR MATL.: SS316 SIZE: 1/2" NPTM x TO SUIT 1/2" OD SS TUBE	08
06	SEAMLESS TUBE MATL.: A213 TP 316 SIZE: 1/2" OD x 2.1mm THK.	A/R
07	FIVE VALVE MANIFOLD WITH DRAIN PLUG BODY: SS316, BAR STOCK. PORT SIZE: 1/2" NPTF / PR. TESTING : 3000PSI	01
08	HALF COUPLING / AS PER ANSI B 16.11 MATL.: ASTM A105 SIZE: 1/2" NB–SW / CL 3000 LBS	02

COPY RIGHT AND CONFIDENTIAL
The information on this document is the property of Bharat Heavy Electricals Limited.
It must not be used directly or indirectly in anyway detrimental to the interest to the Company.

DATE

REVISION NO

REVISION NO	DATE

COPY RIGHT AND CONFIDENTIAL
The information on this document is the property of Bharat Heavy Electricals Limited.
It must not be used directly or indirectly in anyway detrimental to the interest to the Company.

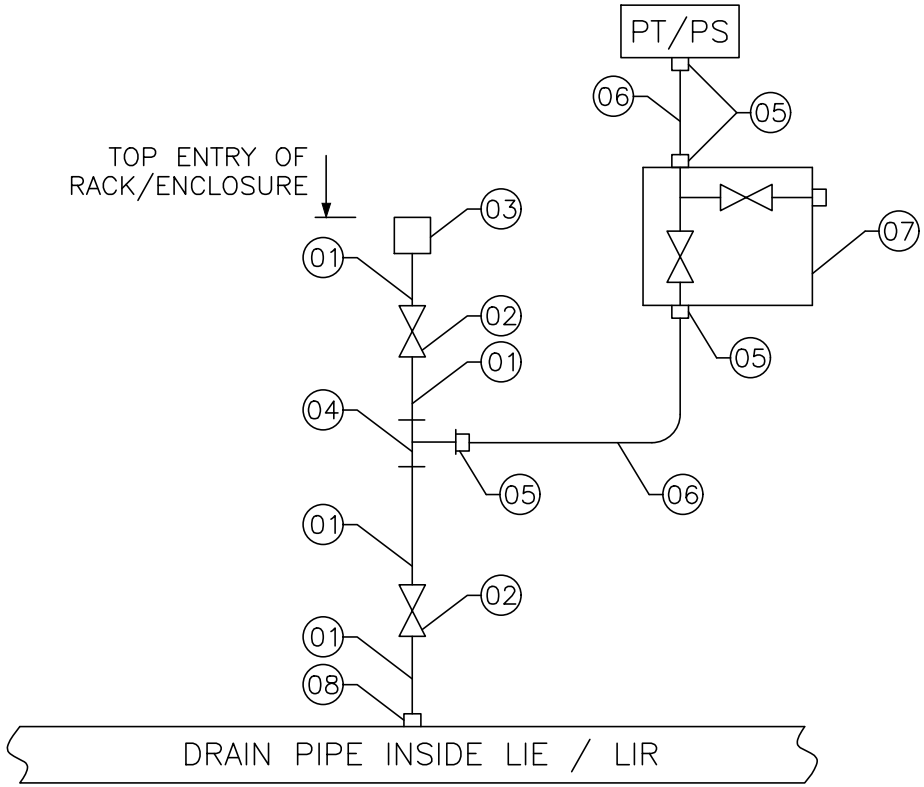

NOTES:

01. "TRANSMITTER BELOW SOURCE"
02. FOR BILL OF MATERIAL REFER PAGE 19 OF 27.
03. DRAIN PIPE / 2" NB SCH 80 – A106 Gr. C

A4 – 10

CE/416/SAGA/HUP

REV. NO. 00

PAGE NO.: 18 OF 27

ITEM NO.	ITEM DESCRIPTION	QTY / INST. (Nos.)
01	SEAMLESS PIPE MATL.: ASTM 312 TP316 SIZE: 1/2" NB–SCH 40	A/R
02	FORGED GLOBE VALVE BODY: ASTM A182 F316 / STEM :ASTM A182 Gr F6A SIZE: 1/2" NB–SW / CL : 800	02
03	BULK HEAD UNION / COUPLING /AS PER ANSI B16.11 MATL.: ASTM A182 F316 SIZE: 1/2" NB–SW / CL : 3000 LBS	01
04	FORGED UNEQUAL TEE / AS PER ANSI B16.11 MATL.: ASTM A182 F316 SIZE: 2 x 1/2" NB – SW X 1/2" NPTF / CL : 3000 LBS	01
05	MALE DFDC CONNECTOR MATL.: SS316 SIZE: 1/2" NPTM x TO SUIT 1/2" OD SS TUBE	04
06	SEAMLESS TUBE MATL.: A213 TP 316 SIZE: 1/2" OD x 2.1mm THK.	A/R
07	TWO VALVE MANIFOLD WITH DRAIN PLUG MATL.: SS316, BAR STOCK. PORT SIZE: 1/2" NPTF / PR. TESTING : 3000PSI	01
08	HALF COUPLING / AS PER ANSI B 16.11 MATL.: ASTM A 182 F316 SIZE: 1/2" NB SW / CL 3000 LBS	01

COPY RIGHT AND CONFIDENTIAL
The information on this document is the property of Bharat Heavy Electricals Limited.
It must not be used directly or indirectly in anyway detrimental to the interest to the Company.

DATE

REVISION NO

REVISION NO	DATE

COPY RIGHT AND CONFIDENTIAL
The information on this document is the property of Bharat Heavy Electricals Limited.
It must not be used directly or indirectly in anyway detrimental to the interest to the Company.

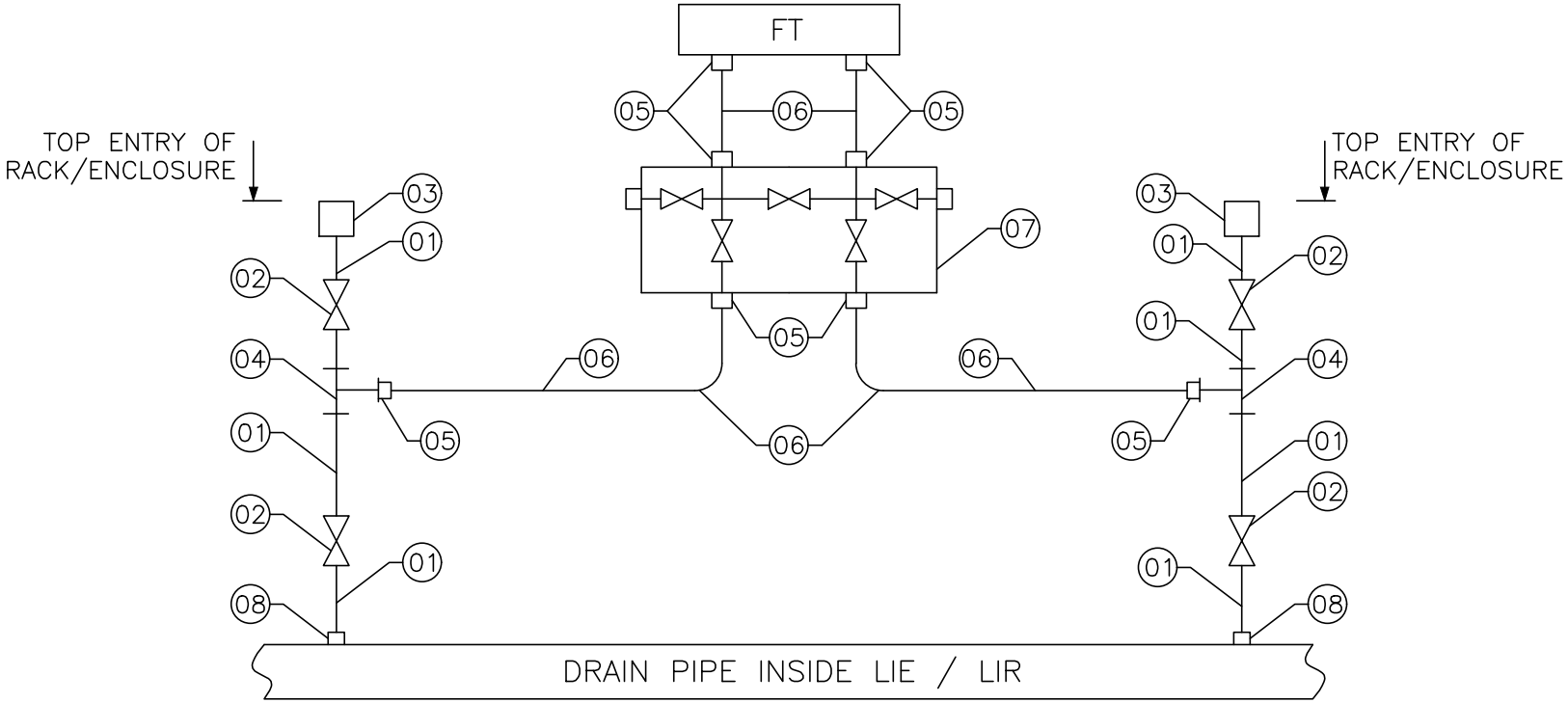

NOTES:

01. "TRANSMITTER BELOW SOURCE"
02. FOR BILL OF MATERIAL REFER PAGE 21 OF 27.
03. DRAIN PIPE / 2" NB SCH 80 – A106 Gr. C

A4 – 10

CE/416/SAGA/HUP

REV. NO. 00

PAGE NO.: 20 OF 27

ITEM NO.	ITEM DESCRIPTION	QTY / INST. (Nos.)
01	SEAMLESS PIPE MATL.: ASTM 312 TP316 SIZE: 1/2" NB–SCH 40	A/R
02	FORGED GLOBE VALVE BODY: ASTM A182 F316 / STEM :ASTM A182 Gr F6A SIZE: 1/2" NB–SW / CL : 800	04
03	BULK HEAD UNION / COUPLING /AS PER ANSI B16.11 MATL.: ASTM A182 F316 SIZE: 1/2" NB–SW / CL : 3000 LBS	02
04	FORGED UNEQUAL TEE/AS PER ANSI B16.11 MATL.: ASTM A182 F316 SIZE: 2 x 1/2" NB – SW X 1/2" NPTF / CL : 3000 LBS	02
05	MALE DFDC CONNECTOR MATL.: SS316 SIZE: 1/2" NPTM x TO SUIT 1/2" OD SS TUBE	08
06	SEAMLESS TUBE MATL.: A213 TP 316 SIZE: 1/2" OD x 2.1mm THK.	A/R
07	FIVE VALVE MANIFOLD WITH DRAIN PLUG MATL.: SS316, BAR STOCK. PORT SIZE: 1/2" NPTF / PR. TESTING : 3000PSI	02
08	HALF COUPLING / AS PER ANSI B 16.11 MATL.: ASTM A 182 F316 SIZE: 1/2" NB–SW / CL 3000 LBS	02

COPY RIGHT AND CONFIDENTIAL
The information on this document is the property of Bharat Heavy Electricals Limited.
It must not be used directly or indirectly in anyway detrimental to the interest to the Company.

DATE

REVISION NO

REVISION NO	DATE

COPY RIGHT AND CONFIDENTIAL
The information on this document is the property of Bharat Heavy Electricals Limited.
It must not be used directly or indirectly in anyway detrimental to the interest to the Company.

A4 – 10

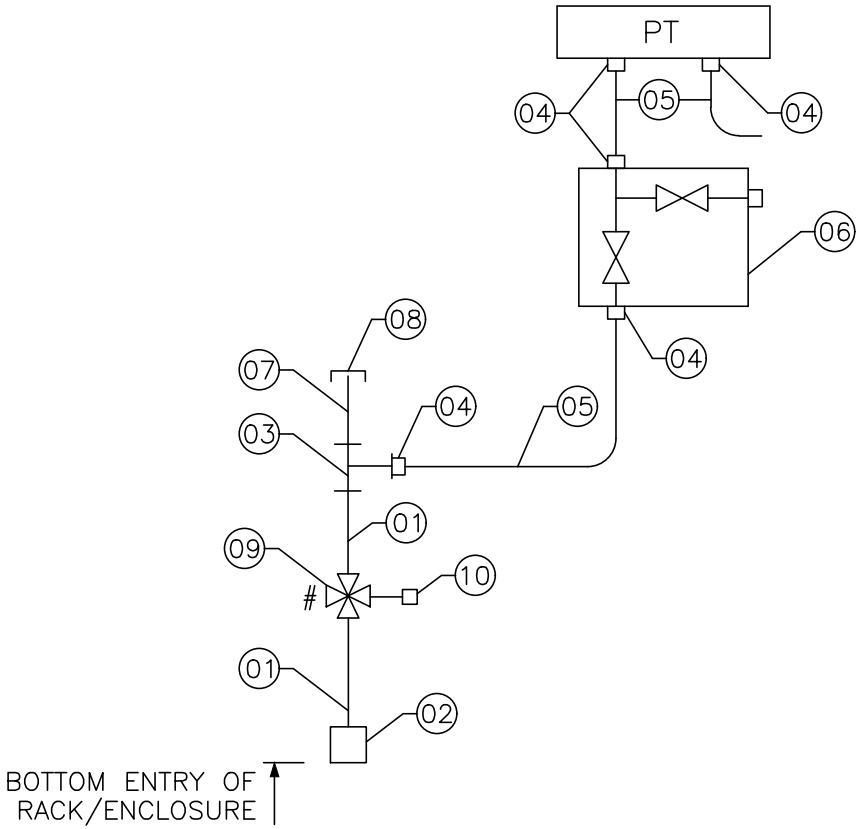

NOTES:

01. "TRANSMITTER ABOVE SOURCE"
02. FOR BILL OF MATERIAL REFER PAGE 23 OF 27.
03. FOR INTERMITTANT PURGING REFER PAGE 26 & 27 OF 27.

CE/416/SAGA/HUP

REV. NO. 00

PAGE NO.: 22 OF 27

ITEM NO.	ITEM DESCRIPTION	QTY / INST. (Nos.)
01	SEAMLESS PIPE MATL.: ASTM A106 Gr.B/C SIZE: 3/4" NB–SCH 80	A/R
02	BULKHEAD COUPLING / AS PER ANSI B16.11 MATL.: ASTM A105 SIZE: 3/4" NB–SW / CL : 3000 LBS	01
03	FORGED UNEQUAL TEE/AS PER ANSI B16.11 MATL.: ASTM A105 SIZE: 2 x 3/4" NB –SW X 1/2" NPTF / CL 3000LBS	01
04	MALE DFDC CONNECTOR MATL.: SS316 SIZE: 1/2" NPTM x TO SUIT 1/2" OD SS TUBE	05
05	SEAMLESS TUBE MATL.: A213 TP 316 SIZE: 1/2" OD x 1.1mm THK.	A/R
06	TWO VALVE MANIFOLD WITH DRAIN PLUG BODY: SS316, BAR STOCK. PORT SIZE: 1/2" NPTF / PR. TESTING : 1500PSI	01
07	NIPPLE MATL.: ASTM A106 Gr.B/C SIZE: 3/4" NB–SCH 80	01
08	CAP MATL.: ASTM A105 SIZE: ONE 3/4" NPTF	01
09	FOUR WAY VALVE MATL.: ASTM A105 / RATING CLASS 800 SIZE: (2 x 3/4" NB–SW) x (2 x 1/2" NPTF)	01
10	QUICK DISCONNECTING FITTING MATL.: SS 304 SIZE.:1/2" NPTM	01

COPY RIGHT AND CONFIDENTIAL
The information on this document is the property of Bharat Heavy Electricals Limited.
It must not be used directly or indirectly in anyway detrimental to the interest to the Company.

DATE

REVISION NO

REVISION NO	DATE

COPY RIGHT AND CONFIDENTIAL
The information on this document is the property of Bharat Heavy Electricals Limited.
It must not be used directly or indirectly in anyway detrimental to the interest to the Company.

A4 - 10

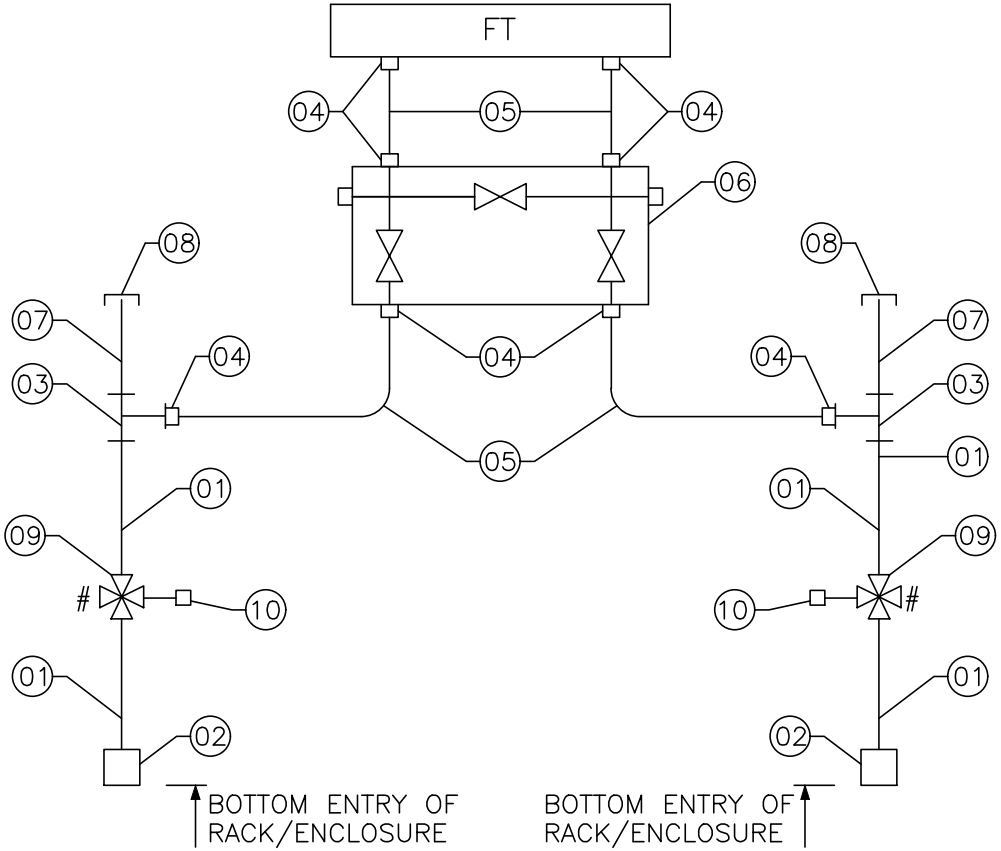

NOTES:

01. FOR BILL OF MATERIAL REFER PAGE 25 OF 27.

02. FOR INTERMITTENT PURGING REFER PAGE 26 & 27 OF 27.

CE/416/SAGA/HUP

REV. NO. 00

ITEM NO.	ITEM DESCRIPTION	QTY / INST. (Nos.)
01	SEAMLESS PIPE MATL.: ASTM A106 Gr.B/C SIZE: 3/4" NB–SCH 80	A/R
02	BULKHEAD COUPLING / AS PER ANSI B16.11 MATL.: ASTM A105 SIZE: 3/4" NB–SW / CL : 3000 LBS	02
03	FORGED UNEQUAL TEE/AS PER ANSI B16.11 MATL.: ASTM A105 SIZE: 2 x 3/4" NB –SW X 1/2" NPTF / CL 3000LBS	02
04	MALE DFDC CONNECTOR MATL.: SS316 SIZE: 1/2" NPTM x TO SUIT 1/2" OD SS TUBE	08
05	SEAMLESS TUBE MATL.: A213 TP 316 SIZE: 1/2" OD x 1.1mm THK.	A/R
06	THREE VALVE MANIFOLD WITH DRAIN PLUG BODY: SS316, BAR STOCK. PORT SIZE: 1/2" NPTF / PR. TESTING : 1500PSI	01
07	NIPPLE MATL.: ASTM A106 Gr.B/C SIZE: 3/4" NB–SCH 80	02
08	CAP MATL.: ASTM A105 SIZE: ONE / 3/4" NPTF	02
09	FOUR WAY VALVE MATL.: ASTM A105 / RATING CLASS 800 SIZE: (2 x 3/4" NB–SW) x (2 x 1/2" NPTF)	02
10	QUICK DISCONNECTING FITTING MATL.: SS 304 SIZE.:1/2" NPTM	02

COPY RIGHT AND CONFIDENTIAL
The information on this document is the property of Bharat Heavy Electricals Limited.
It must not be used directly or indirectly in anyway detrimental to the interest to the Company.

DATE

REVISION NO

REVISION NO	DATE

COPY RIGHT AND CONFIDENTIAL
The information on this document is the property of Bharat Heavy Electricals Limited.
It must not be used directly or indirectly in anyway detrimental to the interest to the Company.

A4 – 10

TYPICAL AIR PURGING SCHEME

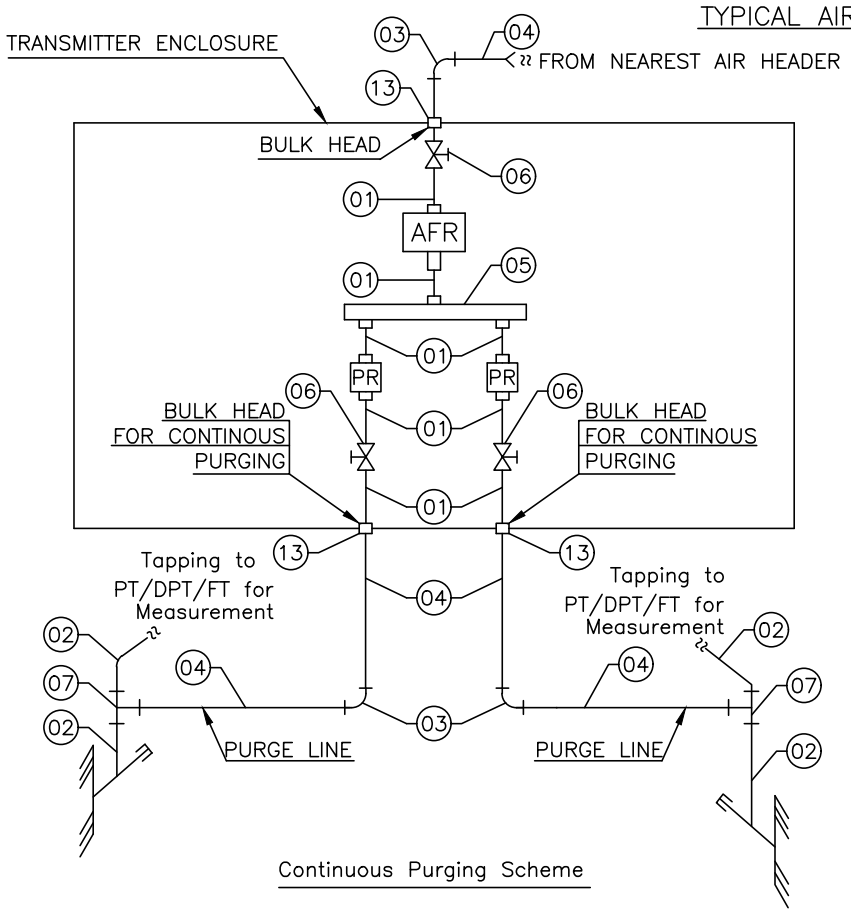

Continuous Purging Scheme

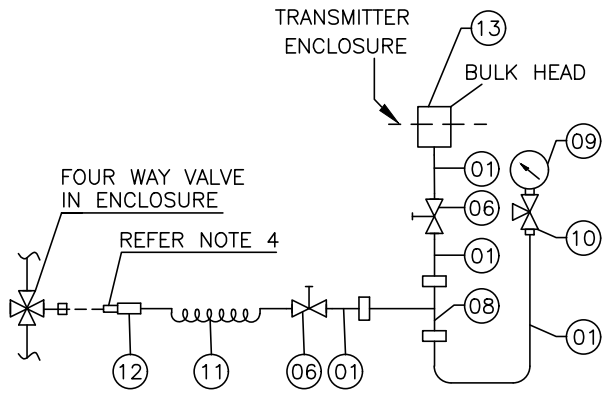

Intermittent Purging Scheme

NOTES:

01. ABBREVIATIONS

PT	–	PRESSURE TRANSMITTERS
DPT / FT	–	DIFF. PRESSURE/FLOW TRANSMITTERS
AFR	–	AIR FILTER REGULATOR
PR	–	PURGE ROTAMETER

02. ABOVE SCHEME IS TYPICAL. PURGE ROTAMETERS WILL BE ONE NO. FOR EACH OF PURGE LINE AS SHOWN.
03. AIR FILTER REGULATORS SHALL BE SET BETWEEN 0.4 TO 0.6 KG/CM2 APPROX.
04. THIS QUICK DISCONNECT FITTING IS CONNECTED TO FOUR WAY VALVE WHEREVER INTERMITTENT PURGING IS CALLED IN SCHEMES.
05. FOR BILL OF MATERIAL REFER PAGE 27 OF 27.

CE/416/SAGA/HUP

REV. NO. 00

ITEM NO.	ITEM DESCRIPTION
01	SEAMLESS TUBE MATL.: SS 316 SIZE: 1/2" OD TUBE X 1.1 mm THICK
02	SEAMLESS PIPE MATL.: ASTM A 106 Gr. C SIZE: 3/4" NB SCH 80
03	GALVANISED ELBOW MATL.: A 105 SIZE: 1/2" NPTF
04	GI PIPE MATL.: IS 1239 HEAVY GRADE SIZE: 1/2" NB
05	AIR HEADER MATL.: SS304 SIZE: 1" NB PIPE
06	BALL VALVE MATL.: A 105 SIZE: TO SUIT 1/2" OD SS TUBE
07	UNEQUAL TEE MATL.: A 105 SIZE: 2 X 3/4" NB–SW X 1/2" NPTF
08	EQUAL TEE BODY: SS316 PORT SIZE: TO SUIT 1/2" OD SS TUBE
09	PR. GAUGE CONNECTION:. 1/2" NPTM SIZE: 4" DIAL SIZE / RANGE : 0 – 10 Kg / Cm2
10	3 WAY GUAGE COCK MATL.:SS304 SIZE: 1/2" NPTF x TO SUIT 1/2" SS TUBE
11	NYLON HOSE WITH SS BRAIDING TO SUIT 1/2" END CONNECTION PR TESTING 10 kg/cm2
12	QUICK DISCONNECTING FITTING MATL:. SS304 SIZE: MALE END CONN. TO SUIT 1/2" OD CONNECTION
13	BULK HEAD UNION MATL:. ASTM A105 SIZE: 1/2" NPTF X 1/2" NPTF

COPY RIGHT AND CONFIDENTIAL
The information on this document is the property of Bharat Heavy Electricals Limited.
It must not be used directly or indirectly in anyway detrimental to the interest to the Company.

DATE

REVISION NO

COPY RIGHT AND CONFIDENTIAL

THE INFORMATION ON THIS DOCUMENT IS THE PROPERTY OF BHARAT HEAVY ELECTRICALS LIMITED. IT MUST NOT BE USED DIRECTLY OR INDIRECTLY IN ANY WAY DETRIMENTAL TO THE INTEREST OF THE COMPANY.

PROJECT: SAGARADIGHI 1 X 660MW STPP UNIT#5 EXTENSION

CUSTOMER: M/s WBPDCL

CONSULTANT: M/s DCPL

COMPONENT VENDOR LIST

REVISIONS :

APPROVED BY		
DIPTENDU GHOSH		
PREPARED BY	**ISSUED**	**DATE**
RAJESH LINGUTLA	416	09/10/23

COPY RIGHT AND CONFIDENTIAL
THE INFORMATION ON THIS DOCUMENT IS THE PROPERTY OF BHARAT HEAVY ELECTRICALS LIMITED . IT MUST NOT BE USED DIRECTLY OR INDIRECTLY IN ANY WAY DETRIMENTAL TO THE INTEREST OF THE COMPANY.

VENDOR LIST

Sl No	Item Description	Approved Vendors
1	Socket Weld Fittings	VK INDUSTRIES, BENGALURU.
		VIKAS INDUSTRIES, NOIDA.
		METPRESS ENGINEERING WORKS,KOLKATA
		BALDOTA VALVE AND FITTINGS PVT LTD,MUMBAI
2	Compression Fitting	PRECISION ENGG INDUSTRIES, MUMBAI
		TROUVAY & CAUVIN FRANCE
		HOKE
		SWAGELOCK,USA
		PARKER HANNIFIN INDIA PVT. LTD.,CHENGAL PATTU,TAMILANADU
3	Instrument Valves	BHARAT HEAVY ELECTRICALS LIMITED VALVES DIVISION, TIRUCHIRAPALLI, TAMILANADU.
		PRECISION ENGG INDUSTRIES, MUMBAI
		EXCEL HYDRO-PNEUMATICS PVT LTD,MUMBAI
		METPRESS ENGINEERING WORKS,KOLKATA
		BALDOTA VALVE AND FITTINGS PVT LTD,MUMBAI
		INSTRUMENTATION LIMITED,PALGHAT
4	Valve Manifolds	FLOW TECH, KOLKATA.
		EXCEL HYDRO-PNEUMATICS PVT LTD,MUMBAI
		METPRESS ENGINEERING WORKS,KOLKATA
		BALDOTA VALVE AND FITTINGS PVT LTD,MUMBAI
		MCIRO PRECISION PRODUCTS PVT LTD, FARIDABAD.
		Parker HANNIFIN INDIA PVT. LTD, LEBANON (M/s Super techical dealer for Parker)
5	Air Filter Regulator	JRU INSTRUMENTS (FORMERLY PLACKA)
		PARKER ,HANNIFIN,LEBANON
		SHAVO NORGREN(INDIA)PVT LTD BANGALORE
6	Bypass Rotameter	EUREKA INDLEQUIPMENT PVT., LTD., PUNE
		PLACKA INSTRUMENTS INDIA PVT LTD CHENNAI
		FLUIDYNE INSTRUMENTS PVT. LTD. CHEMBUR, MUMBAI
		INSTRUMENTATION ENGINEERS PVT LTD JEEDIMATLA
		TRANSDUCER & CONTROL PVT LTD HYDERABAD

COPY RIGHT AND CONFIDENTIAL
THE INFORMATION ON THIS DOCUMENT IS THE PROPERTY OF BHARAT HEAVY ELECTRICALS LIMITED . IT MUST NOT BE USED DIRECTLY OR INDIRECTLY IN ANY WAY DETRIMENTAL TO THE INTEREST OF THE COMPANY.

VENDOR LIST

Sl No	Item Description	Approved Vendors
7	Impulse Pipes (Alloy steel), (Carbon Steel), (Stainless Steel)	BHARAT HEAVY ELECTRICALS LTD, TRICHY (Only for CS and AS Pipes)
		JINDAL SAW LTD, CHENNAI (Only for CS and AS Pipes)
		SUMITOMO CORPORATION ,JAPAN (Only AS, CS & SS Pipes)
		TPS TECHNITUBE ROHREN WERKE GMBH, GERMANY all pipes(Only AS, CS & SS Pipes)
		INDIAN SEAMLESS METAL TUBES LTD (Only for CS Pipes)
		RATNAMANI METALS & TUBES LTD, AHMADABAD(only for SS Pipes &Tubes)
8	Instrument cables	SPECIAL CALBES PVT LTD, UTTRAKHAND
		SUYOG ELECTRICALS LTD, GUJARAT
		DELTON CABLE LTD,NEW DELHI
		KEI INDUSTRIES LTD,BHIWADI
		POLYCAB WIRES PVT LTD, DAMAN.
		ADVANCE CABLE TECHNOLOGIES LTD,BANGALORE
		TEMPSENS INSTRUMENT PVT LTD, UDAIPUR.
		THERMO CABLES, HYDERABAD.
		ELKAY TELELINKS,FARIDABAD

Note: Bidders Can Propose additional sub component vendors for above items with filling supplier registration format (https://www.bhel.com/supplier-registration), However if same is not approved by customer/BHEL, vendors to provide sub component makes from the approved list without any price impact.

A4-10		Ref : CE/416/LIE/LIR/OGA1
		Rev. : 00
		Page : 01 of 04

PROJECT: SAGARADIGHI 1 X 660MW STPP UNIT#5 EXTENSION

CUSTOMER: M/s WBPDCL

CONSULTANT: M/s DCPL

COPY RIGHT AND CONFIDENTIAL

THE INFORMATION ON THIS DOCUMENT IS THE PROPERTY OF BHARAT HEAVY ELECTRICALS LIMITED. IT MUST NOT BE USED DIRECTLY OR INDIRECTLY IN ANY WAY DETRIMENTAL TO THE INTEREST OF THE COMPANY.

SCHEMATIC DRAWINGS
FOR
LOCAL INSTRUMENT ENCLOSURE / RACKS
(LIE / LIR)

REVISIONS :	APPROVED BY		
	DIPTENDU GHOSH		
	PREPARED BY	ISSUED	DATE
	RAJESH LINGUTLA	416	09/10/23

FIRST ANGLE PROJECTION

(ALL DIMENSIONS ARE IN mm)

DRG. No. CE/416/LIE/LIR/OGA1

COPYRIGHT AND CONFIDENTIAL
THE INFORMATION ON THIS DOCUMENT IS THE PROPERTY OF BHARAT HEAVY ELECTRICALS LTD. IT MUST NOT BE USED DIRECTLY OR INDIRECTLY IN ANY WAY DETRIMENTAL TO THE INTEREST OF THE COMPANY.

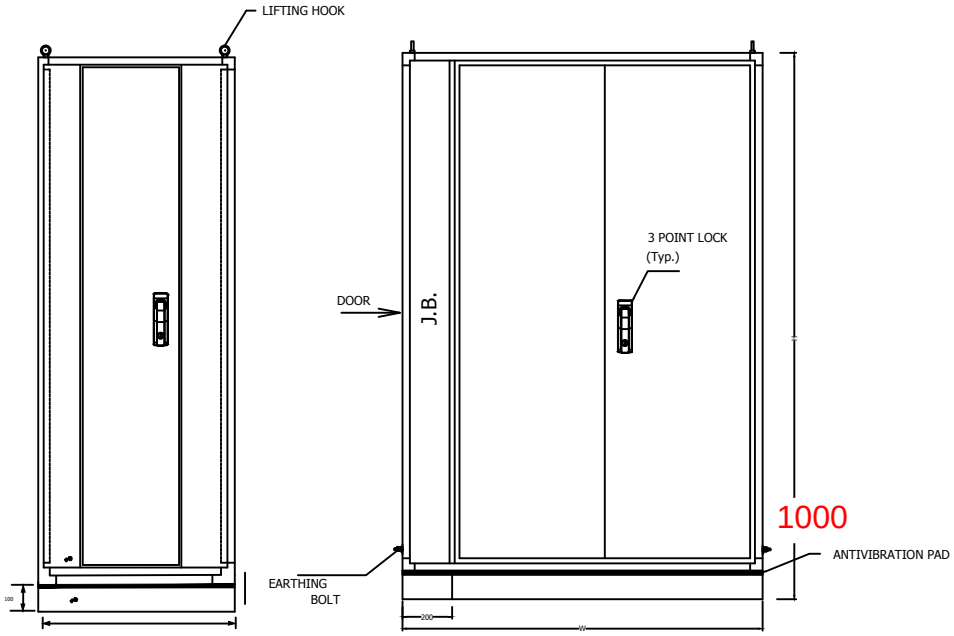

LH SIDE VIEW

FRONT VIEW

NOTES:–

1. ALL SHEETs ARE 3.0mm CRCA SHEET
2. ALL DOORS WILL BE FLUSH / CONCEALED TYPE
3. BASE FRAME SHALL BE MADE OF ISMC 100
4. BULK HEAD PLATE FOR TOP & BOTTOM SHALL BE PROVIDED
5. CABLE GLAND PLATE OF THICKNESS 3.0 mm. CRCA SHEET SHALL BE PROVIDED TOP AND BOTTOM OF J.B
6. ENCLOSURE SHALL BE OF IP–65 PROTECTION CLASS
7. TERMINAL SHALL BE PROVIDED IN SIDE THE J.B. AS PER TRANSMITTER GROUPING
8. DOORS SHALL BE THREE POINT LOCKING FOR FRONT AND REAR DOOR AND SIDE DOOR LEAF
9. GASKET SHALL BE PROVIDED BETWEEN BULK HEAD PLATE & ENCLOSURE
10. EARTH BUS BAR 25x6mm TINNED COPPER SHALL BE USED
11. 2 Nos. CFL 11W,230V AC WITH FIXTURE SHALL BE PROVIDED
12. DRAIN PIPE SLOPE WILL BE 1 : 25 APPROX.
13. POWER SOCKET SHALL BE PROVIDED IN J.B. OF ENCLOSURE

LIE TYPE	H	W	D
A	2200	1450	1000
B	2200	1100	1000
C	2200	800	1000

PROD / PROJ :

CUSTOMER:

REV.	DATE	ALTERED / CHECKED / APPROVED	REV.	DATE	ALTERED / CHECKED / APPROVED

	NAME	SIGN	DATE
DRAWN	HKS		15.04.2015
CHECKED	RKL		15.04.2015
APPROVED	AM		15.04.2015

DEPT. BPE | CODE 416

BHARAT HEAVY ELECTRICALS LIMITED.
ELECTRONICS DIVISION, BANGALORE

TITLE: OGA–FOR–LIE

No. OF SHEETS: 04

SHEET No.: 02

WBS. No.

DRG. No. CE/416/LIE/LIR/OGA1

REV 00

REF. DRG. No.

SIGN. & DATE

INVENTORY No.

FORM No. A3–03

A3 SIZE

FIRST ANGLE PROJECTION

(ALL DIMENSIONS ARE IN mm)

DRG. No. CE/416/LIE/LIR/OGA1

COPYRIGHT AND CONFIDENTIAL
THE INFORMATION ON THIS DOCUMENT IS THE PROPERTY OF BHARAT HEAVY ELECTRICALS LTD. IT MUST NOT BE USED DIRECTLY OR INDIRECTLY IN ANY WAY DETRIMENTAL TO THE INTEREST OF THE COMPANY.

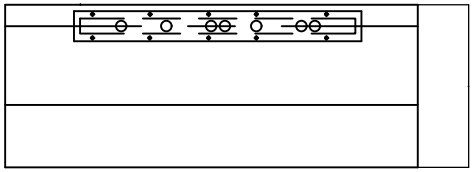

TOP VIEW

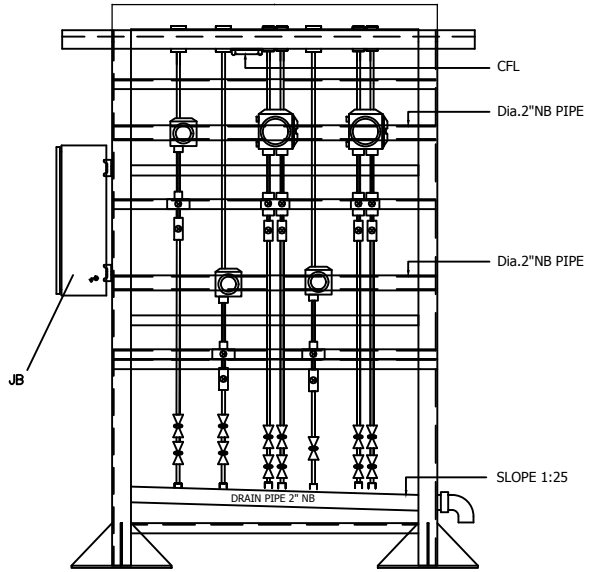

FRONT VIEW

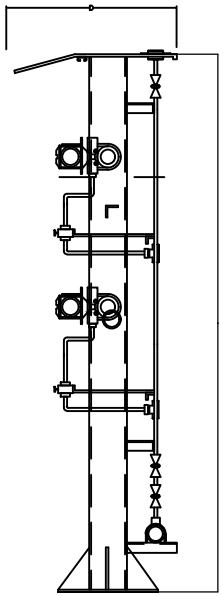

SIDE VIEW

NOTES:

1. JB TO BE LOCATED ON ONE SIDE OF THE LIR.
2. LIR's ARE WITH 2 LEGS.
3. SUPPORTING LEG SHALL BE MADE OF CHANNEL
4. BULK HEAD PLATE SHALL BE PROVIDED AT THE TOP
5. GASKET SHALL BE PROVIDED BETWEEN BULK HEAD PLATE & RACK
6. EARTH BUS BAR 25x6mm COPPER SHALL BE USED
7. 1 No CFL 11W,230V AC WITH FIXTURE SHALL BE PROVIDED
8. POWER SOCKET SHALL BE PROVIDED IN J.B. OF RACK
9. CANAPY ASSEMBLY WITH 3 MM THICK CRCA SHEET
10. TERMINALS SHALL BE PROVIDED IN SIDE THE JB AS PER GROUPING PROVIDED

LIR TYPE	H	W	D
A	2200	1600	650
B	2200	1100	650
C	1600	800	650
D	2200	1600	650

PROD / PROJ : –

CUSTOMER: –

REV.	DATE	ALTERED –	REV.	DATE	ALTERED –
–	–	CHECKED –	–	–	CHECKED –
		APPROVED –			APPROVED –

	NAME	SIGN	DATE
DRAWN	HKS		15.04.2015
CHECKED	RKL		15.04.2015
APPROVED	AM		15.04.2015

DEPT. BPE | CODE 416

BHARAT HEAVY ELECTRICALS LIMITED.
ELECTRONICS DIVISION, BANGALORE

TITLE: OGA–FOR–LIR

No. OF SHEETS: 04

SHEET No.: 04

WBS. No. –

DRG. No. CE/416/LIE/LIR/OGA1

REV 00

REF. DRG. No. FLREF

SIGN. & DATE

INVENTORY No.

FORM No. A3–03

A3 SIZE

FIRST ANGLE PROJECTION

(ALL DIMENSIONS ARE IN mm)

DRG. No. CE/416/LIE/LIR/OGA1

COPYRIGHT AND CONFIDENTIAL
THE INFORMATION ON THIS DOCUMENT IS THE PROPERTY OF BHARAT HEAVY ELECTRICALS LTD. IT MUST NOT BE USED DIRECTLY OR INDIRECTLY IN ANY WAY DETRIMENTAL TO THE INTEREST OF THE COMPANY.

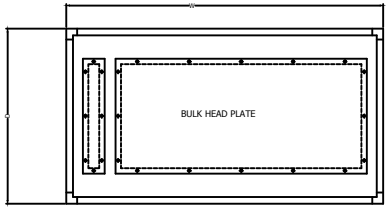

TOP VIEW

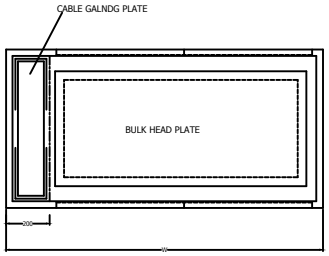

BOTTOM VIEW

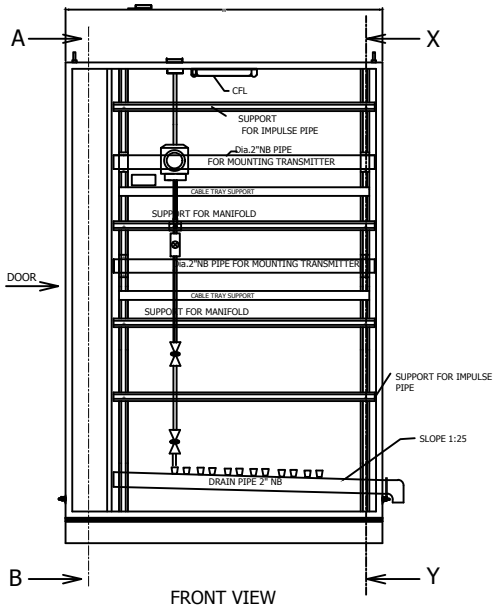

FRONT VIEW

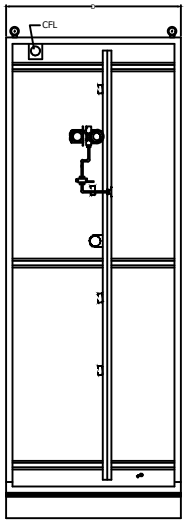

SIDE VIEW FROM X-Y

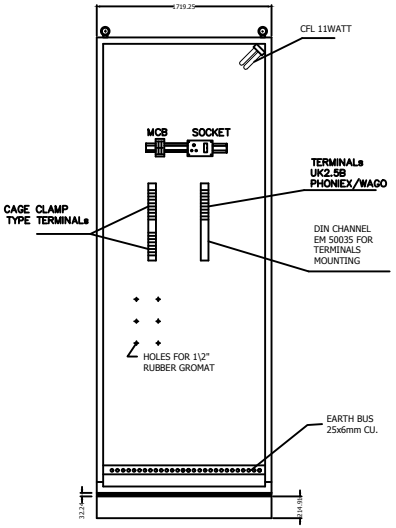

SIDE VIEW FROM A-B

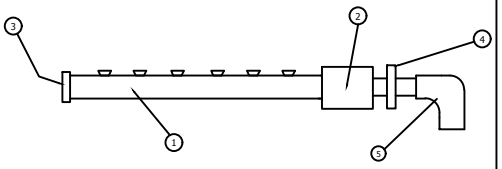

DRAIN PIPE

ITEM	DESCRIPTION	QTY.
1	2" NB ASTM A-106' SCH80/GR-C	A/R
2	2" NBSW X 1" NPT(F) COUPLING CS ASTM A105	1No.
3	2" S.W.CAP,CS ASTM A105	1No.
4	1" NPT (M) X1" BSP(M) HEX. COUPLING, CS ASTM105	1No.
5	1" BSP (F) ELBOW, CS ASTM A105	1No.

PROD / PROJ :

CUSTOMER:

REV.	DATE	ALTERED	REV.	DATE	ALTERED
		CHECKED			CHECKED
		APPROVED			APPROVED

	NAME	SIGN	DATE
DRAWN	HKS		15.04.2015
CHECKED	RKL		15.04.2015
APPROVED	AM		15.04.2015

DEPT.	CODE
BPE	416

BHARAT HEAVY ELECTRICALS LIMITED.
ELECTRONICS DIVISION, BANGALORE

TITLE: OGA–FOR–LIE

No. OF SHEETS: 04

SHEET No.: 03

WBS. No.

DRG. No. CE/416/LIE/LIR/OGA1

REV 00

REF. DRG. No.

SIGN. & DATE

INVENTORY No.

FORM No. A3–03

A3 SIZE

PROJECT: SAGARADIGHI 1 X 660MW STPP UNIT#5 EXTENSION

CUSTOMER: M/s WBPDCL

CONSULTANT: M/s DCPL

COPY RIGHT AND CONFIDENTIAL

THE INFORMATION ON THIS DOCUMENT IS THE PROPERTY OF BHARAT HEAVY ELECTRICALS LIMITED. IT MUST NOT BE USED DIRECTLY OR INDIRECTLY IN ANY WAY DETRIMENTAL TO THE INTEREST OF THE COMPANY.

TYPICAL QUALITY CHECK LIST

REVISIONS :

APPROVED BY		
DIPTENDU GHOSH		
PREPARED BY	**ISSUED**	**DATE**
RAJESH LINGUTLA	416	09/10/23

	MANUFACTURER'S NAME & ADDRESS	MANUFACTURING QUALITY PLAN	
		ITEM : LOCAL INSTRUMENT ENCLOSURE & LOCAL INSTRUMENT RACK	QP Ref NO.: CE/416/LIE-LIR/QP REV. : 00 DT. :05.10.2023 PAGE : 02 OF 06

S. NO.	COMPONENTS & OPERATIONS	CHARACTERISTICS	CLASS	TYPE OF CHECK	QUANTUM OF CHECK	REFERENCE DOCUMENT	ACCEPTANCE NORMS	FORMAT OF RECORD	AGENCY D*	M	C	E	REMARKS
1	2	3	4	5	6	7	8	9		**10			11
(A)	***MATERIAL***												
1	CRCA SHEET	A) MATERIAL	MAJOR	CHEMICAL COMPOSITION	SAMPLE	IS-513 APP.DRG	IS-513	M.T.C./Q.A.REP.		V	V	V	
		B) THICKNESS	MAJOR	MEASUREMENT	100%	APP.DRG	APP.DRG	M.T.C./Q.A.REP.		P	V	V	
		C) HARDNESS	MAJOR	STRENGTH	SAMPLE	IS-513	IS-513	M.T.C./Q.A.REP.		V	V	V	
		D) SURFACE FINISH	MAJOR	VISUAL	100%	IS-513	IS-513	M.T.C./Q.A.REP.		P	V	V	
2	MS C- CHANNELS / MS ANGLE	A) DIMENSION	MAJOR	VISUAL	100%	APP.DRG/ F.S.	APP.DRG/ F.S.	M.T.C./Q.A.REP.		P	V	V	
		B) SURFACE DEFECTS	MAJOR	VISUAL	100%	APP.DRG/ F.S.	APP.DRG/ F.S.	M.T.C./Q.A.REP.		V	V	V	
		C) STRAIGHTNESS	MAJOR	MESUERMENT	100%	APP.DRG/ F.S.	APP.DRG/ F.S.	M.T.C./Q.A.REP.		V	V	V	
3	GASKET	A) DIMENSION	MAJOR	MEASUREMENT	SAMPLE	APP.DRG/ F.S.	APP.DRG/ F.S.	M.T.C./Q.A.REP.		P	V	V	
		B) HARDNESS/SHORE HARDNESS	MAJOR	MEASUREMENT	SAMPLE	APP.DRG/ F.S.	APP.DRG/ F.S.	M.T.C.		V	V	V	
4	TERMINALS	A) TYPE, SIZE & MAKE	MAJOR	VISUAL	100%	APP.DRG	APP.DRG	M.T.C./Q.A.REP.		P	V	V	

		LEGEND : * RECORDS, INDENTIFIED WITH `TICK' SHALL BE ESSENTIALLY INCLUDED BY CONTRACTOR IN QA DOCUMENTATION. ** M : MANUFACTURER/ SUBCONTRACTOR C: CONTRACTOR/ NOMINATED INSPECTION AGENCY E : END USER INDICATE `P' PERFORM, `W' WITNESS AND `V' VERIFICATION AS APPROPRIATE "CHP" END USER SHALL IDENTIFIED IN COLUMN `E'	FOR END USER :	DOC. NO.
MANUFACTURER /SUBCONTRACTOR	CONTRACTOR			
SIGNATURE			REVIEWED BY	NAME & SIGN OFAPPROVING AUTHORITY WITH SEAL

	MANUFACTURER'S NAME & ADDRESS	MANUFACTURING QUALITY PLAN	
		ITEM : LOCAL INSTRUMENT ENCLOSURE & LOCAL INSTRUMENT RACK	QP Ref NO.: CE/416/LIE-LIR/QP REV. : 00 DT. : 05.10.2023 PAGE : 03 OF 06

S. NO.	COMPONENTS & OPERATIONS	CHARACTERISTICS	CLASS	TYPE OF CHECK	QUANTUM OF CHECK	REFERENCE DOCUMENT	ACCEPTANCE NORMS	RECORD		M	C	E	REMARKS
1	2	3	4	5	6	7	8	9	D*		**10		11
5	PVC WIRE/ CABLE	A) TYPE, SIZE, MAKE	MAJOR	MEASUREMENT	SAMPLE	IS 694/APPD. APP.DRG	IS 694/APPD. APP.DRG	M.T.C./Q.A.REP.		P	V	V	
6	PAINT	A) SHADE	MAJOR	VISUAL	SAMPLE	APP. DRG	APP. DRG	M.T.C./Q.A.REP.		P	V	V	
		B) FINISH	MAJOR	VISUAL	SAMPLE	APP. DRG	APP. DRG	M.T.C./Q.A.REP.		P	V	V	
7	FLEXIBLE CONDUIT / M.S. CABLE TRAY	A) TYPE, SIZE & MAKE	MAJOR	VISUAL	SAMPLE	APP.DRG	APP.DRG	M.T.C./Q.A.REP.		P	V	V	
(B)	***COMPONENTS ****												* TYPE / MODEL /RANGE OF COMPONENTS AS PER BOM OF LIE/ LIR .
1	VALVES, MANIFOLDS	MECHANICAL	MAJOR	A)CHEM. TEST	SAMPLE	SUPPLIER CAT./ APP.DRG	SUPPLIER CAT./ APP.DRG	M.T.C./Q.A.REP.		V	V	V	
				B)FUNCTIONAL	100%	-DO-	-DO-	M.T.C./Q.A.REP.		P	V	V	
				C) DIMENSION	100%/SAM.	-DO-	-DO-	M.T.C./Q.A.REP.		P	V	V	
				D)HYDROSTA-TIC	10%	-DO-	-DO-	M.T.C./Q.A.REP.		V	V	V	
2	FITTINGS	MECHANICAL	MAJOR	A)CHEM. TEST	SAMPLE	-DO-	-DO-	M.T.C./Q.A.REP.		V	V	V	
				B) DIMENSION	100%/SAM.	-DO-	-DO-	M.T.C./Q.A.REP.		P	V	V	
				C)HYDROSTA-TIC	10%	-DO-	-DO-	M.T.C./Q.A.REP.		V	V	V	
3.a	PIPES	MECHANICAL	MAJOR	A)CHEM. & PHY. TEST	SAMPLE	-DO-	-DO-	M.T.C./Q.A.REP. M.T.C./Q.A.REP.		V	V	V	
				B) DIMENSION	100%/ SAM.	-DO-	-DO-	M.T.C./Q.A.REP.		P	V	V	

		LEGEND : * RECORDS, INDENTIFIED WITH `TICK' SHALL BE ESSENTIALLY INCLUDED BY CONTRACTOR IN QA DOCUMENTATION. ** M : MANUFACTURER/ SUBCONTRACTOR C: CONTRACTOR/ NOMINATED INSPECTION AGENCY E : END USER INDICATE `P' PERFORM, `W' WITNESS AND `V' VERIFICATION AS APPROPRIATE "CHP" END USER SHALL IDENTIFIED IN COLUMN `E'	FOR END USER :	DOC. NO.
MANUFACTURER /SUBCONTRACTOR	CONTRACTOR			
SIGNATURE			REVIEWED BY	NAME & SIGN OFAPPROVING AUTHORITY WITH SEAL

MANUFACTURER'S NAME & ADDRESS	MANUFACTURING QUALITY PLAN	
	ITEM : LOCAL INSTRUMENT ENCLOSURE & LOCAL INSTRUMENT RACK	QP Ref NO.: CE/416/LIE-LIR/QP REV. : 00 DT. : 05.10.2023 PAGE : 04 OF 06

S. NO.	COMPONENTS & OPERATIONS	CHARACTERISTICS	CLASS	TYPE OF CHECK	QUANTUM OF CHECK	REFERENCE DOCUMENT	ACCEPTANCE NORMS	RECORD	D*	M	C	E	REMARKS
1	2	3	4	5	6	7	8	9		**10			11
3.b	TUBES	MECHANICAL	MAJOR	A)CHEM. & PHY. TEST	SAMPLE	SUPPLIER CAT./ APP.DRG	SUPPLIER CAT./ APP.DRG	M.T.C./Q.A.REP.		V	V	V	
				B) DIMENSION	100%	-DO-	-DO-	M.T.C./Q.A.REP.		P	V	V	
				C) HYDROSTA-TIC	10%	-DO-	-DO-	M.T.C./Q.A.REP.		P	V	V	
(C)	**INPROCESS**												
1	FABRICATED/CUBICLE AND COMPONENTS	A) DIMENSION	CRITICAL	MEASUREMENT	100%	APP.DRG	APP.DRG	Q.A. REPORT		P	V	V	
		B) LIFTING FACILITY	CRITICAL	VISUAL	100%	APP.DRG	APP.DRG	Q.A. REPORT		P	V	V	
		C) CABLE ENTRY	CRITICAL	VISUAL	100%	APP.DRG	APP. APP.DRG	Q.A. REPORT		P	V	V	
		D) STRAIGHTNESS / WAVINESS	CRITICAL	VISUAL	100%					P	V	V	
		E) GASKET ARGMNT.	CRITICAL	VISUAL	100%	APP.DRG	APP.DRG	Q.A. REPORT		P	V	V	
		F) DEBURRING	CRITICAL	VISUAL	100%	APP.DRG	APP.DRG	Q.A. REPORT		P	V	V	
		G) WELDING	CRITICAL	VISUAL	100%	APP.DRG	APP.DRG	Q.A. REPORT		P	V	V	
		H) REMOVAL OF WELDING SLAGS	CRITICAL	VISUAL	100%	APP.DRG	APP.DRG	Q.A. REPORT		P	V	V	

		LEGEND : * RECORDS, INDENTIFIED WITH `TICK' SHALL BE ESSENTIALLY INCLUDED BY CONTRACTOR IN QA DOCUMENTATION. ** M : MANUFACTURER/ SUBCONTRACTOR C: CONTRACTOR/ NOMINATED INSPECTION AGENCY E : END USER INDICATE `P' PERFORM, `W' WITNESS AND `V' VERIFICATION AS APPROPRIATE "CHP" END USER SHALL IDENTIFIED IN COLUMN `E'	FOR END USER :
MANUFACTURER /SUBCONTRACTOR	CONTRACTOR		
SIGNATURE			REVIEWED BY

DOC. NO.

NAME & SIGN OFAPPROVING AUTHORITY WITH SEAL

	MANUFACTURER'S NAME & ADDRESS	MANUFACTURING QUALITY PLAN	
		ITEM : LOCAL INSTRUMENT ENCLOSURE & LOCAL INSTRUMENT RACK	QP Ref NO.: CE/416/LIE-LIR/QP REV. : 00 DT. : 05.10.2023 PAGE : 05 OF 06

S. NO.	COMPONENTS & OPERATIONS	CHARACTERISTICS	CLASS	TYPE OF CHECK	QUANTUM OF CHECK	REFERENCE DOCUMENT	ACCEPTANCE NORMS	FORMAT OF RECORD		AGENCY M	C	E	REMARKS
1	2	3	4	5	6	7	8	9	D*	**10			11
2	PRETREATMENT (7 TANK PROCESS)	A) DEGREASING	CRITICAL	VISUAL	100%	IS- 6005/F.S.	IS- 6005/F.S.	Q.A. REPORT		P	V	V	
		B) DERUSTING	CRITICAL	VISUAL	100%	IS- 6005/F.S.	IS- 6005/F.S.	Q.A. REPORT		P	V	V	
		C) PHOSPHATISING	CRITICAL	MEASUREMENT	100%	IS- 6005/F.S.	IS- 6005/F.S.	Q.A. REPORT		P	V	V	
		D) PASSIVATION	CRITICAL	VISUAL	100%	IS- 6005/F.S.	IS- 6005/F.S.	Q.A. REPORT		P	V	V	
3	SURFACE PREPARA- -TION & PAINTING	A) PRIMER(2 COATS)	CRITICAL	VISUAL	100%	APP.DRG	APP.DRG	Q.A.REPORT		P	V	V	
		B) SURFACER	CRITICAL	VISUAL	100%	APP.DRG	APP.DRG	Q.A.REPORT		P	V	V	
		C) FINAL PAINTING	CRITICAL	VISUAL	100%	APP.DRG	APP.DRG	Q.A.REPORT		P	V	V	
		D) THICKNESS	CRITICAL	MEASUREMENT	SAMPLE	APP.DRG	APP.DRG	Q.A.REPORT		P	V	V	
4	ELECTRICAL & MECH.	A) CHECK ARRANGE / LAYOUT OF COMP. & MOUNTING	CRITICAL	VISUAL	100%	APP.DRG	APP.DRG	Q.A.REPORT		P	V	V	
		B) WIRE CLAMPING & FERULING	CRITICAL	VISUAL	100%	APP.DRG	APP.DRG	Q.A.REPORT		P	V	V	
		C) INTERCONNECTION B/W COMPONENT	CRITICAL	VISUAL	100%	APP.DRG	APP.DRG	Q.A.REPORT		P	V	V	
		D)LUG SIZE&CRIMPING	CRITICAL	VISUAL	100%	APPD. APP.DRG	F.S./APP.DRG	Q.A.REPORT		P	V	V	
		E) COMPONENT IDENTIFICATION	CRITICAL	VISUAL	100%	APPD. APP.DRG	APP.DRG	Q.A.REPORT		P	V	V	
		F) WIRE SIZE	MAJOR	VISUAL	SAMPLE	IS-694 / APP.DRG	IS-694 / APP.DRG	M.T.C./QA REP.		P	V	V	
		G) NAME PLATES	CRITICAL	VISUAL	100%	APP.DRG	APP.DRG	Q.A.REPORT		P	V	V	
		H) PIPING	MAJOR	VISUAL	100%	APP.DRG	APP.DRG	Q.A.REPORT		P	V	V	

		LEGEND : * RECORDS, INDENTIFIED WITH `TICK' SHALL BE ESSENTIALLY INCLUDED BY CONTRACTOR IN QA DOCUMENTATION. ** M : MANUFACTURER/ SUBCONTRACTOR C: CONTRACTOR/ NOMINATED INSPECTION AGENCY E : END USER INDICATE `P' PERFORM, `W' WITNESS AND `V' VERIFICATION AS APPROPRIATE "CHP" END USER SHALL IDENTIFIED IN COLUMN `E'	FOR END USER :	DOC. NO.
MANUFACTURER /SUBCONTRACTOR	CONTRACTOR			
SIGNATURE			REVIEWED BY	NAME & SIGN OFAPPROVING AUTHORITY WITH SEAL

	MANUFACTURER'S NAME & ADDRESS	MANUFACTURING QUALITY PLAN	
		ITEM : LOCAL INSTRUMENT ENCLOSURE & LOCAL INSTRUMENT RACK	QP Ref NO.: CE/416/LIE-LIR/QP REV. : 00 DT. : 05.10.2023 PAGE : 06 OF 06

S. NO.	COMPONENTS & OPERATIONS	CHARACTERISTICS	CLASS	TYPE OF CHECK	QUANTUM OF CHECK	REFERENCE DOCUMENT	ACCEPTANCE NORMS	FORMAT OF RECORD		AGENCY M	C	E	REMARKS
1	2	3	4	5	6	7	8	9	D*	**10			11
D)	***FINAL INSPECTION***												
1	A) VERIFICATION OF COMPONENTS /RATING/ ARRANGEMENTS/ LOCATION FOR EASY ACCESSABILITY AND MAINTENANCE .		CRITICAL	VISUAL	100%/SAM.	APP.DRG	APP.DRG	Q.A. REPORT		P	W	W	
	B) COMPLETENESS OF WIRING ,TUBING/ PIPING		CRITICAL	VISUAL	100%/SAM.	APP.DRG	APP.DRG	Q.A. REPORT		P	W	W	
	C) TERMINAL ARRANGEMENTS,SPARE TER- -MINALS , EARTH BUS TIN PLATED COPPER)		CRITICAL	VISUAL	100%/SAM.	APP.DRG	APP.DRG	Q.A. REPORT		P	W	W	
	D) PAINT SHADE,THICKNESS & ADHESION		CRITICAL	MEASUREMENT	SAMPLE	APP.DRG	APP.DRG	Q.A. REPORT		P	W	W	
	E) DOOR ALIGNMENT		MAJOR	VISUAL	100%/SAM.	APP.DRG	APP.DRG	Q.A. REPORT		P	W	W	
	F) GENERAL APPEARENCE (STRAIGHTNESS, FREE FROM SCRATCHES, BENDS, DENTS AND SHEET THICKNESS)		MAJOR	VISUAL	100%/SAM.	APP.DRG	APP.DRG	Q.A. REPORT		P	W	W	
	G) HYDROSTATIC TEST FOR ASSEMBLY. (1.5 TIMES RATED PRESSURE)		CRITICAL	MECHANICAL	100%	APP.DRG	APP.DRG/ NO LEAK/ PRESSURE DROP	Q.A. REPORT		P	W	W	PERFORMED BY VENDOR 100 % BHEL WITNESS ON 10%
	(PNEUMATIC TEST FOR PURGING LINES (NO LEAKAGED WITH SOAP SOLUTION)												
2	OVERALL FINISH		MAJOR	VISUAL	100%/SAM.	APP.DRG	APP.DRG	Q.A. REPORT		P	W	W	
3	CONTINUITY TEST		MAJOR	FUNCTIONAL	100%/SAM.	APP.DRG	APP.DRG	Q.A. REPORT		P	W	W	
4	IR TEST		MAJOR	MEASUREMENT	100%/SAM.	APP.DRG	APP.DRG	Q.A. REPORT		P	W	W	
5	HV TEST		MAJOR	MEASUREMENT	100%/SAM.	APP.DRG	APP.DRG	Q.A. REPORT		P	W	W	
6	FUNCTIONAL TEST		MAJOR	FUNCTIONAL	100%/SAM.	APP.DRG	APP.DRG	Q.A. REPORT		P	W	W	
7	IP TEST	TYPE TEST	MAJOR	VERIFICATION	100%/SAM.	APP.DRG	APP.DRG	Q.A. REPORT		P	V	V	

M. T.C. = MANUFACTURER'S / MATERIAL TEST CERTIFICATE
F.S. = FACTORY STANDARD
NOTE :- CUSTOMER / INSPECTION AGENCY / END USER MAY DO INSPECTION ON SAMPLE BASIS

Q.A.REP.= QUALITY ASSURANCE REPORT
APP. APP.DRG = APPROVED DRAWING
SAM. = SAMPLE

LEGEND :
* RECORDS, INDENTIFIED WITH `TICK' SHALL BE ESSENTIALLY INCLUDED BY CONTRACTOR IN QA DOCUMENTATION.
** M : MANUFACTURER/ SUBCONTRACTOR
C: CONTRACTOR/ NOMINATED INSPECTION AGENCY E : END USER
INDICATE `P' PERFORM, `W' WITNESS AND `V' VERIFICATION
AS APPROPRIATE "CHP" END USER SHALL IDENTIFIED IN COLUMN `E'

MANUFACTURER /SUBCONTRACTOR	CONTRACTOR	REVIEWED BY	NAME & SIGN OFAPPROVING AUTHORITY WITH SEAL
SIGNATURE			