BHARAT HEAVY ELECTRICALS LIMITED

TRANSMISSION BUSINESS GROUP
SUBCONTRACTS MANAGEMENT
PLOT NO. 25, SECTOR 16A, NOIDA,
DISTT. – GAUTAM BUDDH NAGAR (U.P.) - 201301

TENDER DOCUMENTS

FOR

CONSTRUCTION OF TOWER & EQUIPMENTS FOUNDATIONS, PANEL ROOM, REACTOR, ROAD, TRENCH, DRAIN, METAL SPREADING, FENCE & GATE, OPEN STORE & EARTHING WORKS ETC. OF 400 KV SWITCHYARD AT OPTCL DUBRI PARADIP IN ODISHA.

CUSTOMER

M/S ODISHA POWER TRANSMISSION CORPORATION LTD.

TENDER SPEC. NO.: TBSM/OPTCL-DUBRI/CIVIL/TENDER/23-24

DATE: 06.06.2023

TRANSMISSION BUSINESS GROUP

SUBCONTRACTS MANAGEMENT

INDEX

Sl. No.	Description	No. of Pages
1.0	Notice Inviting Tender	10
2.0	Pre-Qualifying Requirements	02
3.0	Project Information/ BHEL's Contacts	01
4.0	Health, Safety & Environment specification (Doc. No.: - TBG/HSE/NIT-01, Rev-01 Date 22.10.2021)	18
5.0	General Conditions of Contract for Civil Works (Document No. TB-Civil-GCC, Rev-02)	70
6.0	Annexure to conditions of contract for Civil Works	28
7.0	Annexure A of Clause No. N of Annexure to conditions of contract for Civil Works - "BHEL Conciliation Scheme"	11
8.0	Bill of Quantity Cum price schedule	11
9.0	Price Bid Format: - To be filled by the Bidder Online through https://eprocurebhel.co.in	01
10.0	Technical Specifications: -	
10.1	Technical Specification for Civil Works (Document No- TB-420-607-003 DUBRI)	79
10.2	Earthing Layout	02
10.3	Equipment Earthing philosophy and details	21
10.4	Open Store Specification	01
11.0	Integrity Pact	05
12.0	No Deviation Certificate	01
13.0	Declaration for relation in BHEL	01
14.0	E payment Format	01

BHARAT HEAVY ELECTRICALS LIMITED

TRANSMISSION BUSINESS GROUP

SECTOR-16A, NOIDA -201301

e-mail: tbsm@bhel.in

NOTICE INVITING TENDER

REF.: TBSM/OPTCL-DUBRI/CIVIL/TENDER/23-24 **DATE: 06.06.2023**

SUB: TENDER FOR "CONSTRUCTION OF TOWER & EQUIPMENTS FOUNDATIONS, PANEL ROOM, REACTOR, ROAD, TRENCH, DRAIN, METAL SPREADING, FENCE & GATE, OPEN STORE & EARTHING WORKS ETC. OF 400 KV SWITCHYARD AT OPTCL DUBRI PARADIP IN ODISHA".

Dear Sirs,

1. **Sealed tenders are invited for the following:**

NAME OF WORK	TIME OF COMPLETION	EARNEST MONEY DEPOSIT	TENDER SUBMISSION DATE AND TIME	TENDER OPENING DATE & TIME
Construction of Tower & Equipments foundations, Panel Room, Reactor, Road, Trench, Drain, Metal Spreading, Fence & Gate, Open store & Earthing works etc. of 400 kV Switchyard at OPTCL Dubri Paradip in Odisha	12 months from the date of LOI	₹ 9,86,547.00 As per Annexure to conditions of contract for Civil works	20.06.2023 14.30 hrs.	20.06.2023 15.30 hrs. (Technical bid only)

2. Bidder **has** to submit offer directly through E-PROCURMENT MODE. Bidder may visit **https://eprocurebhel.co.in**

Procedure for Submission of Tenders through e-tendering: The tender is also floated online through our E-Procurement Site https://eprocurebhel.co.in . The bidder may respond by submitting their offer online in our e-Procurement platform at https://eprocurebhel.co.in

Offers are invited in two-parts only.

Documents Comprising the e-Tender

The tender shall be submitted online EXCEPT EMD (which shall be submitted in physical form (as described in NIT cl. No.1) above as mentioned below:

a) Technical Bid (Un priced Tender)

All Technical details (e.g. Eligibility Criteria requested (as mentioned below)) should be attached in e-tendering module, failing which the tender stands invalid & may be REJECTED. Bidders shall furnish the following information along with technical tender (preferably in pdf format):

i) Earnest money Deposit (EMD) furnished in accordance with NIT Clause 4.0

ii) Technical Bid (without indicating any prices).

b) Price Bid:

i) Prices are to be quoted in the attached Price Bid format online on e-tender portal.

ii) The price should be quoted for the accounting unit indicated in the e-tender document.

iii) Note: It is the responsibility of tenderer to go through the Tender document to ensure furnishing all required documents in addition to above, if any. Any deviation would result in REJECTION of tender and would not be considered at a later stage at any cost by BHEL.

iv) A person signing (manually or digitally) the tender form or any documents forming part of the contract on behalf of another shall be deemed to warrantee that he has authority to bind such other persons and if, on enquiry, it appears that the persons so signing had no authority to do so, the purchaser may, without prejudice to other civil and criminal remedies, cancel the contract and hold the signatory liable for all cost and damages.

v) A tender, which does not fulfil any of the above requirements and/or gives evasive information/reply against any such requirement, shall be liable to be ignored and rejected.

c) Uploading of the price bid in prequalification bid or technical bid may RESULT IN REJECTION of the tender.

d) Tenders shall be uploaded with all relevant PDF/zip format. The relevant tender documents should be uploaded by an authorized person having Class 3- SHA2- 2048 BIT- SIGNING & ENCRYPTION digital signature certificate (DSC).

3. **Tender must be accompanied by the prescribed amount of Earnest Money Deposit (EMD) in the manner described in "Annexure to the Conditions of contract for civil work "which shall be part of the Technical Bid.**

   In case of E-Tenders, no paper bids shall be accepted, therefore, the scanned copy of the Banker's Cheque/ Demand Draft/ Pay Order/ Details of payment made through Electronic Fund Transfer/ Fixed Deposit Receipt (FDR) / Bank Guarantee should be uploaded in the E-Procurement Portal and hard copy of the same should reach to following address at before the due date and time of bid submission. BHEL shall not be responsible for postal or any other delays in this regard.)

TENDER SPEC. NO.: TBSM/OPTCL-DUBRI/CIVIL/TENDER/23-24 **DATE: 06.06.2023**

TO,

Dipak Kumar Mandal
AGM (TBSM)
BHARAT HEAVY ELECTRICALS LIMITED,
TRANSMISSION BUSINESS GROUP,
Plot no.: - 25, Sector- 16A, Noida, Distt. - Gautambudh Nagar, UP-201301
TELEPHONE: 0120-6748134, 99111 63182
E-mail: dipak.mandal@bhel.in

4. **Bidders may please note that no other mode of bid submission shall be considered for evaluation apart from Clause no. 02 to 03 mentioned above.**

5. The prospective bidders who have downloaded the tender documents from our website are requested to send their acknowledgement and willingness to participate in the tender to the undersigned, through fax or email.

6. Offers should be strictly in accordance with the Tender Specifications and General Instructions to Tenderer enclosed herewith.

7. "BHEL shall be resorting to Reverse Auction (RA) (Guidelines as available on www.bhel.com) for this tender. RA shall be conducted among all the techno-commercially qualified bidders.

   Price bids of all techno-commercially qualified bidders shall be opened and same shall be considered for RA. In case any bidder(s) do(es) not participate in online Reverse Auction, their price bid along with applicable loading, if any, shall be considered for ranking."

8. The contractor shall give his explicit confirmation without any deviations to the HSE (Health, Safety and Environment) requirements as per enclosed specification No. TBSM/HSE/NIT-01, Rev-01 Date 22.10.2021. Contactors are also required to furnish details as per Annexure (HSE) to NIT along with their offer. Offers received without compliance & data about HSE requirements are liable to be rejected.

9. All documents submitted with the offer shall be signed and stamped in each page by authorized representative of the bidder.

10. Clarifications, if any, can be obtained from the undersigned but such requests should be submitted well before the due date for submission of tenders. Due date for submission and opening of tenders will not be extended on such grounds.

11. Please note that wherever there is a contradiction between the 'Annexure to conditions of contract for civil works' and 'Conditions of contract for civil works', the 'Annexure to conditions of contract for civil works' clauses shall be governing and binding on the contractor.

12. Drawings & FQP enclosed with the NIT (if provided) are for tender purpose only. Drawings & FQP may get change during execution stage and work to be carried as per latest RFC drawings & Field Quality Plan (FQP).

13. Construction/ RFC drawing/ Fronts shall be furnished progressively as per project requirement and no claim towards idling charges/ project overheads etc. borne by the contractor on account of non-availability of drawings/ fronts shall be entertained.

14. Completion period of the work has been envisaged under best possible conditions. Any changes/ deviation during execution shall be dealt as per relevant clauses mentioned in general/ special conditions of contract for civil works.

15. *"In case this tender is awarded to first time contractor*, then the bidder shall be eligible to qualify for the next tender of similar work# of BHEL, TBG; only after successful executing of 50% (fifty percent) of this work prior to the date of next tender (in which bidder desires to quote) and on satisfactory performance feedback by BHEL site Incharge."*

    ** First time contractor: The bidders who have not successfully executed more than 50% (fifty percent) of awarded similar work by BHEL (TBG/ ISG/Power Sector/Any BHEL Unit) in last 5 years from date of NIT.*

    The bidders who have taken any order from BHEL under 1st time category, and desires to further participate in BHEL tenders, needs to submit a certificate/ undertaking mentioning the reason of not executing 50% of awarded work, hence the criteria under 1st time bidder shall not be applicable to them. The certificate/ undertaking shall be duly certified by Site In charge of BHEL

    # Similar work: Similar to nature of work of the tender under consideration.

16. The Bidders are advised to visit Site to have better understanding of job.

17. The offers of the bidders who are under suspension as also the offers of the bidders, who engage the services of the banned firms, shall be rejected. The list of banned firms is available on BHEL web site www.bhel.com.

    1.0 Integrity commitment, performance of the contract and punitive action thereof:

    1.1. Commitment by BHEL:

    BHEL commits to take all measures necessary to prevent corruption in connection with the tender process and execution of the contract. BHEL will during the tender process treat all Bidder(s) in a transparent and fair manner, and with equity.

    1.2. Commitment by Bidder/ Supplier/ Contractor:

    1.2.1. The bidder/ supplier/ contractor commits to take all measures to prevent corruption and will not directly or indirectly influence any decision or benefit which he is not legally entitled to nor will act or omit in any manner which tantamount to an offence punishable under any provision of the Indian Penal Code, 1860 or any other law in force in India.

1.2.2. The bidder/ supplier/ contractor will, when presenting his bid, disclose any and all payments he has made, and is committed to or intends to make to agents, brokers or any other intermediaries in connection with the award of the contract and shall adhere to relevant guidelines issued from time to time by Govt. of India/ BHEL.

1.2.3. The bidder/ supplier/ contractor will perform/ execute the contract as per the contract terms & conditions and will not default without any reasonable cause, which causes loss of business/ money/ reputation, to BHEL.

If any bidder/ supplier/ contractor during pre-tendering/ tendering/ post tendering/ award/ execution/ post-execution stage indulges in mal-practices, cheating, bribery, fraud or and other misconduct or formation of cartel so as to influence the bidding process or influence the price or acts or omits in any manner which tantamount to an offence punishable under any provision of the Indian Penal Code, 1860 or any other law in force in India, then, action may be taken against such bidder/ supplier/ contractor as per extant guidelines of the company available on www. bhel.com and/or under applicable legal provisions".

18. Also, offer of the bidders who are suspended (under hold/ delist) for business dealings by BHEL, TBG shall not be considered. Please note that lifting/ restoration of suspension (Ban/Hold/ De-list) of business dealing is not automatic after expiry of specified suspension period. Hence, vendor shall be considered as suspended for business till suspension is lifted by BHEL in writing on specific request of the vendor as per extant guidelines.

19. BHEL Fraud Prevention Policy, "The Bidder along with its associate/ collaborators/ sub-contractors/ sub-vendors/ consultants/ service providers shall strictly adhere to BHEL Fraud Prevention Policy displayed on BHEL website http://www.bhel.com and shall immediately bring to the notice of BHEL Management about any fraud or suspected fraud as soon as it comes to their notice."

20. Offers will be scrutinized based on the qualifying requirements and only those who are technically and financially capable to execute the Job and who fulfil the Pre-Qualifying Requirements (PQR) are eligible to quote against the above NIT. However, final acceptance of the bidder/ offer shall be subject to acceptance of our customer.

21. The evaluation currency for this tender shall be INR.

22. The Submission of EMD is compulsory for subject tender. In case requisite Amount of EMD not submitted by the bidder before tender opening or along with offer, the offer shall not be considered for evaluation and the offer shall be rejected.

23. In the course of evaluation, if more than one bidder happens to occupy L-1 status, effective L-1 will be decided by soliciting discounts from the respective L-1 bidders.

    In case more than one bidder happens to occupy the L-1 status even after soliciting discounts, the L-1 bidder shall be decided by toss/ draw of lots, in the presence of the respective L-1 bidder(s) or their representative(s).

    Ranking will be done accordingly. BHEL's decision in such situations shall be final and binding.

24. Technical Bid will be opened in the office of undersigned. If required, technical discussions will be held with only those bidders who have taken any deviations. Bidders representative may be present during technical bid opening for technical discussion, if required. The price bids will be opened subsequently, after Technical Bids of all the bidders have been evaluated and freezed. Bidders should quote their most competitive rates as there will not be any price negotiation. However, if felt necessary by BHEL, price negotiation will be held with lowest bidder (L-1) only. **IT WOULD BE PREFERRED THAT YOUR OFFER IS WITHOUT ANY DEVIATION w.r.t. TENDER SPECIFICATIONS AND THE SAME MAY BE CLEARLY MENTIONED ON THE COVERING LETTER ACCOMPANYING THE TECHNICAL BID.** Offers with deviations are likely to be rejected. However, if the bidder insists on any technical or commercial deviations, from the specification and/or tender conditions, the price

implication if any, of withdrawing the deviations must be submitted along with the price bid in a separate sealed envelope superscribed "Price Implication for withdrawal of deviations".

25. In case any adverse information is received concerning performance, capability or conduct of the bidder after issue of tender enquiry, BHEL reserves the right to reject the offer at any stage as deemed fit.

26. **Integrity Pact (IP)**

(a) IP is a tool to ensure that activities and transactions between the Company and Its Bidders/ Contractors are handled in a fair, transparent and corruption free manner. Following Independent External Monitors (IEMs) on the present panel have been appointed by BHEL with the approval of CVC to oversee implementation of IP in BHEL

Sl no.	IEM	E- mail
1	Shri Otem Dai, IAS (Retd.)	iem1@bhel.in
2	Shri Bishwamitra Pandey, IRAS (Retd.)	Iem2@bhel.in
3.	Shri Mukesh Mittal, IRS (Retd.)	Iem3@bhel.in

(b) The IP as enclosed with the tender is to be submitted (duly signed by authorized signatory) along with techno-commercial bid (part-I in case of Two/ Three Part Bid). Only **those bidders who have entered into such an IP with BHEL would be competent to participate in the bidding**. In other words, entering into this Pact would be a preliminary qualification,

(c) Please refer Section-8 of the IP for Role and Responsibilities of IEMs. In case of any complaint arising out of the tendering process, the matter may be referred to any of the above IEM(s). All correspondence with the IEMs shall be done through e-mail only.

Note: -

No routine correspondence shall be addressed to the IEM (phone/ post/ email) regarding the clarifications, time extensions or any other administrative queries, etc. on the tender issued. All such clarification/ issues shall be addressed directly to the tender issuing (procurement) department's officials whose contact details are provided below":

Details of contact person (s): -

1) Name: - Dipak Kumar Mandal Department: - TBG, Subcontracting Address: - BHEL/ TBG, Noida Phone: - 01206748134 E mail: - dipak.mandal@bhel.in	2) Name: - Rajoo Kumar Department: - TBG, Subcontracting Address: - BHEL/ TBG, Noida Phone: - 01206748551 E mail: - rajoo.kumar@bhel.in

27. Any materials (if required) for civil works have to be procured from Customer approved sources only. It will be the bidder's responsibility to get the approval of materials and vendors for materials.

28. The purchase preference for central P.S.U.s shall be given as per the prevailing Government policy.

29. Work schedule and the deployment of manpower and T&P resources committed by the contractor in their offer, to match the scheduled completion, shall be submitted by contractor and mutually agreed with site In-charge immediately after the award of work. Further, the contractor shall mobilise at site within two weeks of award of work.

30. In case an offer is not being submitted by the prospective bidders against this tender, they may send their "regret" letter to this office, for information.

31. Details of qualifying work(s) executed by the bidder will be forwarded to the principal employer for verification of the work with respect to completion, commencement & completion date and value of the work executed. Performance feedback of the bidder will also be sought from the principal employer.

32. The bidder representative may be called for discussion with the committee. His originals may be verified by the committee. In addition to above their organisation chart and detail list of manpower, tools & plants and technically capability will be discussed and ascertained by the committee.

33. **Under no circumstances the subcontractor shall further sub-contract, transfer, assign or otherwise part with the Contract or any part thereof, either directly or indirectly.**

34. **Conflict of Interest among bidders/Agents:** -

"A bidder shall not have conflict of interest with other bidders. Such conflict of interest can lead to anti-competitive practices to the detriment of Procuring Entity's interests. ***The bidder found to have a conflict of interest shall be disqualified****. A bidder may be considered to have a conflict of interest with one or more parties in this bidding process, if:*

a) they have controlling partner (s) in common; ***or***

b) they receive or have received any direct or indirect subsidy/ financial stake from any of them; ***or***

c) they have the same legal representative/agent for purposes of this bid; ***or***

d) they have relationship with each other, directly or through common third parties, that puts them in a position to have access to information about or influence on the bid of another Bidder; ***or***

e) Bidder participates in more than one bid in this bidding process. Participation by a Bidder in more than one Bid will result in the disqualification of all bids in which the parties are involved. However, this does not limit the inclusion of the components/ sub-assembly/ Assemblies from one bidding manufacturer in more than one bid; ***or***

f) In cases of agents quoting in offshore procurements, on behalf of their principal manufacturers, one agent cannot represent two manufacturers or quote on their behalf in a particular tender enquiry. One manufacturer can also authorise only one agent/dealer. There can be only one bid from the following:

1. The principal manufacturer directly or through one Indian agent on his behalf; and

2. Indian/foreign agent on behalf of only one principal;

or

g) A Bidder or any of its affiliates participated as a consultant in the preparation of the design or technical specifications of the contract that is the subject of the Bid; ***or***

h) *In case of it holding company having more than one independently manufacturing units, or more than one unit having common business ownership/management, only one unit should quote. Similar restrictions would apply to closely related sister companies. Bidders must proactively declare such sister/ common business/ management units in same/ similar line of business.* "

Thanking you,

Yours faithfully,
For and on behalf of BHEL,

(Dipak Kumar Mandal)
AGM /TBSM

TO BE FILLED BY TENDERER OVER THEIR LETTERHEAD

REF.: TBSM/OPTCL-DUBRI/CIVIL/TENDER/23-24 **DATE: 06.06.2023**

SUB: TENDER FOR "CONSTRUCTION OF TOWER & EQUIPMENTS FOUNDATIONS, PANEL ROOM, REACTOR, ROAD, TRENCH, DRAIN, METAL SPREADING, FENCE & GATE, OPEN STORE & EARTHING WORKS ETC. OF 400 KV SWITCHYARD AT OPTCL DUBRI PARADIP IN ODISHA".

It is certified that General Instructions and Information for tenderer have been read/ complied/ agreed to and each page of tender offer has been initialled and stamped.

Also It is being declares that we (……Bidder Name ……..) will not enter into any illegal or undisclosed agreement or understanding, whether formal or informal with other Bidder(s). This applies in particular to prices, specifications, certifications, subsidiary contracts, submission or non-submission of bids or any other actions to restrict competiveness or to introduce cartelization in the bidding process.

In case, the Bidder is found having indulged in above activities, suitable action shall be taken by BHEL as per extant policies/ guidelines

(Signature of Tenderer)

Name and Designation of Authorised person (s)
Signing the tender on behalf of the tenderer

Authorization of representative who will participate in the Online Reverse Auction Process:

1	NAME & DESIGNATION OF OFFICIAL	
2	POSTAL ADDRESS (COMPLETE)	
3	TELEPHONE NOS. (LAND LINE & MOBILE BOTH)	
4	FAX NO.	
5	E-MAIL ADDRESS	
6	NAME OF PLACE / STATE / COUNTRY, WHEREFROM S/HE WILL PARTICIPATE IN THE REVERSE AUCTION	

BHARAT HEAVY ELECTRICALS LIMITED
TRANSMISSION BUSINESS GROUP, NOIDA

PRE-QUALIFYING REQUIREMENTS

Tender Ref. No.: TBSM/OPTCL-DUBRI/CIVIL/TENDER/23-24 **DATE: 06.06.2023**

SUB: TENDER FOR "CONSTRUCTION OF TOWER & EQUIPMENTS FOUNDATIONS, PANEL ROOM, REACTOR, ROAD, TRENCH, DRAIN, METAL SPREADING, FENCE & GATE, OPEN STORE & EARTHING WORKS ETC. OF 400 KV SWITCHYARD AT OPTCL DUBRI PARADIP IN ODISHA".

Sealed Tenders (Under two-part bid system) are invited from competent civil contractors for subject civil works. Only those who are technically and financially capable to execute the Job and who fulfil the Pre-Qualifying Requirements [PQR] given under are eligible to quote against the above NIT. Tenderers should submit their offer in a sealed envelope as per the procedure specified in tender documents. The PQR of contractor for tender submission shall be is as under:

Sl. No.	Criteria	Description
A	Turn Over	Bidder should have a minimum average annual turnover of ₹1,47,98,200/- for last three fin. Years (2019-20, 2020-21 & 2021-22 OR 2020-21, 2021-22 & 2022-23) and should submit audited balance sheet and Profit & Loss Account Sheet of these years. The audited financial statements must be signed by the owner and the auditor. Auditors seal, Name, Membership No., Firm Registration No. & firm name (if applicable), UDIN and the capacity in which he is signing (Proprietor/Partner), must be mentioned on the Profit & Loss A/c and Balance Sheet. In case audited balance sheet is not available due to turnover being less than statutory requirement of audit, bidder should furnish self-certified copies of Balance Sheet, Profit & Loss account along with income tax returns and form 26AS of these years.
B	Profit	Bidder should have earned profit in at least one year during last three financial years as mentioned in A above.
C	Similar Work	Bidder should have successfully executed "**civil works of switchyard or Power plant or Industry involving predominantly concrete work**" during last seven years ending on 30.04.2023 and should be either of the following: i. Three similar jobs executed costing (except service tax/ GST) not less than Rs.1,97,30,933/- each. OR ii. Two similar jobs executed costing (except service tax/ GST) not less than Rs.2,46,63,666/- each. OR iii. One similar job executed costing (except service tax/ GST) not less than Rs.3,94,61,866/-.

Note:

1. The Bidder shall submit the Contract Agreement/Work Order/LOI, BOQ/Drawings and Performance/completion/execution certificate issued by customer/contractor along with technical bid in support of qualification.
2. The word 'executed' means the bidder should have achieved the criteria specified in the PQR even if the total contract has not been completed or closed.
3. In order to technically qualify in this tender, bidder should meet all criteria i.e. A, B & C mentioned above.
4. If the job is executed in the last seven years period, as specified above, even if it has been started earlier, the same will also be considered meeting the qualifying requirements.
5. Consortium/ JV bidding is not allowed.
6. BHEL reserves the right to:
   (a) Accept or reject any bid received at its discretion without assigning any reasons whatsoever.
   (b) Postpone the above-mentioned date, split and distribute the work among more than one bidder without assigning any reason whatsoever.
   (c) May ask for further qualification during techno commercial scrutiny of bids received.
   (d) May ask for further proofs including TDS certificates/ Form 26AS/ Final bill/ payment detail for the said job for cross- verification.
7. BHEL shall not be responsible for any delay, loss, damage for bids sent by post.
8. BHEL shall not be liable for any expenses incurred by bidder in preparation of bid irrespective of whether it is accepted or not.
9. Quotations received from bidders who do not fulfil the PQR shall be summarily rejected without any further evaluation and information to bidders.
10. Canvassing i.e. soliciting favour, seeking advantage etc. in any form is strictly prohibited and any bidder found to have engaged in canvassing shall be liable to have his bid rejected summarily.
11. If the bidder deliberately gives any wrong information in his tender to create in circumstances for the acceptance to his bid, BHEL reserves the right to reject such application.
12. Bidder's selection is subject to approval of BHEL's customer for this work. The approval/acceptance of bidders from Customer is mandatory requirement for subject tender.
13. All corrigenda, addenda, amendments and clarifications to this Tender will be hosted in web page, www.bhel.com and https://eprocurebhel.co.in and not in the newspaper. Bidders shall keep themselves updated with all such amendments.

PROJECT INFORMATION

1.0 CUSTOMER:

M/s ODISHA POWER TRANSMISSION CORPORATION LTD

2.0 PROJECT LOCATION AND DETAILS:

CONSTRUCTION OF TOWER & EQUIPMENTS FOUNDATIONS, PANEL ROOM, REACTOR, ROAD, TRENCH, DRAIN, METAL SPREADING, FENCE & GATE, OPEN STORE & EARTHING WORKS ETC. OF 400 KV SWITCHYARD AT OPTCL DUBRI PARADIP IN ODISHA.

3.0 CONTACT PERSON: FOR CONTRACTUAL ISSUES

DIPAK KUMAR MANDAL
AGM (TBSM)
SUBCONTRACTS MANAGEMENT,
TRANSMISSION BUSINESS GROUP,
Plot No. 25, Sector-16A, Noida,
Distt. Gautambudh Nagar, UP-201301

PHONE: 0120-674-8134/ 99111 63182
E-mail: **dipak.mandal@bhel.in**

CONTACT PERSON: FOR ENGINEERING ISSUES

Shyam Vihari
Sr. Manager (TBEM-Civil)
TRANSMISSION BUSINESS GROUP,
Plot No. 25, Sector-16A, Noida,
Distt. Gautambudh Nagar, UP-201301

PHONE: 0120-674- 8544/9958201144
E-mail: svihari@bhel.in

CONTACT PERSON: FOR CONTRACT EXECUTION ISSUES

Ratheen Sarkar
Sr Dy GM & Sector Head (TBES-Construction)
TRANSMISSION BUSINESS GROUP,
Plot No. 25, Sector-16A, Noida,
Distt. Gautambudh Nagar, UP-201301

PHONE: 0120-674- 8228 / 8140714999
E-mail: ratheen@bhel.in

HSE CONDITIONS

at a GLANCE (for bidders)

Health Safety and Environment Management

Transmission Business Group, Noida

DOCUMENT CONTROL			
Document number:	**TBG/HSE/NIT-01**		
Issue number:	00	Issue date:	08.01.2020
Revision number:	01	Revision date :	22.10.2021

	Prepared by	Checked by	Approved and Issued for use by
Name	Sanjeev Sharma	Arvind Kumar Pandey	Anindya Chakraborty
Designation	Addl. Engineer	Engineer	Adl. General Manager
Signature	-sd-	-sd-	-sd-
Date	22.10.2021	22.10.2021	22.10.2021

Doc. copy issue no. :	Doc. copy issue date :

	Name	Designation	Signature
Issued to :			
Issued by :			

BHARAT HEAVY ELECTRICALS LIMITED

TRANSMISSION BUSINESS GROUP

BHEL TBG through its long experience and policy, has developed a culture to consider wellbeing of the society, protection of environment and occupational health and safety of its workers first. TBG has also a culture of transparency in all its business activities. In line to this culture, this NIT annexure is prepared as a peeping window in to the TBG HSE requirements which need to be 100% complied by the successful bidders while executing the contract. Interested bidders should go through these HSE conditions:

1. BHEL HSE Policy

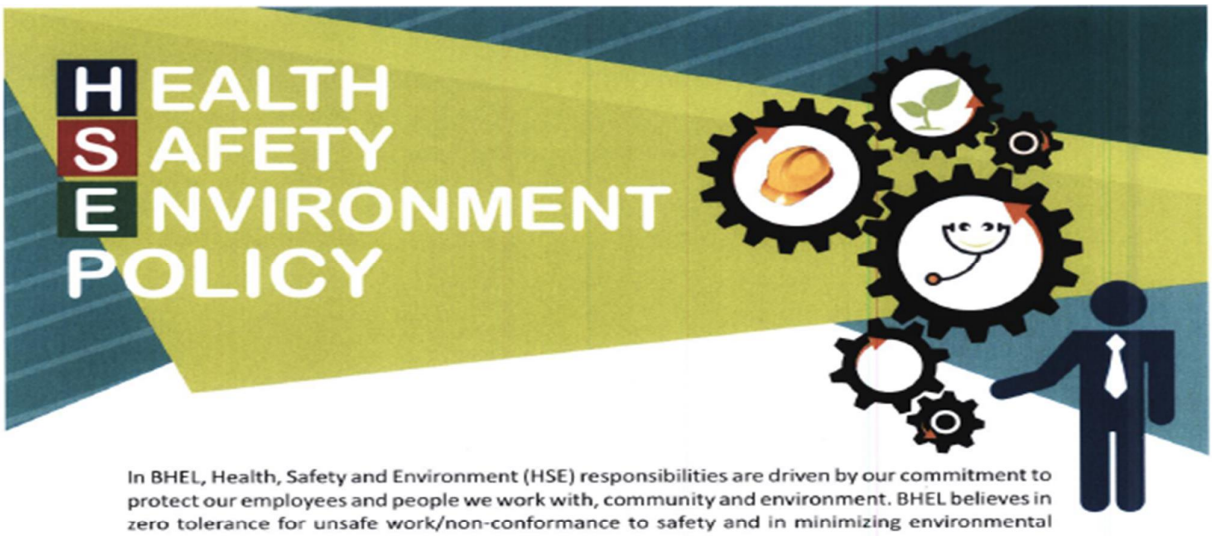

In BHEL, Health, Safety and Environment (HSE) responsibilities are driven by our commitment to protect our employees and people we work with, community and environment. BHEL believes in zero tolerance for unsafe work/non-conformance to safety and in minimizing environmental footprint associated with all its business activities. We commit to continually improve our HSE performance by:

- Developing safety and sustainability culture through active leadership and by ensuring availability of required resources.
- Ensuring compliance with applicable legislation, regulations and BHEL systems.
- Taking up activities for conservation of resources and adopting sound waste management by following Reduce/Recycle/Reuse approach.
- Continually identifying, assessing and managing environmental impacts and Occupational Health & Safety risks of all activities, products and services adopting approach based on elimination/ substitution/reduction/control.
- Incorporating appropriate Occupational Health, Safety and Environment criteria into business decisions, design of products & systems and for selection of plants, technologies and services.
- Imparting appropriate structured training to all persons at workplace and promoting awareness amongst customers, contractors and suppliers on HSE issues.
- Reviewing periodically this policy and HSE Management Systems to ensure its relevance, appropriateness and effectiveness.
- Communicating this policy within BHEL and making it available to interested parties.

Atul Sobti
Chairman & Managing Director

June 5, 2018

Creating BHEL of tomorrow

2. Legal Compliances:

a. Statutory Provisions: All the sub-contractors are to comply with client specific rules and procedures, the National legislations and codes, in particular the following or their revised versions:

Srl. No	Acts/Rules Name	Srl. No	Acts/Rules Name
1	The Factories Act 1948, Amendment Act 1947	11	Contractor labour Act, 1970 (Regulation and abolition)
2	The Environment Act 1986	12	Provident fund Act, 1952
3	Workmen's Compensation Act, 1923	13	Payment of gratuity Act, 1972
4	Building and Other Construction Workers (Regulation of employment and condition of service) Act, 1996	14	Indian Explosives Act and the explosives Rules 2008
5	Buildings and Other Construction Workers Welfare Act, 1996	15	The Gas Cylinder Rules, 2016, Static and Mobile Pressure Vessels (Unfired) Rules 2016
6	Payment of wages Act, 2017 Equal remuneration Act,	16	The Indian Electricity Act 2003 and Indian Electricity Rules 2005
7	Minimum wages Act.1948	17	The Atomic Energy Act, 2015
8	Employers liability Act, 1938	18	The atomic energy (Radiation Protection) Rules. 2004
9	Industrial dispute Act, 1947	19	National Fire Protection Association (NFPA),
10	maternity benefit amendment act 2017	20	National Building Code of India 2016 etc.

b. Indian Standard (IS) Codes related to HSE

All the sub-contractors are to comply with client specific rules and procedures, the National legislations and codes in particular the following or their revised versions:

Srl	IS Code	Applies on
1	IS: 4081 -1986	Safety code for Blasting and Related Drilling operations
2	IS: 3764 -1992	Safety code for excavation work
3	IS: 5121 -1969	Safety code for pilling and other deep foundations

4	IS: 2750 -1964	Specification for steel scaffoldings
5	IS: 3696 (Part-I)-1987	Safety code for scaffolds and Ladders: Part- I Scaffolds
6	IS: 3696 (Part-II) -1991	Safety code for scaffolds and Ladders: Part –II Ladders
7	IS: 4082 -1977	Recommendations on stacking and storage of construction materials at site (First revision)
8	IS: 4130-1976	Safety code for demolition of building (First revision)
9	IS: 4912-1978	Safety requirements for floor and wall openings, railings and toe boards (First revision)
10	IS: 5916- 1970	Safety code for constructions involving use of hot bituminous materials
11	IS: 7205 -1974	Safety code for erection of structural steel work
12	IS: 7969 -1975	Safety code for handling and storage of building materials
13	IS: 8989 -1978	Safety code for erection of concrete framed structures
14	IS: 7293 -1974	Safety code for working with construction machinery
15	IS: 2212 -1991	Pipe lines –Identification –Colour code
16	IS: 5216 -1982	Recommendations on safety procedures &practices in Electrical works (Part -I &II)
17	IS: 875 -1964	Code of practice for structural safety of buildings and loading standards
18	IS: 10386 -1983	General aspects Part-1 -1983, Part-2 -1982, Part-6 -1983, Part-10 -1983- Amenities, Protective clothing and equipment, construction, storage, handling, detection and Safety measures for gases, chemicals and flammable liquids
19	IS: 10500-2012	Drinking water (Specification)
20	IS: 10291 -1982	Code of dress in civil engineering works
21	IS: 2925-1984	Safety helmets
22	IS: 1179-1967	Welding helmets
23	IS: 7524 -1979 (Part-I)	Safety goggles
24	IS: 9167 -1979	Ear muff /Ear plugs
25	IS: 6994 -1973 (Part-I)	Canvas hand gloves, Cotton hand gloves, Chrome leather gloves
26	IS: 4770 -1991	Rubber hand gloves tested for 15,000 volts
27	IS: 3521 -1999	Full body safety harness
28	IS: 11057 -1984	Specification for Industrial safety nets
29	IS: 13415 -1992	Protective Barriers in & around buildings (Code of safety)

30	IS: 13416 -1992	Preventive measures against Hazards at work places-Recommendations part-I Falling materials hazards Prevention part-I
31	IS: 13416 -1992	Preventive measures against Hazards at work places-Recommendations part-II Fall Prevention
32	IS: 15298 -2011 (Part 1&2)	Personal Protective Equipment -Safety shoes
33	IS: 12254 -1993	Poly vinyl chloride (PVC) industrial boots
34	IS: 5557:2004	Industrial and Protective Rubber knee and Ankle boots
35	IS: 2878 -2004	Co2 Type fire extinguisher
36	IS: 2171 -1999	Dry chemical powder fire extinguisher
37	IS: 13849 – 1993	Fire extinguisher for ABC fires
38	IS: 10204-2001	Mechanical Foam type extinguisher (Foam used shall conform to IS: 4989 -1974 and Co2 cartridge shall conform to IS: 4947 -1985)
39	IS: 3786 -1983	Methods for computation of Frequency rate and Severity rates for Industrial injuries and classification of Industrial accidents (First revision)

c. The Sub-contractors need to

- Attend HSE familiarization program at TBG-HQ with his site management team. This will be a half day long awareness session on HSE requirements and compliances which the agency is supposed to fulfil during contract execution at site. The session shall be taken by TBG HSE department on intimation by TBSM. **(Rev-01)**
- Request for issuance of Form-V in their name from customer on behalf of BHEL
- Get the Labour license registration from concerned Labour office.
- Get the BOCW Registration done along with the labour license.
- Get their labourers registered under BOCW for benefits provided by the office.
- Maintain Seven registers of labours as per BOCW requirement.
- Ensure payment of wages to labours not less than the current minimum wages applicable in the premises.
- Ensure PF deduction of labourers and submission of proof to BHEL office (Wage sheet, ECR & Challan copies) duly signed.
- Submit Labour Payment Certificate by 10th of Every month.
- File timely returns, get renewals done and submit a copy to BHEL office.

- Get Workmen's Compensation policy before the start of work, covering all the labourers and staff,
  - Policy should clearly mention the project name and location,
  - should be as per labour class and wage.
  - Should cover all the height workers with clear mention of Max. height.
  - Policy should be submitted to BHEL office and renewal before expiry.
- Issue employment card to every worker.

3. Labour Welfare and Medical Facilities

a. Labour Welfare

1. Declaration of normal working hours and weekly off day, Payment day & intervals
2. Paid rest days & holidays.
3. Payment of overtime @ twice the normal wage rate.
4. No labour shall be allowed overtime >12 hrs/week, limited to 48 hrs/month.
5. Rest and lunch area.
6. Separate Male/Female Toilets and Lavatories, clearly marked in local Language and provided with signage.
7. Cold and clean drinking water facility suitable to strength and near workplace
8. Creche for children of female workers as per BOCW requirements
9. Arranging labour accommodation in hygienic environment with the facilities of Water (Drinking, Sanitation), washing and bathing area, toilets in sufficient nos., clean and safe camps and surrounding, access road, well illuminated camp and roads, mode of contact, transport facility, first aid centre, 24x7 Security etc.
10. Cooking and eating place to be maintained in hygienic condition
11. General awareness of health and hygiene.

b. Medical facilities and Health centres

- Availability of first aid box at every work location and agency office, with contents as per BOCW requirement.
- Emergency vehicle (four wheeler) at work place
- Availability of stretchers in emergency vehicle and in office.
- Trained first aider
- Medical check-up for all the supervisors and workers including cooks, at the time of induction and annually thereafter.
- Tetanus Vaccination for all in every six months.
- Identification and tie-up with nearby reputed hospital(s) and display of their contact number in Emergency contact list.

4. House Keeping & Storage

Housekeeping is a continuous process and is the part of work. Agencies shall maintain safe and presentable housekeeping all the time in their respective areas, common work locations and passage areas. Roads, passages, staircases, entrance/exit gates shall always be maintained obstruction free. No material shall be left or stacked at the roof edges. Agency shall make arrangements to remove scraps on regular basis and dispose them at a space provided by customer, clearly fenced and marked by the sub-contractor as **"SCRAP YARD"**. Suitable arrangement like dedicated housekeeping team and tractor/hydra should be identified for this work.

Construction materials like shuttering materials, staging materials, cables, re-bars, cements bags, earthing flats and rods, FF pipes, surplus soil etc should be stored/stacked properly such that it should neither pose threat to safety of man nor should obstruct the free movement of man and machineries.

Every sub-contractor should have separate and well maintained storage area for his own materials, T&Ps, PPEs and BHEL issued materials. Consumables like diesel, cotton, grease, oil, paint, admixtures and other fire potential materials should be stored separately with suitable firefighting facility.

Fire capacity of store area to be assessed and accordingly fire extinguishers shall be planned suiting the class and capacity of fire. Sand heaps may also be stacked in open store yards suitably to use in case of fires.

5. Site Safety

a. Induction and others safety trainings

Every sub-contractor shall make arrangement to provide induction training as per BHEL and/or customer requirement on a pre-approved and fixed module to all its new inductees irrespective of class or grade of appointment/hire. He shall also arrange the required facilities for induction training such as board, marker, dummy, posters/banners with all the mandatory PPEs.
Sub-contractor shall also arrange for periodic trainings on fire-fighting, first aid, CPR, importance and use of PPEs, electrical safety, hot work safety, Height work safety, confined space, deep excavations and barricading, concreting work safety etc.

b. Appointment of Safety Officer/Supervisor

Every sub-contractor shall appoint at least one full time qualified safety officer having qualification and experience as specified in Schedule-VIII of BOCW Act-1996. He shall not be assigned any duty/work other than assisting in upliftment of safety practices. He shall perform his duties in accordance with the requirements of Schedule-VIII of BOCW-1996. He shall ensure daily TBT, induction training, health check-up and other such compliances as per HSEP-14 on regular basis. In case of non-appointment, agency shall be penalized as per provisions in clause no. 7.0 of HSEP-14 (HSE Plan for Site Operations (subcontractors)) **(Rev-01)**

c. Safety organisation, Safety committees and meetings

Safety officer shall report directly to the head of the projects of the sub-contractor management. There shall be some appointed or nominated safety stewards from each sub-group like shuttering, bar-bending, concreting, brick work, material handling, structure erection, cable laying, pipe work, maintenance, batching plant, housekeeping etc.

A safety committee shall be formed including members from different agencies, BHEL and customer covering at-least 50% participation from workers. Safety committee shall meet on weekly basis or as may be decided by customer, outcomes shall be complied as committed.

d. Personal Protective Equipments.

Unless mentioned otherwise, there will be three mandatory PPEs- Safety shoes, Safety Helmet and Reflective jackets conforming to relevant IS codes as mentioned above.
Every person entering in the project premises shall use above mandatory PPEs.
There will be other PPEs too based on the work requirement like:
Twin lanyard full body harness, fall arresters and life lines for height workers,
Face shield for welders and grinders, Induction helmets and Electrical resistant shoes with FRP/PVC toe for electricians and commissioning engineers, Gum boots for concrete workers and manual excavators, Goggle for gas cutters and grinders, Aprons for welders, shoulder pads for material handlers, Hand gloves – Leather for binders/welders/grinders, certified Rubber gloves

for electricians, PVC for concrete/cement handlers, cotton-housekeeping team/brick coolies/erectors, cable laying men and other material handlers. Dust mask for cement handlers.

e. Material Handling

BHEL as a policy discourages continuous manual handling. Material handling contributes a major portion in the project and hence proper means (mechanical/ electrical powered) should be deployed appropriately for this work. Cranes/Faranas/hydras should not be used for material transportation for long distances(>100m), if such movement is un-avoidable, it must be accompanied by a trained signal man. Long materials should be guided by tagline. Roads for material movement should be free from obstructions. Lifting appliances must be in good condition and must have test/inspection certificates.
Lifting tackles like- D-shackles, chains, ropes, slings, belts shall be periodically inspected and shall have valid test certificate and/or third party inspection certificates.
Painted/galvanized structures/materials to be lifted by adequate capacity nylon belts only.
If a machine undergoes a major maintenance, fresh TPI shall be required before use. Hydraulic/pneumatic machines shall be free from leakages. Daily checklist to be filled and witnessed by the concerned supervisor before start of the work.

f. Vehicle/Machinery Documents and other safety requirements

- Crawler mounted boom cranes/Tyre mounted telescopic cranes/tower cranes
  1. Valid third party inspection certificate.
  2. Valid Insurance policy
  3. Registration Certificate (if applicable)
  4. Valid Pollution under control (PUC) (if applicable)
  5. Fitness certificate from RTO (if applicable)
  6. Operator's valid license, experience and/or competence certificate.
  7. Swing horn
  8. Reverse horn
  9. Boom aviation light
  10. Approved Load chart (inside cabin)
  11. Fire extinguisher (inside cabin)
  12. First aid kit (inside cabin)
  13. Boom angle indicator
  14. Hook Latch
  15. Reflector strips on around cabin and on boom

- Loader backhoe (JCB), crawler excavators (Poclain), Hydra,
  1. Valid third party inspection certificate.
  2. Valid Insurance policy
  3. Registration Certificate (if applicable)
  4. Valid Pollution under control (PUC) (if applicable)

5. Fitness certificate from RTO (if applicable)
6. Operator's valid commercial license, experience and/or competence certificate.
7. Reverse horn
8. Approved Load chart (inside cabin) (Hydra)
9. Fire extinguisher (inside cabin)
10. First aid kit (inside cabin)
11. Hook Latch (Hydra)
12. Reflector strips on around cabin and on boom

- Tipper, Transit mixtures (TM), Self-loading concrete mixture (Ajax Fiori), Tractors
    1. Valid third party inspection certificate.
    2. Valid Insurance policy
    3. Registration Certificate
    4. Valid Pollution under control (PUC)
    5. Fitness certificate from RTO
    6. Operator's valid commercial Heavy license, experience and/or competence certificate.
    7. Reverse horn
    8. Fire extinguisher (inside cabin)
    9. First aid kit (inside cabin)
    10. Reflector strips on around cabin and on body

Note: 1. Tractors may be allowed with Light Commercial/non-commercial license on customer's consent.

- Cars, Taxis, scooters, motor cycles and other public carriers
    - Valid 2/4 wheeler license (as applicable- commercial/non-commercial)
    - Registration Challan
    - Valid Insurance
    - Pollution under control

g. Man-lifts (Cherry pickers), Scissors Lifts

1. Trained operator with experience/competence certificate and license
2. Valid third party inspection certificate.
3. Valid Insurance policy
4. Registration Certificate (if applicable)
5. Valid Pollution under control (PUC) (if applicable)
6. Swing horn
7. Reverse horn
8. Boom aviation light
9. Fire extinguisher (inside cabin)
10. First aid kit (inside cabin)
11. Reflector strips on around cabin and on boom

Note:

1. No one shall ride man-lift bucket without safety belt, safety shoes, helmet and reflective jacket.
2. Not more than 3 persons at a time will board in bucket of man-lift (without any heavy materials) including operator.
3. Operator will not leave the machine while persons are elevated and working.
4. No one other than the authorised operator will operate the man lifts/Scissors lifts.

h. Excavation

Prior permission/clearance from customer is a must for excavations in areas where underground service services such as gas/water/oil/chemical/electrical lines may be routed. Due precautions shall be taken during excavation in such area. Excavations near water bodies (ponds/canals etc.) shall be done with sand/soil bags ready to plug water from accidental damaged/burst of edges. All the excavations shall be done by either step cutting (min. 600mm step at every 1.5m depth) or slope cutting at 1:2(X:Y axis) (or greater depending upon the soil condition). Where step cutting/slope cutting is not possible due to space constraints, shoring/shuttering or sheet piling to be used to check collapse of soil.

Excavated soil shall be stacked away from edge of the pit, at-least 1.5 meters or half of the depth whichever is higher. Height of the stack shall not exceed 2m in height.

Ramps shall be provided for access of the workers in large pits and ladder of metal/good built for small pits. Ladders shall be of sufficient length protruding at least 1m above the ground level.

Pumps of adequate capacity shall be available for pumping out of water. No lone worker shall be allowed to work in any excavation. Overloaded vehicle shall not be allowed near excavated pits.

i. Bar bending and Binding

Bar bending machine shall be installed under shed/roof. It shall be properly earthed and maintained for operation. Housekeeping of the area shall be team's responsibility on daily basis. All be bar benders shall be given hand gloves (leather/cotton) in addition to mandatory PPEs. Scrap shall be segregated and moved to scrap yard on regular basis. Bar bending station shall be located away from Main plying roads/passages. The station shall be well illuminated, shall have a maintained first aid kit and potable water. Station shall be located in such a way that the movement of the material be minimised.

j. Concreting

No electric vibrators shall be allowed to use. All the concrete workers shall be issued gum boots, safety helmets, reflective jackets and PVC hand gloves. Free fall of concrete from chute shall not exceed 1m in height. Heavy machineries/ vehicles shall be kept at least 2m away from the edge. Emergency vehicle shall be available near concreting work. Late night works shall be avoided, if it is unavoidable, a prior permission from BHEL/Customer is mandatory.

k. Welding, Gas Cutting & other hot works

Welding: Only experienced welders should be deployed for welding jobs. Welders shall be provided with apron, hand gloves, arm pads, leg pads, face shield and safety shoes. Welding leads shall be joint less and insulated. Power input point shall be fully covered at machine.

Gas cutting: If LPG is being used, domestic cylinder is strictly prohibited inside the project premises, (not allowed for site kitchen too). Hose pipes shall be in good condition without cracks, cuts, punctures or joints. Ends should be clamped with worm clamps. Dial gauges shall be of good quality and duly calibrated. Flash back arresters is a must for both oxygen/acetylene or LPG/Oxygen combination. Cylinders shall be stored, transported and used in vertical position only. When not in use, they shall be capped. Empty and filled cylinders to be stored separately with distinct marking.
Cylinders shall neither be rolled on the ground nor thrown during loading/unloading.

Grinding: Grinder shall be given clear glass face shield, apron, safety shoes, ear muffs and hand gloves. Grinder machines shall have wheel guard. Plug tops to be used for power connection preferably three wire type. Only trained persons shall be allowed to use grinders, abrasive cutters. Electrical connection shall be free from cuts, joints etc.

l. Erection & Height Work

Only trained filters and experienced helpers shall be engaged in erection work. Step bolts of lattice towers shall be checked for full tightness with spring washers before use. Height pass shall be issued to the identified group of erectors who have passed medical test and have working experience at height. Name of such workers shall be displayed at appropriate place. These workers only shall be allowed to work at height. Height work shall not be permitted in high wind/bad weather condition, during raining or in night/dark.

m. Electrical Safety

BHEL usually provided single point power source and sub-contractors draw power from there. Otherwise agencies make their own arrangement for construction power like DG sets etc. Sub-contractors shall submit their load requirement (amperage & phase) to BHEL before start of work. Accordingly, they shall make arrangements to draw power and distribution arrangements too in a safe way. MCCBs and HRC fuses to be put in circuit for short circuit and overload protections and RCCBs of 30mA sensitivity to be put at each distribution panel for human safety. Earthing pits shall be installed at each distribution point and maintained below three Ohm resistivity which shall be inspected randomly. The distribution points shall be clean, free from vegetation and water logging, easily accessible and covered/protected from three sides and top for rain. Earthing of DBs shall be done by 25x3mm GI flats connected from proper earth pits. Insulation mat, PVC Sheet/Wooden plank to be placed before DBs as platform. DB Sheds shall be legibly marked with name of agency, contact no of electrician and SLD of that DB. Only industrial plugs and sockets shall be allowed. Three wire (Phase, neutral and earth) system shall be used for tools, lights and machineries and two wire power draw shall be strictly prohibited. PTW and LOTO system shall be maintained to work on LT system. Name and contact no of authorised electricians who will be responsible of electrical power facility maintenance shall be submitted to BHEL by Agencies. Unauthorised sharing of power from one agency to other is strictly prohibited. Electricians shall use standard PPEs and insulated tools only. Standard and tested/certified discharge rods to be used in the areas where there is a possibility

of residual current or induction charge. The induction rod to be connected to the earth first and removed in the last. Induction helmets only to be used in the charged area. Electricians to be provided with electrical resistant safety shoes having FRP/PVC toe.

n. Dust Gases and fumes

Sub-contractor shall make arrangements to avoid accumulation of dust fumes and gases. Cement handlers inside store or at batching plant and gravel spreader shall be given effective nose masks and jaggery (at least 200g per person per day). DG sets and other machineries like cranes excavators etc. shall have valid and effective PUC certificate and shall have maintained engine with silencer. No IC engine operated machine shall be used in confined and covered area like hall, sheds, store etc. where accumulation due to lack of ventilation can increase to harmful levels. Dedicated arrangements (tanker or tractor with sprinkler) shall be made by the sub-contractors (individual or jointly) to continuously subside the dusts arising out of the movement of the vehicles roads/passages. Welding activities near roof accumulates harmful gases. Welders in such positions shall be provided with effective masks conforming to IS standards.

o. Vehicular Traffic

Speed limits defined within the premises shall strictly be followed by the drivers/commuters of construction as well as other vehicles.
Every construction machinery, man-lift shall display the name, contact no and passport size photograph of the authorised operator (There can be one or more authorised operators).
No one other than operator and co-operator shall sit inside the cabin of any construction machine while it is working.
Construction machineries (tractor, trucks, tippers, JCBs, hydra, Fassi cranes etc. shall never be used as mode of public transport. Machineries like Ajax Fiori and hydra shall not be driven in back direction except for small distances. No overloaded vehicle shall be permitted entry in the project premises.
Over speeding shall be reported and driver/operator shall be barred from entry or shall be penalised.
Drunken drivers shall be barred from entry in the project.
Carrying harmful weapons like knives (>6”), guns etc. shall permanently disqualify the person from entry in project premises.

p. Barricading and floor openings

Every pit deeper than 4 feet (1.2m) shall be barricaded immediately after excavation and will remain barricaded till backfilling.

Pits/trenches drains near roads, passages whether temporary or permanent shall be hard barricaded and well illuminated. Roof edges and openings shall be strictly hard barricaded and illuminated. Height works like masonry works, structure erection, erection by cranes, Lattice tower/beam erection areas shall be barricaded to restrict entry. Areas under charging/commissioning shall be barricaded and caution boards shall be displayed on newly charged areas.

q. Scaffold & Ladder

No bamboo/wooden scaffold shall be allowed to be used. Only tubular steel scaffolds with couplers conforming to the relevant IS codes shall be allowed with base plates. Standard steel or wooden planks to be used as platforms and no packing materials shall be used. All the platforms shall be built with provisions of **top rail at 1m height, mid rail at 0.5m height and toe boards of min 6" height** at floor level. Minimum width of platform shall be 900mm and if wheel barrow is to be used then 1200mm. Means of access to be provided in the form of ladders, ramps or staircase. Multilevel work platforms or those platforms having passage underneath shall be provided with safety net, screen or canopy at each level for protection from falling objects. Platforms shall be free from concrete, debris or other materials. Platforms shall not extend out of the putlogs and shall be secured and fastened. Decking shall be made non-skidding.
Scaffolds under erection shall be tagged **"RED"**, under repair/maintenance/inspection shall be tagged **"YELLOW"** and ready for use shall be tagged **"GREEN"**

Only metal ladders in the construction site and FRP ladders in charged areas shall be allowed. Ladders made from packing materials shall not be used. Ladders shall be securely fixed at bottom, top and long ladders at middle points too at an interval not more than 2400mm and must have a landing at every 6m. Inclination angle should be approximately 1:4 (X:Y) or 75deg. Ladder must extend at least 1m above the platform/access area. Gap between two rungs shall not exceed 300mm. Portable ladder should not be more than 4m in length. Minimum width of the ladder shall not be less than 300mm.

Use of Mobile aluminium scaffold is preferably advisable for erection of transformers/reactors.

r. Illumination

The sub-contractor shall ensure that the areas such as work stations, buildings, batching plants, passages/roads, stores, rest areas, power sources, staircases etc. are illuminated sufficiently to make safe work conditions at site and shall not be less than the relevant IS standards. Excavations/ below ground level structures near passages/roads shall also be sufficiently illuminated.

s. Safety banners/posters, caution boards

Sub-contractors shall display boards and banners in sufficient quantity having safety signs, slogans, important messages, pictures, cautions at prominent locations to promote safety and spread awareness for important precautions such as "Deep Excavation Ahead", Speed Limit", "Charged Area", "Do not operate", "Hard hat area", "No smoking Zone" etc. Boards containing messages of Emergency contacts, First aid facility, rates of minimum wages, working hours, rest day etc. should be displayed at specific areas.

t. Waste management and disposal

Sub-contractor shall make suitable and effective arrangement to remove waste material from site on regular basis and store them in an identified and safe location. Disposal of wastes shall also be done as per manufacturer's instructions or as per the guidelines laid by legal authorities. Re-bars, Cement bags, packing material (wooden/metal/plastic/paper), paint, oil, grease, cables (armour, sheathing, insulation), civil debris, metal chips, GI sheet scraps, batteries etc. are the common waste materials. Sub-contractor

shall arrange disposal of the hazardous wastes/materials in conformance to the legal and contractual requirements only.

u. Inspection of PPEs, T&Ps, Machineries and lifting appliances

All the PPEs, T&P and lifting appliances purchased newly by sub-contractors shall have test certificates which shall be submitted to BHEL office periodically or on demand. There shall be at least monthly joint inspection schedule for inspection of healthiness of all the PPEs, T&Ps and lifting appliances. All the lifting appliances shall be tested and examined by a competent person before taking into use for the first time or after it has undergone any alterations or repairs liable to affect its strength or stability

and also once at least in every twelve months. To confirm quality of the PPEs as per the relevant IS codes, BHEL may ask sub-contractors to get any or all types of PPEs tested through NABL approved lab as per relevant IS codes. At any stage, the 100% cost of such tests shall be in the scope of respective sub-contractors.

v. Cable Laying

Sub-contractor shall ensure cable trenches free from water, mud, debris, snakes, Scorpios, lizards before start of the work in trenches. Cable drum rollers shall be used to pull cables out of drums to avoid twisting of cables. Hand gloves, Safety shoes/gum boots, reflective jackets, safety helmets shall be provided to the workers. Cable laying area shall be well illuminated.

w. Fire Protection

Every sub-contractor has to maintain their working area, store and office area free from bushes. Stacking of flammable materials like wood, paper, plastic, paint, oil, grease, fuel, cotton, gases etc. at isolated place disconnected from other storage and office areas. Adequate arrangements of firefighting means like suitable extinguishers, fire/water buckets, water tanks, sand dunes etc. shall be made by the agency depending upon the fire capacity assessed or as per MSDS. Fire drills and trainings on how to operate fire extinguishers and how to react in case of fire breakouts shall be the part of regular training program. Guards and store persons must be a regular participant of such training programs. A list of trained firefighting persons and periodicity of such training programs shall be submitted to BHEL by every agency and same to be adhered. Sufficient number of fire extinguishers with suitable class shall be placed at such locations where there can be fire hazard like stores, pantry, office, DG set, electrical distribution panels etc.

x. Fencing of exposed rotating parts

Exposed rotating parts poses great threat to the person in vicinity. Such parts need to be fenced/covered. Guards are mandatory of grinders, abrasive cutters. Flywheels of the engines of heavy machines, Diesel engines, DG sets need to be covered. Electric winch machines, pulleys, chains, shafts, exhaust fans at reachable height, table fans, need to be caged/fenced. Such fencing/guard shall not be removed while machinery is in operation.

y. Emergency preparedness response plan and periodic mock drills.

Sub-contractor shall comply JSA (Job Safety Analysis) and arrange to mitigate the effects of identified possible hazards. He shall also define following in response to emergency preparedness:
An emergency assembly point and put a board of the same with information to all in induction training.
Have facility of ambulance or tie-up with nearest hospital for service in minimum possible time (Max-30min) if there is not ambulance inside the premises.
Ensure availability of emergency vehicle with driver all the time at site during work.
Conduct mock-drills on possible risks like electrocution, fall from height, fire, heat stroke etc., record responses and take photographs to submit in BHEL office. Stretchers availability in emergency vehicle or at work place should be well accessible. Provide fire extinguishers of right type at right place in right quantity with information to all. Display emergency contact nos. to various risk locations and at office, service building or at major work locations. Provide first aid training by doctors for and display names of such trained first aiders and fire fighters. Rescue kit with trained staff or man lift or both to rescue a man hanging by safety belt at height. Provide running water tap near chemical storage and handling points. Agencies shall follow emergency response plan prepared by BHEL in each area of work, store and office.

z. Safety reports & Reporting of accidents

BHEL will provide ''formats and checklists'' for the purpose of records/documents pertaining to the compliance of aforesaid clauses. Agencies shall be responsible for strict adherence and compliance for timely generation and fill-up of the checklists and reports. These shall be submitted on weekly and monthly basis as specified in the formats.

Agency shall also promote such an environment that the near misses, incidents and accidents are reported by every person, whosoever witnesses them. These shall help in analysing the trend and taking measures in reducing/stopping the accidents/incidents. Initial reporting can be in any form-by call, SMS, WhatsApp, e-mail, letter etc.
Major and fatal accidents or high potential incidents shall be investigated for route cause and outcomes shall be immediately implemented to check recurrences.

6. General conditions and penalty clauses

Following are the general conditions:

PPEs shall not only bear the ISI mark but also be conforming to the required standards, 100% compliance of the PPEs is mandatory.
Over speeding of vehicles shall attract penalty/notice and recurrence will attract debarring from entry into project premises.
Hiding of facts like incidents, accidents, fake/forged reports/certificates shall also attract penalty/ notice or both. Only approved third party agencies shall be allowed to inspect the machines, T&Ps. Reports shall directly be sent to BHEL/customers by the third parties.
Insurance and TPIs to be renewed before expiry. Machines, T&Ps shall not be allowed to work if renewal delayed. Continuity of WC policy to be maintained religiously by the respective agencies.

Agency shall submit the status report of his labour license, BOCW registration, WC Policy, insurance & TPI validity on monthly basis with list of machineries and T&Ps

Sub-contractors shall also maintain a buffer stock of all the PPEs in at least 20% excess to the present strength of the work force.

If construction power is not drawn as per the guidelines laid in clause no. 5(m), given above, BHEL may take-up this work at the risk and cost of the agency and/or may withhold a sum of min. Rs. 50,000/- (Rs. Fifty Thousand) or more as the site in-charge deems fit till the system is aligned as per aforesaid requirement.

Agencies shall be responsible for the compliance of the above requirements. Failure in one or more clauses/area shall attract a notice or monitory penalty or a combination of above.

Monitory penalty will be

- Rs. 1000/- per person/incident per day for non-conformity in above areas.
- A Major/severe accident shall attract a penalty of Rs. 2,00,000/- per head
- Fatality or permanent disability with total loss of earning capacity, if any, will attract a penalty of Rs. 5,00,000/- (Rs. Five Lakh).
- Further fatality/permanent disability shall attract double the last penalty imposed on the agency.
- Above penalties are exclusive of medical expenses of the victim or compensation to the family through insurance policy (WC Policy or group insurance).
- **Penalties imposed by customer shall be fully transferable to the sub-contractor. In the event of above cases, penalties shall be imposed whichever will be higher.**
- Evaluation of agency's performance on HSE compliance shall be done as per BHEL guide lines/system.

Revision History

Revision Date	Revision No.	Old Text	New Text	Reason	Revised by (with sign)
03.05.2019	00	N/A	Full Document	New Release	
12.10.2021	01	Nil	Attend HSE familiarization program at TBG-HQ with his site management team. This will be a half day long awareness session on HSE requirements and compliances which the agency is supposed to fulfil during contract execution at site. The session shall be taken by TBG HSE department on intimation by TBSM. (at page no. 5)	For better understanding of HSE requirements to agency. (HSE Review meeting dated 23.08.2021)	
12.10.2021	01	Edition	Inclusion of penalty provisions in case of non-deployment of safety person(page-8)	Introduction of HSEP-14	

-:End of Document:-

INDEX

S.No.	Description	Page No.
A.0	**GENERAL INSTRUCTIONS TO TENDERERS**	**04 - 30**
A.1.0	Procedure for submission of Tenders	5
A.2.0	Procedure for evaluation of Price Bids	5
A.12.0	Data to be enclosed	7
A.13.0	Earnest Money Deposit	9
A.14.0	Authorization and Attestation	9
A.15.0	Validity of Offer	10
A.16.0	Execution of Contract	10
A.17.0	Security Deposit	10
A.19.0	Rejection of Tender and Other conditions	12
Annex-A	Details of work executed/Being Executed	15
Annex-B	Proposed Manpower	16
Annex-C	Status of Tools, Plants and Instruments	17
Annex-D	Analysis of Unit Rate	18
Annex-E	Declaration sheet	19
Annex-F	Checklist and Schedule of General Particulars	20
Annex-G	Proforma for Contract Agreement	21
Annex-H	Proforma for BG for Security Deposit	23
Annex-I	Proforma for Performance Guarantee	25
Annex-J	Revised offer in lieu of Deviation withdrawal	28
Annex-K	List of Laboratory Test Equipments	29
Annex-L	BG confirmation letter from Banker	30

B.0	**GENERAL TERMS AND CONDITIONS**	**31-48**
B.1.0	Definitions	32
B.2.0	Law governing the contract and Court Jurisdiction	34
B.3.0	Issue of Notice	34
B.4.0	Use of Land	34
B.5.0	Commencement of Work	35
B.6.0	Measurement of work and Mode of Payment	35
B.7.0	Rights of BHEL	37
B.8.0	Responsibility of Contractor in respect of local laws	38
B.9.0	Responsibility of Contractor in respect of Safety	42
B.10.0	Consequences of Cancellation	45
B.11.0	Insurance	46
B.12.0	Strikes and Lockouts	46
B.13.0	Force Majeure	47
B.14.0	Guarantee	47
B.15.0	Arbitration	47
C.0	**SPECIAL CONDITIONS OF CONTRACT**	**49- 69**
C.1.0	Instructions to Tenderers	50
C.2.0	Performance Bond	50
C.3.0	Site Drainage	51
C.4.0	Execution of Work	51
C.5.0	Inspection and Stage approval of work	51
C.6.0	Completion of work	52
C.7.0	Uncovering and Adjustment of Errors	52
C.8.0	Discrepancies and Adjustment of Errors	52
C.9.0	Deviations	54

C.10.0	Valuation of Deviations	54
C.11.0	Record and Measurement	55
C.12.0	Contractor's Supervision	56
C.13.0	Labour and Supervision Staff	57
C.14.0	Plant and Equipment at Site	58
C.15.0	Compliance to Regulations and Bye laws	58
C.16.0	Materials obtained from Excavation	58
C.17.0	Treasure, Trove, Fossils etc.	59
C.18.0	Protection and Security	59
C.19.0	Site office and Stores	59
C.20.0	Power and Water	59
C.21.0	Temporary Workshop, Stores, consumables	60
C.22.0	Materials	60
C.23.0	General	62
C.24.0	Delay and Extension of Time	63
C.25.0	Compensation/penalty for Delay	63
C.26.0	Price Variation	63
C.27.0	Over run Charges	65
C.28.0	Octroi and other Duties	65
C.29.0	Terms of Payment	65
C.30.0	Cement and Steel	67
C.31.0	Quality Assurance	68
C.32.0	Clearance of site and Repairs	68
C.33.0	Protection of Work	69
C.34.0	Record of Materials Consumed	69
C.35.0	Secured Advance	69

SECTION- A

GENERAL INSTRUCTIONS TO TENDERERS

SECTION - A

GENERAL INSTRUCTIONS & INFORMATION FOR TENDERER

A.1.0: PROCEDURE FOR SUBMISSION OF TENDERS

Bidder **has** to submit offer directly through E-PROCURMENT MODE. Bidder may visit **https://eprocurebhel.co.in**

Procedure for Submission of Tenders through e tendering : The tender is also floated online through our E-Procurement Site https://eprocurebhel.co.in . The bidder may respond by submitting their offer online in our e-Procurement platform at https://eprocurebhel.co.in
Offers are invited in two-parts only.
Documents Comprising the e-Tender
The tender shall be submitted online EXCEPT EMD (which shall be submitted in physical form (as described in NIT cl. No.1) above as mentioned below:

a. Technical Bid (Un priced Tender)
All Technical details (eg. Eligibility Criteria requested (as mentioned below)) should be attached in e-tendering module, failing which the tender stands invalid & may be REJECTED. Bidders shall furnish the following information along with technical tender (preferably in pdf format):
i. Earnest money Deposit (EMD) furnished in accordance with NIT Clause 4.0
ii. Technical Bid (without indicating any prices).

b. Price Bid:
i. Prices are to be quoted in the **attached Price Bid format online on e-tender portal**.
ii. The price should be quoted for the accounting unit indicated in the e-tender document.
iii. Note: It is the responsibility of tenderer to go through the Tender document to ensure furnishing all required documents in addition to above, if any. Any deviation would result in REJECTION of tender and would not be considered at a later stage at any cost by BHEL.
iv. A person signing (manually or digitally) the tender form or any documents forming part of the contract on behalf of another shall be deemed to warrantee that he has authority to bind such other persons and if, on enquiry, it appears that the persons so signing had no authority to do so, the purchaser may, without prejudice to other civil and criminal remedies, cancel the contract and hold the signatory liable for all cost and damages.
v. A tender, which does not fulfil any of the above requirements and/or gives evasive information/reply against any such requirement, shall be liable to be ignored and rejected.

c. Uploading of the price bid in prequalification bid or technical bid may **RESULT IN REJECTION** of the tender.
d. Tenders shall be uploaded with all relevant PDF/zip format. The relevant tender documents should be uploaded by an authorized person having Class 3- SHA2- 2048 BIT- SIGNING & ENCRYPTION digital signature certificate (DSC).

A.2.0: PROCEDURE FOR EVALUATION OF PRICE BIDS:

The following shall be Evaluation *Procedure* of the prices offered: -

Payment terms, Completion Schedule and other contractual terms & conditions shall be as per Tender Specifications.

No deviations are acceptable. Offers with deviations are likely to be rejected.

However, if the bidder insists on any technical or commercial deviations from the specifications and / or tender conditions, **the price implication, if any, of withdrawing the deviations must be submitted along with the price bid in a separate sealed envelope** super-scribed "Price implication for withdrawal of deviations". No price implication for withdrawal of deviation shall be accepted at a later date, after opening of technical bid.

The offers of new vendors may not be considered even after opening of price bid if the vendor is not found suitable on final assessment.

A.3.0 This tender specification as a whole, furnishing all the details and other documents as required in the following pages, shall be duly signed & sent in a sealed cover superscribing the name of work as given in the tender enquiry.

A.4.0 The tender shall be addressed to: OFFICER INVITING THE TENDER AS INDICATED IN THE TENDER ENQUIRY.

A.5.0 DELETED

A.6.0 Tenders shall be opened by the concerned officers of BHEL at the time, date and venue as specified in the tender notice.

A.7.0 The tenderer shall closely pursue all the clauses, specifications and drawings indicated in the Tender Documents before quoting. Should the tenderer have any doubt about the meaning of any portion of the Tender Specifications or find discrepancies/omission in the drawings or the tender documents issued are incomplete or shall require clarification on any of the technical aspect, scope of work etc. he shall at once contact the authority inviting the tender for clarification before the submission of the tender.

A.8.0 Before tendering, the tenderer are advised to inspect the site of work & the environments and be acquainted with the actual working and other prevalent conditions, facilities available, position of material and labour. No claim will be entertained later on the grounds of lack of knowledge.

A.9.0 Tenderer must fill up all the schedules and furnish all the required information as per the instructions given in various sections of the tender specification. Each and every page of the Tender Specification must be SIGNED AND SUBMITTED ALONG WITH THE OFFER by the Tenderer in token of complete acceptance thereof. The information furnished shall be complete by itself.

A.10.0 The tenderer shall quote the rates in English Language and international numerals. Total price offered should be entered in figures as well as in words. In case of difference in price between words & figures, the price in words will be treated as valid price. For the purpose of the tender, the metric system of units shall be used.

A.11.0 All entries in the tender shall either be typed or be written in ink. Erasers and overwriting are not permitted and may render such tender liable to summary rejection. All cancellations and insertions shall be duly attested by the tenderer.

A.12.0 **DATA TO BE ENCLOSED:**

A.12.1 An attested copy of the Power of Attorney, in case the tender is signed by an individual other than the sole proprietor, shall be attached.

A.12.2 IN CASE OF INDIVIDUAL: His full name, experience, address and nature of business.

OR

IN CASE OF PARTNERSHIP FIRMS: The names of all the partners with address and their experience. A copy of the partnership deed/instrument of partnership duly certified by the Notary shall be enclosed.

OR

IN CASE OF COMPANIES: Date & place of registration including date of commencement certificate in case of Public Companies and the nature of business carried on by the company. Certified copies of Memorandum and Articles of Association are also to be furnished. Also indicate names, addresses and experience of the Directors.

A.12.3 Three years financial turn over (certified), present commitments with all orders in hand, value of total order, value completed, and balance with completion dates as per ANNEXURE-A.

A.12.4 **ORGANIZATION CHART & METHODS STATEMENT:**

The organization pattern and the manpower that are totally available with him & that will be deployed by the tenderer for this work in the form of month wise and category wise deployment plan duly indicating the number of Engineers, Supervisors, Skilled and Unskilled Workers etc. as per proforma at ANNEXURE-B shall be submitted. Work schedule (detail bar chart) and a methods statement showing how the contractor proposes to mobilise (considering the difficulties in work that may be encountered) and complete the jobs giving an idea of extent of proposed mechanisation for the execution of the jobs shall also be submitted along with ANNEXURE-B.

A.12.5 A list of machines, tools and tackles that the tenderer is having and those that will be deployed on this job giving proof of ownership or any tie-up of equipment as per proforma enclosed at ANNEXURE-C.

A.12.6 Analysis of unit rate quoted as per proforma enclosed at ANNEXRE-D.

A.12.7 Declaration sheet as per proforma enclosed at ANNEXURE-E.

A.12.8 Check-list as per proforma enclosed at (ANNEXURE-F).

A.12.9 Certificate from Schedule Bank to prove his financial capacity to undertake the work or Solvency Certificate from the concerned Government Authority.

A.12.10 A certificate of Income Tax / Sales Tax verification from the appropriate authority in the forms prescribed duly indicating annual turnover. These certificates shall be valid for one year from the date of issue or for the period prescribed therein for all tenders submitted during the period.

A.12.11 In addition to the above, the particulars required elsewhere in the tender documents.

A.12.12 NOTE: In terms of clauses A.12.1 to A.12.11 above, all the data required to be enclosed with the tender need to be furnished neatly typed, signed & stamped in the given formats only (in the form of separate sheets) failing which the tender may be considered as incomplete and is liable for rejection. Documentary proof wherever necessary also need to be enclosed.

A.13.0 **EARNEST MONEY DEPOSIT:**

Every tender must be accompanied by the prescribed amount of Earnest Money Deposit (EMD) mentioned in NIT.

1. Mode of EMD deposit:

EMD can be submitted in any one of the following modes:

i) Cash deposit as permissible under the extant Income Tax Act (before tender opening),

ii) Electronic Fund Transfer credited in BHEL account (before tender opening). Details of BHEL account mentioned in tender document.

iii) Banker's cheque/Pay order/Demand Draft, in favour of `BHEL' and payable at New Delhi (Along with offer)

iv) Fixed Deposit Receipt (FDR) issued by schedule Banks/Public Finance Institutions as defined in the companies ACT (FDR should be in the name of the contractor, a/c BHEL

v) In case total EMD amount is more than Rs. 2 Lakh, the amount in excess of Rs. 2 lakh may be accepted in the form of Bank Guarantee from scheduled bank. The Bank Guarantee in such cases shall be valid for at least six months.

No other form of EMD remittance shall be acceptable to BHEL.

2. Forfeiture of EMD

EMD by the bidder will be forfeited as per NIT conditions, if

i) After opening the tender and within the offer validity period, the bidder revokes his tender or makes any modification in his tender which is not acceptable to BHEL.

ii) The contractor fails to deposit the required Security deposit or commence the work within the period as per LOI/contract.

3. EMD by the tenderer shall be withheld in case any action on the tenderer is envisaged under the provision of extant “Guidelines on Suspension of business dealing with supplier/contractors” and forfeited/ released based on the action as determined under these guidelines.

4. In the case of unsuccessful bidders, the Earnest Money will be refunded to them within a reasonable time after award of work.

5. EMD shall not carry any interest.

6. EMD of successful bidder shall be retained as part of Security Deposit.

7. Bidders may please note that “One Time EMD” provision stands deleted. Hence, bidders who have deposited Rs. 2 Lakh as `One Time EMD' with BHEL are also required to submit the requisite amount of EMD.

8. **No MSE benefits shall be given to MSEs bidder for WORKS CONTRACT. Please refer clause no. P (facilities provided to MSEs) for detail.**

A.14.0 **AUTHORIZATION AND ATTESTATION:**

Tenders shall be signed by persons duly authorized/empowered to do so. Certified copies of such authority & relevant documents shall be submitted along with the tenders.

A.15.0 **VALIDITY OF OFFER:**

THE OFFER SHALL BE KEPT OPEN FOR ACCEPTANCE FOR A MINIMUM PERIOD OF **FOUR MONTHS** FROM THE DATE OF OPENING OF TENDERS. In case BHEL calls for negotiations, such negotiations shall not amount to cancellation or withdrawal of the original offer which shall be binding on the tenderer.

A.16.0 **EXECUTION OF CONTRACT:**

The successful tenderer's responsibility under this contract commences from the date of issue of the Letter of Intent by BHEL. The successful tenderer shall be required to execute an agreement in the prescribed form as per ANNEXURE-G with BHEL within a reasonable time after the acceptance of his tender and in any case before submitting the first bill for payment. The expenses for completion, stamping and registration of the agreement with prescribed authority if necessary, shall be borne by the contractor.

A.17.0 **SECURITY DEPOSIT:**

Security Deposit means the security provided by the Contractor towards fulfilment of any obligations in terms of the provision of the contract.

1. Upon acceptance of Tender, the successful Tenderer should deposit the required amount of Security Deposit for satisfactory completion of work. **The total amount of Security Deposit will be 5% of the Contract Value. EMD of the successful tenderer shall be converted and adjusted towards the required amount of Security Deposit.**

2. Mode of Security deposit:

The security Deposit should be furnished **before start of the work** by the contractor.

"Bidders agrees to submit performance security required for execution of the contract within the time period mentioned. In case of delay in submission of Performance security, enhanced performance security which would include interest (SBI rate + 6%) for the delayed period, shall be submitted by the bidder. Further, if performance security is not submitted till such time the first bill becomes due, the amount of performance security due shall be recovered as per terms defined in NIT / Contract, from the bills along with due interest".

The balance amount to make up the required Security Deposit of 5% of the contract Value may be furnished in any of the following forms:

i) Cash (as permissible under the extant Income Tax Act)

ii) Local cheques of scheduled banks (subject to realization) / Pay Order / Demand Draft / Electronic Fund Transfer, in favour of BHEL.

iii) Bank Guarantee from Scheduled Banks / Public Financial Institutions as defined in the Companies Act. The Bank Guarantee format for Security Deposit is enclosed.

iv) Fixed Deposit Receipt issued by Scheduled Banks / Public Financial Institutions as defined in the Companies Act. The FDR should be in the name of the contractor, A/C BHEL and duly discharged on the back.

v) Securities available from Indian Post Offices such as National Savings Certificates, Kisan Vikas Patras etc. (Certificates should be held in the name of Contractor furnishing the security and duly endorsed/hypothecated/pledged, as applicable, in favour of BHEL and duly discharged on the back).

(NOTE: BHEL will not be liable or responsible in any manner for the collection of interest or renewal of the documents or in any other matter connected therewith)

3. Submission of Security Deposit:

i) At least 50 % of the required Security Deposit, including the EMD, shall be submitted before start of work. Balance of the Security Deposit can be submitted by way of deduction of 10% of the gross amount progressively from each running bills of the contractor till the total amount of the required Security Deposit is collected.

ii) If the value of work done at any time exceeds the contract value, the amount of Security Deposit shall be correspondingly enhanced and the additional Security Deposit shall be immediately deposited by the Contractor or it shall be recovered from payment/s due to the Contractor.

iii) The recoveries made from running bills (cash deduction towards balance SD amount) can be released against submission of equivalent Bank Guarantee in acceptable form, but only once, before completion of work, at the discretion of BHEL.

4. The BG shall be submitted only through the Banker. Along with the BG, the Bank shall also furnish a letter of confirmation (in the prescribed formats enclosed with general conditions of contract).

5. The validity of the Bank Guarantee furnished towards Security Deposit shall be up to three months more than the period of completion of work as stipulated in the LOI and the same will be kept valid by proper renewal till the completion of the work.

6. BHEL reserves the right of forfeiture of Security Deposit in addition to other claims and penalties in the event of the contractor's failure to fulfil any of the contractual obligations or in the event of termination of contract as per terms and conditions of the contract. BHEL reserves the right to set off the Security Deposit, against any claims of any other contracts with BHEL.

7. Conditions for acceptance of bank guarantees

Contractors are advice to obtain Bank Guarantee preferably from any of the following BHEL consortium banks

Sl. No.	Nationalized Bank	Sl. No.	Public Sector Banks
1	Allahabad bank	20	IDBI
2	Andhra bank		
3	Bank of Baroda		**Foreign bank**
4	Canara Bank		
5	Corporation bank	21	CITI Bank N.A
6	Central bank of India	22	Deutsche Bank AG
7	Indian Bank	23	The Hongkong and Shanghai Banking Corporation Limited
8	Indian Overseas Bank	24	Standard Chartered Bank
9	Oriental bank of Commerce	25	J P Morgan
10	Punjab National Bank		
11	Punjab & Sindh Bank		**Private bank**
12	State Bank of India	26	Axis Bank
13	State Bank of Hyderabad	27	The Federal Bank Limited
14	Syndicate Bank 28 HDFC		
15	State Bank of Travancore	29	Kotak Mahindra Bank
16	UCO Bank	30	ICICI
17	Union Bank of India	31	Indusind Bank
18	United Bank of India	32	Yes Bank
19	Vijaya Bank		

Bank Guarantees from Banks outside BHEL's consortium shall be as below:

The Bank Guarantees of all Public sector banks can be accepted (in addition to consortium banks)

The Bank Guarantees of Co-operative banks shall not be accepted.

Bank Guarantees of other than consortium bank and public sector bank can be accepted subject to an overall exposure limit (at New Delhi) of Rs. 10 crores for banks with networth of more than Rs. 500 crores as on last balance sheet date and Rs 5 crores for banks with net worth between Rs. 350 to Rs 500 crores (A certificate and copy of latest Balance Sheet to be given by the Bank at the time of submission of Bank Guarantees).

In case of private sector banks a clause to be incorporated in the text of Bank Guarantee that it can be enforceable by being presented at any branch of the bank.

In case of foreign vendors the bank guarantees issued by foreign banks may be confirmed by our consortium bank in India.

In case of Bank Guarantees given by Non-Consortium banks (Private sector or Public sector), the Bank Guarantees are to be enforceable in New Delhi or the town/ city in which the sector office is located.

1. **RETURN OF SECURITY DEPOSIT:**

If the contractor duly performs and completes the work in all respects to the entire satisfaction of BHEL and presents an absolute "No demand certificate", returns properties belonging to BHEL, taken, borrowed or hired by him for carrying out the said works, and furnishes performance bond BG in the prescribed proforma as per ANNEXURE-J, Security Deposit will be released to the contractor after deducting all costs, expenses and other amounts that are to be paid to BHEL under this contract or other contracts entered into with the contractor. It may be noted that in no case the Security Deposit shall be refunded/released prior to passing of final bill.

A.18.0 No interest shall be payable by BHEL on EMD, Security Deposit or on any money due to the contractor.

A.19.0 **REJECTION OF TENDER & OTHER CONDITIONS:**

A.19.1 The decision of acceptance of tender will rest with BHEL which does not bind itself to accept the lowest tender or any tender and reserves to itself full rights for the following without assigning any reasons whatsoever:

(a) To reject any or all of the tenders.
(b) To split up the work amongst two or more Tenderer.
(c) To award the work in part.
(d) In either of the contingencies stated in (b) and (c) above to modify the time for completion suitably.

A.19.2 Conditional and unwitnessed tenders, tenders containing absurd or unworkable rates & amounts, tenders which are incomplete or otherwise considered defective and tenders not in accordance with the tender conditions, specifications etc. are liable to be rejected.

A.19.3 In case of any adverse information is received concerning performance, capability or conduct of the tenderer after issue of tender enquiry, BHEL reserves the right to reject the offer at any stage as deemed fit.

A.19.4 Offers with inadequate Tools & Plants, Manpower Deployment Plan, Method Statement are liable for rejection.

A.19.5 In case the present commitments of the tenderer is such that award of further work is likely to affect performance in the work under this tender, its offer is liable for rejection.

A.19.6 Offers from tenderer are liable for rejection if the tenderer is not found suitable after preliminary/ final assessment by BHEL.

A.19.7 If a tenderer expires after the submission of his tender or after the acceptance of his tender, BHEL may at its discretion, cancel such tender. If a partner of a firm expires after the submission of the tender or after the acceptance of the tender, BHEL may cancel such tender at its discretion unless the firm retains its character.

A.19.8 BHEL will not be bound by any Power of Attorney granted by the tenderer or by changes in the composition of the firm made subsequent to the execution of the contract. BHEL may, however, recognise such Power of Attorney and changes after obtaining proper legal advice, the cost of which will be chargeable to the contractor concerned.

A.19.9 If the tenderer deliberately gives wrong information in his tender, BHEL reserves the right to reject such tender at any stage or to cancel the contract, if awarded, and forfeit the Earnest Money/Security Deposit/any other moneys due.

A.19.10 Canvassing in any form in connection with the tender is strictly prohibited and the tenders submitted by the contractors who resorts to canvassing are liable to be rejected.

A.19.11 Should a tenderer or contractor or in the case of a firm or company of contractors/ one or more of its Partners/ Share holders/ Directors have a relation or relations employed in BHEL, the authority inviting tender shall be informed to the fact along with the offer, failing this, BHEL may, at its sole discretion reject the tender or cancel the contract and forfeit the Earnest Money/ Security Deposit.

A.19.12 The successful tenderer should not sub-contract the part or complete work detailed in the tender specifications without written permission of BHEL. The tenderer is solely responsible to BHEL for the work awarded to him.

A.19.13 NO DEVIATIONS ARE ACCEPTABLE. OFFERS WITH DEVIATIONS ARE LIKELY TO BE REJECTED. HOWEVER, IF THE BIDDER INSISTS ON ANY TECHNICAL OR COMMERCIAL DEVIATIONS FROM THE SPECIFICATIONS AND / OR TENDER CONDITIONS, **THE PRICE IMPLICATION, IF ANY, OF WITHDRAWING THE DEVIATIONS MUST BE SUBMITTED ALONG WITH THE PRICE BID IN A SEPARATE SEALED ENVELOPE** SUPER-SCRIBED "PRICE IMPLICATION FOR WITHDRAWAL OF DEVIATIONS". NO PRICE IMPLICATION FOR WITHDRAWAL OF DEVIATION SHALL BE ACCEPTED AT A LATER DATE, AFTER OPENING OF TECHNICAL BID.

ANNEXURE - A

DETAILS OF WORK EXECUTED/BEING EXECUTED

A) WORK EXECUTED

Sl. No.	Financial Year	Customer	Description of work	Total order value	Remarks

B) WORK BEING EXECUTED

Sl. No.	Customer	Description of work	Total Value	Value of the portion completed	Actual start date	Expected completion date	Remarks

(SIGNATURE OF TENDERER)
WITH STAMP

ANNEXURE - B

(A) **PROPOSED MANPOWER (ENGINEERS/ SUPERVISORS) RESOURCES FOR EXECUTION OF WORK**

Sl. No.	Name of the staff	Qualification	Experience in years	Remarks

(B) **MONTH WISE MANPOWER DEPLOYMENT PLAN**

Sl. No.	Category	Indicate No. of persons to be deployed in each month								
		1st	2nd	3rd	4th	5th	6th	7th	8th	and so on

(C) **Total man days planned to be deployed for the work ..... Man days**

(SIGNATURE OF TENDERER)
WITH STAMP

ANNEXURE - C

(A) **STATUS OF TOOLS, PLANTS & INSTRUMENTS**

Sl. No.	Name of Equipment	Quantity owned	Registration No.	Documents enclosed for proof of Ownership / tie-up	Present Location	Quantity proposed to be deployed for this job

B) **MONTH WISE TOOLS, PLANTS & INSTRUMENTS DEPLOYMENT PLAN**

Sl. No.	Description of Tools, Plants & Instruments	Indicate Nos. to be deployed in each month							
		1st	2nd	3rd	4th	5th	6th	7th	and so on

(SIGNATURE OF TENDERER)
WITH STAMP

ANNEXURE - D

ANALYSIS OF UNIT RATE

Sl. No.	Description	Percentage of the unit rate	Remarks
01.	Salary and wages for staff and works		
02.	Materials a) ..... b) ..... c) ..... d)		
03.	Depreciation and maintenance for Tools and Plants		
04.	Depreciation and maintenance for other items		
05.	Establishment and administrative expenses of site		
06.	Overheads		
07.	Profit		

(SIGNATURE OF TENDERER)
WITH STAMP

ANNEXURE - E

DECLARATION SHEET

I ..... hereby certify that all the information and data furnished by me with regard to this Tender Specification No..... are true and complete to the best of my knowledge. I have gone through the specification, conditions and stipulations in detail and agree to comply with the requirements and intent of specifications.

I further certify that I am the duly authorised representative of the under mentioned tenderer and a valid power of attorney to this effect is also enclosed.

TENDERER'S NAME AND ADDRESS

AUTHORISED REPRESENTATIVE'S SIGNATURE WITH NAME AND ADDRESS

ANNEXURE - F

CHECKLIST & SCHEDULE OF GENERAL PARTICULARS

NOTE: Tenderers are requested to fill in the following details and no column should be left blank.

1.	Name & Address of the Tenderer	:	
2.	Phone/Fax No. (Office)	:	
3.	email ID	:	
4.	Name & designation of the official of the tenderer to whom all the references shall be made	:	
5.	Tenderer's Proposal No. & date	:	
6.	Whether EMD submitted (by cash/ Bank Guarantee/Bank Draft)	:	By.....
7.	Validity of offer/rates quoted for six months from the date of opening of tender	:	Yes/No
8.	Attested copy of power of attorney as per Clause-A.12.1	:	Yes/No
9.	Solvency Certificate submitted as per Clause-A.12.9	:	Yes/No
10.	Income Tax/Sales Tax Certificate submitted as per Clause-A.12.10	:	Yes/No
11.	Details of work executed/being executed as per Annexure-A	:	Yes/No
12.	Month wise & Category wise manpower deployment plan as per Annexure-B	:	Yes/No
13.	Status of Tools, Plants and Instruments & their month wise deployment plan as per Annexure-C	:	Yes/No
14.	Analysis of unit rate quoted as per Annexure-D	:	Yes/No
15.	Declaration sheet as per Annexure-E	:	Yes/No
16.	Request for registration (for new tenderers) submitted	:	Yes/No

Date ..... (SIGNATURE OF TENDERER)
WITH STAMP

WITNESS : (Signature with full particulars)

1.

2.

ANNEXURE - G

PROFORMA FOR C O N T R A C T A G R E E M E N T

CONTRACT NO. :
LETTER OF INTENT NO. :
WORK ORDER NO. :

1. The Contract Agreement entered into the day of ....., 20... (..... day of .....two thousand and……. ....) at New Delhi, between M/S BHARAT HEAVY ELECTRICALS LIMITED, TRANSMISSION BUSINESS GROUP, New Delhi , having it's Registered Office at BHEL House, Siri Fort, New Delhi - 110 049 (hereinafter called the FIRST PARTY which expression shall include their executors, administrators, successors and permitted assigns)

AND

M/S ..... (hereinafter called the SECOND PARTY which expression shall include their executors, administrators, successors and permitted assigns).

2. And whereas the FIRST PARTY called for the offer for the work of..... as per approved specifications, drawings and quality plan at ..... as per Tender Specification No..... , dated .....

3. Whereas the SECOND PARTY submitted their offer No. ..... dated ..... against above.

4. Whereas the FIRST PARTY has accepted the offer referred to above & issued Letter of Intent No....., dt..... and also detailed Work Order No...., dt .....

5. Whereas the SECOND PARTY has agreed to work as Sub-Contractor of the FIRST PARTY on the conditions specified in the Tender Specifications at a contract price of Rs..... (Rupees.....) at .....

6. Now, therefore it is hereby mutually agreed to by and between the parties hereto as under :

   a) The SECOND PARTY shall execute the works of ..... at ..... on the conditions specified in Tender Specifications of FIRST PARTY and Letter of Intent referred to herein before at a total contract price of Rs..... (Rupees .....)

   b) That the SECOND PARTY shall organise all activities and mobilisation of facilities so that the work specified herein before is completed by .....as per the time bound programme mentioned in the Tender Specifications.

c) That all disputes arising out of or relating to this agreement shall be referred to the sole Arbitrator as per arbitration clause mentioned in the Tender Specifications. The Arbitrator from time to time with the consent of the parties enlarge the time for making and publishing award without reference to the court for the purpose.

d) That the jurisdiction in all suits or claims arising out of this agreement shall be of New Delhi Courts only.

e) The Following documents shall form part of this agreement: -

i)

ii)

iii)

iv)

v)

vi)

7. Deviation Limit : The contract value is subject to deviations depending upon the actual requirement within plus or minus 30%. Quantities of individual items may vary to any extent or may get deleted.

8. Terms of Payment : The terms of payment applicable to this contract shall be those covered under Point No.... of Work Order dt. ..... and as per Tender Specifications.

9. Abandoning the work : In the event of the SECOND PARTY abandoning the work, FIRST PARTY reserves the right to get the unfinished work done at the risk and cost of the SECOND PARTY.

10. All other terms and conditions shall be as stipulated in the Tender Documents.

11. This contract agreement consists.... pages.

IT WITNESS WHEREOF, the parties have signed this agreement on the date, month and year first above written in presence of

For and on Behalf of
(FIRST PARTY)

WITNESS (WITH ADDRESS)

For and on Behalf of
(SECOND PARTY)

1.
2.

ANNEXURE - H

PROFORMA FOR BANK GUARANTEE (FOR SECURITY DEPOSIT)

1. In consideration of the Bharat Heavy Electricals Limited, having its Registered Office at BHEL House, Siri Fort, New Delhi-110 049 through its Unit/Division at Industry Sector-TBG, New Delhi hereinafter called BHEL, having agreed to exempt..... (hereinafter called "the said contractor(s)") from the demand, under the terms and conditions of the LOI/WO, dated ... made between BHEL and M/s..... for the work ..... of (Name of work) (hereinafter called "the said Agreement") of Security Deposit / mobilisation advance for the due fulfilment by the said contractor(s) of the terms and conditions contained in the said Agreement, on production of Bank Guarantee for Rs.... (Rupees..... only). We, ... (indicate the name of the Bank) (hereinafter referred to as "Bank") at the request of the contractor(s) do hereby undertake to pay to BHEL an amount not exceeding Rs..... against any loss or damage caused to or suffered or would be caused to or suffered by BHEL, by reason of a breach by the said contractor(s), of any of the terms of conditions contained in the said agreement.

2. We, ... (indicate the name of the Bank) do hereby undertake to pay the amounts due and payable under this guarantee without any demur, merely on a demand from BHEL, stating that the amount claimed is due by way of loss or damage caused to or would be caused to or suffered by BHEL by reason of breach by the said contractor(s) of any of the terms or condition(s) failure to perform the said agreement or by reason of the contractor(s) failure to perform the said agreement. Any such demand made on the Bank shall be conclusive as regards the amount due and payable by Bank under this guarantee. However, our liability under this guarantee shall be restricted to an amount not exceeding Rs.....

3. We, ... (Indicate the name of the Bank) undertake to pay BHEL any money so demanded not withstanding any dispute or disputes raised by the Contractor(s) in any suit or proceeding pending before any court or Tribunal relating there to, our liability under these presents being absolute and unequivocal. The payment so made by us under this bond shall be a valid discharge of our liability for payment there under and the contractor(s) shall have no claim against us for making such payment.

4. We, ...(indicate the name of the Bank) further agree that the guarantee herein after contained shall remain in full force and effect during the period that would be taken for the performance of the said agreement & that it shall continue to be enforceable till all the dues of BHEL under or by virtue of the

said agreement have been fully paid and its claims satisfied or discharged or till BHEL certifies that the terms and conditions of the said agreement have been fully and properly carried out by the said contractor(s) & accordingly discharges this guarantee. Unless a demand or claim under this guarantee is made on us in writing on or before..... we shall be discharged from all liability under this guarantee thereafter.

5. We,.....(indicate the name of the Bank) further agree with BHEL that BHEL shall have the fullest liberty without our consent & without affecting in any manner our obligations hereunder to vary any of the terms & conditions of the said agreement or to extend time performance by the said contractor(s) from time to time or to postpone for any time or from time to time any of the powers exercisable by BHEL against the said contractor(s) and to forbear or enforce any of the terms and conditions relating to the said agreement & we shall not be relieved from our liability by reason of any such variation, or extension being granted to the said contractor(s) or for any forbearance, act or omission on the part of BHEL or any indulgence by BHEL to said contractor(s) or by any such matter or thing whatsoever which under the law relating to sureties would, but for this provision, have effected of so relieving us.

6. This guarantee will not be discharged due to the change in the constitution of the Bank or the Contractor(s).

7. We, ...(indicate the name of the Bank) lastly undertake not to revoke this guarantee during its currency except with the previous consent of BHEL in writing.

Dated the ..... Day of .....20...

For .....(indicate the name of the Bank)

WITNESS : 1)

2)

(SIGNATURE OF BANK REPRESENTATIVE WITH SEAL)

NOTE

1. The above format is drawn upon the model form jointly evolved by the Reserve Bank of India, the Indian Banks Association and the Ministry of Finance, Government of India as circulated by Indian Banks Association, Bombay vide their letter No. LA/14-61/808, dated 01.05.1980.

2. As such no deviations are acceptable.

ANNEXURE – I

PROFORMA FOR PERFORMANCE GUARANTEE

(to be used in appropriate value non - judicial stamp paper)

1. This deed of guarantee made this ..... day of ..... 20… by ..... Bank Limited ..... in favour of Bharat Heavy Electricals Limited having their registered office at BHEL House, Siri Fort, New Delhi - 110 049.

2. Whereas M/s ..... (hereinafter called the CONTRACTOR / SELLER have entered into a Contract bearing No. ..... dated..... (hereinafter called the CONTRACT) for supply / civil works /erection, testing and commissioning of M/s Bharat Heavy Electricals Limited (hereinafter called the COMPANY).

3. And whereas the said CONTRACT Inter - alia provides that the CONTRACTOR / SELLER shall pay to the COMPANY a sum of Rs. ..... only towards Performance Guarantee in the form and manner therein specified.

4. And whereas the SELLER / CONTRACTOR have approached ..... Bank Limited (hereinafter referred to as the GUARANTOR) and at their request and in consideration of the arrangement arrived at between the CONTRACTOR and the GUARANTOR, the GUARANTOR has agreed to give the Guarantee as hereinafter mentioned in favour of the COMPANY.

NOW THIS DEED WITNESSES AS FOLLOWS:

5. The GUARANTOR by the hand of Mr. ..... and its lawfully and fully constituted attorney and do hereby guarantee the due and faithful performance of the said CONTRACT and do hereby irrevocably undertake and promise to pay the COMPANY without any demur merely on demand made by them a sum not exceeding Rs. ..... only in case the COMPANY sustains any loss or damage by reason of any breach, default by the CONTRACTOR / SELLER of any of the terms, conditions, stipulations or undertakings or any one of them contained in the said CONTRACT and the tender documents attached hereto and for payment of any moneys payable by the CONTRACTOR / SELLER to the COMPANY under the terms and conditions of the said CONTRACT. The decision of the COMPANY regarding the breach, default, loss, damage and payment shall be conclusive and binding in the GUARANTOR, irrespective of the fact whether the CONTRACTOR / SELLER admits or denies such claims or questions its correctness in any court, tribunal or arbitration proceedings or before any other authority.

6. The COMPANY shall have the fullest liberty without effecting in any way the liability of the GUARANTOR under this guarantee, from time to time to vary any of the terms and conditions of the CONTRACT or extend time by the SELLER / CONTRACTOR or to postpone for any time and from time to time any of the powers exercisable by its against the SELLER / CONTRACTOR and either to enforce or forbear from enforcing any of terms and conditions governing the CONTRACT or securities available to the COMPANY and the GUARANTOR shall not be released from its liability under these presents by any exercise by the COMPANY of the liberty with reference to the matters aforesaid or by reason of time being given to the SELLER or any other forbearance, act or omission on the part of the COMPANY or any indulgence by the COMPANY to the SELLER / CONTRACTOR or of any other matter or thing whatsoever which under the law relating to sureties, would but for this provision have the effect of so releasing the GUARANTOR / CONTRACTOR from its liability under this Guarantee.

7. This Guarantee shall remain in full force and effect and the GUARANTOR shall be liable under the same irrespective of any concession or time being granted by the COMPANY to the CONTRACTOR in or for fulfilling the said CONTRACT and this Guarantee shall remain in full force irrespective of any change in terms and conditions, stipulations or any variations in the terms of CONTRACT irrespective of whether notice of such change and / or variation is given to the GUARANTOR or not and the claim to receive such notice of any change and or variation of the terms / or conditions of the CONTRACT is hereby specially waived by the GUARANTOR.

8. The GUARANTEE herein contained shall not be determined, prejudiced or effected by the liquidation or winding up or insolvency of or change in the constitution of the CONTRACTOR but shall in all respects and for all purposes be binding and operative until all payments or all moneys due or that may hereafter become payable to the COMPANY are paid in respect of any liability or obligation of the CONTRACTOR under the CONTRACT.

9. The GUARANTOR further agree that the Guarantee herein contained shall remain in full force and effect during the period that would be taken for the commencement of the CONTRACT till end of the CONTRACT and its claim satisfied or discharged and till the COMPANY certified that the terms and conditions of the CONTRACT have been fully and properly carried out by the SELLER and accordingly discharges this guarantee, subject, however, that the COMPANY shall have no claim under this Guarantee after ..... months from the date of completion of the Guarantee has been served on the

GUARANTOR before the expiry of the said period in which case the same shall be enforceable against GUARANTOR not withstanding the fact that the same is enforced after expiry of said period.

The GUARANTOR undertake not to revoke this Guarantee during the period it is in force except with the previous consent of the COMPANY in writing and agree that any liquidation or winding up or insolvency or dissolution or any change in the constitution of the SELLER or the GUARANTOR shall not discharge the GUARANTOR's liability here under.

It shall not be necessary for the COMPANY to proceed against the SELLER before proceeding against the GUARANTOR and the Guarantee herein contained shall be enforceable against them not withstanding any security which the company may have obtained or obtained from the SELLER shall at the time when proceedings are taken against the GUARANTOR here under be outstanding or unrealized.

The GUARANTOR hereby declare that it has power to execute this Guarantee and the executant has full powers to do so on its behalf under the proper authority granted to him/them by of the GUARANTOR.

10. Not withstanding anything herein before contained, our liability under this Guarantee is restricted to Rs. ..... (Rupees .... only) and will expire on ..... and unless a claim in writing is presented to us or an action or suit to enforce the claim is filed against us, within six months from the date, all our rights shall be forfeited and we shall be relieved and discharged from all our liabilities thereunder.

IN WITNESS whereof the ..... (Bank) have hereunto set and subscribed their hands the day, month and year first above written.

SIGNED FOR AND ON
BEHALF OF THE BANK

WITNESS:

NAME AND ADDRESS **SIGNATURE**

1.

2.

ANNEXURE - J

REVISED PRICE OFFER IN LIEU OF WITHDRAWAL OF DEVIATIONS/ CLARIFICATIONS OFFERED BY BHEL

Sl. No.	Clause Ref.	Description of Deviation/ Clarification	Whether Increase/ Decrease in Price	Unit Rate (if applicable)	Total Increase/ Decrease	Remarks

NOTE: Total increase or decrease in total price shall be indicated either in percentage or in value (Rs.).

(SIGNATURE OF TENDERER)
WITH STAMP

ANNEXURE - K

LIST OF LABORATORY TEST EQUIPMENTS

SL. NO.	DESCRIPTION OF APPARATUS	CODE REF.
01.	VICATS APPARATUS	IS-5513
02.	LE-CHATELIER'S TEST APPARATUS	IS-5514
03.	MOULD (CEMENT)	IS-10086
04.	CEMENT MORTAR MOULD VIBRATOR	IS-10078
05.	CONCRETE CUBE MOULDS	IS-10086
06.	COMPR. STRENGTH TEST M/C	IS-2505
07.	CONCRETE SLUMP CONE	IS-7320
08.	COARSE AGGR. SIEVES	IS-383
09.	FINE AGGR. SIEVES	IS-383
10.	AGGR. IMPACT TEST M/C	IS-9377
11.	(a) SOIL CORE COMPACTOR	IS-2720
	(b) PROCTOR COMPACTION	IS-29
12.	REBOUND HAMMER	
13.	THEODOLITE	
14.	DUMPY LEVEL WITH STAFF	
15.	OVEN	
16.	PHYSICAL BALANCE	
17.	AIR ENTERTAINMENT METER	ST-1199

(SIGNATURE OF TENDERER)
WITH STAMP

ANNEXURE - L

(On Banks Letter Head)

To:

DGM (Finance)
Transmission Business Group,
2nd floor, Bharat Heavy Electricals Limited,
Integrated office Complex, Lodhi Road,
New Delhi 110 003

Ref & Date :

Sub : Confirmation of Bank Guarantee no. <<BG No. >>

We are a Scheduled Bank other than Co-operative Bank under the RBI Act 1934. The aforesaid BG No. << BG No. >> for Rs. <<BG Amount>>/ (In Words Also) and valid upto <<validity date>> is issued by us on behalf of M/s <<Beneficiary's Name>> in favour of BHARAT HEAVY ELECTRICALS LTD. – TRANSMISSION BUSINESS GROUP.
The format of the Bank Guarantee is strictly as per the format prescribed by M/s BHEL and the stamp paper forming part of the BG are as per the state rules extant.

The signatories to the Bank Guarantee are duly authorised.

Thanking You,

For and On Behalf of
Name of the Bank & Seal

(Please Sign Here)

SECTION-B

GENERAL TERMS AND CONDITIONS

SECTION - B
GENERAL TERMS AND CONDITIONS

B.1.0 The following terms shall have the meaning hereby assigned to them except where the context requires otherwise:-

B.1.1 BHEL (or B.H.E. Ltd.) shall mean Bharat Heavy Electricals Limited, a Company registered under Indian Companies Act 1956, with its Registered Office at BHEL House, Siri Fort, New Delhi-110 049 or its Authorised Officers or its Engineers or other employees authorised to deal with any matters with which these persons are concerned.

B.1.2 "GENERAL MANAGER" shall mean the Officer in Administrative charge of the Contracting Unit of BHEL.

B.1.3 “ENGINEER" OR "ENGINEER-IN-CHARGE" shall mean Engineer deputed by BHEL. The term includes "Deputy General Manager, Construction Manager, Resident Engineer, Assistant Site Engineer of BHEL/at the site as well as the officers in charge at Head Office.

B.1.4 “SITE” shall mean the place or places at which the plants/equipment are to be erected and services are to be performed as per the specification of this tender.

B.1.5 "CLIENTS OF BHEL" or "CUSTOMER/OWNER" shall mean the organization to whom BHEL is responsible for this work.

B.1.6 "CONTRACTOR" shall mean the individual, firm or Company who enters into this Contract with BHEL and shall include their executors, administrators, successors and assigns.

B.1.7 "CONTRACT” or "CONTRACT DOCUMENT” shall mean and include the agreement, the work order, the accepted appendices of rates, Schedules of Quantities, if any, General Terms and Conditions of Contract, Special Conditions of Contract, Instructions to Tenderers, the drawings, the Technical Specifications, the Special Specifications, if any, the tender documents and the Letter of Intent\Accepting Letter issued by BHEL. Any conditions or terms stipulated by the tenderer in the tender documents or subsequent letters shall not form part of the Contract unless specifically accepted in writing by BHEL in the Letter of Intent and incorporated in the Agreement.

B.1.8 "GENERAL CONDITIONS OF CONTRACT" shall mean the "Instructions and Information for Tenderers and General terms and Conditions" pertaining to the work detailed.

B.1.9 TENDER SPECIFICATIONS" shall mean the Special Conditions, Technical Specifications, Appendices, Site Information and drawings pertaining to the work for which the tenderers are required to submit their offer. Individual Specification Numbers will be assigned to each tender specification.

B.1.10 "TENDER DOCUMENTS" shall mean the General Conditions of Contract and Tender Specifications.

B.1.11 "LETTER OF INTENT" shall mean the intimation by a letter/telegram/telex/ fax to the tenderer that the tender has been accepted in accordance with provisions contained in the letter. The responsibility of the contractor commences from the date of issue of this letter and all the terms and conditions of contract are applicable from this date.

B.1.12 "COMPLETION TIME" shall mean the period by date specified in the Letter of Intent/Work Order or date mutually agreed upon for handing over of the erected equipment/plant which are found acceptable by the Engineer being of required standard and conforming to the specifications of the contract.

B.1.13 "ZERO DATE" shall mean the planned commencement date of work under this tender and shall be date of issue of Letter of Intent.

B.1.14 "PLANT" shall mean and connote the entire assembly of the plant and equipment covered by the contract.

B.1.15 "EQUIPMENT" shall mean all equipment, machineries, materials, structural, electricals and other components of the plant covered by the contract.

B.1.16 "TESTS" shall mean and include such test or tests to be carried out by the contractor as are prescribed in the contract or considered necessary by BHEL, in order to ascertain the quality, workmanship, performance and efficiency of the contracted work or part thereof.

B.1.17 "APPROVED" "DIRECTED" or "INSTRUCTED" shall mean approved, directed or instructed by BHEL.

B.1.18 "WORK OR CONTRACT WORK" shall mean and include supply of all categories of labour, specified consumables, tools and tackles required for complete and satisfactory site transportation, handling, stacking, storing, civil and electrical works, erection, testing and commissioning of the equipment to the entire satisfaction of BHEL.

B.1.19 "SINGULAR AND PLURAL" etc. words carrying singular number shall also include plural and vice versa, where the context so requires. Words imparting masculine gender shall be taken to include the feminine gender and words imparting persons shall include any Company or Association or Body or Individuals, whether incorporated or not.

B.1.20 "HEADINGS" The headings in these General Conditions are solely for the purpose of facilitating reference and shall not be deemed to be part thereof or be taken into consideration in the interpretation of construction thereof or the contract.

B.1.21 "MONTH" shall mean calendar month.

B.1.22 "WRITING" shall include any manuscript typewritten or printed statement under the signature or seal as the case may be.

B.2.0 **LAW GOVERNING THE CONTRACT AND COURT JURISDICTION:**

The Contract shall be governed by the Law for the time being enforce in the Republic of India. The Civil Court at Delhi having ordinary Original Civil Jurisdiction shall alone have exclusive jurisdiction in regard to all claims in respect of this contract.

B.3.0 **ISSUE OF NOTICE:**

The contractor shall furnish to the Engineer, the name, designation and address of his authorised agent and all complaints, notices, communications and references shall be deemed to have been duly given to the Contractor, if delivered to the Contractor or his authorised agent and shall be deemed to have been so given in the case of posting on the day on which they would have reached such address in the ordinary course of post or at which they were so delivered or left.

B.4.0 **USE OF LAND:**

No land belonging to BHEL or its customer under temporary possessions of BHEL shall be occupied by the contractor without the written permission of BHEL.

B.5.0 **COMMENCEMENT OF WORK:**

B.5.1 The contractor shall commence the work within fifteen days of Letter of Intent or the time indicated in the Letter of Intent/Work Order and shall proceed with the same with due expedition without delay.

B.5.2 If the successful tenderer fails to commence the work within the stipulated time, BHEL, at its sole discretion will have the right to cancel the Letter of Intent/Contract. His Earnest Money and/or Security Deposit will stand forfeited without any further reference to him without prejudice to any and all of BHEL's other rights and remedies in this regard.

B.5.3 All the works shall be carried out under the direction and to the satisfaction of BHEL/Customer/Owner.

B.5.4 The transported equipment, erected/constructed plant or work performed under the contract, as the case may be, shall be taken over when it has been completed in all respect and/or satisfactorily put into operation at site.

B.6.0 **MEASUREMENT OF WORK AND MODE OF PAYMENT:**

B.6.1 All payments due to the contractor shall be made only by "Account Payee Cheques".

B.6.2 For progress/running bill payments, the contractor shall present detailed measurement sheets in triplcate duly indicating all relevant details based on technical documents, protocols & material test reports and connected drawings for the work done during the calendar month/period under different categories in line with terms of payment & as per Letter of Intent. The basis of arriving at the quantities/weights shall be the relevant documents and drawings released by BHEL. These measurement sheets shall be prepared jointly with Engineers of BHEL and signed by all parties.

B.6.3 The measurement sheets will be checked by the Engineer and quantities & percentage eligible for payment under different groups shall be decided by him. The abstract of quantities and percentage so arrived at based on the terms of payment shall be entered in the Measurement Book & signed by both the parties. Where required counter signature of Customer/Owner shall have to be taken.

B.6.4 Based on the above quantities, contractor shall prepare the bills in the prescribed proforma and work out the financial value. These will be entered in the measurement Book and signed by both the parties. Payment shall be made by BHEL after effecting the recoveries due from the Contractor.

B.6.5 All recoveries due from the contractor for the month/period shall be effected in full from corresponding running bills unless specific approval from Competent Authority is obtained to the Contrary.

B.6.6 Measurement shall be taken jointly by person duly authorised by BHEL, Owner and the Contractor.

B.6.7 The Contractor shall bear the expenditure involved, if any, in taking the measurements & testing of materials to be used in the works. The Contractor shall without extra cost to BHEL, provide all the assistance with appliances and other things necessary for measurement.

B.6.8 If at any time due to any reason whatsoever, it becomes necessary to remeasure the work done, in full or in part, the expenses towards such re-measurement shall be borne by contractor.

B.6.9 Passing of bills covered by such measurement does not amount to acceptance by BHEL of the completion of the work measured. Any left out work has to be completed by the Contractor, as directed by BHEL.

B.6.10 Final measurement bill shall be prepared in the proforma prescribed for the purpose, based on the certificate issued by the Engineer that the entire work as stipulated in the tender specification has been completed in all respects to the entire satisfaction of BHEL.

The contractor shall give unqualified "No claim" and "No Demand" certificates. All the tools and tackles loaned to him should be returned in condition satisfactory to BHEL. The abstract of final quantities and financial values shall also be entered in the Measurement Book and signed by both the parties. The final bill shall be paid after completion of all the defects/deficiencies etc. pointed out by BHEL. The Contractor should submit all the original documents such as material consumption, site order book etc. maintained at site. After payment of final bill, only guarantee obligation percentage value shall remain unpaid, which shall be released in accordance with Clause A.17.7.

B.7.0 **RIGHTS OF BHEL:**

BHEL reserves to itself the following rights in respect of this Contract without entitling the Contractor for any compensation.

B.7.1 To get the work done through another agency at the risk and cost of the Contractor, in the event of poor progress, or the contractor's inability to progress the work for completion as stipulated in the Contract, poor quality of work, persistent disregards of instructions of BHEL, assignment, transfer, subletting of the contracted work without written permission of BHEL, non fulfilment of any contractual obligations etc. and to claim/recover compensation for such losses from the contractor including BHEL's supervision charges and overheads from Security Deposit/other dues.

B.7.2 To withdraw any portion of work &/or to restrict/alter quantum of work as indicated in the contract during the progress of construction and get it done through other agency and/or by departmental labour to suit BHEL's commitment to its customer or in case BHEL decides to advance the date of completion period due to other emergent reasons/BHEL's obligations to its customer.

B.7.3 To terminate the contract after due notice and forfeit Security Deposit and recover the loss sustained in getting the balance work done through other agencies in addition to liquidated damages in the events of :

a) Contractor's continued poor progress.
b) Withdrawal from or abandonment of the work before completion of the work.
c) Corrupt or illegal act of the Contractor.
d) Insolvency of the Contractor
e) Persistent disregard of the instructions of BHEL.
f) Assignment, transfer, subletting of the contract work without BHEL's written permission.
g) Non-fulfilment of any contractual obligations.

B.7.4 To recover any moneys due from the Contractor, from any moneys due to the contractor under this or any other contract or from the Security Deposit.

B.7.5 To recover additional cost incurred in execution of work along with BHEL overhead (i.e. @ 5% of executed value of such work) in case BHEL has

decided to execute the work at risk & cost of the contractor. The work can be executed either directly by BHEL or through another agencies.

.

B.7.6 To terminate the Contract or to restrict the quantum of work and pay only for the portion or work done in case BHEL's contract with its customer is terminated/ altered/deferred/disputed/frustrated for any reasons.

B.7.7 To effect recoveries from any amounts due to the Contractor under this or any other contract or in any other form the moneys which BHEL is forced to pay to anybody due to contractor's failure to fulfil any of his obligations.

B.7.8 To restrict or increase the quantity and nature of work to suit site requirements, since the tender specification is based on preliminary documents and quantities furnished therein are indicative and approximate and the rates quoted shall not be subject to revision.

B.7.9 To deploy BHEL's skilled and unskilled workmen in case of emergency/poor progress/deficiency in skill on the part of the employees of the contractor and to recover the expenditure on account of the same from the moneys due to the contractor.

B.7.10 While every endeavour will be made by BHEL to this end, BHEL can not guarantee uninterrupted work due to conditions beyond its control. The contractor will not be entitled to any compensation/extra payment on this account. No idle labour charges will be payable by BHEL in any case.

B.7.11 In the event of any dispute of technical nature, the decision of BHEL shall be final and binding on the Contractor.

B.8.0 **RESPONSIBILITY OF THE CONTRACTOR IN RESPECT OF LOCAL LAWS, EMPLOYMENT OF WORKERS ETC:**

The following are the responsibilities of the Contractor in respect of observance of local laws, employment of personnel, payment of taxes etc.

B.8.1 As far as possible, unskilled workers shall be engaged from the local areas in which the work is being executed. In case of any necessity is felt by the contractor to bring labourers from out side State, provisions of law governing such immigration by the concerned State are to be followed.

B.8.2 The Contractor at all times during the currency of this contract, shall in all his dealings with the local labour for the time being employed on or in connection with the work, have due regard to all local festivals, religious and other customs.

B.8.3 The contractor shall comply with all State and Central Laws, Statutory Rules, Regulations etc., such as: The payment of wages to, The Minimum Wages Act, The Workmen Compensation Act, The Employees Liability Act, The Industrial Dispute Act, The Employees Provident Fund Act, Employees State Insurance Scheme, The Contract Labour (Regulations and Abolition) Act 1970 and other Acts, Rules & Regulations for labour as may be enacted by the Government during the tenure of the contract and having in force or jurisdiction at site. The Contractor shall give to the local Governing Body, Police and other concerned Authorities all such notice as may be required under law.

B.8.4 The contractor, as required, will obtain independent license under the Contract Labour (Regulations & Abolition) Act 1970 from the concerned authorities based on the certificate (Form-V) issued by the Principal Employer/Customer.

B.8.5 The Contractor shall pay all taxes, fees, license charges, deposits, duties, tolls, royalty, commissions or other charges which may be Leviable on account of any of his operations connected with this contract. The Contractor is responsible to furnish documentary evidence towards GST Registration of the State wherein the site is located and any other documents as per GST Act which may be be required from time to time by BHEL.The contractor should have to get the contract registered immediately after award of works as per rules and regulations of the State Government. The contractor shall file regular return as per statute of the State/Centre and should provide all information to BHEL as required for the assessment of the project concerned. In case BHEL is forced to make any of such payments, BHEL shall recover the same from the contractor either from moneys due to him or otherwise as deemed fit.

B.8.6 Arrangements for the periodical visits of inspection agencies such as Electrical Inspector etc. to site, inspection certificates etc. will have to be made by the contractor at his cost. The contractor will also meet all expenses in connection with his welder's qualification/ re-qualification tests etc.

B.8.7 The contractor shall be responsible for provision of health and sanitary arrangements {more particularly described in the Contract Labour (Regulation & Abolition) Act 1970} & safety precautions as may be required for safe and satisfactory execution of the contract.

B.8.8 The Contractor shall be responsible for proper accommodation including adequate medical facilities for the personnel employed by him.

B.8.9 The Contractor shall be responsible for the proper behaviour and observance of all regulations by the staff employed by him.

B.8.10 The contractor shall ensure that no damage is caused to any person/property of other parties working at site. If any such damage is caused, it shall be the responsibility of the contractor to make good the losses or compensate them.

B.8.11 All the properties/equipment/components of BHEL/its customer loaned with or without deposit, to the contractor, shall remain the properties of BHEL/its customer. The contractor shall use such properties for the purpose of execution of this contract. All such properties/equipment/components shall be taken in to good condition unless notified to the contrary by the contractor within 48 Hrs. The Contractor shall return them in good conditions as and when required by BHEL/ its customer. In case of non-return, loss, damage repairs etc., the cost thereof, as may be fixed by the Engineer, will be recovered from the contractor.

B.8.12 It shall not be obligatory on the part of BHEL to supply any tools and tackles or materials other than those specifically agreed to be given by BHEL. However, depending upon availability/possibility, BHEL/its customer's equipment and other materials may be made available to the contractor on payment of the hire charges as fixed by them, subject to the conditions laid down by BHEL/its Customer from time to time. Unless paid in advance, such hire and other charges shall be recovered from out of dues to the contractor or Security Deposit in one instalment. In case, BHEL provide the material like steel etc. for Subcontractors / Suppliers, handling charges @ 15% per annum or 1.25% per month or part thereof will be recovered from the contractor in addition to the actual procurement cost of material. The period for imposing handling charges is to be reckoned from the date of making payment/LR for lifting material to / by Subcontractor from authorized source, whichever is earlier to

a) The date of LR for dispatch of finished product by the supplier / fabricator.
b) Till date of consumption by the contractor as recorded in the MB.

B.8.13 The Contractor shall fully indemnify and keep indemnified BHEL/its customer against all claims of whatsoever nature arising during the course of execution of this contract.

B.8.14 In case the contractor is required to undertake any work outside the scope of this contract, the amount payable shall be as may be mutually agreed upon.

B.8.15 Any delay in completion of works or non-achievement of periodical targets, due to reasons attributable to the contractor, will have to be compensated by the contractor either by increased manpower and resources or by working extra hours or more than one shift at no extra cost to BHEL.

B.8.16 The contractor shall execute the work under the conditions usual to such construction work and in conjunction with numerous other operations at site and proceed in a manner that shall help in the progress of work at site as a whole.

B.8.17 The contractor will be directly responsible for payment of wages to his workmen. A pay roll sheet giving details of all payments made to the workmen duly signed by the contractor's representative should be furnished to BHEL, with each running account bill.

B.8.18 In case of any class of work for which there is no specification laid down in the contract, such work shall be carried out in accordance with the instructions and requirements of the Engineer.

B.8.19 No levy, payment or charges made or imposed shall be impeached by reason of any clerical error or by reason of any mistake in the amount levied, demanded or charged.

B.8.20 No idle labour charges will be admissible in the event of any stoppage of work resulting in the contractor's workmen being rendered idle due to any reason any time.

B.8.21 The contractor shall take all reasonable care to protect the materials and the work till such time the place/equipment has been taken over by BHEL/its customer.

B.8.22 The contractor shall not stop work or abandon the site for whatsoever reason or dispute, excepting for force majeure conditions. All problems/disputes shall be separately discussed and settled without affecting the progress of work. Stoppage or abandonment of work, other than under force majeure conditions, shall be treated as breach of work of contract and dealt with accordingly.

B.8.23 The contractor shall keep the area of work clean and shall remove debris etc. while executing day-to-day work. Upon completion of work, the contractor shall remove from the vicinity of works, all scrap, packing materials, rubbish, unused and other materials and deposit them in places specified by the Engineer. The contractor will also demolish all the hutments, sheds, offices etc. constructed & used by him and shall clean the debris. In the event of his failure to do so, the same will be arranged to be done by the Engineer and the expenses recovered from the contractor.

B.8.24 The contractor shall execute the work in the most substantial and workman like manner in the stipulated time. Accuracy of work and timely execution shall be the essence of this contract. The contractor shall be responsible to ensure that the quality, assembly and workmanship conform to the dimensions and clearance given in the drawings and/or as per instructions of the Engineers.

B.8.25 The contractor shall furnish progress reports on work at regular intervals as required by the Engineer.

B.9.0 RESPONSIBILITIES OF CONTRACTOR IN RESPECT OF SAFETY OF MEN, EQUIPMENT, MATERIAL AND ENVIRONMENT:

B.9.1 All safety rules and codes applied by BHEL/its customer at site shall be observed by the contractor and his workmen without exception. The contractor shall be responsible for the safety of the equipment/materials and work to be performed by him and shall maintain all lights, fencing guards, signs etc. or other protections necessary for the purpose. Contractor shall also take such additional precautions as may be indicated from time to time by the Engineer, with a view to prevent pilferage, accidents, fire hazards etc. and suitable number of clerical staff, watch and ward, store keepers to take care of equipment, materials and construction tools & tackles shall be posted at site by the contractor till the completion of the work under this con tract. The contractor shall arrange for such safety devices as are necessary for this type of work & carry out the requisite site tests of handling equipment, lifting tools, tackles etc. as per usual standards and practices.

B.9.2 The contractor shall provide to its work force & ensure the use of required personal protective equipment as found necessary & as directed by the authorised BHEL officials.

i) Safety helmets conforming to IS-2925 : 1984.
ii) Safety belts conforming to IS-3521 : 1983.
iii) Safety shoes conforming to IS-1989 : 1978.

iv) Eye and face protection devices conforming to IS-8520 : 1977 and IS-8940 : 1978.

v) Hand and body protection devices conforming to IS-2573 : 1975, IS-6994 : 1973, IS-8807 : 1978 and IS-8519 : 1977.

B.9.3 All tools, tackles, fitting appliances, material handling equipment, scaffolds, cradles, safety nets, ladders, equipment, etc. used by the contractor shall be of safe design and construction and maintained in good condition. However BHEL officials shall have the right to ban use of any of them or get them tested at their discretion. All electrical equipment, connections & wiring for construction power, its distribution & use shall conform to the relevant requirements of Indian Electricity Act and Rules. Only electricians licensed by the appropriate statutory authority shall be employed by the contractor to carry out electrical works.

B.9.4 All electrical appliances including portable electric tools used by contractor shall have safe plugging system to source of power and be appropriately earthed.

B.9.5 The contractor shall not use any hand lamp energised by electric power with supply voltage of more than 240 volts. For work in confined spaces, lighting shall be arranged with power source of not more than 240 volts.

B.9.6 Where it becomes necessary to provide and/or store petroleum products, explosives, chemicals and liquid or gaseous fuel or any other substance that may cause fire or explosion, the contractor shall be responsible for carrying out such provision and/or storage in accordance with the rules and regulations laid down in the relevant Government Acts, such as Petroleum Act, Explosive Act, Petroleum & Carbides of Calcium Manual of the Chief Controller of Explosives, Government of India etc. Prior approval of the authorised BHEL official at the site shall also be taken by the contractor in all such matters.

B.9.7 The contractor shall arrange at his cost appropriate illumination as required at all work spots for safe working, when natural day light may not be adequate for clear visibility.

B.9.8 In case of a fatal or disabling injury/accident to any person at construction sites pertaining to this work, the victim and/or his/her dependents shall be compensated by the contractor as per statutory requirements. However, if considered necessary, BHEL shall have the right to impose appropriate financial penalty on the contractor & recover the same from payments due to the contractor for suitably compensating the victim and/or his/her dependents.

Before imposing any such penalty, appropriate enquiry shall be held by BHEL giving opportunity to the contractor to present his case.

B.9.9 In case of any damage to property due to lapse by the contractor, BHEL shall have the right to recover the cost of such damages from the payments due to the contractor.

B.9.10 In case of any delay in the completion of a job due to mishaps attributable to lapses by the contractor, BHEL shall have the right to recover cost of such delay from the payments due to the contractor, after notifying the contractor suitably and giving him opportunity to present his case.

B.9.11 If contractor fails to improve the standards of safety in its operation to the satisfaction of BHEL after being given reasonable opportunity to do so and/or if the contractor fails to take appropriate safety precautions or to provide necessary safety devices and equipment or to carry out instructions regarding safety issued by the authorised BHEL official, BHEL shall have the right to take the corrective steps at the risk and cost of the contractor after giving appropriate notice indicating the steps that would be taken by BHEL.

B.9.12 The contractor shall submit report of all accidents, fires, property damaged and dangerous occurrences connected with his area of work or caused due to his action/inaction, to the authorised BHEL official immediately after such occurrence, but in any case not later than 12 hours of the occurrence.

B.9.13 During the course of construction, alteration or repairs scrap lumbers with protruding nails, sharp edges etc. and all other debris including combustibles scrap shall be kept cleared from working areas, passage ways and stairs in and around site.

B.9.14 Cylinders shall be moved by tilting and rolling them on their bottom edges. They shall not be intentionally/negligently dropped, struck or permitted to strike each other violently. When cylinders are transported by powered vehicles, they shall be secured in a vertical position.

B.9.15 The contractor shall be responsible for the safe storage of his radioactive sources if same have been permitted to use.

B.9.16 All contractor's supervisory personnel and sufficient number of workmen shall be trained for fire fighting and first aid duties and shall be assigned specific duties. Enough number of such trained personnel must be available during the tenure of the contract.

B.9.17 Contractor shall provide enough fire protecting equipment of the types and numbers at his office, stores, construction/erection site, other temporary structures, labour colony area etc. Access to such fire protection equipment shall be easy and kept open at all times. Compliance of the above requirement under fire protection system at project site shall in no way relieve the contractor of any of his responsibilities and liabilities to fire accident occurring. In the event of fire safety measures being not to BHEL's satisfaction, BHEL shall have option to provide the same and recover the cost plus incidentals from contractor's bills and/or impose penalty as deemed fit by the Engineer.

B.9.18 Before commencing the work, the contractor shall appoint/nominate a responsible officer to supervise implementation of all safety measures and liaison with BHEL Engineer at site.

B.9.19 If safety record of the contractor in execution of the awarded job is to the satisfaction of Safety Department of BHEL, issue of an appropriate certificate to recognise the safety performance of the contractor may be considered by BHEL after completion of the job.

B.10.0 **CONSEQUENCES OF CANCELLATION:**

B.10.1 Whenever BHEL exercises its authority to terminate the contract / withdraw a portion of work, the work may be got completed by any other means at the contractor's risk and cost provided that in the event of the cost of completion (as certified by the Engineer which shall be final and binding on the contractor) being less than the contract value, the advantage shall accrue to BHEL. If the cost of completion exceeds the money due to the Contractor under the Contract, the Contractor shall either pay the excess amount demanded by BHEL or the same shall be recovered from the contractor. This will be in addition to the forfeiture of Security Deposit & recovery of liquidated damages as per relevant clauses.

B.10.2 In case BHEL completes the work under the provisions of this clause, the cost of such completion to be taken into account for determining the excess cost to be charged to the contractor shall consist of cost of materials purchased and/or labour provided by BHEL with an addition of such percentage to cover supervision and establishment charges as may be decided by BHEL.

B.11.0 **INSURANCE:**

B.11.1 BHEL/its customer shall arrange for insuring the project materials/properties of BHEL/its customer covering the risks during storage, construction, erection and commissioning.

B.11.2 It shall be the sole responsibility of the Contractor to insure his workmen against risks of accident and injury while at work as required by the relevant rules and to pay compensation, if any, to them as per Workmen's Compensation Act. The Contractor shall also insure his staff against accidents. The work will be carried out in a protected area and all the rules and regulations of BHEL/its client in the project area which are in force from time to time will have to be followed by the contractor.

B.11.3 If due to negligence and/or non-observance of safety and other precautions any accident/injury occurs to any other person/public, the contractor shall pay necessary compensation and other expenses, if so decided by the appropriate authority.

B.11.4 It shall be the responsibility of the contractor to provide security and insurance claim related information/reports etc. for the equipment/material belonging to BHEL/its customer and handed over to the contractor for transportation/erection/construction till these are taken over by BHEL after erection/construction or are returned to BHEL/its customer's store.

B.11.5 If due to Contractor's carelessness, negligence, non-observance of safety precautions, improper security arrangements or due to non-compliance of paper work needed for lodging insurance claim, damage to BHEL/its Customer's property and/or personnel should occur, and if BHEL is unable to recover its claim from the Insurance Company, the deficit will be recovered from the Contractor.

B.12.0 **STRIKES & LOCKOUTS:**

B.12.1 The Contractor will be solely responsible for all disputes & other issues connected with his workmen. In the event of the contractor's workmen resorting to strike or the contractor resorting to lockout & if the strike or the lockout so declared is not settled within a period of one month, BHEL shall have the right to get the work executed by employing its own men or through other agencies or both. The cost incurred by BHEL in this regard shall be recovered from the Contractor.

B.12.2 For any purpose whatsoever, the employees of the contractor shall not be deemed to be in the employment of BHEL/its Customer.

B.13.0 **FORCE MAJEURE:**

B.13.1 The following shall amount to force majeure conditions:-

Acts of God, Act of any Government, war, Sabotage, riots, civil Commotion, Police Action, Revolution, Flood, Fire Cyclone, Earthquake, Epidemic & other similar causes over which the contractor has no control.

B.13.2 If the contractor suffers delay in the due execution of the contract, due to delays caused by force majeure conditions, as defined above, the agreed time of completion of the work covered by this contract may be extended by a reasonable period of time in consultation and after agreement of BHEL's clients/owner, provided that on the occurrence of any such contingency, the Contractor immediately reports to BHEL in writing the causes of delay. The Contractor shall not be eligible for any compensation on this account.

B.14.0 **GUARANTEE:**

The guarantee and defect liability period shall be 12 months from the date of commissioning of switchyard or handing over of entire civil works, whichever is later.

B.15.0 **ARBITRATION:**

(i) Except as provide elsewhere in this Contract, in case amicable settlement is not reached between the Parties, in respect of any dispute or difference; arising out of the formation, breach, termination, validity or execution of the contract; or, the respective rights and liabilities of the Parties; or, in relation to interpretation of any provision of the contract; or, in relation to interpretation of any provision of the Contract; or, in any manner touching upon the contract, then, either Party may, by a notice in writing to the other Party refer such dispute or difference to the sole arbitration of an arbitrator appointed by Head of the BHEL Unit/Region/Division issuing the Contract.

The Arbitrator shall pass a reasoned award and the award of the Arbitrator shall be final and binding upon the Parties.

Subject as aforesaid, the provisions of Arbitration and Conciliation Act 1996 (India) or statutory modifications or re-enactments thereof and the rules made thereunder and for the time being in force shall apply to the arbitration proceedings under this clause. The seat of arbitration shall be New Delhi.

The cost of arbitration shall be borne as per the award of the Arbitrator.

Subject to the arbitration in terms of clause L above, the court at New Delhi shall have exclusive jurisdiction over nay matter arising out of or in connection with this Contract.

Notwithstanding the existence or any dispute or differences and/or reference for the arbitration, the Contractor shall proceed with and continue without hindrance the performance of its obligations under this contract with due diligence and expedition in a professional manner except where the contract has been terminated by either Party in terms of this contract.

(iI) In the event of dispute or difference relating to the interpretation and application of the provisions of commercial contract(s) between Central Public Sector Enterprises (CPSEs)/ Port Trusts inter se and also between CPSEs and Government Departments/ Organizations (excluding disputes concerning Railways, Income Tax, Customs & Excise Departments), such dispute or difference shall be taken up by either party for resolution through AMRCD as mentioned in DPE OM No.4(1)/2013-DPE9GM)/ FTS-1835 dated 22.05.2018.

SECTION-C

SPECIAL CONDITIONS OF CONTRACT

SECTION - C-1

SPECIAL CONDITIONS OF THE CONTRACT

C-1.0 **INSTRUCTIONS TO TENDERERS:**

C-1.1 The tenderers are advised to physically visit the site and fully acquaint themselves with site conditions, transportation routes, various distances etc. No claim will be entertained by BHEL on ground of lack of knowledge and the contractor's rates shall be deemed to have taken this into account.

C-1.2 All temporary structures, hutments etc. set up by the contractor or their workmen during execution shall be removed prior to submission of final bill by the contractor.

C-1.3 The contractor in the event of this work awarded to him, shall establish an office at site and keep posted an authorised, responsible officer with a valid power of attorney for the purpose of the contract. Any order or instructions of the "Engineer" or his duly authorised representatives, communicated to the contractor's representative at site will be deemed to have been communicated to the contractor at his official address.

C-1.4 The contractor is required to commence the work within two weeks from the date of issue of Letter of Intent or as indicated in the LOI/Work Order, failing which the LOI/contract is liable to be cancelled and EMD/SD shall be forfeited.

C-1.5 BHEL reserves the right to split up the work and to award to more than one contractor or award only a part of the work to a contractor.

C-2.0 **PERFORMANCE BOND:**

The contractor shall submit Bank Guarantee of an approved Nationalised Bank as per BHEL proforma for an amount equal to 2.5% of the contract value as performance bond to get his balance 2.5% payment released at the discretion of the engineer as per the general conditions of contract. The performance Bank Guarantee shall remain valid up to successful completion of performance and guarantee tests of the station and taking over of the plant by BHEL/client of BHEL. Not withstanding the provisions of any other clause(s) of General Conditions of Contract, the contractor shall continue

to be responsible to execute all such works of repair, rectification and making good of defects, imperfections of other faults as may be required of the contractor in writing by the Engineer for the period as stated above. The proforma for submission of the BG shall be as per Annexure I.

Above clause no. C-2.0 shall be read in conjunction with clause no. C-29.5.2.

C-3.0 **SITE DRAINAGE:**

All water which may accumulate on the site during the progress of the works, or in trenches and excavations, including monsoon period shall be removed by the contractor from the site to the satisfaction of the Engineer at the contractor's expense.

C-4.0 **EXECUTION OF THE WORK:**

C-4.1 The work will be executed in a workman like manner and to the entire satisfaction of the Engineer and as per technical specifications of this tender, IS Codes, CPWD specifications etc. as applicable. In case of conflict regarding interpretations the decision of the Engineer shall be final and binding.

C-4.2 The Engineer will communicate or confirm his instructions to the contractor in respect of the execution of the work in a "Site Order Book" maintained at his office and confirm issue of such instructions by signing the relevant entries in this book. Such entries will rank as order or notices in writing within the intent and meaning of these conditions.

C-5.0 **INSPECTION AND STAGE APPROVAL OF THE WORK:**

C-5.1 BHEL/BHEL's Client or the owner or his duly authorised representative shall have at all reasonable times access to the contractor's premises of works and shall have the power to inspect drawings or any portion of the work, examine the materials and workmanship and shall have the authority to reject any work. This would be implemented through joint inspection by the representatives of the owner and BHEL and in the form the joint protocol without any extra claim of time and amount.

C-5.2 All work embracing more than one process shall be subject to examination and approval at each stage thereof and the contractor shall give due notice in writing to the Engineer when each stage is ready. In default of such notice being received, Engineer shall be entitled to approve the quality and extent thereof at any time he may choose and in the event of any dispute, the decision of the Engineer thereon shall be final and conclusive.

C-6.0 **COMPLETION OF WORK:**

C-6.1 The works shall be completed to the entire satisfaction of the Engineer and in accordance with the completion schedule as specified & agreed in the contract, and all unused stores and materials, tools, plant and equipment, temporary buildings and things shall be removed and the site work cleared of rubbish and all waste materials and delivered up clean and tidy to the satisfaction of the Engineer at the contractor's expenses.

C-6.2 BHEL shall have power to take over from the contractor from time to time such sections of the work as have been completed to the satisfaction of the Engineer. Such works however shall not be treated as have been completed until the entire works are executed to the satisfaction of the Engineer. The Guarantee period shall commence only after handing over the entire works.

C-7.0 **UNCOVERING AND ADJUSTMENT OF ERRORS:**

The contractor shall uncover any part of the works and/or make openings in or through the same as the Engineer may from time to time direct for his verification and shall reinstate and make good such part to the satisfaction of the Engineer. If any such part has been covered up or put out of view after being approved by the Engineer and is subsequently found on uncovering to have been executed in accordance with the contract, the expenses of uncovering and/or making opening in or through, reinstating and making good the same shall be borne by BHEL. In any other case all such expenses shall be borne by the contractor.

C-8.0 **DISCREPANCIES AND ADJUSTMENT OF ERRORS:**

C-8.1 The several documents forming the contract are to be taken as mutually explanatory of one another, detailed drawings being followed in preference to small scale drawings & figures dimensions in preference to scale & special conditions in preference to general conditions.

C-8.2 In case of discrepancies between schedule of quantities, the specification and/or the drawings the following order of preference shall be observed :

a) Description in Schedule of Quantities.
b) Special Conditions.
c) Drawings.
d) Technical Specifications.
e) General Conditions of Contract.

C-8.3 If there are varying or conflicting provisions made in any one document forming part of the contract, the Engineer shall be the deciding authority with regard to the document.

C-8.4 Any error in the description, quantity in schedule of quantities or any omission there from shall not vitiate the contract or release the contractor from the execution of the whole or any part of the works comprised therein according to the drawings and specifications or from any of his obligations under the contract.

C-8.5 If on check there are found to be differences between the rates given by the contractor in words and figures or in the amount worked out by him in the schedule of quantities and general summary, the same shall be adjusted in accordance with the following rules :

a) In the event of discrepancies between description in words and figures quoted by tenderer, the description in words shall prevail.

b) In event of an error occurring in the amount column of schedule of quantities as a result of wrong extension of the unit rate and the quantity, the unit rate shall be regarded as firm and extension shall be amended on the basis of the rates.

c) All errors in totalling in the amount column and in carrying forward totals shall be corrected.

d) The totals of sections of bill of quantities amended shall be carried over to the general summary and the tendered sum amended accordingly. The tendered sum so altered shall, for the purpose of tender, be substituted for the sum originally tendered and considered for acceptance instead of the original sum quoted by the tenderer. Any rounding of quantities or in sections of bill of quantities or in general summary, by the tenderer, shall be ignored.

C-8.6 If neither drawings nor specifications contain any mention of minor details of construction which in the opinion of the Engineer, whose decision shall be final and conclusive, are reasonable and obviously and fairly intended for satisfactory completion of work, such details shall be provided by the contractor without any extra cost, as if they were specially mentioned and shall be deemed to be included in the contract.

C-9.0 **DEVIATIONS:**

C-9.1 The contractor shall not make any alternation in, addition to or omission from the work as described in the tender documents except in pursuance of the written instructions of the Engineer. No such deviation from the work described in the tender documents shall be valid unless the same has been specially confirmed and accepted by the Engineer in writing and incorporated in the contract.

C-9.2 The engineer may deviate, either by way of addition or deletion, from the work so described, provided that the contract sum be not thereby varied on the whole by more than the percentage set out in the tender documents. The value of all additions and deletions shall be added to or deleted from the contract sum.

C-9.3 Any objections by the contractor to any matter concerning the order shall be notified by him in writing to the Engineer within 7 (seven) days from the date of such order, but under no circumstances shall the work be stopped (unless so ordered by the Engineer) owing to differences or controversy that may arise from such an objection. In the absence of such a notification of objection by the contractor, he will be deemed to have accepted the order and conditions stated therein.

C-10.0 **VALUATION OF DEVIATIONS:**

C-10.1 If the rates for the additional, altered or substituted work are specified in the contract for the work either in the same section or in the other section of the BOQ of the same work, the contractor is bound to carryout the additional, altered or substituted work at the same rates as are specified in the contract for the work.

C-10.2 For item which are required for successful completion of work but not covered in the BOQ:- if items are available in DSR -2016, then valuation shall be done at DSR rate (DSR 2016) along with applicable % as per contract and same shall be binding to the bidder.

C10.2.1 EXTRA/ ADDITIONAL ITEMS OF WORK

If any extra or additional items, which are not incorporated in the BOQ schedule, have to be executed by the contractor, the rate of such extra or additional work shall be as per the following:

C10.2.2 If the items are not covered under price schedule, the rates have to be agreed upon mainly on the basis of prevailing market rates for which all documentary evidences as required by BHEL shall have to be produced by the contractor. Decision of BHEL in such cases shall be final and binding on the contractor.

C-10.2.3 Under no circumstances the contractor shall suspend the work on the plea of non- settlement of rates falling under the clause or claim any compensation on that account.

C-10.2.4 BHEL reserves the right to carry out such extra/additional items of work through any other contractor or in such a manner as he considered advisable.

C-10.2.5 The contractor, on receipt of drawing from BHEL, shall inform BHEL (within 15 days) the rate / rates of item/items for carrying out the extra/additional item of work. This shall be supported by analysis of rates including prevailing market rates.

C--10.2.6 If the rate for additional, altered or substituted work is available in DSR 2016 then the rate shall be settled as per clause no. C-10.2.

C-10.3 Variation in quantity of work: - There may be variations in the individual item in the schedule during actual execution of the work. However, tendered unit rates shall remain firm up to a variation of ± 30% of the total value of the contract irrespective of variations in the quantity of individual items.

C-11. RECORD AND MEASUREMENT:

C-11.1 All items having a financial value shall be entered in BHEL measurement book so that a complete record is obtained of all works performed under the contract.

C-11.2 Work which fails to be measured in details shall be measured physically without reference to any local custom that may obtain excepting where it may otherwise be directed in the tender documents. The measurements shall be taken jointly by any person duly authorised on the part of BHEL and the contractor.

C-11.3 The contractor shall, without extra charge, provide assistance with appliances and other things necessary for measurement and shall bear all the cost of measurement of his work.

C-11.4 Measurement shall be entered in BHEL measurement book and signed and dated by both parties at the site on completion of measurement. If the contractor objects to any of the measurements recorded on behalf of BHEL, a note to that effect will be made in BHEL measurement book or against the item or items objected to and such note shall be signed and dated by both the parties engaged in taking the measurement.

C-11.5 If, as result of such objection, it becomes necessary to remeasure the work wholly or in part, the expense of such measurement shall be borne by the contractor.

C-11.6 If the contractor's representative fails to attend when required, the engineer shall have power to proceed by himself to take measurements & in that case these measurements shall be accepted by the contractor as final.

C-11.7 The contractor shall, once in every month, submit to the Engineer details of his claims for the work done by him up to and including the previous month, which are not covered by this contract agreement in any of the following respects:

a) Deviations from items and specifications provided in the contract documents.
b) Extra item/new items of work.
c) Quantities in excess of those provided in the contract schedule.
d) Items in respect of which rates have not been settled.

C-11.8 Contractor should, in addition, furnish a clear certificate to the effect that the claims submitted by him as aforesaid cover all his claims and that no further claims shall be raised by him in respect of the work done up to and including the period under report.

C-12.0 **CONTRACTOR'S SUPERVISION:**

C-12.1 The contractor shall either himself supervise the execution of the contract or shall appoint a competent agent approved by the Engineer to act in his stead.

C-12.2 The contractor, shall employ an engineer/agent having qualification in Civil Engineering from a recognised Institute for any work with a contract value exceeding Rs. Two Lakhs.

C-12.3 If the contractor fails to appoint a suitable engineer/agent as aforesaid, the Engineer shall have full powers to suspend the execution of work & stop payment of any amount that may have become due until such date as a

suitable engineer/agent is appointed and the contractor shall be held responsible for the delay caused to the work & no extension of time on this account shall be given to him.

C-12.4 Orders given to the contractor's engineer/agent shall be considered to have the same force as they had been given to the contractor himself.

C-12.5 The contractor or his agent shall be in attendance at the site during all working hours and shall superintend the execution of work with such additional assistance in each trade as the Engineer may consider necessary.

C-12.6 The contractor or his agent shall attend, when required and without making claim for doing so, either the office of the Engineer or work site to receive instructions.

C-12.7 The Engineer shall have full powers, and without assigning any reason, to require the contractor immediately to cease to employ in connection with this contract any agent, servant or employee whose continued employment, in his opinion, undesirable.

C-13.0 **LABOUR AND SUPERVISION STAFF:**

C-13.1 The contractor shall engage experienced supervisory staff and specially skilled labour for work under this contract.

C-13.2 The contractor shall have to make his own arrangement for maintenance of his T and P so as to minimise the down time.

C-13.3 The supervisory staff employed by the contractor shall ensure proper out-turn of the work and discipline on the part of the labour put on the job. The contractor in general should see that the works are carried out in a safe and proper manner and in coordination with the staff employed directly by BHEL or other contractors of BHEL or its client.

C-13.4 It shall be the responsibility of the contractor to ensure safe working, taking due precautions to avoid any accident and damage to other equipment and personnel. He shall be liable for all accidents, damages etc. to personnel and equipment etc. during the execution of the work.

C-13.5 The work shall be executed under the usual conditions like rain, insufficient space, improper approach roads etc. affecting major construction work and in conjunction with numerous other operations at site. The contractor and his personnel shall cooperate with the others and proceed in a manner that shall

not delay or hinder the progress of work as a whole nor claim any compensation on such grounds.

C-13.6 The contractor will arrange necessary accommodation for his supervisory and workmen at his own cost. However, BHEL will approach customer for accommodation for contractor's staff and labour on chargeable basis, if possible.

C-14.0 **PLANT AND EQUIPMENT AT SITE:**

C-14.1 The contractor shall, at his own expenses, supply all tools, plant and equipment (hereinafter referred as T and P), testing instruments and consumables required for the execution of the contract.

C-14.2 All tools, plant & equipment brought to the site shall become the property of the BHEL & shall not be removed from the site without the written approval of the Engineer. When the work is finally completed or the contract is terminated for reasons other than the default of the contractor, he shall forthwith remove from the site all tools, plant, equipment etc. (other than those as may have been provided by BHEL) and upon such removal, the same shall revert in & become the property of the contractor.

C-15.0 **COMPLIANCE TO REGULATIONS AND BY LAWS:**

C-15.1 The contractor shall confirm to the provisions at any statute relating to the work and regulations and bylaws of any local authority and of any water and lighting companies or undertaking with whose system the work is proposed to be connected. He shall before making any variation from the drawings or the specifications that may be necessitated for such connections give the Engineer, notice specifying the variation proposed to be made & the reasons thereof & shall not carry out any such variation until he has received instructions from the Engineer in respect thereof. The contractor shall be bound to give all notices required by statute, regulations or by laws as aforesaid and to pay all fees and taxes payable to any authority in respect thereof.

C-16.0 **MATERIALS OBTAINED FROM EXCAVATION:**

C-16.1 Materials of any kind obtained from excavation on the site shall remain in property of BHEL & shall be disposed of as the Engineer may direct, at no extra cost.

C-17.0 **TREASURE, TROVE, FOSSILS, ETC:**

All fossils, coins, articles of value or antiquity and structures and other remains or things of geological or archaeological interest discovered on the site shall be the absolute property of BHEL and the contractor shall take reasonable precautions to prevent his workmen or any other person from removing or damaging any such article or thing, shall immediately upon discovery thereof and before removal acquaint the Engineer with such discovery and carry out the Engineer's directions as to the disposal of the same.

C-18.0 **PROTECTION AND SECURITY:**

The contractor shall provide and maintain at his own expenses all lights, guards, fencing and Watch & Ward when and where necessary or required by Engineer for the protection and security of the works or for the safety and convenience of those employed on the works or the public.

C-19.0 **SITE OFFICE AND STORES:**

C-19.1 BHEL shall provide to the restricted extent, open space as made available to BHEL by its customer in as is where is basis for site office and stores, free of charge.

C-19.2 The contractor shall provide, construct and maintain at his own expenses the site office, material testing laboratory, stores & shall make his own arrangements for water, sanitation, access roads, electrification and cleanliness required for proper and efficient execution of work. The planning, setting and construction of these buildings shall have the approval of the Engineer & the contractor shall keep them tidy, clean and in sanitary condition to the satisfaction of Engineer.

C-19.3 After completion of work the contractor shall promptly dismantle, the distribution and other facilities that may have been erected, at his own cost and clear the area to the satisfaction of the Engineer and hand over the same to the Engineer.

C-20.0 **POWER & WATER :-**

C-20.1 The Construction Power shall be provided at one point on chargeable basis and recovery shall be made on actuals at the rate prevailing at the time of drawl of

power from RA bills as per Customer/BHEL norms. The contractor shall have to make their own arrangements, at their cost for distribution to various locations for their works including proper switch/fuse units, distribution boards, cables, poles etc. to ensure safety of men and equipment. Where required, the contractor shall employ diesel operative equipment in addition to electric operated ones to ensure timely completion of work.

In case BHEL is not able to supply power, contractor has to make his own arrangement and take a separate connection for all construction works.

BHEL shall not be responsible for any inconvenience caused due to any failure of lighting and power supply and no compensation for delay in works can be claimed by the contractor due to such non-supply on the grounds of idle labour, machinery or any other grounds. The contractor should ensure that the work in critical areas is not held up in the event of lighting and power breakdown and for the same he should have some stand by arrangement at his cost. In the event of breakdown in the electric supply, if the progress of work is hampered, it will be the responsibility of the contractor to step up the progress after restoration of electric supply so that over all progress of work is not affected. The contractor shall make proper arrangement of illumination at work place while working in late hours or in darkness.

C-20.2 Unless stated otherwise in the scope, The contractor shall make his own adequate arrangement for procuring clear water to be used in works at his own cost. However, water if available may be supplied to the contractor at one point on chargeable basis and recovery shall be made on actuals at the rate prevailing at the time of drawl of water from RA bills as per Customer/BHEL norms.

C-21.0 **TEMPORARY WORKSHOP, STORES, CONSUMABLES ETC:**

The contractor shall during the progress of work, provide, erect and maintain at his own expenses all necessary temporary workshops, stores, consumables, offices etc. required for the proper and efficient execution of the work. The planning, setting & erection of these buildings shall have the approval of the Engineer and the contractor shall at all time keep them tidy & in a clean and sanitary condition on to the entire satisfaction of the Engineer.

C-22.0 **MATERIALS:**

C-22.1 The contractor shall at his own expenses, provide all materials required for the work. All materials to be provided by the contractor shall be in conformity with the specifications laid down in the contract & the contractor shall, if

requested by the Engineer, furnish proof to the satisfaction of the Engineer that the materials so comply.

C-22.2 The contractor shall, at his own expenses and without delay, supply to the Engineer samples of materials proposed to be used in the works. The Engineer shall within seven days of supply of samples or within such further period as he may require, intimate to the contractor in writing, whether samples are approved by him or not. If samples are not approved, the contractor shall forthwith arrange to supply to the Engineer for his approval fresh samples complying with the specifications laid down in the contract. Any delay in approval of samples (original or fresh ones) shall not make the contractor eligible for any compensation.

C-22.3 The Engineer shall have full powers to require removal of any or all of the materials brought to site by the contractor which are not in accordance with the contract specifications or do not conform in character or quality to samples approved by him. In case of default on the part of contractor in removing rejected materials, the Engineer shall be at liberty of have them removed by other means. The Engineer shall have full powers to procure other proper materials to be substituted for rejected materials and in the event of the contractor refusing to comply, he may cause the same to be supplied by other means. All costs, which may attend upon such removal and/or substitution shall be borne by the contractor**.** In such cases, handling charges @ 15% per annum or 1.25% per month or part thereof will be recovered from the contractor in addition to the actual procurement cost of material. The period for imposing handling charges is to be reckoned from the date of making payment / LR for lifting material to / by Subcontractor from authorized source, whichever is earlier to

a) The date of LR for dispatch of finished product by the supplier / fabricator.
b) Till date of consumption by the contractor as recorded in the MB.

C-22.4 The contractor shall indemnify BHEL, its representative or employees against any action, claim or proceeding relating to infringement or use of any patent or design or any alleged patent or design rights and shall pay any royalties or other charges which may be payable in respect of any article or materials or part thereof included in the contract. In the event of any claim being made or action being brought against BHEL or any agent, servant or employee of BHEL in respect of any such matters as aforesaid, the contractor shall immediately be notified thereof, provided that such indemnity in complying with the specific directions issued by BHEL but the contractor shall by any royalties or other charges payable in respect of any such use, the amount so

paid being reimbursed to the contractor only if the use was the result of any drawings and/or specifications issued after submission of the tender.

C-22.5 All charges on account of octroi, royalty and all other taxes & duties on materials obtained for the works from any source shall be borne by the contractor.

C-22.6 The Engineer shall be entitled to have tests carried out as specified in the contract for any materials supplied by the contractor other than those for which, as stated above, satisfactory proof has already been furnished, at the cost of the contractor & the contractor shall provide at his expenses all facilities which the Engineer, may require for the purpose. If no test are specified in the contract, and such tests are required by the engineer, the contractor shall provide all facilities required for the purpose and the charges for these tests shall be by the contractor only. The cost of materials consumed in tests shall be borne by the contractor in all cases except when otherwise provided.

C-23.0 **GENERAL:**

C-23.1 Material required for works, shall be stored by the contractor only at places approved by the Engineer. Proper storage and safe custody of material including construction stores shall be the responsibility of the contractor for which no charges shall be claimed by the contractor.

C-23.2 BHEL's officials concerned with the contract shall be entitled at any time to inspect and examine any materials intended to be used in or on the works, either on the site or at factory or workshop or other place(s) where such materials are assembled, fabricated, manufactured or at any place(s) where these are laying or from which these are being obtained and the contractor shall give such facilities as may be required for such inspection and examination.

C-23.3 All materials brought to the site shall become and remain the property of BHEL and shall not be removed off the site without the prior written approval of the engineer. But whenever the works are finally completed and advance, if any, in respect of any such material is fully recovered, the contractor shall at his own expense forthwith remove from the site all surplus material originally supplied by him and upon such removal, the same shall revert in and become the property of the contractor.

C-24.0 **DELAY AND EXTENSION OF TIME:**

If, in the opinion of the Engineer, the work is delayed

i) by reason of abnormally bad weather, or

ii) by reason of serious loss or damage by fire, or

iii) by reason of civil commotion, local combination of workmen, strike or lockout, affecting any of the trades employed on the work, or

iv) by delay on the part of the agency or tradesman engaged by the BHEL in executing work not forming part of the contract, or

v) by reason of any other cause which in the absolute discretion of the Engineer is beyond the contractor's control, then in any such case, the Engineer (or higher authority) may make fair and reasonable extension in the completion dates of the individual items of work of the contract as whole. Such extension which will be communicated to the contractor by the Engineer in writing shall be final and binding on the contractor. No other claim in this respect for compensation, idle labour or otherwise howsoever is admissible. Upon the happening of any such event causing delay the contractor shall immediately give notice thereof in writing to the Engineer but shall nevertheless use constantly his best endeavour to prevent or make good the delay and shall do all that may reasonably be required to the satisfaction of the Engineer to proceed with the work.

Above clause No. C-24.0 stands deleted. Please refer Annexure to conditions of contract for civil

C-25.0 **COMPENSATION/ PENALTY FOR DELAY IN COMPLETION:**

If the contractor fails to complete the works within the specified contractual period or extension of time granted by the Engineer, the BHEL shall have the right to deduct liquidated damage/penalty @ 0.5% of the contractual value per week of delay or part thereof, subject to a maximum of 10% of the contract value along with applicable GST (if any) on LD . Once the maximum limit of delay is reached (i.e. 20 week of delay) BHEL may consider termination of the contract and forfeit the Security deposit without prejudice to the other remedies under the contract. Amended/ revised contract value (Excluding ORC, Extra Works, Supplementary/ Additional Items and PVC) shall be considered for calculating LD/ penalty.

C-26.0 PRICE VARIATION:

DELETED

DELETED

Above clause No. C-26.0 stands deleted. Please refer Annexure to conditions of contract for civil works.

C-27.0 **OVER RUN CHARGES:**

C-27.1 DELETED

Above clause No. C-27.0 stands deleted. Please refer Annexure to conditions of contract for civil works.

C-28.0 **OCTROI AND OTHER DUTIES:**

C-28.1 All charges on account of Octroi and/or other duties on materials obtained for the work shall be borne by the contractor.

C-29.0 **TERMS OF PAYMENT:**:

C-29.1 The contractor shall be paid monthly running bill to a maximum of 95% (retaining 5% from each running bill) of value of the works actually executed on site provided the work has been executed to the satisfaction of the Engineer. The payment for tender work shall be admitted progressively on completion of work. However, work is to be executed as per time schedule prescribed by Engineer-In-Charge. In case of delay due to contractor, payment made equivalent to amount of work done in tower, equipment and trenches will be withheld from successive bills. From payable amount recoveries such as security deposit, income tax etc. would be made as per rule. The certificate of the Engineer regarding such approval and passing of sums so payable shall be final and conclusive against the contractor

C-29.2 The Engineer shall after a measured bill allow and certify payment to the contractor on the basis of abstract measurement bill submitted by contractor. However, the usual recoveries would be effected from bill.

C-29.3 Any certificate relating to the work done may be modified by any subsequent interim certificates or by the final certificate and no certificate of the Engineer supporting an advance payment shall of itself be conclusive evidence that any work or materials to which it relates are in accordance with the contract.

C-29.4 All intermediate payments shall be regarded as advance against the final payment only and shall not be considered as an admission of the due performance of the contract or any part thereof in any respect of the occurring of any claim whatsoever. Such intermediate payments shall not conclude, determine or effect in any way the powers of the Engineer as to the final settlement and adjustment of the account of otherwise, or in any way vary of affect the contract. To this affect the contractor shall submit the final bill, which shall contain the complete up-to-date measurements for the total work done.

C-29.5 The conditions for the release of last 5% retention money shall be as follows:

C-29.5.1 2.5% payment shall be released along with the final bill on completion of total work as certified by BHEL site.

C-29.5.2 Balance 2,5% of payment shall be released on completion of guarantee period. However these retention money can be released on submission of B.G. of equivelent amount valid till guarantee period.

The contractor shall guarantee the work under the scope of the contract for a period of 12 months from the date of start of the guarantee period as certified by BHEL site (i.e completion of total work under the scope and or taking over by BHEL/owner),and shall rectify free of cost all defects due to faculty supply or work done. In case the contractor fails to repair/ replace the defective work within the time specified by BHEL, BHEL may proceed to undertake such repair/replace such defective work at contract's risk and cost without prejudice to any other right and recover the sum from security deposit/BG/ any dues.

Above clause No. C-29.5.2 shall be read in conjunction with clause no. C-2.0.

C-29.6 Income Tax at the prevailing rate on gross value of work done and applicable surcharge shall be deducted from the running account bills unless exempted by the Income Tax Office.

C-29.7 **The prices to be quoted by bidder should be EXCLUSIVE of GST**

Please refer Annexure to conditions of contract for civil works for detail terms and conditions of taxes & duties.

C-30.0 **CEMENT AND STEEL: (Pl. also refer Annexure to conditions of contract for civil works for issue of Cement and steel in case of BHEL supply as mentioned in BOQ)**

C-30.1 The theoretical quantity of cement to be used in works shall be calculated on the basis of the designed mix concrete and as per CPWD norms for all the other items based on latest edition in use in CPWD works Delhi at the time of submitting tender.

C-30.2 The theoretical weight of reinforcing steel shall be derived on the basis of sectional weights as per relevant Indian Standards & the lengths for purpose of consumption/reconciliation and payment. No claim shall be entertained from the contractor as such for the difference in theoretical/actual weight of steel during reconciliation or payment for fixing.

C-30.3 Clogging of cement and rusting of steel should be avoided to the maximum extent possible without hampering the continuity of construction/erection. In case due to any cause, attributable to contractor such clogging of cement and/or rusting of steel occurs rendering the same unusable, the contractor shall remain responsible to make good the loss at his own cost.

C-30.4 The contractor shall plan & arrange procurement of steel, cement and other materials as required every month in consultation with the Engineer. Failing compliance to this requirements, further execution of work of the contractor by the BHEL may be suspended and no compensation for delay in the execution of the work or suspension of the works caused on account of the above shall be entertained.

C-30.5 No materials shall be issued to the contractor except for those specified in Section C-22.0. Contractor shall maintain record of day to day issue and consumption of materials at site like cement, bitumen, lead, paint etc. The contractor will have to make his own arrangements at his own cost for procurement of all materials as required for the works and of such quality as per specification and acceptable to the Engineer.

C-30.6 In case any additional expenditure is incurred in work arising out of the faulty execution of such work by the contractor, such additional expenditure shall be borne by the contractor.

C-31.0 **QUALITY ASSURANCE:**

C-31.1 The contractor has to establish at site the field testing facilities for testing of civil construction materials & concrete cubes and other works as required under the approved Field Quality Plan of BHEL/its customer for ensuring the proper quality, grade and strength of the materials used in the construction. If further test is required by the Engineer to be carried from outside laboratory, the cost of the same shall be borne by contractor (copies of the Field Quality Plan & other Inspection & Test procedures to be followed shall be issued after mobilisation by the sub-contractor).

C-31.2 The contractor has to arrange for calibration of all test equipment/instruments brought by him as per the requirement of BHEL calibration procedure as directed by the Engineer. The test certificates/calibration certificates shall have to be submitted. BHEL site shall control use of these equipment/ instruments by allotting control number and permitting use of only those equipment/ instruments which are under calibrated status.

C-32.0 **CLEARANCE OF SITE AND REPAIRS:**

C-32.1 The contractor has to clear the site/area where mechanical and electrical erection work is to be commenced/or in progress. The contractor shall remove construction materials and equipment lying in the vicinity and causing

obstruction in the erection work within 24 hours notice. In case, he fails to clear the site, this will be done at his risk and cost by BHEL. For the works executed by the contractor, the deficiencies pointed out must be attended within specified period.

C-33.0 **PROTECTION OF WORK:**

C-33.1 The contractor shall have total responsibility of protecting his works till it is finally taken over by the Engineer. No claim will be entertained by the Engineer for any damage or loss to the contractor's works and the contractor shall be responsible for the complete restoration of damaged works to its original condition to comply with specifications and drawings. Should any such damage to the contractor's works occur because of other party not under his supervision or control, the contractor shall make his claim directly with the party concerned. The contractor shall not cause any delay in the repair of such damaged works because of any delay in the resolution of such disputes. The contractor shall proceed to repair the work immediately and no cause thereof will be assigned pending resolution of such disputes.

C-34.0 **RECORD FOR MATERIALS CONSUMED:**

C-34.1 The contractor has to maintain and furnish to the Engineer the record of materials procured and consumed in the works for each activity. The statement showing the theoretical vis-s-vis actual consumption of specified materials, such as structural/reinforcement steel, cement, bitumen, lead, paint etc. shall be enclosed along with the running bills submitted by the contractor. Contractor has to also furnish the test results of the concrete cubes, bricks, stone aggregate and other materials used in work as per IS specifications along with the running bills.

C-35.0 **SECURED ADVANCE ;**

C-35.1 DELETED

a)
b)
c)
d)
e)
f)

C-35.2

DELETED

Above clause No.C-35.0 stands deleted. Please refer Annexure to conditions of contract for civil works

ANNEXURE TO CONDITIONS OF CONTRACT FOR CIVIL WORKS

The following terms and conditions shall form a part of the tender document. If any discrepancies found between below mentioned clauses and clauses in the Conditions of Contract for Civil Works, Doc.No.-TB-Civil-GCC, Rev-02, the clauses mentioned in this annexure shall prevail.

A. Condition of Contract for Civil works (DOC. NO. – TB-Civil-GCC, Rev-02):

A.1. GENERAL INSTRUCTION

A.1.1. **All pages of the tender documents shall be duly signed, stamped and submitted along with the offer in token of complete acceptance thereof.** The information furnished shall be complete by itself. The tenderer is required to furnish all the details and other documents as required in the following pages.

A.1.2. Tenderers are advised to study all the tender documents carefully. Any submission of tender by the tenderer shall be deemed to have been done after careful study and examination of the tender documents and with the full understanding of the implications thereof. Should the tenderers have any doubt about the meaning of any portion of the Tender Specification or find discrepancies or omissions in the drawings or the tender documents issued are incomplete or shall require clarification on any of the technical aspect, the scope of work etc., tenderer shall at once, contact the authority inviting the tender well in time (so as not to affect last date of submission) for clarification before the submission of the tender. Tenderer's request for clarifications shall be with reference to Sections and Clause numbers given in the tender documents. The specifications and terms and conditions shall be deemed to have been accepted by the tenderer in his offer. Non-compliance with any of the requirements and instructions of the tender enquiry may result in the rejection of the tender.

A.2. PROCEDURE FOR SUBMISSION OF SEALED TENDERS

A.2.1. Bidders may please refer Cl no. 02 to Cl no. 03 of the Notice inviting tender.

A.2.2. The tenders received after the specified time of their submission shall be treated as 'Late Tenders' and shall not be considered under any circumstances.

A.2.3. Tenders shall be opened by the officers concerned of BHEL at the time, date and venue as specified in the tender enquiry. Tenderer or their authorized representative may witness the bid opening.

A.2.4. The tenderer shall closely pursue all the clauses, specifications and drawings indicated in the Tender Documents before quoting. Should the tenderer have any doubt about the meaning of any portion of the Tender Specifications or find discrepancies/omission in the drawings or the tender documents issued are incomplete or shall require clarification on any of the technical aspect, scope of work etc. he shall at once contact the authority inviting the tender for clarification before the submission of the tender.

A.2.5. Before submission of offer, the tenderer is advised to inspect the work & the environments and be well acquainted with the actual working and other prevalent conditions, facilities available, sourcing of material and labour, means of transport and access to site, accommodation, etc. No claim will be entertained later on the grounds of lack of knowledge on any of these conditions/ resources.

A.2.6. Tenderer must fill up all the schedules and furnish all the required information as per the instructions given in various sections of the tender specification. Each and every page of the Tender Specification must be SIGNED AND SUBMITTED ALONG WITH THE OFFER by the Tenderer in token of complete acceptance thereof the information

furnished shall be complete by itself.

A.2.7. The tenderer shall quote the rates in English Language and international numerals. Total price offered should be entered in figures as well as in words. For the purpose of the tender, the metric system of units shall be used.

A.2.8. The tenderer shall quote a percentage above/ below/At Par the rates shown in the "Bill of Quantities Cum Price Schedule (Annexure-I)" of subject tender.

A.2.9. The quoted percentage will apply to the individual items of "Annexure-I i.e. Bill of Quantity Cum Price Schedule" uniformly.

A.2.10. All entries in the tender shall either be typed or be written legibly in ink. Erasing and overwriting are not permitted and may render such tender liable for rejection. All cancellations and insertions shall be duly attested by the tenderer.

A.2.11. The tenderer must provide the registered e-mail of their registered office along with the addresses and authorised phone/mobile nos.

A.3. **ADJUSTMENT PRICE DISCREPANCY (IES): - Not Applicable being e procurement.**

A.4. **EVALUATION OF TECHNICAL BIDS**

A.4.1. Technical Bids submitted by the tenderer will be opened first and evaluated for fulfilling the Pre-Qualification criteria and other conditions in NIT/Tender documents, based on documentary evidences submitted along with the offer.

A.4.2. In case the same qualifying experience is claimed by more than one bidder due to subletting of work by main contractor to subcontractor (s) then following conditions shall be applicable.

A.4.2.1. For labour + consumable contract without material and T&P:

Benefit of work experience shall be given to the subcontractor who has actually executed job and not to the contractor offloaded down the line.

A.4.2.2. For contract with complete scope i.e. with materials, T&P, labour and consumable:

i) Benefit of work experience shall be given to the subcontractor who has actually executed job and not to the contractor offloaded down the line.
ii) If the contractor offloads the labour and/or T&P portion only, benefit of work experience shall be given to the main contractor and not to the subcontractor who has executed only as labour supply contractor

The bidder's qualification shall be subject to submission of documentary proof. BHEL reserves the right to ask for further proofs including submission of TDS certificates/ for the said job.

A.4.3. In case the qualifying experience is claimed by private organizations based on Work Order and completion certificates from another private organization, BHEL reserves the right to ask for further proofs including submission of TDS certificates/ form 26AS /bills for the said job.

A.4.4. Credentials of all the bidders participating in open tender will be scrutinized thoroughly by the nominated committee w.r.t. the pre-qualifying requirement for the

tender.

A.4.5. Details of qualifying work(s) executed by the bidder will be forwarded to the principle employer for verification of the work with respect to completion, commencement & completion date, scope and value of the work executed. Performance feedback of the bidder will also be sought from the principle employer.

A.4.6. BHEL may conduct onsite verification of at least one of the qualifying works to verify completion of the work and evaluate capability and performance of the bidder.

A.4.7. 3The bidder representative may be called for the discussion with the committee. His originals may be verified by the committee. In addition to above their organization chart and detailed list of manpower, tools & plants and technical capability may be discussed and ascertained by the committee.

A.5. **EVALUATION OF PRICE BIDS**

A.5.1. Price Bids of unqualified bidders shall not be opened.

A.5.2. The offers will be evaluated on the basis of total price basis (refer "BILL OF QUANTITY AND PRICE SCHEDULE) as shown in the price bid.

A.5.3. Reasons for rejection of the bid shall be intimated in due course after issue of LOI/LOA to successful bidder and receipt of unconditional acceptance of LOI /LOA from the successful bidder.

A.5.4. In case of electronic Reverse Auction, the unqualified bidders shall not be allowed to participate in reverse auction.

A.6. **DOCUMENTS TO BE ENCLOSED:**

Full information shall be given by the tenderer in respect of the following.

A.6.1. Tenders shall be signed by persons duly authorized/empowered to do so. An attested copy of the Power of Attorney to be submitted in all cases except where the sole proprietor is the signatory to the tender documents.

A.6.2. *PERMANENT ACCOUNT NUMBER:*

Certified copies of Permanent Account Numbers as allotted by Income Tax Department for the Company / Firm / Individual Partners, etc. shall be furnished along with tender.

A.6.3. AUDITED BALANCE SHEET AND INCOME TAX RETURN:

Copy of Audited Balance sheets and income tax return for last three financial years (financial years as specified in PQR).

A.6.4. SOLVENCY CERTIFICATE:

If asked in NIT, bidder should submit solvency certificate (not older than 12 months from date of tender notification) issued by any scheduled bank.

A.6.5. DOCUMENT RELATED TO INCORPORATION OF BUSINESS ENTITY:

A.6.5.1. IN CASE OF INDIVIDUALTENDERER:

His/her full name, address and place & nature of business.

A.6.5.2. *IN CASE OF PARTNERSHIP FIRMS:*

The names of all the partners with address. A copy of the partnership deed/instrument of partnership duly certified by the Notary shall be enclosed.

A.6.5.3. *IN CASE OF COMPANIES:*

Date & place of registration including date of commencement certificate in case of Public Companies and the nature of business carried on by the company. Certified copies of Memorandum and Articles of Association are also to be furnished.

A.6.6. Offer forwarding letter over the letterhead.

A.6.7. *Declaration sheets (As per Prescribed format) over the letter head*.

A.6.8. *No Deviation certificates (As per Prescribed format) over the letterhead.*

A.6.9. GST Registration certificate: -

All the data required to be enclosed with the tender need to be furnished neatly typed, signed & stamped in the given formats only (in the form of separate sheets) failing which the tender may be considered as incomplete and is liable for rejection. Documentary proof wherever necessary also need to be enclosed.

A.7. **VALIDITY OF OFFER**

The rates in the Tender shall be kept valid for acceptance for a minimum period of **Four Months** from latest due date of offer submission (including extension(s), if any). In case BHEL (Bharat Heavy Electricals Limited) calls for negotiations, such negotiations shall not amount to cancellation or withdrawal of the original offer which shall be binding on the tenderer.

A.8. **REJECTION OF TENDER & OTHER CONDITIONS:**

A.8.1. The decision of acceptance of tender will rest with BHEL which does not bind itself to accept the lowest tender or any tender and reserves to itself full rights for the following without assigning any reasons whatsoever:

a) To reject any or all of the tenders.

b) To split up the work amongst two or more Tenderer as per NIT

c) To award the work in part as per NIT

d) In either of the contingencies stated in (b) and (c) above to modify the time for completion suitably.

A.8.2. Conditional tenders, unsolicited tenders, containing abnormally low/ unworkable rates & amounts, tenders which are incomplete or not in the form specified or defective or have been materially altered or not in accordance with the tender conditions, specifications etc. are liable to be rejected.

A.8.3. Tenders are liable to be rejected in case of unsatisfactory performance of the tenderer with BHEL, or tenderer under suspension (hold / banning / delisted) by any unit / region / division of BHEL or tenderers who do not comply with the latest guidelines of Ministry / Commissions of Govt. of India. BHEL reserves the right to reject a bidder in case it is observed that they are overloaded and may not be in a position to execute this job as per the required schedule in line with 'NIT'. The decision of BHEL will be final in this regard.

A.8.4. In case of any adverse information is received concerning performance, capability or conduct of the tenderer after issue of tender enquiry or opening of tender or award of work, BHEL reserves the right to reject the offer at any stage as deemed fit.

A.8.5. Offers with inadequate Tools & Plants, Manpower Deployment Plan, and Method Statement are liable for rejection.

A.8.6. If a tenderer who is a proprietor expires after the submission of his tender or after the acceptance of his tender, BHEL may at its discretion, cancel such tender. If a partner of a firm expires after the submission of the tender or after the acceptance of the tender, BHEL may cancel such tender at its discretion unless the firm retains its character.

A.8.7. BHEL will not be bound by any Power of Attorney granted by the tenderer or by changes in the composition of the firm made subsequent to the execution of the contract. BHEL may, however, recognise such Power of Attorney and changes after obtaining proper legal advice, the cost of which will be chargeable to the contractor concerned.

A.8.8. If the tenderer deliberately gives wrong information in his tender, BHEL reserves the right to reject such tender at any stage or to cancel the contract, if awarded, and forfeit the Earnest Money/Security Deposit/any other moneys due.

A.8.9. Canvassing in any form in connection with the tender is strictly prohibited and the tenders submitted by the tenderer who resorts to canvassing are liable to be rejected.

A.8.10. In case the Proprietor, Partner or Director of the Company / Firm submitting the Tender, has any relative or relation employed in BHEL, the authority inviting tender shall be informed to the fact as per specified format along with the offer, failing this, BHEL may, at its sole discretion reject the tender or cancel the contract and forfeit the Earnest Money/ Security Deposit.

A.8.11. The successful tenderer should not sub-contract the part or complete work detailed in the tender specifications without written permission of BHEL's Site In charge/ Sector Head. For this the contractor shall submit request application to site in charge supported by credentials (financial and technical) and resource mobilization schedule of such sub-contractor. Such request is to be considered in consultation with end user/ultimate customer (if applicable) and subject to satisfactory credentials, fund flow arrangement between them, HSE and other contractual and statutory

obligations. The tenderer is solely responsible to BHEL for the work awarded to him.

A.8.12. The Tender submitted by a tenderer shall become the property of BHEL who shall be under no obligation to return the same to the bidder. However unopened price bids and late tenders shall be returned to the bidders.

A.8.13. Unsolicited discount received after the due date and time of Bid Submission shall not be considered for evaluation. However, if the party who has submitted the unsolicited discount/rebate becomes the L-I party, then the awarded price i.e. contract value shall be worked out after considering the discount so offered.

A.8.14. BHEL shall not be liable for any expenses incurred by the bidder in the preparation of the tender irrespective of whether the tender is accepted or not.

A.9. **NO DEVIATIONS ARE ACCEPTABLE: -**

Offers with deviations are likely to be rejected. However, if the bidder insists on any technical or commercial deviations from the specifications and / or tender conditions, **the price implication, if any, of withdrawing the deviations must be submitted along with the price bid in a separate sealed envelope** super-scribed "**PRICE IMPLICATION FOR WITHDRAWAL OF DEVIATIONS**". No price implication for withdrawal of deviation shall be accepted at a later date, after opening of technical bid.

A.10. Consortium/ JV bidding is not allowed under this NIT.

B. EARNEST MONEY DEPOSIT

Every tender must be accompanied by the prescribed amount of Earnest Money Deposit (EMD) mentioned in NIT.

B.1. Mode of EMD deposit:

Every tender must be accompanied by the prescribed amount of Earnest Money Deposit (EMD) mentioned in NIT.

Mode of EMD deposit:

EMD can be submitted in any one of the following modes:

i) Cash deposit as permissible under the extant Income Tax Act (before tender opening),

ii) Electronic Fund Transfer credited in BHEL account (before tender opening). Details of BHEL account mentioned in tender document.

iii) Banker's cheque/Pay order/Demand Draft, in favour of 'BHEL' and payable at New Delhi (Along with offer)

iv) Fixed Deposit Receipt (FDR) issued by schedule Banks/Public Finance Institutions as defined in the companies ACT (FDR should be in the name of the contractor, a/c BHEL

v) In case total EMD amount is more than Rs. 2 Lakh, the amount in excess of Rs. 2 lakhs may be accepted in the form of Bank Guarantee from scheduled bank. The Bank Guarantee in such cases shall be valid for at least six months.

No other form of EMD remittance shall be acceptable to BHEL.

Note: The Submission of EMD is compulsory for subject tender. In case requisite Amount of EMD not submitted by the bidder along with offer or before technical bid opening, the offer shall not be considered for evaluation and the offer shall be rejected.

B.2. Forfeiture of EMD

EMD by the bidder will be forfeited as per NIT conditions, if

i) After opening the tender and within the offer validity period, the bidder revokes his tender or makes any modification in his tender which is not acceptable to BHEL.

ii) The contractor fails to deposit the required Security deposit or commence the work within the period as per LOI/contract.

B.3. EMD by the tenderer shall be withheld in case any action on the tenderer is envisaged under the provision of extant "Guidelines on Suspension of business dealing with supplier/contractors" and forfeited/ released based on the action as determined under these guidelines.

B.4. In the case of unsuccessful bidders, the Earnest Money will be refunded to them within a reasonable time after award of work.

B.5. EMD shall not carry any interest.

B.6. EMD of successful bidder shall be retained as part of Security Deposit.

B.7. Bidders may please note that "One Time EMD" provision stands deleted. Hence, bidders who have deposited Rs. 2 Lakh as 'One Time EMD' with BHEL are also required to submit the requisite amount of EMD.

B.8. **No MSE benefits shall be given to MSEs bidder for WORKS CONTRACT. Please refer clause no. R (facilities provided to MSEs) for detail.**

C. SECURITY DEPOSIT

Security Deposit means the security provided by the Contractor towards fulfilment of any obligations in terms of the provision of the contract.

C.1. Upon acceptance of Tender, the successful Tenderer should deposit the required amount of Security Deposit for satisfactory completion of work. **The total amount of Security Deposit will be 5% of the Contract Value. EMD of the successful tenderer shall be converted and adjusted towards the required amount of Security Deposit.**

C.2. Mode of Security deposit:

The security Deposit should be furnished **before start of the work** by the contractor.

"Bidders agrees to submit performance security required for execution of the contract within the time period mentioned. In case of delay in submission of Performance security, enhanced performance security which would include interest (SBI rate + 6%) for the delayed period, shall be submitted by the bidder. Further, if performance security is not submitted till such time the first bill becomes due, the amount of performance security due shall be recovered as per terms defined in NIT / Contract, from the bills along with due interest".

The balance amount to make up the required Security Deposit of 5% of the contract Value may be furnished in any of the following forms:

i) Cash (as permissible under the extant Income Tax Act)

ii) Local cheques of scheduled banks (subject to realization) / Pay Order / Demand Draft / Electronic Fund Transfer, in favour of BHEL.

iii) Bank Guarantee from Scheduled Banks / Public Financial Institutions as defined in the Companies Act. The Bank Guarantee format for Security Deposit shall be in the prescribed formats enclosed with general conditions of contract.

iv) Fixed Deposit Receipt issued by Scheduled Banks / Public Financial Institutions as defined in the Companies Act. The FDR should be in the name of the contractor, A/C BHEL and duly discharged on the back.

v) Securities available from Indian Post Offices such as National Savings Certificates, Kisan Vikas Patras etc. (Certificates should be held in the name of Contractor furnishing the security and duly endorsed/hypothecated/pledged, as applicable, in favour of BHEL and duly discharged on the back).

(NOTE: BHEL will not be liable or responsible in any manner for the collection of interest or renewal of the documents or in any other matter connected therewith)

C.3. Submission of Security Deposit:

i) At least 50 % of the required Security Deposit, including the EMD, shall be submitted before start of work. Balance of the Security Deposit can be submitted by way of deduction of 10% of the gross amount progressively from each running bills of the contractor till the total amount of the required Security Deposit is collected.

ii) If the value of work done at any time exceeds the contract value, the amount of Security Deposit shall be correspondingly enhanced and the additional Security Deposit shall be immediately deposited by the Contractor or it shall be recovered from payment/s due to the Contractor.

iii) The recoveries made from running bills (cash deduction towards balance SD amount) can be released against submission of equivalent Bank Guarantee in acceptable form, but only once, before completion of work, at the discretion of BHEL.

C.4. The BG shall be submitted only through the Banker. Along with the BG, the Bank shall also furnish a letter of confirmation (in the prescribed formats enclosed with general conditions of contract).

C.5. The validity of the Bank Guarantee furnished towards Security Deposit shall be up to three months more than the period of completion of work as stipulated in the LOI and the same will be kept valid by proper renewal till the completion of the work.

C.6. BHEL reserves the right of forfeiture of Security Deposit in addition to other claims and penalties in the event of the contractor's failure to fulfil any of the contractual obligations or in the event of termination of contract as per terms and conditions of the contract. BHEL reserves the right to set off the Security Deposit, against any claims of any other contracts with BHEL.

C.7. **Conditions for acceptance of bank guarantees**

Contractors are advice to obtain Bank Guarantee preferably from any of the following BHEL consortium banks

Sl. No.	Name of Bank	Sl. No.	Name of Bank
1	State Bank of India	11	Punjab National Bank
2	Canara Bank	12	Union Bank of India
3	IDBI Bank Limited	13	Yes Bank Limited
4	ICICI Bank Limited	14	RBL Bank Ltd.
5	HDFC Bank Limited	15	Standard Chartered Bank
6	Axis Bank	16	Indian Overseas Bank
7	IndusInd Bank Limited	17	Kotak Mahindra Bank Limited
8	Bank of Baroda	18	Federal Bank Limited
9	Exim Bank	19	Hongkong and Shanghai Banking Corporation Ltd
10	Indian Bank		

Bank Guarantees from Banks outside BHEL's consortium shall be as below:

The Bank Guarantees of all Public sector banks can be accepted (in addition to consortium banks)

The Bank Guarantees of Co-operative banks shall not be accepted.

Bank Guarantees of other than consortium bank and public sector bank can be accepted subject to an overall exposure limit (at New Delhi) of Rs. 10 crores for banks with net worth of more than Rs. 500 crores as on last balance sheet date and Rs 5 crores for banks with net worth between Rs. 350 to Rs 500 crores (A certificate and copy of latest Balance Sheet to be given by the Bank at the time of submission of Bank Guarantees).

In case of private sector banks, a clause to be incorporated in the text of Bank Guarantee that it can be enforceable by being presented at any branch of the bank.

In case of foreign vendors, the bank guarantees issued by foreign banks may be confirmed by our consortium bank in India.

In case of Bank Guarantees given by Non-Consortium banks (Private sector or Public sector), the Bank Guarantees are to be enforceable in New Delhi or the town/ city in which the sector office is located.

C.8. **RETURN OF SECURITY DEPOSIT:**

If the contractor duly performs and completes the work in all respects to the entire satisfaction of BHEL and presents an absolute "No demand certificate", returns properties belonging to BHEL, taken, borrowed or hired by him for carrying out the said works, and furnishes performance bond BG in the prescribed proforma, Security Deposit will be released to the contractor after deducting all costs, expenses and other amounts that are to be paid to BHEL under this contract or other contracts entered into with the contractor. It may be

noted that in no case the Security Deposit shall be refunded/released prior to passing of final bill.

D. Bank Account Details for submission of EMD/ Security Deposit through electronic fund transfer mode.

NAME OF THE COMPANY	**BHARAT HEAVY ELECTRICALS LTD**
ADDRESS OF THE COMPANY	**TRANSMISSION BUSINESS GROUP, 10TH FLOOR, JOY TOWER, PLOT NO. *C-20,* 1/1A, C BLOCK, PHASE 2, INDUSTRIAL AREA, SECTOR-62, NOIDA – 201301 (U.P.)**
NAME OF BANK	**STATE BANK OF INDIA**
NAME OF BANK BRANCH	**CAG-II NEW DELHI (17313)**
CITY	**NEW DELHI**
ACCOUNT NUMBER	**00000030206227732**
ACCOUNT TYPE	**CASH CREDIT**
IFSC CODE	**SBIN0017313**

E. Overall price variation-

The individual quantity can vary to any extent or may be deleted for which no compensation will be payable to the contractor and the rates will remain firm. Also the rate of each item remains firm as long as the variation in the total value of work executed under the contract including extra items if any remains within plus/minus 30 percent of the contract value. In case the actual value of executed work including extra work on completion of work becomes less than 70% of the basic/original contract value than the following method shall be adopted.

The actual executed value shall be raised by 7% (For arriving at the final payment against work executed) subject to the condition that total value of work executed plus increase by 7% as above shall be limited to 70% of the basic/original contract value. The rate quoted shall be firm irrespective of any upward variation in the contract price.

It is further clarified that the enhancement/rate revision on the basic rate as per PVC clause shall not be accounted for the purpose of operating this clause.

F. Clause no. C-25.0 "COMPENSATION/PENALTY FOR DELAY IN COMPLETION" stands deleted. Now this clause shall be read as below: -

In case the contractor fails to complete the project within the time specified in the tender specification or any extension thereof subject to force majeure condition, the contractor shall be liable to pay by way of LD/Penalty a sum equal to the half percent of the contract price, per calendar week or part thereof by which the commissioning of the project is delayed, subject to ceiling of 10 % of the contract price. Once the maximum limit of delay is reached (i.e. 20 week of delay) BHEL may consider termination of the contract and forfeit the Security deposit without prejudice to the other remedies under the contract.

Amended/ revised contract value (excluding ORC, Extra Works, Supplementary/Additional Items and PVC) shall be considered for calculating LD/ penalty.

G. Clause No. C.29.7 "INCOME TAX/SALES TAX/WORKS TAX/VAT" stands deleted. Now this clause shall be read as below.

G.1. All taxes (except GST), duties, charges, royalties, cess and any other levies by Central/ State/local authorities for the execution of the contract shall be borne by the

contractor and shall not be payable extra. Any increase of the same at any stage during execution of the contract shall be borne by the contractor. Quoted price of the same shall be inclusive of all such requirements.

G.2. Contractors have to make their own arrangement at their cost for completing the formalities, if required with relevant taxation authorities, for bringing their material, plant and machinery at site for the execution of the contract. Road permits / way bill, if required shall be arranged by the contractor.

G.3. The Contractor is responsible to furnish documentary evidence towards GST Registration of the State wherein the site is located or any other documents as per GST Act which may be required from time to time. BHEL will not be held to be responsible for any non-compliance of the Contractor in respect of GST laws as framed from time to time.

G.4. Goods and Service Tax (GST) will be reimbursed to the Contractor subject to the following conditions: -

(i) Submission of valid GST Compliant Tax Invoice as per the GST Invoice Rules.

(ii) The Invoice raised by the Contractor should indicate the BHEL GST Registration Number.

G.5. The GST amount shall get reflected within prescribed time limit in the GSTN for BHEL to avail the input credit. If the GST Credit is reversed/ denied/ delayed to BHEL due to non-receipt/delayed receipt of Services and/or tax invoice or due to expiry of timeline prescribed in GST law or due to any other factor for availing such Input Tax Credit (ITC) or for any other reason arising out of the act directly attributable to the Contractor, GST amount shall be recoverable from Contractor from any dues payable to the Contractor along with any interest levied/ leviable on BHEL.

G.6. Statutory variation, if any, on account of GST will be payable by BHEL at actuals on submission of documentary evidence.

G.7. TDS under Income Tax Act/ GST Act shall be deducted as per applicable rates unless Exemption certificate, if applicable, from the appropriate Authority is furnished to BHEL along with the Invoice.

G.8. **New Taxes & duties (Introduced after tender opening date):**

If any new tax or duty is levied by the Central/State Government/Municipality/Local Authority and becomes directly applicable on items specified in the Bill of Quantities, full reimbursement shall be made subject to submission of documentation as per statute.

H. Clause C-27.0 of "Over run charges" under special conditions of contract is now deleted. No overrun charges are payable under the contract.

I. Clause C-35.0 "secured advance" under special conditions of contract is now deleted. No advance on materials shall be payable under the contract.

J. Clause C-26.0 "Price Variation" under special conditions of contract is now deleted and now this Clause should be read as below.

J.1. In order to take care of variation in cost of execution of work on either side, due to variation in the index of LABOUR, HIGH SPEED DIESEL OIL, CEMENT, MATERIALS, Price Variation Formula as described herein shall be applicable (*only for works executed during extended period, if any, subject to other conditions as described in this section*).

J.2. 85% component of Contract Value shall be considered for PVC calculations and remaining 15% shall be treated as fixed component. The basis for calculation of price variation in each category, their component, Base Index shall be as under:

SL No.	CATEGORY	BASE INDEX	Percentage Component
i)	LABOUR (ALL CATEGORIES)	'MONTHLY ALL-INDIA AVERAGE CONSUMER PRICE INDEX NUMBERS FOR INDUSTRIAL WORKERS' published by Labour Bureau, Ministry of Labour and Employment, Government of India. (Website: labourbureau.nic.in)	**30%**
ii)	HIGH SPEED DIESEL OIL	Name of Commodity: HSD Commodity Code: 1202000005 (**See Note A**)	**5%**
iv)	CEMENT	Name of Commodity: ORDINARY PORTLAND CEMENT Commodity Code: 1313050003 (**See Note A**)	**30%**
vi)	All OTHER MATERIALS (Other than Cement & Steel)	Name of Commodity: ALL COMMODITIES Commodity Code:1000000000 (**See Note A**)	**20%**

Note: A) As per the 'MONTHLY WHOLE SALE PRICE INDEX' for the respective Commodity and Type, published by Office of Economic Adviser, Ministry of Commerce and Industry, Government of India. (Website: http://eaindustry.nic.in/home.asp). Revisions in the index or commodity will be re adjusted accordingly.

J.3. Payment/recovery due to variation in index shall be determined on the basis of the following notional formula in respect of the identified COMPONENT ('K') viz LABOUR, HIGH SPEED DIESEL OIL, CEMENT, MATERIALS.

$$\mathbf{P = K \times R \times \frac{(X_N - Xo)}{Xo}}$$

Where

P = Amount to be paid/recovered due to variation in the Index for Labour, High Speed Diesel Oil, Cement, and Materials

K = Percentage COMPONENT ('K') applicable for Labour, High Speed Diesel Oil, Cement, and Materials

R =Value of work done for the billing month (Excluding Taxes and Duties if payable extra)

X_N = Revised Index for Labour, High Speed Diesel Oil, Cement, and Materials for the billing month under consideration

Xo = Index for Labour, High Speed Diesel Oil, Cement, and Materials as on the Base date

J.4. Base date shall be the calendar month of the schedule completion date as per NIT.

J.5. PVC shall not be payable for the ORC amount, Supplementary/Additional/Extra Items. However, PVC will be payable for work executed under quantity variation of BOQ items under originally awarded contract.

J.6. The contractor shall furnish necessary monthly bulletins in support of the requisite indices from the relevant websites along with his Bills

J.7. The contractor will be required to raise the bills for price variation payments on a monthly basis along with the running bills irrespective of the fact whether any increase/decrease in the index for relevant categories has taken place or not. In case there is delay in publication of bulletins (final figure), the provisional values as published can be considered for payments and arrears shall be paid/recovered on getting the final values.

J.8. PVC shall be applicable only, during the extended period of contract (if any) after the scheduled completion period and for the portion of work delayed / backlog for the reasons not attributable to the Contractor.

However total quantum of Price Variation amount payable/recoverable shall be regulated as follows:

J.8.1. For the portion of shortfall/ backlog not attributable to contractor, PVC shall be worked out on the basis of indices applicable for the respective month in which work is done. Base index shall be applicable as defined in clause J.4 above.

J.8.2. In case of Force majeure, PVC shall be regulated as per (a) or (b) below:

a) Force majeure is invoked before "base date"/"revised base date" (as explained below) OR immediately after "base date"/"revised base date" in continuation (i.e. during the period when PVC is not applicable):

i) Base date shall be revised: Revised base date =Previous base date + duration of Force majeure. No PVC will be applicable for the work done till revised base date

ii) PVC will be applicable for the work done after "base date"/"revised base date" as the case may be (during extended period when delay is not attributable to contractor). PVC shall be worked out on the basis of indices applicable for the respective month in which work is done with base index as on "base date"/ "revised base date" as the case may be.

b) Force majeure is invoked after "base date"/ "revised base date" as the case may be (during extended period when delay is not attributable to contractor)

i) PVC shall be applicable for the work done after revocation of force majeure.

ii) PVC for the work done after revocation of force majeure shall be worked out on the basis of indices applicable for the respective month in which work is done excluding the effect of change in indices during total period of Force majeure(s) invoked after "base date"/ "revised base date" as the case may be. Base index shall be taken as on "base date"/ "revised base date" as the case may be.

J.8.3. The total amount of PVC shall not exceed 10% of the cumulatively executed contract value. Executed contract value for this purpose is exclusive of PVC, ORC, Supplementary/Additional/Extra Items except extra works due to quantity variation of BOQ items under originally awarded contract.

K. REINFORCEMENT STEEL (APPLICABLE ONLY FOR BHEL FREE ISSUED STEEL):

K.1. The reinforcement steel for the works shall be supplied by BHEL as per BOQ. Hence under items of reinforcement steel in BOQ, the bidders are required to quote labour rates only. **(Applicable only for the items where BHEL supply is mentioned in the BOQ).**

K.2. The reinforcement steel shall be made available to the contractor within project area. The contractor shall collect these material form BHEL Store/ Storage yard. Loading and transportation from supplier stockyard to site is not in scope of the contractor. However, unloading, storage, watch & ward till handing over of complete work and lodging of insurance claim (if required) is included in the scope of bidder and deemed to be included in the quoted rates.

K.3. If due to Contractor's carelessness, negligence, non-observance of safety precautions, improper security arrangements or due to non-compliance of paper work needed for lodging insurance claim, damage to BHEL/its Customer's property and/or personnel should occur, and if BHEL is unable to recover its claim from the Insurance Company, the deficit will be recovered from the Contractor.

K.4. The steel issued to the contractor shall be mainly in standard length and section as received from the steel supplier. However, the contractors shall be bound to accept the steel in length as available. No claims for extra payment because of issue of nonstandard length will be entertained during execution.

K.5. **RETURN OF STEEL**

All surplus steel and all wastage materials shall be taken back on weighment basis. Surplus, unused and untampered steel shall be stored diameter / section wise and returned separately at a place directed by BHEL / engineer incharge within the project area. Return of such materials will not be entitled to any handling and incidental charges. All wastage / scrap (including melting scrap, wastage, unusable) shall be returned diameter/ section wise to the stores and a receipt obtained for material accounting purposes.

K.5.1. **CONSUMPTION:**

The theoretical consumption of various section / diameter of reinforcement shall be based on approved construction drawing and bar bending schedule, approved laps, chairs & lugs. The weight shall be calculated considering the sectional weights as per Indian standards. No extra cost shall be payable to the contractor for any deviation in weights for the different procedures adopted for issue and calculation for the theoretical consumption including rolling tolerances. The consumption / wastage shall be determined as under:

I) Actual consumption = (QTY issued by BHEL) – (surplus QTY returned by the contractor).

II) Surplus =Un-tampered and unused quantity of steel returned by the contractor to BHEL supported by relevant documents

III) Wastage = actual consumption - theoretical consumption (as erected quantity)

K.5.2. **WASTAGE**

Allowable wastage: (+5%) of the theoretical consumption shall be considered as allowable wastage.

Wastage is further classified as cut pieces [pieces of lengths 3 m and above] and scrap (including pieces of lengths less than 3 m) measured as per actual weighment basis.

Sl. No.	Reinforcement steel	Basis of issue & penal recovery
R-1	Theoretical consumption [without considering wastage and scrap of loss	Free
R-2	Wastage limited to plus five percent [+5%] of aforesaid theoretical consumption [r-1] towards allowable wastage [cut pieces plus scrap to be returned to BHEL]	Free
R-3	Wastage beyond five percent [+5%] of the theoretical consumption above (r-1).	Penal rate @ 50% over & above the procurement rate

L. RESPONSIBILITY OF CONTRACTOR IN RESPECT OF STATUTORY RULES / REGULATIONS PERTAING TO BOWC.

It shall be mandatory for the contractor to comply with Building and Other Construction Worker (Regulation of Employment and Conditions of Service) Act, 1996 and Rules of 1998 read with Building and other Construction Workers welfare Cess act, 1996 and Cess Rules.

It shall be the sole responsibility of the contractor to apply for a license to the Competent Authority under the Building and Other Construction Worker (Regulation of Employment and Conditions of Service) Act, 1996 and Rules of 1998 read with Building and other Construction Workers welfare Cess act, 1996 and Cess Rules and obtain proper certificate thereof by specifying the scope of its work. It shall also be responsibility of the contractor to furnish a copy of such certificate of license / permission to BHEL within 2 months from date of start of work at site or along with 1st RA bill whichever is earlier.

It shall be the responsibility of the sub-contractor to furnish the receipts / challans towards deposit of the cess together with the number, name and other details of beneficiaries (building or construction workers) engaged by the sub-contractor during the preceding month.

The onus shall lie on the contractor to register with the authorities and provide the details of the amount remitted to the authorities. In case the contractor fails to comply with the BOCW act, no payments shall be released to the contractor.

In case the customer owns the responsibility of compliance of BOCW act and deducts the amount from BHEL, the same shall be deducted from the RA bills of the contractor.

In the event of any penalty or other implication due to non-compliance of statutory

obligation the same shall be on contractor's account.

M. <u>Clause No. C.24.0 (Delay and Extension of Time) of Conditions of Contract for Civil Works has been modified as below</u>

If, in the opinion of the Engineer, the work is delayed

(i) by reason of abnormally bad weather, or

(ii) by reason of serious loss or damage by fire, or

(iii) by reason of civil commotion, local combination of workmen, strike or lockout, affecting any of the trades employed on the work, or

(iv) by delay on the part of the agency or tradesman engaged by the BHEL in executing work not forming part of the contract, or

(v) By reason of any other cause which in the absolute discretion of the Engineer is beyond the contractor's control, then in any such case, the Engineer (or higher authority) may make fair and reasonable extension in the completion dates of the individual items of work of the contract as whole. Such extension which will be communicated to the contractor by the Engineer in writing shall be final and binding on the contractor. No other claim in this respect for compensation, idle labour or otherwise howsoever is admissible. Upon the happening of any such event causing delay the contractor shall immediately give notice thereof in writing to the Engineer but shall nevertheless use constantly his best endeavour to prevent or make good the delay and shall do all that may reasonably be required to the satisfaction of the Engineer to proceed with the work.

(vi) In case of delay in completion of work BHEL reserve the right to grant time extension under the following options depending upon the performance of the vendor:

a) Time extension without levy of LD in case it is found that delay is not attributable to the vendor

b) Time extension with deduction of applicable LD in line with Liquidity Damage clause if the delay is solely attributable to the vendor.

c) In case facts of delay is not settled, BHEL reserve the right to grant provisional time extension for delay in completion of total work or part thereof and running/ interim payments to the vendor will be released without deduction of LD subject to submission of additional Bank guarantee equivalent to maximum LD amount valid till completion of work under their scope and grant of final time extension.

During provisional time extension period ORC/ PVC shall not be payable to the contractor. The Final Delay analysis shall be prepared on completion of the work. In case of delay is not attributable to contractor as per final delay analysis the ORC/ PVC shall be released along with the final bill without any interest charges attributable to BHEL.

In case of delay attributable to contractor, LD shall be deducted for that period in line with clause "Compensation/ LD/ Penalty for

delay in execution" of conditions of contract and balance ORC/ PVC (if any) shall be released along with the final bill without any interest charges attributable to BHEL.

PVC/ ORC shall be governed by respective clauses in the NIT.

N. <u>Model Conciliation Clause for Conducting Conciliation Proceedings Under the BHEL Conciliation Scheme, 2018</u>

The Parties the if at any time (whether before, during or after the arbitral or judicial proceedings), any Disputes (which terms shall means and include any dispute, difference, question or disagreement arising in connection with construction, meaning, operation, effect, interpretation or breach of the agreement, contract or the Memorandum of Understanding (delete whichever is inapplicable), which the parties unable to settle mutually), arise inter-se the Parties, the same may, be refereed by either party to conciliation to be conducted through Independent Experts Committee to be appointed by competent authority of BHEL from the BHEL Panel of Conciliators.

Notes:

1) No serving or a retired employee of BHEL/Administrative Ministry of BHEL shall be included in the BHEL Panel of Conciliators.
2) Any other person(s) can be appointed as Conciliator(s) who is/are mutually agreeable to both the parties from outside the BHEL Panel of Conciliators.

The proceedings of Conciliation shall broadly be governed by Part-III of the Arbitration and Conciliation Act 1996 or any statutory modification thereof and as provided in Annexure-A to this GCC.
The Annexure-A together with it's appendices will be treated as if the same is part and parcel hereof and shall be as effectual as if set out herein in these GCC."

O. <u>RIGHTS OF BHEL</u>: - The Clause No. B.7.0 "RIGHTS of BHEL" of Conditions of contract for Civil works stands deleted. Now the modified clause shall be read as below: -

BHEL **reserves** the following rights in respect of this contract during the original contract period or its extensions if any, as per the provisions of the contract, without entitling the contractor for any compensation

O.1. To withdraw any portion of work (after due opportunity given to contractor to meet schedule**)** &/or to restrict/alter quantum of work as indicated in the contract during the progress of construction and get it done through other agency to suit BHEL's commitment to its customer or in case BHEL decides to advance the date of completion period due to other emergent reasons/BHEL's obligations to its customer.

O.2. To restrict or increase the quantity and nature of work to suit site requirements, since the tender specification is based on preliminary documents and quantities furnished therein are indicative and approximate. Quantity/ contract variation clause may also be read in conjunction with this clause.

O.3. To terminate the contract or to restrict the quantum of work and pay for the portion of work executed in case BHEL's contracts with its customer are terminated/ altered/ deferred/ disputed/on hold for any reason as per mutual agreement.

O.4. To effect recovery from any amounts due to the contractor under this or any other contract or in any other form, the moneys BHEL is statutorily forced to pay to anybody, due to contractor's failure to fulfill any of his obligations. BHEL shall levy overheads of 5% on all such payments.

O.5. While every endeavour will be made by BHEL to this end, they cannot guarantee uninterrupted work due to conditions beyond their control. The Contractor will not be

normally entitled for any compensation/extra payment on this account unless otherwise specified elsewhere in the contract. No idle labour charges will be payable by BHEL in any case.

O.6. To deploy BHEL's skilled and unskilled workmen in case of emergency/poor progress/deficiency in skill on the part of the employees of the contractor and to recover the expenditure on account of the same from the moneys due to the contractor.

O.7. In event of termination of contract/ withdrawal/ the contractor shall have no claim to compensate for any loss sustained by him by reason of having purchase of any material or entered into agreement or made any advance on account of execution of work/ contract on account of any profit or advantage which he might have derived from the execution of the works in full but which he did not derive in consequence of the termination/ withdrawal of works.

O.8. In the event of any dispute of technical nature, the decision of BHEL shall be final and binding on the Contractor.

O.9. **Risk & Cost Clause**

In case of fault of the contractor, BHEL reserves the following rights without entitling the contractor for any compensation:

O.9.1. To terminate the contract or withdraw portion of work and get it done through other agency, at the risk and cost of the contractor after due notice of a period of 14 days' by BHEL in any of the following cases:

i) Contractor's poor progress of the work vis-à-vis execution timeline as stipulated in the Contract, backlog attributable to contractor including unexecuted portion of work does not appear to be executable within balance available period considering its performance of execution.

ii) Withdrawal from or abandonment of the work by contractor before completion of the work as per contract.

iii) Non-completion of work by the Contractor within scheduled completion period as per Contract or as extended from time to time, for the reasons attributable to the contractor.

iv) Termination of Contract on account of any other reason (s) attributable to Contractor.

v) Assignment, transfer, subletting of Contract without BHEL's written permission.

vi) Non-compliance to any contractual condition or any other default attributable to Contractor.

O.9.2. **Risk & Cost Amount against Balance Work**:

Risk & Cost amount against balance work shall be calculated as follows:

Risk & Cost Amount = **[(A-B) + (A x H/100)]**

Where,

A= Value of Balance scope of Work (*) as per rates of new contract

B= Value of Balance scope of Work (*) as per rates of old contract being paid to the contractor at the time of termination of contract i.e. inclusive of PVC & ORC, if any.

H = Overhead Factor to be taken as 5

In case (A-B) is less than 0 (zero), value of (A-B) shall be taken as 0 (zero).

* Balance scope of work (in case of termination of contract):

Difference of Contract Quantities and Executed Quantities as on the date of issue of Letter for 'Termination of Contract', shall be taken as balance scope of Work for calculating risk & cost amount.

Contract quantities are the quantities as per original contract. If, Contract has been amended, quantities as per amended Contract shall be considered as Contract Quantities.

Items for which total quantities to be executed have exceeded the Contract Quantities based on drawings issued to contractor from time to time till issue of Termination letter, then for these items total Quantities as per issued drawings would be deemed to be contract quantities.

Substitute/ extra items whose rates have already been approved would form part of contract quantities for this purpose. Substitute/ extra items which have been executed but rates have not been approved, would also form part of contract quantities for this purpose and rates of such items shall be determined in line with contractual provisions.

However, increase in quantities on account of additional scope in new tender shall not be considered for this purpose.

NOTE: In case portion of work is being withdrawn at risk & cost of contractor instead of termination of contract, contract quantities pertaining to portion of work withdrawn shall be considered as 'Balance scope of work' for calculating Risk & Cost amount.

O.9.3. **LD against delay in executed work in case of Termination of Contract:**

LD against delay in executed work shall be calculated in line with LD clause of the contract, for the delay attributable to contractor. For limiting the maximum value of LD, contract value shall be taken as Executed Value of work till termination of contract.

Method for calculation of "LD against delay in executed work in case of termination of contract" is given below.

i) Let the time period from scheduled date of start of work till termination of contract excluding the period of Hold (if any) not attributable to contractor = T1
ii) Let the value of executed work till the time of termination of contract= X
iii) Let the Total Executable Value of work for which inputs/fronts were made available to contractor and were planned for execution till termination of contract = Y
iv) Delay in executed work attributable to contractor i.e. T2=[1-(X/Y)] x T1
v) LD shall be calculated in line with LD clause of the Contract for the delay attributable to contractor taking "X" as Contract Value and "T2" as period of delay attributable to contractor.

O.9.4. **Recoveries arising out of Risk & Cost and LD or any other recoveries due from Contractor**

Following sequence shall be applicable for recoveries from contractor after informing the contractor of the total proposed recovery:

i) Dues available in the form of Bills payable to contractor, SD, BGs against the same contract.

ii) Demand notice for deposit of balance recovery amount to be sent to contractor, if funds are insufficient to effect complete recovery against dues indicated in (a) above.

iii) If contractor fails to deposit the balance risk & cost amount within the period as prescribed in demand notice, following action shall be taken for balance recovery:

a) Dues payable to contractor against other contracts in the same Region/unit shall be considered for recovery.

b) If recovery cannot be made out of dues payable to the contractor as above, balance amount to be recovered, shall be informed to other Regions/Units for making recovery from the Unpaid Bills/Running Bills/SD/BGs/Final Bills of contractor.

c) In-case recoveries are not possible with any of the above available options, Legal action shall be initiated for recovery against contractor.

P. <u>PERFORMANCE MONITORING</u>:

The Contractors performance shall be continuously monitored during execution of work at site.

In case of contractor's performance is found not satisfactory during the execution of work at site, BHEL may take alternate remedial measures and may not consider the contractor for further tenders, if the contractor performance is not improved in spite of opportunities given by BHEL.

Q. <u>The Clause No. B.15.0 "Arbitration" of Conditions of contract for Civil works stands deleted. Now the modified clause shall be read as below:</u>

Q.1. Except as provide elsewhere in this Contract, in case amicable settlement is not reached between the Parties, in respect of any dispute or difference; arising out of the formation, breach, termination, validity or execution of the contract; or, the respective rights and liabilities of the Parties; or, in relation to interpretation of any provision of the contract; or, in relation to interpretation of any provision of the Contract; or, in any manner touching upon the contract, then, either Party may, by a notice in writing to the other Party refer such dispute or difference to the sole arbitration of an arbitrator appointed by Head of the BHEL Unit/Region/Division issuing the Contract.

The Arbitrator shall pass a reasoned award and the award of the Arbitrator shall be final and binding upon the Parties.

Subject as aforesaid, the provisions of Arbitration and Conciliation Act 1996 (India) or statutory modifications or re-enactments thereof and the rules made thereunder and for the time being in force shall apply to the arbitration proceedings under this clause.

The seat of arbitration shall be New Delhi.

The cost of arbitration shall be borne as per the award of the Arbitrator.

Subject to the arbitration in terms of clause L above, the court at New Delhi shall have exclusive jurisdiction over nay matter arising out of or in connection with this Contract.

Notwithstanding the existence or any dispute or differences and/or reference for the arbitration, the Contractor shall proceed with and continue without hindrance the

performance of its obligations under this contract with due diligence and expedition in a professional manner except where the contract has been terminated by either Party in terms of this contract.

Q.2. In the event of dispute or difference relating to the interpretation and application of the provisions of commercial contract(s) between Central Public Sector Enterprises (CPSEs)/ Port Trusts inter se and also between CPSEs and Government Departments/Organizations (excluding disputes concerning Railways, Income Tax, Customs & Excise Departments), such dispute or difference shall be taken up by either party for resolution through AMRCD as mentioned in DPE OM No.4(1)/2013-DPE9GM)/FTS-1835 dated 22.05.2018.

R. FACILITIES PROVIDED TO MSEs

Vide office memorandum F.No.21(8)/2011-MA dated 09.11.2016, Office of AS&DC, Ministry of MSME has issued clarification regarding definition of Goods and Services under the Public Procurement Policy of MSEs order-2012, In accordance with the Public Procurement Policy for MSEs order-2012 and OM regarding definition of Goods and Services issued by Ministry of MSME, it is clarified that benefits as envisaged in Public Procurement Policy for MSEs Order 2012 are to be provided in respect of the procurements related to the Goods and Services produced and provided by Micro and Small Enterprises (MSEs) only and **no benefits is to be given in Case of Works Contracts**.

S. BOCW CESS (TAXES, DUTIES & LEVIES):

S.1. **BUILDING & OTHER CONSTRUCTION WORKERS (REGULATION OF EMPLOYMENT AND CONDITIONS OF SERVICE) ACT, 1996 (BOCW Act) AND RULES OF 1998 READ WITH BUILDING & OTHER CONSTRUCTION WORKERS CESS Act, 1996 & CESS RULES, 1998.**

S.2. In case any portion of work involves execution through building or construction workers, then compliance to the above titled Acts shall be ensured by the contractor and contractor shall obtain license and deposit the cess under the Act. In the circumstances it may be ensured as under: -

S.3. It shall be the sole responsibility of the contractor in the capacity of employer to forthwith (within a period of 15 days from the award of work) apply for a licence to the Competent Authority under the BOCW Act and obtain proper certificate thereof by specifying the scope of its work. It shall also be responsibility of the contractor to furnish a copy of such certificate of licence/permission to BHEL within a period of one month from the date of award of contract.

S.4. It shall be the sole responsibility of the contractor as employer to ensure compliance of all the statutory obligations under these act and rules including that of payment / deposit of 1% cess on gross payment made for value of work involving building or construction workers engaged by the contractor within a period of one month from the receipt of payment.

S.5. It shall be the responsibility of the sub-contractor to furnish the receipts / challans towards deposit of the cess together with the number, name and other details of beneficiaries (building workers) engaged by the sub-contractor during the preceding month.

S.6. It shall be the absolute responsibility of the sub-contractor to make payment of all statutory payments & compensations to its workers including that is provided under the Workmen's Compensation Act, 1923.

S.7. The contractor shall, however ensure before deposit of any BOCW cess, that customer is not depositing the same in order to avoid excess deposit of cess.

S.8. The contractor shall bear cost of BOCW cess either by way of deposit or through recovery by BHEL in case the same is deposited by the customer.

S.9. In case of failure in above mentioned compliances, BOCW Cess @ 1% as well as applicable penalty as specified in BOCW Act/Rules shall be deducted from the contractor.

T. <u>Terms of Payment:</u>

T.1. The contractor shall be paid monthly running bill to a maximum of 95% (retaining 5% from each running bill) of value of the works actually executed on site provided the work has been executed to the satisfaction of the Engineer. From payable amount recoveries such as security deposit, income tax etc. would be made as per rule. The certificate of the Engineer regarding such approval and passing of sums so payable shall be final and conclusive against the contractor.

T.2. The Engineer shall after a measured bill allow and certify payment to the contractor on the basis of abstract measurement bill submitted by contractor. However, the usual recoveries would be effected from bill.

T.3. Any certificate relating to the work done may be modified by any subsequent interim certificates or by the final certificate and no certificate of the Engineer supporting an advance payment shall of itself be conclusive evidence that any work or materials to which it relates are in accordance with the contract.

T.4. All intermediate payments shall be regarded as advance against the final payment only and shall not be considered as an admission of the due performance of the contract or any part thereof in any respect of the occurring of any claim whatsoever. Such intermediate payments shall not conclude, determine or effect in any way the powers of the Engineer as to the final settlement and adjustment of the account of otherwise, or in any way vary of affect the contract. To this affect the contractor shall submit the final bill, which shall contain the complete up-to-date measurements for the total work done.

T.5. The conditions for the release of last 5% retention money shall be as follows:

T.5.1. 2.5% payment shall be released along with the final bill on completion of total work as certified by BHEL site.

T.5.2. Balance 2.5% of payment shall be released on completion of guarantee period. However, this retention money can be released on submission of B.G. of equivalent amount valid till guarantee period.

The contractor shall guarantee the work under the scope of the contract for a period of 12 months from the date of start of the guarantee period as certified by BHEL site (i.e. completion of total work under the scope and or taking over by BHEL/owner), and shall rectify free of cost all defects due to faulty supply or work done. In case the contractor fails to repair/ replace the defective work within the time specified by BHEL, BHEL may proceed to undertake such repair/replace such defective work at contractor's risk and cost without prejudice to any other right and recover the sum from security deposit/BG/ any dues.

U. Royalty:

The contractor shall pay the Royalty on sand, aggregate, earth material used for the project and the contractor has to submit the Royalty certificate to BHEL along with the RA bills.

V. All other terms and conditions of tender shall remain unchanged.

PROFORMA OF BANK GUARANTEE (in lieu of SECURITY DEPOSIT)

In consideration of Bharat Heavy Electricals Limited (hereinafter referred to as the 'Employer' which expression shall unless repugnant to the context or meaning thereof, include its successors and permitted assigns) incorporated under the Companies Act, 1956 and having its registered office at BHEL House, Siri Fort, New Delhi-110049 through its Unit at BHEL, Transmission Business Group, Noida (name of the Unit) having agreed to exempt _____(Name of the Vendor / Contractor / Supplier) with its registered office at_____[1] (hereinafter called the said "Contractor" which term includes supplier), from demand under the terms and conditions of the Contract reference No._____ dated _____ [2] valued at Rs……[3](Rupees ……) (hereinafter called the said Contract), of Security Deposit for the due fulfilment by the said Contractor of the terms and conditions contained in the said Contract, on production of a Bank Guarantee for Rs……[4] (Rupees……only),

We _____(indicate the name and address of the Bank) having its Head Office at _____(address of the head Office) (hereinafter referred to as the Bank), at the request of _____ [Contractor(s)], being the Guarantor under this Guarantee, do hereby irrevocably and unconditionally undertake to forthwith and immediately pay to the Employer, an amount not exceeding Rs._____without any demur, immediately on demand from the Employer and without any reservation, protest, and recourse and without the Employer needing to prove or demonstrate reasons for its such demand

Any such demand made on the bank, shall be conclusive as regards the amount due and payable by the Bank under this guarantee. However, our liability under this guarantee shall be restricted to an amount not exceeding Rs._____.

We undertake to pay to the Employer any money so demanded notwithstanding any dispute or disputes raised by the Contractor(s) in any suit or proceeding pending before any Court or Tribunal or Arbitrator or any other authority, our liability under this present being absolute and unequivocal.

The payment so made by us under this guarantee shall be a valid discharge of our liability for payment hereunder and the Contractor(s) shall have no claim against us for making such payment.

We, further agree that the guarantee herein contained shall remain in full force and effect during the period that would be taken for the performance of the said Contract and that it shall continue to be enforceable till all the dues of the Employer under or by virtue of the said Contract have been fully paid and its claims satisfied & the Employer certifies that the terms and conditions of the said Contract have been fully and properly carried out by the said contractor(s) or acceptance of the final bill or discharge of this guarantee by the Employer, whichever is earlier. This guarantee shall initially remain in force up to and including_____[5] and shall be extended from time to time for such period as may be desired by the Employer. Unless a demand or claim under this guarantee is made on us in writing on or before the _____[6], (3 months more than the present date of validity of Bank Guarantee) we shall be discharged from all the liability under this guarantee thereafter.

We, _____ (indicate the name of the Bank) further agree with the Employer that the Employer shall have the fullest liberty without our consent and without affecting in any manner our obligations hereunder to vary any of the terms and conditions of the said Contract or to extend time of performance by the said contractor(s) from time to time or to postpone for any time or from time to time any of the powers exercisable by the Employer against the said contractor(s) and to forbear or enforce any of the terms and conditions relating to the said

Contract and we shall not be relieved from our liability by any reason of any such variation or extension being granted to the said contractor(s) or for any forbearance, act or omission on the part of the Employer or any indulgence by the Employer to the said contractor(s) or by any such matter or thing whatsoever which under the law relating to sureties would but for this provision have effect of so relieving us.

The Bank also agrees that the Employer at its option shall be entitled to enforce this Guarantee against the Bank as a principal debtor, in the first instance without proceeding against the Contractor and notwithstanding any security or other guarantee that the Employer may have in relation to the Contractor's liabilities.

This Guarantee shall not be determined or affected by liquidation or winding up, dissolution or change of constitution or insolvency of the Contractor but shall in all respects and for all purposes be binding and operative until payment of all money payable to the Employer in terms thereof. This guarantee will not be discharged due to the change in the constitution of the Bank or the Contractor(s).

We,……. BANK lastly undertake not to revoke this guarantee during its currency except with the previous consent of the Employer in writing.

Notwithstanding anything to the contrary contained hereinabove:

a) The liability of the Bank under this Guarantee shall not exceed…… [4]

b) This Guarantee shall be valid up to ……[5]

c) Unless the Bank is served a written claim or demand on or before _____[6] all rights under this guarantee shall be forfeited and the Bank shall be relieved and discharged from all liabilities under this guarantee irrespective of whether or not the original bank guarantee is returned to the Bank.

We, _____ Bank, have power to issue this Guarantee under law and the undersigned as a duly authorized person has full powers to sign this Guarantee on behalf of the Bank.

Date _____ Day of _____

for___(indicate the name of the Bank)__

(Signature of Authorised signatory)

[1] ADDRESS OF THE VENDOR /CONTRACTOR / SUPPLIER.

[2] DETAILS ABOUTTHE NOTICE OF AWARD/CONTRACTREFERENCE

[3] CONTRACT VALUE

[4] BG AMOUNTIN FIGURES AND WORDS

[5] VALIDITY DATE (At least 3 months more than completion period)

[6] DATE OF EXPIRY OF CLAIM PERIOD (At least 3 months more than the present date of validity of BG)

Notes:

1 The expiry of claim period shall be at least 3 months more than the validity date. It may be ensured that the same is in line with the agreement/ contract entered with the Vendor.

2 The BG should be on Non-Judicial Stamp paper/e-stamp paper of appropriate value as per Stamp Act prevailing in the State(s) where the BG is submitted or is to be acted upon or the rate

prevailing in the State where the BG was executed, whichever is higher. The Stamp Paper/e-stamp paper shall be purchased in the name of Vendor/Contractor/Supplier /Bank issuing the guarantee.

3 In Case of Bank Guarantees submitted by Foreign Vendors:

a) **From Nationalized/Public Sector / Private Sector/ Foreign Banks (BG issued by Branches in India)** can be accepted subject to the condition that the Bank Guarantee should be enforceable in the town/city or at nearest branch where the Unit is located i.e. Demand can be presented at the Branch located in the town/city or at nearest branch where the Unit is located.

b) **From Foreign Banks (wherein Foreign Vendors intend to provide BG from local branch of the Vendor country's Bank)**

b.1. In such cases, in the Tender Enquiry/ Contract itself, it may be clearly specified that Bank Guarantee issued by **any of the Consortium Banks only** will be accepted by BHEL. As such, Foreign Vendor needs to make necessary arrangements for issuance of Counter- Guarantee by Foreign Bank in favour of the Indian Bank's (BHEL's Consortium Bank) branch in India. It is advisable that all charges for issuance of Bank Guarantee/ counter- Guarantee should be borne by the Foreign Vendor. The tender stipulation should clearly specify these requirements.

b.2. In case, Foreign Vendors intend to provide BG from Overseas Branch of our Consortium Bank (e.g. if a BG is to be issued by SBI Frankfurt), the same is acceptable. However, the procedure at sl.no. b.1 will required to be followed.

PROFORMA OF BANK GUARANTEE (in lieu of EARNEST MONEY if permissible in NIT)

(On non-Judicial paper of appropriate value)

Bank Guarantee No…….

Date…….

To,

M/s Bharat Heavy Electricals Limited
Transmission Business Group (TBG)
PLOT NO. 25, SECTOR 16A, NOIDA,
DISTT. – GAUTAM BUDDH NAGAR,
U.P. – 201301

Dear Sirs,

In accordance with the terms and conditions of Invitation for Bids/Notice Inviting Tender No……[1](Tender Conditions), M/s ……. having its registered office at ……[2] (hereinafter referred to as the 'Tenderer'), is submitting its bid for the work of …… ……[3] invited by M/s Bharat Heavy Electricals Limited through its Unit at BHEL, Transmission Business Group, Noida.

The Tender Conditions provide that the Tenderer shall pay a sum of Rs ……. as Earnest Money Deposit in the form therein mentioned. The form of payment of Earnest Money Deposit includes Bank Guarantee executed by a Scheduled Bank.

In lieu of the stipulations contained in the aforesaid Tender Conditions that an irrevocable and unconditional Bank Guarantee against Earnest Money Deposit for an amount of Rs.....[4] is required to be submitted by the Tenderer as a condition precedent for participation in the said Tender and the Tenderer having approached us for giving the said Guarantee,

We, the……[Name & address of the Bank]

having our Registered Office at……(hereinafter referred to as the Bank) being the Guarantor under this Guarantee, hereby irrevocably and unconditionally undertake to forthwith and immediately pay to the Employer without any demur, merely on your first demand any sum or sums of Rs. .....[4] (in words Rupees.....) without any reservation, protest, and recourse and without the beneficiary needing to prove or demonstrate reasons for its such demand.

Any such demand made on the Bank shall be conclusive as regards the amount due and payable by the Bank under this guarantee. However, our liability under this guarantee shall be restricted to an amount not exceeding Rs._____.

We undertake to pay to the Employer any money so demanded notwithstanding any dispute or disputes raised by the Vendor/Contractor/Supplier in any suit or proceeding pending before any Court or Tribunal, Arbitrator or any other authority, our liability under this present being absolute and unequivocal.

The payment so made by us under this Guarantee shall be a valid discharge of our liability for payment hereunder and the Tenderer shall have no claim against us for making such payment.

We …….. Bank further agree that the Employer shall have the fullest liberty without our consent and without affecting in any manner our obligations hereunder to vary any of the terms and conditions of the said Tender or to extend the time of submission of from time to time or to postpone for any time or from time to time any of the powers exercisable by the Employer against the said Tenderer and we shall not be relieved from our liability by reason of any such variation, or extension being granted to the said Tenderer or for any forbearance, act or omission on the part of the Employer or any indulgence by the Employer to the said Tenderer or by any such matter or thing whatsoever which under the law relating to sureties would but for this provision have effect of so relieving us.

The Bank also agrees that the Employer at its option shall be entitled to enforce this Guarantee against the Bank as a principal debtor, in the first instance without proceeding against the Tenderer and notwithstanding any security or other guarantee that the Employer may have in relation to the Tenderer's liabilities.

This Guarantee shall be irrevocable and shall remain in force upto and including……..[5] and shall be extended from time to time for such period as may be desired by the Employer.

This Guarantee shall not be determined or affected by liquidation or winding up, dissolution or change of constitution or insolvency of the Tenderer but shall in all respects and for all purposes be binding and operative until payment of all money payable to the Employer in terms hereof. However, unless a demand or claim under this Guarantee is made on us in writing on or before the …… [6] we shall be discharged from all liabilities under this Guarantee.

We, …… Bank lastly undertake not to revoke this guarantee during its currency except with the previous consent of the Employer in writing.

Notwithstanding anything to the contrary contained hereinabove:

a) The liability of the Bank under this Guarantee shall not exceed……..[4]

b) This Guarantee shall be valid up to ……[5]

c) Unless the Bank is served a written claim or demand on or before _____[6] all rights under this guarantee shall be forfeited and the Bank shall be relieved and discharged from all liabilities under this guarantee irrespective of whether or not the original bank guarantee is returned to the Bank.

We, _____ Bank, have power to issue this Guarantee under law and the undersigned as a duly authorized person has full powers to sign this Guarantee on behalf of the Bank.

For and on behalf of

(Name of the Bank)

Date…….

Place of Issue…….

1 Details of the Invitation to Bid/Notice Inviting Tender
2 Name and Address of the Tenderer
3 Details of the Work
4 BG Amount in words and Figures
5 Validity Date (At least six months from date of tender opening)
6 Date of Expiry of Claim Period (At least 3 months more than the present date of validity of BG)

Note:

1 The Bank Guarantee should be valid for at least six months from date of tender opening. The expiry of claim period shall be at least 3 months more than the validity date. It may be ensured that the same is in line with the agreement/ contract entered with the Vendor.

2 The BG should be on Non-Judicial Stamp paper/e-stamp paper of appropriate value as per Stamp Act prevailing in the State(s) where the BG is submitted or is to be acted upon or the rate prevailing in the State where the BG was executed, whichever is higher. The Stamp Paper/e-stamp paper shall be purchased in the name of Vendor/Contractor/Supplier /Bank issuing the guarantee.

3 **In Case of Bank Guarantees submitted by Foreign Vendors-.**

a. **From Nationalized / Public Sector / Private Sector/ Foreign Banks (BG issued by Branches in India)** can be accepted subject to the condition that the Bank Guarantee should be enforceable in the town/city or at nearest branch where the Unit is located i.e. Demand can be presented at the Branch located in the town/city or at nearest branch where the Unit is located.

b. From Foreign Banks (wherein Foreign Vendors intend to provide BG from local branch of the Vendor country's Bank)

b.1 In such cases, in the Tender Enquiry/ Contract itself, it may be clearly specified that Bank Guarantee issued by **any of the Consortium Banks only** will be accepted by BHEL. As such, Foreign Vendor needs to make necessary arrangements for issuance of Counter- Guarantee by Foreign Bank in favour of the Indian Bank's (BHEL's Consortium Bank) branch in India. It is advisable that all charges for issuance of Bank Guarantee/ counter- Guarantee should be borne by the Foreign Vendor. The tender stipulation should clearly specify these requirements.

b.2 In case, Foreign Vendors intend to provide BG from Overseas Branch of our Consortium Bank (e.g. if a BG is to be issued by SBI Frankfurt), the same is acceptable. However, the procedure **at sl.no. b.1** will required to be followed.

b.3 The BG issued may preferably be subject to Uniform Rules for Demand Guarantees (URDG) 758 (as amended from time to time). The BG Format provided to them should clearly specify the same.

ANNEXURE TO MODEL CONCILIATION CLAUSE FOR CONDUCT OF CONCILIATION UNDER THE BHEL CONCILIATION SCHEME, 2018

BRIEF PROCEDURE FOR CONDUCT OF CONCILIATION PROCEEDINGS

1. The proceedings of Conciliation shall broadly be governed by Part-III of the Arbitration and Conciliation Act 1996 or any statutory modification thereof and as provided herein:

2. The party desirous of resorting to Conciliation shall send an invitation/notice in writing to the other party to conciliate specifying all points of Disputes with details of the amount claimed. The party concerned shall not raise any new issue thereafter. Parties shall also not claim any interest on claims/counter-claims from the date of notice invoking Conciliation till the conclusion of the Conciliation proceedings.

3. The party receiving the invitation/notice for Conciliation shall within 30 days of receipt of the notice of Conciliation intimate its consent for Conciliation along with its counter-claims, if any.

4. The Conciliation in a matter involving claim or counter-claim (whichever is higher) up to Rs 5 crores shall be carried out by sole Conciliator nominated by BHEL while in a matter involving claim or counter-claim (whichever is higher) of more than Rs 5 crores Conciliation shall be carried out by 3 Conciliators nominated by BHEL.

5. The Parties shall be represented by only their duly authorized in-house executives/officers and neither Party shall be represented by a Lawyer.

6. The first meeting of the IEC shall be convened by the IEC by sending appropriate communication/notice to both the parties as soon as possible but not later than 30 days from the date of his/their appointment. The hearings in the Conciliation proceeding shall ordinarily be concluded within two (2) months and, in exceptional cases where parties have expressed willingness to settle the matter or there exists possibility of settlement in the matter, the proceedings may be extended by the IEC by a maximum of further 2 months with the consent of the Parties subject to cogent reasons being recorded in writing.

7. The IEC shall thereafter formulate recommendations for settlement of the Disputes supported by reasons at the earliest but in any case within

15 days from the date of conclusion of the last hearing. The recommendations so formulated along with the reasons shall be furnished by the IEC to both the Parties at the earliest but in any case within 1 month from the date of conclusion of the last hearing.

8. Response/modifications/suggestions of the Parties on the recommendations of the IEC are to be submitted to the IEC within time limit stipulated by the IEC but not more than 15 days from the date of receipt of the recommendations from the IEC.

9. In the event, upon consideration, further review of the recommendations is considered necessary, whether by BHEL or by the other Party, then, the matter can be remitted back to the IEC with request to reconsider the same in light of the issues projected by either/both the Parties and to submit its recommendations thereon within the following 15 days from the date of remitting of the case by either of the Parties.

10. Upon the recommendations by the Parties, with or without modifications, as considered necessary, the IEC shall be called upon to draw up the Draft Settlement Agreement in terms of the recommendations.

11. When a consensus can be arrived at between the parties only in regard to any one or some of the issues referred for Conciliation the draft Settlement Agreement shall be accordingly formulated in regard to the said Issue(s), and the said Settlement Agreement, if signed, by the parties, shall be valid only for the said issues. As regards the balance issues not settled, the parties may seek to resolve them further as per terms and conditions provided in the contract.

12. In case no settlement can be reached between the parties, the IEC shall by a written declaration, pronounce that the Conciliation between the parties has failed and is accordingly terminated.

13. Unless the Conciliation proceedings are terminated in terms of para 22 (b), (c) & (d) herein below, the IEC shall forward his/its recommendations as to possible terms of settlement within one (1) month from the date of last hearing. The date of first hearing of Conciliation shall be the starting date for calculating the period of 2 months.

14. In case of 3 members IEC, 2 members of IEC present will constitute a valid quorum for IEC and meeting can take place to proceed in the matter after seeking consent from the member who is not available. If necessary, videoconferencing may be arranged for facilitating participation of the members. However, the IEC recommendations will be signed by all members. Where there is more than one (1) Conciliator, as a general rule they shall act jointly. In the event of differences between the Members of IEC, the decision/recommendations of the majority of the Members of IEC shall prevail and be construed as the recommendation of the IEC.

15. The Draft Settlement Agreement prepared by the IEC in terms of the consensus arrived at during the Conciliation proceedings between the Parties shall be given by the IEC to both the parties for putting up for approval of their respective Competent Authority.

16. Before submitting the draft settlement agreement to BHEL's Competent Authority viz. the Board Level Committee on Alternative Dispute Resolution (BLCADR) for approval, concurrence of the other party's Competent Authority to the draft settlement agreement shall be obtained by the other party and informed to BHEL within 15 days of receipt of the final draft settlement agreement by it. Upon approval by the Competent Authority, the Settlement Agreement would thereafter be signed by the authorized representatives of both the Parties and authenticated by the members of the IEC.

17. In case the Draft Settlement Agreement is rejected by the Competent Authority of BHEL or the other Party, the Conciliation proceedings would stand terminated.

18. A Settlement Agreement shall contain a statement to the effect that each of the person(s) signing thereto (i) is fully authorized by the respective Party(ies) he/she represents, (ii) has fully understood the contents of the same and (iii) is signing on the same out of complete freewill and consent, without any pressure, undue influence.

19. The Settlement Agreement shall thereafter have the same legal status and effect as an arbitration award on agreed terms on the substance of the dispute rendered by an arbitral tribunal passed under section 30 of the Arbitration and Conciliation Act, 1996.

20. Acceptance of the Draft Settlement Agreement/recommendations of the Conciliator and/or signing of the Settlement Agreement by BHEL shall

however, be subject to withdrawal/closure of any arbitral and/or judicial proceedings initiated by the concerned Party in regard to such settled issues.

21. Unless otherwise provided for in the agreement, contract or the Memorandum of Understanding, as the case may be, in the event of likelihood of prolonged absence of the Conciliator or any member of IEC, for any reason/incapacity, the Competent Authority/Head of Unit/Division/Region/Business Group of BHEL may substitute the Conciliator or such member at any stage of the proceedings. Upon appointment of the substitute Conciliator(s), such reconstituted IEC may, with the consent of the Parties, proceed with further Conciliation into the matter either de-novo or from the stage already reached by the previous IEC before the substitution.

22. The proceedings of Conciliation under this Scheme may be terminated as follows:
    a. On the date of signing of the Settlement agreement by the Parties; or,
    b. By a written declaration of the IEC, after consultation with the parties, to the effect that further efforts at conciliation are no longer justified, on the date of the declaration; or,
    c. By a written declaration of the Parties addressed to the IEC to the effect that the Conciliation proceedings are terminated, on the date of the declaration; or,
    d. By a written declaration of a Party to the other Party and the IEC, if appointed, to the effect that the Conciliation proceedings are terminated, on the date of the declaration.
    e. On rejection of the Draft Settlement Agreement by the Competent Authority of BHEL or the other Party.

23. The Conciliator(s) shall be entitled to following fees and facilities:

Sl No	**Particulars**	**Amount**
1	Sitting fees	Each Member shall be paid a Lump Sum fee of Rs 75,000/- for the whole case payable in terms of paragraph No. 27 herein below.
2	Towards drafting of settlement agreement	In cases involving claim and/or counter-claim of up to Rs 5crores. Rs 50,000/- (Sole Conciliator)

Sl No	Particulars	Amount
		In cases involving claim and/or counter-claim of exceeding Rs 5 crores but less than Rs 10 crores. Rs 75,000 (per Conciliator) In cases involving claim and/or counter-claim of more than Rs 10 crores. Rs 1,00,000/- (per Conciliator) Note: The aforesaid fees for the drafting of the Settlement Agreement shall be paid on Signing of the Settlement Agreement after approval of the Competent Authority or Rejection of the proposed Settlement Agreement by the Competent Authority of BHEL.
3	Secretarial expenses	Rs 10,000/- (one time) for the whole case for Conciliation by a Sole Member IEC. Where Conciliation is by multi member Conciliators –Rs 30,000/- (one time)- to be paid to the IEC
4	Travel and transportation and stay at outstation i) Retired Senior Officials of other Public Sector Undertakings (pay scale wise equivalent to or more than E-8 level of BHEL)	As per entitlement of the equivalent officer (pay scale wise) in BHEL.
	Others	As per the extant entitlement of whole time Functional Directors in BHEL.

Sl No	Particulars	Amount
		Ordinarily, the IEC Member(s) would be entitled to travel by air Economy Class.
5	Venue for meeting	Unless otherwise agreed in the agreement, contract or the Memorandum of Understanding, as the case may be, the venue/seat of proceedings shall be the location of the concerned Unit / Division / Region / Business Group of BHEL. Without prejudice to the seat/venue of the Conciliation being at the location of concerned BHEL Unit / Division / Region / Business Group, the IEC after consulting the Parties may decide to hold the proceedings at any other place/venue to facilitate the proceedings. Unless, Parties agree to conduct Conciliation at BHEL premises, the venue is to be arranged by either Party alternately.

24. The parties will bear their own costs including cost of presenting their cases/evidence/witness(es)/expert(s)on their behalf. The parties agree to rely upon documentary evidence in support of their claims and not to bring any oral evidence in IEC proceedings.

25. If any witness(es) or expert(s) is/are, with the consent of the parties, called upon to appear at the instance of the IEC in connection with the matter, then, the costs towards such witness(es)/expert(s) shall be determined by the IEC with the consent of the Parties and the cost so determined shall be borne equally by the Parties.

26. The other expenditures/costs in connection with the Conciliation proceedings as well as the IEC's fees and expenses shall be shared by the Parties equally.

27. Out of the lump sum fees of Rs 75,000/- for Sitting Fees, 50% shall be payable after the first meeting of the IEC and the remaining 50% of the Sitting Fees shall be payable only after termination of the conciliation proceedings in terms of para 22 hereinabove.

28. The travelling, transportation and stay at outstation shall be arranged by concerned Unit as per entitlements as per Serial No. 3 of the Table at para 23 above, and in case such arrangements are not made by the BHEL Unit, the same shall be reimbursed to the IEC on actuals limited to their entitlement as per Serial No. 4 of the Table at Para 23 above against supporting documents. The IEC Member(s) shall submit necessary invoice for claiming the fees/reimbursements.

29. The Parties shall keep confidential all matters relating to the conciliation proceedings. Confidentiality shall extend also to the settlement agreement, except where its disclosure is necessary for purposes of its implementation and enforcement or as required by or under a law or as per directions of a Court/Governmental authority/ regulatory body, as the case may be.

30. The Parties shall not rely upon or introduce as evidence in any further arbitral or judicial proceedings, whether or not such proceedings relate to the Disputes that is the subject of the Conciliation proceedings:
    a. Views expressed or suggestions made by the other party in respect of a possible settlement of the Disputes;
    b. admissions made by the other party in the course of the Conciliator proceedings;
    c. proposals made by the Conciliator;
    d. The fact that the other Party had indicated his willingness to accept a proposal for settlement made by the Conciliator.

31. The Parties shall not present the Conciliator(s) as witness in any Alternative Dispute Resolution or Judicial proceedings in respect of a Disputes that is/was the subject of that particular Conciliation proceeding.

32. None of the Conciliators shall act as an arbitrator or as a representative or counsel of a Party in any arbitral or judicial proceeding in respect of a Disputes that is/was the subject of that particular Conciliation proceeding.

33. The Parties shall not initiate, during the Conciliation proceedings, any arbitral or judicial proceedings in respect of a Disputes that is the subject matter of the Conciliation proceedings except that a Party may initiate arbitral or judicial proceedings where, in his opinion, such proceedings are necessary for preserving his rights including for preventing expiry of period of limitation. Unless terminated as per the provisions of this Scheme, the Conciliation proceedings shall continue

notwithstanding the commencement of the arbitral or judicial proceedings and the arbitral or judicial proceedings shall be primarily for the purpose of preserving rights including preventing expiry of period of limitation.

34. The official language of Conciliation proceedings under this Scheme shall be English unless the Parties agree to some other language.

Format 2 to BHEL Conciliation Scheme, 2018

FORMAT FOR SEEKING CONSENT FOR REFERRING THE DISPUTES TO CONCILIATION THROUGH IEC

To,

M/s. (Stakeholder's name)

Sub: Resolution of the Disputes through conciliation by Independent Expert Committee (IEC).

Ref: Contract No/MoU/Agreement/LOI/LOA& date _____.

Sir,

With reference to above referred Contract/MoU/Agreement/LOI/LOA, you have raised certain Disputes/claims. Vide your letter dated____ you have requested BHEL to refer the Disputes/claims to IEC for Conciliation.

We are enclosing herewith Format (3) for giving consent and the terms and conditions of BHEL Conciliation Scheme, 2018 governing conciliation through IEC. You are requested to give your unconditional consent to the said terms and conditions of the Scheme by returning the same duly sealed and signed on each page. On receipt of your consent, matter will be put to the Competent Authority for consideration and decision.

Please note that BHEL has also certain claims against you (if applicable). BHEL reserves its right to agree or not to agree conciliation of the said disputes through BHEL and this letter is being issued without prejudice to BHEL's rights and contentions available under the contract and law.

Yours faithfully,

Representative of BHEL

Format 3 to BHEL Conciliation Scheme, 2018

FORMAT FOR GIVING CONSENT BY CONTRACTOR/VENDOR/CUSTOMER/COLLABORATOR/CONSORTIUM PARTNERSFOR REFERRING THE DISPUTES TO CONCILIATION THROUGH IEC

To,

BHEL

.....

Sub: Resolution of Disputes through Conciliation by Independent Expert Committee (IEC).

Ref: Contract/MoU/Agreement/LOI/LOA No & date____

With reference to above referred contract, our following bills/invoices/claims submitted to BHEL are still unpaid giving rise to Disputes:

SL. no.	Claim Description	Bill submitted to BHEL (no. and date)	Amount of the bill/claim	Amount received from BHEL	Outstanding Amount

Accordingly we request you to kindly refer the Disputes in respect of above claims to IEC for Conciliation.

We hereby agree and give our unconditional consent to the terms and conditions of BHEL Conciliation Scheme, 2018 governing conciliation through IEC. We have signed the same on each page and enclosed it for your consideration.

Yours faithfully,

(Signature with stamp)

Authorized Representative of Contractor
Name, with designation
Date

Format 5 to BHEL Conciliation Scheme, 2018

STATEMENT OF CLAIMS/COUNTER CLAIMS TO BE SUBMITTED TO THE IEC BY BOTH THE PARTIES

1. Chronology of the Disputes

2. Brief of the Contract/MoU/Agreement/LOI/LOA

3. Brief history of the Disputes:

4. Issues:

5. Details of Clam(s)/Counter Claim(s):

Sl. No.	**Description of claim(s)/Counter Claim**	**Amount (in INR)Or currency applicable in the contract**	**Relevant contract clause**

6. Basis/Ground of claim(s)/counter claim(s) (along with relevant clause of contract)

Note– *The Statement of Claims/Counter Claims may ideally be restricted to maximum limit of 20 pages. Relevant documents may be compiled and submitted along with the statement of Claims/Counter Claims. The statement of Claims/Counter Claims is to be submitted to all IEC members and to the other party by post as well as by email.*

BILL OF QUANTITY CUM PRICE SCHEDULE (ANNEXURE-I)

Name of Project: 400kV SWITCHYARD AT OPTCL DUBRI, PARADIP

Name of Work: CONSTRUCTION OF TOWER & EQUIPMENTS FOUNDATIONS, PANEL ROOM, REACTOR, ROAD, TRENCH, DRAIN, METAL SPREADING, FENCE & GATE, OPEN STORE & EARTHING WORKS ETC. OF 400 KV SWITCHYARD AT OPTCL DUBRI PARADIP IN ODISHA

Tender Spec. No.: TBSM/OPTCL-DUBRI/CIVIL/TENDER/23-24, Date: 06.06.2023

S. No.	Description of Item	Quantity	Unit	Unit Rate	Amount
1	Clearing jungle including uprooting of rank vegetation, grass, brush wood, trees and saplings of girth up to 30 cm measured at a height of 1 m above ground level and removal of rubbish up to a distance of 50 m outside the periphery of the area cleared.	10800	sqm	₹ 7.20	₹ 77,760.00
2	Clearing grass and removal of the rubbish up to a distance of 50 m outside the periphery of the area cleared.	7200	sqm	₹ 3.65	₹ 26,280.00
3	Earthwork in excavation of ordinary soil, loading, unloading, transportation, levelling in low lying areas, watering and consolidation in required thickness with power roller **within sub-station premises** including cost of labour, lead, lift, T&P, etc., complete as per standard specification. (Note:- Only quantity of earthwork in cutting/ excavation shall be measured for payment purpose.)	100	cum	₹ 245.94	₹ 24,594.00
4	Loading, unloading, transporting and levelling of the available excavated earth in the low lying area, watering and consolidation in required thickness with power roller **within sub-station premises** including cost of labour, lead, lift, T&P, etc., complete as per standard specification. (Note:- Only quantity of earthwork in filling after compaction shall be measured for payment purpose)	50	cum	₹ 119.99	₹ 5,999.50
5	Supplying, spreading, compaction & watering of good earth in required thickness as per direction of officer-in-charge including royalty and carriage of upto 5 km complete. (Note:- Only quantity of earthwork in filling after compaction shall be measured for payment purpose)	3000	cum	₹ 301.00	₹ 9,03,000.00
6	Earthwork in excavation by mechanical means (Hydraulic excavator)/ manual means over areas (exceeding 30cm in depth 1.5m in width as well as 10sqm on plan) including dewatering as necessary of rain water/ subsoil seepage water and disposal of excavated earth upto 100m and lift upto 3.50m, disposed earth to be levelled and neatly dressed: Soft/Loose Soil.	3400	cum	₹ 113.36	₹ 3,85,424.00
7	Earthwork in excavation by mechanical means (Hydraulic excavator)/ manual means over areas (exceeding 30cm in depth 1.5m in width as well as 10sqm on plan) including dewatering as necessary of rain water/ subsoil seepage water and disposal of excavated earth upto 100m and lift upto 3.50m, disposed earth to be levelled and neatly dressed: Hard/Dense Soil.	2000	cum	₹ 125.95	₹ 2,51,900.00
8	Earthwork in excavation by mechanical means (Hydraulic excavator)/ manual means over areas (exceeding 30cm in depth 1.5m in width as well as 10sqm on plan) including dewatering as necessary of rain water/ subsoil seepage water and disposal of excavated earth upto 100m and lift upto 3.50m, disposed earth to be levelled and neatly dressed: Muddy Soil.	1300	cum	₹ 138.55	₹ 1,80,115.00
9	Earthwork in excavation by mechanical means (Hydraulic excavator)/ manual means over areas (exceeding 30cm in depth 1.5m in width as well as 10sqm on plan) including dewatering as necessary of rain water/ subsoil seepage water and disposal of excavated earth upto 100m and lift upto 3.50m, disposed earth to be levelled and neatly dressed: Soft/Disintegrated Rock (not requiring blasting).	100	cum	₹ 221.05	₹ 22,105.00
10	Earthwork in excavation by mechanical means (Hydraulic excavator)/ manual means over areas (exceeding 30cm in depth 1.5m in width as well as 10sqm on plan) including dewatering as necessary of rain water/ subsoil seepage water and disposal of excavated earth upto 100m and lift upto 3.50m, disposed earth to be levelled and neatly dressed: Hard Rock (requiring blasting/using breaker machinery).	50	cum	₹ 389.80	₹ 19,490.00
11	Earthwork in excavation by mechanical means (Hydraulic excavator)/ manual means in foundation trenches or drains (not exceeding 1.5m in width as well as 10sqm on plan) including dewatering as necessary of rain water/ subsoil seepage water and dressing of sides and ramming of bottoms, lift upto 3.50m, including getting out the excavated soil and disposal of surplus excavated soil as directed, within a lead of 100m: Soft/Loose Soil.	940	cum	₹ 149.76	₹ 1,40,774.40
12	Earthwork in excavation by mechanical means (Hydraulic excavator)/ manual means in foundation trenches or drains (not exceeding 1.5m in width as well as 10sqm on plan) including dewatering as necessary of rain water/ subsoil seepage water and dressing of sides and ramming of bottoms, lift upto 3.50m, including getting out the excavated soil and disposal of surplus excavated soil as directed, within a lead of 100m: Hard/Dense Soil.	500	cum	₹ 166.40	₹ 83,200.00
13	Earthwork in excavation by mechanical means (Hydraulic excavator)/ manual means in foundation trenches or drains (not exceeding 1.5m in width as well as 10sqm on plan) including dewatering as necessary of rain water/ subsoil seepage water and dressing of sides and ramming of bottoms, lift upto 3.50m, including getting out the excavated soil and disposal of surplus excavated soil as directed, within a lead of 100m: Muddy Soil.	350	cum	₹ 183.04	₹ 64,064.00
14	Earthwork in excavation by mechanical means (Hydraulic excavator)/ manual means in foundation trenches or drains (not exceeding 1.5m in width as well as 10sqm on plan) including dewatering as necessary of rain water/ subsoil seepage water and dressing of sides and ramming of bottoms, lift upto 3.50m, including getting out the excavated soil and disposal of surplus excavated soil as directed, within a lead of 100m: Soft/Disintegrated Rock (not requiring blasting).	50	cum	₹ 275.85	₹ 13,792.50
15	Earthwork in excavation by mechanical means (Hydraulic excavator)/ manual means in foundation trenches or drains (not exceeding 1.5m in width as well as 10sqm on plan) including dewatering as necessary of rain water/ subsoil seepage water and dressing of sides and ramming of bottoms, lift upto 3.50m, including getting out the excavated soil and disposal of surplus excavated soil as directed, within a lead of 100m: Hard Rock (requiring blasting/using breaker machinery).	50	cum	₹ 466.05	₹ 23,302.50
16	Extra for every additional lift of 1.5 m or part thereof beyond 3.50m in excavation / banking/filling excavated or stacked materials - All kinds of soil	20	cum	₹ 51.75	₹ 1,035.00
17	Filling available excavated earth (including rock) in trenches, plinth, sides of foundations, etc., in layers not exceeding 20cm in depth, consolidating each deposited layer by ramming and watering, lead upto 100m and lift upto 3.50m.	4180	cum	₹ 125.75	₹ 5,25,635.00
18	Carriage & disposal of surplus excavated earth/rock beyond initial lead by mechanical means not necessarily all the times on pucca roads, including loading, unloading, dressing of excavated material, etc., complete as per specifications -Lead upto 1 km.	3500	cum	₹ 98.34	₹ 3,44,190.00
19	Carriage & disposal of surplus excavated earth/rock beyond initial lead by mechanical means not necessarily all the times on pucca roads, including loading, unloading, dressing of excavated material, etc., complete as per specifications -Lead upto 3 km.	600	cum	₹ 124.51	₹ 74,706.00
20	Carriage & disposal of surplus excavated earth/rock beyond initial lead by mechanical means not necessarily all the times on pucca roads, including loading, unloading, dressing of excavated material, etc., complete as per specifications -. Lead upto 5 km.	50	cum	₹ 149.17	₹ 7,458.50

BILL OF QUANTITY CUM PRICE SCHEDULE (ANNEXURE-I)

Name of Project: 400kV SWITCHYARD AT OPTCL DUBRI, PARADIP

Name of Work: CONSTRUCTION OF TOWER & EQUIPMENTS FOUNDATIONS, PANEL ROOM, REACTOR, ROAD, TRENCH, DRAIN, METAL SPREADING, FENCE & GATE, OPEN STORE & EARTHING WORKS ETC. OF 400 KV SWITCHYARD AT OPTCL DUBRI PARADIP IN ODISHA

Tender Spec. No.: TBSM/OPTCL-DUBRI/CIVIL/TENDER/23-24, Date: 06.06.2023

S. No.	Description of Item	Quantity	Unit	Unit Rate	Amount
21	Supplying and filling in plinth with Jamuna/ local sand under floors including watering, ramming, consolidating and dressing complete.	10	cum	₹ 810.82	₹ 8,108.20
22	Supplying chemical emulsion in sealed containers including delivery as specified. Chloropyriphos emulsifiable concentrate of 20%	200	litre	₹ 157.45	₹ 31,490.00
23	Diluting & injecting chemical emulsion for PRE-CONSTRUCTIONAL ANTI-TERMITE treatment and creating a continuous chemical barrier under and all around the column pits, wall trenches, basement excavation, top surface of plinth filling, junction of wall & floor, along the external perimeter of building, expansion joints, over the top surface of consolidated earth on which apron is to be laid , surroundings of pipes and conduits, etc complete as per specifications (Plinth area of the building at ground floor only shall be measured for payment)	50	sqm	₹ 131.90	₹ 6,595.00
24	Providing and laying in position cement concrete of specified grade excluding the cost of centering and shuttering - All work upto plinth level. '1:2:4 (1 cement : 2 coarse sand : 4 graded stone aggregate 20mm nominal size)	50	cum	₹ 4,943.80	₹ 2,47,190.00
25	Providing and laying in position cement concrete of specified grade excluding the cost of centering and shuttering - All work upto plinth level. '1:3:6 (1 cement : 3 coarse sand : 6 graded stone aggregate **20mm** nominal size)	335	cum	₹ 4,522.52	₹ 15,15,044.20
26	Providing and laying in position cement concrete of specified grade excluding the cost of centering and shuttering - All work upto plinth level. '1:3:6 (1 cement : 3 coarse sand : 6 graded stone aggregate **40mm** nominal size)	10	cum	₹ 4,415.45	₹ 44,154.50
27	Providing and laying in position cement concrete of specified grade excluding the cost of centering and shuttering - All work upto plinth level. 1:4:8 (1 cement : 4 coarse sand : 8 graded stone aggregate **40mm** nominal size)	1500	cum	₹ 4,148.54	₹ 62,22,810.00
28	Providing and laying damp proof course 50mm thick cement concrete 1:1.5:3 (1 Cement:1.5 coarse sand : 3 graded stone aggregate 10 mm nominal size) .	10	sqm	₹ 310.14	₹ 3,101.40
29	Extra for providing and mixing water proofing material like "Plastocrete Super" or approved equivalent make in cement concrete work all complete as per specification and instruction of Engineer in Charge	1000	per 50kg cement	₹ 41.73	₹ 41,730.00
30	Applying a coat of residual petroleum bitumen of penetration 80/100 of approved quality using 1.7 kg per sqm on damp proof course & foundation surface, etc. after cleaning the surface with brushes and finally with a piece of cloth lightly soaked in kerosene oil.	10	sqm	₹ 88.05	₹ 880.50
31	Making plinth protection 50mm thick of cement concrete 1:2:4 (1 cement : 2 coarse sand : 4 graded stone aggregate 20 mm nominal size) over 75mm thick bed of dry brick ballast 40 mm nominal size, well rammed and consolidated and grouted with fine sand, including necessary excavation, levelling & dressing & finishing the top smooth.	25	sqm	₹ 426.82	₹ 10,670.50
32	Providing and laying in position machine mixed nominal mix 1:1.5:3 (1 cement : 1.5 coarse sand (zone-III): 3 graded stone aggregate 20 mm nominal size) cement concrete for reinforced cement concrete work including pumping of concrete to site of laying but excluding the cost of centering, shuttering, finishing and reinforcement, including admixtures in recommended proportions as per IS: 9103 to accelerate, retard setting of concrete, improve workability without impairing strength and durability as per direction of Engineer-in-charge. (Note :- Cement content shall be as per customer's technical specification): All works upto plinth level	2500	cum	₹ 5,570.21	₹ 1,39,25,525.00
33	Providing and laying in position machine mixed nominal mix 1:1.5:3 (1 cement : 1.5 coarse sand (zone-III): 3 graded stone aggregate 20 mm nominal size) cement concrete for reinforced cement concrete work including pumping of concrete to site of laying but excluding the cost of centering, shuttering, finishing and reinforcement, including admixtures in recommended proportions as per IS: 9103 to accelerate, retard setting of concrete, improve workability without impairing strength and durability as per direction of Engineer-in-charge. (Note :- Cement content shall be as per customer's technical specification): All works above plinth level upto terrace level	150	cum	₹ 6,501.16	₹ 9,75,174.00
34	Providing & fixing in position precast cement concrete trench covers or perforated covers wherever necessary at various elevations in all kinds of work including moulding, formwork, mixing, laying out, compacting and curing, storing, transportation, erection without damage, setting in position with cement and sand mortar, grouting etc all as per specs, drawings and directions of Engr-in-Charge but excluding the cost of reinforcement, inserts, edge angles, etc. Machine batched and machine mixed nominal mix1:1.5:3 (1 cement : 1.5 coarse sand (zone-III): 3 graded stone aggregate 20 mm nominal size). (Note :- Cement content shall be as per customer's technical specification).	60	cum	₹ 6,672.21	₹ 4,00,332.60
35	Centering and shuttering including strutting, propping, etc., and removal of form at all heights for Foundations, footings, bases of columns, etc., for mass concrete.	1200	sqm	₹ 184.42	₹ 2,21,304.00
36	Centering and shuttering including strutting, propping, etc., and removal of form at all heights for RCC walls at all levels (any thickness).	5800	sqm	₹ 369.24	₹ 21,41,592.00
37	Centering and shuttering including strutting, propping, etc., and removal of form at all heights for Suspended floors, roofs, landings, balconies and access platform	110	sqm	₹ 413.62	₹ 45,498.20
38	Centering and shuttering including strutting, propping, etc., and removal of form at all heights for Lintels, beams, plinth beams, girders, bressumers and cantilevers	70	sqm	₹ 333.23	₹ 23,326.10
39	Centering and shuttering including strutting, propping, etc., and removal of form at all heights for Columns, Pillars, Piers, Abutments, Posts and Struts	1730	sqm	₹ 454.41	₹ 7,86,129.30
40	Steel reinforcement-Cold twisted bars /TMT- Fe500/500D (To be procured from SAIL,TATA/TISCO, IISCO, RINL, JINDAL and customer approved Make/Source only). Including supply, straightning, cutting and bending, binding (i/c cost of binding wire), placing in position, etc., all labour & material, complete.	11000	kg	₹ 49.62	₹ 5,45,820.00
41	Steel reinforcement-Cold twisted bars /TMT- Fe500/500D. Excluding supply but including straightning, cutting, bending, binding (i/c cost of binding wire), placing in position, etc., all labour & material, complete. (Reinforcement steel shall be supplied by BHEL free of cost at site. Unloading, storing, watch & ward, handling & testing of material as per FQP is in the scope of the contractor)	200000	kg	₹ 11.00	₹ 22,00,000.00

BILL OF QUANTITY CUM PRICE SCHEDULE (ANNEXURE-I)

Name of Project: 400kV SWITCHYARD AT OPTCL DUBRI, PARADIP

Name of Work: CONSTRUCTION OF TOWER & EQUIPMENTS FOUNDATIONS, PANEL ROOM, REACTOR, ROAD, TRENCH, DRAIN, METAL SPREADING, FENCE & GATE, OPEN STORE & EARTHING WORKS ETC. OF 400 KV SWITCHYARD AT OPTCL DUBRI PARADIP IN ODISHA

Tender Spec. No.: TBSM/OPTCL-DUBRI/CIVIL/TENDER/23-24, Date: 06.06.2023

S. No.	Description of Item	Quantity	Unit	Unit Rate	Amount
42	Structural steelwork welded in built up sections like edge protection angles,insert plates with lugs & framed work including providing, cutting, hoisting, fixing in position/ embedding in concrete and applying a priming coat of approved steel primer all complete.	33000	kg	₹ 51.36	₹ 16,94,880.00
43	Steelwork welded in built up sections/framed work including providing, cutting, hoisting, fixing in position and applying a priming coat of approved steel primer using structural steel etc., as required. In covering of floors/trenches inside the buildings with chequered plates, stringers, treads, landings etc of staircases involving use of chequered plates, wherever required, all complete.	3500	kg	₹ 56.66	₹ 1,98,310.00
44	Steelwork welded in built up sections/framed work including providing, cutting, hoisting, fixing in position and applying a priming coat of approved steel primer using structural steel, etc., as required. In gratings, rails, mono rails, frames, ladders, stair railings, gates (including pipe), gantry girder (beams, channels, etc), grills and similar works.	22000	kg	₹ 78.07	₹ 17,17,540.00
45	Extra for providing galvanisation in the structural steel work. (Mass of zinc coating = 610gms/sqm). Cost of supply, fabrication, erection etc. of steel will be paid in respective items however black weight of the steel galvanised shall be measured for payment.	35000	kg	₹ 17.33	₹ 6,06,550.00
46	Brick work with common burnt clay F.P.S. (non modular) bricks of class designation 7.5 in foundation and plinth in: Cement mortar 1:5 (1 cement : 5 coarse sand)	20	cum	₹ 4,610.85	₹ 92,217.00
47	Brick work with common burnt clay F.P.S. (non modular) bricks of class designation 7.5 in superstructure above plinth level up to floor V level in all shapes and sizes in : Cement mortar 1:5 (1 cement : 5 coarse sand)	20	cum	₹ 5,442.03	₹ 1,08,840.60
48	Brick work with flyash F.P.S. (non modular) brick of class designation 7.5 in superstructure above plinth level up to floor five level in : Cement mortar 1:5 (1 cement : 5 coarse sand)	5	cum	₹ 4,899.06	₹ 24,495.30
49	Brick work with flyash F.P.S. (non modular) brick of class designation 7.5 in superstructure above plinth level up to floor five level in : Cement mortar 1:6 (1 cement : 6 coarse sand)	5	cum	₹ 4,812.28	₹ 24,061.40
50	Half brick masonry with non modular bricks of class designation 7.5 in foundation and plinth in: Cement mortar 1:4 (1 cement : 4 coarse sand)	10	sqm	₹ 562.70	₹ 5,627.00
51	Half brick masonry with non modular bricks of class designation 7.5 in superstructure above plinth upto floor V level: Cement mortar 1:4 (1 cement : 4 coarse sand)	10	sqm	₹ 653.36	₹ 6,533.60
52	Extra for providing and placing in position 2 Nos 6mm dia. M.S. bars at every fourth course of half brick masonry.	10	sqm	₹ 48.21	₹ 482.10
53	Cutting holes of required size in brick masonry wall for fixing of exhaust fan including providing and fixing 300 mm dia PVC pipe conforming BIS-12818 and making good the same etc. complete as per direction of Engineer-in-charge.	2	each	₹ 138.40	₹ 276.80
54	Providing & fixing chicken wire mesh in plaster all complete as per specification and direction of Engineer - in - charge.	270	sqm	₹ 42.00	₹ 11,340.00
55	12mm cement plaster on the even/smooth side of the internal walls in the mix: 1:6 (1cement :6 fine sand)	90	sqm	₹ 154.72	₹ 13,924.80
56	15mm cement plaster on rough side of the single or half brick walls in the mix: 1:6 (1cement :6 fine sand)	10	sqm	₹ 178.47	₹ 1,784.70
57	18mm cement external (or rough side) plaster in two coats under layer 12 mm thick cement plaster 1:5 (1 cement : 5 coarse sand) finished with a top layer 6mm thick cement plaster 1:3 (1 cement : 3 coarse sand) finished rough with sponge.	100	sqm	₹ 259.23	₹ 25,923.00
58	6mm cement plaster to ceiling of mix. 1:3 (1 cement : 3 fine sand)	50	sqm	₹ 138.39	₹ 6,919.50
59	12 mm cement plaster of mix : 1:5 (1 cement: 5 fine sand)	5	sqm	₹ 159.72	₹ 798.60
60	18 mm cement plaster of mix : 1:4 (1 cement: 4 coarse sand)	5	sqm	₹ 219.19	₹ 1,095.95
61	25 mm cement plaster of mix : 1:4 (1 cement: 4 coarse sand)	5	sqm	₹ 298.76	₹ 1,493.80
62	Neat cement punning.	100	sqm	₹ 39.55	₹ 3,955.00
63	Extra for providing and mixing water proofing material in cement plaster work in proportion recommended by the manufacturers	100	Per bag of 50 kg cement used in the mix	₹ 44.12	₹ 4,412.00
64	Cement plaster skirting (upto 15cm height) with cement mortar 1:3 (1cement: 3 coarse sand) mixed with metallic hardener in same ratio as for floor finished with a floating coat of neat cement: 21mm thick	10	sqm	₹ 191.89	₹ 1,918.93
65	Providing and laying vitrified floor tiles in different sizes (thickness to be specified by the manufacturer) with water absorption less than 0.08% and conforming to IS: 15622, of approved make, in all colours and shades, laid on 20mm thick cement mortar 1:4 (1 cement : 4 coarse sand), jointing with grey cement slurry @ 3.3kg/sqm including grouting the joints with white cement and matching pigments etc., complete: Size of Tile 500x500 mm	20	sqm	₹ 879.97	₹ 17,599.40
66	Providing and laying Polished Granite stone flooring in required design and patterns, in linear as well as curvilinear portions of the building, all complete as per the architectural drawings, with 13 mm thick stone slab over 20 mm (average) thick base of cement mortar 1:4 (1 cement : 4 coarse sand), laid and jointed with cement slurry and pointing with white cement slurry admixed with pigment of matching shade, including rubbing, curing and polishing etc. all complete as specified and as directed by the Engineer-in-Charge. Polished Granite stone slab jet Black, Cherry Red, Elite Brown, Cat Eye or equivalent.	5	sqm	₹ 1,848.91	₹ 9,244.55

BILL OF QUANTITY CUM PRICE SCHEDULE (ANNEXURE-I)

Name of Project: 400kV SWITCHYARD AT OPTCL DUBRI, PARADIP

Name of Work: CONSTRUCTION OF TOWER & EQUIPMENTS FOUNDATIONS, PANEL ROOM, REACTOR, ROAD, TRENCH, DRAIN, METAL SPREADING, FENCE & GATE, OPEN STORE & EARTHING WORKS ETC. OF 400 KV SWITCHYARD AT OPTCL DUBRI PARADIP IN ODISHA

Tender Spec. No.: TBSM/OPTCL-DUBRI/CIVIL/TENDER/23-24, Date: 06.06.2023

S. No.	Description of Item	Quantity	Unit	Unit Rate	Amount
67	Providing and laying Ceramic glazed floor tiles of size 300x300 mm (thickness to be specified by the manufacturer), of 1st quality conforming to IS:15622 of approved make in colours such as **White, Ivory, Grey, Fume Red Brown**, laid on 20 mm thick cement mortar 1:4 (1 Cement : 4 Coarse sand), jointing with grey cement slurry @ 3.3kg/sqm including pointing the joints with white cement and matching pigment etc., complete.	5	sqm	₹ 616.92	₹ 3,084.60
68	Providing and laying Ceramic glazed floor tiles of size 300x300 mm (thickness to be specified by the manufacturer), of 1st quality conforming to IS:15622, of approved make, in all colours, shades, **except White, Ivory, Grey, Fume Red Brown**, laid on 20 mm thick bed of cement mortar 1:4 (1 Cement : 4 Coarse sand), jointing with grey cement slurry @ 3.3kg/sqm including pointing the joints with white cement and matching pigments etc., complete.	5	sqm	₹ 663.96	₹ 3,319.80
69	Providing and fixing Ist quality ceramic glazed wall tiles conforming to IS: 15622 (thickness to be specified by the manufacturer), of approved make, in all colours, shades except burgundy, bottle green, black of any size as approved by Engineer-in-Charge, in skirting, risers of steps and dados, over 12 mm thick bed of cement mortar 1:3 (1 cement : 3 coarse sand) and jointing with grey cement slurry @ 3.3kg per sqm, including pointing in white cement mixed with pigment of matching shade complete.	125	sqm	₹ 676.81	₹ 84,601.25
70	Chequerred precast cement concrete tiles 22 mm thick in footpath & courtyard, jointed with neat cement slurry mixed with pigment to match the shade of tiles, including rubbing and cleaning etc. complete, on 20 mm thick bed of cement mortar 1:4 (1 cement: 4 coarse sand). Dark shade pigment using ordinary cement	50	sqm	₹ 622.99	₹ 31,149.50
71	Providing and applying 2 coats of plaster of paris putty/ punning (JK Birla / Bison Make) of minimum 2mm thickness over the plastered surfaces of walls/concrete to prepare the surface even and smooth complete including applying of sand paper to remove the undulation of the walls, etc. as per Technical Specification and direction of engineer-in-charge.	100	sqm	₹ 117.08	₹ 11,708.00
72	Providing and applying white cement based putty of average thickness 1 mm, of approved brand and manufacturer, over the plastered wall surface to prepare the surface even and smooth complete.	90	sqm	₹ 82.18	₹ 7,396.20
73	Plaster drip course /groove in plastered surface or moulding to RCC projections:	50	meter	₹ 34.15	₹ 1,707.50
74	White washing with lime to give an even shade New work (three or more coats)	10	sqm	₹ 16.97	₹ 169.70
75	Distempering with oil bound washable distemper of approved brand and manufacture to give an even shade : New work (two or more coats) over and including water thinnable priming coat with cement primer	5	sqm	₹ 91.81	₹ 459.05
76	Wall painting with plastic emulsion paint of approved brand and manufacture to give an even shade: Two or more coats on new work	35	sqm	₹ 78.95	₹ 2,763.25
77	Wall painting with acrylic emulsion paint, having VOC (Volatile Organic compound) content less than 50 grams/ litre, of approved brand and manufacture, including applying additional coats wherever required, to achieve even shade and colour. Two or more coats on new work	80	sqm	₹ 71.22	₹ 5,697.60
78	Applying priming coats with primer of approved brand and manufacture, having low VOC (Volatile Organic Compound) content. With water thinnable cement primer on wall surface having VOC content less than 50 grams/litre	25	sqm	₹ 36.27	₹ 906.75
79	Finishing walls with water proofing cement paint of required shade : New work (Two or more coats applied @ 3.84 kg/10 sqm)	50	sqm	₹ 56.21	₹ 2,810.50
80	Finishing walls with Acrylic Smooth exterior paint of required shade : New work (Two or more coat applied @ 1.67 ltr/10 sqm over and including priming coat of exterior primer applied @ 2.20 kg/10 sqm)	20	sqm	₹ 85.91	₹ 1,718.20
81	Painting with synthetic enamel paint of approved brand and manufacture to give an even shade: Two or more coats on new work.	10	sqm	₹ 74.91	₹ 749.10
82	Applying priming coat with ready mixed red oxide zinc chromate primer of approved brand and manufacture on steel galvanised iron/ steel works	10	sqm	₹ 28.47	₹ 284.70
83	Providing and fixing pressed steel door frames confirming to IS:4351 manufactured from commercial mild steel sheet of 1.25mm thickness including hinges, jamb, lock jamb, bead and if required angle threshold of mild steel angle of section 50X25mm, or base ties of 1.25mm pressed mild steel welded or rigidly fixed together by mechanical means, adjustable lugs with spit end tail to each jamb including steel butt hinges 2.5mm thick with mortar guards, lock strike plate and shock absorbers as specified and applying a coat of approved steel primer after pre-treatment of the surface as directed by Engineer-in-Charge: Profile C	7	metre	₹ 318.17	₹ 2,227.19
84	Providing & fixing 45mm steel door shutter made of double sheet 18G steel suitably reinforced with horizontal stiffners and filled with mineral wool, fixtures like handles, tower bolts, Aldrops,etc., all complete as per drawing and instruction of Engineer -in-Charge.	6	sqm	₹ 5,858.53	₹ 35,151.18
85	Providing and fixing factory made ISI marked steel glazed doors, windows and ventilators, side /top /centre hung, with beading and all members such as F7D, F4B, K11 B and K12 B etc. complete of standard rolled steel sections, joints mitred and flash butt welded and sash bars tenoned and riveted, including providing and fixing of hinges, pivots, including priming coat of approved steel primer, but excluding the cost of other fittings, complete all as per approved design, (sectional weight of only steel members shall be measured for payment). Fixing with 15x3 mm lugs 10 cm long embedded in cement concrete block 15x10x10 cm of C.C. 1:3:6 (1 Cement : 3 coarse sand : 6 graded stone aggregate 20 mm nominal size)	10	sqm	₹ 104.76	₹ 1,047.60
86	Providing and fixing circular/ Hexagonal cast iron or M.S. sheet box for ceiling fan clamp of internal dia 140mm, 73mm height, 3mm thick rim, top lid of 1.5mm thick M.S. sheet with its top surface hacked for proper bonding, top lid shall be screwed into the cast iron/ M.S. sheet box by means of 3.3 mm dia round headed screws, one lock at the corners. Clamp shall be made of 12 mm dia M.S. bar bent to shape as per standard drawing with over all length as 80cm.	2	each	₹ 115.08	₹ 230.16

BILL OF QUANTITY CUM PRICE SCHEDULE (ANNEXURE-I)

Name of Project: 400kV SWITCHYARD AT OPTCL DUBRI, PARADIP

Name of Work: CONSTRUCTION OF TOWER & EQUIPMENTS FOUNDATIONS, PANEL ROOM, REACTOR, ROAD, TRENCH, DRAIN, METAL SPREADING, FENCE & GATE, OPEN STORE & EARTHING WORKS ETC. OF 400 KV SWITCHYARD AT OPTCL DUBRI PARADIP IN ODISHA

Tender Spec. No.: TBSM/OPTCL-DUBRI/CIVIL/TENDER/23-24, Date: 06.06.2023

S. No.	Description of Item	Quantity	Unit	Unit Rate	Amount
87	Providing and fixing angle iron frames for doors, windows and ventilators of mild steel Angle sections of size 35x35x5 mm, joints mitred and welded by angle iron 35x35x5 mm or 35x5 mm flat pieces to the existing T-iron frame or to the wall with dash fastener, including fixing of necessary butt hinges and screws and applying a priming coat of approved steel primer, all complete as per the direction of Engineer-In-charge.	50	kg	₹ 58.95	₹ 2,947.54
88	Providing & fixing MS steel door shutter having frame of angle section of size 25x25x3 mm, one horizontal mullion of angle section of size 25x25x3 mm, two diagonals between frame & mullion members of 10mm square bars and 1.00mm thick steel sheet suitably welded including fixtures like handles, tower bolts, Aldrops, applying a priming coat of approved steel primer, etc., all complete as per drawing and instruction of Engineer -in-Charge.	25	kg	₹ 60.38	₹ 1,509.50
89	Providing and fixing M.S. grills of required pattern in frames of windows etc. with MS flats,square or round bars etc. including priming coat with approved steel primer all complete.all complete.	25	kg	₹ 104.57	₹ 2,614.25
90	Providing and fixing factory made uPVC white colour casement/casement cum fixed glazed windows comprising of uPVC multichambered frame, sash and mullion (where ever required) extruded profiles duly reinforced with 1.60 ± 0.2 mm thick galvanized mild steel section made from roll forming process of required length (shape & size according to uPVC profile), uPVC extruded glazing beads of appropriate dimension, EPDM gasket, stainless steel (SS 304 grade) friction hinges, zinc alloy (white powder coated) casement handles, G.I fasteners 100 x 8 mm size for fixing frame to finished wall, plastic packers, plastic caps and necessary stainless steel screws etc. Profile of frame & sash shall be mitred cut and fusion welded at all corners, mullion (if required) shall be also fusion welded including drilling of holes for fixing hardware's and drainage of water etc. After fixing frame the gap between frame and adjacent finished wall shall be filled with weather proof silicon sealant over backer rod of required size and of approved quality, all complete as per approved drawing & direction of Engineer-in-Charge. (Single / double glass panes and silicon sealant shall be paid separately) Casement window single panel with S.S. friction hinges (400 x 19 x 1.9 mm) made of (big series) frame 67 x 60 mm & sash 67 x 80 mm both having wall thickness of 2.3 ± 0.2 mm and single glazing bead / double glazing bead of appropriate dimension. (Area of window above 0.75 sqm.)	5	sqm	₹ 7,138.88	₹ 35,694.39
91	Providing and fixing factory made uPVC white colour casement/casement cum fixed glazed windows comprising of uPVC multichambered frame, sash and mullion (where ever required) extruded profiles duly reinforced with 1.60 ± 0.2 mm thick galvanized mild steel section made from roll forming process of required length (shape & size according to uPVC profile), uPVC extruded glazing beads of appropriate dimension, EPDM gasket, stainless steel (SS 304 grade) friction hinges, zinc alloy (white powder coated) casement handles, G.I fasteners 100 x 8 mm size for fixing frame to finished wall, plastic packers, plastic caps and necessary stainless steel screws etc. Profile of frame & sash shall be mitred cut and fusion welded at all corners, mullion (if required) shall be also fusion welded including drilling of holes for fixing hardware's and drainage of water etc. After fixing frame the gap between frame and adjacent finished wall shall be filled with weather proof silicon sealant over backer rod of required size and of approved quality, all complete as per approved drawing & direction of Engineer-in-Charge. (Single / double glass panes and silicon sealant shall be paid separately) Casement window double panels with S.S. friction hinges (350 x 19 x 1.9 mm) made of (big series) frame 67 x 60 mm & sash / mullion 67 x 80 mm both having wall thickness of 2.3 ± 0.2 mm and single glazing bead/ double glazing bead of appropriate dimension. (Area of window above 1.50 sqm).	10	sqm	₹ 7,323.02	₹ 73,230.20
92	Providing and fixing factory made uPVC white colour casement/ Casement cum fixed glazed door comprising of uPVC multichambered frame, sash and mullion (where ever required) extruded profiles duly reinforced with 1.60 ± 0.2 mm thick galvanized mild steel section made from roll forming process of required length (shape & size according to uPVC profile), uPVC extruded glazing beads of appropriate dimension, EPDM gasket, zinc alloy (white powder coated) 3D hinges and one handle on each side of panels along with zinc plated mild steel multi point locking having transmission gear, cylinder with keeps and one side key, G.I fasteners 100 x 8 mm size for fixing frame to finished wall and necessary stainless steel screws, etc. Profile of frame & sash shall be mitred cut and fusion welded at all corners, mullion (if required) shall be also fusion welded including drilling of holes for fixing hardware's and drainage of water etc. After fixing frame the gap between frame and adjacent finished wall shall be filled with weather proof silicon sealant over backer rod of required size and of approved quality, all complete as per approved drawing & direction of Engineer-in-Charge. (Single / double glass panes and silicon sealant shall be paid separately). Casement **door with 3D hinges made of (big series)** frame 67 x 64 mm & sash 67 x 110 mm both having wall thickness of 2.3 ± 0.2 mm and single glazing bead/ double glazing bead of appropriate dimension. (**Area of door upto 2.00 sqm**).	5	sqm	₹ 6,844.00	₹ 34,220.00
93	Providing and fixing factory made uPVC white colour sliding glazed window upto 1.50 m in height dimension comprising of uPVC multi-chambered frame with in-built roller track and sash extruded profiles duly reinforced with 1.60 ± 0.2 mm thick galvanized mild steel section made from roll forming process of required length (shape & size according to uPVC profile), appropriate dimension of uPVC extruded glazing beads and uPVC extruded interlocks, EPDM gasket, wool pile, zinc alloy (white powder coated) touch locks with hook, zinc alloy body with single nylon rollers (weight bearing capacity to be 40 kg), G.I fasteners 100 x 8 mm size for fixing frame to finished wall and necessary stainless steel screws etc. Profile of frame & sash shall be mitred cut and fusion welded at all corners, including drilling of holes for fixing hardware's and drainage of water etc. After fixing frame the gap between frame and adjacent finished wall shall be filled with weather proof silicon sealent over backer rod of required size and of approved quality, all complete as per approved drawing & direction of Engineer-in-Charge. (Single / double glass panes, wire mesh and silicon sealant shall be paid separately) **Two track two panels sliding window made of (small series)** frame 52 x 44 mm & sash 32 x 60 mm both having wall thickness of 1.9 ± 0.2 mm and single glazing bead of appropriate dimension. (**Area of window upto 1.75 sqm**)	5	sqm	₹ 4,943.00	₹ 24,715.00

BILL OF QUANTITY CUM PRICE SCHEDULE (ANNEXURE-I)

Name of Project: 400kV SWITCHYARD AT OPTCL DUBRI, PARADIP

Name of Work: CONSTRUCTION OF TOWER & EQUIPMENTS FOUNDATIONS, PANEL ROOM, REACTOR, ROAD, TRENCH, DRAIN, METAL SPREADING, FENCE & GATE, OPEN STORE & EARTHING WORKS ETC. OF 400 KV SWITCHYARD AT OPTCL DUBRI PARADIP IN ODISHA

Tender Spec. No.: TBSM/OPTCL-DUBRI/CIVIL/TENDER/23-24, Date: 06.06.2023

S. No.	Description of Item	Quantity	Unit	Unit Rate	Amount
94	Providing and fixing factory made uPVC white colour sliding glazed window above 1.50 m in height dimension comprising of uPVC multi-chambered frame with in-built roller track and sash extruded profiles duly reinforced with 1.60 ± 0.2 mm thick galvanized mild steel section made from roll forming process of required length (shape & size according to uPVC profile), appropriate dimension of uPVC extruded glazing beads, uPVC extruded interlocks and uPVC extruded Inline sash adaptor (if required), EPDM gasket, wool pile, zinc alloy (white powder coated) handle on one side of extreme panel along with zinc plated mild steel multi point locking having transmission gear with keeps, zinc alloy (white powder coated) touch lock with hook (if required for wire mesh panel), stainless steel (SS 304 grade) body with adjustable double nylon rollers (weight bearing capacity to be 120 kg), G.I fasteners 100 x 8 mm size for fixing frame to finished wall and necessary stainless steel screws etc. Profile of frame & sash shall be mitred cut and fusion welded at all corners, including drilling of holes for fixing hardware's and drainage of water etc. After fixing frame the gap between frame and adjacent finished wall shall be filled with weather proof silicon sealent over backer rod of required size and of approved quality, all complete as per approved drawing & direction of Engineer-in-Charge. (Single / double glass panes, wire mesh and silicon sealant shall be paid separately). Two track two panels sliding window made of (big series) frame 67 x 50 mm & sash 46 x 62 mm both having wall thickness of 2.3 ± 0.2 mm and single glazing bead / double glazing bead of appropriate dimension. (Area of window above 2.50 sqm upto 4.00 sqm.)	5	sqm	₹ 4,860.00	₹ 24,300.00
95	Providing and fixing aluminium work for doors, windows, ventilators and partitions with extruded built up standard tubular sections/appropriate Z sections and other sections of HINDALCO or approved equal make conforming to IS:733 and IS:1285 (anodised transparent or dyed to required shade according to IS: 1868, Minimum anodic coating of grade AC 15) including fixing with dash fasteners of required dia and size, including necessary filling up the gaps at junctions, i.e. at top, bottom and sides with required EPDM rubber/ neoprene gasket etc. Aluminium sections shall be smooth, rust free, straight, mitred and jointed mechanically wherever required including cleat angle, Aluminium snap beading for glazing / paneling, C.P. brass / stainless steel screws, all complete as per architectural drawings and the directions of Engineer-in-charge. (Glazing, paneling and dash fasteners to be paid for separately) : For fixed portion	25	kg	₹ 302.77	₹ 7,569.25
96	Providing and fixing aluminium work for doors, windows, ventilators and partitions with extruded built up standard tubular sections/appropriate Z sections and other sections of HINDALCO or approved equal make conforming to IS:733 and IS:1285 (anodised transparent or dyed to required shade according to IS: 1868, Minimum anodic coating of grade AC 15) including fixing with dash fasteners of required dia and size, including necessary filling up the gaps at junctions, i.e. at top, bottom and sides with required EPDM rubber/ neoprene gasket etc. Aluminium sections shall be smooth, rust free, straight, mitred and jointed mechanically wherever required including cleat angle, Aluminium snap beading for glazing / paneling, C.P. brass / stainless steel screws, all complete as per architectural drawings and the directions of Engineer-in-charge. (Glazing, paneling and dash fasteners to be paid for separately) : For shutters of doors, windows & ventilators including providing and fixing hinges/ pivots and making provision for fixing of fittings wherever required including the cost of EPDM rubber / neoprene gasket required (Fittings shall be paid for separately)	20	kg	₹ 366.04	₹ 7,320.80
97	Providing & fixing double glazed hermetically sealed glazing in aluminium/UPVC windows, ventilators and partitions, etc, with 6mm thick toughened safety glass conforming to IS: 2553. Inner glass shall be clear glass and outer glass shall be tinted heat reflecting with 10mm air gap including providing EPDM gasket, perforated aluminium spacers, dessicants, sealants (both primary & secondary sealant) etc. as per specifications, drawings & direction of Engineer-in-charge complete.	5	sqm	₹ 2,741.55	₹ 13,707.75
98	Providing and fixing 12 mm thick prelaminated particle board flat pressed three layer or graded wood particle board conforming to IS: 12823 Grade I Type II, in panelling fixed in aluminum doors, windows shutters and partition frames with C.P. brass / stainless steel screws etc. complete as per architectural drawings and directions of Engineer-in-charge. Pre-laminated particle board with decorative lamination on both sides	5	sqm	₹ 755.05	₹ 3,775.25
99	Providing and fixing 19mm thick Pre-laminated flat pressed 3 layer (medium density) particle board or graded wood particle board IS : 3087 marked, with one side decorative and other side balancing lamination Grade I, Type II exterior grade IS : 12823 marked, in shelves with screws and fittings wherever required, edges to be painted with polyurethane primer including fittings, etc.. One side decorative and other side balancing lamination Grade I	3	sqm	₹ 864.18	₹ 2,592.54
100	Providing and fixing glazing in aluminium/UPVC door, window, ventilator shutters and partitions etc. with EPDM rubber / neoprene gasket etc. complete as per the architectural drawings and the directions of Engineer-in-charge. (Cost of aluminium snap beading shall be paid in basic item): With float glass panes of 4 mm thickness.	4	sqm	₹ 664.04	₹ 2,656.16
101	Providing and fixing glazing in aluminium/UPVC door, window, ventilator shutters and partitions etc. with EPDM rubber / neoprene gasket etc. complete as per the architectural drawings and the directions of Engineer-in-charge. (Cost of aluminium snap beading shall be paid in basic item): With float glass panes of 6 mm thickness.	4	sqm	₹ 886.51	₹ 3,546.04
102	Providing and fixing glazing in aluminium/UPVC door, window, ventilator shutters and partitions etc. with EPDM rubber / neoprene gasket etc. complete as per the architectural drawings and the directions of Engineer-in-charge. (Cost of aluminium snap beading shall be paid in basic item):With toughened glass panes of 6 mm thickness.	2	sqm	₹ 1,239.41	₹ 2,478.82
103	Providing and fixing anodised aluminium grill (anodised transparent or dyed to required shade according to IS: 1868 with minimum anodic coating of grade AC 15) of approved design/pattern, with approved standard section and fixed to the existing window frame with C.P. brass/ stainless steel screws @ 200 mm centre to centre, including cutting the grill to proper opening size for fixing and operation of handles and fixing approved anodised aluminium standard section around the opening, all complete as per requirement and direction of Engineer-in-charge. (Only weight of grill to be measured for payment).	10	kg	₹ 355.37	₹ 3,553.70

BILL OF QUANTITY CUM PRICE SCHEDULE (ANNEXURE-I)

Name of Project: 400kV SWITCHYARD AT OPTCL DUBRI, PARADIP

Name of Work: CONSTRUCTION OF TOWER & EQUIPMENTS FOUNDATIONS, PANEL ROOM, REACTOR, ROAD, TRENCH, DRAIN, METAL SPREADING, FENCE & GATE, OPEN STORE & EARTHING WORKS ETC. OF 400 KV SWITCHYARD AT OPTCL DUBRI PARADIP IN ODISHA

Tender Spec. No.: TBSM/OPTCL-DUBRI/CIVIL/TENDER/23-24, Date: 06.06.2023

S. No.	Description of Item	Quantity	Unit	Unit Rate	Amount
104	Providing and fixing double action hydraulic floor spring of approved brand and manufacture conforming to IS : 6315, having brand logo embossed on the body / plate with double spring mechanism and door weight upto 125 kg, for doors, including cost of cutting floors, embedding in floors as required and making good the same matching to the existing floor finishing and cover plates with brass pivot and single piece M.S. sheet outer box with slide plate etc. complete as per the direction of Engineer-in-charge. With stainless steel cover plate minimum 1.25 mm thickness	2	each	₹ 1,777.08	₹ 3,554.16
105	Providing M.S. foot rests including fixing in manholes with 20x20x10 cm cement concrete blocks 1:3:6 (1 cement : 3 coarse sand : 6 graded stone aggregate 20 mm nominal size) as per standard design : With 20x20 mm square bar	8	each	₹ 250.61	₹ 2,004.88
106	Providing and fixing on wall face unplasticised Rigid PVC rain water pipes conforming to IS : 13592 Type A, including jointing with seal ring conforming to IS : 5382, leaving 10 mm gap for thermal expansion, (i) Single socketed pipes: 110 mm diameter.	20	meter	₹ 211.92	₹ 4,238.40
107	Providing and fixing on wall face unplasticised - PVC moulded fittings/ accessories for unplasticised Rigid PVC rain water pipes conforming to IS : 13592 Type A, including jointing with seal ring conforming to IS : 5382, leaving 10 mm gap for thermal expansion: Coupler - 110 mm	10	each	₹ 91.08	₹ 910.80
108	Providing and fixing on wall face unplasticised - PVC moulded fittings/ accessories for unplasticised Rigid PVC rain water pipes conforming to IS : 13592 Type A, including jointing with seal ring conforming to IS : 5382, leaving 10 mm gap for thermal expansion: Bend 87.5° - 110 mm	10	each	₹ 99.94	₹ 999.40
109	Providing and fixing on wall face unplasticised - PVC moulded fittings/ accessories for unplasticised Rigid PVC rain water pipes conforming to IS : 13592 Type A, including jointing with seal ring conforming to IS : 5382, leaving 10 mm gap for thermal expansion: Shoe (Plain) - 110 mm	5	each	₹ 87.15	₹ 435.75
110	Providing and fixing unplasticised-PVC pipe clips of approved design to unplasticised - PVC rain water pipes by means of 50x50x50 mm hard wood plugs, screwed with M.S. screws of required length, including cutting brick work and fixing in cement mortar 1:4 (1 cement : 4 coarse sand) and making good the wall etc. complete: 110 mm	10	each	₹ 175.15	₹ 1,751.50
111	Providing and fixing to the inlet mouth of rain water pipe cast iron grating 15 cm diameter and weighing not less than 440 grams.	4	each	₹ 35.89	₹ 143.56
112	Providing & fixing Aluminium Luxalon (Hunter Douglas) Make Techstyle panel type false ceiling system including T grid, fasteners & fixtures, materials, scaffolding, leaving cut-out, etc. all complete as per customer's technical specification clause no 15.15 & direction of Engineer-in -Charge.	40	sqm	₹ 2,666.19	₹ 1,06,647.60
113	Providing and fixing thermal insulation with Resin bonded rock/mineral wool conforming to IS: 8183, density 48 kg/m3, 25 mm thick, wrapped in 100 G virgin black polythene bags placed over the false ceilng and held in position by criss- crossing Gl wire, etc. all complete as per customer's specification and direction of engineer-in charge.	40	sqm	₹ 104.41	₹ 4,176.20
114	Providing and fixing Resin Bonded glass wool insulation minimum 50 mm thick in aluminium foil backing shall be provided over false ceiling for thermal and acoustical insulation. The density of glass wool shall be 32 kg/cu.m (minimum) and shall conform to IS 8183. Maximum value shall be 1.0 W/sq.m/deg.C	40	sqm	₹ 173.67	₹ 6,946.80
115	Providing and laying non-pressure NP2 class (light duty) RCC pipes with collars jointed with stiff mixture of cement mortar in the proportion of 1:2 (1 cement: 2 fine sand) including testing of joints etc., complete: 300mm dia. RCC pipe	30	metre	₹ 459.59	₹ 13,787.70
116	Providing and laying non-pressure NP3 class (light duty) RCC pipes with collars jointed with stiff mixture of cement mortar in the proportion of 1:2 (1 cement: 2 fine sand) including testing of joints etc., complete: 100mm dia. RCC pipe	50	metre	₹ 744.33	₹ 37,216.48
117	Providing and laying non-pressure NP3 class (light duty) RCC pipes with collars jointed with stiff mixture of cement mortar in the proportion of 1:2 (1 cement: 2 fine sand) including testing of joints etc., complete: 450mm dia. RCC pipe	15	metre	₹ 1,660.11	₹ 24,901.65
118	Providing and laying Non Pressure NP-4 class (Heavy duty) R.C.C. pipes including collars/spigot jointed with stiff mixture of cement mortar in the proportion of 1:2 (1 cement : 2 fine sand) including testing of joints etc. complete: 450 mm dia RCC pipes.	5	metre	₹ 1,896.13	₹ 9,480.66
119	Providing and fixing aluminium extruded section body tubular type universal hydraulic door closer (having brand logo with ISI, IS : 3564, embossed on the body, door weight upto 36 kg to 80 kg a), with double speed adjustment with necessary accessories and screws etc. complete.	2	each	₹ 336.80	₹ 673.60
120	Providing and fixing chromium plated brass 100 mm mortice latch and lock with 6 levers and a pair of lever handles of approved quality with necessary screws etc. complete.	2	each	₹ 590.20	₹ 1,180.40
121	Providing and fixing chromium plated brass handles with necessary screws etc. complete: 125 mm	2	each	₹ 179.95	₹ 359.90
122	Providing and fixing chromium plated brass handles with necessary screws etc. complete: 100 mm	2	each	₹ 155.00	₹ 310.00
123	Providing and fixing ISI marked aluminium butt hinges anodised (anodic coating not less than grade AC 10 as per IS: 1868) transparent or dyed to required colour or shade with necessary screws etc. complete: 125x75x4 mm	4	each	₹ 101.98	₹ 407.92
124	Providing and fixing aluminium sliding door bolts, ISI marked anodised (anodic coating not less than grade AC 10 as per IS : 1868), transparent or dyed to required colour or shade, with nuts and screws etc. complete : 300x16 mm	2	each	₹ 184.35	₹ 368.70

BILL OF QUANTITY CUM PRICE SCHEDULE (ANNEXURE-I)

Name of Project: 400kV SWITCHYARD AT OPTCL DUBRI, PARADIP

Name of Work: CONSTRUCTION OF TOWER & EQUIPMENTS FOUNDATIONS, PANEL ROOM, REACTOR, ROAD, TRENCH, DRAIN, METAL SPREADING, FENCE & GATE, OPEN STORE & EARTHING WORKS ETC. OF 400 KV SWITCHYARD AT OPTCL DUBRI PARADIP IN ODISHA

Tender Spec. No.: TBSM/OPTCL-DUBRI/CIVIL/TENDER/23-24, Date: 06.06.2023

S. No.	Description of Item	Quantity	Unit	Unit Rate	Amount
125	Providing and fixing aluminium sliding door bolts, ISI marked anodised (anodic coating not less than grade AC 10 as per IS : 1868), transparent or dyed to required colour or shade, with nuts and screws etc. complete : 250x16 mm	3	each	₹ 164.68	₹ 494.04
126	Providing and fixing aluminium tower bolts, ISI marked, anodised (anodic coating not less than grade AC 10 as per IS : 1868) transparent or dyed to required colour or shade, with necessary screws etc. complete : 300x10 mm	4	each	₹ 85.64	₹ 342.56
127	Providing and fixing aluminium tower bolts, ISI marked, anodised (anodic coating not less than grade AC 10 as per IS : 1868) transparent or dyed to required colour or shade, with necessary screws etc. complete : 250x10 mm	2	each	₹ 75.81	₹ 151.62
128	Providing and fixing aluminium handles, ISI marked, anodised (anodic coating not less than grade AC 10 as per IS : 1868) transparent or dyed to required colour or shade, with necessary screws etc. complete : 125 mm	2	each	₹ 43.86	₹ 87.72
129	Providing and fixing aluminium handles, ISI marked, anodised (anodic coating not less than grade AC 10 as per IS : 1868) transparent or dyed to required colour or shade, with necessary screws etc. complete : 100 mm	2	each	₹ 38.77	₹ 77.54
130	Providing and fixing aluminium hanging floor door stopper, ISI marked, anodised (anodic coating not less than grade AC 10 as per IS : 1868) transparent or dyed to required colour and shade, with necessary screws etc. complete: Twin rubber stopper	2	each	₹ 32.53	₹ 65.06
131	Demolishing R.C.C. work manually/ by mechanical means including stacking of steel bars and disposal of unserviceable material within 50 metres lead as per direction of Engineer - in- charge.	5	cum	₹ 1,454.54	₹ 7,272.70
132	Demolishing brick work in cement mortar manually/ by mechanical means including stacking of serviceable material and disposal of unserviceable material within 50 metres lead as per direction of Engineer-in-charge.	5	cum	₹ 842.73	₹ 4,213.65
133	Providing and Placing in position suitable PVC water stops conforming to IS:12200 for construction/ expansion joints between two RCC members and fixed to the reinforcement with binding wire before pouring concrete etc. complete : Serrated with central bulb (225 mm wide, 8-11 mm thick)	500	metre	₹ 216.54	₹ 1,08,270.00
134	Fixing (all dia & length) foundation bolts in position with help of proper templates (template to be supplied by contractor) including nuts and washers without any tilt until completion of concrete, checking the alignment for various structures including cost of template, labour, lead lifts etc., all complete as per specs, drawings & directions of Engr-in-Charge. (Foundation bolts shall be supplied by BHEL). Note:- Weight of foundation bolts including nuts & washers only shall be measured for payment purpose.	15000	Kg	₹ 8.52	₹ 1,27,800.00
135	Fabricating, galvanising & supplying of foundation bolts manufactured with steel of various sizes as per drawing with 3 Nos GI nuts including welding a plate of size 100x100x12mm thick at the bottom of bolt including cost of materials, labour, lead lift, galvanisation, etc. complete (sample to be approved by Department Engineer at site) as per standard specification. Galvanisation shall be 610 gm/sqm. Note:- Weight of foundation bolts including nuts & washers only shall be measured for payment purpose. Fixing charges shall be paid in the respective item.	100	Kg	₹ 143.20	₹ 14,320.00
136	Providing and laying integral cement based water proofing treatment including preparation of surface as required for treatment of roofs, balconies, terraces etc consisting of following operations: (a) Applying a slurry coat of neat cement using 2.75 kg/sqm of cement admixed with water proofing compound conforming to IS. 2645 and approved by Engineer-in-charge over the RCC slab including adjoining walls upto 300 mm height including cleaning the surface before treatment. (b) Laying plain cement concrete 1:5:10 (1 cement : 5 fine sand : 10 burnt brick aggregate of 40mm nominal size) admixed with proprietary water proofing compound conforming to IS : 2645 and approved by Engineer-in-charge over 20 mm thick layer of cement mortar of mix 1:5 (1 cement :5 coarse sand) admixed with proprietary water proofing compound conforming to IS : 2645 and approved by Engineer-in-charge to required slope and treating similarly the adjoining walls upto 300 mm height including rounding of junctions of walls and slabs. (c) After two days of proper curing applying a second coat of cement slurry using 2.75 kg/ sqm of cement admixed with proprietary water proofing compound conforming to IS : 2645 and approved by Engineer-in-charge. (d) Finishing the surface with 20 mm thick jointless cement mortar of mix 1:4 (1 cement :4 coarse sand) admixed with proprietary water proofing compound conforming to IS : 2645 and approved by Engineer-in-charge including laying glass fibre cloth of approved quality in top layer of plaster and finally finishing the surface with trowel with neat cement slurry and making pattern of 300x300 mm square 3 mm deep. (e) The whole terrace so finished shall be flooded with water for a minimum period of two weeks for curing and for final test. All above operations to be done in order and as directed and specified by the Engineer-in-Charge : With average thickness of 120 mm and minimum thickness at khurra as 65 mm.	50	sqm	₹ 954.20	₹ 47,710.00
137	Making khurras 45X45cm with average minimum thickness of 5cm cement concrete 1:2:4 (1 cement: 2 coarse sand: 4 graded stone aggregate of 20mm nominal size) over PVC sheet 1mX1mX400micron, finished with 12mm cement plaster 1:3 (1 cement: 3 coarse sand) and a coat of neat cement rounding the edges and making and finishing the outlet complete.	2	each	₹ 178.17	₹ 356.34
138	Preparation and consolidation of sub grade with power road roller of 8 to 12 tonne capacity after excavating earth to an average of 22.5 cm depth,dressing to camber and consolidating with road roller including making good the undulations etc and re-rolling the sub grade and disposal of surplus earth lead upto 50 metres.	1400	sqm	₹ 90.09	₹ 1,26,126.00
139	Extra for compaction of earthwork in embankment under optimum moisture conditions to give at least 95% of the maximum dry density (Proctor density)	1400	sqm	₹ 10.70	₹ 14,980.00

BILL OF QUANTITY CUM PRICE SCHEDULE (ANNEXURE-I)

Name of Project: 400kV SWITCHYARD AT OPTCL DUBRI, PARADIP

Name of Work: CONSTRUCTION OF TOWER & EQUIPMENTS FOUNDATIONS, PANEL ROOM, REACTOR, ROAD, TRENCH, DRAIN, METAL SPREADING, FENCE & GATE, OPEN STORE & EARTHING WORKS ETC. OF 400 KV SWITCHYARD AT OPTCL DUBRI PARADIP IN ODISHA

Tender Spec. No.: TBSM/OPTCL-DUBRI/CIVIL/TENDER/23-24, Date: 06.06.2023

S. No.	Description of Item	Quantity	Unit	Unit Rate	Amount
140	Suppling and stacking at site: 90 mm to 45 mm size stone aggregate	220	cum	₹ 1,278.69	₹ 2,81,311.80
141	Suppling and stacking at site: 63 mm to 45 mm size stone aggregate	240	cum	₹ 1,386.53	₹ 3,32,767.20
142	Suppling and stacking at site: 53 mm to 22.5 mm size stone aggregate	220	cum	₹ 1,475.02	₹ 3,24,505.06
143	Suppling and stacking at site: Stone screening 13.2 mm nominal size (type A)	135	cum	₹ 1,439.66	₹ 1,94,354.10
144	Suppling and stacking at site: Stone screening 11.2 mm nominal size (type B)	50	cum	₹ 1,398.19	₹ 69,909.50
145	Suppling and stacking at site: moorum	50	cum	₹ 563.01	₹ 28,150.50
146	Laying, spreading and compacting stone aggregates of specified sizes to WBM specifications in uniform thickness, hand picking, rolling with 3-wheeled road / vibratory roller 8-10 tonne capacity in stages to proper grade and camber, applying and brooming requisite type of screening/ binding materials to fill up interstices of coarse aggregate, watering and compacting to the required density etc., all complete. (Payment will be made for compacted layers only. Stone aggregates, screenings & moorum to be paid separately). Subbase with stone aggregate 90mm to 45mm including stone screening 13.2mm size and moorum/blinding material.	165	cum	₹ 449.09	₹ 74,099.85
147	Laying, spreading and compacting stone aggregates of specified sizes to WBM specifications in uniform thickness, hand picking, rolling with 3-wheeled road / vibratory roller 8-10 tonne capacity in stages to proper grade and camber, applying and brooming requisite type of screening/ binding materials to fill up interstices of coarse aggregate, watering and compacting to the required density etc., all complete. (Payment will be made for compacted layers only. Stone aggregates, screenings & moorum to be paid separately). Base course with stone aggregate 63mm to 45mm including stone screening 13.2mm sizeand moorum/blinding material.	180	cum	₹ 449.09	₹ 80,836.20
148	Laying, spreading and compacting stone aggregates of specified sizes to WBM specifications in uniform thickness, hand picking, rolling with 3-wheeled road / vibratory roller 8-10 tonne capacity in stages to proper grade and camber, applying and brooming requisite type of screening/ binding materials to fill up interstices of coarse aggregate, watering and compacting to the required density etc., all complete. (Payment will be made for compacted layers only. Stone aggregates, screenings & moorum to be paid separately). Base course with stone aggregate 53mm to 22.4 mm including stone screening 11.2mm size and moorum/blinding material.	165	cum	₹ 449.09	₹ 74,099.85
149	Providing and laying polythene sheet of 125 microns between the PCC and RCC slab in road/ pavement works all complete as per direction of Engineer-in-Charge)	1400	sqm	₹ 12.70	₹ 17,780.00
150	Providing and laying 60mm thick factory made cement concrete interlocking paver block of M-30 grade made by block making machine with strong vibratory compaction, of approved size, design & shape, laid in required colour and pattern over and including 50mm thick compacted bed of coarse sand, filling the joints with fine sand etc. all complete as per the direction of Engineer-in-charge.	550	sqm	₹ 549.38	₹ 3,02,159.00
151	Providing and laying at or near ground level factory made kerb stone of M-25 grade cement concrete in position to the required line, level and curvature, jointed with cement mortar 1:3 (1 cement: 3 coarse sand), including making joints with or without grooves (thickness of joints except at sharp curve shall not to more than 5mm), including making drainage opening wherever required complete etc. as per direction of Engineer-in-charge (length of finished kerb edging shall be measured for payment). (Precast C.C. kerb stone shall be approved by Engineer-in-charge).	50	cum	₹ 4,335.95	₹ 2,16,797.50
152	Painting road kerb stone surface marking with adequate nos of coats to give uniform finish with ready mixed road marking paint conforming to IS:164, in white/yellow shade, including cleaning the surface of all dirt, scales, oil, grease and foreign material etc. complete: New work (Two or more coats)	400	sqm	₹ 129.94	₹ 51,976.00
153	Supplying and filling stone aggregate of 40mm nominal size over grating for transformer/reactor foundation as per customer's technical specification & the direction of Engineer-in-charge.	50	cum	₹ 1,239.78	₹ 61,989.00
154	R R masonry in CM 1:5 using random rough stone and bond stone including cost of all materials, leads, lift and curing etc complete. For toe wall and retaining wall as per standard specification.	500	cum	₹ 3,814.34	₹ 19,07,167.82
155	Dry stone pitching 22.5 cm thick including supply of stones and preparing surface complete.	100	sqm	₹ 491.76	₹ 49,176.00
156	Providing, laying and compacting stone base under the floors/foundations as per direction of Engineer-in-Charge including supply of stones, consolidation and preparing surface complete.	50	cum	₹ 1,638.80	₹ 81,940.00
157	Providing and filling in position, blown bitumen in expansion joints.	1	cum	₹ 48,989.00	₹ 48,989.00
158	Providing and filling in position bitumen mix filler of Proportion 80 kg. of hot bitumen, 1 kg of cement and 0.25 cubic metre of coarse sand for depth per expansion joints.	1	cum	₹ 15,984.00	₹ 15,984.00
159	Providing and fixing in position 12mm thick bitumen impregnated fibre board conforming to IS: 1838, including the cost of primer, sealing compound Grade-A in expansion joints.	500	per cm depth per 100 m	₹ 430.30	₹ 2,15,150.00

BILL OF QUANTITY CUM PRICE SCHEDULE (ANNEXURE-I)

Name of Project: 400kV SWITCHYARD AT OPTCL DUBRI, PARADIP

Name of Work: CONSTRUCTION OF TOWER & EQUIPMENTS FOUNDATIONS, PANEL ROOM, REACTOR, ROAD, TRENCH, DRAIN, METAL SPREADING, FENCE & GATE, OPEN STORE & EARTHING WORKS ETC. OF 400 KV SWITCHYARD AT OPTCL DUBRI PARADIP IN ODISHA

Tender Spec. No.: TBSM/OPTCL-DUBRI/CIVIL/TENDER/23-24, Date: 06.06.2023

S. No.	Description of Item	Quantity	Unit	Unit Rate	Amount
160	Providing and fixing in position pre moulded joint filler in expansion joints	100	per cm depth per cm width per m length	₹ 1.89	₹ 189.00
161	Providing and laying in position bitumen hot sealing compound for expansion joints etc.: Using grade A ceiling compound	100	per cm depth per cm width per m length	₹ 2.16	₹ 216.00
162	Providing and fixing G.I. chain link fabric fencing of required width in mesh size 50x50 mm including strengthening with 2 mm dia wire or nuts, bolts and washers as required complete as per the direction of Engineer-in-charge. Made of G.I. wire of dia. 4 mm, PVC coated to achieve outer dia not less than 5 mm in required colour and shade	235	sqm	₹ 541.31	₹ 1,27,207.85
163	Fabricating, galvanising, supplying & erection of fence post & frame manufactured with steel tube, angle, flat, etc., including supply & erection of hot dip galvanized bolts, nuts & washers, cost of materials, labour, lead, lift, galvanisation, etc. all complete as per drawing & customer's technical specification. Galvanisation shall be 615 gm/sqm. Note:- G.I. Chain Link Fabric shall be measured & paid separately.	2400	kg	₹ 87.60	₹ 2,10,240.00
164	Providing and fixing GI steel rungs/structure parts in concrete/brick walls/the water retaining structures having zinc coating of minimum 750 g/sqm etc. all complete as per customer's specification. The minimum coating of the zinc shall comply with IS:2629 and IS:2633. Galvanizing shall be checked and tested in accordance with IS:2629. The galvanizing shall be followed by the application of an etching primer and dipping in black bitumen.	20	kg	₹ 91.65	₹ 1,832.92
165	Grouting of block outs, pockets, foundations, bolts holes and underside of base plates with cement, sand aggregate (of size 6 mm and down) grout M-30 with non-shrink additive and shall be of strength not less than M30 including placing, curing, cleaning, surface preparation, testing, etc. complete with labour, materials, equipment, handling, testing, etc. all complete as per specifications, drawings and instructions of the Engineer.	5	cum	₹ 10,960.58	₹ 54,802.90
166	Antiweed treatment in switchyard area including micro leveling (earthwork cutting & filling upto ±200mm), dressing, compaction, effectiveness test of antiweed chemical, etc all complete as per Technical Specification and instruction of Engineer-in-charge including cost of all labour, materials, T&P, etc.	18000	sqm	₹ 17.26	₹ 3,10,680.00
167	Supplying and laying two layers of machine crushed metals (gravel) in switchyard over yard PCC as per drawing, technical specification and instruction of Engineer-in-charge, all complete including cost of all labour, materials, T&P, etc. but excluding the cost of PCC. Each layer shall have uniformly consolidated/ compacted thickness of 50mm (minimum). The first or base layer shall be of machine crushed 20mm nominal size of metals (gravel) above the yard PCC. Second or final layer shall be of machine crushed 20mm nominal size of metals (gravel) above the first layer. The total compacted thickness of the metals (20 mm Nominal) shall be100mm uniformly.	1800	cum	₹ 1,403.77	₹ 25,26,786.00
168	Construction of Rain Water Harvesting as per Technical Specification and Drawings including all labour, material, tools, tackles, equipments, safeguards & incidentals as necessary as per customer's Technical Specification and direction - of - Engineer -in- charge.	1	Nos	₹ 2,58,053.25	₹ 2,58,053.25
169	Providing & planting 100 nos fruit bearing plants and 100 nos other show plants at different loactions and near control room building including treatment of the soil and manuring before plantation of the plants, water taps with drip water irrigation system at different locations, water pipes, are to be provided for watering the plants, etc. all in complete as per customer's Technical Specification & instruction of the Engineer-in-charge. The contractor shall submit the development & plantation plan to the Engineer-in-charge for necessary instructions before start of the work.	200	each	₹ 199.98	₹ 39,995.00
170	Extra for providing additional zinc coating of 100 gms/sqm on above of 610gms/sqm the steel structures	200	kg	₹ 2.89	₹ 578.00
171	Dismantling of structural steel material of fencing post/struts, stacking of servicable materia to a lead of 50 metres and disposable of unservicable material upto a lead of 2 km including supply of labour,providing of tools and plants,cutting, welding etc. all complete as per drawing, specification and instruction of engineer in charge:	25	Each	₹ 1,301.00	₹ 32,525.00
172	Dismantling of existing chain link fence including dismantling of posts etc and re-erection of the same as per direction of site-in-charge. (The rate shall be exclusive of Concrete but inclusive of earthwork, brickwork, plaster, cement painting & shuttering and erection all complete)	100	RM	₹ 862.00	₹ 86,200.00
173	Dismantling steel work in built up sections (truss, rafter, purlin etc.) in angles, tees, flats and channels including all gusset plates, bolts, nuts, cutting rivets, welding etc. including dismembering and stacking within 50 metres lead.	2000	kg	₹ 2.40	₹ 4,800.00
174	Dismantling roofing including ridges, hips, valleys and gutters etc., and stacking the material within 50 metres lead of: G.S. Sheet	70	sqm	₹ 70.10	₹ 4,907.00
E.1	Unloading, handling & proper storage of 40mm (min) dia MS rod	145	MT	₹ 410.00	₹ 59,450.00

BILL OF QUANTITY CUM PRICE SCHEDULE (ANNEXURE-I)

Name of Project: 400kV SWITCHYARD AT OPTCL DUBRI, PARADIP

Name of Work: CONSTRUCTION OF TOWER & EQUIPMENTS FOUNDATIONS, PANEL ROOM, REACTOR, ROAD, TRENCH, DRAIN, METAL SPREADING, FENCE & GATE, OPEN STORE & EARTHING WORKS ETC. OF 400 KV SWITCHYARD AT OPTCL DUBRI PARADIP IN ODISHA

Tender Spec. No.: TBSM/OPTCL-DUBRI/CIVIL/TENDER/23-24, Date: 06.06.2023

S. No.	Description of Item	Quantity	Unit	Unit Rate	Amount
E.2	Handling, fabrication & laying of 40mm (min) dia MS rod at depth of 700mm (min) measured from the top of Finished Ground Level (FGL) and bringing out risers upto gravel level near the equipment/ building foundation in line with technical specification, including following activities but not limited to, - Excavation as per requirements - Laying of MS rod - Welding of rods in line with earthing philosophy and/ or technical spcification attached. - Backfilling of soil and compaction for bringing out risers of 40 dia MS rod for equipments. Risers shall be raised from the earthmat, positioned at 700mm (min) depth to gravel level and nearest point of the equipment. This shall include all activities such as cutting, bending, welding, fixing, application of paints on cutting & welding surface etc. - Any other work necessary to complete the below earthing work related to main earth mat and risers in all respect. MS rod for main earth mat and risers shall be provided by BHEL as a free issue material (FIM).	133	MT	₹ 13,230.00	₹ 17,59,590.00
E.3	Handling, fabrication & laying of auxiliary mat of 40mm (min) Dia MS rod at a depth of 300mm (min) from top of Finished Ground Level (FGL) including excavation & backfilling in line with technical specification & enclosed drawings. Work includes following but not limited to, - Excavation as per requirements - Fabrication of auxiliary mat including all activities such as cutting, bending, welding, fixing, application of paints on cutting & welding surface etc. - Welding of rods in line with earthing philosophy and technical spcification attached. - Backfilling and compaction - Any other work necessary to complete the auxiliary mat and its associated work in all respect. MS rod for auxiliary mat shall be provided by BHEL as a free issue material (FIM).	68	No	₹ 3,720.00	₹ 2,52,960.00
E.4	Handling, fabrication (if any) and installation of pipe electrode (Length - 3.0 meter) in line with technical specification, including following activities but not limited to, - Excavation as per requirements - Fabrication, if required & installation of electrode. - Electrodes in treated earth pit, as per applicable standards/ IS (For alternate layers of coke/ charcoal and salt or bentonite clay etc). - Backfilling and compaction - Construction of cement concrete pit with a ISI marked cast iron cover hinged to a cast iron frame to have an access to the joints including supply of materials. - any other work necessary to complete the work Only Pipe Electrode assembly i.e. GI Pipe, Nuts, Bolts & Washers, test link and funnel shall be provided by BHEL as a free issue material (FIM).	40	No	₹ 10,235.00	₹ 4,09,400.00
E.5	Handling, fabrication and installation of rod electrode with test pit (Length - 3.0 meter) in line with technical specification, including following activities but not limited to, - Excavation as per requirements - Fabrication & installation of electrode. - Backfilling and compaction - Construction of cement concrete pit with a ISI marked cast iron cover hinged to a cast iron frame to have an access to the joints including supply of materials. - any other work necessary to complete the work Materials for fabrication for rod Electrode assembly i.e. 40mm (min) MS rod, GI flat and harwares etc. shall be provided by BHEL as a free issue material (FIM).	25	No	₹ 4,915.00	₹ 1,22,875.00
E.6	Handling, fabrication and installation of rod electrode without test pit (to be driven upto 3.0 meter) in line with technical specification, including following activities but not limited to, - Excavation as per requirements - Fabrication & installation of electrode. - Backfilling and compaction - any other work necessary to complete the work Materials for fabrication for rod Electrode assembly i.e. 40mm (min) MS rod , GI flat and harwares etc. shall be provided by BHEL as a free issue material (FIM).	1	No	₹ 1,000.00	₹ 1,000.00
S.1	Open stores of size 2000 Sqm (As per specification enclosed with tender documents)	750	sqm	₹ 488.00	₹ 3,66,000.00
	Total Amount (Excluding GST)				**₹ 4,93,27,332**

Validate Print Help

Percentage BoQ

Tender Inviting Authority: BHEL, TBG- SubContracting Department, Sector 16A Noida, UP

Name of Work: CONSTRUCTION OF TOWER & EQUIPMENTS FOUNDATIONS, PANEL ROOM, REACTOR, ROAD, TRENCH, DRAIN, METAL SPREADING, FENCE & GATE, OPEN STORE & EARTHING WORKS ETC. OF 400 KV SWITCHYARD AT OPTCL DUBRI PARADIP IN ODISHA

Contract No: TBSM/OPTCL-DUBRI/CIVIL/TENDER/23-24 DATE 06.06.2023

Name of the Bidder/ Bidding Firm / Company :						

PRICE SCHEDULE

(This BOQ template must not be modified/replaced by the bidder and the same should be uploaded after filling the relevent columns, else the bidder is liable to be rejected for this tender. Bidders are allowed to enter the Bidder Name and Values only)

NUMBER #	TEXT #	NUMBER #	TEXT #	NUMBER	NUMBER #	TEXT #
Sl. No.	Item Description	Quantity	Units	Estimated Rate in Rs. P	TOTAL AMOUNT Without Taxes in Rs. P	TOTAL AMOUNT In Words
1	2	4	5	6	53	55
1	Total amount as per rates in BOQ (as per Annexure-I) for "CONSTRUCTION OF TOWER & EQUIPMENTS FOUNDATIONS, PANEL ROOM, REACTOR, ROAD, TRENCH, DRAIN, METAL SPREADING, FENCE & GATE, OPEN STORE & EARTHING WORKS ETC. OF 400 KV SWITCHYARD AT OPTCL DUBRI PARADIP IN ODISHA."- Excluding GST	1.000	Nos	49327332.00	**49327332.00**	INR Four Crore Ninety Three Lakh Twenty Seven Thousand Three Hundred & Thirty Two Only
Total in Figures					**49327332.00**	INR Four Crore Ninety Three Lakh Twenty Seven Thousand Three Hundred & Thirty Two Only
Quoted Rate in Figures			Select		**0.000**	INR Zero Only
Quoted Rate in Words					**INR Zero Only**	

BHARAT HEAVY ELECTRICALS LIMITED
TRANSMISSION PROJECTS ENGINEERING MANAGEMENT INDUSTRY SECTOR, NOIDA (U.P.).

DOCUMENT No.	**TB-420-607-003 DUBRI**	**Rev-0**	Prepared	Checked	Approved
TYPE OF DOC.	**BILL OF QUANTITY**	NAME	**VKA**	**SV**	**PLK**
TITLE **CONSTRUCTION OF TOWER & EQUIPMENT FOUNDATIONS, PANEL ROOM, REACTOR, ROAD, TRENCH, DRAIN, METAL SPREADING, FENCE & GATE, ETC.**		SIGN			
		DATE	24.5.23		24/5
		GROUP	**TBEM**	**W.O. No.**	
CUSTOMER	ODISHA POWER TRANSMISSION CORPORATION LTD.				
PROJECT	400kV SWITCHYARD AT OPTCL DUBRI, PARADIP				

COPYRIGHT & CONFIDENTIAL
The information in this document is the property of BHARAT HEAVY ELECTRICALS LIMITED

CONTENTS

SECTION NO.	TITLE	PAGE NO.
1.	SCOPE, SPECIFIC TECHNICAL REQUIREMENT & SCHEDULE OF ITEMS	1.1 TO 1.15
2.	STANDARD TECHNICAL SPECIFICATION	NA
3.	ENCLOSURES TO THE SPECIFICATION (a) Customer Specification	

Rev No.	Date	Altered	Checked	Approved				
Distribution				To	O/C			
				Copies	1	1		

SECTION - 1

SCOPE, SPECIFIC TECHNICAL REQUIREMENTS & QUANTITIES

1.1.0 SCOPE

1.1.1 The scope of work under this specification is Civil Works for construction of 400kV AIS Feeder bay extension at Dubri, Odisha being executed by BHEL on turnkey basis. The Customer is M/s Odisha Power Transmission Corporation Limited (M/s OPTCL).

1.1.2 The Civil Works shall generally include, *but not limited to*, the following:

(i) Clearing the land from plants & bush vegetation, removal of roots of trees & plants, etc.
(ii) Land development by cutting & filling or by filling from the excavated surplus earth or the borrowed earth whichever the case may be.
(iii) Tower & equipment foundation works.
(iv) Switchyard Panel room.
(v) Cable Trench /Duct Works incl. sump-pit & precast cover works, etc.
(vi) Drainage Works incl sump-pit & Rain Water Harvesting Works
(vii) Road works.
(viii) Box / Pipe Culverts/ Crossing Works for Cable Trenches/ Drains / Road/Pavement, etc.
(ix) Micro Grading, Antiweed Treatment, Site Surfacing with PCC & Metal Spreading, etc.
(x) Any other work required for the project.

1.1.3 The works to be performed in the above construction includes providing of all labour, supervision, materials, scaffolding, power, fuel, construction equipments, tools and plants, supplies, transportation, all incidental items necessary for successful completion of the work including contractor's supervision and in strict accordance with the drawings, specifications and with inspection and testing standards. The nature of work shall generally involve clearing the land from plants & bush vegetation, removal of roots of trees & plants, cutting & filling of all kinds of earth, leveling & compaction, excavation in all type of soil including dewatering, shoring, strutting, and filling under and around structures, backfilling with available excavated earth around completed structures, disposal of surplus soil, transportation & leveling of surplus earth in low lying area, steel formwork, providing necessary steel embedments and other inserts, concreting, random rubble stone masonry work, brickwork, fencing etc. all complete as per detailed specification, drawings and directions of Engineer-in-charge.

1.1.4 The Contractor shall execute the work as per the Field Quality Plan (FQP). All testing required shall be arranged by the Contractor at his own cost.

1.2.0 SPECIFIC TECHNICAL REQUIREMENT

1.2.1 The specific technical requirements for the execution of civil works shall be as per Customer's specification /I.S Specification. In case of any conflict between these, customer's specification shall prevail.

1.3.0 BILL OF QUANTITIES

1.3.1 The Bill of Quantity shall be as per page 1.5 to page 1. 15

1.3.2 The quantities indicated in the 'Bill of Quantity' are indicative and can vary to any extent. Contractor shall not be entitled for any claim for any such variation in the quantities.

1.3.3 The provision of Bill of Quantity, specifications and drawings shall be read in conjunction with each other and in case of conflict amongst them, the clarification shall be obtained from the Engineer-in-charge whose decision shall be final and binding.

1.3.4 **Method of measurement**:

1.3.4.1 Excavation shall be measured in cubic meters. The lateral dimensions to be considered for working out excavation quantity shall be the PCC dimension below the footing as per approved drawing. Nothing extra shall be paid for slope cutting, etc. Backfilling & disposal quantities shall be worked out based on the above dimensions only. However, the contractor shall maintain the required slope and working space as per the safety /statutory requirement and its cost is deemed to be included in quoted rate.

Backfilling quantity shall be measured only after completion of the backfilling activity & compaction tests as per FQP/TS/IS. Backfilling shall be done upto Finished Ground Level after completion of the foundation/trench works, in layers not exceeding 200mm thickness, watered and thoroughly consolidated as per FQP/Technical Specifications/IS. Soil lumped masses/ rock boulders, etc. if larger than 150mm in size, shall be broken in pieces in sizes smaller than 150mm. Finished surfaces shall be free of irregularities and depressions. Cost of breaking soil lumped masses / rock boulders into smaller pieces, compaction tests, etc. is deemed to be included in quoted rate.

Clause No. 5.1 of Vol-III (TS) E6-CIVIL WORKS of Customer Specification shall be followed for classification of earth work.

Where rock and soil are mixed, the measurement of the excavation shall be made as per PCC size. The rock shall be stacked and measured in stack. The net quantity of the rock shall be arrived at by applying deduction of 50% to allow for voids in stacks.

Where soil, soft rock, medium rock & hard rock are mixed, the measurement of the excavation shall be made as per PCC size. Excavated materials comprising of the soft rock, medium rock and hard rock shall be stacked separately, measured in stacks, and each reduced by 50% to allow for voids to arrive at the quantity payable under soft rock, medium rock and hard rock. In no case, the sum of net quantities shall exceed the total quantity of the excavated materials.

For other items, unless otherwise described the method of measurement as described in 'Method of Measurement of Building and Civil Engineering Works'-IS 1200 (Part I to XXV) latest edition of BIS shall be followed.

1.3.4.2 For item at S. No. 3, the **quantity of cutting only** shall be measured for payment purpose. No separate payment shall be payable for filling done of above cutting quantity. For item no. 4 & 5, the **quantity of the compacted filling only** shall be measured for payment purpose. Filling shall be done upto Finished Ground Level, in layers not exceeding 200mm thickness, watered and thoroughly consolidated as per FQP/Technical Specifications/IS.

Survey & Contour Map of the Sub-station area will be provided to the contractor on mobilization. Earthwork quantity in cutting and filling shall be calculated based on the Survey & Contour Map w.r.t. FGL provided to the contractor however the contractor may carry out the Survey & Contouring Works to re-check the quantity without any additional financial claim to BHEL on the account of Survey & Contouring Works.

1.4.0 SPECIFIC REQUIREMENT FOR CONCRETING WORKS

1.4.1 Hiring & running charges of pumps, boom placers, etc. to be used for concreting works are deemed to be included in the quoted rates of the respective items.

1.4.2 Charges for using scaffoldings in concreting/painting/plastering/brick-wall works of the buildings, firewalls, etc. are deemed to be included in the quoted rates of the respective items.

1.4.3 The contractor may use M20 grade design mix cement concrete in place of Nominal Mix 1:1.5:3 cement concrete on approval from M/s OPTCL. However, the contractor will not make any additional claim from BHEL for using Design Mix in place of Nominal Mix.

1.4.4 The contractor will be free to set up its own Concrete Batching Plant at the site, if M/s OPTCL permits, which shall be calibrated regularly in supervision of M/s OPTCL & BHEL however the contractor will not make any additional claim from BHEL for setting up the batching plant & its concrete production charges.

1.4.5 Plinth level defined in customer's Technical Specification "VOL-III(TS) E6-CIVIL WORKS Clause 13.1 shall be referred for measurement of concrete quantity w.r.t. Plinth Level.

1.4.6 The contractor will be free to use Ready Mixed Cement Concrete from the Outside Concrete Batching Plant on approval from M/s OPTCL, however the contractor will not make any additional claim from BHEL for supplying & placing in position of Ready-Mix Cement Concrete.

1.5.0 SPECIFIC REQUIREMENT FOR PROCUREMENT

1.5.1 Source /Brand/Make of all the construction/finishing materials shall be got approved from M/s OPTCL under the instruction of BHEL Site before start of the procurement.

1.5.2 The contractor will have to submit the Material Reconciliation/Test Reports, etc. of all the materials including Reinforcement Steel & Foundation Bolts issued to the contractor by BHEL as and when required as per Specification / FQP to be submitted by the contractor.

BILL OF QUANTITY CUM PRICE SCHEDULE

Name of Project	**400kV SWITCHYARD AT OPTCL DUBRI, PARADIP**
Name of Work	**CONSTRUCTION OF TOWER & EQUIPMENT FOUNDATIONS, PANEL ROOM, REACTOR,ROAD, TRENCH, DRAIN, METAL SPREADING, FENCE & GATE, ETC.**

S. No.	Description of Item	Quantity	Unit	Unit Rate Excl GST (Rs)	Amount Excl GST (Rs)
1	Clearing jungle including uprooting of rank vegetation, grass, brush wood, trees and saplings of girth up to 30 cm measured at a height of 1 m above ground level and removal of rubbish up to a distance of 50 m outside the periphery of the area cleared.	10800	sqm	7.20	77760.00
2	Clearing grass and removal of the rubbish up to a distance of 50 m outside the periphery of the area cleared.	7200	sqm	3.65	26280.00
3	Earthwork in excavation of ordinary soil, loading, unloading, transportation, levelling in low lying areas, watering and consolidation in required thickness with power roller **within sub-station premises** including cost of labour, lead, lift, T&P, etc., complete as per standard specification. (Note:- Only quantity of earthwork in cutting/ excavation shall be measured for payment purpose.)	100	cum	245.94	24594.00
4	Loading, unloading, transporting and levelling of the available excavated earth in the low lying area, watering and consolidation in required thickness with power roller **within sub-station premises** including cost of labour, lead, lift, T&P, etc., complete as per standard specification. (Note:- Only quantity of earthwork in filling after compaction shall be measured for payment purpose)	50	cum	119.99	5999.50
5	Supplying, spreading, compaction & watering of good earth in required thickness as per direction of officer-in-charge including royalty and carriage of upto 5 km complete. (Note:- Only quantity of earthwork in filling after compaction shall be measured for payment purpose)	3000	cum	301.00	903000.00
6	Earthwork in excavation by mechanical means (Hydraulic excavator)/ manual means over areas (exceeding 30cm in depth 1.5m in width as well as 10sqm on plan) including dewatering as necessary of rain water/ subsoil seepage water and disposal of excavated earth upto 100m and lift upto 3.50m, disposed earth to be levelled and neatly dressed: Soft/Loose Soil.	3400	cum	113.36	385424.00
7	Earthwork in excavation by mechanical means (Hydraulic excavator)/ manual means over areas (exceeding 30cm in depth 1.5m in width as well as 10sqm on plan) including dewatering as necessary of rain water/ subsoil seepage water and disposal of excavated earth upto 100m and lift upto 3.50m, disposed earth to be levelled and neatly dressed: Hard/Dense Soil.	2000	cum	125.95	251900.00
8	Earthwork in excavation by mechanical means (Hydraulic excavator)/ manual means over areas (exceeding 30cm in depth 1.5m in width as well as 10sqm on plan) including dewatering as necessary of rain water/ subsoil seepage water and disposal of excavated earth upto 100m and lift upto 3.50m, disposed earth to be levelled and neatly dressed: Muddy Soil.	1300	cum	138.55	180115.00
9	Earthwork in excavation by mechanical means (Hydraulic excavator)/ manual means over areas (exceeding 30cm in depth 1.5m in width as well as 10sqm on plan) including dewatering as necessary of rain water/ subsoil seepage water and disposal of excavated earth upto 100m and lift upto 3.50m, disposed earth to be levelled and neatly dressed: Soft/Disintegrated Rock (not requiring blasting).	100	cum	221.05	22105.00
10	Earthwork in excavation by mechanical means (Hydraulic excavator)/ manual means over areas (exceeding 30cm in depth 1.5m in width as well as 10sqm on plan) including dewatering as necessary of rain water/ subsoil seepage water and disposal of excavated earth upto 100m and lift upto 3.50m, disposed earth to be levelled and neatly dressed: Hard Rock (requiring blasting/using breaker machinery).	50	cum	389.80	19490.00
11	Earthwork in excavation by mechanical means (Hydraulic excavator)/ manual means in foundation trenches or drains (not exceeding 1.5m in width as well as 10sqm on plan) including dewatering as necessary of rain water/ subsoil seepage water and dressing of sides and ramming of bottoms, lift upto 3.50m, including getting out the excavated soil and disposal of surplus excavated soil as directed, within a lead of 100m: Soft/Loose Soil.	940	cum	149.76	140774.40
12	Earthwork in excavation by mechanical means (Hydraulic excavator)/ manual means in foundation trenches or drains (not exceeding 1.5m in width as well as 10sqm on plan) including dewatering as necessary of rain water/ subsoil seepage water and dressing of sides and ramming of bottoms, lift upto 3.50m, including getting out the excavated soil and disposal of surplus excavated soil as directed, within a lead of 100m: Hard/Dense Soil.	500	cum	166.40	83200.00
13	Earthwork in excavation by mechanical means (Hydraulic excavator)/ manual means in foundation trenches or drains (not exceeding 1.5m in width as well as 10sqm on plan) including dewatering as necessary of rain water/ subsoil seepage water and dressing of sides and ramming of bottoms, lift upto 3.50m, including getting out the excavated soil and disposal of surplus excavated soil as directed, within a lead of 100m: Muddy Soil.	350	cum	183.04	64064.00
14	Earthwork in excavation by mechanical means (Hydraulic excavator)/ manual means in foundation trenches or drains (not exceeding 1.5m in width as well as 10sqm on plan) including dewatering as necessary of rain water/ subsoil seepage water and dressing of sides and ramming of bottoms, lift upto 3.50m, including getting out the excavated soil and disposal of surplus excavated soil as directed, within a lead of 100m: Soft/Disintegrated Rock (not requiring blasting).	50	cum	275.85	13792.50
15	Earthwork in excavation by mechanical means (Hydraulic excavator)/ manual means in foundation trenches or drains (not exceeding 1.5m in width as well as 10sqm on plan) including dewatering as necessary of rain water/ subsoil seepage water and dressing of sides and ramming of bottoms, lift upto 3.50m, including getting out the excavated soil and disposal of surplus excavated soil as directed, within a lead of 100m: Hard Rock (requiring blasting/using breaker machinery).	50	cum	466.05	23302.50
16	Extra for every additional lift of 1.5 m or part thereof beyond 3.50m in excavation / banking/filling excavated or stacked materials - All kinds of soil	20	cum	51.75	1035.00
17	Filling available excavated earth (including rock) in trenches, plinth, sides of foundations, etc., in layers not exceeding 20cm in depth, consolidating each deposited layer by ramming and watering, lead upto 100m and lift upto 3.50m.	4180	cum	125.75	525635.00
18	Carriage & disposal of surplus excavated earth/rock beyond initial lead by mechanical means not necessarily all the times on pucca roads, including loading, unloading, dressing of excavated material, etc., complete as per specifications -Lead upto 1 km.	3500	cum	98.34	344190.00

BILL OF QUANTITY CUM PRICE SCHEDULE

Name of Project	**400kV SWITCHYARD AT OPTCL DUBRI, PARADIP**
Name of Work	**CONSTRUCTION OF TOWER & EQUIPMENT FOUNDATIONS, PANEL ROOM, REACTOR,ROAD, TRENCH, DRAIN, METAL SPREADING, FENCE & GATE, ETC.**

S. No.	Description of Item	Quantity	Unit	Unit Rate Excl GST (Rs)	Amount Excl GST (Rs)
19	Carriage & disposal of surplus excavated earth/rock beyond initial lead by mechanical means not necessarily all the times on pucca roads, including loading, unloading, dressing of excavated material, etc., complete as per specifications -Lead upto 3 km.	600	cum	124.51	74706.00
20	Carriage & disposal of surplus excavated earth/rock beyond initial lead by mechanical means not necessarily all the times on pucca roads, including loading, unloading, dressing of excavated material, etc., complete as per specifications -. Lead upto 5 km.	50	cum	149.17	7458.50
21	Supplying and filling in plinth with Jamuna/ local sand under floors including watering, ramming, consolidating and dressing complete.	10	cum	810.82	8108.20
22	Supplying chemical emulsion in sealed containers including delivery as specified. Chloropyriphos emulsifiable concentrate of 20%	200	litre	157.45	31490.00
23	Diluting & injecting chemical emulsion for PRE-CONSTRUCTIONAL ANTI-TERMITE treatment and creating a continuous chemical barrier under and all around the column pits, wall trenches, basement excavation, top surface of plinth filling, junction of wall & floor, along the external perimeter of building, expansion joints, over the top surface of consolidated earth on which apron is to be laid , surroundings of pipes and conduits, etc complete as per specifications (Plinth area of the building at ground floor only shall be measured for payment)	50	sqm	131.90	6595.00
24	Providing and laying in position cement concrete of specified grade excluding the cost of centering and shuttering - All work upto plinth level. '1:2:4 (1 cement : 2 coarse sand : 4 graded stone aggregate 20mm nominal size)	50	cum	4943.80	247190.00
25	Providing and laying in position cement concrete of specified grade excluding the cost of centering and shuttering - All work upto plinth level. '1:3:6 (1 cement : 3 coarse sand : 6 graded stone aggregate **20mm** nominal size)	335	cum	4522.52	1515044.20
26	Providing and laying in position cement concrete of specified grade excluding the cost of centering and shuttering - All work upto plinth level. '1:3:6 (1 cement : 3 coarse sand : 6 graded stone aggregate **40mm** nominal size)	10	cum	4415.45	44154.50
27	Providing and laying in position cement concrete of specified grade excluding the cost of centering and shuttering - All work upto plinth level. 1:4:8 (1 cement : 4 coarse sand : 8 graded stone aggregate **40mm** nominal size)	1500	cum	4148.54	6222810.00
28	Providing and laying damp proof course 50mm thick cement concrete 1:1.5:3 (1 Cement:1.5 coarse sand : 3 graded stone aggregate 10 mm nominal size) .	10	sqm	310.14	3101.40
29	Extra for providing and mixing water proofing material like "Plastocrete Super" or approved equivalent make in cement concrete work all complete as per specification and instruction of Engineer in Charge	1000	per 50kg cement	41.73	41730.00
30	Applying a coat of residual petroleum bitumen of penetration 80/100 of approved quality using 1.7 kg per sqm on damp proof course & foundation surface, etc. after cleaning the surface with brushes and finally with a piece of cloth lightly soaked in kerosene oil.	10	sqm	88.05	880.50
31	Making plinth protection 50mm thick of cement concrete 1:2:4 (1 cement : 2 coarse sand : 4 graded stone aggregate 20 mm nominal size) over 75mm thick bed of dry brick ballast 40 mm nominal size, well rammed and consolidated and grouted with fine sand, including necessary excavation, levelling & dressing & finishing the top smooth.	25	sqm	426.82	10670.50
32	Providing and laying in position machine mixed nominal mix 1:1.5:3 (1 cement : 1.5 coarse sand (zone-III): 3 graded stone aggregate 20 mm nominal size) cement concrete for reinforced cement concrete work including pumping of concrete to site of laying but excluding the cost of centering, shuttering, finishing and reinforcement, including admixtures in recommended proportions as per IS: 9103 to accelerate, retard setting of concrete, improve workability without impairing strength and durability as per direction of Engineer-in-charge. (Note :- Cement content shall be as per customer's technical specification): All works upto plinth level	2500	cum	5570.21	13925525.00
33	Providing and laying in position machine mixed nominal mix 1:1.5:3 (1 cement : 1.5 coarse sand (zone-III): 3 graded stone aggregate 20 mm nominal size) cement concrete for reinforced cement concrete work including pumping of concrete to site of laying but excluding the cost of centering, shuttering, finishing and reinforcement, including admixtures in recommended proportions as per IS: 9103 to accelerate, retard setting of concrete, improve workability without impairing strength and durability as per direction of Engineer-in-charge. (Note :- Cement content shall be as per customer's technical specification): All works above plinth level upto terrace level	150	cum	6501.16	975174.00
34	Providing & fixing in position precast cement concrete trench covers or perforated covers wherever necessary at various elevations in all kinds of work including moulding, formwork, mixing, laying out, compacting and curing, storing, transportation, erection without damage, setting in position with cement and sand mortar, grouting etc all as per specs, drawings and directions of Engr-in-Charge but excluding the cost of reinforcement, inserts, edge angles, etc. Machine batched and machine mixed nominal mix1:1.5:3 (1 cement : 1.5 coarse sand (zone-III): 3 graded stone aggregate 20 mm nominal size). (Note :- Cement content shall be as per customer's technical specification).	60	cum	6672.21	400332.60
35	Centering and shuttering including strutting, propping, etc., and removal of form at all heights for Foundations, footings, bases of columns, etc., for mass concrete.	1200	sqm	184.42	221304.00
36	Centering and shuttering including strutting, propping, etc., and removal of form at all heights for RCC walls at all levels (any thickness).	5800	sqm	369.24	2141592.00
37	Centering and shuttering including strutting, propping, etc., and removal of form at all heights for Suspended floors, roofs, landings, balconies and access platform	110	sqm	413.62	45498.20
38	Centering and shuttering including strutting, propping, etc., and removal of form at all heights for Lintels, beams, plinth beams, girders, bressumers and cantilevers	70	sqm	333.23	23326.10
39	Centering and shuttering including strutting, propping, etc., and removal of form at all heights for Columns, Pillars, Piers, Abutments, Posts and Struts	1730	sqm	454.41	786129.30

BILL OF QUANTITY CUM PRICE SCHEDULE

Name of Project	**400kV SWITCHYARD AT OPTCL DUBRI, PARADIP**
Name of Work	**CONSTRUCTION OF TOWER & EQUIPMENT FOUNDATIONS, PANEL ROOM, REACTOR,ROAD, TRENCH, DRAIN, METAL SPREADING, FENCE & GATE, ETC.**

S. No.	Description of Item	Quantity	Unit	Unit Rate Excl GST (Rs)	Amount Excl GST (Rs)
40	Steel reinforcement-Cold twisted bars /TMT- Fe500/500D (To be procured from SAIL,TATA/TISCO, IISCO, RINL, JINDAL and customer approved Make/Source only). Including supply, straightning, cutting and bending, binding (i/c cost of binding wire), placing in position, etc., all labour & material, complete.	11000	kg	49.62	545820.00
41	Steel reinforcement-Cold twisted bars /TMT- Fe500/500D. Excluding supply but including straightning, cutting, bending, binding (i/c cost of binding wire), placing in position, etc., all labour & material, complete. (Reinforcement steel shall be supplied by BHEL free of cost at site. Unloading, storing, watch & ward, handling & testing of material as per FQP is in the scope of the contractor)	200000	kg	11.00	2200000.00
42	Structural steelwork welded in built up sections like edge protection angles,insert plates with lugs & framed work including providing, cutting, hoisting, fixing in position/ embedding in concrete and applying a priming coat of approved steel primer all complete.	33000	kg	51.36	1694880.00
43	Steelwork welded in built up sections/framed work including providing, cutting, hoisting, fixing in position and applying a priming coat of approved steel primer using structural steel etc., as required. In covering of floors/trenches inside the buildings with chequered plates, stringers, treads, landings etc of staircases involving use of chequered plates, wherever required, all complete.	3500	kg	56.66	198310.00
44	Steelwork welded in built up sections/framed work including providing, cutting, hoisting, fixing in position and applying a priming coat of approved steel primer using structural steel, etc., as required. In gratings, rails, mono rails, frames, ladders, stair railings, gates (including pipe), gantry girder (beams, channels, etc), grills and similar works.	22000	kg	78.07	1717540.00
45	Extra for providing galvanisation in the structural steel work. (Mass of zinc coating = 610gms/sqm). Cost of supply, fabrication, erection etc. of steel will be paid in respective items however black weight of the steel galvanised shall be measured for payment.	35000	kg	17.33	606550.00
46	Brick work with common burnt clay F.P.S. (non modular) bricks of class designation 7.5 in foundation and plinth in: Cement mortar 1:5 (1 cement : 5 coarse sand)	20	cum	4610.85	92217.00
47	Brick work with common burnt clay F.P.S. (non modular) bricks of class designation 7.5 in superstructure above plinth level up to floor V level in all shapes and sizes in : Cement mortar 1:5 (1 cement : 5 coarse sand)	20	cum	5442.03	108840.60
48	Brick work with flyash F.P.S. (non modular) brick of class designation 7.5 in superstructure above plinth level up to floor five level in : Cement mortar 1:5 (1 cement : 5 coarse sand)	5	cum	4899.06	24495.30
49	Brick work with flyash F.P.S. (non modular) brick of class designation 7.5 in superstructure above plinth level up to floor five level in : Cement mortar 1:6 (1 cement : 6 coarse sand)	5	cum	4812.28	24061.40
50	Half brick masonry with non modular bricks of class designation 7.5 in foundation and plinth in: Cement mortar 1:4 (1 cement : 4 coarse sand)	10	sqm	562.70	5627.00
51	Half brick masonry with non modular bricks of class designation 7.5 in superstructure above plinth upto floor V level: Cement mortar 1:4 (1 cement : 4 coarse sand)	10	sqm	653.36	6533.60
52	Extra for providing and placing in position 2 Nos 6mm dia. M.S. bars at every fourth course of half brick masonry.	10	sqm	48.21	482.10
53	Cutting holes of required size in brick masonry wall for fixing of exhaust fan including providing and fixing 300 mm dia PVC pipe conforming BIS-12818 and making good the same etc. complete as per direction of Engineer-in-charge.	2	each	138.40	276.80
54	Providing & fixing chicken wire mesh in plaster all complete as per specification and direction of Engineer - in - charge.	270	sqm	42.00	11340.00
55	12mm cement plaster on the even/smooth side of the internal walls in the mix: 1:6 (1cement :6 fine sand)	90	sqm	154.72	13924.80
56	15mm cement plaster on rough side of the single or half brick walls in the mix: 1:6 (1cement :6 fine sand)	10	sqm	178.47	1784.70
57	18mm cement external (or rough side) plaster in two coats under layer 12 mm thick cement plaster 1:5 (1 cement : 5 coarse sand) finished with a top layer 6mm thick cement plaster 1:3 (1 cement : 3 coarse sand) finished rough with sponge.	100	sqm	259.23	25923.00
58	6mm cement plaster to ceiling of mix. 1:3 (1 cement : 3 fine sand)	50	sqm	138.39	6919.50
59	12 mm cement plaster of mix : 1:5 (1 cement: 5 fine sand)	5	sqm	159.72	798.60
60	18 mm cement plaster of mix : 1:4 (1 cement: 4 coarse sand)	5	sqm	219.19	1095.95
61	25 mm cement plaster of mix : 1:4 (1 cement: 4 coarse sand)	5	sqm	298.76	1493.80
62	Neat cement punning.	100	sqm	39.55	3955.00
63	Extra for providing and mixing water proofing material in cement plaster work in proportion recommended by the manufacturers	100	Per bag of 50 kg cement used in the mix	44.12	4412.00
64	Cement plaster skirting (upto 15cm height) with cement mortar 1:3 (1cement: 3 coarse sand) mixed with metallic hardener in same ratio as for floor finished with a floating coat of neat cement: 21mm thick	10	sqm	191.89	1918.93
65	Providing and laying vitrified floor tiles in different sizes (thickness to be specified by the manufacturer) with water absorption less than 0.08% and conforming to IS: 15622, of approved make, in all colours and shades, laid on 20mm thick cement mortar 1:4 (1 cement : 4 coarse sand), jointing with grey cement slurry @ 3.3kg/sqm including grouting the joints with white cement and matching pigments etc., complete: Size of Tile 500x500 mm	20	sqm	879.97	17599.40

BILL OF QUANTITY CUM PRICE SCHEDULE

Name of Project	**400kV SWITCHYARD AT OPTCL DUBRI, PARADIP**
Name of Work	**CONSTRUCTION OF TOWER & EQUIPMENT FOUNDATIONS, PANEL ROOM, REACTOR,ROAD, TRENCH, DRAIN, METAL SPREADING, FENCE & GATE, ETC.**

S. No.	Description of Item	Quantity	Unit	Unit Rate Excl GST (Rs)	Amount Excl GST (Rs)
66	Providing and laying Polished Granite stone flooring in required design and patterns, in linear as well as curvilinear portions of the building, all complete as per the architectural drawings, with 13 mm thick stone slab over 20 mm (average) thick base of cement mortar 1:4 (1 cement : 4 coarse sand), laid and jointed with cement slurry and pointing with white cement slurry admixed with pigment of matching shade, including rubbing, curing and polishing etc. all complete as specified and as directed by the Engineer-in-Charge. Polished Granite stone slab jet Black, Cherry Red, Elite Brown, Cat Eye or equivalent.	5	sqm	1848.91	9244.55
67	Providing and laying Ceramic glazed floor tiles of size 300x300 mm (thickness to be specified by the manufacturer), of 1st quality conforming to IS:15622 of approved make in colours such as **White, Ivory, Grey, Fume Red Brown**, laid on 20 mm thick cement mortar 1:4 (1 Cement : 4 Coarse sand), jointing with grey cement slurry @ 3.3kg/sqm including pointing the joints with white cement and matching pigment etc., complete.	5	sqm	616.92	3084.60
68	Providing and laying Ceramic glazed floor tiles of size 300x300 mm (thickness to be specified by the manufacturer), of 1st quality conforming to IS:15622, of approved make, in all colours, shades, **except White, Ivory, Grey, Fume Red Brown**, laid on 20 mm thick bed of cement mortar 1:4 (1 Cement : 4 Coarse sand), jointing with grey cement slurry @ 3.3kg/sqm including pointing the joints with white cement and matching pigments etc., complete.	5	sqm	663.96	3319.80
69	Providing and fixing Ist quality ceramic glazed wall tiles conforming to IS: 15622 (thickness to be specified by the manufacturer), of approved make, in all colours, shades except burgundy, bottle green, black of any size as approved by Engineer-in-Charge, in skirting, risers of steps and dados, over 12 mm thick bed of cement mortar 1:3 (1 cement : 3 coarse sand) and jointing with grey cement slurry @ 3.3kg per sqm, including pointing in white cement mixed with pigment of matching shade complete.	125	sqm	676.81	84601.25
70	Chequerred precast cement concrete tiles 22 mm thick in footpath & courtyard, jointed with neat cement slurry mixed with pigment to match the shade of tiles, including rubbing and cleaning etc. complete, on 20 mm thick bed of cement mortar 1:4 (1 cement: 4 coarse sand). Dark shade pigment using ordinary cement	50	sqm	622.99	31149.50
71	Providing and applying 2 coats of plaster of paris putty/ punning (JK Birla / Bison Make) of minimum 2mm thickness over the plastered surfaces of walls/concrete to prepare the surface even and smooth complete including applying of sand paper to remove the undulation of the walls, etc. as per Technical Specification and direction of engineer-in-charge.	100	sqm	117.08	11708.00
72	Providing and applying white cement based putty of average thickness 1 mm, of approved brand and manufacturer, over the plastered wall surface to prepare the surface even and smooth complete.	90	sqm	82.18	7396.20
73	Plaster drip course /groove in plastered surface or moulding to RCC projections:	50	meter	34.15	1707.50
74	White washing with lime to give an even shade New work (three or more coats)	10	sqm	16.97	169.70
75	Distempering with oil bound washable distemper of approved brand and manufacture to give an even shade : New work (two or more coats) over and including water thinnable priming coat with cement primer	5	sqm	91.81	459.05
76	Wall painting with plastic emulsion paint of approved brand and manufacture to give an even shade: Two or more coats on new work	35	sqm	78.95	2763.25
77	Wall painting with acrylic emulsion paint, having VOC (Volatile Organic compound) content less than 50 grams/ litre, of approved brand and manufacture, including applying additional coats wherever required, to achieve even shade and colour. Two or more coats on new work	80	sqm	71.22	5697.60
78	Applying priming coats with primer of approved brand and manufacture, having low VOC (Volatile Organic Compound) content. With water thinnable cement primer on wall surface having VOC content less than 50 grams/litre	25	sqm	36.27	906.75
79	Finishing walls with water proofing cement paint of required shade : New work (Two or more coats applied @ 3.84 kg/10 sqm)	50	sqm	56.21	2810.50
80	Finishing walls with Acrylic Smooth exterior paint of required shade : New work (Two or more coat applied @ 1.67 ltr/10 sqm over and including priming coat of exterior primer applied @ 2.20 kg/10 sqm)	20	sqm	85.91	1718.20
81	Painting with synthetic enamel paint of approved brand and manufacture to give an even shade: Two or more coats on new work.	10	sqm	74.91	749.10
82	Applying priming coat with ready mixed red oxide zinc chromate primer of approved brand and manufacture on steel galvanised iron/ steel works	10	sqm	28.47	284.70
83	Providing and fixing pressed steel door frames confirming to IS:4351 manufactured from commercial mild steel sheet of 1.25mm thickness including hinges, jamb, lock jamb, bead and if required angle threshold of mild steel angle of section 50X25mm, or base ties of 1.25mm pressed mild steel welded or rigidly fixed together by mechanical means, adjustable lugs with spit end tail to each jamb including steel butt hinges 2.5mm thick with mortar guards, lock strike plate and shock absorbers as specified and applying a coat of approved steel primer after pre-treatment of the surface as directed by Engineer-in-Charge: Profile C	7	metre	318.17	2227.19
84	Providing & fixing 45mm steel door shutter made of double sheet 18G steel suitably reinforced with horizontal stiffners and filled with mineral wool, fixtures like handles, tower bolts, Aldrops,etc., all complete as per drawing and instruction of Engineer -in-Charge.	6	sqm	5858.53	35151.18

BILL OF QUANTITY CUM PRICE SCHEDULE

Name of Project	**400kV SWITCHYARD AT OPTCL DUBRI, PARADIP**
Name of Work	**CONSTRUCTION OF TOWER & EQUIPMENT FOUNDATIONS, PANEL ROOM, REACTOR,ROAD, TRENCH, DRAIN, METAL SPREADING, FENCE & GATE, ETC.**

S. No.	Description of Item	Quantity	Unit	Unit Rate Excl GST (Rs)	Amount Excl GST (Rs)
85	Providing and fixing factory made ISI marked steel glazed doors, windows and ventilators, side /top /centre hung, with beading and all members such as F7D, F4B, K11 B and K12 B etc. complete of standard rolled steel sections, joints mitred and flash butt welded and sash bars tenoned and riveted, including providing and fixing of hinges, pivots, including priming coat of approved steel primer, but excluding the cost of other fittings, complete all as per approved design, (sectional weight of only steel members shall be measured for payment). Fixing with 15x3 mm lugs 10 cm long embedded in cement concrete block 15x10x10 cm of C.C. 1:3:6 (1 Cement : 3 coarse sand : 6 graded stone aggregate 20 mm nominal size)	10	sqm	104.76	1047.60
86	Providing and fixing circular/ Hexagonal cast iron or M.S. sheet box for ceiling fan clamp of internal dia 140mm, 73mm height, 3mm thick rim, top lid of 1.5mm thick M.S. sheet with its top surface hacked for proper bonding, top lid shall be screwed into the cast iron/ M.S. sheet box by means of 3.3 mm dia round headed screws, one lock at the corners. Clamp shall be made of 12 mm dia M.S. bar bent to shape as per standard drawing with over all length as 80cm.	2	each	115.08	230.16
87	Providing and fixing angle iron frames for doors, windows and ventilators of mild steel Angle sections of size 35x35x5 mm, joints mitred and welded by angle iron 35x35x5 mm or 35x5 mm flat pieces to the existing T-iron frame or to the wall with dash fastener, including fixing of necessary butt hinges and screws and applying a priming coat of approved steel primer, all complete as per the direction of Engineer-In-charge.	50	kg	58.95	2947.54
88	Providing & fixing MS steel door shutter having frame of angle section of size 25x25x3 mm, one horizontal mullion of angle section of size 25x25x3 mm, two diagonals between frame & mullion members of 10mm square bars and 1.00mm thick steel sheet suitably welded including fixtures like handles, tower bolts, Aldrops, applying a priming coat of approved steel primer, etc., all complete as per drawing and instruction of Engineer -in-Charge.	25	kg	60.38	1509.50
89	Providing and fixing M.S. grills of required pattern in frames of windows etc. with MS flats,square or round bars etc. including priming coat with approved steel primer all complete.all complete.	25	kg	104.57	2614.25
90	Providing and fixing factory made uPVC white colour casement/casement cum fixed glazed windows comprising of uPVC multichambered frame, sash and mullion (where ever required) extruded profiles duly reinforced with 1.60 ± 0.2 mm thick galvanized mild steel section made from roll forming process of required length (shape & size according to uPVC profile), uPVC extruded glazing beads of appropriate dimension, EPDM gasket, stainless steel (SS 304 grade) friction hinges, zinc alloy (white powder coated) casement handles, G.I fasteners 100 x 8 mm size for fixing frame to finished wall, plastic packers, plastic caps and necessary stainless steel screws etc. Profile of frame & sash shall be mitred cut and fusion welded at all corners, mullion (if required) shall be also fusion welded including drilling of holes for fixing hardware's and drainage of water etc. After fixing frame the gap between frame and adjacent finished wall shall be filled with weather proof silicon sealant over backer rod of required size and of approved quality, all complete as per approved drawing & direction of Engineer-in-Charge. (Single / double glass panes and silicon sealant shall be paid separately) Casement window single panel with S.S. friction hinges (400 x 19 x 1.9 mm) made of (big series) frame 67 x 60 mm & sash 67 x 80 mm both having wall thickness of 2.3 ± 0.2 mm and single glazing bead / double glazing bead of appropriate dimension. (Area of window above 0.75 sqm.)	5	sqm	7138.88	35694.39
91	Providing and fixing factory made uPVC white colour casement/casement cum fixed glazed windows comprising of uPVC multichambered frame, sash and mullion (where ever required) extruded profiles duly reinforced with 1.60 ± 0.2 mm thick galvanized mild steel section made from roll forming process of required length (shape & size according to uPVC profile), uPVC extruded glazing beads of appropriate dimension, EPDM gasket, stainless steel (SS 304 grade) friction hinges, zinc alloy (white powder coated) casement handles, G.I fasteners 100 x 8 mm size for fixing frame to finished wall, plastic packers, plastic caps and necessary stainless steel screws etc. Profile of frame & sash shall be mitred cut and fusion welded at all corners, mullion (if required) shall be also fusion welded including drilling of holes for fixing hardware's and drainage of water etc. After fixing frame the gap between frame and adjacent finished wall shall be filled with weather proof silicon sealant over backer rod of required size and of approved quality, all complete as per approved drawing & direction of Engineer-in-Charge. (Single / double glass panes and silicon sealant shall be paid separately) Casement window double panels with S.S. friction hinges (350 x 19 x 1.9 mm) made of (big series) frame 67 x 60 mm & sash / mullion 67 x 80 mm both having wall thickness of 2.3 ± 0.2 mm and single glazing bead/ double glazing bead of appropriate dimension. (Area of window above 1.50 sqm).	10	sqm	7323.02	73230.20
92	Providing and fixing factory made uPVC white colour casement/ Casement cum fixed glazed door comprising of uPVC multichambered frame, sash and mullion (where ever required) extruded profiles duly reinforced with 1.60 ± 0.2 mm thick galvanized mild steel section made from roll forming process of required length (shape & size according to uPVC profile), uPVC extruded glazing beads of appropriate dimension, EPDM gasket, zinc alloy (white powder coated) 3D hinges and one handle on each side of panels along with zinc plated mild steel multi point locking having transmission gear, cylinder with keeps and one side key, G.I fasteners 100 x 8 mm size for fixing frame to finished wall and necessary stainless steel screws, etc. Profile of frame & sash shall be mitred cut and fusion welded at all corners, mullion (if required) shall be also fusion welded including drilling of holes for fixing hardware's and drainage of water etc. After fixing frame the gap between frame and adjacent finished wall shall be filled with weather proof silicon sealent over backer rod of required size and of approved quality, all complete as per approved drawing & direction of Engineer-in-Charge. (Single / double glass panes and silicon sealent shall be paid separately). Casement **door with 3D hinges made of (big series)** frame 67 x 64 mm & sash 67 x 110 mm both having wall thickness of 2.3 ± 0.2 mm and single glazing bead/ double glazing bead of appropriate dimension. (**Area of door upto 2.00 sqm**).	5	sqm	6844.00	34220.00

BILL OF QUANTITY CUM PRICE SCHEDULE

Name of Project	**400kV SWITCHYARD AT OPTCL DUBRI, PARADIP**
Name of Work	**CONSTRUCTION OF TOWER & EQUIPMENT FOUNDATIONS, PANEL ROOM, REACTOR,ROAD, TRENCH, DRAIN, METAL SPREADING, FENCE & GATE, ETC.**

S. No.	Description of Item	Quantity	Unit	Unit Rate Excl GST (Rs)	Amount Excl GST (Rs)
93	Providing and fixing factory made uPVC white colour sliding glazed window upto 1.50 m in height dimension comprising of uPVC multi-chambered frame with in-built roller track and sash extruded profiles duly reinforced with 1.60 ± 0.2 mm thick galvanized mild steel section made from roll forming process of required length (shape & size according to uPVC profile), appropriate dimension of uPVC extruded glazing beads and uPVC extruded interlocks, EPDM gasket, wool pile, zinc alloy (white powder coated) touch locks with hook, zinc alloy body with single nylon rollers (weight bearing capacity to be 40 kg), G.I fasteners 100 x 8 mm size for fixing frame to finished wall and necessary stainless steel screws etc. Profile of frame & sash shall be mitred cut and fusion welded at all corners, including drilling of holes for fixing hardware's and drainage of water etc. After fixing frame the gap between frame and adjacent finished wall shall be filled with weather proof silicon sealent over backer rod of required size and of approved quality, all complete as per approved drawing & direction of Engineer-in-Charge. (Single / double glass panes, wire mesh and silicon sealant shall be paid separately) **Two track two panels sliding window made of (small series)** frame 52 x 44 mm & sash 32 x 60 mm both having wall thickness of 1.9 ± 0.2 mm and single glazing bead of appropriate dimension. (**Area of window upto 1.75 sqm**)	5	sqm	4943.00	24715.00
94	Providing and fixing factory made uPVC white colour sliding glazed window above 1.50 m in height dimension comprising of uPVC multi-chambered frame with in-built roller track and sash extruded profiles duly reinforced with 1.60 ± 0.2 mm thick galvanized mild steel section made from roll forming process of required length (shape & size according to uPVC profile), appropriate dimension of uPVC extruded glazing beads, uPVC extruded interlocks and uPVC extruded Inline sash adaptor (if required), EPDM gasket, wool pile, zinc alloy (white powder coated) handle on one side of extreme panel along with zinc plated mild steel multi point locking having transmission gear with keeps, zinc alloy (white powder coated) touch lock with hook (if required for wire mesh panel), stainless steel (SS 304 grade) body with adjustable double nylon rollers (weight bearing capacity to be 120 kg), G.I fasteners 100 x 8 mm size for fixing frame to finished wall and necessary stainless steel screws etc. Profile of frame & sash shall be mitred cut and fusion welded at all corners, including drilling of holes for fixing hardware's and drainage of water etc. After fixing frame the gap between frame and adjacent finished wall shall be filled with weather proof silicon sealent over backer rod of required size and of approved quality, all complete as per approved drawing & direction of Engineer-in-Charge. (Single / double glass panes, wire mesh and silicon sealant shall be paid separately). Two track two panels sliding window made of (big series) frame 67 x 50 mm & sash 46 x 62 mm both having wall thickness of 2.3 ± 0.2 mm and single glazing bead / double glazing bead of appropriate dimension. (Area of window above 2.50 sqm upto 4.00 sqm.)	5	sqm	4860.00	24300.00
95	Providing and fixing aluminium work for doors, windows, ventilators and partitions with extruded built up standard tubular sections/appropriate Z sections and other sections of HINDALCO or approved equal make conforming to IS:733 and IS:1285 (anodised transparent or dyed to required shade according to IS: 1868, Minimum anodic coating of grade AC 15) including fixing with dash fasteners of required dia and size, including necessary filling up the gaps at junctions, i.e. at top, bottom and sides with required EPDM rubber/ neoprene gasket etc. Aluminium sections shall be smooth, rust free, straight, mitred and jointed mechanically wherever required including cleat angle, Aluminium snap beading for glazing / paneling, C.P. brass / stainless steel screws, all complete as per architectural drawings and the directions of Engineer-in-charge. (Glazing, paneling and dash fasteners to be paid for separately) : For fixed portion	25	kg	302.77	7569.25
96	Providing and fixing aluminium work for doors, windows, ventilators and partitions with extruded built up standard tubular sections/appropriate Z sections and other sections of HINDALCO or approved equal make conforming to IS:733 and IS:1285 (anodised transparent or dyed to required shade according to IS: 1868, Minimum anodic coating of grade AC 15) including fixing with dash fasteners of required dia and size, including necessary filling up the gaps at junctions, i.e. at top, bottom and sides with required EPDM rubber/ neoprene gasket etc. Aluminium sections shall be smooth, rust free, straight, mitred and jointed mechanically wherever required including cleat angle, Aluminium snap beading for glazing / paneling, C.P. brass / stainless steel screws, all complete as per architectural drawings and the directions of Engineer-in-charge. (Glazing, paneling and dash fasteners to be paid for separately) : For shutters of doors, windows & ventilators including providing and fixing hinges/ pivots and making provision for fixing of fittings wherever required including the cost of EPDM rubber / neoprene gasket required (Fittings shall be paid for separately)	20	kg	366.04	7320.80

BILL OF QUANTITY CUM PRICE SCHEDULE

Name of Project	**400kV SWITCHYARD AT OPTCL DUBRI, PARADIP**
Name of Work	**CONSTRUCTION OF TOWER & EQUIPMENT FOUNDATIONS, PANEL ROOM, REACTOR,ROAD, TRENCH, DRAIN, METAL SPREADING, FENCE & GATE, ETC.**

S. No.	Description of Item	Quantity	Unit	Unit Rate Excl GST (Rs)	Amount Excl GST (Rs)
97	Providing & fixing double glazed hermetically sealed glazing in aluminium/UPVC windows, ventilators and partitions, etc, with 6mm thick toughened safety glass conforming to IS: 2553. Inner glass shall be clear glass and outer glass shall be tinted heat reflecting with 10mm air gap including providing EPDM gasket, perforated aluminium spacers, dessicants, sealants (both primary & secondary sealant) etc. as per specifications, drawings & direction of Engineer-in-charge complete.	5	sqm	2741.55	13707.75
98	Providing and fixing 12 mm thick prelaminated particle board flat pressed three layer or graded wood particle board conforming to IS: 12823 Grade I Type ll, in panelling fixed in aluminum doors, windows shutters and partition frames with C.P. brass / stainless steel screws etc. complete as per architectural drawings and directions of Engineer-in-charge. Pre-laminated particle board with decorative lamination on both sides	5	sqm	755.05	3775.25
99	Providing and fixing 19mm thick Pre-laminated flat pressed 3 layer (medium density) particle board or graded wood particle board IS : 3087 marked, with one side decorative and other side balancing lamination Grade I, Type II exterior grade IS : 12823 marked, in shelves with screws and fittings wherever required, edges to be painted with polyurethane primer including fittings, etc.. One side decorative and other side balancing lamination Grade I	3	sqm	864.18	2592.54
100	Providing and fixing glazing in aluminium/UPVC door, window, ventilator shutters and partitions etc. with EPDM rubber / neoprene gasket etc. complete as per the architectural drawings and the directions of Engineer-in-charge. (Cost of aluminium snap beading shall be paid in basic item): With float glass panes of 4 mm thickness.	4	sqm	664.04	2656.16
101	Providing and fixing glazing in aluminium/UPVC door, window, ventilator shutters and partitions etc. with EPDM rubber / neoprene gasket etc. complete as per the architectural drawings and the directions of Engineer-in-charge. (Cost of aluminium snap beading shall be paid in basic item): With float glass panes of 6 mm thickness.	4	sqm	886.51	3546.04
102	Providing and fixing glazing in aluminium/UPVC door, window, ventilator shutters and partitions etc. with EPDM rubber / neoprene gasket etc. complete as per the architectural drawings and the directions of Engineer-in-charge. (Cost of aluminium snap beading shall be paid in basic item):With toughened glass panes of 6 mm thickness.	2	sqm	1239.41	2478.82
103	Providing and fixing anodised aluminium grill (anodised transparent or dyed to required shade according to IS: 1868 with minimum anodic coating of grade AC 15) of approved design/pattern, with approved standard section and fixed to the existing window frame with C.P. brass/ stainless steel screws @ 200 mm centre to centre, including cutting the grill to proper opening size for fixing and operation of handles and fixing approved anodised aluminium standard section around the opening, all complete as per requirement and direction of Engineer-in-charge. (Only weight of grill to be measured for payment).	10	kg	355.37	3553.70
104	Providing and fixing double action hydraulic floor spring of approved brand and manufacture conforming to IS : 6315, having brand logo embossed on the body / plate with double spring mechanism and door weight upto 125 kg, for doors, including cost of cutting floors, embedding in floors as required and making good the same matching to the existing floor finishing and cover plates with brass pivot and single piece M.S. sheet outer box with slide plate etc. complete as per the direction of Engineer-in-charge. With stainless steel cover plate minimum 1.25 mm thickness	2	each	1777.08	3554.16
105	Providing M.S. foot rests including fixing in manholes with 20x20x10 cm cement concrete blocks 1:3:6 (1 cement : 3 coarse sand : 6 graded stone aggregate 20 mm nominal size) as per standard design : With 20x20 mm square bar	8	each	250.61	2004.88
106	Providing and fixing on wall face unplasticised Rigid PVC rain water pipes conforming to IS : 13592 Type A, including jointing with seal ring conforming to IS : 5382, leaving 10 mm gap for thermal expansion, (i) Single socketed pipes: 110 mm diameter.	20	meter	211.92	4238.40
107	Providing and fixing on wall face unplasticised - PVC moulded fittings/ accessories for unplasticised Rigid PVC rain water pipes conforming to IS : 13592 Type A, including jointing with seal ring conforming to IS : 5382, leaving 10 mm gap for thermal expansion: Coupler - 110 mm	10	each	91.08	910.80
108	Providing and fixing on wall face unplasticised - PVC moulded fittings/ accessories for unplasticised Rigid PVC rain water pipes conforming to IS : 13592 Type A, including jointing with seal ring conforming to IS : 5382, leaving 10 mm gap for thermal expansion: Bend 87.5° - 110 mm	10	each	99.94	999.40
109	Providing and fixing on wall face unplasticised - PVC moulded fittings/ accessories for unplasticised Rigid PVC rain water pipes conforming to IS : 13592 Type A, including jointing with seal ring conforming to IS : 5382, leaving 10 mm gap for thermal expansion: Shoe (Plain) - 110 mm	5	each	87.15	435.75
110	Providing and fixing unplasticised-PVC pipe clips of approved design to unplasticised - PVC rain water pipes by means of 50x50x50 mm hard wood plugs, screwed with M.S. screws of required length, including cutting brick work and fixing in cement mortar 1:4 (1 cement : 4 coarse sand) and making good the wall etc. complete: 110 mm	10	each	175.15	1751.50
111	Providing and fixing to the inlet mouth of rain water pipe cast iron grating 15 cm diameter and weighing not less than 440 grams.	4	each	35.89	143.56
112	Providing & fixing Aluminium Luxalon (Hunter Douglas) Make Techstyle panel type false ceiling system including T grid, fasteners & fixtures, materials, scaffolding, leaving cut-out, etc. all complete as per customer's technical specification clause no 15.15 & direction of Engineer-in -Charge.	40	sqm	2666.19	106647.60
113	Providing and fixing thermal insulation with Resin bonded rock/mineral wool conforming to IS: 8183, density 48 kg/m3, 25 mm thick, wrapped in 100 G virgin black polythene bags placed over the false ceilng and held in position by criss- crossing Gl wire, etc. all complete as per customer's specification and direction of engineer-in charge.	40	sqm	104.41	4176.20

BILL OF QUANTITY CUM PRICE SCHEDULE

Name of Project	**400kV SWITCHYARD AT OPTCL DUBRI, PARADIP**
Name of Work	**CONSTRUCTION OF TOWER & EQUIPMENT FOUNDATIONS, PANEL ROOM, REACTOR,ROAD, TRENCH, DRAIN, METAL SPREADING, FENCE & GATE, ETC.**

S. No.	Description of Item	Quantity	Unit	Unit Rate Excl GST (Rs)	Amount Excl GST (Rs)
114	Providing and fixing Resin Bonded glass wool insulation minimum 50 mm thick in aluminium foil backing shall be provided over false ceiling for thermal and acoustical insulation. The density of glass wool shall be 32 kg/cu.m (minimum) and shall conform to IS 8183. Maximum value shall be 1.0 W/sq.m/deg.C	40	sqm	173.67	6946.80
115	Providing and laying non-pressure NP2 class (light duty) RCC pipes with collars jointed with stiff mixture of cement mortar in the proportion of 1:2 (1 cement: 2 fine sand) including testing of joints etc., complete: 300mm dia. RCC pipe	30	metre	459.59	13787.70
116	Providing and laying non-pressure NP3 class (light duty) RCC pipes with collars jointed with stiff mixture of cement mortar in the proportion of 1:2 (1 cement: 2 fine sand) including testing of joints etc., complete: 100mm dia. RCC pipe	50	metre	744.33	37216.48
117	Providing and laying non-pressure NP3 class (light duty) RCC pipes with collars jointed with stiff mixture of cement mortar in the proportion of 1:2 (1 cement: 2 fine sand) including testing of joints etc., complete: 450mm dia. RCC pipe	15	metre	1660.11	24901.65
118	Providing and laying Non Pressure NP-4 class (Heavy duty) R.C.C. pipes including collars/spigot jointed with stiff mixture of cement mortar in the proportion of 1:2 (1 cement : 2 fine sand) including testing of joints etc. complete: 450 mm dia RCC pipes.	5	metre	1896.13	9480.66
119	Providing and fixing aluminium extruded section body tubular type universal hydraulic door closer (having brand logo with ISI, IS : 3564, embossed on the body, door weight upto 36 kg to 80 kg a), with double speed adjustment with necessary accessories and screws etc. complete.	2	each	336.80	673.60
120	Providing and fixing chromium plated brass 100 mm mortice latch and lock with 6 levers and a pair of lever handles of approved quality with necessary screws etc. complete.	2	each	590.20	1180.40
121	Providing and fixing chromium plated brass handles with necessary screws etc. complete: 125 mm	2	each	179.95	359.90
122	Providing and fixing chromium plated brass handles with necessary screws etc. complete: 100 mm	2	each	155.00	310.00
123	Providing and fixing ISI marked aluminium butt hinges anodised (anodic coating not less than grade AC 10 as per IS: 1868) transparent or dyed to required colour or shade with necessary screws etc. complete: 125x75x4 mm	4	each	101.98	407.92
124	Providing and fixing aluminium sliding door bolts, ISI marked anodised (anodic coating not less than grade AC 10 as per IS : 1868), transparent or dyed to required colour or shade, with nuts and screws etc. complete : 300x16 mm	2	each	184.35	368.70
125	Providing and fixing aluminium sliding door bolts, ISI marked anodised (anodic coating not less than grade AC 10 as per IS : 1868), transparent or dyed to required colour or shade, with nuts and screws etc. complete : 250x16 mm	3	each	164.68	494.04
126	Providing and fixing aluminium tower bolts, ISI marked, anodised (anodic coating not less than grade AC 10 as per IS : 1868) transparent or dyed to required colour or shade, with necessary screws etc. complete : 300x10 mm	4	each	85.64	342.56
127	Providing and fixing aluminium tower bolts, ISI marked, anodised (anodic coating not less than grade AC 10 as per IS : 1868) transparent or dyed to required colour or shade, with necessary screws etc. complete : 250x10 mm	2	each	75.81	151.62
128	Providing and fixing aluminium handles, ISI marked, anodised (anodic coating not less than grade AC 10 as per IS : 1868) transparent or dyed to required colour or shade, with necessary screws etc. complete : 125 mm	2	each	43.86	87.72
129	Providing and fixing aluminium handles, ISI marked, anodised (anodic coating not less than grade AC 10 as per IS : 1868) transparent or dyed to required colour or shade, with necessary screws etc. complete : 100 mm	2	each	38.77	77.54
130	Providing and fixing aluminium hanging floor door stopper, ISI marked, anodised (anodic coating not less than grade AC 10 as per IS : 1868) transparent or dyed to required colour and shade, with necessary screws etc. complete: Twin rubber stopper	2	each	32.53	65.06
131	Demolishing R.C.C. work manually/ by mechanical means including stacking of steel bars and disposal of unserviceable material within 50 metres lead as per direction of Engineer - in- charge.	5	cum	1454.54	7272.70
132	Demolishing brick work in cement mortar manually/ by mechanical means including stacking of serviceable material and disposal of unserviceable material within 50 metres lead as per direction of Engineer-in-charge.	5	cum	842.73	4213.65
133	Providing and Placing in position suitable PVC water stops conforming to IS:12200 for construction/ expansion joints between two RCC members and fixed to the reinforcement with binding wire before pouring concrete etc. complete : Serrated with central bulb (225 mm wide, 8-11 mm thick)	500	metre	216.54	108270.00
134	Fixing (all dia & length) foundation bolts in position with help of proper templates (template to be supplied by contractor) including nuts and washers without any tilt until completion of concrete, checking the alignment for various structures including cost of template, labour, lead lifts etc., all complete as per specs, drawings & directions of Engr-in-Charge. (Foundation bolts shall be supplied by BHEL). Note:- Weight of foundation bolts including nuts & washers only shall be measured for payment purpose.	15000	Kg	8.52	127800.00
135	Fabricating, galvanising & supplying of foundation bolts manufactured with steel of various sizes as per drawing with 3 Nos GI nuts including welding a plate of size 100x100x12mm thick at the bottom of bolt including cost of materials, labour, lead lift, galvanisation, etc. complete (sample to be approved by Department Engineer at site) as per standard specification. Galvanisation shall be 610 gm/sqm. Note:- Weight of foundation bolts including nuts & washers only shall be measured for payment purpose. Fixing charges shall be paid in the respective item.	100	Kg	143.20	14320.00

BILL OF QUANTITY CUM PRICE SCHEDULE

Name of Project	**400kV SWITCHYARD AT OPTCL DUBRI, PARADIP**
Name of Work	**CONSTRUCTION OF TOWER & EQUIPMENT FOUNDATIONS, PANEL ROOM, REACTOR,ROAD, TRENCH, DRAIN, METAL SPREADING, FENCE & GATE, ETC.**

S. No.	Description of Item	Quantity	Unit	Unit Rate Excl GST (Rs)	Amount Excl GST (Rs)
136	Providing and laying integral cement based water proofing treatment including preparation of surface as required for treatment of roofs, balconies, terraces etc consisting of following operations: (a) Applying a slurry coat of neat cement using 2.75 kg/sqm of cement admixed with water proofing compound conforming to IS. 2645 and approved by Engineer-in-charge over the RCC slab including adjoining walls upto 300 mm height including cleaning the surface before treatment. (b) Laying plain cement concrete 1:5:10 (1 cement : 5 fine sand : 10 burnt brick aggregate of 40mm nominal size) admixed with proprietary water proofing compound conforming to IS : 2645 and approved by Engineer-in-charge over 20 mm thick layer of cement mortar of mix 1:5 (1 cement :5 coarse sand) admixed with proprietary water proofing compound conforming to IS : 2645 and approved by Engineer-in-charge to required slope and treating similarly the adjoining walls upto 300 mm height including rounding of junctions of walls and slabs. (c) After two days of proper curing applying a second coat of cement slurry using 2.75 kg/ sqm of cement admixed with proprietary water proofing compound conforming to IS : 2645 and approved by Engineer-in-charge. (d) Finishing the surface with 20 mm thick jointless cement mortar of mix 1:4 (1 cement :4 coarse sand) admixed with proprietary water proofing compound conforming to IS : 2645 and approved by Engineer-in-charge including laying glass fibre cloth of approved quality in top layer of plaster and finally finishing the surface with trowel with neat cement slurry and making pattern of 300x300 mm square 3 mm deep. (e) The whole terrace so finished shall be flooded with water for a minimum period of two weeks for curing and for final test. All above operations to be done in order and as directed and specified by the Engineer-in-Charge : With average thickness of 120 mm and minimum thickness at khurra as 65 mm.	50	sqm	954.20	47710.00
137	Making khurras 45X45cm with average minimum thickness of 5cm cement concrete 1:2:4 (1 cement: 2 coarse sand: 4 graded stone aggregate of 20mm nominal size) over PVC sheet 1mX1mX400micron, finished with 12mm cement plaster 1:3 (1 cement: 3 coarse sand) and a coat of neat cement rounding the edges and making and finishing the outlet complete.	2	each	178.17	356.34
138	Preparation and consolidation of sub grade with power road roller of 8 to 12 tonne capacity after excavating earth to an average of 22.5 cm depth,dressing to camber and consolidating with road roller including making good the undulations etc and re-rolling the sub grade and disposal of surplus earth lead upto 50 metres.	1400	sqm	90.09	126126.00
139	Extra for compaction of earthwork in embankment under optimum moisture conditions to give at least 95% of the maximum dry density (Proctor density)	1400	sqm	10.70	14980.00
140	Suppling and stacking at site: 90 mm to 45 mm size stone aggregate	220	cum	1278.69	281311.80
141	Suppling and stacking at site: 63 mm to 45 mm size stone aggregate	240	cum	1386.53	332767.20
142	Suppling and stacking at site: 53 mm to 22.5 mm size stone aggregate	220	cum	1475.02	324505.06
143	Suppling and stacking at site: Stone screening 13.2 mm nominal size (type A)	135	cum	1439.66	194354.10
144	Suppling and stacking at site: Stone screening 11.2 mm nominal size (type B)	50	cum	1398.19	69909.50
145	Suppling and stacking at site: moorum	50	cum	563.01	28150.50
146	Laying, spreading and compacting stone aggregates of specified sizes to WBM specifications in uniform thickness, hand picking, rolling with 3-wheeled road / vibratory roller 8-10 tonne capacity in stages to proper grade and camber, applying and brooming requisite type of screening/ binding materials to fill up interstices of coarse aggregate, watering and compacting to the required density etc., all complete. (Payment will be made for compacted layers only. Stone aggregates, screenings & moorum to be paid separately). Subbase with stone aggregate 90mm to 45mm including stone screening 13.2mm size and moorum/blinding material.	165	cum	449.09	74099.85
147	Laying, spreading and compacting stone aggregates of specified sizes to WBM specifications in uniform thickness, hand picking, rolling with 3-wheeled road / vibratory roller 8-10 tonne capacity in stages to proper grade and camber, applying and brooming requisite type of screening/ binding materials to fill up interstices of coarse aggregate, watering and compacting to the required density etc., all complete. (Payment will be made for compacted layers only. Stone aggregates, screenings & moorum to be paid separately). Base course with stone aggregate 63mm to 45mm including stone screening 13.2mm sizeand moorum/blinding material.	180	cum	449.09	80836.20
148	Laying, spreading and compacting stone aggregates of specified sizes to WBM specifications in uniform thickness, hand picking, rolling with 3-wheeled road / vibratory roller 8-10 tonne capacity in stages to proper grade and camber, applying and brooming requisite type of screening/ binding materials to fill up interstices of coarse aggregate, watering and compacting to the required density etc., all complete. (Payment will be made for compacted layers only. Stone aggregates, screenings & moorum to be paid separately). Base course with stone aggregate 53mm to 22.4 mm including stone screening 11.2mm size and moorum/blinding material.	165	cum	449.09	74099.85
149	Providing and laying polythene sheet of 125 microns between the PCC and RCC slab in road/ pavement works all complete as per direction of Engineer-in-Charge)	1400	sqm	12.70	17780.00
150	Providing and laying 60mm thick factory made cement concrete interlocking paver block of M-30 grade made by block making machine with strong vibratory compaction, of approved size, design & shape, laid in required colour and pattern over and including 50mm thick compacted bed of coarse sand, filling the joints with fine sand etc. all complete as per the direction of Engineer-in-charge.	550	sqm	549.38	302159.00

BILL OF QUANTITY CUM PRICE SCHEDULE

Name of Project	**400kV SWITCHYARD AT OPTCL DUBRI, PARADIP**
Name of Work	**CONSTRUCTION OF TOWER & EQUIPMENT FOUNDATIONS, PANEL ROOM, REACTOR,ROAD, TRENCH, DRAIN, METAL SPREADING, FENCE & GATE, ETC.**

S. No.	Description of Item	Quantity	Unit	Unit Rate Excl GST (Rs)	Amount Excl GST (Rs)
151	Providing and laying at or near ground level factory made kerb stone of M-25 grade cement concrete in position to the required line, level and curvature, jointed with cement mortar 1:3 (1 cement: 3 coarse sand), including making joints with or without grooves (thickness of joints except at sharp curve shall not to more than 5mm), including making drainage opening wherever required complete etc. as per direction of Engineer-in-charge (length of finished kerb edging shall be measured for payment). (Precast C.C. kerb stone shall be approved by Engineer-in-charge).	50	cum	4335.95	216797.50
152	Painting road kerb stone surface marking with adequate nos of coats to give uniform finish with ready mixed road marking paint conforming to IS:164, in white/yellow shade, including cleaning the surface of all dirt, scales, oil, grease and foreign material etc. complete: New work (Two or more coats)	400	sqm	129.94	51976.00
153	Supplying and filling stone aggregate of 40mm nominal size over grating for transformer/reactor foundation as per customer's technical specification & the direction of Engineer-in-charge.	50	cum	1239.78	61989.00
154	R R masonry in CM 1:5 using random rough stone and bond stone including cost of all materials, leads, lift and curing etc complete. For toe wall and retaining wall as per standard specification.	500	cum	3814.34	1907167.82
155	Dry stone pitching 22.5 cm thick including supply of stones and preparing surface complete.	100	sqm	491.76	49176.00
156	Providing, laying and compacting stone base under the floors/foundations as per direction of Engineer-in-Charge including supply of stones, consolidation and preparing surface complete.	50	cum	1638.80	81940.00
157	Providing and filling in position, blown bitumen in expansion joints.	1	cum	48989.00	48989.00
158	Providing and filling in position bitumen mix filler of Proportion 80 kg. of hot bitumen, 1 kg of cement and 0.25 cubic metre of coarse sand for depth per expansion joints.	1	cum	15984.00	15984.00
159	Providing and fixing in position 12mm thick bitumen impregnated fibre board conforming to IS: 1838, including the cost of primer, sealing compound Grade-A in expansion joints.	500	per cm depth per 100 m	430.30	215150.00
160	Providing and fixing in position pre moulded joint filler in expansion joints	100	per cm depth per cm width per m length	1.89	189.00
161	Providing and laying in position bitumen hot sealing compound for expansion joints etc.: Using grade A ceiling compound	100	per cm depth per cm width per m length	2.16	216.00
162	Providing and fixing G.I. chain link fabric fencing of required width in mesh size 50x50 mm including strengthening with 2 mm dia wire or nuts, bolts and washers as required complete as per the direction of Engineer-in-charge. Made of G.I. wire of dia. 4 mm, PVC coated to achieve outer dia not less than 5 mm in required colour and shade	235	sqm	541.31	127207.85
163	Fabricating, galvanising, supplying & erection of fence post & frame manufactured with steel tube, angle, flat, etc., including supply & erection of hot dip galvanized bolts, nuts & washers, cost of materials, labour, lead, lift, galvanisation, etc. all complete as per drawing & customer's technical specification. Galvanisation shall be 615 gm/sqm. Note:- G.I. Chain Link Fabric shall be measured & paid separately.	2400	kg	87.60	210240.00
164	Providing and fixing GI steel rungs/structure parts in concrete/brick walls/the water retaining structures having zinc coating of minimum 750 g/sqm etc. all complete as per customer's specification. The minimum coating of the zinc shall comply with IS:2629 and IS:2633. Galvanizing shall be checked and tested in accordance with IS:2629. The galvanizing shall be followed by the application of an etching primer and dipping in black bitumen.	20	kg	91.65	1832.92
165	Grouting of block outs, pockets, foundations, bolts holes and underside of base plates with cement, sand aggregate (of size 6 mm and down) grout M-30 with non-shrink additive and shall be of strength not less than M30 including placing, curing, cleaning, surface preparation, testing, etc. complete with labour, materials, equipment, handling, testing, etc. all complete as per specifications, drawings and instructions of the Engineer.	5	cum	10960.58	54802.90
166	Antiweed treatment in switchyard area including micro leveling (earthwork cutting & filling upto ±200mm), dressing, compaction, effectiveness test of antiweed chemical, etc all complete as per Technical Specification and instruction of Engineer-in-charge including cost of all labour, materials, T&P, etc.	18000	sqm	17.26	310680.00
167	Supplying and laying two layers of machine crushed metals (gravel) in switchyard over yard PCC as per drawing, technical specification and instruction of Engineer-in-charge, all complete including cost of all labour, materials, T&P, etc. but excluding the cost of PCC. Each layer shall have uniformly consolidated/ compacted thickness of 50mm (minimum). The first or base layer shall be of machine crushed 20mm nominal size of metals (gravel) above the yard PCC. Second or final layer shall be of machine crushed 20mm nominal size of metals (gravel) above the first layer. The total compacted thickness of the metals (20 mm Nominal) shall be100mm uniformly.	1800	cum	1403.77	2526786.00
168	Construction of Rain Water Harvesting as per Technical Specification and Drawings including all labour, material, tools, tackles, equipments, safeguards & incidentals as necessary as per customer's Technical Specification and direction - of - Engineer -in-charge.	1	Nos	258053.25	258053.25

BILL OF QUANTITY CUM PRICE SCHEDULE

Name of Project	**400kV SWITCHYARD AT OPTCL DUBRI, PARADIP**
Name of Work	**CONSTRUCTION OF TOWER & EQUIPMENT FOUNDATIONS, PANEL ROOM, REACTOR,ROAD, TRENCH, DRAIN, METAL SPREADING, FENCE & GATE, ETC.**

S. No.	Description of Item	Quantity	Unit	Unit Rate Excl GST (Rs)	Amount Excl GST (Rs)
169	Providing & planting 100 nos fruit bearing plants and 100 nos other show plants at different loactions and near control room building including treatment of the soil and manuring before plantation of the plants, water taps with drip water irrigation system at different locations, water pipes, are to be provided for watering the plants, etc. all in complete as per customer's Technical Specification & instruction of the Engineer-in-charge. The contractor shall submit the development & plantation plan to the Engineer-in-charge for necessary instructions before start of the work.	200	each	199.98	39995.00
170	Extra for providing additional zinc coating of 100 gms/sqm on above of 610gms/sqm the steel structures	200	kg	2.89	578.00
171	Dismantling of structural steel material of fencing post/struts, stacking of servicable materia to a lead of 50 metres and disposable of unservicable material upto a lead of 2 km including supply of labour,providing of tools and plants,cutting, welding etc. all complete as per drawing, specification and instruction of engineer in charge:	25	Each	1301.00	32525.00
172	Dismantling of existing chain link fence including dismantling of posts etc and re-erection of the same as per direction of site-in-charge. (The rate shall be exclusive of Concrete but inclusive of earthwork, brickwork, plaster, cement painting & shuttering and erection all complete)	100	RM	862.00	86200.00
173	Dismantling steel work in built up sections (truss, rafter, purlin etc.) in angles, tees, flats and channels including all gusset plates, bolts, nuts, cutting rivets, welding etc. including dismembering and stacking within 50 metres lead.	2000	kg	2.40	4800.00
174	Dismantling roofing including ridges, hips, valleys and gutters etc., and stacking the material within 50 metres lead of: G.S. Sheet	70	sqm	70.10	4907.00
				TOTAL	**46356057**

SECTION - 2

STANDARD TECHNICAL SPECIFICATION
(N.A.)

SECTION -3

ENCLOSURES TO THE SPECIFICATION

(a) Customer Specification

ODISHA POWER TRANSMISSION CORPORATION LIMITED

TECHNICAL SPECIFICATION

FOR

CIVIL WORKS

BHEL Transmission Business Group
Industry Sector
Noida-05

000287

CIVIL WORKS

TABLE OF CONTENTS

DESCRIPTION	PAGE NO.
1. GENERAL	4
2. SITE CLEARANCE	4
3. STANDARDS	5
4. SOIL INVESTIGATION	5
5. MATERIALS AND WORKMANSHIP	9
6. EXCAVATION AND BACKFILL	10
7. SITE SURFACING	12
8. SITE DRAINAGE	12
9. SEWAGE SYSTEM	12
10. ROADS AND CULVERTS	15
11. AUTO TRANSFORMER / REACTOR FOUNDATION , RAIL TRACK / ROAD CUM RAIL TRACK	16
12. FIRE PROTECTION WALLS	17
13. CABLE AND PIPE TRENCHES	22
14. FOUNDATION DESIGN	24
15. FOUNDATIONS AND R.C.C. CONSTRUCTION	33
16. FENCING	35
17. BUILDING	42

BHEL Transmission Business Group
Industry Sector
Noida-05

18. MISCELLANEOUS GENERAL REQUIREMENTS 43

19. INTERFACING 43

20. WATER SUPPLY 43

21. STATUTORY RULES 44

22. SECURITY WATCH TOWERS 44

23. SECURITY SHED 44

4. STORE SHED,PLATFORM,RAMP & WINCH 44

25. ANTIWEED TREATMENT 45

26. GARDEN & PLANTATION 45

27. RAIN WATER HARVESTING 45

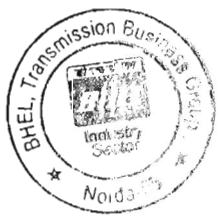

1. GENERAL

1.1 Scope of work

The scope of Civil works includes the following items.

The scope shall generally cover switch yard structures, including gantries and equipment support structures and their foundations, cable trenches along with covers, cable trench crossings of road and rails, sump pits, marshalling box/control cubicle foundations, switch yard levelling, site clearance, soil investigation, roads, drains, fencing, gravel filling, transformer / reactor foundations, firewalls, control room building, other auxiliary buildings. Any other items, not specifically mentioned here but required for the commissioning of switch yard/substation shall be deemed to be included in the scope of this Specification. The scope shall further cover design, engineering, erection, testing and commissioning of all civil works at each substation. All civil works shall also satisfy the General Technical Clauses specified in other sections of this specification and as detailed below.

Excavation, de watering, carriage of excavated earth, plain cement concrete (PCC), casting of reinforced cement concrete (RCC) foundations, super-structures for switch yard structures, equipment supports, their control cubicles, bus post supports, lighting poles and panels, brick and stone masonry, cable trenches, pipe trenches with necessary pre cast RCC removable covers, with lifting facility and sump pits, cable supports and their embodiment in cable trenches and cable trench crossings road or rail track with backfilling complete as per drawings approved by the OPTCL, shall be carried out by the contractor. The cable trenches inside the control room shall be provided with MS chequered plate with angle stiffeners at the bottom for mechanical strength and painting there of as per the standard practice.

The Contractor shall furnish all designs, (unless otherwise specified) drawings, labour, tools, equipment, materials, temporary works, constructional plant and machinery, fuel supply transportation and all other incidental items not shown or specified but as may be required for complete performance of the Works in accordance with approved drawings, specifications and as per direction of the Engg Incharge (Divisional Engr.).

The work shall be carried out according to the design/drawings to be developed by the Contractor, and approved by the Engg Incharge (Divisional Engr.) or supplied to the bidder by the Engg Incharge (Divisional Engr.). For all buildings, structures, foundations etc. necessary layout, levels and details shall be developed by the Contractor keeping in view the functional requirement of the plant and facilities and providing enough space and access for operation, use and maintenance based on the input provided by the Engg Incharge (Divisional Engr.). Certain minimum requirements are indicated in this specification for guidance purposes only. However, the Bidder shall quote according to the complete requirements.

2. 0 SITE CLEARANCE

2.1 Clearing and Grubbing

The work shall consist of numbering of trees, removing and disposing of all materials such as trees, bushes, woods, shrubs, grass, stumps, rubbish, rank vegetation, roots, foreign materials, etc., which in the opinion of the Engg Incharge (Divisional Engr.) are unsuitable for incorporation in the works, from within the limits and such other areas as may be specified on the drawings or directed by the Engg Incharge (Divisional Engr.). Clearing and grubbing shall be performed in advance of earthwork operations and in accordance with the requirements of these Specifications. During clearing and grubbing, the contractor shall take all adequate precautions against soil erosion, water pollution etc., and where required undertake additional works to that effect.

2.1.1 Provision of plantation and developing a garden inside the sub-station

At least, 100 nos. of fruit bearing different type plants as decided by OPTCL to be planted along the road side and in and around the control room, DG room ,FF&PH building and other building area after making surface treatment. Also, provision of developing a garden in front of the control room building or any suitable area and shall be of size as decided as per the availability of land. Garden grass, variety of flowering plants and decorative plants etc are to be provided after making proper surface treatment. Provision of water taps facilities at different locations for watering the plants. **Land scaping & provision for platform for hoisting of National Flags and** Provision of water tap with water sprinkler arrangement including water pipe laying with control at different location. Both side of the RCC roads shall also be provided with decorative plants as per the instruction of the Site Engineer. Adequate quantity of different varieties of

BHEL Transmission Business Group BHEL Industry Sector Noida-05

plants to be considered in consultation with Horticulturists & Owner Construction of a platform with suitable GI pipe & other attachment for hoisting of National Flags As per the direction of Engineer in charge.

2.2 Setting out and making profiles

After the site has been cleared as per Clause 2.1 above, the limits of excavation shall be set out true to lines, curves, slopes, grades and sections as shown on the drawings or as directed by the Engg Incharge (Divisional Engr.). The Contractor shall provide all labour, survey instruments and materials such as strings, pegs, nails, bamboos, stones, lime, mortar, concrete, etc., required in connection with the setting out of works and the establishment of bench marks. A grid system of co-ordinates shall be established by the Contractor at the site.

Masonry or concrete pillars shall be erected suitably at minimum of four places in the area to serve as bench marks for the execution of the work. Each bench mark shall be protected from damage or disturbance. These bench marks shall be connected with G.T.S. of any other permanent bench mark approved by the Engg Incharge (Divisional Engr.). Necessary profiles with pegs, bamboos and strings or "Burjis" shall be made to show the correct formation levels before the work is started and the same shall be approved by the Engg Incharge (Divisional Engr.).

2.3 Programme

The Contractor shall construct the works in compliance with the outline programme appended to the Bidding Document, nd shall submit for the approval of the Engg Incharge (Divisional Engr.) a detailed programme in accordance with the requirements of this Specification

2.4 Inclement weather

As per relevant Code, during hot weather, precautions shall be taken to avoid premature stiffening of the fresh mix and to reduce water absorption and evaporation losses. During hot weather (atmospheric temperature above 40 degree C) or cold weather (atmospheric temperature at or below 5deg.C) concreting shall be done as per the procedure set out in IS 7861.

3.0 STANDARDS

All Civil works shall be carried out as per applicable Indian Laws, latest revision of International Standards and Codes. All materials shall be of best quality confirming to relevant Indian Standards and Codes.

Civil works shall be designed to the required service conditions and /or loads as specified elsewhere in this Specification or implied as per National and International Standards.

A list of code of practice and standards used for civil works in general is enclosed for reference In case of any conflict between I.S. Code and the Procedures specified herein, the later shall prevail.

SOIL INVESTIGATION

3.1 General

The Contractor shall perform a detailed soil investigation to arrive at sufficiently accurate general as well as specific information about the soil profile/strata and the necessary soil parameters of the site in order that the foundations of the various structures can be designed and constructed safely and rationally Foundation systems adopted by the contractor shall ensure that relative settlement shall be as per provision in IS 1904 and any latest IS and other Indian Standards.

This Specification covers all the work required for detailed soil investigation and preparation of a detailed report The work shall include mobilisation of necessary equipment, provision of necessary engineering supervision and technical personnel, skilled and unskilled labour etc., as required to carry out field investigation and tests, laboratory tests, analysis and interpretation of data and results, preparation of detailed soil report including specific recommendations for the type of foundations and the safe bearing capacity for different sizes of foundations at different founding strata for the various structures of the substation. The Contractor shall make his own arrangements for locating the coordinates and various test positions in field and also for determining the reduced level of these locations with respect to the bench mark .All the test are to be carried out before the OPTCL officials or before any agency engaged by OPTCL Prior information in this effect has to be given to OPTCL.

BHEL Transmission Business Group
Industry Sector
Noida-05

A report to the effect will be submitted by the Contractor for the Engg Incharge (Divisional Engr.) specific approval giving details regarding his assumed data for Civil structures design.

Any variation in soil data shall not constitute a valid reason for any additional cost and shall not affect the terms and condition of the Contract. Nothing extra what so ever shall be paid to the Contractor on account of any variation in subsoil properties or conditions. Tests must be conducted under all the critical locations i.e. Control room building, auto/power transformer, reactor, lightning mast, 400 kV /220 kV/ 132 kV column location etc. However, some of the soil parameters given below for substations have to be determined and submitted to Engg Incharge (Divisional Engr.).

- Dry density
- Bulk density
- Angle of internal friction/cohesion

* Specific gravity

- Natural moisture content.

3.2 Bore holes

Drilling of a specified number of bore holes of 150 mm dia. in accordance with the provisions of IS 1892 at approved locations to specified depths or to refusal whichever occurs earlier. (By refusal it shall mean that a standard penetration blow count (N) of 100 is recorded for 30 cm penetration). However, at least 5 boreholes or as specified in BOQ shall be drilled to the required depth (15 mts. approximately).

Performing Standard Penetration Tests at approximately 2.0 m intervals in the bore hole starting from 0.5 m below ground onwards and at every change of stratum. The disturbed samples from the standard penetrometer shall also be collected for necessary tests.

Collecting undisturbed samples of 100/75 mm diameter 450 mm long from the bore holes at intervals of 2.5 m and every change of stratum starting from 1.0 m below ground level onwards.

The depth of Water Table shall be recorded in each bore hole

All samples, both disturbed and undisturbed, shall be identified properly with the bore hole number and depth from which they have been taken. The sample shall be sealed at both ends of the sampling tubes with wax immediately after the sampling and shall be packed properly and transported to the Contractor's laboratory without any damage or loss.

The logging of the bore holes shall be compiled immediately after the boring is completed and a copy of the borelog shall be handed over to the Engg Incharge (Divisional Engr.).

3.3 Dynamic cone penetration test

Two Dynamic cone penetration tests under the locations of auto transformers shall be carried out with the circulation of bentonic slurry at specified location and a continuous record of penetration resistance (NG) upto 15 metre from natural ground level or refusal, shall be maintained by the Contractor

Dynamic cone penetration tests are conducted to correlate engineering properties such as stratification density, bearing capacity, settlement, etc., of soils which are primarily cohesive in nature. The tests shall be conducted by driving a standard size cone attached loosely or screwed to a string of drill rods. The specification for the equipment and accessories required for performing this test, test procedure, field observations and reporting of results shall confirm to IS 4968 part II latest revision. The driving system shall comprise of 65 kg weight having a free fall of 75 cm. The cone size shall be 65 mm diameter, and provided with vents for continuous flow of bentonite slurry through the cone and rods in order to avoid friction between the rods and soil. The location for tests shall be as directed by the Engg Incharge (Divisional Engr.). On completion of the test, the results shall be presented as a continuous record as the number of blows required for every 300 mm penetration of the cone into the soil.

3.4 Trial pits

Trial pits shall be made at two locations as approved by the Engg Incharge (Divisional Engr.). The trial pits shall two metres square in size extending to (four) metres depth or as specified by the Engg Incharge (Divisional Engr.). Undisturbed samples shall be taken from the trial pits as per the direction of the Engg Incharge (Divisional Engr.).

BHEL, Transmission Business Group, Industry Sector, Noida-05

3.5 Field California Bearing Ratio test

This test shall be carried out to obtain the properties of soil required for the construction of roads. The equipment and accessories required for carrying out the test, test procedure, recording of observations and presentation of results shall confirm to IS 2720 part **XXXI.** The test locations of CBR test shall be on the road locations as per GA drawing. These tests shall be performed on remoulded and undisturbed, soaked and un soaked samples.

3.6 Electrical resistivity test.

This test shall be conducted to determine the electrical resistivity of soil required for designing safety grounding system for the entire station area. The specifications for the equipment and other accessories required for performing electrical resistivity test, the test procedure, and reporting of field observations shall confirm to IS 3043. The test shall be conducted using Wagner's four electrode method as specified in IS 1892, Appendix-B2. Unless otherwise specified at each test location, the test shall be conducted along two perpendicular lines parallel to the coordinate axis.

3.7 Plate load test

Plate load test shall be conducted to determine the bearing capacity and load/ settlement characteristics of soil at shallow depths by loading a plane and level steel plate kept at the desired depth and measuring the settlement under different loads, until a desired settlement takes place or failure occurs. The specification for the equipment and accessories required for conducting the test, the test procedure, field observations and reporting of results shall conform to IS 1888. The location and depth of the test shall be given by the Contractor and approved by the Engg Incharge (Divisional Engr.). Undisturbed tube samples shall be collected at 1.0 m and 2.5 m depths from the natural ground level for carrying out laboratory tests.

The size of the pit shall not be less than five times the plate size and shall be taken upto the specified depth. All provisions regarding excavation and visual examination of pit shall apply here.

If the ground water table is at a depth higher than the specified test depth, the ground water table shall be lowered and maintained at the test depth for the entire duration of the test. Dewatering shall be at Contractor's cost.

Unless othewise specified the reaction method of loading shall be adopted. Settlement shall be recorded from dial guages placed at four diametrically opposite ends of the test plate. The test plate shall be 600 x 600 mm size and at least 25mm thick. The bottom of the pit shall be levelled before placing the plate in position for conducting the test.

A seating load of 70 gm/sq.cm shall be applied and after the dial gauge readings are stabilised, the load shall be released and the intital readings of the dial gauges recorded after they indicate constant reading. The load shall be increased in stages. These stages shall be 20, 40, 70, 100, 150, 200, 250, 300, 400, 500, 600 and 800 KN per sq.m. or as directed by the Engg Incharge (Divisional Engr.). Under each loading stage, record of time versus settlement shall be kept as specified in IS 1888.

The load shall be maintained for a minimum duration of one hour or till the settlement rate reduces to 0.02 mm/m, whichever is later. No extrapolation of settlement rate from periods less than one hour shall be permitted.

Loading shall be carried out in stages as specified above till one of the following conditions occurs:

- Failure of the soil under the plate i.e. the settlement of the plate at constant load becomes progressive and reaches a value of 40 mm or more
- Total settlement of the plate is more than 40mm.
- Load intensity of 800 kN/sq.m is reached without failure of the soil

Backfilling of the pit shall be carried out as per the directions of the Engg Incharge (Divisional Engr.). Unless otherwise specified the excavated soil shall be used for this purpose. The quoted rates shall include backfilling.

Dial gauge readings for settlement shall generally be taken at 1, 2, 4, 6, 9, 16, 25, 60, 90 and 120 minutes from the commencement of each stage of loading. Thereafter the readings shall be taken at hourly intervals upto a further four hours and at two hours intervals thereafter for another six hours.

BHEL Transmission Business Group
Industry Sector

3.8 Water sample

Representative samples of ground water shall be taken when ground water is first encountered before the addition of water to aid drilling of boreholes. The samples shall be of sufficient quantity for chemical analysis to be carried out and shall be stored in air-tight containers.

3.9 Laboratory Test

The laboratory tests shall be carried out progressively during the field work after a sufficient number of samples have reached the laboratory, in order that the test results of the initial bore holes can be made use of in planning the later stages of the field investigation and quantum of laboratory tests.

All samples brought from field, whether disturbed or undisturbed shall be extracted/prepared and examined by competent technical personnel and the tests shall be carried out as per the procedures laid out in the latest edition of the relevant IS Codes and Standards.

The following laboratory tests shall be carried out:

- Visual and engineering classification.
- Liquid limit, plastic limit and and shrinkage limit.
- Natural moisture content, bulk density, dry density and specific gravity.
- Grain size distribution.
- Unconfined compression test.
- Unconsolidated undrained test.
- Swell pressure and free swell index determination.
- California bearing ratio.
- Consolidated undrained test.
- Consolidated drained test
- Chemical tests on soil and water to determine the carbonates, sulphates, nitrates, chlorides, Ph value, and organic matter and any other chemicals harmful to the concrete foundation.

3.10 Test results and reports

The Contractor shall submit the detailed report in four (4) copies wherein information regarding the geological detail of the site, summarised observations and test data, bore logs, and conclusions and recommendations on the type of foundations with supporting calculations for the recommendations. Initially the report shall be submitted by the Contractor in draft form and after the draft report is approved, the final report in eight (8) copies shall be submitted.

The report shall include, but not be limited to the following :

- A plan showing the locations of an exploration work i.e. bore holes, dynamic cone penetration tests, trial pits, plate load test, etc.
- Bore logs: Bore logs of each bore holes,clearly identifying the stratification and type of soil stratum with depth upto the refusal. The values of Standard Penetration Test (SPT) at the depths where the tests were conducted on the samples collected shall be clearly shown against that particular stratum.
- Test results of field and laboratory shall be summarised strata wise as well in combined tabular form. All relavant graphs, charts tables, diagrams and photographs, if any, shall be submitted along with report.
- **Recommendation** The report should contain specific recommendations for the type of foundation for the various structures envisaged at site. The Contractor shall acquaint himself about the type of structures and their functions from the Engg Incharge (Divisional Engr.). The observations and recommendations shall include but not be limited to the following .

• Geological formation of the area, past observations or historical data, if available, for the area and for the structures in the nearby area, fluctuations of water table, etc.,

BHEL, Transmission Business Group
BHEL
Industry Sector
Noida-05

- Recommended type of foundations for various structures. If piles are recommended the type, size and capacity of pile shall be given.

- Allowable bearing pressure on the soil at various depths for different sizes of the foundations based on shear strength and settlement characteristics of soil with supporting calculations for the recommendations.

- Recommendations regarding slope of excavations and dewatering schemes, if required.

- Comments on the chemical nature of soil and ground water with due regard to protective measures.

- If expansive soil is met with, recommendation on removal or retainment of the same under the structure/road etc. shall be given. In the latter case detailed specification of any special treatment required including specification for materials to be used, construction method and equipment to be deployed etc. shall be furnished.

- Recommendations for additional investigation beyond the scope of the present work, if Contractor considers such investigation necessary.

4. 0 MATERIALS AND WORKMANSHIP

4.1 General

All materials used in the works shall be new and of the best quality of their respective kinds. They shall comply with the requirements of the latest edition of any relevant Indian Standard or Code of Practice where such exist, and current at the date of tendering.

All workmanship shall be of the highest standard, and shall be executed by competent men skilled in their respective trades.

4.2 Samples

In addition to the special provisions made in this specification for sampling and testing of materials by particular methods, samples of any materials and workmanship proposed to be used in the Works may be called for at any time during the Contract by the Engg Incharge (Divisional Engr.) and shall be furnished by the Contractor without delay and at the expense of the Contractor. Samples when approved, shall be regarded as the acceptable standard, and any material or workmanship subsequently not complying with that standard shall be rejected and replaced by those of acceptable standard at the expense of the Contractor. Sample storage boxes shall be provided by the Contractor free of cost if requested by the Engg Incharge (Divisional Engr.).

4.3 Tests

Whenever considered desirable by the Engg Incharge (Divisional Engr.) Inspectors may be sent to manufacturer's or subcontractors' premises to test materials or supervise their manufacture

Where specified or requested the Contractor shall obtain from the manufacturer and send to the Engg Incharge (Divisional Engr.) certificates of test, proof sheets, mill sheets, etc., showing that materials have been tested in accordance with this Specification or the relevant Indian Standard.

Notwithstanding any tests which may be directed to be carried out at a manufacturer's and/or subcontractor's works, the Engg Incharge (Divisional Engr.) may carry out any tests or further tests he considers necessary or desirable after delivery of materials to the Site.

The Contractor shall provide all labour, equipment and facilities necessary for carrying out the tests both in works and on site

The cost of routine tests required by IS and this Specification shall be borne by the Contractor The cost of other tests shall be borne in accordance with the Conditions of Contract

4.4 Names of suppliers and copies of orders

If so required, and before ordering material of any description, the Contractor shall submit for approval the names of makers or suppliers proposed Copies of orders shall also be submitted if so required. The Engg Incharge (Divisional

BHEL, Transmission Business Group
Industry Sector

Engr.) may at any time withdraw his previously given approval to obtaining materials from any maker or supplier should such maker or supplier fail to supply materials of the specified quality or quantity in the requisite time.

4.5 Rejection of materials and workmanship

The Engg Incharge (Divisional Engr.) shall at any time have power to reject materials and workmanship not complying with this Specification or with the approved Drawings. Materials so rejected shall be immediately removed from site and replaced by materials of an approved standard at the expense of the Contractor. Rejected workmanship shall be broken out and replaced by work of an acceptable standard including the supply of new materials by the Contractor, at the expense of the Contractor, and without delay.

4.6 Explosives and Blasting

All rules under the Explosive Act or other local rules in force shall be fully observed. All blasting works shall be done in accordance with the stipulation contained in IS 4081. Written approval shall be obtained from the Engg Incharge (Divisional Engr.) before explosives are used for excavating foundations in rock and the Engg Incharge (Divisional Engr.) may impose conditions for their use. The Contractor shall be responsible for complying with local regulations concerning the use of explosives and for the safe-keeping and handling of explosives. Proper warning shall be given of all blasting operations. During operations involving the handling or use of explosives, the Contractor shall be responsible for the safety of personnel, Site Works and people or properties in the vicinity of the site. The Contractor shall make good at his own expense any damage caused by the use or mishandling of explosives.

5. 0 EXCAVATION AND BACKFILL

Excavation and backfill for foundations shall be in accordance with the relevant Code. The back fill around the foundations shall be compacted according to Clause 6.7 for Compaction.

Whenever water table is met during the excavation, it shall be dewatered and water table shall be maintained below the bottom of the excavation level during excavation, concreting and backfilling.

When embankments are to be constructed on slopes of 15% or greater, benches or steps with horizontal and vertical faces shall be cut in the original slope prior to placement of embankment material. Vertical faces shall measure not more than one metre in height.

Embankments adjacent to abutments, culverts, retaining walls and similar structures shall be constructed by compacting the material in successive uniform horizontal layers not exceeding 15 cm in thickness, (of loose material before compaction). Each layer shall be compacted as required by means of mechanical tampers approved by the Engg Incharge (Divisional Engr.). Rocks larger than ten centimetres shall not be placed in embankment adjacent to structures.

Earth embankments of roadways and site areas adjacent to buildings shall be placed in successive uniform horizontal layers not exceeding 20 cm in thickness in loose stage measurement and compacted to the full width specified. The upper surface of the embankment shall be shaped so as to provide complete drainage of surface water at all times.

5.1 Rock excavation

The rock to be excavated shall be classified under the following categories :

5.1.1 Ordinary rock

Rock which does not require blasting, wedging or similar means for excavation is considered as ordinary rock. This may be quarried or split with crowbars or pickaxes and includes lime stone, sand stone, hard laterite, hard conglomerate and reinforced cement concrete below ground level. It will also include rock which is normally hard requiring blasting when dry but can be excavated without blasting, wedging or similar means when wet. It may require light blasting for loosening materials, but this will not any way entitle the material to be classified as hard rock.

5.1.2 Hard Rock

Any rock or boulder for the excavation of which blasting is required, for example quartzite stone granite, basalt, reinforced concrete (reinforcement to cut through but not seperated from concrete) below ground level.

BHEL Transmission Business Group
BHEL
Industry Sector
Noida-05

5.1.3 Hard Rock (Blasting prohibited)

This shall cover any hard rock requiring blasting as described in above but where blasting is prohibited for any reason and excavation has to be carried out by chieselling, wedging or any other approved method.

5.1.4 Authority for classification

The classification of excavation shall be decided by the Engg Incharge (Divisional Engr.) and his decision shall be final and binding on the Contractor. Merely the use of explosives in excavation will not be considered as a reason for higher classification unless blasting is clearly necessary in the opinion of the Engg Incharge (Divisional Engr.).

5.2 Excavations for foundations and other purposes

Excavations shall be of the minimum sizes necessary for the proper construction of the works, and excavations shall not be kept open for periods longer than that reasonably required to construct the works. The Contractor shall take all precautions necessary to ensure that the bottoms of excavations are protected from deterioration and that the excavations are carried out in such a manner that adjacent foundations, pipes or such like are not undermined, damaged or weakened in any way. Any excavation taken out below the proper level without approval shall be made good at the expense of the Contractor using concrete or other material as directed.

All excavated materials obtained from excavation shall remain OPTCL's property. The useful portion shall be seperated from the useless one and deposited in regular stacks at places indicated and as directed by the Engg Incharge (Divisional Engr.).

5.3 Support of excavations

The Contractor shall be responsible for the stability of the sides of the excavations. Excavations shall be close timbered or sheeted, planked and strutted as and when necessary during the course of the work and shall ensure the safety of personnel working within them. If any slips occur, they shall, as soon as practicable, be made good in an approved manner at the expense of the Contractor. Shoring shall not be removed until the possibility of damaging the works by earth pressure has passed. No payment for shoring or timber left in shall be made, unless agreed in writing by the Engg Incharge (Divisional Engr.).

5.4 Works to be in dry

All excavations shall be kept free from water and the Contractor shall take whatever action is necessary to achieve this. Pumping, well pointing and other means necessary to maintain the excavations free from water shall be at the expense of the Contractor, and carried out in an approved manner

5.5 Backfill

As soon as possible after the permanent works are sufficiently hard and have been inspected and approved, backfill shall be placed where necessary and thoroughly consolidated in layers not exceeding two hundred (200) millimetres in depth

On completion of structures, the earth surrounding them shall be accurately finished to the line and grade as shown on the drawings. Finished surfaces shall be free of irregularities and depressions.

The soil to be used for back filling purposes shall be from the excavated earth or from borrow pits, as directed by the Engg Incharge (Divisional Engr.).

5.6 Disposal of surplus

Surplus excavated material not required or not approved for fill or backfill shall be loaded and deposited either on or off site as directed. The Contractor shall not delay disposal of surplus material after receipt of instructions from the Engg Incharge (Divisional Engr.). The contractor shall arrange to transport the excavated earth by mechanical transport not necessarily on Pucca roads. The soil so transported shall be stacked and levelled neatly and dressed. The location where the soil is to be stacked / disposed shall be as directed by the Engg Incharge (Divisional Engr.).

5.7 Compaction

The method and equipment used to compact the fill material to a density that will give the allowable soil bearing pressure required for the foundations, roads, etc. in each layer of fill material. Each layer of earth embankment when compacted

BHEL Transmission Business Group Industry Sector Noida-05

shall be as close to optimum moisture content (OMC) as practicable. Embankment material which does not contain sufficient moisture to obtain proper compaction shall be wetted. If the material contains an excess of moisture, then it shall be allowed to dry before rolling. The rolling shall begin at the edges overlaping half the width of the roller each time and progress to the center of the road or towards the building as applicable. Rolling will also be required on rockfills. No compaction shall be carried out in rainy weather.

At all times unfinished construction shall have adequate drainage. Upon completion of the road's surface course, adjacent shoulders shall be given a final shaping, true alignment and grade.

The density to which fill material shall be compacted shall be as per relevant IS and as per direction of Engg Incharge (Divisional Engr.). All compacted sand filling shall be confined as far as practicable. Backfilled earth shall be compacted to minimum 95% of the Standard Proctor's density at OMC. The subgrade for the roads and embankment filling shall be compacted to minimum 95% of the Standard Proctor's density at OMC.

5.8 Requirement for fill material under foundations

The thickness of fill material under the foundations shall be such that the maximum pressure from the footing, transferred through the fill material and distributed onto the original undisturbed soil will not exceed the allowable soil bearing pressure of the original undisturbed soil.

Where compacted fill is required it shall consist of suitable sand, or other selective inorganic material, subject to approval by the Engg Incharge (Divisional Engr.). The filling shall be done with locally available sand. The filled in sand shall be kept immersed in water for sufficient time to ensure compaction, if so desired by the Engg Incharge (Divisional Engr.).

6. 0 SITE SURFACING

6.1 Scope of Work

The contractor shall furnish all labour, equipment and materials required for complete performance of the work in accordance with the drawings, specification and direction of the Engg Incharge (Divisional Engr.).

6.2 General Requirement

The material required for site surfacing/gravel filling shall be free from all types of organic materials and shall be of standard approved quality, and as directed by the Engg Incharge (Divisional Engr.).

The Contractor shall furnish and install the site surfacing to the lines and grades as shown in the drawing and in accordance with the requirements and direction of the Engg Incharge (Divisional Engr.). The soil of the entire switchyard area shall be levelled before placing the site surfacing/gravel fill material. After all the structures and equipment have been erected and accepted the site shall be maintained to the lines and grades indicated in the drawing and rolled or compacted by using three ton roller with suitable water sprinkling to form a smooth and compact surface condition, which shall be matching with finished ground level of the switchyard area. After due compaction of the surface of the entire switchyard area shall be provided with plain cement concrete of 75 mm thickness after proper compaction, and antiweed treatment having cement concrete ratio 1:4:8. Care shall be taken for proper gradient for easy discharge of storm water.

After the PCC is applied and surface prepared to the required slope and grade a base layer of uncrushed/crushed broken gravel of 20 mm nominal size shall be spread, rolled and compacted by using 1/2 ton roller (30" width and 24" dia) with 4 to 5 passes and water sprinkling to form a minimum 50 mm layer on the designed finished formation level of the entire switchyard area.

As a final surface course minimum 50 mm. uniform layers of un crushed /crushed broken metals (gravel) of 20 mm. nominal size shall be spread over the base layer/course. This final surface course shall be applied in all areas exclusive of roadways and shall extend beyond the fenced area as indicated in the drawing. This surface course shall then be compacted by light roller using 1/2 ton steel roller (width 30" x dia 24") and 4 to 5 passes or any other means with water sprinkling as directed by the Engg Incharge (Divisional Engr.). Water shall be sprinkled in such a manner that bulking does not take place. The 20 mm. nominal size (for both layers) shall pass 100% through IS sieve designation 37.5 mm and nothing through 16.0 m.m. IS sieve.

BHEL Transmission Business Group
BHEL
Industry Sector
Noida-05

In areas that are considered by the Engg Incharge (Divisional Engr.) to be too congested with foundations and structures for proper rolling of the site base course material by normal rolling equipments, the material shall be compacted by hand, if necessary. Due care shall be exercised so as not to damage any foundation structure or equipment during rolling or compaction.

Engg Incharge (Divisional Engr.) by no means shall relieve the contractor of their contractual obligations as stipulated in General and Special Conditions of Contract.

6.3 Measurements

7.2.1 Payment of gravel filling

The measurement shall be based on square metre of finished area of minimum specified compacted thickness of 100 mm above finished ground level. Nothing shall be paid extra for any additional material labour etc. used for achieving the specified compacted thickness of 100 mm. above finished ground level.

7. 0 SITE DRAINAGE

7.1 General

Adequate site drainage system shall be provided by the Contractor. The Contractor shall obtain rainfall data and design the storm water drainage system. (culverts, ditches, drains etc.) to accommodate the most intense rainfall that is likely to occur over the catchment area in one hour period on an average of once per ten years. The surfaces of the site shall be sloped to prevent the ponding of water.

The maximum velocity for pipe drains and open drains shall be limited to 2.4m/sec and 1.8m/sec respectively. However, minimum non silting velocity of 0.6m/sec shall be ensured. Longitudinal bed slope not milder than 1 1000 shall be provided.

For design of RCC pipes for drains and culverts, IS 456 and IS 783 shall be followed.

The Contractor shall ensure that water drains are away from the site area and shall prevent damage to adjacent property by this water. Adequate protection shall be given to site surfaces, roads, ditches, culverts, etc., to prevent erosion of material by water.

The drainage system shall be adequate without the use of cable or pipe trenches.

For pipe drains, concrete pipes of class NP2 shall be used. However, for road crossings higher strength pipe of class NP3 shall be provided. For rail crossings, pipes conforming to railway loading standards or at least NP4 class shall be provided. Manholes shall be provided at 30 m intervals, at connection points and at every change of alignment. All manholes deeper than 1.2 m shall be provided with galvanised M.S. foot rests. Foot rests shall be of 20 mm M.S. square bars.

Open surface drains shall be of RCC (1:1.5:3) type. Design and drawings shall have the approval of the Engg Incharge (Divisional Engr.). For expansive soils, the guide lines of IS 9451 shall be followed. Suitable expansion joints shall be provided as per standard.

In general, all plant effluent drainage shall be through buried concrete pipes and all storm water drainage shall be through open drains/pipe drains. Open storm water drains shall be provided on both sides of the roads and shall be designed to drain the road surface as well as all the free and covered areas.

Pipe drains shall be connected through manholes at an interval of maximum 30 m. Plant effluents shall be suitably treated by the Contractor to meet all the prevalent statutory requirements and local pollution control norms and treated effluents shall be conveyed to the storm water drainage system at a suitable location for their final disposal.

Invert of the drainage system shall be decided in such a way that the water can easily be discharged above the High Flood Level (HFL) outside substation boundary at suitable location and approved by Engg Incharge (Divisional Engr.). Pumping of drainage water, if required, shall be provided by Contractor.

All internal site drainage systems, including the final connection and disposal to Engg Incharge (Divisional Engr.) acceptance points shall be part of Contractor's scope including all required civil work, mechanical and electrical systems. The Contractor shall connect his drain(s) at one or more points.

BHEL Transmission Business Group
Industry Sector
Noida

Precast manholes shall be preferred against cast-in-situ type. The drainage scheme may either employ open drain system or underground pipe system or a combination of both. A man hole shall be provided at every turn or corner in case of underground type in addition to the normal requirement.

Suitable pumping arrangement shall be provided by the Contractor to pump out the water from sump to the open channel automatic float valve type pump shall be provided and installed by Contractor

The Contractor shall locate the outfall point outside the substation vicinity and the substation storm drainage must be connected to this point.

The drainage scheme and associated drawings shall be subject to approval of the Engg Incharge (Divisional Engr.).

7.2 Excavation and backfill

Trench excavations for drains shall be carried out with the minimum disturbance to adjacent ground and in such a way that existing or new work shall not be undermined. No backfill shall be placed until pipes, etc. have been inspected, tested and approved. Backfill shall be carefully placed by hand tools round pipes, etc. and rammed in layers not exceeding one hundred (100) millimetres thick in a manner which will not cause damage. When a minimum thickness of three hundred (300) millimetres above the pipes has been so placed, normal methods of backfilling and ramming may be adopted.

7.3 Laying Of Pipes

Pipes and fittings shall be of the types, qualities and sizes specified and shown on the approved drawings. They shall be laid to the lines and levels shown, and the barrel of each pipe shall bear firmly and uniformly on the trench bottom or prepared foundation bed, any projections in the trench bottom which could cause damage to pipes being first removed. Pipes shall be kept clean during and after laying, and open ends shall be provided with the temporary plugs to prevent entry of foreign matter. Each pipe shall be accurately bonded to gradient between sight rails and drain. Laying shall commence at the lowest end and proceed uphill. Pipes shall be laid with the sockets leading uphill.

7.4 Testing of drains

All drains, other than open channels, stone filled drains and porous drains, shall be of watertight construction, and all soil drains shall be subjected to a water test before backfilling of trenches is commenced. Drains may be tested in sections, and manholes may be tested separately. The Contractor shall submit to the Engg Incharge (Divisional Engr.) for approval his proposals for testing. The drains shall withstand, without leakage, a water pressure of not less than one and one half (1.5) metres at any point for a period of 20 minutes or such other time as the Engg Incharge (Divisional Engr.) may direct. All necessary plugs, temporary connections and other equipment and all labour required for the tests shall be provided by the Contractor and at the expense of the Contractor. For testing of pipes in areas where an adequate supply of water is not readily available, the Engg Incharge (Divisional Engr.) will accept an air (smoke) pressure test, provided that the method of testing is approved by the Engg Incharge (Divisional Engr.). Further testing may be called for after backfilling of trenches to ensure that pipes have not been damaged during that operation.

7.5 Regulations

The regulations and recommendations of any relevant drainage or sanitary authority shall be fully observed, and the Contractor shall be responsible for acquainting himself with any such regulations.

8 0 SEWAGE SYSTEM

A sewage system shall be provided for all utility buildings including the Control room building and other auxiliary buildings.

The Contractor shall construct suitable septic tank and soak pit for the discharge of effluents.

Sewers shall be designed for a minimum self cleansing velocity of 0.6m/sec and the maximum velocity shall not exceed 2.4m/sec.

The sewage system shall consist of all necessary piping, pumps, if required, fittings, manholes, clean - outs, piping connections and all other materials required for safe and efficient sewage collection. Sewer pipes and fittings shall conform to the relevant Indian Standards.

BHEL Transmission Business Group
BHEL
Industry Sector
Noida-05

Cast iron pipes shall be used below ground level for sewage disposal.

Manholes shall be provided at every 20 metres along the length, at connection points, and at every change of alignment, gradient or diameter of a sewer pipe line.

9. 0 ROADS AND CULVERTS

The Contractor shall be responsible for constructing approach roads, sub-station roads and service roads etc. within the substation area. Layout of the roads shall be based on general details and arrangement drawings for the substation. Parking areas shall be provided for Site personnel and a minimum of twenty numbers of visitors at convenient locations. Adequate turning space for vehicles shall be provided and bend radii shall be set accordingly. Roads to the transformer bays shall be as short and straight as possible. Where the substation layout warrants headroom safety barriers shall be installed to prevent vehicles coming into contact with overlying conductors. Such barriers shall be included as part of the scope of the work.

All substation roads shall be constructed so as to permit transportation of all heavy equipment. A minimum seven metres black topping with 1.6 m wide shoulders on either side of the road shall be constructed for double lane roads. The other service roads shall be with 3.75 m black topping and 1.3 m wide shoulders on either side of the road.

Finished top (crest) of roads shall be a minimum of 300 mm above the surrounding grade level (Formation level).

oad construction shall be as per Indian Road Congress (I RC) standards.

Adequate provision shall be made for road drainage.

All culverts and allied structures required for road/rail, drain, trench crossings etc shall be designed for class AA loading as per IRC standard.

All roads shall be designed for class 'E' of traffic i.e. traffic intensity of 450-1500 vehicles per day (heavy vehicles exceeding 3 tonnes laden weight) as per IRC-37-1984, Guide-lines for the design of flexible pavements.'

California Bearing Ratio (CBR) method shall be followed for the design of roads. A detailed CBR test which is an adhoc penetration test shall be carried out as per the procedure outlined in IS 2720 (Part XVI).

The surface of the hardstanding shall be laid with falls to the drainage system. Care shall be taken during the construction that no materials enter the drainage system.

At the junction of the hard standing and roads due to different thickness of foundations, precautions shall be taken to ensure that sub-surface drainage from the hard standing does not have a detrimental affect upon the road foundations.

A) CONCRETE ROAD:

The side shoulder of all the roads shall be with kerb stone at two sides. The kerb stones shall be painted yellow and black ternatively. In case of switch yard road (concrete road) the shoulder would be compacted earth 600 mm wide on the ..des of the road and shall be provided with cement chequered tiles of adequate strength as per standard practice. The concrete road shall have 100 mm thick PCC (1:2:4 nominal ratio).Below it 100 mm thick PCC (1:4:8) shall be provided.300 mm thick water bound macadam (WBM) in three equal layers of 100 mm each at the bottom. PCC and WBM shall extend upto the shoulder width on both sides of the road outside switch yard area as per drawing and the shoulder shall be provided with cement chequered tiles of adequate strength as per standard practice. In case of road within the switch yard area the PC C and WBM shall be placed only up to the width of the road. Polythene sheet of 125 microns shall be placed between the RCC and PCC slab.

ASPHALT expansion joint shall be considered (composed of a blend of asphalts, vegetable fibers, and mineral fillers formed under heat and pressure between two asphalt-saturated liners)/FIBRI expansion joint (cellular fibers securely bonded together and uniformly saturated with asphalt to assure longevity, versatile, resilient, flexible and non-extruding) for concrete road. It is waterproof, permanent, flexible, and self-sealing Expansion joints required thickness shall be provided at every 8 mtrs.

In addition, in case of 7 mtrs wide roads 100 mm Dia hume pipe (NP-3) shall be provided at every 100 mtrs interval across the length of the road for cable crossing. The width of the road shall be 7mtrs 3.5 mtrs

B) BITU MINOU S ROAD:

The following procedure shall be followed for the construction of bituminous roads.

BHEL, Transmission Business Group
Industry Sector

1. Compacted WBM at the bottom end of the road up to a thickness of 300 mm in three equal layers 100 mm each. The compaction shall be done by laying stone aggregates of size 100mm. each lair shall be laid and compacted with water spreading and using rollers as per the standard practice adopted in the CPWD guide line.

2. Above. the compacted WBM 1st filing as stated under (). 200 mm thick consolidated WBM in two layers with stone aggregates of size 90 – 45mm shall be laid. Each layers shall be laid and compacted with water spreading and using rollers as per recommended.

3. Above the compacted 2nd layer of WBM. 75 mm thick consolidated WBM in two layers with stone aggregates of size 63mm-45mm shall be laid. Each layers shall be compacted with water spreading and using rollers as per recommended.

4. Above the compacted 3rd layer of WBM. 75 mm thick consolidated WBM in two layers with stone aggregates of size 53mm-22.4mm shall be laid. Each layers shall be compacted with water spreading and using rollers as per recommended.

5. Above the 4th layer of compacted WBM, 25mm thick pre mix carpet surfacing has to be done. The carpet surfacing shall be done with 2.25 cum and 1.12 cum of stone chippings of 13.2 mm size and 11.2 mm size respectively per 100 sq mtrs and 52 Kgs of hot bitumen per cum of stone chippings Complete with paving ASPHALT 80/100 heated and thin mixed with solvent @70g/Kg of ASPHALT. Hot bitumen of grade 80/100 shall be spread on road surface @750g/Kg per sqmtr. There shall be shoulder on both side of the roads as per given data. The curvature of the road shall be R–7M and additional metalling for turning has to be maintained. The shoulder shall also be made compacted morrum filling and other as specified.

1.1 Periphery roads out side the fencing:

Periphery roads to be constructed out side the fencing. The width of the road is 3.5 mtrs having borm of 1 mtr each at both sides of the roads. The roads shall be concrete road with general specifications as in 10(A).

1.2 The width and type of other roads are:

a) Approach roads shall be 7 mtr wide with both side shoulder of 1.75 ` mtrs. The roads shall be of bitumen grade type wherever specifically mentioned.

b) Other roads shall be (peripheral and colony) 3.75 mtrs width having shoulder of 1.3 mtr at both the side. The roads shall be of bituminous type

c) Main road shall be 7 mtr wide with both side shoulder of 1.75 ` mtrs. The road will be Concrete(SPECS. 10(A))

Note: The shoulder shall be provided with cement chequered tiles of adequate strength as per standard practice

10. 0 AUTO TRANSFORMER / TRANSFORMER/REACTOR FOUNDATION, RAIL TRACK / ROAD CUM RAIL TRACK

10.1 General

The Contractor shall provide a permanent transfer track system integrated with the auto transformer foundation to enable installation and the replacement of any failed unit with a spare unit. The transfer track system shall be suitable to permit the movement of any failed unit fully assembled (including OLTC. bushings) with integral radiators and oil. without the de-energization of any other equipment in the station. The system shall enable the removal of any failed unit from its foundation to a repair area and the installation of a spare unit The system shall not interfere with the normal internal road and trench system. If trench or drain crossings are required then suitable R.C.C culverts shall be provided in accordance with IRC Code and /or relevant IS.

Rail tracks shall be of RCC. M20(1:1.5:3 mix) grade The space between the tracks shall be suitably filled with local sand and 75 mm thick PCC of grade 1:3:6 placed over sand filling. The top of PCC shall be up to the formation level In case of road cum rail track. 75mm thick PCC of grade 1:1.5:3 shall be placed up to the road level. Suitable drainage system between the tracks shall be provided.

The rails shall be first quality 52 kg/m medium manganese steel as per Indian Railway specification T-12-64 and its subsequent revision, joined together by fish plates as per Indian Railway specification T-1-57, and 27 mm diameter fish bolts.

A pylon support system shall be provided for supporting the fire fighting system by the Contractor

BHEL Transmission Business Group
BHEL Industry Sector
Noida-05

For design of foundation for transformer refer the weightage of the transformer indicated in the BPS (civil works)

10.2 Oil Recovery System

10.2.1 General

An oil recovery system shall be provided for all transformers (containing insulating oil or any flammable or polluting liquid) in order to avoid spread of fire by the oil, and for environmental protection.

10.2.2 Description

Each auto transformer/transformer/Reactor including oil conservator tank and cooler banks etc shall be placed in a transformer pit surrounded by retaining walls (pit walls). The clear distance of the retaining wall from the transformer shall be 20% of the transformer height or 0.8 m whichever is greater. The transformer pit thus formed shall have a capacity equal to volume of oil, usually 125%, in the transformers. The MS grating placed at the formation level shall be covered with 100mm thick gravel of 40 mm nominal size which acts as an extinguisher for flaming oil. The bottom of the pit shall have an uniform slope towards the sump pit.

Each transformer pit shall be drained towards a common sump pit whose role is to recover the infiltrating water and the drained oil from of the pit. The sump pit shall have sufficient capacity to receive, without overflowing, the oil content of large transformers plus the water content of any fixed fire fighting system and a certain quantity of rain water collected from the pit connected to it. The system shall be provided with air vents large enough to avoid over-pressure during operation. The whole internal surface of the sump pit should be impermeable.

10.2.3 Materials

The retaining walls which make up the transformer pit shall be made of fire resistant material such as reinforced cement concrete, fire brick etc., and shall be impervious to oil.

The minimum height of the retaining walls shall be 15 cm above the finished level of the ground to avoid ingress of water from outside

The floor of the transformer pit shall be of plain cement concrete of concrete grade 1:2:4

10.2.4 Drainage

A device showing level of sump pit shall be fitted along with an automatic pumping system which shall have sufficient capacity to evacuate the fire fighting and rain water from the sump pit. The water/oil separation and drainage scheme shall be provided as described in the paper (23-07/1972 Cigre Session) presented by working group 23.04 regarding oil pollution. The Contractor may propose an alternative better scheme, which will be subject to the approval of the Engg Incharge (Divisional Engr.).

10.2.5 Particular Specification

If the height of the retaining walls which form the transformer pit exceed 60 cm, steps shall be provided to facilitate access to the transformer or auto transformer and reactor

When designing the transformer pit, the movement of the auto transformer must be taken into account

It must be assured that the coefficient of crushed stone (granular material) penetration which fills the transformer pit will be retained regardless of the climatic conditions.

11. 0 FIRE PROTECTION WALLS

11.1 General

Fire protection walls shall be provided in accordance with Tariff Advisory Committee (TAC) recommendations.

11.2 Application criteria

A fire wall shall be erected between the transformers and or the reactors if the free distance between the various pieces of equipment is less than 10 m, to protect each one from the effects of fire on another

Fire walls shall also be erected between the transformers, reactors, and auxiliary services transformers if the free distance is less than ten metres

BHEL Transmission Business Group
BHEL
Industry Sector
North

11.3 Fire resistance

The fire wall shall have a minimum fire resistance of three hours. Partitions which are made to reduce the noise level of the transformers shall have the same fire resistance where they are also used as fire walls. The walls of buildings which are used as fire walls, shall also have a minimum fire resistance of three hours.

Fire walls shall be designed in order to protect against the effect of radiant heat and flying debris from an adjacent fire. The column of the fire walls shall be type be RCC, M20 (1:1.5:3 mix).

11.4 Mechanical resistance

Fire walls shall have the mechanical resistance to withstand local atmospheric conditions. If the wall is intended to serve as a support for equipment such as insulators etc., its mechanical rigidity must be increased accordingly

Connecting the walls by steel or other structures, which may produce a reversing torque if overheated, shall be avoided.

11.5 Dimensions

Fire walls shall extend at least two metres on each side of the power transformers or reactors and at least one metre above the conservator tank or safety vent

These dimensions might be reduced in special cases, and if TAC permits so, where there is lack of space. A minimum of two metres clearance shall be provided between the equipments e.g. reactors, transformers and fire walls.

Building walls which act as fire walls shall extend at least one metre above the roof in order to protect it.

11.6 Materials

Fire walls may be made of reinforced concrete (M20 grade), fire brick, concrete blocks or corrugated iron on a steel structure as per the system requirements. Materials used must conform to the standards of the National Fire Prevention Association and TAC norms.

12.7 BOUNDARY WALL/COMPOUND WALL:

The scope includes the design, engineering and construction of the boundary wall all along the property line of the OPTCL on each sub-station.

Construction of Boundary wall: The boundary wall shall be constructed to a height of 2 mtrs above finished ground level of the substation area with 10" wide brick masonry work with RCC(1:1.5:3) ground tie beam to be rested on the RCC pillars **(pillar to pillar distance @ 3mtrs)** as detailed below.

There shall be [illegible] ith all along the periphery of the boundary [illegible] [illegible]station perimeter [illegible] [illegible] of CCTV and electric pole around [illegible] [illegible]hole length of the [illegible]

The boundary wall shall be designed based on the soil investigation data.

Salient points to be considered at the time of design:

(1) RCC (1:1.5:3) pillars to be considered. RCC pillar to pillar distance shall be maximum 3mtrs along the boundary line. The height of the RCC pillars shall be 2 mtrs above finished ground level of the substation area and below the virgin soil a minimum of 750 mm depth.
Size of the RCC Pillar: 250mmX250mm
Provision of MS rod: (a) Vertical 12 mm Ø: 6 Nos. (b) Stirrup: 8 mm Ø,200 mm c/c.
There shall be provision of RCC Raft at the bottom of the RCC pillar. Size of the Raft shall be 750 mmX900mmX200mm.
Provision of MS rod. (a) Both way top & Bottom 12 mm Ø in two layers. 3 Nos. each (total 12 nos)

(2) RCC (1:1.5:3) tie beam continuous RCC tie beam to be rested on the RCC pillars below the finished ground level all along the boundary line.
Provision of MS rod (a) Horizontal 12 mm Ø: 6 Nos. (b) Stirrup: 8 mm Ø,200 mm C to C

(3) Brick works: 1st Class Brick of size 250 mm all along the boundary wall to be provided. Cement sand mortar of ratio (1:5) to be provided for brick masonry works. The height of the brick wall shall be minimum 2 mtrs height

BHEL, Transmission Business Group
BHEL
Industry Sector
Noida-05

from the top of the tie beam provided at the finished ground level. A 50mm height of finished concrete (ratio 1:2:4) shall be provided on the top of the boundary wall.
250mm Brick masonry work of 500mm depth below the tie beam also to be considered where ever required.

Suitable GI post @ distance of 1 mtr along the B/W to be provided at the top of the B/W, single concertina wire runs in loops on fence GI post with blade tape with BT-10 to BT-60 concertina wire CBT-65 with OD: 450-960 mm. hot dipped galvanised razor wire with bright & beautiful blade for fixing to the GI post and other materials as per standard drg fencing shall be provided on top of the boundary wall as mentioned above. All corner of the B/W should be provided minimum two nos extra post for getting adequate strength.

BRICK: The brick shall be shall be machine moulded and made from suitable fly ash, cement, lime, gypsum. etc. They shall be free from cracks and nodules of free lime. They shall have smooth rectangular faces with sharp corners and shall be of uniform colour. The bricks shall be moulded with the frog of 100mm x 40 mm and 10mm to 20mm deep on one of its flat sides. The bricks shall not break when thrown on the ground from a height of 600mm.

The size of the modular bricks shall be 190 x 90 x 90 mm

he size of the conventional bricks shall be 250 x 125 x 75mm.

Only bricks of one standard size shall be used on one work. The following tolerance shall be permitted in the conventional size adopted in a particular work. Length +3.0mm. Width + 1.50mm. Height + 1.50mm.

The crushing strength of the brick shall not be less than 75.0 Kg / Sq cm. The average water absorption shall be within 13-15% by weight. Similarly, the porosity of the fly ash bricks shall be within 12-20%. Necessary test for crushing strength and water absorption shall be carried out as per IS 3495 . (Part I to Part IV) 1976.

(4) Cement Plastering works: Cement sand mortars of ratio(1:5) to be provided both the sides of the boundary wall.

(5) Galvanised barbed wire fencing shall be provided on top of the boundary wall to a height of 0.5 mtr. 'Y' Type anti climbing device with inclined length of each angle 640mm and vertical height 500 mm with 6 rows of 12 gauge Galvanised barbed wire with U clip, hooks etc. at 2mtr c/c along the B/W to be provided at the top of the B/W, single concertina wire runs in loops on fence GI post with blade tape with BT-10 to BT-60 concertina wire CBT-65 with OD: 450-960 mm, hot dipped galvanised razor wire with bright & beautiful blade for fixing to the GI post and other materials as per standard drg fencing shall be provided on top of the boundary wall as mentioned above. All corner of the B/W should be provided minimum two nos extra post for getting adequate strength.
A minimum length of 450 mm (bottom portion of the Y shaped frame) shall be grouted on the top of the concrete pillar and a clear height of 500 mm from the finished portion of the top of the wall shall be maintained for the Y shaped frame with GI barbed wires. The "Y" post shall be galvanised one and the size of the GI angle shall be 65X65X6 mm.

(6) Colouring: After the cement wash on the entire boundary wall two coats of weather coats paint to be applied.

(7) In case the boundary wall to be designed considering pile foundation, the minimum dia of the pile shall be 250mm of required length as per the design based on soil investigation. Rest of the boundary wall shall be in line with the above description from Sl. No-2 to Sl. No.-6.

(8) Boundary shall have one main gate as per stipulation elsewhere in the spec. The gate shall be supported by gate pillars of RCC (1:1.5:3).A separate wicket gate shall be provided adjacent to the main gate. Suitable Cow catcher(using solid MS rod of minimum 40mm dia duly painted) of adequate strength to withstand the load of the trailer loaded with Transformer/any heaviest mass of the Project may be considered.

BHEL Transmission Business Group Industry Sector Noida-05

12.8 CABLE AND PIPE TRENCHES

12.8.1 General

Cable trenches and pre-cast removable RCC covers (with lifting arrangement) shall be constructed using RCC of M20 grade.

The cable trenches shall be designed for the following loads.

- Dead load of 155 kg/ m length of cable support plus 75 kg on one tier at the end.
- Triangular earth pressure plus uniform surcharge pressure of 2 tonnes per sq.metre
- Cable trench covers shall be designed for (i) self weight of top slab plus concentrated load of 200 kg at centre of span on each panel and a surcharge load of 2 tonnes per sq. metre.

Cable trench crossings of road and rails shall be designed for class AA, class A and class 70R loading of IRC or relevant IS Code and should be checked for transformer loading.

Trenches shall be drained. Necessary sumps be constructed and sump pumps shall be supplied. Cable trenches shall not be used as storm water drains.

The top of trenches shall be kept at least 250 mm above the finished ground level. The top of cable trench shall be such that the surface rain water does not enter the trench.

All metal parts inside the trench shall be connected to the earthing system.

Cables from trench to equipments shall run in hard conduit pipes(GI pipe and necessary G.I bends and sockets)

A suitable clear gap shall be maintained between trench walls and foundations.

A clear (vertical) space of at least 300 mm shall be available for each tier in cable trench. From trench bed to lowest tier, a minimum clearance of 200 mm shall be available for one tier trench and 300 mm for trenches having more than one tier. The spacing between stands shall be 400mm.

The trench bed shall have a slope of 1/500 along the run and 1/250 perpendicular to the run.

All construction joints of cable trenches i.e. between base slab to base slab and the junction of vertical wall to base slab, as well as from vertical wall to wall, and all expansion joints shall be provided with approved quality PVC water stops of approximately 230 x 5 mm size for those sections where the ground water table is expected to rise above the junction of base slab and vertical wall of cable trenches.

Cable trenches shall be blocked at the ends if required with brick masonry in cement sand mortar 1:6 and plaster with 12mm thick 1:6 cement sand mortar.

Cable tray supports(all galvanised structures) shall be designed and constructed to be a single complete fabrication or assembly such that every layer of the horizontal cable tray supports are fixed, either bolted or welded, to a vertical steel support that is embedded in the concrete wall of the cable trough. It shall not be permitted to embed a horizontal support beam directly into the wall of the trough in order to use the concrete wall as a means of load bearing.

Concrete troughs shall be provided with concrete covers of suitable load bearing strength. Where the cable troughs are run across or within 3 m of substation roads, the trough covers shall be capable of bearing an accidental wheel load of 20 kN

MORE ON CABLE TRENCH.

All the cable trenches shall be RCC type with mixing ratio 1:1.5:3.The size of MS rod to be used for the same are of 8mm tor and 6mm.All the vertical rod shall be 8 mm continuous and the wall and raft shall contain 2 nos 8 mm rods at two layers and spacing shall be 150mm. The horizontal binders shall be of 6mm rod two nos in two layers and to be placed at 200mm centre to centre for both on the wall and raft portion of the trench The mentioned rod placements are for section 1-1,2-2,and 3-3. For section 4-4 instead of two 8mm and 6mm rods single rods can be used

A frame of hot dip galvanized angles of size 50X50X6 mm having provision of MS chairs on the grouting side on to the walls of the trench preferably at two locations(at top and bottom) of the frame (these chairs have to be welded with the rods of the wall for better rigidity). For section 1-1 there shall be of 4 tier

BHEL, Transmission Business Group
BHEL Industry Sector
Noida-05

mechanism for fixing of cable tray having width of the angle 450mm (3 nos) and the top angle shall be of 300 mm, and the quantity of such type of frame shall be 2 (for both way). For section 2-2 only one frame of the above mentioned one shall be used. For section 3-3 there shall be one frame but with three tier mechanism for fixing the cable trays. For section 4-4 two tier system of angle width shall be 200 mm width at the bottom and 100 mm width at the top. Fixing of the cable tray support stand (Frame) is to be fixed at a distance of 1 mtrs from one frame to the other.

The thickness of the RCC wall of the trench shall be 150mm and thickness of the raft shall be mm. All the frames for fixing of cable trays shall be of hot dip galvanized. A running earth strip has to run all through the cable trench for proper earthing of the cable trays and stand (frame).The size of the earth strip is of 50X6mm G.I flats. Welding the GI flats to the frame to be carried out. Earthing strips to be welded with the running earth mat at 10mtrs interval

The bidder also to supply and fix G.I perforated cable trays (of thickness 2mm) of appropriate size before laying of cables on the cable tray stand.

The other dimensions of the cable trench are as below.

Sl No	Section	No of tiers in each frame/ and no of such frame	Gap between the two angles in mm	Inside clearance in mm		Outside clearance in mm		Concrete thickness in mm	
				Top to Bottom	Wall to wall	Top to bottom of wall	Raft width	Wall	Raft
1	1-1	Four tiers/ Two (both way)	200	1275	1400	1350	1750	150	150
2	2-2	Four tiers/single(one way)	200	1275	900	1350	1450	150	150
	3-3	Three/single	200	1075	900	1150	1450	150	[illegible]
4	4-4	Two/singe	200	545	250	620	350	150	150

The covers of the slab are also of RCC with ratio mixing 1:1.5:3.The thickness of the slab shall be 75mm for section 1-1(MS Rods to be used 10mm&8mm). section 2-2, 3-3 shall be 60mm (MS Rod to be used 8mm) and section 4-4 shall be 50mm(MS Rods to be used 8mm&6mm). The MS rods to be used shall be placed at 100 mm centre to centre both way and properly binded .The cover slab shall have provision of lifting hooks at two points for easy lifting of the slabs. Slabs having lifting hooks shall be placed at every 10th slabs The lengths of the cable trench cover slabs are as below The cable trench cover slabs shall be provided with GI Angle of suitable size as per the thickness of the slabs on the outer portion (four side) as a frame

Section	Length of the slab	Thickness of the slab
1-1	1600mm	75mm
2-2	1100mm	60mm
3-3	1100mm	60mm

VOL-III(TS) L6-CIVIL WORKS- Page 21

BHEL Transmission Business Group Industry Sector Noida-05

4-4	400mm	450mm

The covers for the cable trench inside the control room shall be provided with MS chequered plate with MS angle stiffeners of minimum 50X50X6 mm thick (four sides and corners to corners) at the bottom for proper mechanical strength. All the MS shall be provided with anti-rusting paints of minimum two coats after the primer coat

12.9 Excavation

Excavation for cable ducts shall generally be carried out in accordance with Clause no. 6.2 of this specification.

12.10 Back fill

Except where ducts are to be encased in concrete, sand is to be packed and well tamped round the duct until it is covered to a depth of 75 mm above the upper surface of the duct. Filling above this level is to be with suitable excavated material free from large stones. In multiple duct runs the interstices between the ducts are to be filled with sand and compacted. A cover of 75 mm above the uppermost ducts shall be maintained. The sand used shall be the same quality as approved for use in making concrete.

12.11 Laying of ducts

Telephone and electrical cable ducts shall be laid and jointed in accordance with the Manufacturer's instructions.

12.12 Multiple runs to ducts

Electrical cable ducts in multiple runs whether encased in concrete or not, shall be laid at approved centres vertically and/or horizontally. The minimum concrete encasement where required is to be 150 mm. The final jointing of ducts in multiple runs shall be done in the trench, i.e. the duct shall be lowered and jointed singly not in groups, and duct joints shall be staggered by approximately half the duct length in alternate lines.

12.13 Cutting of ducts

The Contractor shall carry out any necessary cutting of pipe ducts according to the requirements of the work. Except where ducts enter the cable trench at an angle, they shall be cut at right angles to the length of the duct. The inside edges of cut ducts shall be thoroughly rounded off or so dressed before being placed in position so that there can be no possibility of damage to cables from the edges of the ducts. All electrical ducts entering draw pits shall be provided with suitable bellmouths.

12.14 Cleaning and testing of ducts

On completion of all electrical cable ducting, two mops of appropriate size connected one to each end of an iron mandrel shall be passed twice through each way to clean the conduit and to remove any foreign matter which may have entered. If any obstruction or other defect be discovered it shall be removed or rectified forthwith.

12.15 Sealing of electrical ducts

As soon as every duct or set of ducts has been proved and its draw wire material installed, the ends of the cut or its bellmouth where provided, shall be sealed to a depth of 5 mm with an appropriate sealer, and a single coat of bitumastic paint shall then be applied over the end of the ducts and the seal. The length of draw wire installed shall be such that at least one metre of draw wire extends from each end of each duct. After the ends of ducts have been sealed the free ends of draw wires shall be neatly coiled.

12.16 Concrete cable and pipe trenches

In-situ concrete trenches are to be provided inside and outside the Substation. The trenches are to have falls in the floor and must be drained at regular intervals.

All trenches must have trench covers suitable for their location and loading. Any beams or supporting covers must be as shallow as possible to avoid interfering with the pipes and cables in the trench

Once the trench covers have been made they are to be stored and not laid until all trench cabling, piping, etc. is finished. Any covers laid before this time which become damaged shall be replaced at the Contractor's expense.

BHEL, Transmission Business, BHEL Industry Sector Noida-05

Trench covers and bridging beams for covers, except where heavy duty, shall be light enough for two men to lift.

12.17 Buried cables

Cables are to be laid in neat lines and at suitable levels. Their depth below ground level will depend upon the voltage associated with the cables but in all cases the excavation must provide a clear trench. Sand filling below, around and above the cables will always be required and protection covers or tiles will be placed in position over the sand filling before final backfilling to the ground level. The line of the cable trenches shall be marked with suitable posts as required by relevant section of this Specification.

12. 0 FOUNDATION/RCC DESIGN

12.1 General

All foundations/RCC Design shall be of reinforced cement concrete. The design and construction of RCC structures shall be carried out as per IS 456 and minimum grade of concrete shall be M20 corresponding to 1 1.5:3 (M20)nominal mix ratio with 12-20 mm coarse aggregate. Higher grades of concrete than specified above may be used at the discretion of the Bidder without any financial implication to the owner. Work covered under this clause of the specification comprises the construction of foundations and other RCC constructions for switchyard structures,equipment support,trenches,drains,jacking pad,pulling block,control cubicles,bus supports.Auto transformer/power transformer/reactors, marshalling kiosks,auxiliary equipments and system buildings, tank or for any other equipment or service and any other foundation required to complete the work. Also applicable to other RCC constructions.

If the site is sloping, the foundation height will be adjusted to maintain the exact level of the top of structures to compensate such slopes.

Switchyard foundation plinths and building plinths shall be minimum 325 mm and 1000 mm above finished ground level respectively. Minimum 75 mm thick lean concrete shall be provided below underground structures,foundations,trenches etc to provide a base for construction.

The design and detailing of foundations shall be done based on the approved soil data and sub-soil conditions as well as for all possible critical loads and the combinations thereof. The special footing or pile foundations as may be required based on soil/sub-soil conditions and superimposed loads shall be provided.

Admixtures in concrete shall confirm to IS:9103. The water proofing cement additives shall confirm to IS:2645. Concrete Admixtures/Additives shall be approved by the owner.

Limit state method of design shall be adopted unless stated otherwise in the Specification.

For design and construction of steel-concrete composite beams IS 11384 shall be followed.

For detailing of reinforcement IS 2502 and SP:34 shall be followed. Cold twisted deformed bars (i.e. 415 N/sq mm) conforming to IS 1786 shall be used as reinforcement. However, in specific areas, mild steel (Grade1) conforming to IS 432 can also be used. Two layers of reinforcement (on inner and outer face) shall be provided for wall and slab sections having thickness of 150 mm and above. Clear cover to reinforcement towards the earth face shall be minimum 40 mm.

RCC water retaining structures such as storage tanks, cooling water basin etc. shall be designed as uncracked sections in accordance with IS 3370 (Part 1 to IV) by working stress method and shall also be tested for water tightness at full water level. However, water channels shall be designed as cracked sections with limited steel stresses as per IS 3370 (Part 1 to IV) by working stress method

The procedure used for the design of the foundations shall be the most critical loading combination of the steel structure and /or equipment and /or superstructure, and other conditions which produce the maximum stresses in the foundation or the foundation component,and as per the relevant IS Codes of foundation design. The design calculations shall be submitted by the bidder showing complete details of piles,pile groups proposed to be used.

All foundations shall rest below virgin ground level and the minimum depth of foundation below the virgin ground level shall be maintained

Design shall consider any sub-soil water pressure that may be encountered.

BHEL, Transmission Business Group
Industry Sector
Noida-05

Necessary protection to the foundation work, if required, shall be provided to take care of any special requirements for aggressive alkaline soil, black cotton soil or any other type of soil which is detrimental or harmful to the concrete foundations.

RCC columns shall be provided with rigid connection at the base.

All building sub-structures shall be checked for sliding and overturning stability during both construction and operating conditions for various combinations of loads. Factors of safety for these cases shall be as stated in relevant IS Codes or as stipulated elsewhere in the Specifications.

Earth pressure for all underground structures shall be calculated using coefficient of earth pressure at rest, coefficient of active or passive earth pressure (whichever is applicable). However, for the design of substructures of any underground enclosures, earth pressure at rest shall be considered.

In addition to earth pressure and ground water pressure etc., a surcharge load of 2T/sq.m shall also be considered for the design of all underground structures including channels, sumps, tanks, trenches, and substructures of any underground hollow enclosure etc., to allow for vehicular traffic in the vicinity of the structure.

The following conditions shall be considered for the design of water tanks, pump houses, channels, sumps, trenches and other underground concrete structures such as basements etc.

- Full water pressure from inside and no earth pressure, ground water pressure and surcharge pressure from outside (applicable only to structures which are liable to be filled with water or any other liquid).
- Full earth pressure, surcharge pressure and ground water pressure from outside and no water pressure from inside

Design shall also be checked against buoyancy due to the ground water during construction and maintenance stages. Minimum factor of safety of 1.5 against buoyancy shall be ensured ignoring the superimposed loadings.

Base slabs of any underground enclosures shall be designed for empty condition during construction and maintenance stages with maximum ground water table (GWT). Minimum factor of safety of 1.5 against buoyancy shall be ensured ignoring the super-imposed loadings.

Base slab of underground enclosures such as water storage tank shall also be designed for the condition of different combination of pump sumps being empty during maintenance stages with maximum GWT. Intermediate dividing piers of such enclosures shall be designed considering water in one pump sump only and the other pump sump being empty for maintenance.

The foundations shall be proportioned so that the estimated total and differential movements of the foundations are not greater than the movements that the structure or equipment is designed to accommodate.

The foundation of the transformer and circuit breaker shall be of block type foundation. Minimum reinforcement shall be governed by IS:2974 and IS:456.

The tower and equipment foundations shall be checked for a factor of safety of 2.2 for normal condition and 1.65 for short circuit condition against sliding,overturning and pullout. The same factor shall be used as partial safety factor over loads in limit state design also.

All underground concrete structures such as basements, pump houses, water retaining structures etc. shall have plasticizer cum water proofing cement additive conforming to IS 9103. In addition, the limit on permeability as given in IS 2645 shall also be met. The concrete surface of these structures in contact with earth shall also be provided with two coats of bituminous painting for water /damp proofing.

In case of water leakage in the above structures, leakage repair shall be achieved by the injection method.

12.2 Machine Foundations

All machine foundations shall be designed in accordance the provisions of the relevant parts of the latest revisions of IS 2974, IS 456 and IS 2911. The provisions of DIN 4024 (latest) shall also be followed.

All block foundations resting on soil or piles shall be designed using the elastic half space theory.

The mass of the RCC block shall not be less than three times the mass of the machine. Dynamic analysis shall be carried out to calculate natural frequencies in all the modes including coupled modes and to calculate vibration amplitudes

BHEL Transmission Business Group
Industry Sector
Noida-05

Frequency and amplitude criteria as laid down by the relevant IS codes and/or machine manufacturers, shall be satisfied. Minimum reinforcement shall be governed by IS 2974 and IS 456.

For the foundations supporting minor equipments weighing less than one tonne, or if the mass of the rotating parts is less than one-hundredth of the mass of the foundation, no dynamic analysis is necessary. However, if such minor equipment is to be supported on building structures, floors etc. suitable vibration isolation shall be provided by means of springs, neoprene pads etc and such vibration isolation system shall be designed suitably.

12.3 Other Foundations

All foundations shall be designed in accordance with the provisions of the relevant parts of latest revisions of IS 2911 and IS 456.

Type of foundation system i.e. isolated footing, raft or piling shall be decided based on the load intensity and soil strata.

A minimum three piles shall be provided in any pile group.

Gantry and tower foundations shall be designed for an additional factor of safety of 1.1 for normal/ broken wire conditions and for short circuit condition.

Circuit breaker foundations shall be designed for impact loading and shall be strictly in accordance with the Manufacturer's recommendations.

13. 0 FOUNDATIONS AND R CC CONSTRUCTION

13.1 General

Work covered under this Clause of this Specification comprises the design, supply and installation of foundations and other RCC constructions for switchyard structures, equipment supports, trenches, rains, jacking pads, pulling blocks, fencing, control cubicles, bus supports, transformers, marshalling kiosks, auxiliary equipments and systems, buildings and tanks, or for any other equipment or service and any other foundation required to complete the work. This clause is as well applicable to the other RCC constructions.

Concrete shall conform to the requirements of IS 456 and all the tests shall be conducted as per relevant Indian Standard Codes.

If the site is sloping, the foundation height will be adjusted to maintain the exact level of the top of structures to compensate for such slopes.

Switchyard foundation plinths and building plinths shall be minimum 325 mm and mm above finished ground level respectively.

A minimum of 75 mm thick lean mix concrete (1:3:6) shall be provided below all underground structures, foundations, trenches etc. to provide a base for construction.

Concrete made with portland cement(OPC-43 grade or higher grade) shall be carefully cured and special consideration shall be given during the placing of concrete and removal of shuttering.

The design and detailing of foundations shall be done based on the approved soil data and sub-soil conditions as well as for all possible critical loads and combinations thereof. Spread footing foundations or pile foundations as may be required based on soil and subsoil conditions and superimposed loads shall be provided

If pile foundations are adopted, the same shall be cast-in-situ, driven, bored, precast or underreamed type as per relevant IS. Only RCC piles shall be provided Suitability of the adopted pile foundations shall be justified by way of full design calculations. Detailed design calculations shall be submitted by the contractor showing complete details of piles and pile groups proposed to be used. Necessary initial load tests shall also be carried out by the contractor at their entire cost to establish the pile design capacity Only after the design capacity of piles has been established, shall the Contractor commence of piling. All the design and testing work shall be planned in such a way that these shall not cause any delay in project completion

13.2 Cement

The cement to be used shall be the best quality of its type.

BHEL Transmission Business Group Industry Sector Noida

All cement shall be sampled and tested in accordance with Indian Standards.

Cement shall be Ordinary Portland Cement as per I.S.269-1976 or Portland Slag Cement as per I.S. 455-1976

The Ordinary Portland cement(OPC-43 grade or higher grade) used in concrete shall confirm to IS 269

Requirement of sulphate resistant cement (SRC) for sub structural works shall be decided in accordance with the Indian Standards based on the findings of the detailed soil investigation to be carried out by the contractor

High Alumina cement shall NOT be used.

13.3 Delivery and storage of cement

Cement shall be delivered to the site in bulk or in sound and properly sealed bags and while being loaded or unloaded whether conveyed in vehicles or by mechanical means, and during transit to the concrete mixers, must be protected from the weather by effective coverings. Efficient screens are to be supplied and erected to prevent wastage of cement during strong winds.

If the cement is delivered in bulk, the Contractor shall provide at his own cost approved silos of adequate size and number to store sufficient cement to ensure continuity of work. The cement shall be placed in these silos immediately it has been delivered on the site. Suitable precautions shall be taken during unloading to ensure that the resulting dust does not constitute a nuisance.

If the cement is delivered in bags, the Contractor shall provide at his own cost perfectly waterproof and well-ventilated sheds having a floor of wood or concrete raised at least 150 mm above the ground. The sheds shall be large enough to store sufficient cement to ensure continuity of work. Each consignment of each type of cement shall be stacked separately therein. On delivery at site the cement shall at once be placed in these sheds and shall be used in the order in which it has been delivered.

All cement shall be used within 3 months of the date of manufacture.

13.4 Aggregate

Coarse and fine aggregate shall conform to the requirements of IS 383-1970.

Sampling and testing of aggregates shall be in accordance with the relevant Indian Standard.

Fine and coarse aggregates shall be obtained from the same source and the Contractor shall ensure that material from the source is known to have a good service record over a long period of time.

Aggregate shall be hard and dense and free from earth, clay, loam and soft, clayey, shaley or decomposed stone, organic matter and other impurities.

13.5 Storage of aggregates

Coarse and fine aggregates shall be stored on site in bins or on clean, dry, hard surfaces, and be kept free from all sources of contamination. Aggregates of different gradings shall be stored separately, and no new aggregate shall be mixed with existing stocks until tested, and approved by the Engg Incharge (Divisional Engr.).

13.6 Approval of Supplies

As soon as possible after the Contract has been placed the Contractor shall submit a list giving details of the sources from which he proposes to obtain concrete and mortar materials. Only materials from approved sources shall be brought to site, but the Engg Incharge (Divisional Engr.) will be prepared to extend his approval to other satisfactory sources of supply which may be proposed by the Contractor Approval of a source of supply shall not imply acceptance of material found not to conform to this Specification

13.7 Water

Water used for mixing concrete and mortar shall be clean, fresh water obtained from an approved source and free from harmful chemicals, oils, organic matter and other impurities. Normally potable water may be considered satisfactorily for mixing and curing concrete and masonry work

BHEL Transmission Business Group Industry Sector Noida 05

13.8 Steel bar reinforcement (FE500)

Reinforcement shall comply with the appropriate Indian Standards

All bar reinforcement shall be hot rolled steel except where the use of cold worked steel is specified on the drawings or otherwise approved.

The bars shall be round and free from corrosion, cracks, surface flaws, laminations, rough, jagged and imperfect edges and other defects.

The bar reinforcement shall be new, clean and of the lengths and diameters described on the Drawings and Schedules. Bars shall be transported and stored so that they remain clean, straight, undamaged and free from corrosion, rust or scale. Bars of different diameters shall be separately bundled.

13.9 Bending of reinforcement

All steel bars are to be accurately bent cold to the shapes and sizes indicated on the Drawings and Schedules unless otherwise approved. Re-bending of bars and bending in position in the works shall not generally be allowed.

13.10 Welding of reinforcement

Spot or tack welding for positioning bars in heavily reinforced areas will only be allowed with the express permission of the Engg Incharge (Divisional Engr.). Extension of lengths of reinforcement by welding will not be permitted.

Welding will be approved only in low stress members, and lap welding will not be approved in any circumstances.

13.11 Fixing of reinforcement

Before fixing in the works bars shall be seen to be free from pitting, mud, oil, paint, loose rust or scale or other adherents harmful to the bond or strength of the reinforcement. Bars shall be fixed rigidly and accurately in position in accordance with the working drawings, unless otherwise approved by the Engg Incharge (Divisional Engr.). Reinforcement at all intersections shall be securely tied together with 1.5 mm soft annealed tying wire the ends of which shall be cut and bent inwards. Cover to the reinforcement shall be in accordance with Clause 15.12 of this specification and sufficient spacers and chairs of precast concrete of approved design shall be provided to maintain the specified cover and position. No insertion of bars in previously placed concrete shall be permitted. Projecting bars shall be adequately protected from displacement. The fixing of reinforcement in the works shall be approved by the Engg Incharge (Divisional Engr.) before concrete is placed. Measurement will be based on the calculated weights of steel actually used in tonnes corrected to second place of decimal.

13.12 Concrete cover to reinforcement

For durability the minimum concrete cover to any reinforcing bar shall be as follows.

Concrete above ground.

- Internal faces of slabs 25 mm
- Internal faces of beams and walls 30 mm
- Exposed faces of slabs, beams and walls 50 mm
- All faces of columns 50 mm

Concrete below ground (including piles).

- Faces in contact with soil including blinding concrete 75 mm
- All other faces (i.e internal faces of basement wall). 50 mm

Only concrete or steel spacers shall be used to achieve the required minimum thickness of concrete cover to reinforcement. Concrete spacers shall have non metallic ties. Timber blocks for wedging the steel off the formwork will not be allowed.

BHEL, Transmission Business Group
Industry Sector
Noida-05

13.13 Formwork

Form work shall be constructed from timber, metal, lined as necessary for special finishes and designed with the quality and strength required to ensure rigidity throughout placing, ramming, vibration and setting of the concrete, without detrimental effect.

Form work shall be erected true to line, level and shapes required using a minimum of approved internal ties. Faces in contact with the concrete shall be true and free from defect, jointed to prevent loss of water or fines, in panels or units which permit easy handling, and designed to permit side forms to be struck independently of soffit shuttering. Ties or spaces remaining embedded shall have the minimum cover specified for reinforcement. Forms for exposed concrete beams, girder casings and columns shall provide for a twenty five millimetre chamfer on external corners.

Wedges and clamps shall be kept tight during vibration operations. Before commencement or resumption of concreting, the interior of forms shall be cleaned and free of sawdust, shavings, dust, mud or other debris and openings shall be formed to facilitate this cleaning and inspection. The inside of the forms shall be treated with a coating of an approved substance to prevent adhesion. Care shall be taken to prevent this substance being in contact with the reinforcement.

13.14 Grades of concrete

Concrete shall be either ordinary or controlled and in grades designated M10, M15, M20 and M25 as specified in IS 456 (latest edition). In addition, nominal mixes of 1:3: 6 and 1: 4: 8 of nominal size 40 mm maximum, or as indicated on drawings, or any other mix without any strength requirements as per mix design shall be used where specified.

13.15 Ordinary concrete

Ordinary concrete shall be used for all plain cement concrete work and where shown on drawings or allowed by the Engg Incharge (Divisional Engr.). Ordinary concrete shall not require preparation of trial mixes.

In proportioning concrete, the minimum quantity of cement shall be as specified in Table 15.15.1 of this clause and the amount to be used shall be determined by actual weight. The quantities of fine and coarse aggregate may be determined by volume, but preferably by weight

The water cement ratio shall not be more than those specified in IS 456.

Grade of Concrete	Minimum cement content per cum. of finished concrete
M 10	236 kg
M 15	323 kg
M 20	410 kg
M 25	530 kg

Table - 15.15 **Minimum Cement content.**

13.16 Controlled concrete

13.16.1 Mix proportions

The mix proportions for all grades of concrete shall be designed to obtain strength corresponding to the values specified in IS 456 for respective grade of concrete. Preliminary tests as specified in the IS Code or as required by the Engg Incharge (Divisional Engr.), shall be carried out, sufficiently ahead of the actual commencement of the work, with different grades of concrete made from representative samples of aggregate and cement expected to be used on the job. The purpose of this test is to ascertain the water cement ratio required to produce a concrete having specified strength, and to demonstrate sufficient workability to enable it to be well consolidated and to be worked into corners of shuttering and around the reinforcement.

13.16.2 Mix design

As a guide to perform the mix design properly the relationship between water cement ratio, aggregate to cement ratio, workability and strength of concrete will be as per relevant IS.

BHEL, Transmission Business Group
BHEL
Industry Sector
Noida

The cement /total aggregate ratio is not to be increased beyond 1: 9.0 without specific permission of the Engg Incharge (Divisional Engr.). It should be noted that such high aggregate/cement ratios will be required for concretes of very low slump and high water cement ratios which may be required to be used in mass concrete work only.

The actual cement aggregate ratios are to be worked out from the specific gravities of coarse aggregates and sand being used, and from trial mixes.

13.17 Strength requirements

The mix proportions for all grades of concrete shall be designed to produce the grade of concrete having the required workability and a characteristic strength not less than the value given table 15.17

Grade Designation	Characteristic Compressive Strength at 28 days (minimum)
M 10	10 N / sq. mm
M 15	15 N / sq. mm
M 20	20 N / sq. mm
M 25	25 N / sq. mm

Table - 15.17 Strength Characteristic

The strength of concrete given above is the 28 days characteristic compressive strength of 15 cm cube.

13.18 Workability

The workability of concrete shall be checked at frequent intervals by slump test, where facilities exist and if required by the Engg Incharge (Divisional Engr.), alternatively the compaction factor test in accordance with IS 1199 shall be carried out.

13.19 Mixing of Concrete

Unless otherwise approved, concrete for foundations will be M 20/M25 grade, corresponding to nominal mix of 1:1.5:3/1:1:2 as per IS 456. The proportions of fine and coarse aggregate, cement and water shall be as determined by the mix design or according to fixed proportions in case of nominal mix concrete and shall always be approved by the Engg Incharge (Divisional Engr.). The quantities of the cement, fine and coarse aggregates shall be determined by weight, the water shall be measured accurately after giving proper allowance for surface water present in the aggregate. Water shall be added to make a workable mix and it is important to maintain the water-cement ratio at its correct value of 0.55 in accordance with the requirements of IS 456.

Water shall not be added to the mix until all the cement and aggregates constituting the batch are already in the drum and dry mix for at least one minute. Mixing of each batch shall be continued until there is uniform distribution of materials and the mass done for less than 2 minutes and at least 40 revolutions after all the materials and water are in the drum.

When hand mixing is permitted by the Engg Incharge (Divisional Engr.) for concrete to be used in unimportant locations it shall be carried out on a water tight platform and care shall be taken to ensure that mixing is continued until the mass is uniform in colour and consistency. In case of hand mixing, an extra 10% of cement shall be added to each batch and additional cost due to extra cement will be borne by the Contractor

13.20 Conveying Concrete

Concrete shall be handled and conveyed from the place of mixing to the place of final laying as rapidly as practicable by approved means before the initial setting cement starts. Concrete should be conveyed in such a way which will prevent segregation or loss of any of the ingredients. If segregation does occur during the transport of concrete same shall be re-mixed. The requirements to be fulfilled during trasportation are

- No segregation or seperation of materials in the concrete and
- Concrete delivered at the point of placing should be uniform and of proper consistency.

BHEL Transmission Business Group Industry Sector Noida-95

13.21 Placing Concrete

Form work and reinforcement shall be approved in writing by the Engg Incharge (Divisional Engr.) before concrete is placed. The forms shall be well wetted and all shavings, dirt and water that may have collected at the bottom shall be removed before concrete is placed. Concrete shall be deposited in its final position without segregation, re-handling or flowing. As far as possible concrete shall be placed in the formwork by means approved by the Engg Incharge (Divisional Engr.) and shall not be dropped from a height or handled in a manner which may cause segregation. Any drop over 180 cm. shall have to be approved by the Engg Incharge (Divisional Engr.). Once the concrete is deposited in its final position, it shall not be disturbed. Care should be taken to avoid displacement of reinforcement or movement of formwork.

The placing of concrete shall be a continuous operation with no interruption in excess of 30 minutes between the placing of continuous portions of concrete. When fresh concrete is required to be placed on previously placed and hardened concrete, special care should be taken to clean the surface of all foreign matter. For securing a good bond and water tight joint, the receiving surface should be made rough and a rich mortar placed on it unless it has been poured just before. The mortar layer should be about 15 mm thick with cement and sand proportion as that of the mix in use, and have the same water-cement ratio as the concrete to be placed.

After the concrete has been placed it shall be thoroughly compacted by approved mechanical vibration to a maximum subsidence without segregation and thoroughly worked around reinforcement or other embedded fixtures into the correct form and shape. Vibrators must be operated by experienced men and over vibration shall not be permitted. Care should be taken to ensure that the inserts, fixtures, reinforcement and formwork are not displaced or disturbed during placing of concrete. No concrete shall be placed in open while it rains. If there is any sign of washing of cement and sand, the concrete shall be entirely removed immediately. Slabs, beams and similar structure shall be poured in one operation normally. In special circumstances with the approval of Engg Incharge (Divisional Engr.) these can be poured in horizontal layers not exceeding 50 cm. in depth. When poured in layers, it must be ensured that the under layer is not hardened. Bleeding of under layer if any shall be effectively removed.

13.22 Compaction of Concrete

Compaction is necessary for production of good concrete. After the concrete has been placed it shall be thoroughly compacted by approved mechanical vibrator to a maximum subsidence without segregation and thoroughly worked around reinforcement or other embedded fixtures into the correct form and shape. Vibrators must be operated by experienced men. Care should be taken to ensure that the inserts, fixtures, reinforcement and formwork are not displaced or disturbed during the vibration of the concrete. The Contractors shall provide standby vibrators. Vibration is commonly used method of compaction of concrete, the use of mechanical vibrators complying with IS 2505, IS 2506, IS 2514 and IS 4656 for compacting concrete is recommended

For all practical purposes, the vibration can be considered to be sufficient when the air bubbles cease to appear and sufficient mortar appears to close the surface and facilitate easy finishing operations. The period of vibration required for a mix depends upon the workability of the mix.

13.23 Curing of Concrete

In order to achieve proper and complete strength of the concrete, the loss of water from evaporation should be prevented. Eighty to eighty five per cent of the strength is attained in the first 28 days and hence this 28-day strength is considered to be the criterion for the design and is called characteristic strength. The concrete after setting for 24 hours shall be cured by keeping the concrete wet continuously for a period of 10 days after laying.

The curing increases compressive strength, improves durability, impermeability and abrasion resistance. Failure to carry out satisfactory curing can lead to cracking in the concrete. This in turn can lead to salt attack of the reinforcement and consequential failure of the structure. If cracks occur in a structure which are severe enough to affect the structure, the Contractor shall cut out and replace the defective concrete at his own cost. The Contractor's attention is, therefore, drawn to this particular aspect of proper and adequate curing.

13.24 Construction joints

Construction joints are a potential source of weakness and should be located and formed with care and their number is kept to a minimum

BHEL Transmission Business Group Industry Sector Noida 05

When the work is to be interrupted, the concrete shall be rebated at the joint to such shape and size as may be required by the Engg Incharge (Divisional Engr.) or as shown on the drawings. All vertical construction joints shall be made with water bars which are rigidly fixed and shall provide a positive barrier against movement of water through the joint. Great care shall be taken when placing concrete around water bars because the space is often congested. Concreting shall be carried out continuously up to construction joints. Construction joints, if not described on the drawings, shall be in accordance with the following:

- In a column, the joint shall be formed about 75 mm below the lowest sofit of the beams framing into it, at the meeting points of the columns and the raft, and at the point of contraflexure in the columns.
- Concrete in a beam shall be placed throughout without a joint. However if the provision of a joint is unavoidable, the joint shall be vertical and at the middle of the span.
- A joint in a suspended floor slab shall be vertical at one of the quarter points of the span and at right angle to the principal reinforcement.
- Additional reinforcements and shear keys shall be provided at the construction joints.

In forming a joint, concrete shall not be allowed to slope away to thin edge. The locations of construction joints shall be planned by the contractor well in advance of pouring and be approved by the Engg Incharge (Divisional Engr.).

Construction joints in foundation of equipment shall not be provided without the approval of Engg Incharge (Divisional Engr.).

13.25 Expansion and separation joints

Expansion joints shall be as shown on the drawings or as specified in the schedules. Expansion joint filler boards conforming to IS 1838 and sealing strips shall have minimum transverse joints. Joints shall be vertical and straight except where otherwise approved and concrete surfaces and faces shall be flush on bothsides of the joint.

Separation joints shall be with standard water proof paper or with as alkathene sheets about 1 mm in thickness. Lap length and sealing of laps shall be to the satisfaction of the Engg Incharge (Divisional Engr.).

13.26 Removal of form work

Form work shall be kept in position fully supported, until the concrete has hardened and gained sufficient strength to carry itself and any loads likely to be imposed upon it. Stripping must be effected in such a manner and at such a time that no shock or other injury is caused to the concrete. The responsibility for safe removal rests with the Contractor but the Engg Incharge (Divisional Engr.) may delay the time of striking if he deems it necessary.

Minimum periods, in the absence of agreement to the contrary, between completion of concreting and removal of forms are given below but due regard must be paid to the method of curing and prevailing conditions during this period.

- Removal of shuttering to sides of rafts, walls, beams and columns — 2 days
- Removal of shuttering to slabs, beams and arches (props left under) — 6 days
- Removal of props to slabs, beams and arches — 16 days
- Lifting of pre cast members — 16 days

13.27 Pre cast concrete members

Pre cast concrete members shall be used in the works only where specified on the Drawings or approved by the Engg Incharge (Divisional Engr.).

The technical specifications for cement concrete, formwork and reinforcement covered under earlier clauses shall form a part of these specifications and shall be followed for carrying out pre cast concrete work.

Pre cast members shall not be disturbed or lifted until the minimum periods specified for formwork removal have elapsed.

13.28 Load Test on Parts of Structures

The load test on concrete, if desired by the Engg Incharge (Divisional Engr.) shall be carried as soon as possible after the expiry of 28 days from the time of placing of concrete as per the clause 16.5 to 16.6 of IS 456. The structure shall be

BHEL Transmission Business Group
BHEL Industry Sector
Noida-05

subjected to a load equal to full dead load of the structure plus 1.25 times the imposed load for a period of 24 hours and then the imposed load shall be removed. The entire cost of load testing shall be borne by the contractor and if any portion of the structure found unacceptable under the relevant clause of IS 456, the same shall be dismantled and replaced by a new structure as per specification at no extra cost to the Employer. If during dismantling any of the adjacent structure is damaged, the same shall be made good free of charge by the contractor to the satisfaction of the Engg Incharge (Divisional Engr.).

13.29 Finish of concrete surface

13.29.1 Concrete cast against formwork.

The following finishes to concrete surfaces, unless otherwise specified or shown on the drawings, shall be as follows

- **Class A1**: All permanently exposed surfaces, including exposed sides of foundations.
- **Class A2**: Surfaces to be covered by backfill, plasters or the like.

Class A1 surfaces shall be dense, fair, smooth, even, free from honeycombing, water and air holes and other blemishes, true to line and surface and free from board or panel marking. They shall be of uniform colour. Rendering of defective surfaces shall not be permitted, and, if ordered by the Engg Incharge (Divisional Engr.), the Contractor shall at his own expense cut out to expose reinforcement and make good any unsatisfactory work. All areas so treated shall be rubbed down and kept moist for several days.

Class A2 surfaces shall be dense, even, free from honeycombing and true to line and surface.

Any special finishes will be to details or instructions given by the Engg Incharge (Divisional Engr.).

13.29.2 Concrete not cast against form work.

The following finishes shall be provided unless otherwise specified or shown on the drawings—

- **Class B1**: All permanently exposed surfaces, including tops of equipment foundations, wall copings, window sills, precast items (except paving flags)
- **Class B2**: Paving flags and paths. Floors and slabs to be surfaced with blocks, tiles or waterproofing materials.
- **Class B3**: Roads, buried concrete and floors or slabs to be covered by screed.

Class B1 surfaces shall first be levelled and screened to produce a true surface After the moisture film has disappeared, and the concrete has hardened sufficiently, the surface shall be finished with a steel trowel under firm pressure to give a smooth, dense, even and hard surface free from all marks and defects.

Class B2 surfaces shall be levelled and screened to produce a true surface, and be finished with wooden or steel float to give a level surface free from screed marks. Excessive floating shall be avoided

Class B3 surfaces shall be levelled and screened to produce a true and uniform surface.

13.30 Holes, pockets, threaded inserts, etc.

The threaded inserts for casting into concrete shall be electro-galvanized and of malleable iron or mild steel. Holes, cavities and fixings shall be provided in the works only at the positions indicated on the drawings or as directed and they shall be incorporated as necessary during the work of concreting. Unless otherwise agreed a tolerance in position of plus or minus five millimetres shall be allowed. Inserts and bolts shall be fixed square in the works by means of temporary bolts or nuts, and then concrete cast around them. The projecting portions of such fixings, and concrete within fifty millimetres of them, shall be bitumastic painted and all threads well greased on completion of the work. Holes and pockets shall be stripped down clean on completion.

13.31 Blinding

Blinding concrete shall be made with nominal aggregate sizes of both 20mm and 40mm diameter. They shall be referred to respectively as grade M 10/20 and M 10/40.

Under all foundations and elsewhere as indicated on the drawings a layer of concrete grade M10 (1:3:6) shall be laid immediately the excavation is carried down to foundation level. The blinding surface shall be thoroughly cleaned before

BHEL, Transmission Business Group
Industry Sector
Noida-05

foundation concrete is deposited thereon. Sumps shall be provided where necessary to facilitate the control of drained water. The grade shall be applied as shown in Table 15.31.1

Location	Grade	Thickness of layer
Foundations and bases	M 10 / 1:3:6	75 mm
Floors of ducts, trough and reinforced slabs not exceeding 100 mm	M 10 / 1:3:6	50 mm

Table 15.31.1. **Blinding layer thickness values**

13.32 Admixtures and Additives

Only approved admixtures shall be used in the concrete for the Works. When more than one admixture is to be used, each admixture shall be batched in its own batch and added to the mixing water separately before discharging into the mixer. Admixtures shall be delivered in suitably labelled containers to enable identification.

Admixtures in concrete shall conform to IS:9103. The water proofing cement additives shall conform to IS:2645. Concrete admixtures and additives shall be approved by the Engg Incharge (Divisional Engr.).

The Contractor shall use an approved neutralized vinsol resin air-entraining agent in all concrete. The Air entraining agent shall be supplied and batched as a solution with a solids content not exceeding 15 percent by weight with suitable, stable and consistent pH.

The Contractor may propose and the Engg Incharge (Divisional Engr.) may approve the use of a water-reducing set-retarding admixture in some of the concrete. The use of such an admixture will not be approved to overcome problems associated with inadequate concrete plant capacity or improperly planned placing operations and shall only be approved as an aid overcoming unusual circumstances and placing conditions.

Water-reducing set-retarding admixture shall be an approved brand of Igno-sulphonate type admixture.

Water proofing cement additives shall be used as required or advised by the Engg Incharge (Divisional Engr.).

14. 0 FENCING

14.1 General

Fencing shall be designed for the most critical loading combination taking into account wind forces, stability, tension on wires, minimum requirements as per this clause and relevant IS recommendations.

The un climbable or security or anti-intruder fencing shall consist of chain link mesh, all as soon on the drawings and as specified below, supported on approved sections of structural steel. The posts shall be erected truly vertical, and all posts and struts shall be set in concrete block foundations.

Concrete kerbing shall be provided between the fence posts as shown on the drawings.

14.2 Areas requiring fencing

Fencing shall be provided for the following areas:

- Site fencing for the complete station, complete with barbed wires on top. Separate gates shall be provided for men and equipment
- Internal fence surrounding the various equipments (if) mounted on ground or a height lower than 2.5 m, without barbed wires on top. Necessary gates shall be provided for each area so surrounded.
- Wherever necessary anti-reptile fixture/arrangement shall be provided along with fencing

14.3 Product materials

14.3.1 General

Chain link fence fabric in accordance to IS :2721 and shall also meet the following requirements

BHEL, Transmission Business Group
Industry Sector
Noida-05

- Size of mesh — 75 mm
- Size of coated wire — 3.15 mm diameter
- Width of chain link — 2000 mm
- Class of zinc coating — medium
- Zinc coated after weaving

Posts shall be as shown in Table.

The posts shall be of medium M.S tube heavy gauge of 50 mm diameter confirming toYst-22 (Kg / sq. mm).The tubes shall be also confirm to IS:1161 IS 806.The length of the tubular post shall be 3200mm.

An M.S base plate of size 160X160X6mm thick shall be welded with the tubular post. The post shall be provided on the top with M.S plate.

The tubular post shall be welded with 8 numbers of M.S flat of size 50X6mm – 75 mm long. Two numbers of 13.5 mm dia holes on each cleats shall be provided to bolt the fence fabric panel. The cleats shall be welded at equal spacing in such a way that 4 nos of cleats are on the opposite side and remaining 4 nos cleats are on the opposite side of the post. The cleats on the corner posts shall be welded in such a way that it suits the site requirement.

The whole assembly of tubular post shall be hot dip galvanised. The zinc coating shall be minimum 615 gram per sq mm The purity of the zinc shall be 99.95% as per IS:209.

Fence fabric panel:

Chain link fencing shall be fabricated in the form of panel 2000X1928 mm. GI angle frame (50X50X6 mm) with bracing of 50X6 mm GI flat on both the corners shall be welded all round fence fabric to form a panel. Four pairs of 13.5 mm diameter holes on the vertical MS flat matching the spacing of holes in cleats fixed with pipe shall be provided to fix the fence panel with tubular posts. A washer shall also be provided below each nut. 12 mm diameter bolts and nuts including washers **shall also be supplied. All bolts, nuts and washer shall be hot dip galvanised.** The fence panel shall be provided with two GI flats of size 50X6 mm placed cross wise for rigidity of chain link.

Installations:

Fence shall be installed along switch yard line as per the approved GA drawing. Post holes shall be excavated by approved method. All posts shall be 2 mtrs apart measured parallel to ground surface.

Posts shall be set in 1:2:4 plain cement concrete block of minimum 0.4X0.4X1.2mtr depth. 75 mm thick PCC 1:4:8 shall be provided below concrete block

Fence posts shall be erected in vertical and kept for minimum 7 days curing before fence fabri erection.

Fence fabric panel shall be fixed to the post at 4 nos M S flat each of 50X6 mm.75mm long through 2 nos of 12 mm dia bolts on each flat.

Paintings as per decision of the Engineer in charge have to be carried out.

Continuous running earth by using 50 X 6 mm GI flats to be provided for safety purpose.

A 345/380 mm thick (one and a half brick size) toe wall of Brick/Rubble masonry, or concrete with notches shall be provided below all fencing and shall be minimum 200 mm above and 500 mm below finished ground level. All exposed surfaces for brick toe wall shall be provided with 15 mm 1:6 cement sand plaster and coated with two coats of water proofing weather paint. In case if rubble masonry is provided suitable pointing shall be done

GATES:

Gates shall be installed in locations shown on drawings. Next to the main gate, a men gate (1.25 m wide single leaf) shall also be provided.

BHEL, Transmission Business Group
Industry Sector
Noida-05

Bottom of gates shall be set approximately 40 mm above ground surface and necessary guiding mechanism (with roller on the bottom of the gate and fixed guider in the road)shall be fitted to avoid hanging of the main gate.

14.3.2 Gates

Gate frames shall be of galvanized steel of 40 mm dia main pipe and vertical pipes of 35mm dia @ 125 mm spacing (pipe to relevant IS) welded to the main pipe for frames or Black steel pipe to relevant IS for frames with welded joints and shall be painted with one coat of steel primer and two coats of synthetic enamel paints

Gates shall be fabricated with welded joints or other approved methods to achieve rigid connections. The gate frames shall be hot dip galvanized after welding.

Gates shall be fitted with galvanized malleable iron hinges, latch and latch catch. Latch and latch catch shall be suitable for attachment and operation of padlock from either side of gates. Hinges shall permit gates to swing through 180 degree back against fence

Gates shall be fitted with galvanized chain hook or gate hold back to hold gates open. Double gates shall be fitted with centre rest and drop bolt to secure gates in closed position.

14.3.3 Patching

Damaged galvanized surfaces shall be repaired. Damaged surfaces shall be cleaned with wire brush removing loose and cracked spelter coating. Two coats of approved zinc pigmented paint shall be applied to damaged areas in accordance with manufacturers instructions.

There shall be one gate located on boundary wall as main gate having wicket gate and one gate as switchyard gate, located on the fencing.

15. 0 BUILDING

15.1 General

The scope includes the design, engineering and construction of control room and colony quarters building. For control room and colony quarter building the tentative layout showing the facilities to be provided is indicated some where and also to be proposed by the bidders for better utility and aesthetic view. However, the size and layout of the building may be modified as per requirements of Single Line Diagram (SLD) with the approval of the Engg Incharge (Divisional Engr.).

15.2 Dimensions

An open space of one metre minimum shall be provided on the periphery of the rows of panels, and equipment generally, in order to allow easy operator movement and access as well as maintenance.

The building design shall also take into consideration the layout of the panels, switchboards, switchgear and other equipment in order to allow enough area for the future extension of switchyard depending upon the availability of substation area

15.3 Design

The buildings shall be designed:

- to the requirements of the National Building Code of India, and the standards quoted therein
- for the specified climatic and loading conditions
- to adequately suit the requirements of the equipment and apparatus contained in the buildings and in all respects to be compatible with the intended use and occupancy
- with a functional and economical space arrangement
- for a life expectancy of structure systems and components not less than that of the equipment which is contained in the buildings, provided regular maintenance is carried out
- to be aesthetically pleasing. Different buildings shall show a uniformity and consistency in architectural design

BHEL, Transmission Business Group
BHEL Industry Sector
Noida-05

- to allow for easy access to equipment and maintenance of the equipment
- with, wherever required fire retarding materials for walls, ceilings and doors, which would prevent supporting or spreading of fire
- with material preventing dust accumulation

Suitable expansion joints shall be provided in the longitudinal direction wherever necessary with provision of twin columns.

Individual members of the building frame shall be designed for the worst combination of forces such as bending moment, axial force, shear force, torsion, etc.

Permissible stresses for different load combinations shall be taken as per relevant IS Codes.

All cable vaults shall be located above ground level i.e. cable vaults shall not be provided as basements in the buildings.

The building lighting shall be designed in accordance with the requirements of relevant section.

The building auxiliary services such as air conditioning and ventilation systems, fire protection and detection systems and all other miscellaneous services shall be designed in accordance with the requirements specified in relevant sections of this Specifications.

The doors and windows of the building shall be of aluminium extruded channels, angles etc. The windows shall be provided with sliding shuttering facilities and also to be provided with aluminium make grills.

15.4 Design Loads

Building structures shall be designed for the most critical combinations of dead loads, super-imposed loads, equipment loads, crane loads, wind loads, seismic loads, and temperature loads. In addition, loads and forces developed due to differential settlement shall also be considered.

Dead loads shall include the weight of structures, complete finishes, fixtures and partitions and should be taken as per IS:1911 (latest revision).

Super-imposed loads in different areas shall include live loads, minor equipment loads, cable trays, small pipe racks/hangers, and erection, operation and maintenance loads. Equipment loads shall constitute, if applicable, all load of equipments to be supported on the building frame.

For crane loads an impact factor of 30% and lateral crane surge of 10% of (lifted weight plus trolley weight) shall be considered in the analysis of frame according to provisions of IS:875 (latest revision). The horizontal surge shall be 5% of the static wheel load.

For temperature loading, the total temperature variation shall be considered as two thirds of the average maximum annual variation in temperature. The average maximum annual variation in temperature for the purpose shall be taken as the difference between the mean of the daily minimum temperature during the coldest month of the year and mean of daily maximum temperature during the hottest month of the year. The structure shall be designed to withstand stresses due to 50% of the total temperature variation.

Wind loads shall be computed as per IS:875. Seismic coefficient method shall be used for the seismic analysis as per IS 1893 (latest revision), wind and seismic forces shall not be considered to act simultaneously.

Floors/slabs shall be designed to carry loads imposed by equipment, cables, piping travel of maintenance trucks and equipment and other loads associated with the building. In general, floors shall be designed for live loads as per relevant IS and cable and piping loads not less than 5 kN/ sq.m hanging from the underside. In addition, beams shall be designed for incidental point loads of 20 kN to be applied at any point along the beams. The floor loads shall be subject to the approval of the Engg Incharge (Divisional Engr.).

For consideration of loads on structures, IS 875 "Code of practice for structural safety of buildings" shall be followed. The minimum superimposed live loads shown in Table 17.4.1 shall be considered for the design.

Roof	150 kg/ sq.m	for accessible roofs.
	75 kg/ sq.m	for non-accessible roof

BHEL, Transmission Business Group, Industry Sector, Noida-05

R C C Floors.	500 kg / sq m.	for offices and minimum 1000 kg / sq m. for equipment floors or actual requirement, if higher than 1000 kg / sq m., based on equipment component weight and layout plans.
Stairs and balconies.	500 kg / m.	
Toilet Rooms.	200 kg / m.	
Chequered plate floor.	400 kg /sq. m	
Walkways.	300 kg /sq. m.	

Table 17.4.1. Superimposed live loads

15.5 Submission of data for approval

The following information shall be submitted for review and approval to the Engg Incharge (Divisional Engr.):

- Design criteria for structural steel and reinforced concrete design. The criteria shall comprise the codes and standards used, applicable climatic data including wind loads, earthquake factors and maximum and minimum temperatures applicable to the building locations, assumptions of dead and live loads, including equipment loads, impact factors, safety factors and other relevant information.
- Structural design calculations and drawings including those for construction and fabrication for all reinforced concrete and structural steel structures.
- Fully dimensioned floor plans, cross sections, longitudinal sections and elevations of each building. These drawings shall be drawn at a scale not less than 1:50 and shall identify the major building components.
- Fully dimensioned drawings showing details and sections, drawn to scales of sufficient size to clearly show sizes and configuration of the building components and the relationship between them.
- Product information of building components and materials, including walls, partitions, flooring, ceilings, roofing, doors and windows and building finishes.
- A detailed schedule of building finishes including colour schemes.
- A door and window schedule showing door types and locations, door lock sets and latch sets and other door hardware.

Approval of the above information shall be obtained before ordering materials or starting fabrication or construction as applicable.

15.6 Electrostatic radio interference shielding

The building inside the energized area of the stations shall be electrostatically shielded to limit the exposure of the equipment and personnel to specified electric field strengths. The shielding system shall be grounded properly.

15.7 Control Room Building/Colony quarters

Design and construction, including anti termite treatment of control room building and colony quarters for each sub-station or switchyard shall be in the scope of the contract. The control room buildings and colony quarters shall be of RCC framed structure of concrete M20 grade. The control room and some other rooms of the control room building shall be fully air conditioned.

BHEL Transmission Business Group
Industry Sector
Noida-05

15.8 Finish Schedule

The preliminary indicative finishing schedule is given in subsequent clauses. However, at the time of detailed engineering, the Engg Incharge (Divisional Engr.) reserves the right to alter the finishing schedule and specifications and such changes shall have no additional financial implication whatsoever to the Employer.

15.9 Flooring (52 mm Thick)

50mm thick cement concrete 1:2:4, & finishing with vitrified tiles in the main control room area, conference room and MCCDB (AC & DC) room. The other area flooring shall be with vitrified tiles of reputed make. There shall be dado of 9 inches by the same. The toilets and bath rooms shall be provided with antiskid ceramic tiles and the walls are also to be provided with ceramic tiles of adequate height as per standard practice. The battery room floorings and walls (up to 3mtrs height) shall be provided with acid proof industrial based tiles. The left over portion of the walls shall be painted with acid proof paints.

15.10 Walls

Control room buildings shall have framed superstructure. All walls shall be non-load bearing walls. Minimum thickness of external walls shall be 230 mm with 1:6 cement sand mortar. A 50 mm thick DPC shall be provided at plinth level before starting masonary work.

15.11 Plastering

All internal walls shall have minimum 12mm thick 1:6 cement sand plaster. The ceiling shall have 6mm thick 1:4 cement sand plaster.

15.12 External Finish

All external surfaces shall have painted with weather proof synthetic paints over 18mm thick cement sand plaster in two layers. Under layer 12mm thick cement plaster 1:5 (1 cement:5 coarse sand) and a top layer 6mm thick cement plaster 1:3 (1 cement:3 coarse sand) finished rough with sponge.

All ceilings shall be white based plastic emulsion paints and the internal walls are also to be provided with plastic emulsion synthetic paints. The outer of the building shall be provided with weather seal coats of synthetic paints.

Painting details:

Following colour paints of *M/s Berger paints India Ltd., M/s Asian Paints India Ltd. & M/s Kansai Nerolac Paints Ltd.* with specified standards are to be followed for all type of buildings.

Sl. No.	Decsription	Berger Paints	Asian Paints	Nerolac Paints
1	Interior wall	3P 0778- Soft Light (Easy Clean)	7907-Candle Wick (AP Royale)	2016P- Lemon balm (Lotus Touch)
2	Exterior wall (body)	2P 0229-Calming Touch (Weather Coat Smooth)	8564- Sweet Dreams (Apex)	[illegible] Peach [illegible]
3	Exterior wall (border)	2A 0232- Cookie Crisp (Weather Coat Smooth)	8645-Rich Chocolate (Apex)	2798C- Kitty Kat (Lxcel)

The following procedure need be adopted for maintaining optimum quality & durability in painting the walls (both internal & external walls).

(a) Internal wall:

(i) The walls are to be applied with 2 coats of putty (JK/ Birla/ Bison make) of minimum 2 mm of thickness. After the first coat is applied, minimum of 2 days may be spared for drying up the wall. Then the second coat may be applied over the first coat so that 2mm thickness is achieved & uniformity is maintained

(ii) After applying the second coat, another 2 days may be spared & then sand paper is to be applied to remove the anomalies of the wall

BHEL Transmission Business Group
BHEL
Industry Sector
Noida-05

(iii) White primer (water thin-able solvent thin-able) of one coat (Berger/Nerolac/ Asian Paints) is to be applied.

(iv) Then two coats of colour paints are to be applied on the wall.

(b) **External wall:**

(i) One coats of primer (Weather Coat) are to be applied.

(ii) Then two coats of weather coat need to be applied on the wall. The two coats should be applied with an minimum interval of 12 hours in between.

15.13 Roof

Roof of the building shall consist of cast in situ R.C.C. slabs. Extra heavy water proofing treatment shall be done after grading underbed with 1:4 cement sand plaster of 25mm thickness. The under bed shall be laid to provide an ultimate run off gradient of 1:120. The extra heavy treatment shall be concrete based with water proof treatment as per the standard to protect the roof from damage due to water logging. Proper slope and adequate no of water drains outlets shall be provided for easy discharge of water from the roof. These drains shall be connected to the main drain.

15.14 Glazing (glass)

Minimum thickness of glazing shall be 6 mm. The glazing for the control room area which will be air-conditioned shall be provided with double toughned glass each of 6mm thickness. Other areas shall also have 6mm thick toughned glass.

15.15 False Ceiling

The control room and all other air conditioned areas shall have closed aluminium ceiling system comprising 84mm wide. 12.5mm deep panels of approved colour with a recessed flange of 23.9mm roll formed out of 0.5mm thick aluminium alloy 5050/5052/3003 or equivalent, coated with chromatised and stone enamelled on both sides, panels to be fixed on roll formed carriers 32 mm wide 39 mm deep out of minimum 0.9 mm thick aluminium alloy strip with cut outs to hold panels in a module of 100mm minimum at maximum 1.6 mc/c carrier suspended from roof by 4mm diameter galvanised steel wire rod hangers with special height adjustment springs/clips made out of spring steel at maximum spacing of 1.5 m c/c hangers fixed to roof, J'hooks and nylon insert including providing laying and fixing 25mm thick resin bonded mineral wool of approved quality, encased in 100 G black polythene and laid over top of places panels, all complete. The system is subject to approval by the Engg Incharge (Divisional Engr.) before installation. The following areas for [illegible] building shall have provision of false ceiling [illegible] SAS room, panel room, LT room, communi[illegible] [illegible]ference room, transit room, corridor etc [illegible] engineer in charge.

15.16 Doors and Windows

The doors and windows of the control room building shall be of UPVC (**Finesta/Vika make**: the size, thickness and model to be selected by the Owner) with aluminium grill (for windows: Ground floor of control room building & For all floor of Quarters/Transit house) and all the frames of doors and windows also of uPVC of higher suitable sections in accordance with the relevant IS/ISO/Any international Codes. Size and shapes shall be adequate for entering in to the room. In the Air conditioned area shall be double glass (toughened) and doors suitably made to have efficient air conditioning. The windows shall be of sliding type Anodised aluminium. The anodised transparent or dyed to required shade according to IS:1868 (minimum anodic coating of grade AC 15) fixed with rawl plugs and screws with fixing clips, or with expansion hold fastners including necessary filling up of gaps at junctions at top, bottom and sides with required PVC/neoprene felt etc and joined mechanically wherever required including cleat angle. Aluminium snap beading for glazing/panelling, C.P brass/stainless steel screws including glazing and fittings as specified) window grills work for windows to be considered, ventilators and other partitions shall be provided and fixed in the building with uPVC and other sections approved make confirming to IS/ISO standard.

Note: Doors and windows shall be of clear openable (door) and sliding (window) type with adequate locking facility. The door window frame shall be of uPVC of reputed make heavy sections with toughened glaze of 6mm & windows shall have aluminium grills (only GI external window). Windows shall be provided with vertical window blinder to protect from the sun ray. In the Air Conditioned area the glaze shall be double toughened.

BHEL Transmission Business Group Industry Sector Noida-05

The main entrance door of the control room building shall be Transparent Automatic Sensor Glass Door(Features 1. Open and close single or both the door.2. Sequence of adjustment 3. Can be integrated with most of access control system (RFID, Biometric etc) 4. Can be paired with upto 100 remote 5. Safely 12volts DC motors eliminating the dangers of electric shock hazard 6. Overload sensor provide instant stop upon contact with obstacle.7. Starting opening force adjustment 8. Open speed adjustment 9. Soft start and stop.10. Open buffer distance adjustment when open). The bath/toilet door & its frame shall be of uPVC of reputed make.

[illegible] entry door of the [illegible] sensor operated [illegible] shall be kept in the [illegible] officer in charge.

[illegible] buildings shall [illegible] accessing the [illegible] of the system

15.17 Plumbing And Sanitation

All plumbing and sanitation work shall be executed to comply with the requirements of the appropriate bye laws, rules and regulations of the Local Authority having juridiction over such matters. The Contractor shall arrange for all necessary formalities to be met in regard to inspection, testing, obtaining approval and giving notices etc.

An overhead water tank of adequate capacity depending on the number of users for 24 hours storage shall be provided.

PVC (Chlorinated polyvinyl chloride) pipes (IS 4985 (2000): Un plasticized PVC Pipes for Potable Water Supplies) water pipe of reputed manufacturer shall be used for internal piping works for portable water supply.

Sand C I pipes with lead joints conforming to IS:1729 shall be used for sanitary works above ground level.

A list of toilet fittings will be approved by the Engg Incharge (Divisional Engr.), before procurement by the contractor and same will be inspected by the Engg Incharge (Divisional Engr.) before installation. Sufficient nos of toilets and bath rooms including separate urinal provision shall be provided at both ground and first floors. Required nos of wash basins (stand type) with good quality mirrors and other accessories as required are also to be provided at both ground and first floor of control room building. Same procedure for colony quarters also.

The urinals shall be sensor based for automatic flushing with translucent glass partition between different urinals in the [illegible] toilet. There shall be minimum 2 Nos urinals in each gents toilet. The wash basin of the toilets shall have push type [illegible] which will switch off automatically to reduce wastage of water.

All the wash basins in the control room buildings including the ones in the toilet shall be placed on a countertop.

The [illegible] of the RB shall have provision of wash [illegible] wash basin and other sanitary provisions

Note: Provision of PHD and other fittings of reputed make (JAGUAR) for the control room building (in Toilets, wash room, overhead water tank of adequate capacity etc) of reputed make, provision of rain water discharge pipes at different locations and etc as per requirement and approved drawing. There shall be septic tank and soak pit of required capacity including complete sewage system as per approved drawing & technical specification & as per instruction of Engg- in-Charge. It includes supply of all types of materials of reputed make, labour etc to complete the work. Toilets (Provision of comboard & granite platform base standalone type wash basin) for Gents & Ladies to be provided including all good quality reputed fittings as per specification. The toilets & wash room shall have antiskid floor tiles & wall tiles of ceramic up to height of 8 feet. Provision of rain water discharge pipes at different locations and two nos of overhead water tank of 2000 ltrs capacity etc as per requirement and approved drawing. All bath room & toilet shall have water & termite proof doors and provision of sliding louvers with exhaust fan.

15.18 Building storm water drainage

The building design shall provide for the collection of storm water from the roofs. This water shall be collected in junction boxes and these boxes shall drain to the main drainage system of the station.

Cast iron rain water downcomers conforming to IS:1230 with water tight lead joints or medium class galvanised mild steel pipes conforming to IS:1239/ IS:3589, shall be provided to drain off the rain water from the roof. These shall be suitably concealed with masonry work of cement concrete or cladding material. The number and size of downcomers shall be governed by IS:1742 and IS:2527

All drains inside the buildings shall have minimum 40 mm thick grating covers and in areas subject to movement heavy equipment loads, precast RCC covers shall be provided in place of steel grating.

BHEL Transmission Business Group Industry Sector

For all buildings. suitable arrangement for draining water collected from equipment blowdowns. leakages. floor washings, fire fighting etc. shall be provided for each floor.

1.3 Flooring

Entire area around the control room building (out side) shall be provided with PCC paving starting from the building upto 2 mtrs clear distance for the full length of the building. The Paving shall be provided with chequered ceramic tile

The above specified PCC paving shall be with M15 mix grade concrete over suitable under bed arrangement as specified for other ground floor slab.

Above the PCC paving suitable Cement pavers chequered plate of size as per the standard to be provided. The colour of the chequered plate shall be fixed over the PCC paving by using cement mortar and the colour of such plate shall be red.

The cable vault below the main control room shall have 50 mm thick smooth floor finish units of cement concrete.

1.4 Provision of rooms in the control room building.

a) 220/132/33 KV S/S Building:

The plinth area for the control room building shall be as below:-

Ground floor: 50mtrX25mtr

Ground floor portico: 5mtrX5mtr (at two locations)

First floor: 25 mtr X 25 mtr

i)Ground floor shall have cable vault, Battery room, Office rooms(3 nos).MCCB room. Library. Conference room, Testing lab. Pantry room. Toilets and bath room(two nos and one attached). Corridor with lounge. Portico at front and side, Ramp etc.

ii) First floor shall have control room. PLCC room. office room, toilets and bath room etc

* All internal walls shall 125 mm thick. (Excluding cement plastering)
* All external walls shall 250 mm thick. (Excluding cement plastering)
* For RCC works refer the relevant specification.
* The quarter shall be of framed RCC structure based.
* Concrete grade shall be 1:1.5:3 for all RCC works
* Reinforcement shall be Fe 415 Grade. confirming to IS:1786. All hooks.bands,laps shall be as per IS 456-2000.All laps shall be staggered and minimum lap length shall be 50XDia of Bar.
* Clear cover to main reinforcement for footing = 50mm,column=50mm,beam=25mm & slab 20mm
* Rain water pipes 100 sq mm to be provided at suitable location.
* The stair case width=1100mm. Tread 300mm. riser=148/150mm and suitable platform at different level
* The height of the ground floor of the building from the finished plinth level (minimum 1.0 mtr from the finished ground level) shall be 3.9 mtrs and the height of the parapet wall shall be 750mm. The height of the first floor from the top of the roof of the first floor shall be 3.4 mtrs and the height of the parapet wall shall be 750mm.The stair case top shall be at a height of 2.75 mtrs from the top of the parapet top.
* The stair case shall be RCC having Granite stone fixing.

b) 132/33 KV & 220/33 KV S/S Building.

The plinth area for the control room building shall be as below:-

Ground floor: 42mtrX13 mtr =546 Sqm

BHEL Transmission Business Group Industry Sector Noida-05

Ground floor portico: 5mtrX5mtr

First floor: 21 mtr X 13 mtr=273 Sqm

i)Ground floor shall have Control room(also can be kept on the first floor for better visibility of switch yard area),PLCC room, Battery room, MCCDB room, ,Toilets and bath room, Verandah & Portico etc..

ii) First floor shall have office rooms (3 Nos), a Library, a Conference room, a Rest room, ,Pantry room ,toilets(2 No.) and toilet cum bath room (1 no.) etc

* All internal walls shall 125 mm thick. (Excluding cement plastering)
* All external walls shall 250 mm thick. (Excluding cement plastering)
* For RCC works refer the relevant specification.
* The quarter shall be of framed RCC structure based.
* Concrete grade shall be 1:1.5:3 for all RCC works
* Reinforcement shall be Fe 415 Grade, confirming to IS:1786. All hooks,bands,laps shall be as per IS:456-2000.All laps shall be staggered and minimum lap length shall be 50XDia of Bar
* Clear cover to main reinforcement for footing = 50mm,column =50mm,beam =25mm & slab=20mm.
* Rain water pipes 100 sq mm to be provided at suitable location.
* The stair case width=1100mm, Tread=300mm, riser=148/150mm and suitable platform at different level.
* The stair case shall be RCC having Granite stone fixing.
* The height of the ground floor of the building from the finished plinth level (minimum **1.0** mtr from the finished ground level) shall be 3.9 mtrs and the height of the parapet wall shall be 750mm. The height of the first floor from the top of the roof of the first floor shall be 3.4 mtrs and the height of the parapet wall shall be 750mm.The stair case top shall be at a height of 2.75 mtrs from the top of the parapet top.

** **Stair case of all type of buildings shall have stainless steel pf 304 grade in hand railing using 50mm dia of 2mm thick circular pipe with balustrade of size 32mmx32mmx32mm @0.90mtr C/C and stainless square pipe bracing of size 32mmx32mmx32mm in three rows in staircase as per approved design and specification, buffing, polishing.**

*** **Flooring with double charged vitrified digital tiles with dado in all the rooms,Bath and toilets shall be provided with anti skid ceramic digital tiles (wall of the same also to be provided with ceramic digital tiles),Acid proof industrial tiles to be provided on the floor and full wall of the battery room as per technical spec & approved drawings. Stair case & its landing platforms are to be provided with Granite flooring with single granite having round shape at the edge.**

**** **The battery room shall have 2 Nos exhaust fan (minimum 1 main + 1 backup). One exhaust fan should be able to discharge the corrosive fumes to outside with the other one acting as backup. The exhaust fans should be electrically interlocked such that if one exhaust fan fails the other will operate automatically. Relevant sufficiency calculation considering battery room size and exhaust fan capacity should be provided. A design calculation in this regard to be provided. The quantity of such fans are to be decided based on the calculation & accordingly the [illegible] provided.**

1.5 **Provision of rooms in the colony quarter (building).**

a) "D" **Type quarter**: Tentative plinth area shall be **120 sq mtrs (excluding the area of the portico)**. D type quarter shall have two bed rooms of size 3.6 mtrX3.6 mtr having porticos: one bed rooms of size 3.9 mtrX3.3 mtr having portico: one living room of size 4.2 mtrX3.6 mtr: one dining cum lobby of size 4.2 mtrX4.7 mtr: one kitchen of size 2.75mtrX3.3 mtr; Two nos attached toilet cum bath room of size 2.15 mtr X 1.5mtr, one no common toilet cum bath room of size 1.5mtr X 2.2 mtr. Portico and space for vehicle parking. The kitchen shall have provision of Kitchen platform (granite one) two sides of the wall with stainless steel sink having water tap provision as per standard practice. Kitchen room shall have provision of cupboard for storing the kitchen utensils and other items including locking arrangement of the cupboard. Provision of cup-boards in all other rooms as per standard

BHEL, Transmission Business Group
Industry Sector
Noida-05

practice shall be provided. Shall have stair case to go to the top of the roof and have stair case head room. A portico of adequate size in front of the quarter/flat to be provided to park the four & two wheeler vehicle.

b) **"E" Type quarter**: Tentative plinth area shall be **73 sq mtrs (excluding the area of the portico)** E type quarter shall have two bed rooms of size 3.3 mtrX3.3 mtr having porticos; one no attached toilet cum bath room of size 2.15 mtr X 1.5mtr, one no common toilet cum bath room of size 1.5mtr X 2.? mtr, one living room of size 4.5 mtrX3.3 mtr Portico and space for vehicle parking. The kitchen shall have provision of Kitchen platform (granite one) two sides of the wall with stainless steel sink having water tap provision as per standard practice. Kitchen room shall have provision of cupboard for storing the kitchen utensils and other items including locking arrangement of the cupboard. Provision of cup-boards in all other rooms as per standard practice shall be provided. Shall have stair case to go to the top of the roof and have stair case head room. A portico of adequate size in front of the quarter/flat to be provided to park the four & two wheeler vehicle

* All internal walls shall 125 mm thick (Excluding cement plastering)

* All external walls shall 250 mm thick. (Excluding cement plastering)

* For RCC works refer the relevant specification.

* The quarter shall be of framed RCC structure based.

* Concrete grade shall be 1:1.5:3 for all RCC works

* Reinforcement shall be Fe 500 Grade, confirming to IS:1786. All hooks, bands, laps shall be as per IS:456-2000.All laps shall be staggered and minimum lap length shall be 50XDia of Bar.

* Clear cover to main reinforcement for footing = 50mm,column=50mm,beam 25mm & slab=20mm.

* Rain water pipes 100 sq mm to be provided at suitable location.

* The stair case width- 1100mm.Tread -300mm, riser=148/150mm and suitable platform at different level.

* The stair case shall be RCC having Granite stone fixing.

* The height of the building from the finished plinth level (0.5 mtr from the finished ground level) shall be 3.15 mtrs i.e. up to the terrace level. A clear 1.15 mtrs shall be above the terrace and up to the top of the parapet. The stair case top shall be at a height of 2.75 mtrs from the top of the parapet top.

** **Stair case of all type of buildings shall have stainless steel pf 304 grade in hand railing using 50mm dia of 2mm thick circular pipe with balustrade of size 32mmx32mmx32mm @0.90mtr C/C and stainless square pipe bracing of size 32mmx32mmx32mm in three rows in staircase as per approved design and specification, buffing, polishing.**

*** **Flooring with double charged vitrified digital tiles with dado in all the rooms, Bath and toilets shall be provided with anti-skid ceramic digital tiles (wall of the same also to be provided with ceramic digital tiles),Acid proof industrial tiles to be provided on the floor and full wall of the battery room as per technical spec & approved drawings. Stair case & its landing platforms are to be provided with Granite flooring with single granite having round shape at the edge.**

**** All other provisions shall be as per the Control Room Building.

Installation of equipment on charge

...& Alarm system of the ... at strategic location suitable

At the time of provided as to

... the control room building to ... ies and direction of engineer in

* Details of doors & windows to be provided in the colony quarters are as indicated below

Doors & Windows for Quarter:

(a) Doors shall be of wooden finished, weather resistant and anti - termite with Supplying, fitting and fixing in position with well-dressed and well-seasoned Sal wood work framed and fixed (wrought and put up) small beams, purlins, burghs, truss, rafter and post of door including cost of iron work cutting grooves or holes and mending size where necessary

BHEL, Transmission Business Group
BHEL
Industry Sector
Noida-05

(b) Window shall be fully openable of UPVC (**Finesta/Vika make**: the size, thickness and model to be selected by the Owner) having 6mm toughened glaze with other accessories like locking, handle, stopper etc in complete shape as per TS.

Size and shapes shall be adequate for entering in to the room. The windows shall be provided with MS grill. The M.S grill and care should be taken while designing the grill frame that the entering of cat should be restricted. The MS Grill Surface cleaning, application of red oxide primer paint and two coats of synthetic enamel paint (Asian paints/Berger/Nerolac).

The door for the toilet cum bath room shall be of standard adequate size PVC door of best quality shall be provided.

The size of door & windows shall be of standard designed as National Building Code standard

The building design shall provide for the collection of storm water from the roofs. This water shall be collected in junction boxes and these boxes shall drain to the main drainage system of the station.

Cast iron rain water down comers conforming to IS:1230 with water tight lead joints or medium class galvanised mild steel pipes conforming to IS:1239/ IS:3589, shall be provided to drain off the rain water from the roof. These shall be suitably concealed with masonry work of cement concrete or cladding material. The number and size of down comers shall be governed by IS:1742 and IS:2527

All drains inside the buildings shall have minimum 40 mm thick grating covers and in areas subject to movement heavy equipment loads, precast RCC covers shall be provided in place of steel grating.

For all buildings, suitable arrangement for draining water collected from equipment blowdowns, leakages, floor washings, fire fighting etc. shall be provided for each floor

16. 0 MISCELLANEOUS GENERAL REQUIREMENTS

Dense concrete with controlled water cement ratio, preferably 0.45, shall be used for all underground concrete structures such as pump-house, tanks, water retaining structures, cable and pipe trenches etc. for achieving water-tightness.

All joints including construction and expansion joints for the water retaining structures shall be made water tight by using PVC ribbed water stops with general bulb. However, kicker type (externally placed) PVC water stops shall be used for the base slab and in other areas where it is required to facilitate concreting. The minimum thickness of PVC water stops shall be 5 mm and minimum width shall be 230 mm.

All steel sections and fabricated structures which are required to be transported by sea shall be provided with anti-corrosives paint.

All mild steel parts used in the water retaining structure shall be hot-dip galvanised. The minimum coating of the zinc shall be 750 gm/sq.m. for galvanised structures and shall comply with IS:2629 and IS:2633. Galvanizing shall be checked and tested in accordance with IS:2629. The galvanizing shall be followed by the application of an etching primer and dipping in black bitumen.

A screed concrete layer not less than 100 mm thick and of grade not weaker than M10 conforming to IS:456- 1978, shall be provided below all water retaining structures. A sliding layer of bitumen paper or craft paper shall be provided over the screed layer to destroy the bond between the screed and the base slab concrete of the water retaining structures

Bricks having minimum 75kg/sq.cm compressive strength can only be used for masonry work. Bidder shall ascertain himself at site regarding the availability of bricks of minimum 75kg/ sq.cm compressive strength before submitting his offer.

Monorails, monorail girders and fixtures shall be provided, wherever required.

Doors and windows on external walls of buildings other than areas provided with insulated metal claddings shall be provided with a RCC sun-shade over the openings with 300 mm projection on either side of the openings. Projection of sunshade from the wall shall be minimum 450 mm over window openings and 750 mm over door openings

All stairs shall have maximum riser height of 180 mm and a minimum tread width of 250 mm. Minimum width of stairs shall be 1200 mm. There shall be provision of of stair case to the roof of the building.

BHEL, Transmission Business Group
Industry Sector
Noida-05

Angles of 50x50x6 mm minimum with lugs shall be provided for edge protection all round cut out and openings in floor slab. edges of drains with grating covers, edges of RCC cable/pipe trenches with covers. edges of manholes with covers, edges of precast covers and any other place where breakage of corners of concrete is expected

Anti-termite chemical treatment shall be given to column pits. wall trenches. foundations of buildings. filling below the floors etc as per IS:6313 and other relevant Indian Standards.

Hand railing of a minimum height of 900 mm shall be provided around all floor or roof openings, projections and balconies walk ways, platforms, steel stairs etc. All handrails and ladder pipes shall be The railing of the staia-rcase shall be made of proper aluminium sections. All rungs for ladders shall also be of aluminium as per IS.

For RCC stairs, also hand railing with aluminium sections are to be provided

17. 0 INTERFACING

Proper coordination and execution of all interfacing civil works activities such as fixing of conduits in roofs/walls/floors, fixing of foundation bolts, fixing of lighting fixtures, fixing of supports/embodiments, provision of cut-outs etc. shall be the sole responsibility of the contractor. He shall plan all such activities in advance and execute in such a manner that interfacing activities do not become bottlenecks and such that dismantling, breakage etc is reduced to minimum.

8. WATER SUPPLY

The Contractor shall be overall responsible for supply of water within switch yard for fire fighting, drinking purposes and other miscellaneous purposes. Water shall be made available at a single point by the Employer. The scope is also inclusive of supply and erection of all tanks, pipes, fittings etc. required for the water supply to be taken from the terminal point to the respective buildings. A scheme shall be prepared by the contractor indicating the layout and details of water supply which shall subject to the approval of the Engg Incharge (Divisional Engr.) before actual start of work. Any extra bore holes required shall be within the scope of the contractor.

There shall be séparate bore wells for the control room building and colony quarters. There shall be pump houses for the bore wells and approach road to the pump houses shall be provided.

The Contractor shall have overall responsibility to provide a suitable arrangement for permanent supply for and retention of water within switch yard building and to the yard for watering to the earth pits, drinking purposes as well as for township and other miscellaneous purposes. The scope is inclusive 0f supply and erection of all tanks, pipes, fittings etc. required for the water supply to be taken from the terminal point/points to the respective buildings. A scheme shall be prepared by the contractor indicating layout and details of water supply which shall subject to the approval of the Engg Incharge (Divisional Engr) before commencement of work. Any extra bore wells required shall be within the scope of this contract. The capacity of each submersible pump shall be 5 HP and all control as per standard has to be provided. The no of bore wells shall be two nos , one for colony township and the other one for the switch yard building. Two nos pump house as per standard are also within the scope of this contract. The height of the pump house (LXW 3mtrsX3mtrs) shall be 3 mtrs and shall have RCC roof and brick walls having MS doors. The capacity of RCC overhead tank for control room building shall be 2000 liters each .Two nos of overhead water tank for control room building and for colony quarters each quarter shall have 1000 liters capacity.

There shall be interconnection between tow pump sections in order to meet any exigencies.

19. 0 STATUTORY RULES

The Contractor shall comply with all the applicable statutory rules pertaining to Factories Act (as applicable for ORISSA State). Fire Safety Rules of Tariff Advisory Committee, Water Act for pollution control etc

Provisions for fire proof doors, numbers of staircases, fire separation wall plastering on structural members (in fire prone areas) etc shall be made according to the recommendations of Tariff Advisory Committee

Statutory clearance and norms of State Pollution Control Board shall be followed as per Water Act for effluent quality from plant.

BHEL Transmission Business Group
Industry Sector
Noida-09

21.0 SECURITY WATCH TOWERS:

There shall be provision of security watch tower at the corners of the switch yard. These watch towers shall be of RCC type. Standard practice in this effect shall be followed. The maximum numbers of such towers shall be 4 The size of the tower platform shall be 2.5mtrsX2.5mtrs and height as per standard practice.

22.0SECURITY SHED NEAR THE MAIN GATE.

There shall be one RCC type security shed near the main gate to be provided. The shed shall have also provision of sitting arrangement for the guests. The shed shall be provided with telephone internal electrical lighting and ceiling fan facilities. There shall be provision of gate lights. The size of the security cum guest shed shall be 5mtrsX3.5mtrsX3.5mtr (LengthXwidthXHeight).A portion of the shed shall be used for the guest who comes for visit the sub-station. Adequate no of MS doors and windows are also to be provided. Necessary paintings as per standard are also to be done. The security shed shall be provided with [illegible] connection with security [illegible] security management system (such as My Gate or equivalent installed in the security shed [illegible] visitor management system.

23.0 PROVISION OF STORE SHED, PLAT FORM, RAMP AND WINCH FOR LIFTING MATERIALS & VEHICLE PARKING SHED.

23.1 One no store shed of size 10X10 mtr having brick walls and plastering with RCC roof of 10X10 meters. The flooring shall be of 75 mm thickness PCC (mix ratio1:2:4) over RR masonry works (as per standard practice of flooring). Provision of adequate nos of MS racks (proper paintings also to be done as per the direction of site in charge) for keeping the spare materials. The height of the shed shall be 4mtrs above the plinth. Store shed door shall have access control system which is sensor operated with key card for entry. Log of all the persons accessing the store shed with date and time stamp shall be kept in the system. There shall be provision for manual override of the system for exigencies as per direction of engineer.

23.2 One no platform outside the store shed RR masonry (compacted) with PCC at the top for storing the transformer bushings. Instrument transformers, transformer oil drums etc. The size of the platform shall be 15mtrX10 mtr. Details of flooring as mentioned under 23.1. The platform shall have top covers by using TATA GC sheets.

23.3 Provision of a RCC based ramp of adequate size for loading and unloading of the materials from the lorry near the store shed.

23.4 A winch is to be provided near the ramp for lifting and lowering of materials up to 5 tons capacity. The two side vertical pillars shall be by MS Rail/joist and the top horizontal also of same type. A chain pulley of 5 ton capacity is to be provided at the centre of the frame on the horizontal bar.

23.5 Erection of Isolator Mechanism Box.

Separate RCC foundation to be provided for the Isolator Mechanism boxes.

23.6 There shall be one no vehicle parking shed inside the sub-station area. The size of the parking area shall be 15mtrs X 15 mtrs, out of the entire area there shall be provision of shed for 5 mtrs X 15 mtrs and rest of the area shall be without shed. The flooring of the entire area of the vehicle parking shall be as mentioned under 23.1.

24.0 ANTIWEED TREATMENT AND SITE SURFACING

SCOPE OF WORK

The contractor shall furnish all labour, equipment and materials required for complete performance of the work in accordance with the drawings, specification and direction of the Engg Incharge (Divisional Engr.)

General Requirement

The material required for site surfacing/gravel filling shall be free from all types of organic materials and shall be of standard approved quality, and as directed by the Engg Incharge (Divisional Engr.)

The Contractor shall furnish and install the site surfacing to the lines and grades as shown in the drawing and in accordance with the requirements and direction of the Engg Incharge (Divisional Engr.). The soil of the periphery

BHEL Transmission Business Group
Industry Sector

area of the switchyard area shall be subjected to sterilisation or anti-weed treatment before placing the site surfacing/gravel fill material or strictly as per instruction or requirement of the manufacturer of the chemical required for soil sterilisation or anti-weed treatment. After all the structures and equipment have been erected and accepted, and soil sterilisation of the peripheral area (except the switch yard area) as specified is complete, the site shall be maintained to the lines and grades indicated in the drawing and rolled or compacted by using three ton roller with suitable water sprinkling to form a smooth and compact surface condition which shall be matching with finished ground level of the switchyard area

Chemical to be used for soil sterilisation /anti-weed treatment:

The details of quantities and method of application of chemicals used for soil sterilisation /and anti-weed treatment shall be as per manufacturer's recommendations. Bidders are required to submit the details of chemicals proposed to be used and recommendations of manufacturer with required guarantee alongwith their bids for necessary approval of the Engg Incharge (Divisional Engr.) Approval of the Engg Incharge (Divisional Engr.) by no means shall relieve the contractor of their contractual obligations as stipulated in General and Special Conditions of Contract.

25.0 PROVISION OF GARDEN INFRONT OF CONTROL ROOM BUILDING AND PLANTATION OF PLANTS (FRUIT BEARING & OTHER SHOW PLANTS):

A garden in front of the control room building is to be developed. It includes treatment of the land of size (30mtrsX10mtrs), manuring, and plantations of sufficient flower based, show based, crotons and entire portion shall be provided with garden grass. Proper land slope also to be maintained for better and aesthetic looking. Provision of water taps and garden lights at different locations are to be provided for watering the plants and lighting of the garden.

100 nos fruit bearing plants and 100 nos other show plants along the road side, near colony quarters and near control room building are required to be planted. Treatment of the soil and manuring are to be done before plantation of these plants. Water taps at different locations are to be provided for watering the plants.

26.0 RAINWATER HARVESTING:

In addition to drainage of rainwater, the contractor shall make arrangement for rainwater harvesting also.

Rainwater harvesting shall be done by providing two numbers recharge structures with bore wells. The recharge structures shall be suitably located with in the S/S. Branch drains from the main drain carrying rainwater from entire switchyard shall be connected to the recharge structures.

The internal diameter of recharge shafts shall be 4.5 meter with 230mm thick lining of brick work upto a depth of 2.0 meter from ground level and 345mm thick brickwork below 2.0 meter depth. The brickwork shall be constructed with cement mortar 1:6 (1 cement : 6 coarse sand). The overall depth of shaft shall be 5.0 meter below invert level of drain. The shaft shall be covered with RCC slab for a live load of 300Kg. per Sq.m two openings of sizes 0.7X0.7 meter shall be provided in the RCC cover slab as shown in the drawing. An iron cover made of 5mm thick chequered plate with hinges shall be provided in the openings. Galvanized M.S. rungs of 20mm diameter at spacing of 300mm shall be provided in the wall of the shaft below the opening of the RCC slab to facilitate cleaning of shaft.

A 300mm diameter bore well shall be drilled in the centre of the shaft The depth of bore well shall be 5.0 meter more than the depth of the sub soil water.

A 100mm diameter medium duty MS pipe confirming to IS 1161 shall be lowered in the bore well keeping bail plug towards bottom of bore well The pipe shall have 1.58mm holes for 4.0 meter length starting from 1.0 meter from bottom of bore well Holes of 3.0mm dia Shall be provided for a length of 2.0 meter starting from

BHEL, Transmission Business Group
Industry Sector
Noida-05

the bottom level of coarse sand and downwards. The overall length of the pipe shall be equal to the total depth of the bore well plus depth of shaft.

Gravel of size 3mm to 6mm,shall be filled around 100 dia MS pipe in the bore well. The shaft shall be filled with 500mm thick layers each from the bottom of shaft with boulders of size 50mm to 150mm, gravel of size 5mm to 10mm, coarse sand having particle size 1.5mm to 2.0mm and boulders of size not less than 200mm respectively.

27.0 Fire water Tank. This is a lump-sum item. The contractor shall be required to complete the work in all respect as per requirement.All the items including excavation, compaction, brick work, roof truss, corrugated A.C.Sheet roofing, all types of miscellaneous steel internal and external plastering, painting, etc shall be deemed to be included in this lump-sum water tank. However the concrete (all types), reinforcement and the steel embedments(except roof truss & purlins) shall be measured and paid on lumpsum basis.

MORE ON CIVIL WORKS

I) WATER SUPPLY (EXTERNAL)

(i) Water shall be made available by Owner (unless stated otherwise elsewhere) at any feasible point near scope boundary at single point to the contractor. Contractor shall state the total water requirement both in terms of quantity and head to the Owner.

(ii) The contractor shall carry out all the external plumbing/erection woks required for supply of water to the control room building beyond the single point as at (i).

(iii) The contractor shall carry out all the plumbing/erection woks required for supply of water to fire water tank beyond the single point as at (i).

(iv) A scheme shall be prepared by the contractor indicating the layout and details of water supply which shall be got approved from the Owner before actual start of work including all other incidental items not shown or specified but as may be required for complete performance of the works.

(v) Bore wells and pumps for water supply is not in the scope of contractor

II) TECHNICAL DETAILS OF THE BUILDINGS

1 12mm cement plaster of mix 1:6 (1 cement: 6 fine sand) shall be provided on the smooth side of internal walls.

2. 6mm cement plaster of mix 1:3 (1 cement: 3 fine sand) to all ceiling

3. 15mm cement plaster of mix 1:6 (1 cement: 6 fine sand) on rough side of single or half brick wall.

4 12mm thick per-laminated three layer medium density (exterior grade) particle board Grdel, Type II conforming to IS 12823 bonded with phenol formaldehyde synthetic resin of approved brand and manufacture shall be provided in paneling fixed in aluminium doors, windows shutters and partition frames with C P brass/stainless steel screws etc. complete as per architectural drawings and directions of engineer-in charge

5 Dis tempering on all internal walls and ceilings with oil bound washable distemper of approved brand and manufacture to give an even shade (two or more coats) over and including priming coat with cement primer

BHEL Transmission Business Group Industry Sector Noida-05

6. Enamel Painting with synthetic enamel paint of approved brand and manufacturer of required colour to give an even shade shall be provided on the steel glazed doors, windows, ventilators and rolling shutters in various buildings as specified in drawings. Two or more coats over an under coat of suitable shade with primer paint of approved brand and manufacture

7 Two or more coats of French spirit polishing with a coat of wood filler shall be provided on the wooden doors of Control Room building

8. ACDB and DCDB room in Conrtrol Room building and FPH building shall be provided 52mm thick cement concrete flooring with "Hardcrete concrete hardener topping under layer 40mm thick cement concrete 1:2:4 (1 cement :2 coarse sand 4 graded stone aggregate 20mm nominal size) and top layer 12mm thick metallic concrete hardener consisting of mix 1:2 (1 cement hardener mix:2 stone aggregate 6mm nominal size) by volume with which "Hardcrete" hardening compound of "Snowcem India Ltd" or equivalent is mixed @ litre "hardcrete" per 50kg of cement including cement slurry, complete. (In ACDB/DCDB Room and FFPH building only)

9. Cement plaster skirting (up to 15 cm height) with cement mortar 1:3 (1 cement:3 coarse sand) mixed with metallic concrete hardener in same ratio as for floor finished with a floating coat of heat cement. 21 mm thick in ACDB/DCDB room.

10. Floor tiles of Polished porcelain (vitrified) in different sizes with water absorption less than 1% and flexural strength not less than 30 N/mm^2 in all colours and shades, laid on 20mm thick cement mortar 1:4 (1 cement: 4 coarse sand) including grouting the joints with white cemen5t and matching pigments shall be provided as mentioned in drawings. Size of Tile shall be 50X50 cm

11 1st Quality Ceramic glazed floor tiles (anti-skid) 300 x 300mm (thickness to be specified by the manufacturer) of 1st quality conforming to IS.13755 of NITCO, ORIENT, SOMANY, KAJARIA or equivalent shall be provided in toilet/pantry area in all colour shades as approved by Engg-incharge laid on 20mm thick cement mortar 1:4 (1 cement: 4 coarse and) including pointing the joints with white cement and matching pigment etc complete.

12. 1st quality ceramic glazed tiles confirming to IS 13753 of minimum thickness 5mm of approved make like NITCO, ORIENT, SOMANY, KAJARIA or equivalent make shall be provided in toilet/pantry area in all colours shades of any size as approved by Engg-incharge in dados (height as specified in drawings) over 12mm thick bed of cement mortar 1:3 (1 cement.3 coarse sand) and jointing with grey cement slurry @3.3kg per sqm including pointing in white cement mixed with pigment of matching shade complete.

13. 13mm polished granite in cement mortar 1:4 20mm thick made to a level cut to size shall be provided and laid as specified in drawings. The joints are filled with jointing compound matching to the tiles. Wherever granite tiles are specified for the floor. 100mm granite skirting shall be provided with the walls. The granite outer surface shall be flushed to the plaster finish of the wall.

14 Granite counter shall be provided and fixed in the pantry with 18mm granite slab mounted on 75mm RCC slab supported by 115mm brick wall plastered on all sides as per the drawing The shelves are made of 18mm thick well cut and polished white marble slabs. The outer side of the brick wall and the RCC slab visible in the front is finished with 18mm granite with edges molded on the exposed end. The shutters shall be finished with 19mm particle finished laminate edge lapping. The shutters are to be provided with 100mm handless and shutter locks. The inside of the shutter shall be painted with synthetic enamel paint.

15 All Brick work shall be with cement mortar 1:6 (1 cement :6 coarse sand). Half brick work masonry shall be with cement mortar 1:4 (1 cement 4 coarse sand) Bricks used shall be of class-75.

16 Anti termite treatment shall be carried out for all buildings.

17 M S Rolling shutters as per drawing shall be provided and fixed interlocked together through their entire length and jointed together at the end by end locks mounted on specially designed pipe shaft with

BHEL, Transmission Business Group
Industry Sector
Noida-05

brackets along with ball bearing for rolling shutter, side guides and arrangements for inside and outside locking with push & pull operation including the cost of providing and fixing necessary 15.5 cm long wire springs grade No.2 and M S. top cover of required thickness for rolling shutters. 80 x 1.25mm M.S. laths with 1 25mm thick top cover

18. Circular/hexagonal M S sheet ceiling fan box shall be provided in the ceiling with clam p of internal dia. 140mm, 73mm height 3mm thick rim. top and bottom lid of 1.5mm M S sheet Lids shall be screwed in to M S box by means of 3mm round headed screws, clamps shall be made of 12mm dia M.S bar bent to shape s peer standard drawing with over all length as 80 cm

19 Anodised aluminum work for doors, windows, ventilators and partitions shall be provided and fixed in control room building with extruded built up standard tubular and other sections of approved make conforming to IS: 7333 and IS:1285, anodized transparent or dyed to required shade according to IS 1868 (Minimum anodic coating of grade AC 15) fixed with raw plugs and screws or with fixing clips, or with expansion hold fasteners including necessary filling up of gaps at junctions at top, bottom and sides with required PVC/neoprene felt etc and joined mechanically wherever required including cleat angle, Aluminium snap beading for glazing/paneling, C.P. brass/stainless steel screws including glazing and fittings as specified.

Shutters of doors, windows and ventilators shall be provided and fixed with hinges/pivots fittings wherever required including PVC/neoprene gasket.

(a) **SPECTION FOR AL. WINDOWS:**

Shutters bottom section-61.85x37x45.5 WS 1027, 1.058 Kg/mt, side and top section 61.85X31.75, WS 1029. 0.650 Kg/mt, shutter sections, one side and both side open 40X18X10 WS 1023, 0.433 Kg/mt, Interlock sections 40X18X26.5X10, WS 1022, 0.530 Kg/mt. with 4 mm plain float glasses, PVC gaskets, Nylon wheels, Aluminium handles cum locks. Indal/Indal/Hinalco make as per drawing.

(b) **SECTION FOR AL. DOORS:**

Anodised aluminum work for doors, windows, ventilators and partitions shall be provided and fixed in control room building with extruded built up standard tubular and other sections of approved make conforming to IS: 7333 and IS:1285, anodized transparent or dyed to required shade according to IS:1868 (Minimum anodic coating of grade AC 15) fixed with raw plugs and screws or with fixing clips, or with expansion hold fasteners including necessary filling up of gaps at junctions at top, bottom and sides with required PVC/neoprene felt etc and joined mechanically wherever required including cleat angle, Aluminium snap beading for glazing/paneling, C.P. brass/stainless steel screws including glazing and fittings as specified.

Shutters of doors, windows and ventilators shall be provided and fixed with hinges/pivots fittings wherever required including PVC/neoprene gasket.Anodised aluminum work for doors, windows, ventilators and partitions shall be provided and fixed in control room building with extruded built up standard tubular and other sections of approved make conforming to IS: 7333 and IS 1285 anodized transparent or dyed to required shade according to IS:1868 (Minimum anodic coating of grade AC 15) fixed with raw plugs and screws or with fixing clips. or with expansion hold fasteners including necessary filling up of gaps at junctions at top, bottom and sides with required PVC/neoprene felt etc and joined mechanically wherever required including cleat angle. Aluminium snap beading for glazing/paneling. C.P brass/stainless steel screws including glazing and fittings as specified.

Shutters of doors. windows and ventilators shall be provided and fixed with hinges/pivots fittings wherever required including PVC/neoprene gasket with 5 5 mm plain float glasses and rubber gasket with bottom three feet pre-laminated sheet of 12mm thick of colour grey ivory Jindal/Indal/Hindalco make as per drawing

(c) SECTION FOR AL. PARTITION

BHEL Transmission Business Group
Industry Sector
Noida-05

Outer frames 2-1/2 x 1-1/2 63.5 x 38.10 X 1.5mm, DP 1212, 0.700 Kg/mt, to work as fixed partition & door with door verticals 44 45 x 47.62 x 1.5mm, DP 2022, 0..850 Kg/mt, top and center pieces as per drawing.

20. Cement based water proofing treatment of roofs balconies, terraces etc. shall be provided with average thickness of 120 mm and minimum thickness at Khurra as 65 mm and laid consisting of following operations:

(a) A slurry coat of neat cement using 2 75 kg/m2 of cement admixed with proprietary water proofing compounds conforming to IS: 2645 shall be applied and grouted over the RCC slab including cleaning the surface before treatment.

(b) Plain Cement concrete 1.5 10 (1 Cement 5 fine sand . 10 burnt brick aggregate of 40 mm nominal size) admixed with proprietary water proofing compound conforming to IS:2645 over 20 mm thick layer of cement mortar of min :5 (Cement 5 coarse sand) admixed with proprietary water proofing compound conforming to IS: 2645 to required slope an treating similarly the adjoining walls upto 300 mm height including rounding of junctions of walls and slabs

(c) After two day of proper curing a second coat of cement slurry admixed with proprietary water proofing compound conforming to IS:2645 shall be applied.

(d) The surface shall be finished with 20 mm thick joint less cement mortar of mix 1:4 (1 cement :4 course sand) admixed with proprietary water proofing compound conforming to IS : 2645 and finally the surface shall be finished with trowel with neat cement slurry and making of 300 x 300 mm square.

(e) The whole terrace so finished shall be flooded with water for a minimum period of two weeks for curing and for final test. All above operations shall be done in order an as directed and specified by the Engineer-in charge.

21.Unplasticised rigid PVC rain water pipes 110 mm dia shall be provided and fixed on the wall face conforming to IS : 13592 type A as per drawing including jointing with seat ring conforming to IS:5382 leaving 10 mm gap for themal expansion single socketed pipes.

22.Unplasticised PVC Moulded fittings / accessories including 110 mm bend and 110 mm shoes shall be provided and fixed for uplasticised rigid PVC rain water pipes conforming to IS 13592 type A including jointing with seat ring conforming to IS 5382 leaving 10 mm gap for thermal expansion

- Unplasticised PVC pipe clips of approved design shallbe provided and fixed to uplasticised 110 mm PVC rain water pipes by means of 50x50x50 mm hard wood plugs, screwed with MS screws of required length including cutting brick work and fixing in cement mortar 1:4 (1 cement 4 coarse sand) and making good the wall etc.

- Double action hydraulic floor spring of approved brand and manufacture IS 6315 marked "hardwyn" make (model 3000) or equivalent for doors shall be provided and fixed at the following door including cost of cutting floors as required embedding in floors and cover plates with brass pivot and single piece MS sheet outer box with slide plate etc. as per the direction of Engineer- in charge With stainless steel cover plate:

  (a) Main Entrance to Control Room Building
  (b) Sub-Station In charge room
  (c) Conference Room
  (d) Control Room

BHEL, Transmission Business Group
Industry Sector
Noida

- Plinth protection 50 mm thick of cement concrete 1:2:4 (1 cement .2 coarse sand . 4 graded stone) aggregate 20 mm nominal size) shall be laid over 75 mm bed of dry brick ballast 40 mm nominal size well rammed and consolidated and shall be grouted with fine sand including finishing the top smooth

- Coloured vitreous china pedestal type water closet (European type) with seat and lid, 40 mm flush bend. overflow arrangement with specials of standard make and mosquito proof coupling of approved municipal design including painting of fittings and brackets, cutting and making good the walls and floors shall be provided for all toilets.

- Coloured vitreous china wash basin of size 630 x 450 mm with C.I / M.S brackets alongwith single 15 mm C.P brass pillar taps, Kingston / Gem / Techno / Parko. 32 mm C.P brass waste of standard pattern, shall be provided and fixed in the toilets including painting of fittings and brackets, cutting and making good the walls wherever required alongwith C.P brass trap and C.P brass union.

- All urinals shall be coloured vitreous china flat back half stall urinal of 580 x380x350 mm with 10 litre PVC automatic flushing cistern, Parryware / Hindware / Seabird / Orient (Coral) with fittings, standard size C.P. brass flush pipe, speaders with unions and clamps (all in C.P. brass) with waste fitting as per IS 2556 C.I trap with outlet grating and other couplings in C.P brass including painting of fittings and cutting and making good the walls and floors wherever required.

- Following fittings shall be provided in all the toilets

(a) Toilet paper roll holder.

(b) Double type coat & hat hooks with flanges. fixed to wall / shutter, etc. with necessary screws, washers & plugs.

(c) CP / PP liquid soap holder of approved make fixed with each wash basin to the wall with necessary CP / PP brackets, CP screws, washers, plugs etc.

(d) 100 mm dia vitreous chinaware half round channel of approved make fixed to correct grade, level opening for floor trap below urinals set in CM 1.3 & pointed using white cement etc.

(e) CP brass bid cock 15 mm nominal bore of approved quality conforming to IS : 8931.

(f) CP brass angle valve of 15 mm nominal bore provided and fixed in position for basin and cistern points of approved quality conforming IS . 8931.

(g) Best quality marble partition slab provided and fixed in position for urinals, of size 610 x 1150 mm. 20 mm thick, polished on both sides & machine cut. exposed corners rounded etc.

(h) Towel rail of approved make of 600 mm length 25 mm dia with a pair of brackets or flanges provided and fixed to wall beside each wash basin / set of wash basin with necessary screws, plugs, etc.

(i) 6 mm thick beveled edge mirror 1000 x 600 mm shall be provided and fixed mounted on 12 mm thick water proof plywood backing and hardwood beading all-round and mirror fixed to the backing with 4 Nos of CP cap screws & washers, including fixing the mirror to the wall with necessary screws, plugs & washers etc with each wash basin.

(j) Salem Stainless steel A ISI 304 (18/8) Kitchen sink of 510 x 1040 mm Bowl depth 178 mm with drain board shall be provided and fixed as per IS 13983 with C.I Brackets and stainless steel plug 40 mm including painting of fittings and brackets cutting and making good the wall

23) GI Pipe work for Internal and External works

BHEL, Transmission Business Group
Industry Sector
Noida-05

i) All concealed GI pipe shall be painted with anticorrosive bitumastic paint including cutting of chases and making good the wall.

ii) All exposed GI pipes and fittings shall be painted with synthetic enamel paint of desired shade over a ready mixed priming coat, both of approved quality for new work.

iii) Wherever GI pipe are buried the same shall be provided and laid in position including trenching sand cushion and refilling painted with anticorrosive bitumastic paint etc.

iv) Gun metal ball valve with operating levers, non-return valves conforming to IS specification shall be provided and fixed in position as per drawing or direction of Engineer-in-charge

24) Masonry chamber for sluice valve shall be 600x600mm size in plan and depth 750mm, or matching with the site condition inside with 50 class designation brick work in cement mortar 1 5 (1 cement :5 fine sand) with CI surface box 100mm Top diameter, 160mm bottom dia and 180mm deep (inside) with chained lid and RCC top slab 1:2 .4 mix (1 cement .2 coarse sand: 4 graded stone aggregate 20 mm nominal size) necessary excavation foundation concrete 1:5:10 (1 cement:5 fine sand 10 graded stone aggregate 40mm nominal size) and inside plastering with cement mortar 1:3 (1 cement 3 coarse sand) 12 mm thick finished with a floating coat of neat cement complete as per standard design with FPS bricks of class 75.

25) Polyethylene water storage tanks (2 nos. of 2000 litres capacity each) shall be provided and placed on roof of control room building of approved brand and manufacturer with cover and suitable locking arrangement, float value and making necessary holes for inlet, outlet and overflow pipes.

26) PVC floor traps of self cleansing design shall be provided & fixed in position with outlet size of 75mm diameter of approved make, including making connection with PVC soil/waste pipes using rubber gaskets, embedding the trap in 150mm thick PCC 1:2:4, providing & fixing of top tile & strainer of CP or PVC on top of the trap etc.

27) Square-mouth SW gully trap grade "A" 100x100mm size P type with FPS Bricks class designation 75 shall be provided and fixed complete with CI grating brick masonry chamber with water tight C.I. cover with frame of 300x300mm size (inside) the weight of cover to be not less than 4.5 Kg and frame to be not less than 2.70 Kg as per standard design.

28) Glazed stoneware pipes of 150mm diameter grade 'A' shall be provided. laid and jointed with stiff mixture of cement mortar in the proportion of 1:1 (1 cement: 1 fine sand) including testing of joints etc. complete.

29) Cement concrete 1:3 6 (1 cement:3 coarse sand:6 graded stone aggregate 40 mm nominal size) shall be provided and laid around S W pipes including bed concrete.

30) Brick masonry manhole shall be constructed in cement mortar 1:4 (1 cement:4 coarse sand) RCC top slab with 1:2:4 mix (1 cement:2 coarse sand: 4 graded stone aggregate 20mm nominal size) foundation concrete 1:4:8 mix (1 cement:4 coarse sand.8 graded stone aggregate 40mm nominal size) inside plastering 12mm thick with cement mortar 1 3 (1 cement:3 coarse sand) finished with floating cot of neat cement and making channels in cement concrete 1 2 4 (1 cement:2 coarse sand:4 graded stone aggregate 20mm nominal size) finished with a floating coat of neat cement complete3 as per standard design

a) Inside size shall be 90 x 80 cm and 60 cm deep including CI cover with frame (light duty) 455 x 610 mm internal dimensions total weight of cover and frame shall not be less than 38 kg (weight of cover 23 kg and weight of frame 15 kg) and shall be constructed with F P.S. bricks with class designation 75

b) Inside size shall be 120 x 90 cm and 90 cm or more deep including CI cover with frame (medium duty) 500 mm internal diameter total weight of cover and frame to be not less than 116 kg (weight of cover 58 Kg and weight of frame 58 kg0 with FPS Bricks class designation 75

BHEL, Transmission Business Group
Industry Sector
Noida-05

31) MS foot of 20 x 20 mm square rests shall be provided and fixed in manholes with 20 x20 x10 cm cement concrete blocks 1.3.6 (cement 3 coarse sand 6 graded stone aggregate 20 mm nominal size) as per standard design

32) Steel glazed doors, windows and ventilators of standard rolled steel section shall be provided and fixed in FFPH building, joints mitred and welded with 15 x 3 mm lugs. 10cm long, embedded in cement concrete blocks 10 x 10 x 10 cm of 1.3 6 (1 cement 3 coarse sand 6 graded stone aggregate 20 mm nominal size0 or with wooden plugs and screws or rawls plus and screws or with fixing clips or with bolts and nuts as required, including providing and fixing of glass panes with glazing clips and special metal sash putty of approved make complete including applying a priming coat of approved steel primer, necessary hinges or pivots as required.

33) Pressed steel door frames manufactured from commercial mild steel sheet fo 1.25 mm thickness shall be provided and fixed in FFPH building including hinges jamb, lock jamb, bead and if required angle threshold of mild steel angle of section 50x 25 mm or base ties of 1.25 mm pressed mild steel welded or rigidly mixed together by mechanical means, adjustable lugs with split end tail to each jamb including steel butt hinges 2.5 mm thick with mortar guards, lock strike-plate and shock absorbers as specified and applying a coat of approved steel primer after pre-treatment of the surface as directed by Engineer-in-charge

34) Asbestos cement 6 mm thick corrugated sheets roofing shall be provided and fixed with G I J or L hooks, blots and nuts 8 mm diameter G, I plain and bitumen washers complete excluding the cost of purlins, rafters and trusses for water tank.

(III) MODE OF MEASUREMENT ON CIVIL WORKS

(a) Earthwork

This shall include excavation in all kinds of soil including rock, all leads and lifts including back filling, compacting, de-watering (if required) and disposal of surplus earth to a suitable location The quantity of excavation for foundations of towers, equipment structures, all transformers, rail-cum-road, firewall, cable trenches, water tank, reactors and buildings shall only be measured. The quantity of excavation for roads, drains, rainwater harvesting, septic tank, soak pit. external water supply system, site surfacing (graveling), chain link fencing (including gate0 shall not be measured separately and shall be deemed to be included in the composite rates quoted by the bidder for the respective works. All other excavation required for the completion of the work including fixing of lamp posts. plinth protection, flooring sewerage system, manholes, popes, earthmat etc. shall also not be paid for The measurement of excavation of all concrete works shall be made considering dimension of the pit leaving 150 mm gap around the base pad (lean concrete) or actually excavated pit, whichever is less. The quantity shall be measured in cubic meters.

(b) PCC

Providing and laying Plain Cement Concrete of all types and at all locations including all leads and lifts The quantity shall be measured in cubic meters as per lines and levels indicated in the drawings

(i) PCC 1:2:4 (1 cement . 2 sand 4 coarse aggregate 20 mm nominal size) shall be measured in flooring of buildings, plinth protection, fencing, transformer foundation. reactor foundation , rail track drain. culverts. septic tank, chain link fencing, gate etc. as indicated in the drawings.

(ii) PCC 1:4:8 (1 cement 4 coarse sand 8 stone aggregate, 40 mm nominal size) shall be measured below all foundations of buildings, cable trench. roads under flooring, rail-cum-road, transformer foundation reactor foundation, drain, water tank. culverts. gate etc. as indicated in the drawings.

(iii) All other PCC required for the completion of the work including hold fasts of doors / windows / rolling shutters, fixing of plumbing pipes, bedding concrete for sewer lines, embedment of electrical conduits etc. shall not be measured and deemed included in the composite rates quoted by the bidder for respective works. Water proofing compound wherever specified shall be added without any extra cost.

(c) RCC

Measurement of reinforced cement concrete at all locations shall be made and shall include all leads lifts formwork grouting of pockets and underpinning (but shall exclude reinforcement) of mix 1 1.5:3 (1 cement 1 5 coarse sand 3 stone aggregate 20 mm nominal size) This shall also include pre-cast RCC work and

BHEL Transmission Business Group Industry Sector Noida-05

addition of water proofing compound wherever required for which no additional payment shall be made. The quantity shall be measured in cubic meters as per lines and levels indicated in the drawings No deduction shall be made for volume occupied by reinforcement / inserts sleeves and for openings having cross-sectional area up to 0.1 sq m.

(d) Steel Reinforcement

Reinforcement shall be measured in length (actual of theoretical as per drawing whichever is less) including hooks. if any separately for different diameters as actually used in work, excluding overlaps. From the length so measured. the weight of reinforcement shall be calculated in tones on the basis of sectional weights as adopted by Indian Standards. Wastage, overlaps, couplings, welded joints, spacer bars, chairs, stays, hangers and annealed steel wire or other methods for binding and placing shall not be measured and cost of these items shall be deemed to be included in the rates for reinforcement.

(e) Stone filling

Measurement of stone (40mm nominal size) for transformer foundations shall be made as per theoretical volume of the space to be filled in the transformer foundation as per drawings. This shall be measured in cu m.

1.1 **Miscellaneous structural steel.**

Measurement for Supply, fabrication, transportation and erection of all miscellaneous structural steel work for mono rails (RS joists), rails for transformers/ reactors trusses, frame work, purlins, gratings, steel tubes, built up sections along with all other steel fittings and fixtures inserts and embedment in concrete shall be made as per drawings. The unit rate for this item shall be inclusive of cutting, grinding, drilling, bolting, welding, pre-heating of the welded joints, applying a priming coat of steel primer and anti corrosive bitumastic paint/ synthetic enamel paint etc. (wherever specified), setting of all types of embedment in concrete, etc. steel required for foundation bolts, nuts and bolt, doors, windows ventilators. louvers, rolling shutters, chain link fencing, gratings in drains, soil pipes, plumbing pipes. floor traps, embedments required for rainwater harvesting, septic tank, soak pit, roof truss and purloins required for fire water tank, etc. shall not be considered for payment and measurement.

Quantity shall be measured in Kg.

1.2 Roads

The measurement for the concrete roads shall be measured as per the UNIT OF MEASUREMENT specified in the BOQ along with the entire line of the road and shall include all items such as excavation, compaction. rolling. watering, WBM, Kerb stone, grating, inter locking tiles etc. complete as per drawing but excluding concrete and reinforcement.

The measurement of bituminous road shall be measured on LOT basis along the center line of the road and shall include all items such as excavation, compaction. rolling watering, sub case course, WBM, Bitumen, pre mix carpet complete as per drawing

1.3 Drain

The measurement of drains shall be measured on LOT basis along the center line of the drain and shall include excavation compaction, RCC of Grade M-20 plastering grating weep holes etc. complete as per approved drawing and as per the instruction of Engineer-In-Charge

(f) Antiweed Treatment and Stone Spreading

The measurement shall be done as per the UNIT OF MEASUREMENT specified in the BOQ for the actual area in square meters of stone spreading provided in the switchyard and shall include anti weed treatment including material and providing and spreading of 100mm thickness of uncrushed/crushed/broken stone of 40mm nominal size as per the specification for the specified area.

(g) Chain Link Fencing and gate.

BHEL, Transmission Business Group
Industry Sector
Noida-05

The measurement shall be made in running meters of the fence provided as per drawing. The rate shall be including the post, fencing. MS Flat etc. complete but excluding the concrete. The gate shall be measured in numbers.

(h) Fire Fighting Pump House

This is lump sum item Contractor has to assess the quantity as per drawings of control room cum administrative building. Fire Fighting Pump House and quote for the same for each building separately This shall include following items.

1) External plastering: 18 mm cement plaster of mix: 1:4 (1 cement 4 coarse sand) including all grooves as specified
2) Providing and applying two or more coats of Novakote exterior flat paint over an under coat of suitable pliolite based primer nova prime on new cement plaster surfaces of the buildings inclusive of required tools, scaffolding, materials and other painting accessories etc. as per recommendations of manufacturer

(i) Hume Pipe

Hume pipe shall be measured diameter-wise and laid as per the drawings and shall be measured in running metres. The item shall be inclusive of excavation, laying, back filling, jointing etc. excluding concrete and reinforcement (if any).

(j) Building.

This is a lump sum item for each building. The entire work required to complete the building in all respect as per the drawings approved by the Owner shall be deemed to be included in this lump sum rate.

(k) Rain Water Harvesting:

This is a lump sum item. The contractor shall be required to complete the work in all respect as per drawings approved by the Owner All the items including excavation, miscellaneous steel. bricks work, fillings of boulders, gravel, sand, pipe, concrete (all types) and the reinforcement etc. shall be deemed to be included in this lump sum rate.

(l) Septic Tank and Soak Pit.

This is a lump sum item. The contractor shall be required to complete the work in all respect as per drawings furnished by the Owner All the items including excavation, masonary work, all types of fillings all types of pipes including plumbing and vent pipes, all type of fittings, concrete (all types) and the reinforcement etc. shall be deemed to be included in this lump sum rate.

(m) Fire Water Tank.

This is a lump sum item The contractor shall be required to complete the work in all respect as per drawings furnished by the Owner All the items including excavation, compaction brick work, roof truss, corrugated AC Sheet roofing. all types of miscellaneous steel, internal and external plastering, painting, concrete (all types) and the reinforcement etc. shall be deemed to be included in this lump sum cost

(n) External water supply from Bore-well to Fire water tank.

The external water supply from Bore-well shall be on LOT basis. It shall include all the items such as excavation, piping, fittings, painting. brick work. sand filling, concrete, valves, chambers cutting chases in walls, openings in RCC and repairs etc. required to complete the job.

(III) MISCELLANEOUS GENERAL REQUIREMENTS:

(a) Dense concrete with controlled water cement ratio as per IS-code shall be used for all underground concrete structures such as pump-house. tanks, water retaining structures. cable and pipe trenches etc for achieving water-tightness.

(b) All joints including construction and expansion joints for the water retaining structures shall be made water tight by using PVC ribbed water stops with central bulb However kicker type (externally placed) PVC water stops shall be used for the base slab and in other areas where it is required to facilitate

BHEL, Transmission Business Group
Industry Sector
Noida-05

concreting The minimum thickness of PVC water stops shall be 5 mm and minimum width shall be 1230 mm.

(c) All mild steel parts used in the water retaining structures shall be hot-double dip galvanized The minimum coating of the zinc shall be 750 gm/sq.m for galvanized structures and shall comply with IS:2629 and IS:2633. Galvanizing shall be checked and tested in accordance with IS:2633 The galvanizing shall be followed by the application of an etching primer and dipping in black bitumen in accordance with BS:3416.

(d) Bricks having minimum 75 kg/cm2 compressive strength can only be used for masonry work Contractor shall ascertain himself at site regarding the availability of bricks of minimum 75 kg/cm2 compressive strength before submitting his offer

(e) Angles 50x50x5 mm (minimum) with lugs shall be provided for edge protection all round cut outs/openings in floor slab, edges of drains supporting grating covers, edges of RCC cable/pipe trenches supporting covers, edges of manholes supporting covers, supporting edges of manhole precast cover and any other place where breakage of comers of concrete is expected.

(f) Anti termite chemical treatment shall be given to column pits, wall trenches, foundations of buildings filling below the floors etc. as per IS.6313 and other relevant Indian Standards.

(g) For all civil works covered under this specification, nominal mix byu volume batching as per CPWD specification is intended. The relationship of grade of concrete and ratio of ingredients shall be below

	Nom Mix.	Cement	Sand	Coarse aggregate of 20mm down grade as per IS: 383
1.	M 10	1	3	6
2.	M 15	1	2	4
3.	M 20	1	1.5	3

(h) The material specification, workmanship and acceptance criteria shall be as per relevant clauses of CPWD specification and approved standard Field Quality Plan, Items/components of buildings not explicitly covered in the specification but required for completion of the project shall be deemed to be included in the scope.

(IV) INTERFACING

The proper coordination & execution of all interfacing civil works activities like fixing of conduits in roofs/walls/floors, fixing of foundation bolts. fixing of lighting fixtures fixing of supports/embedment. provision of cut cuts etc shall be the sole responsibility of the Contractor He shall plan all such activities in advance and execute in such a manner that interfacing activities do not become bottlenecks and dismantling, breakage etc is reduced to minimum.

(V) STATUTORY RULES.

* Contractor shall comply with all the applicable statutory rules pertaining to factories act (as applicable for the State) Fire safety Rules of Tariff Advisory Committee. Water Act for pollution control etc.

* Statutory clearance and norms of State Pollution Control Board shall be followed as per Water Act for effluent quality from plant.
* Requirement of sulphate resistant cement (SRC) for sub structural works shall be decided in accordance with the Indian Standards based on the findings of the detailed soil investigation
* All building/construction materials shall conform to the best quality specified in CPWD specifications if not otherwise mentioned in this specification
* All tests as required in the standard field quality plans have to be carried out

BHEL, Transmission Business Group
Industry Sector
Noida 05

000343

ODISHA POWER TRANSMISSION CORPORATION LIMITED

STANDARD FIELD QUALITY PLAN
FOR SWITCHYARD CIVIL WORKS.

Section: FOUNDATION MATERIALS

Sl. No.	Component/Operation & Description of Test	Sampling Plan with basis	Ref. Document & acceptance	Testing Agency.	Remarks	Check
1.	CHECKING OF FOUNDATION MATERIAL					
A)	CEMENT					
I) ii) iii) iv) v)	Fineness Compressive Strength Initial & final setting time Soundness Heat of Hydration for low heat cement (Not applicable for OPC & PPC)	One sample per lot of 100 MTR or part thereof from each source for MTCs and one sample per lot of 200 MT or part thereof from each source for site testing.	IS:456, IS:269,IS.8112 IS:12269, IS:1489 & OPTCL specification	Manufacturer/ As per OPTCL approved lab.	Review of manufacturers test certificates (MTCs) and laboratory test results by OPTCL	
vi)	Chemical Composition of Cement	One sample per lot of 100 MT or part thereof from each for MTCs	IS:456, IS.269,IS:8112 IS:1489 & OPTCL specification.	Manufacturer	Review of manufacturers test certificates by OPTCL	
B)	COARSE AGGREGATES					
I) ii) iii) iv) v) vi) vii) viii) ix)	Determination of Particle size (Sieve Analysis) Flakiness Index Crushing Value Specific Gravity* Bulk Density* Absorption Value* Moisture Content* Soundness of Aggregate** Presence of deleterious materials * Applicable Design concretes only	One sample per lot of 100 cubic meter or part thereof from each source for each size ** Applicable to concrete work subject to frost action.	IS:383, IS:2386 and OPTCL specification	OPTCL approved lab However, Moisture content test for design mix concrete shall be done on all day of concreting at site	Each source to be approved by OPTCL Review and acceptance of test result by OPTCL	
C)	FINE AGGREGATE					
I) ii) iii) iv) v)	Gradation/Determination of particle size (Sieve Analysis) Specific Gravity and density Moisture content Absorption Value Bulking	One sample per lot of 100 cubic meter or part thereof from each source	IS:383,IS.2386, IS.456 and OPTCL specification	OPTCL approved lab However Moisture content test	Each source to be approved by OPTCL Review and acceptance	

BHEL, Transmission Business Group
Industry Sector
Noida-05

vi) vii)	Silt Content Test Presence of deleterious materials			for design mix concrete shall be done on all days of concreting at site.	of test result by OPTCL	
D)	BRICKS					
i) ii) iii) iv)	Dimension tolerance Compressible Strength Water Absorption Efflorescence		OPTCL Specification.	OPTCL approved Lab.	Approved by OPTCL	
E)	WATER					
i)	Cleanliness (Visual Check)	Random	IS.456, IS:3025 and OPTCL specification. The water used for mixing concrete shall be fresh, clean and free from oil, acids and alkalies, organic materials, or other deleterious materials.	Contractor	Each source to be approved by OPTCL	
	Chemical & Physical properties of water for checking its suitability for construction purposes * Applicable to design mix concrete only.	One sample per source	IS:456, IS:3025 & OPTCL specification.	Contractor/ OPTCL Approved Lab.	Approved by OPTCL	

BHEL, Transmission Business Group
Industry Sector
Noida-05

ODISHA POWER TRANSMISSION CORPORATION LIMITED
(Quality Assurance & Inspection Deptt.)

Sl. No.	Component/Operation & Description of Test	Sampling Plan with basis	Ref. Document & acceptance norm	Testing Agency.	Remarks	Check
	REINFORCEMENT STEEL					
i)	Identification & size	Random	IS:432 IS 1139 IS 1786 & OPTCL	Contractor	Approved by OPTCL	
ii)	Chemical Analysis test	One sample per heat.	Specification IS:432. IS:1139. IS:1786 OPTCL	Manufacture r	Review of manufacturer s test certificate by OPTCL	
iii)	Tensile Test	One sample per lot of 40MT or part thereof for each size of steel conforming to IS:1139 and 5 MT or part thereof for HDS wire for each size of steel as per IS:432. For steel as per IS:1786 under 10mm 1 sample for each 25 MT or part thereof. 20 mm-16 mm I sample for each 35 MT or part thereof Over 16mm 1 sample for each 45 MT or part thereof	Specification			
iv)	Yield stress/proof stress			Manufacture rs/ OPTCL approved Lab.	Review of manufacturer s test certificates as well as lab. Test results by OPTCL	
v)	Percentage Elongation		IS:432 IS 1139. IS:1786 OPTCL Specification			
vi)	Bent/re-bend Test	One sample per lot of 20MT or part thereof for each size of steel as per IS:432. IS:1139 For steel as per IS:1786 under 10mm-16mm 1	IS:432. IS:1139. IS.1786 OPTCL Specification	Manufacture rs/ OPTCL	Review of manufacturer s test certificates as well as lab Test results by OPTCL	

BHEL Transmission Business Group Industry Sector Noida-16

vii)	Reverse Bend Test for HDS wire	sample for each 25MT or part thereof 10mm-16mm 1 sample for each 45 Mt or part thereof. One sample per lot of 5MT or part thereof for each size.	IS:432, IS:1139, IS:1786 OPTCL Specification.	Manufacturers/ OPTCL approved Lab	Review of manufacturers test certificates as well as lab. Test results by OPTCL	

THE INFORMATION ON THIS DOCUMENT IS THE PROPERTY OF BHARAT HEAVY ELECTRICALS LIMITED. IT MUST
NOT BE USED DIRECTLY OR INDIRECTLY IN ANY WAY DETRIMENTAL TO THE INTEREST OF THE COMPANY

PLANT NORTH

HOUSE

HOUSE

EXISTING FENCE

EXISTING BUS BPI AS PER SURVEY

EXISTING MAIN BUS 2

EXISTING TATA BAY TOWER 3
(NEW GANTRY TO BE MATCHED)

EXISTING TATA BAY TOWER 2

EXISTING MAIN BUS 1

EXISTING TATA BAY TOWER 1
(NEW GANTRY TO BE MATCHED)

TOWARDS EXISTING ROAD

3.75m WIDE ROAD

3.75m WIDE ROAD

3.75m WIDE ROAD

7.0m WIDE ROAD

EXISTING 7.0m WIDE ROAD

SPR

DUBURI SS BOUNDARY WALL

DUBURI SS BOUNDARY WALL

MAIN EARTH CONDUCTOR(PRESENT SCOPE): 40mm DIA MS ROD CONDUCTOR, 700mm BELOW FGL.

CONNECT TO EXISTING MAIN MAT

RISER FOR CONNECTION TO EQUIPMENT/ ABOVE GROUND RISERS.

(E) ELECTRODE : 40mm DIA., 3m LONG, VERTICAL MS ROD WITH NON TREATED TEST PIT.

(PE) ELECTRODE WITH TEST PIT: 50mm DIA., 3m LONG, VERTICAL PERFORATED GI PIPE WITH TREATED EARTH PIT.

ZONE	REV.	DATE	ALTERED CHD/APPD

ZONE	REV.	DATE	ALTERED CHD/APPD

ZONE	REV.	DATE	ALTERED CHD/APPD

PROJECT: 400/220kVGIS SUBSTION AT ERASAMA, ODISHA &
400kV AIS FEEDER BAY EXTENSION AT DUBURI, ODISHA

OWNER: ODISHA POWER TRANSMISSION CORPORATION LIMITED

BHARAT HEAVY ELECTRICALS LTD.
TRANSMISSION BUSINESS GROUP
NOIDA

	NAME	SIGN.	DATE
DRN.	NS	-sd-	19-04-23
CHD.	SKS	-sd-	19-04-23
APPD.	SKS	-sd-	19-04-23

REF. TO ASSY. DRG. N.A.

DEPT. TBG CODE	UNTOL. DIMS. GR. g/M/f	SCALE	WEIGHT (KG)	CARD CODE
		N.T.S	N.A.	NA

TITLE
EARTHING LAYOUT FOR 400kV AIS
SUB STATION EXTN. AT DUBURI

DRG.NO. TB-1-420-316-008-D

SHT. No	NO. OF SHT.	ITEM NO.	NO.OF ITEMS	NO.OF VAR.
01	02	N.A.	N.A.	N.A.

REV. 00

SIZE-A1

FIRST ANGLE PROJECTION

DRG. NO. TB-1-420-316-008-D

(ALL DIMENSIONS ARE IN mm)

THE INFORMATION ON THIS DOCUMENT IS THE PROPERTY OF BHARAT HEAVY ELECTRICALS LIMITED. IT MUST NOT BE USED DIRECTLY OR INDIRECTLY IN ANY WAY DETRIMENTAL TO THE INTEREST OF THE COMPANY

NOTES:–

1. THE EARTHING SYSTEM SHOWN IS SCHEMATIC. EXACT LOCATION OF EARTH CONDUCTOR, RISER PIGTAILS, ROD ELECTRODES, PIPE ELECTRODES WITH TEST PIT SHALL BE DETERMINED AT SITE AS PER SITE CONDITIONS.
2. ALL EQUIPMENT AND STRUCTURES SHALL, IN GENERAL, BE GROUNDED AT TWO POINTS AT OPPOSITE CORNERS WHETHER SHOWN IN DRAWING OR NOT AND THESE SHALL BE CONNECTED TO DIFFERENT PARTS OF THE MATS WHEREVER POSSIBLE IN ADDITION ALL EARTHING AS PER TYPICAL EARTHING DETAIL IN DRG. NO. TB–4–420–316–009–D TO BE FOLLOWED.
3. SPACING OF BURIED CONDUCTOR SHALL BE 5M IN BOTH DIRECTIONS AS FAR AS POSSIBLE EXCEPT WHERE ADDITIONAL CONDUCTORS ARE SHOWN FOR GROUNDING OF MAJOR STRUCTURAL COLUMNS/BUILDINGS/EQUIPMENT.
4. THE GROUNDING MAT (40mm DIA. MS ROD) SHALL BE BURIED AT 700mm BELOW FGL.
5. CONNECTION WITH EQUIPMENT EARTHING PAD SHALL BE BOLTED TYPE; CONNECTION BETWEEN EQUIPMENT GROUNDING LEADS AND MAIN GROUND CONDUCTORS SHALL BE WELDED TYPE. FOR RUST PROTECTION THE WELDS SHALL BE CLEANED WITH WIRE BRUSH, TREATED WITH RED PRIMER AND AFTERWARDS THICKLY COATED WITH BITUMEN.
6. ALL GROUND CONNECTIONS SHALL BE MADE BY ELECTRIC ARC WELDING. ALL WELDED JOINTS SHALL BE ALLOWED TO COOL DOWN GRADUALLY TO ATMOSPHERIC TEMPERATURE BEFORE PUTTING ANY LOAD ON THEM. ARTIFICIAL COOLING SHALL NOT BE ALLOWED.
7. ALL ARC WELDING OF LARGE DIAMETER CONDUCTORS SHALL BE DONE BY NORMAL LOW HYDROGEN CONTENT ELECTRODES.
8. IN CASE HIGH TEMPERATURE IS ENCOUNTERED AT SOME LOCATION THE EARTHING CONDUCTOR SHALL BE LAID MINIMUM 1500mm AWAY FROM SUCH LOCATIONS.
9. EARTHMAT FOR THE PRESENT SCOPE SHALL BE SUITABLE CONNECTED TO THE EXISTING STATION'S MAIN MAT.
10. ALL STEEL COLUMNS & RCC COLUMNS WHETHER SPECIFICALLY SHOWN OR NOT, SHALL BE CONNECTED TO EARTHING SYSTEM.
11. WHEREVER EARTHING CONDUCTOR CROSSES UNDER GROUND SERVICE DUCTS, PIPES, TRENCHES, RAILWAY TRACKS ETC., IT SHALL BE LAID MINIMUM 300MM BELOW OR AT A SUITABLE DEPTH TO CLEAR THEIR CIVIL WORKS, THE EARTHING CONDUCTOR SHALL BE RE–ROUTED IN CASE IT FOULS WITH EQUIPMENT FOUNDATIONS ALREADY ERECTED.
12. GROUNDING CONDUCTOR AROUND THE BUILDING SHALL BE BURIED IN EARTH AT A MINIMUM DISTANCE OF 2m FROM THE OUTER WALL / FOUNDATION / BOUNDARY OF THE BUILDING.
13. EACH EARTHING LEAD FROM THE NEUTRAL OF REACTOR, EACH SURGE ARRESTER & EACH CVT SHALL BE DIRECTLY CONNECTED TO TWO INDEPENDENT PIPE ELECTRODES WITH TEST PITS WHICH IN TURN SHALL BE CONNECTED TO STATION EARTH GRID. MINIMUM 5000mm SPACING BETWEEN PIPE ELECTRODES SHALL BE PROVIDED.
14. EARTHING TERMINAL OF LIGHTNING DOWN CONDUCTOR (FROM TOWER WITH PEAK, LM, BUILDINGS) CORNERS OF FENCE SHALL BE DIRECTLY CONNECTED TO ROD ELECTRODE WHICH IN TURN SHALL BE CONNECTED TO STATION EARTHING GRID.
15. LOCATION OF PIPE ELETRODES, PE & ROD ELECTRODES, E ARE SHOWN TENTATIVELY.
16. EARTHMAT SHOULD BE LAID 2m BEYOND PRESENT SCOPE FENCE.
17. 50X6 MM GI FLAT SHALL BE USED FOR EARTHING OF CABLE TRENCHES ALL TRENCHES SHALL BE EARTHED THROUGH RISERS AT AND INTERVAL OF 20m ALONG THE LENGTH OF THE TRENCH & AT ALL BENDS OF THE TRENCHES.
18. GROUNDING CONDUCTORS EMBEDDED IN CONCRETE SHALL HAVE APPROXIMATELY 50MM CONCRETE COVER. IF GROUNDING CONDUCTOR IS REQUIRED TO BE EMBEDDED IN MAJOR FOUNDATIONS, THEN IT SHALL BE LAID IN A SLEEVE.
19. RAILWAY TRACKS WITHIN SWITCHYARD AREA SHALL BE BONDED ACROSS FISH PLATES AND CONNECTED TO EARTHING GRID AT SEVERAL LOCATIONS.
20. RISERS FOR KIOSK, JB, IREACTOR/ISOLATOR/CB MBs ARE NOT SHOWN FOR THE SAKE OF CLARITY. FOR TYPICAL DETAILS PLEASE REFER SEPARATE EQUIPMENT EARTHING DRG. NO. TB–4–420–316–009–D.
21. CONDUCTORS SHALL BE LAID AFTER COMPLETION OF ADJACENT COLUMN/ EQUIPMENT FOUNDATIONS. LAYING OF GROUND CONDUCTORS SHALL BE SEQUENTIALLY COORDINATED WITH THE ERECTION OF ALL UNDERGROUND FACILITIES CABLE TRENCH, SUMP PITS, DRAINS ETC.
22. GROUNDING CONDUCTORS ALONG THEIR RUN ON CABLE TRENCH, LADDER, COLUMNS, BEAMS, WALLS, ETC, SHALL BE SUPPORTED BY SUITABLE WELDING/CLEATING AT AN INTERVALS OF 1.5m. GROUNDING CONDUCTOR ALONG CABLE TRENCHES SHALL BE ON THE WALL NEAR TO THE EQUIPMENT. WHEREVER A GROUNDING CONDUCTOR PASSES THROUGH WALL, FLOORS ETC GALVANIZED IRON SLEEVE SHALL BE PROVIDED FOR THE PASSAGE OF THE CONDUCTOR. BOTH END OF THE SLEEVE SHALL. BE SEALED TO PREVENT THE PASSAGE OF WATER THROUGH THE SLEEVE.
23. ALL STEEL COLUMNS, METALLIC STAIRS ETC. SHALL BE CONNECTED TO THE NEAREST GROUNDING CONDUCTOR BY GROUNDING LEADS. ELECTRICAL CONTINUITY SHALL BE ENSURED BY BONDING THE DIFFERENT SECTIONS OF HAND RAILS AND METALLIC STAIRS.
24. METALLIC PIPES, CONDUITS AND CABLE TRAY SECTION FOR CABLE INSTALLATION SHALL BE BONDED TO ENSURE ELECTRICAL CONNECTION TO GROUNDING CONDUCTOR AT NOT MORE THAN 20m INTERVAL APART FROM INTERMEDIATE CONNECTION, BOTH ENDS SHALL ALSO BE CONNECTED TO THE GROUNDING SYSTEM.
25. WHEREVER GROUNDING CONDUCTOR CROSSES OR RUNS ALONG METALLIC STRUCTURES SUCH AS GAS/WATER/STEAM CONDUIT/PIPES ETC. AND STEEL REINFORCEMENT OF CONCRETE. IT SHALL BE BONDED TO THE SAME.
26. FOR EQUIPMENT, FENCE, GATE, AUXILIARY EARTH MAT, ELECTRODES ETC. DETAILS REFER EQUIPMENT EARTHING DETAILS DRAWING NO. TB–4–420–316–009–D.
27. EVERY POST OF FENCE AND GATE SHALL BE CONNECTED TO EARTH GRID BY ONE LEAD.
28. THE EARTHING LAYOUT SHOWN IN DRAWING IS FOR BASIC UNDERSTANDING PURPOSE ONLY. THE CONDUCTOR SPACING CAN BE CHANGED SLIGHTLY TO SUIT THE SITE CONDITIONS,
29. THIS DRAWING IS TO BE READ FOR EARTHING/ GROUNDING FOR OUTDOOR SUB–STATION AREA ONLY.

PIPE ELECTRODE WITH TEST PIT (PE)

SN	EQUIPMENT/ FACILITY	ELECTRODES PER EQPT.	NO. OF EQUIPMENT	TOTAL NO. OF ELECTRODES
1	REACTOR	02	02	04
2	390kV LA	02	12	24
3	400kV CVT	02	06	12
TOTAL NO. OF PIPE ELECTRODES				40

ROD ELECTRODES (E)

SN	EQUIPMENT/ FACILITY	ELECTRODES PER EQPT.	NO. OF EQUIPMENT	TOTAL NO. OF ELECTRODES
1	CONTROL ROOM BUILDING	04	01	04
2	FENCE	01	02	02
3	TOWER WITH PEAKS/LM	01	19	19
TOTAL NO. OF ROD ELECTRODES				25

* FOR EQUIPMENT, FENCE, GATE, AUXILIARY EARTH MAT, ELECTRODES ETC. & NO. OF RISER DETAILS REFER EQUIPMENT EARTHING DETAILS DRAWING NO. TB-4-420-316-009-D.

ZONE	REV.	DATE	ALTERED CHD/APPD

PROJECT: 400/220kVGIS SUBSTION AT ERASAMA, ODISHA & 400kV AIS FEEDER BAY EXTENSION AT DUBURI, ODISHA

OWNER: ODISHA POWER TRANSMISSION CORPORATION LIMITED

BHARAT HEAVY ELECTRICALS LTD. TRANSMISSION BUSINESS GROUP NOIDA

	NAME	SIGN.	DATE
DRN.	NS	-sd-	19.04.23
CHD.	SKS	-sd-	19.04.23
APPD.	SKS	-sd-	19.04.23

DEPT. TBG: CODE | UNTOL. DIMS: GR. g/M/F | SCALE N.T.S | WEIGHT (KG) N.A. | REF. TO ASSY. DRG. N.A. | CARD CODE NA | DRG.NO. TB-1-420-316-008-D | SHT. No 02 | NO. OF SHT. 02 | ITEM NO. N.A. | NO.OF ITEMS N.A. | NO.OF VAR. N.A. | REV. 00

TITLE: EARTHING LAYOUT FOR 400kV AIS SUB STATION EXTN. AT DUBURI

DRG. NO. TB-1-420-316-008-D

FIRST ANGLE PROJECTION

(ALL DIMENSIONS ARE IN mm)

SIZE-A1

LEGEND

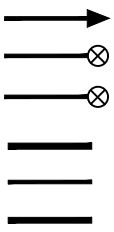

CONNECTION TO GROUND MAT THROUGH RISER

RE CONNECTION TO ROD ELECTRODE WITH NON TREATED TEST PIT.

PE CONNECTION TO PIPE ELECTRODE WITH TREATED EARTH PIT

75X10 G.I. FLAT

50x6mm GS FLAT

40mm DIA MS ROD

GENERAL NOTES:

1 EARTH STRIP CLEATED TO LATTICE /PIPE TYPE STRUCTURE AT AN INTERVAL OF 1.0M SUITABLE PROVISION SHALL BE MADE WITH SUPPORT STRUCTURE.
2 ALL EARTH STRIPS SHALL BE TAKEN ALONG EDGE OF STRUCTURE. ALL DRAWING SHOWS TYPICAL ARRANGEMENT ONLY.
3 ALL STRUCTURES/EQUIPMENTS SHALL BE EARTHED AS SHOWN IN THE FOLLOWING SHEETS.
4 BOLT SIZE FOR CONNECTING EARTHING FLAT TO THE EQPT/STRUCTURE SHALL BE TO SUIT RESPECTIVE HOLE SIZE.
5. ALL EARTHING SHALL BE DONE IN ACCORDANCE WITH IS:3043 UNLESS OTHERWISE STATED IN TECHNICAL SPECIFICATION
6 EACH RISER OF A PARTICULAR EQUIPMENT SHALL BE CONNECTED TO A DIFFERENT EARTHROD (EITHER HORIZONTAL OR VERTICAL CONDUCTORS OF MAIN EARTHMAT).
7 FOR WELDING DETAILS REFER SHEET #19 & 20.
8 E/WIRE DOWN CONDUCTOR SHALL BE CLEATED AT AN INTERVAL OF 2.0 M ALONG WITH STRUCTURE .

SHEET NO.	DESCRIPTION
01.	TITLE
02.	EARTHING NOTES
03.	MATERIAL & SIZES OF BELOW & ABOVE GROUND EARTHING
04.	400kV POST INSULATOR
05.	390kV & 120kV SURGE ARRESTER
06.	400kV HORIZONTAL DOUBLE BREAK ISOLATOR WITH ONE EARTH SWITCH (TYPICAL)
07.	AUXILIARY EARTH MAT FOR ISOLATOR MAIN MECH.,E/S MECH. BOX
08.	A– Circuit Breaker, B– Current Transformer, C– CVT
09.	REACTOR
10.	TOWER WITH PEAK
11.	LIGHTENING MAST (LM)
12.	GATE/FENCE POST
13.	CABLE TRENCH
14.	RAIL BONDING
15.	PIPE EARTH ELECTRODE WITH TREATED PIT
16.	ROD ELECTRODE WITH TEST PIT
17.	CONTROL AND RELAY PANELS/BATTERY CHARGER/ AC DC BOARDS/MLDB
18.	TYPICAL ARRANGEMENT OF BOLTED JOINTS
19.	WELDING DETAILS
20.	WELDING DETAILS

COPY RIGHT AND CONFIDENTIAL
The information on this document is the property of BHARAT HEAVY ELECTRICALS LIMITED
It must not be used directly or indirectly in any way detrimental to the interest of the company.

FILE NAME : 100_M03BR0

REV.	DATE	ALTERED / CHECKED / APPROVED	REV.	DATE	ALTERED / CHECKED / APPROVED
ZONE			ZONE		

PROJECT: EQUIPMENT EARTHING PHILOSOPHY & DETAILS FOR 400kV AIS SUB STATION EXTN. AT DUBURI

OWNER: ODISHA POWER TRANSMISSION CORPORATION LIMITED

BHARAT HEAVY ELECTRICALS LTD
TRANSMISSION BUSINESS GROUP
NOIDA

DEPT CODE		NAME	SIGN	DATE
M	DESN	NS		
	CHD	NS		
	APPD	SKS		

TITLE: EQUIPMENT EARTHING PHILOSOPHY AND DETAILS FOR 400kV AIS SUB STATION EXTN. AT DUBURI

DEPT. | SCALE | SIGN | DATE

DRAWING NO. TB-4-420-316-009-D

SHEET 01 OF 20 REV. 00

FORMAT SIZE A4

BELOW AND ABOVE GROUND EARTHING CONDUCTOR DETAILS :-

REFER EARTHMAT LAYOUT.

बीएचईएल BHEL	EQUIPMENT EARTHING DETAILS MATERIAL & SIZES OF BELOW & ABOVE GROUND EARTHING	
COMPUTERREF.NO.	DRG. No. TB-4-420-316-009-D	SHEET No. 03

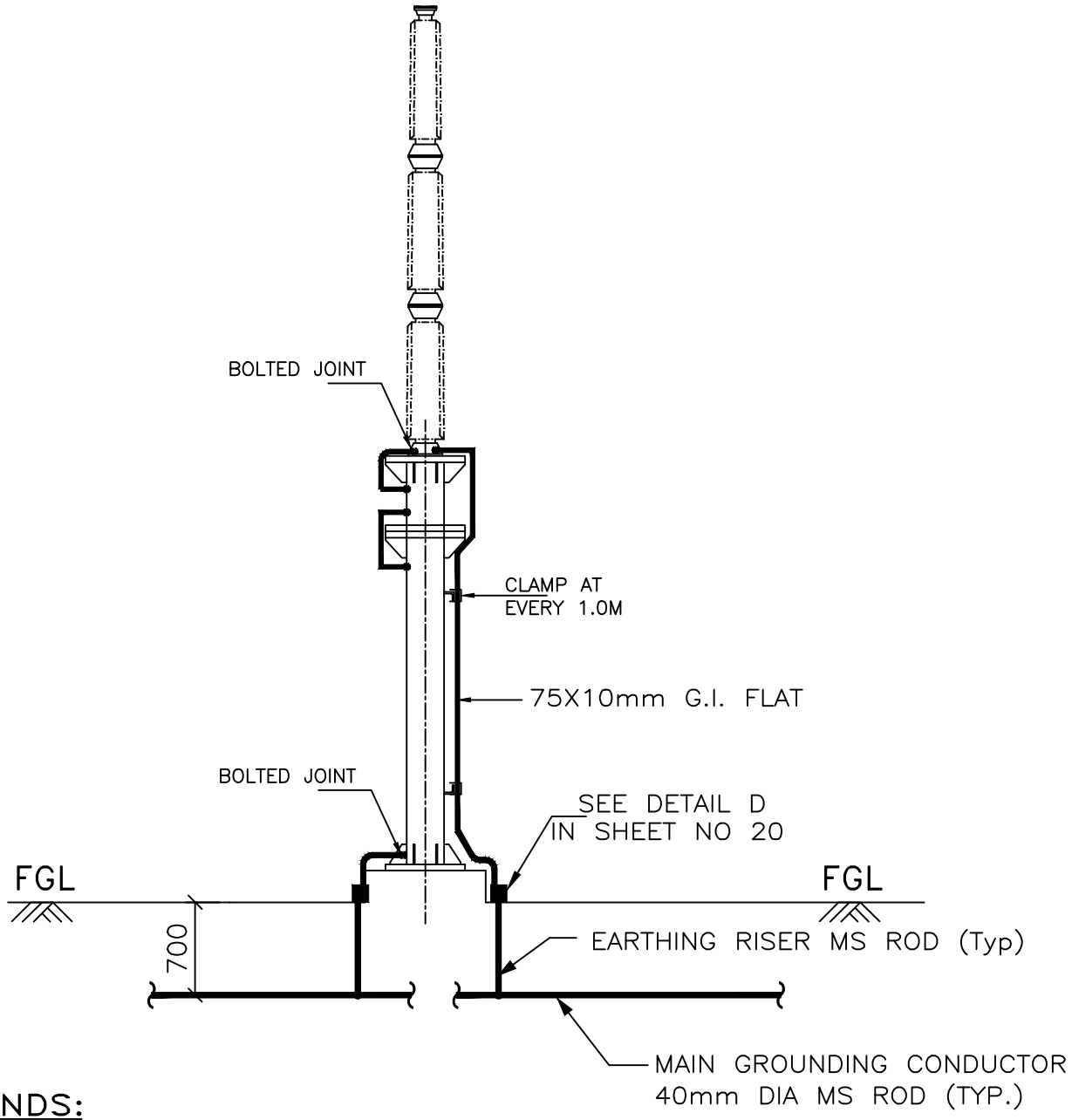

LEGENDS:

40mmø MS ROD

75x10mm GI FLAT

NOTES:

1. NO. OF RISERS= 2NOS./PHASE

बीएचईएल BHEL	EQUIPMENT EARTHING DETAILS 400kV POST INSULATOR	
COMPUTERREF.NO.	DRG. No. TB–4–369–316–009–D	SHEET No. 04

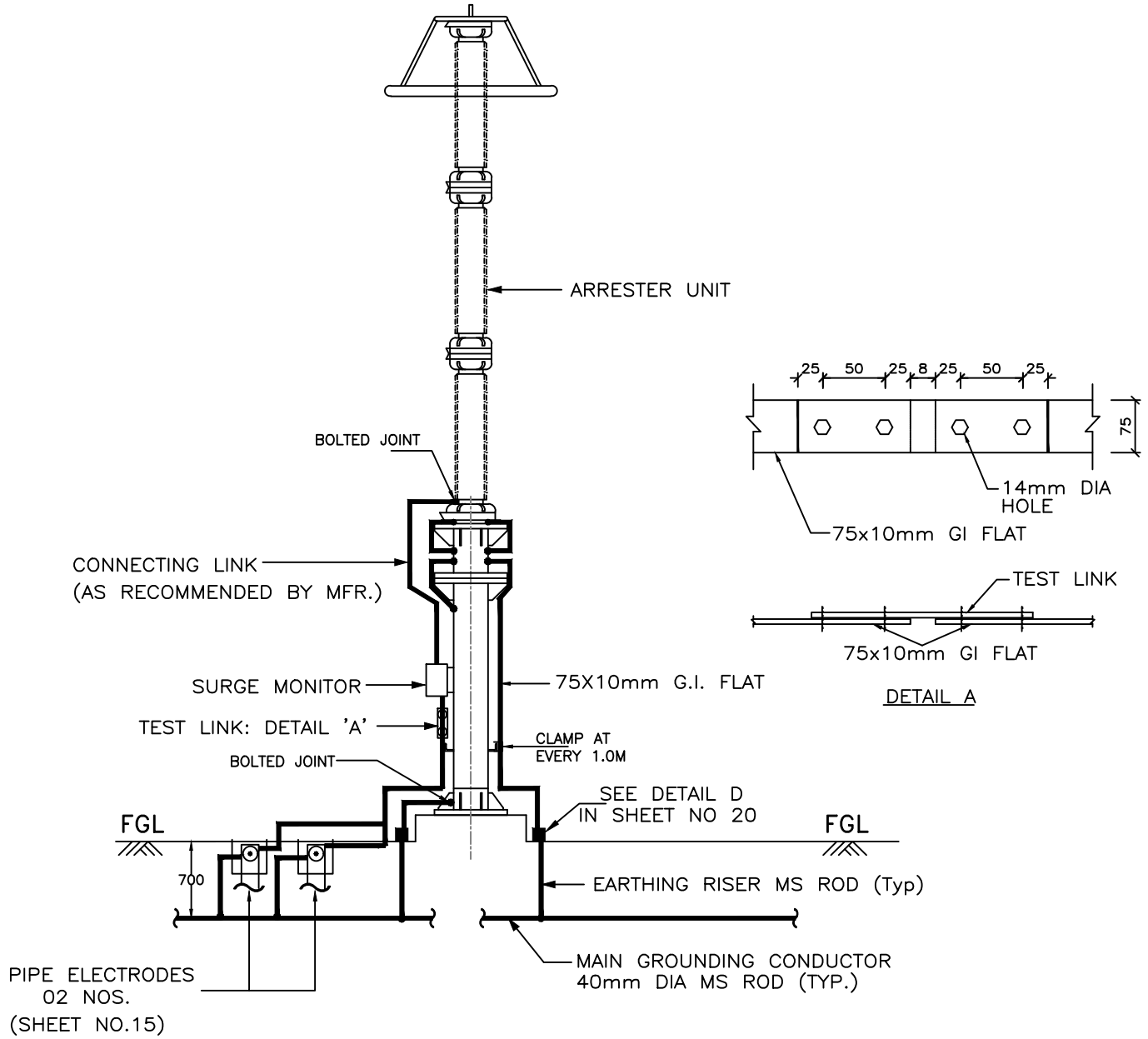

LEGENDS:

- 40mmø MS ROD
- 75x10mm GI FLAT
- CONNECTING LINK AS PER OEM

NOTES:

1. NO. OF RISERS= 3NOS./PHASE
2. NO. OF PIPE ELECTRODE IN TREATED PIT WITH TEST LINK= 2NOS./ PHASE
3. CLEAT CLAMP SHALL BE PROVIDED AT 1m INTERVAL.
4. MINIMUM DISTANCE OF 5000MM SHALL BE MAINTAINED BETWEEN TWO TREATED (PIPE) ELECTRODES.
5. SURGE COUNTER EARTHING SHALL NOT PASS THROUGH ANY PIPE AND SHALL HAVE SHORTEST LENGTH.

बीएचईएल BHEL	EQUIPMENT EARTHING DETAILS 390kV & 120kV SURGE ARRESTER	
COMPUTERREF.NO.	DRG. No. TB–4–420–316–009–D	SHEET No. 05

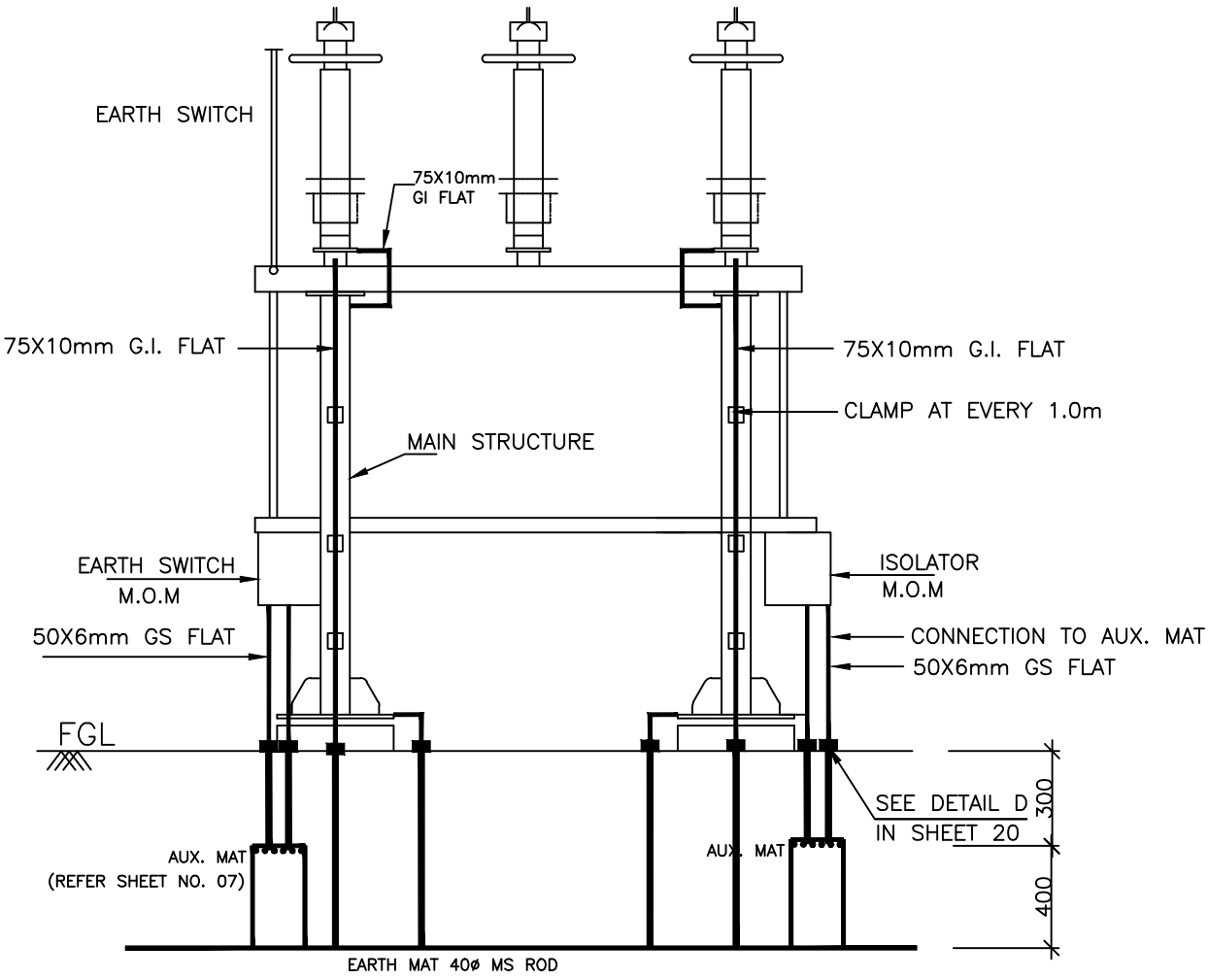

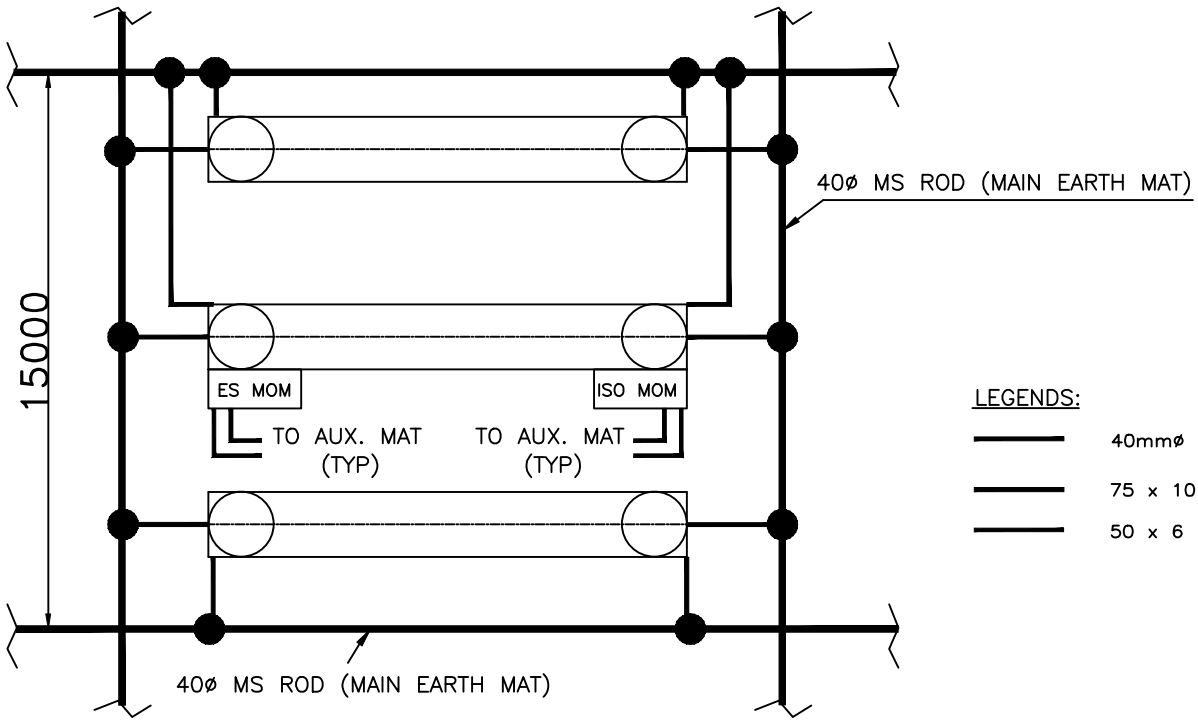

NOTES:

1. NO. OF RISER FOR EQUIPMENT = 4 Nos./PHASE (EXCLUDING RISERS FOR MOM BOXES)
2. NO. OF RISER FOR MECHANISM BOX = 2 Nos./BOX
3. NO. OF AUXILIARY MAT = 1 No./BOX

बीएचईएल BHEL	EQUIPMENT EARTHING DETAILS 400kV & 132kV DOUBLE BREAK ISOLATOR (TYPICAL) WITH ONE EARTHSWITCH(TYP.)	
COMPUTERREF.NO.	DRG. No. TB-4-420-316-009-D	SHEET No. 06

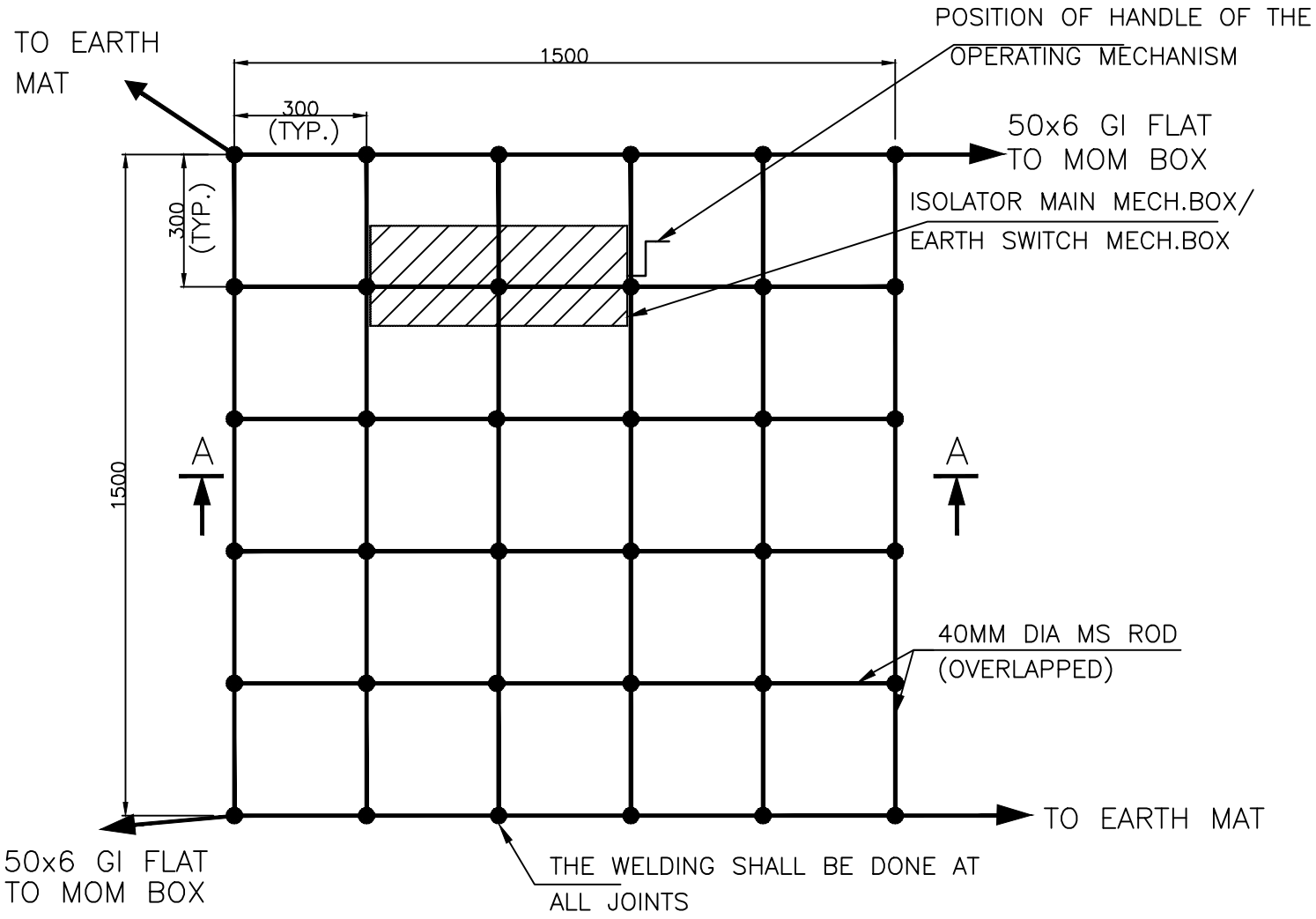

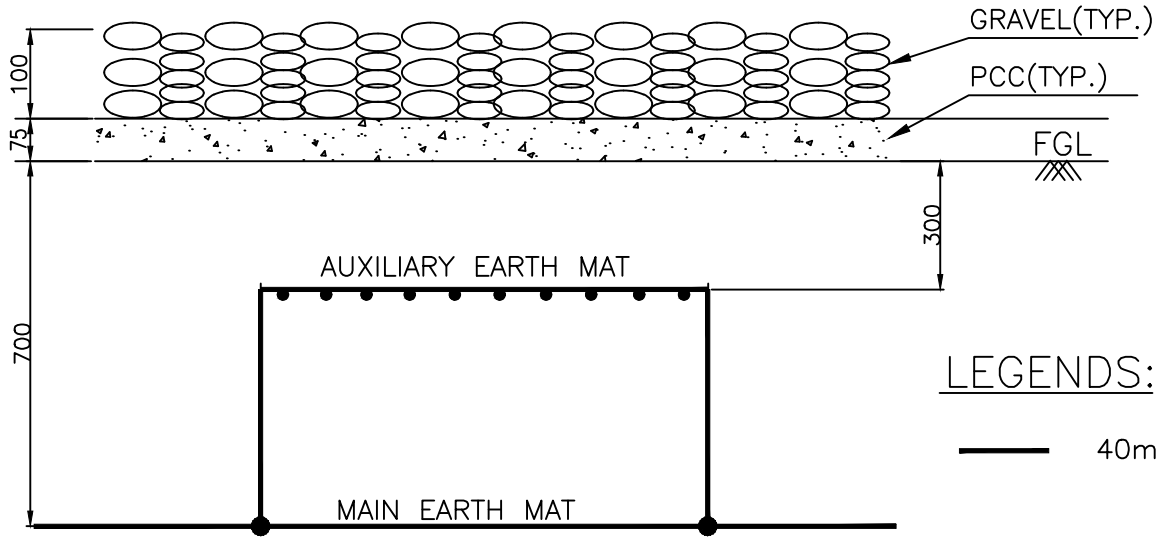

SECTION AA

LEGENDS:

40mmø MS ROD

NOTES:

1. AUX. EARTH MAT SHALL BE SO POSITIONED THAT THE FOOT OF THE OPERATOR ALWAYS LIE OVER THE AUX. EARTH MAT AREA WHILE ATTENDING / OPERATING THE MECH. BOX THE CABLE TRENCH ROUTING SHALL BE PLANNED ACCORDINGLY.

बीएचईएल BHEL	EQUIPMENT EARTHING DETAILS AUXILIARY EARTH MAT FOR ISOLATOR MAIN MECH.,E/S MECH. BOX	
COMPUTERREF.NO.	DRG. No. TB-4-420-316-009-D	SHEET No. 07

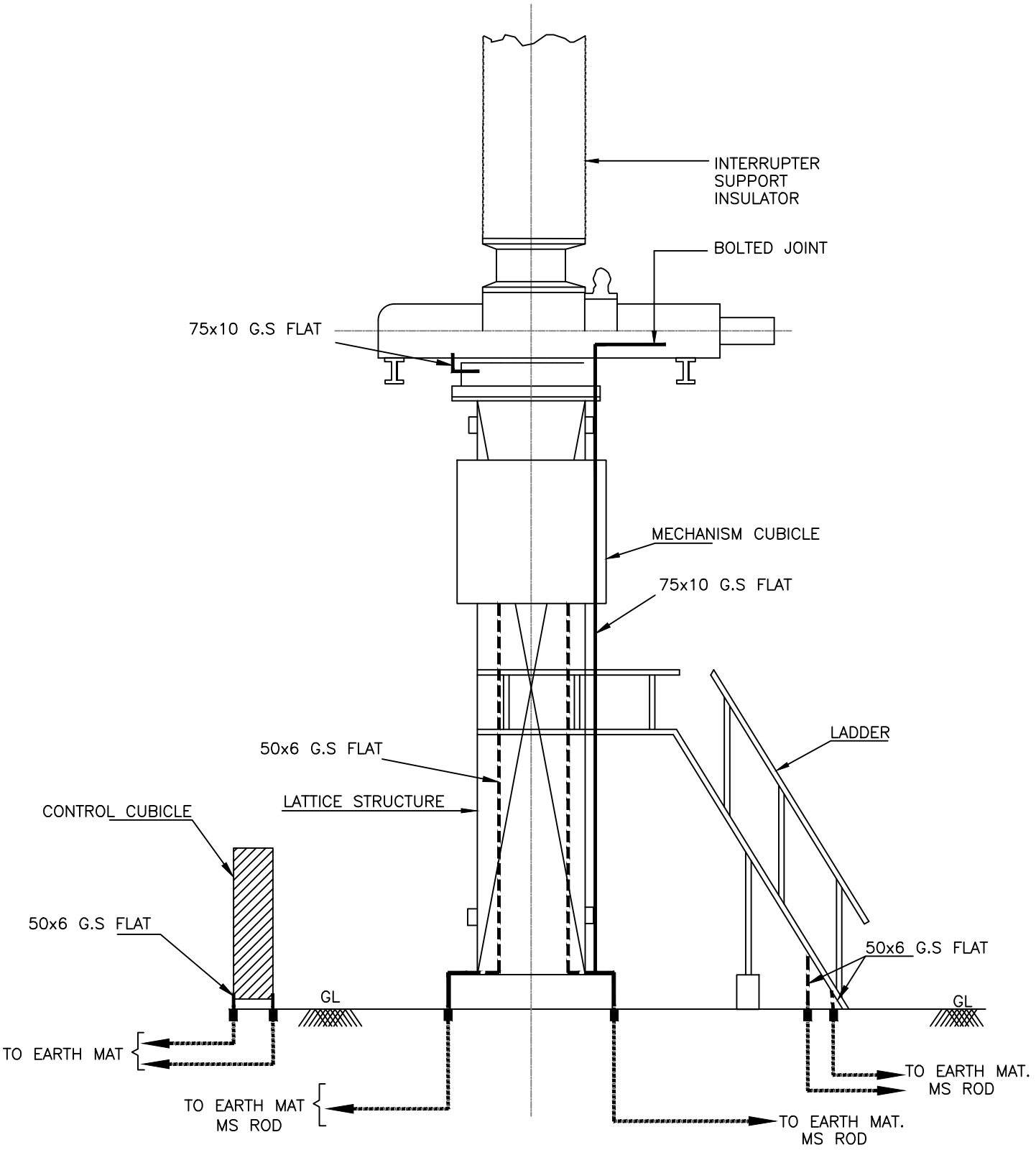

NOTES:

1. NO. OF RISERS FOR CIRCUIT BREAKER = 2 Nos./PHASE
2. NO. OF RISERS FOR MECHANISM CUBICLE = 2 Nos.
3. NO. OF RISERS FOR LADDER = 2 Nos.
4. NO. OF RISERS FOR CONTROL CUBICLE = 2 Nos.

बीएचईएल BHEL

EQUIPMENT EARTHING DETAILS

400kV CIRCUIT BREAKER

COMPUTERREF.NO.	DRG. No.	SHEET No.
	TB-4-420-316-009-D	08A

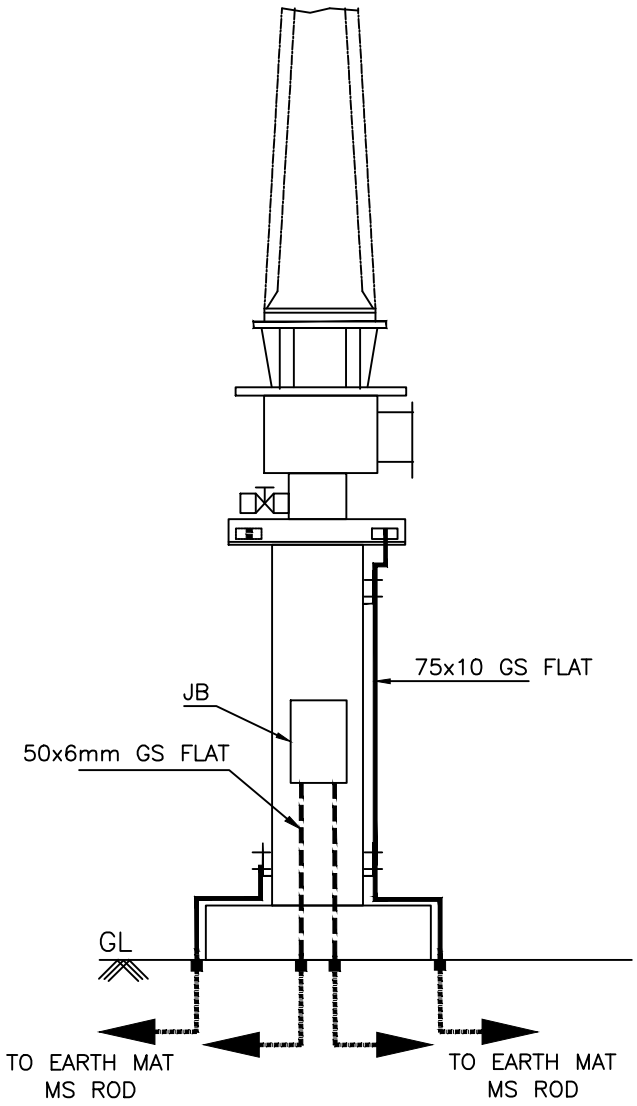

NOTES:

1. NO. OF RISER FOR CT = 2 Nos.
2. NO. OF RISER FOR CT JB = 2 Nos. (ONLY IN 'Y' PHASE)

EQUIPMENT EARTHING DETAILS

400kV/132kV CURRENT TRANSFORMER

COMPUTERREF.NO.	DRG. No.	SHEET No.
	TB-4-420-316-009-D	08B

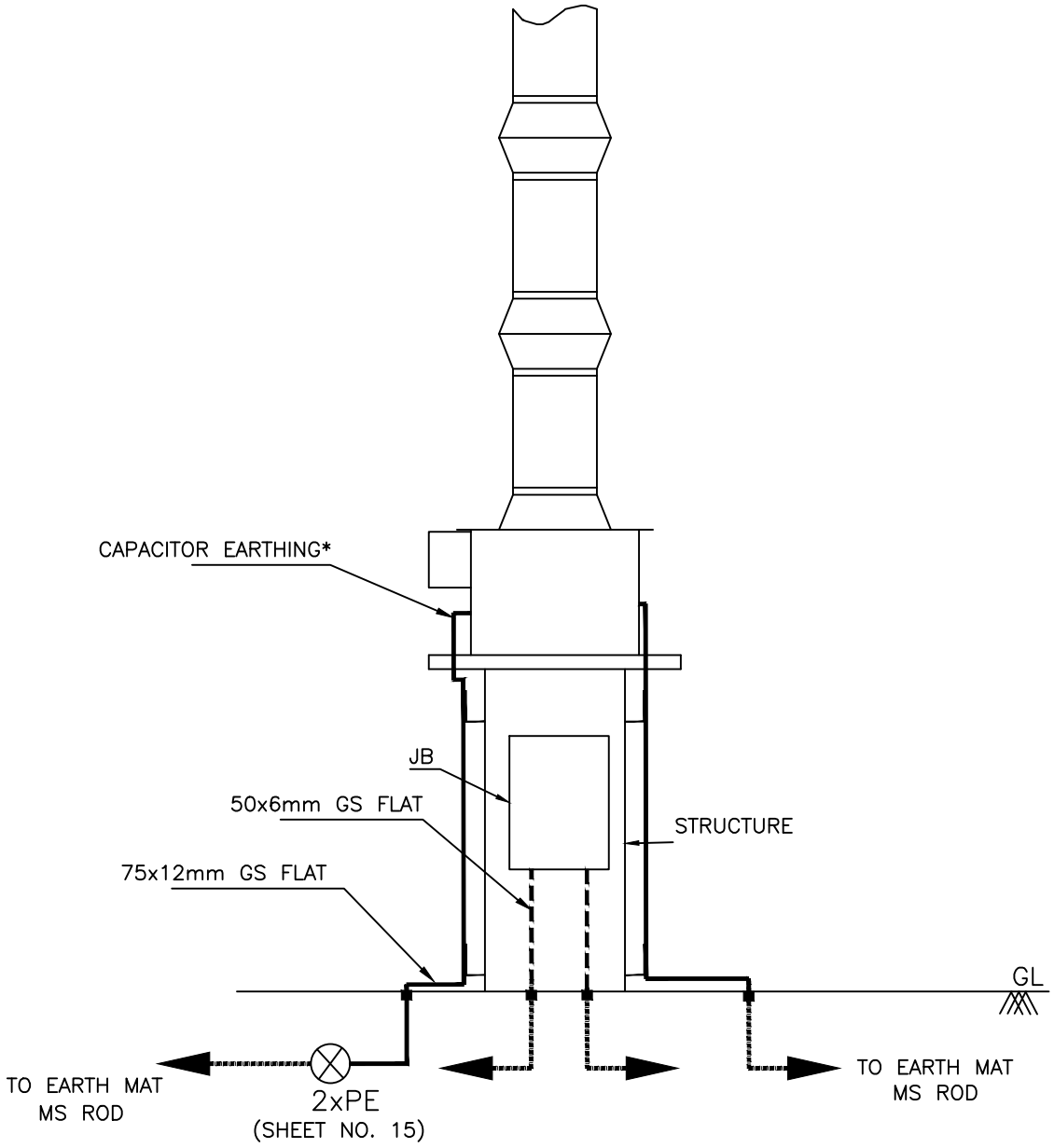

NOTE:

1. "*"– FOR LINE SIDE PROTECTION CVT CAPACITOR TO BE EARTHED THROUGH LMU.
2. FOR LINE METERING CVT, SYNCHRONISING CVT & BUS CVT CAPACITOR SHALL BE EARTHED INSIDE THE BOX
3. NO. OF RISER FOR CVT = 1 Nos.
4. NO. OF RISER FOR CVT JB = 2 Nos. (ONLY IN 'Y' PHASE)
5. NO. OF RISER FOR ROD ELECTRODE = 1 Nos. (WHEREVER APPLICABLE)

बीएचईएल BHEL

EQUIPMENT EARTHING DETAILS

400kV/132kV CURRENT TRANSFORMER

COMPUTERREF.NO.	DRG. No.	SHEET No.
	TB–4–420–316–009–D	08C

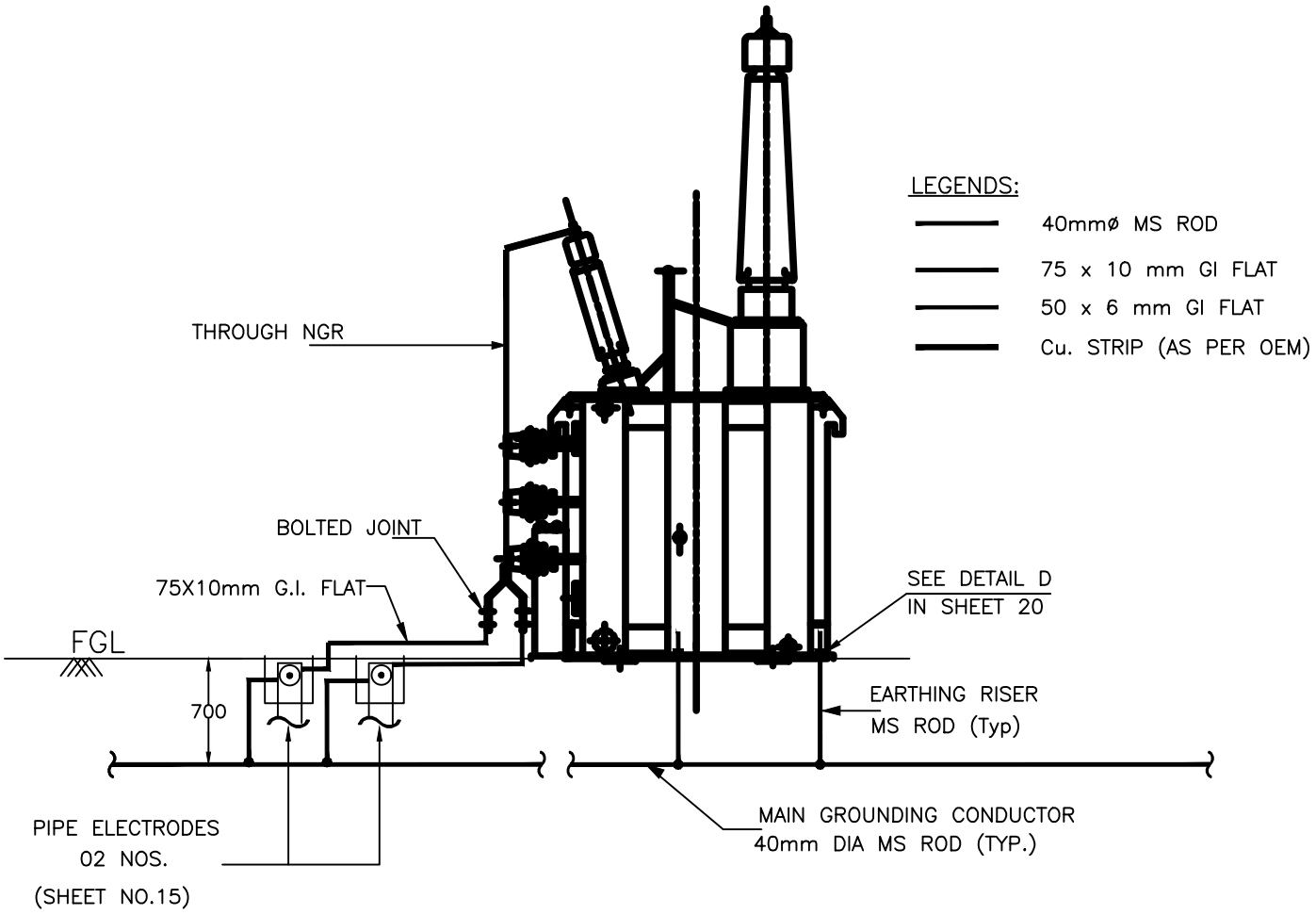

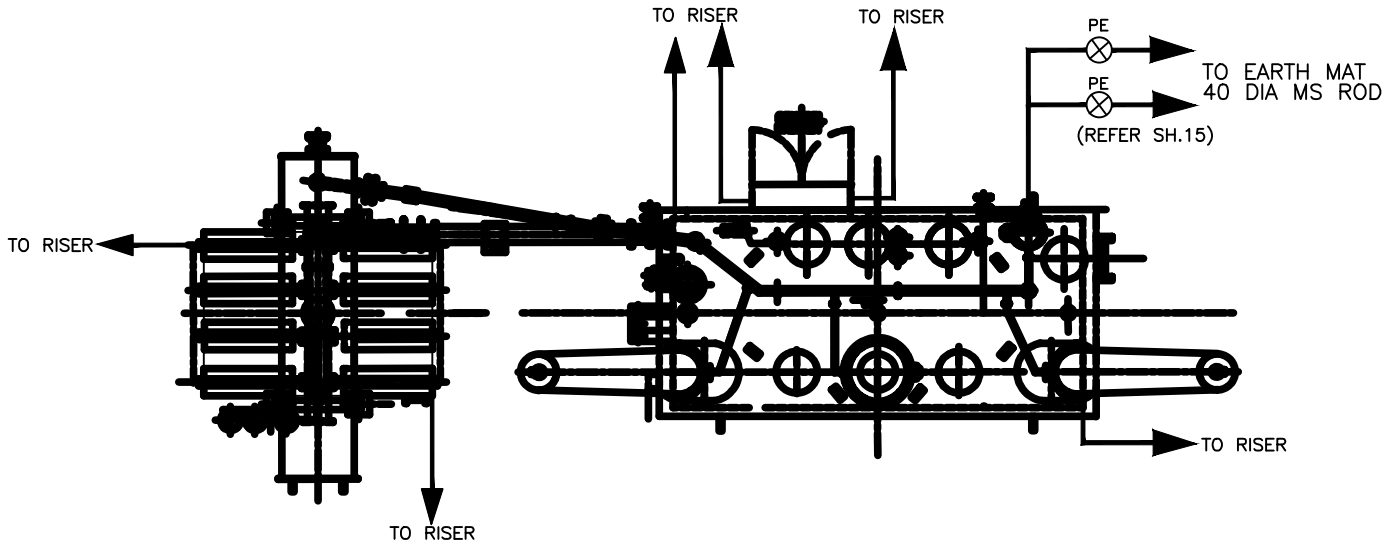

NOTES:

MINIMUM DISTANCE OF 5000MM SHALL BE MAINTAINED BETWEEN TWO TREATED (PIPE) ELECTRODES.
NO. OF PIPE EARTH ELECTRODE WITH TREATED PIT = 2 NOS.
NO.OF RISERS = 8 NOS. FOR EARTHING OF FOLLOWING PARTS OF 400KV BUS REACTOR
(TWO EARTHING STRIPS CAN BE CONNECTED TO ONE RISER)

MAIN TANK	– 2 Nos. (75X10 G.I FLAT)
RADIATOR SUPPORT	– 2 Nos. (75X10 G.I FLAT
CONTROL CABINET/MB	– 2 Nos. (50x6 GS FLAT)
NEUTRAL EARTHING	– 2 Nos. (75X10 GI FLAT THROUGH PIPE ELECTRODE)

BHEL

EQUIPMENT EARTHING DETAILS
REACTOR

COMPUTERREF.NO.	DRG. No.	SHEET No.
	TB–4–420–316–009–D	09

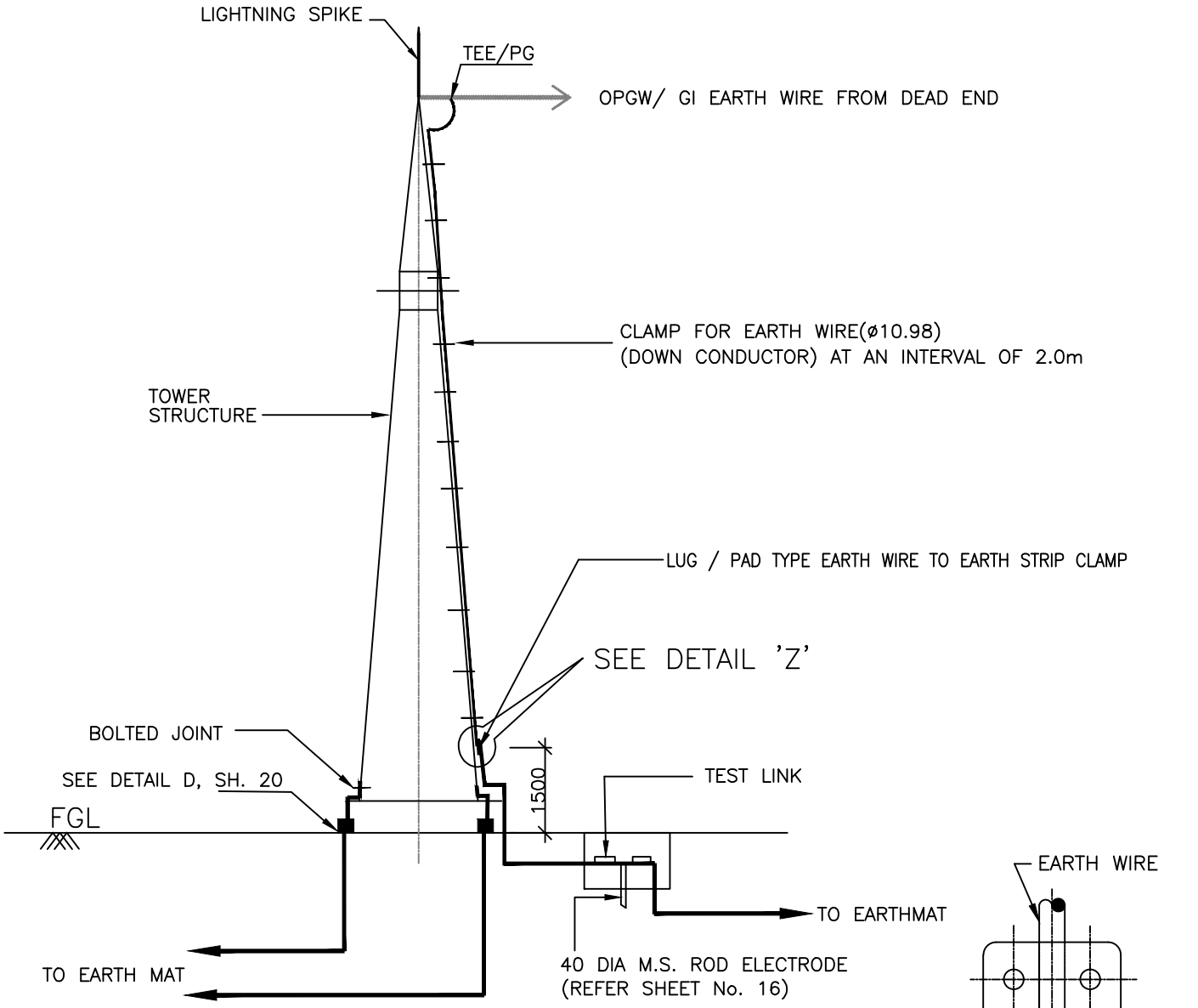

LEGENDS:

- 40mmø MS ROD
- 75 x 10 mm GI FLAT
- 7/9 SWG (10.98mm DIA) EARTH WIRE DOWNCONDUCTOR

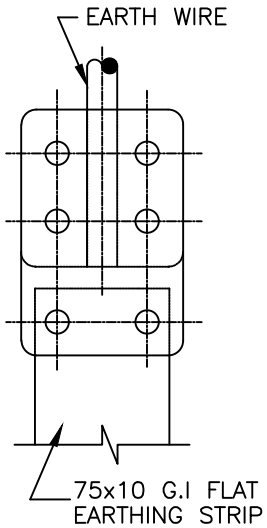

DETAIL – Z

NOTES:

1 NO. OF ROD ELECTRODE : 1 NO. PER TOWER WITH DOWN CONDUCTOR.

2. NO. OF RISERS = 2 NOS.

बीएचईएल BHEL	EQUIPMENT EARTHING DETAILS TOWER WITH PEAK	
COMPUTERREF.NO.	DRG. No. TB–4–420–316–009–D	SHEET No. 10

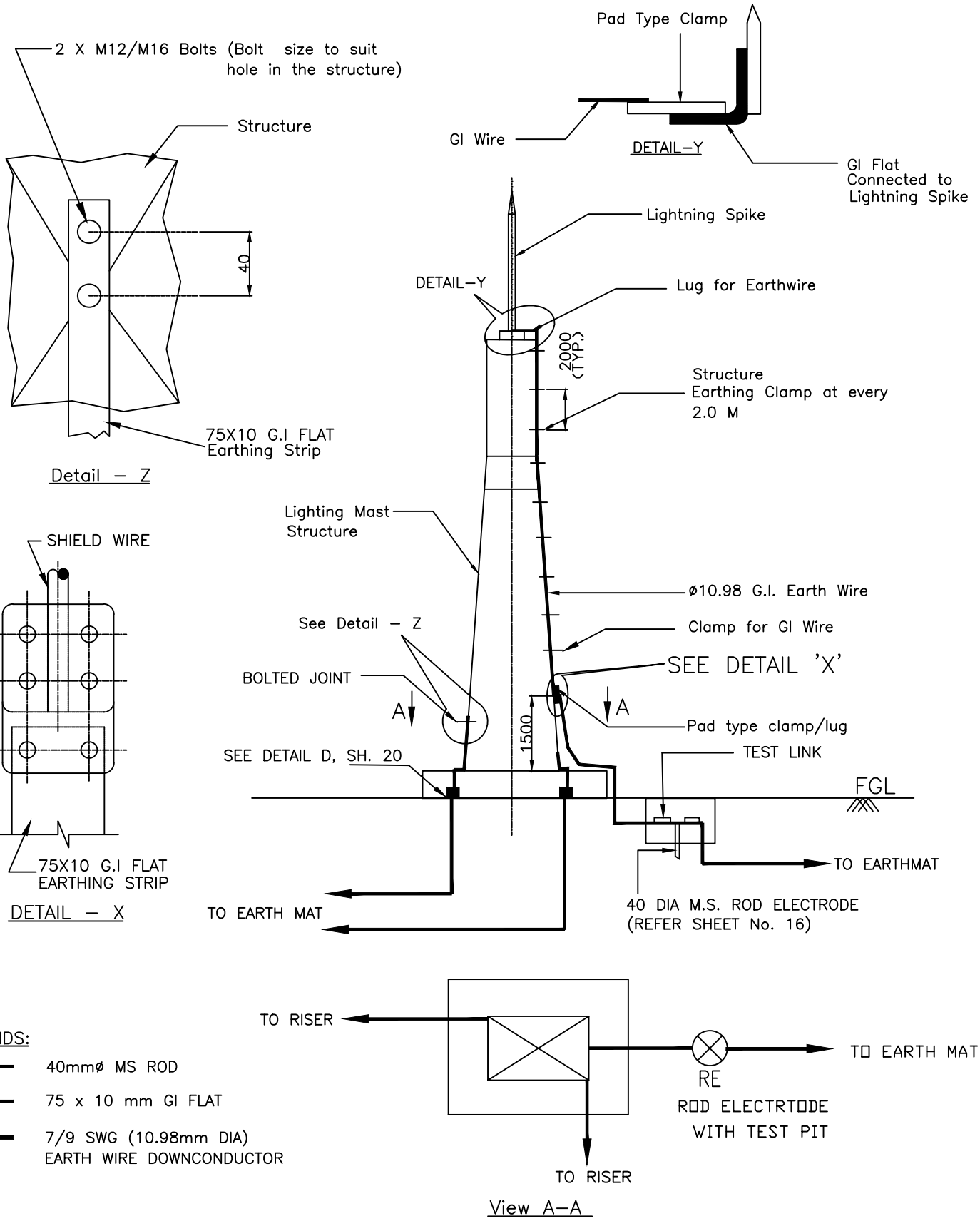

NOTES:

1. NO. OF ROD ELECTRODE WITH TEST PIT : 1 NO.
2. NO. OF RISERS = 2 NOS.
3. THE DOWN CONDUCTORS (E/WIRE) SHALL BE CONNECTED TO EARTH ELECTRODE.

बीएचईएल BHEL	EQUIPMENT EARTHING DETAILS LIGHTENING MAST (LM)	
COMPUTERREF.NO.	DRG. No. TB–4–420–316–009–D	SHEET No. 11

FENCE GATE

FENCE GROUNDING

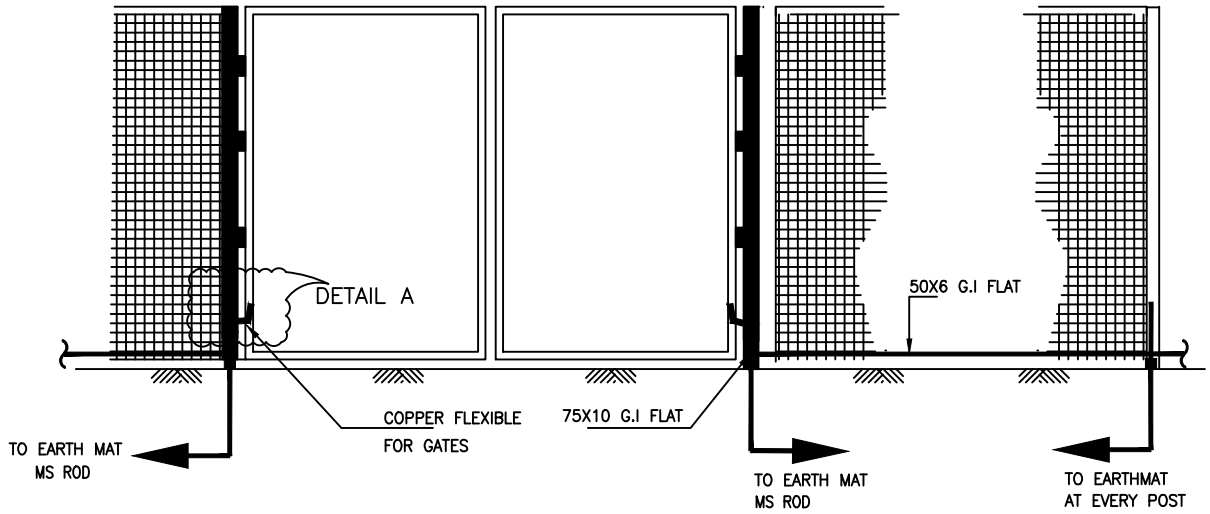

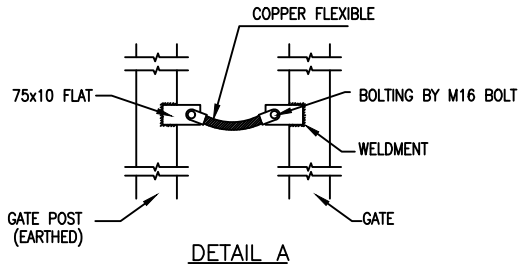

DETAIL A

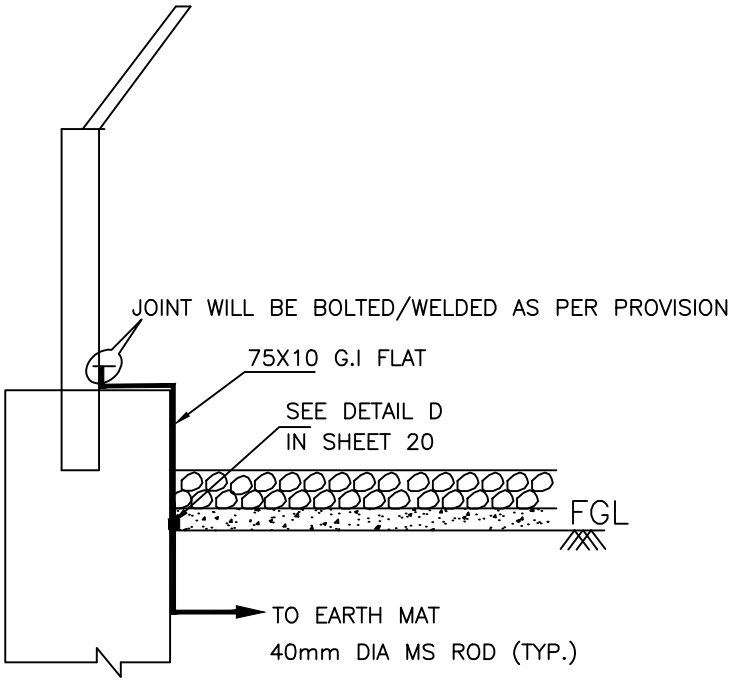

LEGENDS:

- 40mmø MS ROD
- 75 x 10 mm GI FLAT
- 50 x 6 mm GI FLAT
- BRAIDED Cu. CONDUCTOR (FOR EARTHING OF GATES)

NOTES:

1. EVERY POST OF FENCE & GATES SHALL BE CONNECTED TO EARTHING GRID BY 75X10 MM GI FLAT.
2. A CONTINUOUS EARTH STRIP OF SIZE 50X6mm SHALL RUN ALL THROUGH THE FENCE.
3. EARTHING CONDUCTOR SHALL BE BURIED 2000mm OUTSIDE THE SWITCHYARD FENCE.

बीएचईएल BHEL	EQUIPMENT EARTHING DETAILS GATE/FENCE POST	
COMPUTERREF.NO.	DRG. No. TB–4–420–316–009–D	SHEET No. 12

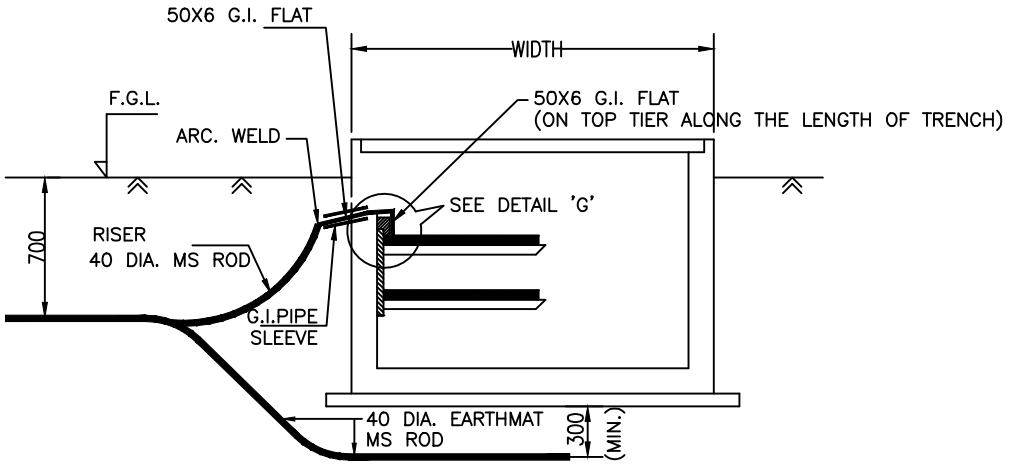

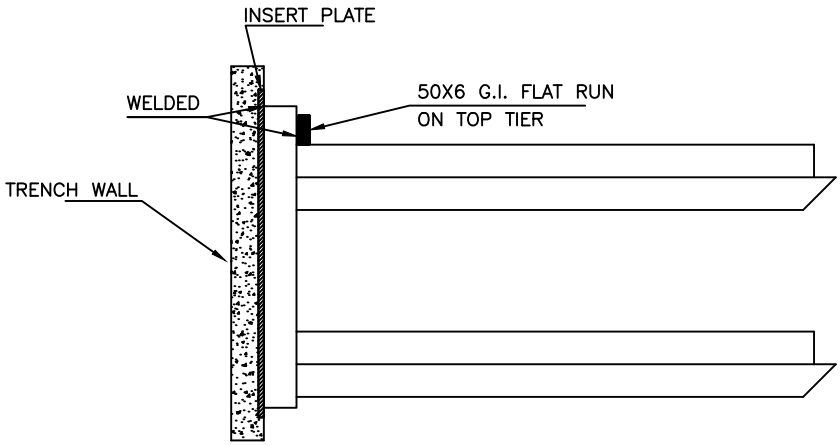

DETAIL 'G'

DETAIL FOR CONNECTING GI FLAT RUNNING
ON TOP TIER TRENCH TO EMBEDDED PLATE.

LEGENDS:

40mmø MS ROD

50x6mm GI FLAT

NOTES:

1. RISERS SHALL BE PROVIDED AT AN INTERVAL OF 20M ALONG THE LENGTH OF TRENCH.
2. THE EARTH STRIP (50x6mm G.I. FLAT) SHALL BE WELDED/CLEATED TO TOP RACK ALONG THE TRENCH RUN AT EVERY 1.5M.
3. WHERE THE CABLE RACKS ARE PROVIDED ON BOTH SIDES OF THE TRENCH, BOTH SIDES SHALL BE EARTHED AS PER ABOVE.
4. CABLE & CABLE TRAY EARTHING SHALL BE DONE AS PER SPECIFICATION.

बीएचईएल BHEL

EQUIPMENT EARTHING DETAILS
CABLE TRENCH

COMPUTERREF.NO.	DRG. No.	SHEET No.
	TB-4-420-316-009-D	13

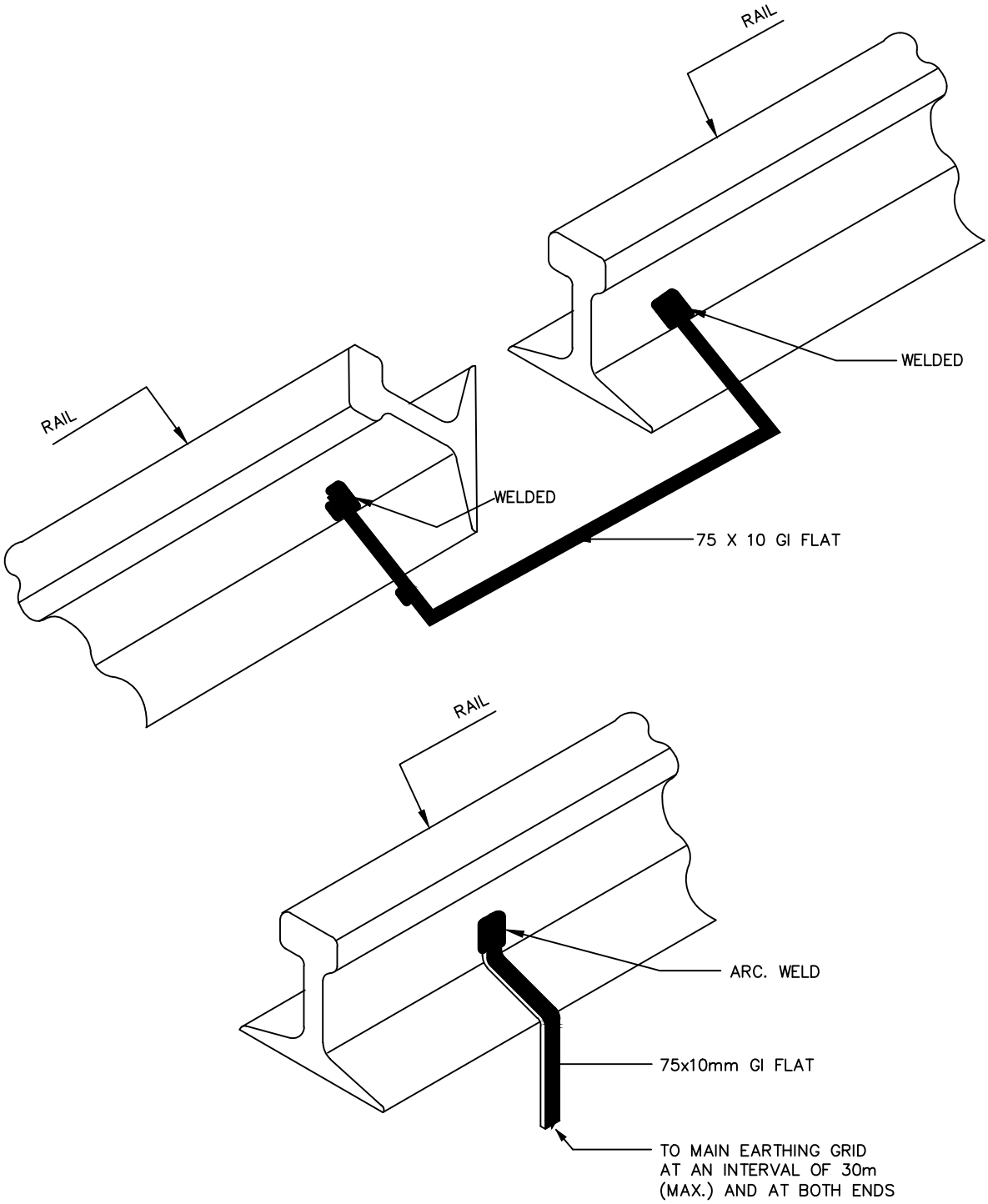

LEGENDS:

75x10mm GI FLAT

NOTES:

1. RAILWAY TRACKS WITHIN SWITCHYARD AREA SHALL BE EARTHED AT A SPACING OF NOT MORE THAN 30m AND ALSO AT BOTH ENDS.

बीएचईएल BHEL	EQUIPMENT EARTHING DETAILS RAIL BONDING	
COMPUTERREF.NO.	DRG. No. TB–4–420–316–009–D	SHEET No. 14

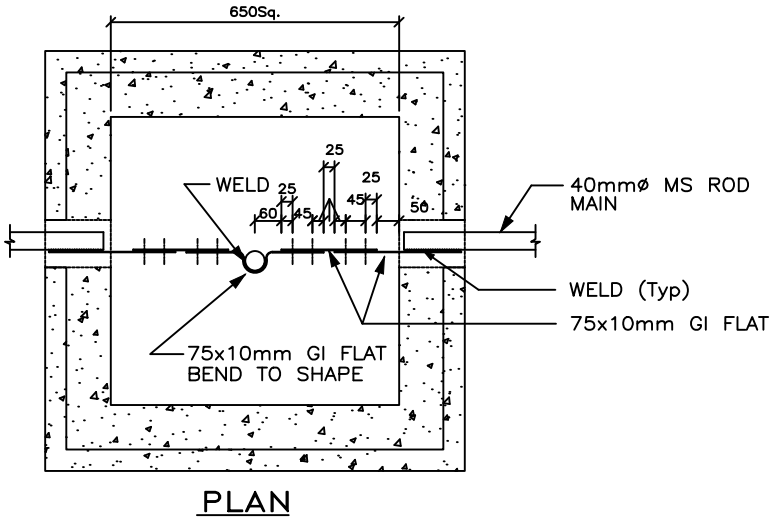

PLAN

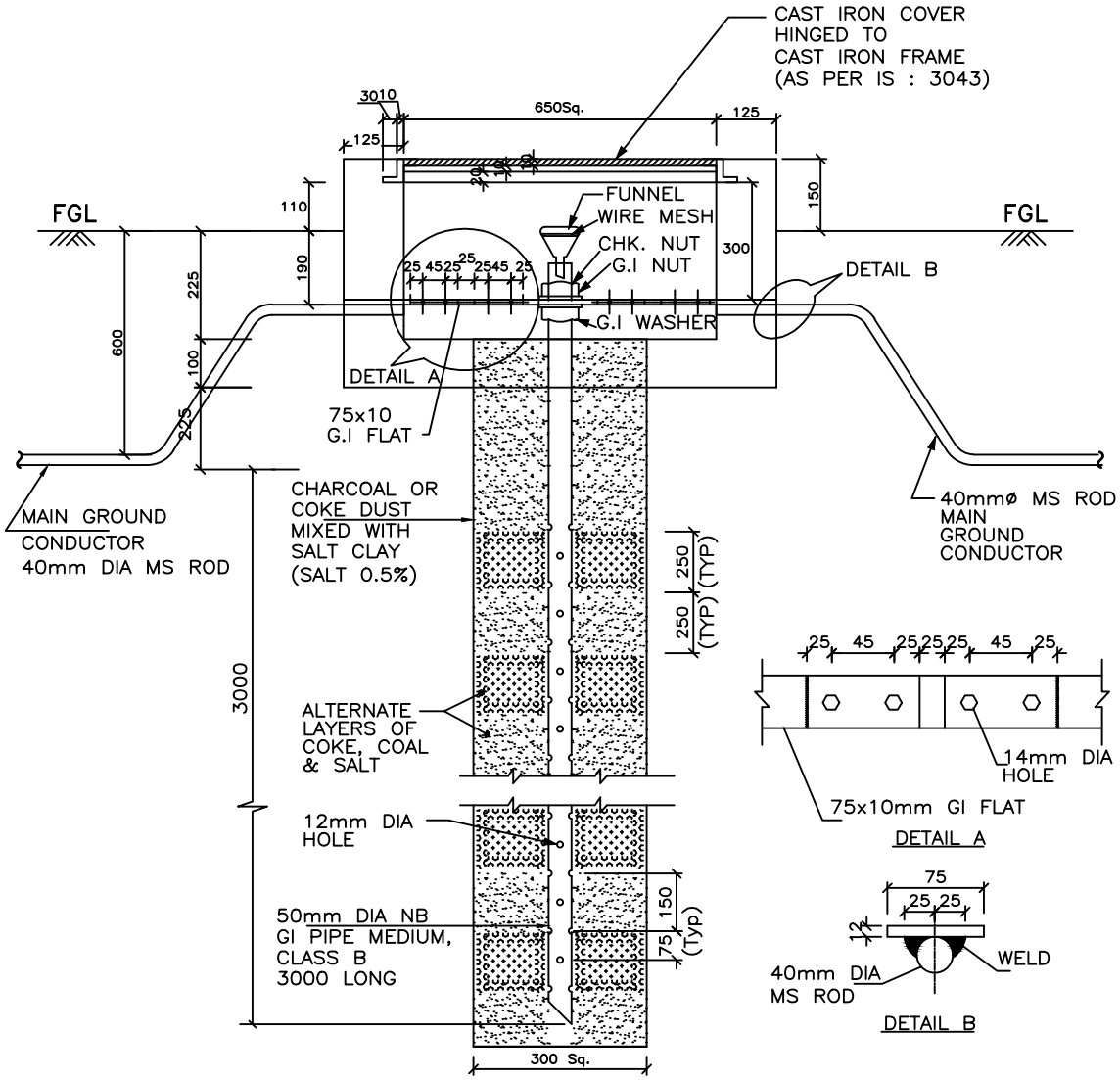

NOTES:

1. SUPPLY OF FIXING BOLTS NUTS & WASHERS FOR GI FLAT EARTHING CONDUCTOR IS ALSO FORMS PART OF THE SCOPE.
2. TO BE USED FOR TRANSFORMER /REACTOR NEUTRAL EARTHING AND FOR SURGE ARRESTER.

बीएचईएल BHEL	EQUIPMENT EARTHING DETAILS PIPE EARTH ELECTRODE WITH TREATED PIT	
COMPUTERREF.NO.	DRG. No. TB–4–420–316–009–D	SHEET No. 15

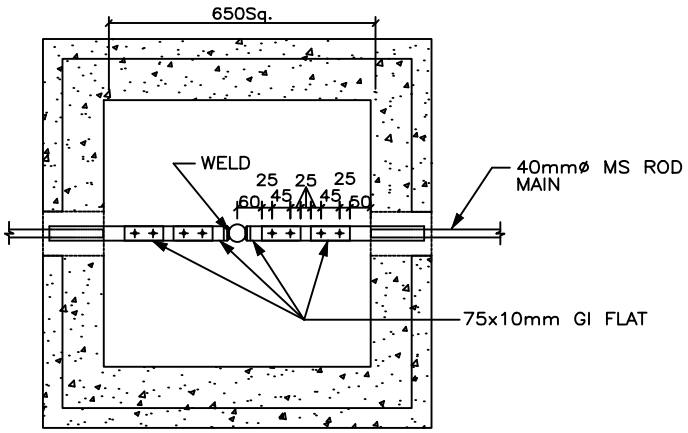

PLAN

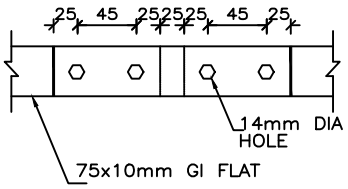

DETAIL A

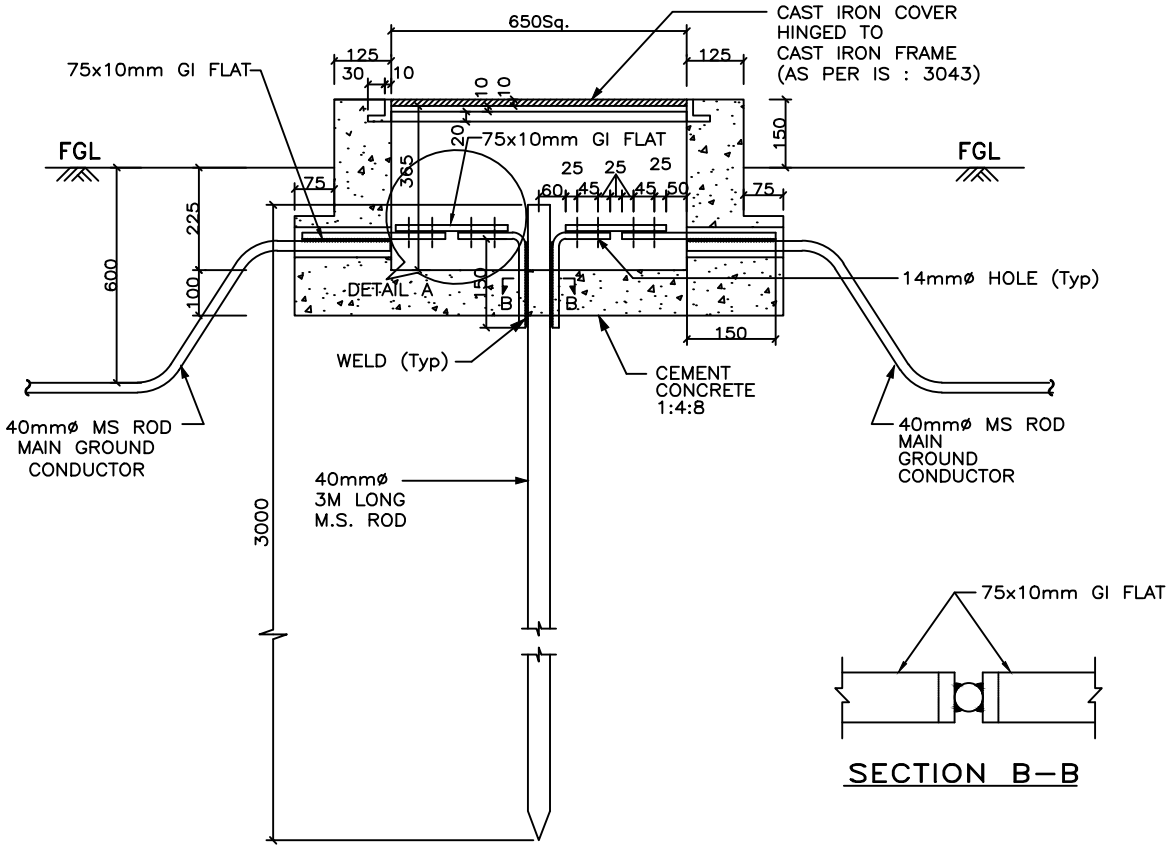

ELEVATION

SECTION B–B

NOTES:–

1. SUPPLY OF FIXING BOLTS NUTS & WASHERS FOR GI FLAT EARTHING CONDUCTOR IS ALSO FORMS PART OF THE SCOPE.
2. TO BE USED FOR CONNECTING DOWN CONDUCTOR OF LIGHTINING MASTS, TOWERS WITH PEAK AND BUILDINGS.

बीएचईएल BHEL	EQUIPMENT EARTHING DETAILS ROD EARTH ELECTRODE WITH TEST PIT	
COMPUTERREF.NO.	DRG. No. TB–4–420–316–009–D	SHEET No. 16

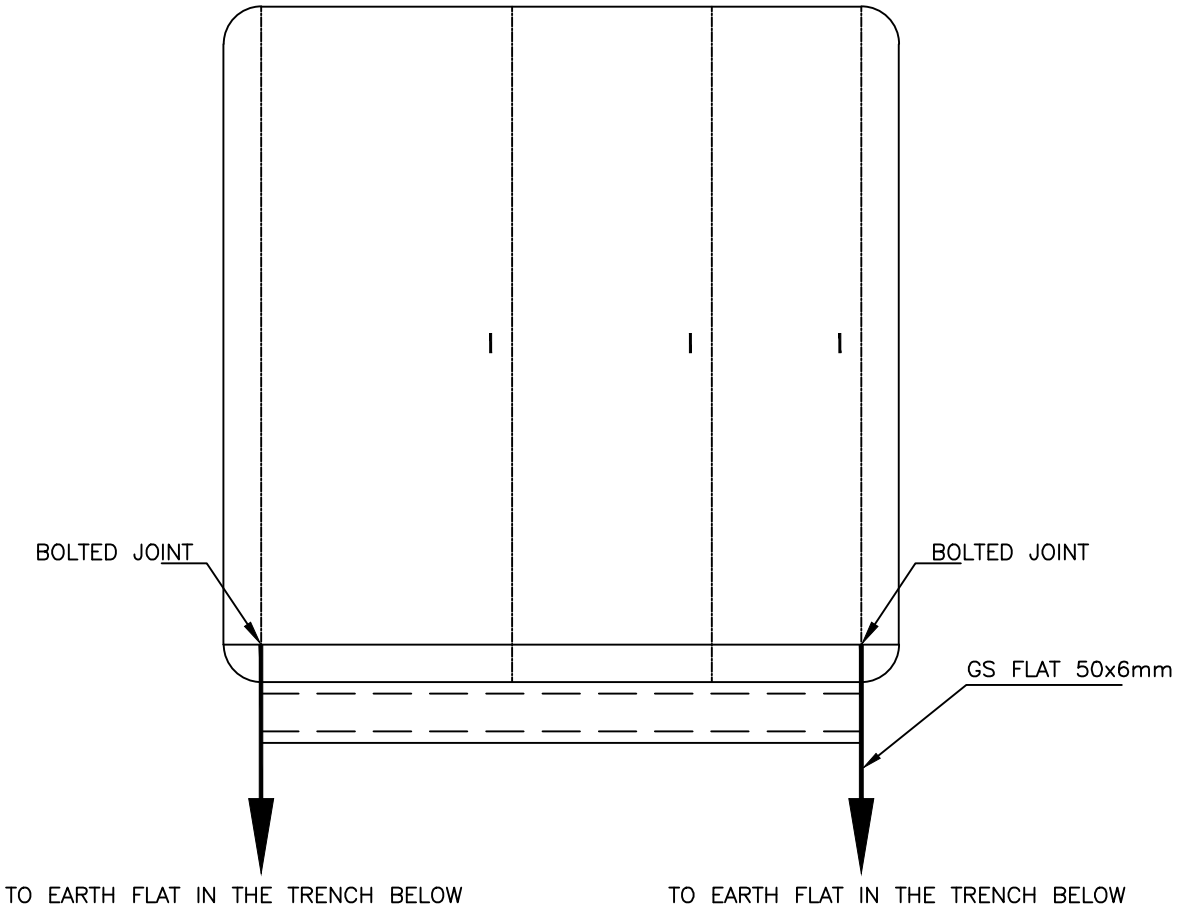

LEGENDS:

—————— 50x6mm GI FLAT

NOTES:

1. ALL PANELS/ BOARDS/ KIOSKS/ MBs SHALL BE EARTHED AT TWO LOCATIONS USING 50x6mm GI FLAT, WHICH IN TURN SHALL BE CONNECTED TO MAIN EARTH MAT THROUGH EARTH CONDUCTORS IN TRENCHES OR THROUGH RISERS.

बीएचईएल BHEL	EQUIPMENT EARTHING DETAILS CONTROL AND RELAY PANELS/BATTERY CHARGER/AC DC BOARDS/MLDB	
COMPUTERREF.NO.	DRG. No. TB-4-420-316-009-D	SHEET No. 17

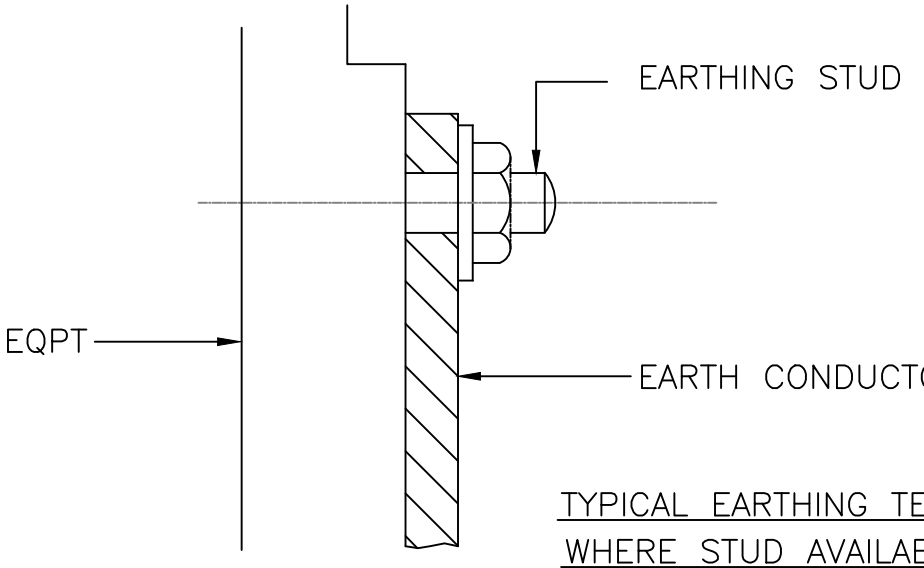

TYPICAL EARTHING TERMINAL JOINT WHERE STUD AVAILABLE

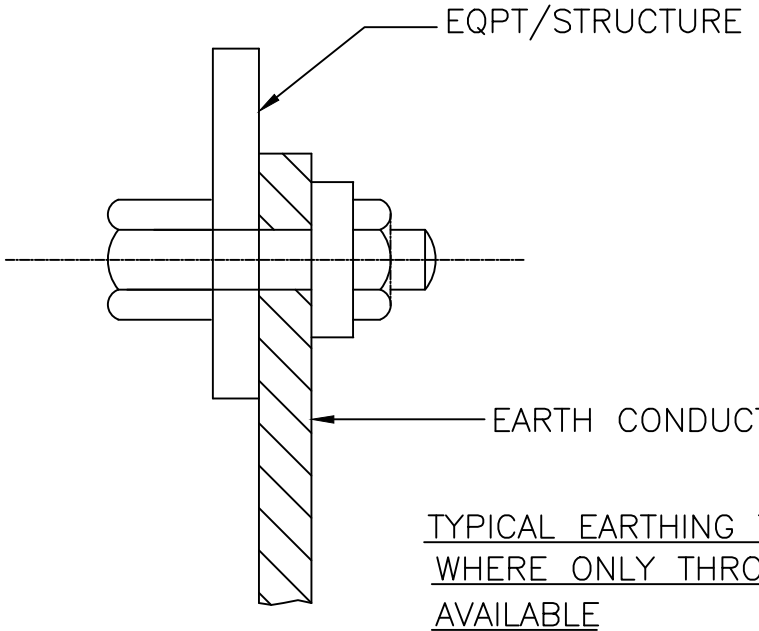

TYPICAL EARTHING TERMINAL JOINT WHERE ONLY THROUGH HOLE IS AVAILABLE

NOTE

1. THIS IS GENERAL TYPICAL BOLTING ARRANGEMENT APPLICABLE TO ALL PANELS, EQUIPMENT ETC. WHERE BOLTING ARRANGEMENT IS PROVIDED.
2. IN CASE EARTHING TERMINAL COMPRISES ONLY A TAPPED HOLE SUITABLE BOLT/ SCREW WITH WASHER MAY BE USED FOR EARTHING CONDUCTOR TERMINATION

बीएचईएल BHEL	EQUIPMENT EARTHING DETAILS TYPICAL ARRANGEMENT OF BOLTED JOINTS	
COMPUTERREF.NO.	DRG. No. TB-4-420-316-009-D	SHEET No. 18

STRIP TO STRIP (75x10/50X6 GI FLAT)

1. STRAIGHT LAP JOINT/RISER

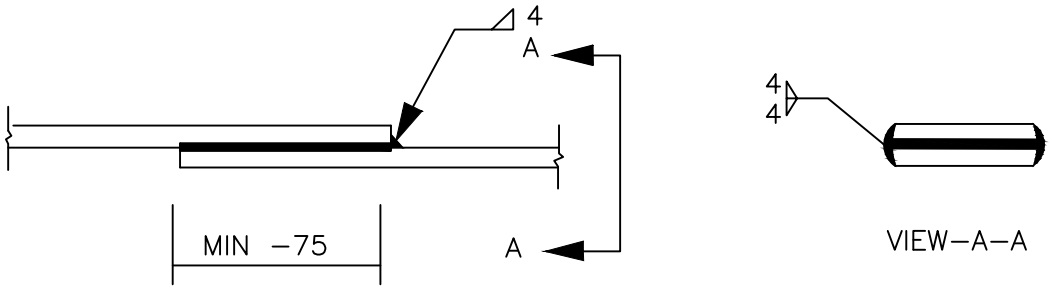

2. CROSS LAP JOINT

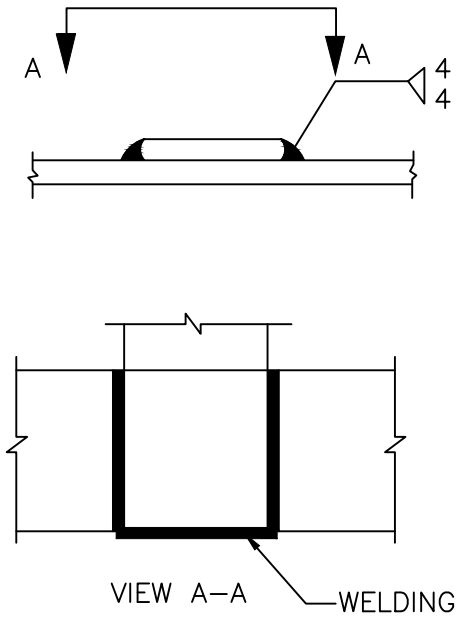

बीएचईएल BHEL	EQUIPMENT EARTHING DETAILS WELDING DETAILS	
COMPUTERREF.NO.	DRG. No. TB–4–420–316–009–D	SHEET No. 19

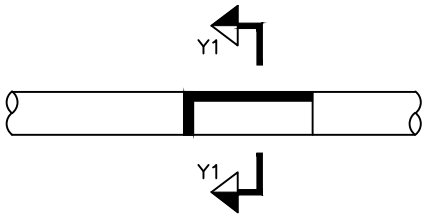

ELEVATION

(CONDUCTOR IN HORIZONTAL PLANE)

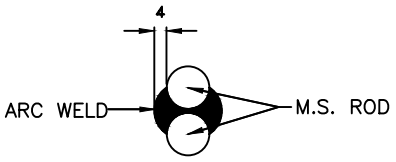

SECTION Y2-Y2

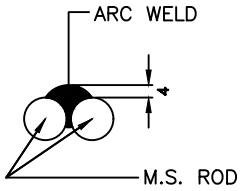

SECTION Y1-Y1

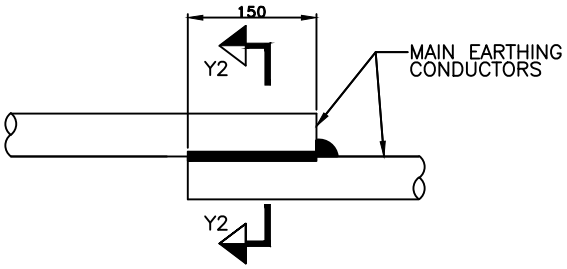

ELEVATION

(CONDUCTOR IN VERTICAL PLANE)

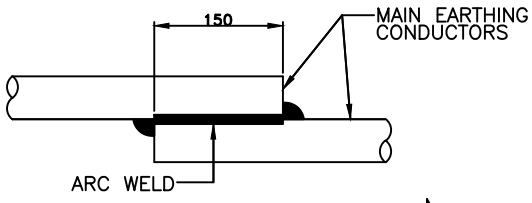

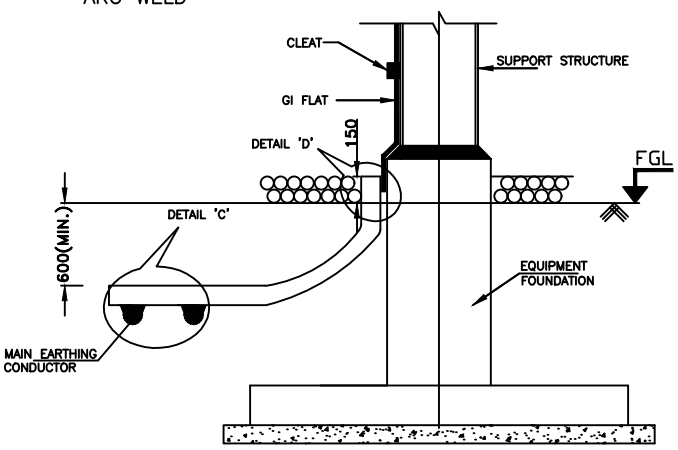

TYPICAL DETAILS OF RISER

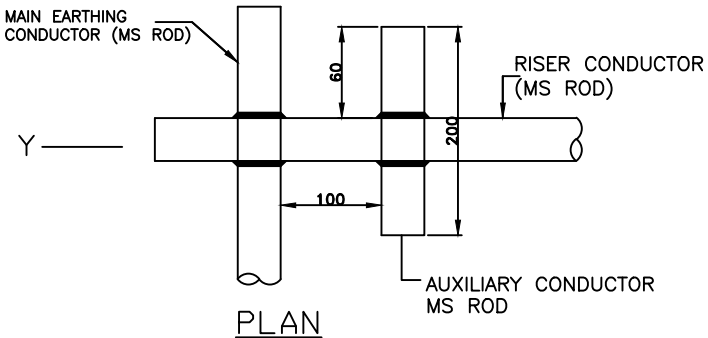

PLAN

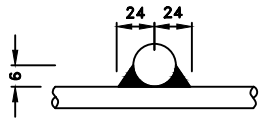

VIEW-Y

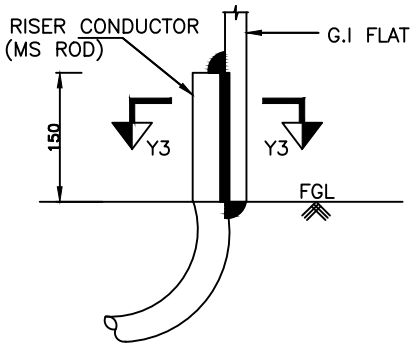

ELEVATION
DETAIL-D

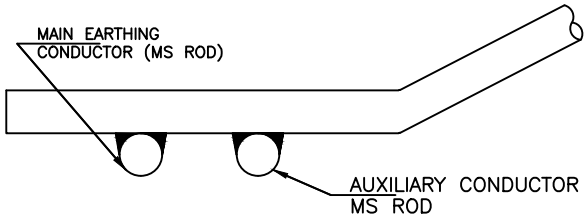

ELEVATION
DETAIL-C

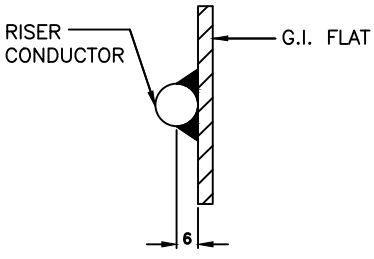

SECTION Y3-Y3

TYPICAL OVERLAPPING JOINT OF TWO CONDUCTORS

बीएचईएल BHEL	EQUIPMENT EARTHING DETAILS WELDING DETAILS	
COMPUTERREF.NO.	DRG. No. TB-4-420-316-009-D	SHEET No. 20

TRANSMISSION BUSINESS GROUP
(Subcontracts Management)

Doc. No. TBSM/Std-Spec/Open-Str/02 Rev. 01

SPECIFICATION FOR OPEN STORE FOR SWITCHYARD

1. The area of the open store shall be as indicated in the BOQ.

2. The area identified for the open store shall be enclosed with barbed wire fencing-1.8 M high above ground level with 8 strands of horizontal and two diagonal barbed wires (between 2 posts). The posts shall be of medium M.S tubes of 50mm dia or angle 50x50x6 and shall be spaced 3.0m cente to centre. Inclined post supports shall be provided at all corners and at every 10th post. All posts shall embedded at least 0.4m in PCC 1:2:4 block of size 0.40x0.40x0.6m. 75mm thick PCC 1:4:8 shall be provided below concrete block.

3. One 5m wide X 1.8m high (2 leaf) gate suitable for truck/ trailer entry and one 1m wide X 1.8m high wicket gate suitable for personnel entry shall be provided. The gate shall be of pipe framework (having suitable stiffness) with welded mesh suitably fixed on it.. The gate shall be provided with suitable locking arrangement.

4. The area of the open store shall be raised minimum150mm above the surrounding ground level with compacted earth. Over this, flat brick soling or some other suitable alternative material of minimum thickness 75mm shall be provided.

5. One central road 3.75 mts. wide located centrally along the long axis of the stores shall be constructed with 150mm compacted thickness boulder soling interstices filled with moorum and adequately rolled and compacted. The top of the road shall be 150mm above the yard soling level. The total area of the road shall be maximum 15% of the area of the open store.

6. One security cabin of size 2.0m x 2.0m shall be provided inside the fence adjacent to the gate. Four nos. of sand and water buckets on suitable stand shall be provided adjacent to the cabin.

7. The area shall be adequately illuminated with min. 4 nos. of halogen lamps at the four corners of the stores and 1 tube light in the security cabin. The scope includes cabling from the main switch in the covered stores and interconnected cabling. Where the scope includes only the open store, the main switch shall be provided inside the security cabin

8. All materials shall conform to IS and shall be procured from approved sources & reputed manufacturer(s). The execution of work shall be as per latest CPWD/IS specifications & directions of Engineer-in-Charge.

Annexure-1

INTEGRITY PACT

Between

Bharat Heavy Electricals Ltd. (BHEL), a company registered under the Companies Act 1956 and having its registered office at "BHEL House", Siri Fort, New Delhi - 110049 (India) hereinafter referred to as "The Principal", which expression unless repugnant to the context or meaning hereof shall include its successors or assigns of the ONE PART

and

_____, (description of the party along with address), hereinafter referred to as "The Bidder/ Contractor" which expression unless repugnant to the context or meaning hereof shall include its successors or assigns of the OTHER PART

Preamble

The Principal intends to award, under laid-down organizational procedures, contract/s for _____

_____ (hereinafter referred to as "Contract"). The Principal values full compliance with all relevant laws of the land, rules and regulations, and the principles of economic use of resources, and of fairness and transparency in its relations with its Bidder(s)/ Contractor(s).

In order to achieve these goals, the Principal will appoint panel of Independent External Monitor(s) (IEMs), who will monitor the tender process and the execution of the contract for compliance with the principles mentioned above.

Section 1- Commitments of the Principal

1.1 The Principal commits itself to take all measures necessary to prevent corruption and to observe the following principles: -

1.1.1 No employee of the Principal, personally or through family members, will in connection with the tender for, or the execution of a contract, demand, take a promise for or accept, for self or third person, any material or immaterial benefit which the person is not legally entitled to.

1.1.2 The Principal will, during the tender process treat all Bidder(s) with equity and reason. The Principal will in particular, before and during the tender process, provide to all Bidder(s) the same information and will not provide to any Bidder(s) confidential/ additional information through which the Bidder(s) could obtain an advantage in relation to the tender process or the contract execution.

1.1.3 The Principal will exclude from the process all known prejudiced persons.

1.2 If the Principal obtains information on the conduct of any of its employees which is a penal offence under the Indian Penal Code 1860 and Prevention of Corruption Act 1988 or any other statutory penal enactment, or if there be a substantive suspicion in this regard, the Principal will inform its Vigilance Office and in addition can initiate disciplinary actions.

Section 2 - Commitments of the Bidder(s)/ Contractor(s)

2.1 The Bidder(s)/ Contractor(s) commit himself to take all measures necessary to prevent corruption. The Bidder(s)/ Contractor(s) commits himself to observe the following principles during participation in the tender process and during the contract execution.

2.1.1 The Bidder(s)/ Contractor(s) will not, directly or through any other person or firm, offer, promise or give to the Principal or to any of the Principal's employees involved in the tender process or the execution of the contract or to any third person any material, immaterial or any other benefit which he/ she is not legally entitled to, in order to obtain in exchange any advantage of any kind whatsoever during the tender process or during the execution of the contract.

2.1.2 The Bidder(s)/ Contractor(s) will not enter with other Bidder(s) into any illegal or undisclosed agreement or understanding, whether formal or informal. This applies in particular to prices, specifications, certifications, subsidiary contracts, submission or non-submission of bids or any other actions to restrict competitiveness or to introduce cartelization in the bidding process.

2.1.3 The Bidder(s)/ Contractor(s) will not commit any penal offence under the relevant Indian Penal Code (IPC) and Prevention of Corruption Act; further the Bidder(s)/ Contractor(s) will not use improperly, for purposes of competition or personal gain, or pass on to others, any information or document provided by the Principal as part of the business relationship, regarding plans, technical proposals and business details, including information contained or transmitted electronically.

2.1.4 Foreign Bidder(s)/ Contractor(s) shall disclose the name and address of agents and representatives in India and Indian Bidder(s)/ Contractor(s) to disclose their foreign principals or associates. The Bidder(s)/ Contractor(s) will, when presenting his bid, disclose any and all payments he has made, and is committed to or intends to make to agents, brokers or any other intermediaries in connection with the award of the contract.

2.2 The Bidder(s)/ Contractor(s) will not instigate third persons to commit offences outlined above or be an accessory to such offences.

2.3 The Bidder(s)/ Contractor(s) shall not approach the Courts while representing the matters to IEMs and shall await their decision in the matter.

Section 3 - Disqualification from tender process and exclusion from future contracts

If the Bidder(s)/ Contractor(s), before award or during execution has committed a transgression through a violation of Section 2 above, or acts in any other manner such as to put his reliability or credibility in question, the Principal is entitled to disqualify the Bidder(s)/ Contractor(s) from the tender process , terminate the contract, if already awarded, exclude from future business dealings and/ or take action as per the separate "Guidelines on Banning of Business dealings with Suppliers/ Contractors", framed by the Principal.

Section 4 - Compensation for Damages

4.1 If the Principal has disqualified the Bidder (s) from the tender process before award / order acceptance according to Section 3, the Principal is entitled to demand and recover the damages equivalent to Earnest Money Deposit/ Bid Security.

4.2 If the Principal is entitled to terminate the Contract according to Section 3, or terminates the Contract in application of Section 3 above , the Bidder(s)/ Cotractor (s) transgression through a violation of Section 2 above shall be construed breach of contract and the Principal shall be-entitled to demand and recover from the Contractor an amount equal to 5% of the contract value or the amount equivalent to Security Deposit/ Performance Bank Guarantee , whichever is higher, as damages, in addition to and without prejudice to its right to demand and recover compensation for any other loss or damages specified elsewhere in the contract.

Section 5 - Previous Transgression

5.1 The Bidder declares that no previous transgressions occurred in the last 3 (three) years with any other company in any country conforming to the anti-corruption approach or with any other Public Sector Enterprise in India that could justify his exclusion from the tender process.

5.2 If the Bidder makes incorrect statement on this subject, he can be disqualified from the tender process or the contract, if already awarded, can be terminated for such reason or action can be taken as per the separate "Guidelines on Banning of Business dealings with Suppliers/ Contractors", framed by the Principal.

Section 6 - Equal treatment of all Bidder (s)/ Contractor (s) / Sub-contractor (s)

6.1 The Principal will enter into Integrity Pacts with identical conditions as this Integrity Pact with all Bidders and Contractors.

6.2 In case of Sub-contracting, the Principal Contractor shall take the responsibility of the adoption of Integrity Pact by the Sub-contractor(s) and ensure that all Sub-contractors also sign the Integrity Pact.

6.3 The Principal will disqualify from the tender process all Bidders who do not sign this Integrity Pact or violate its provisions.

Section 7 - Criminal Charges against violating Bidders/ Contractors /Subcontractors

If the Principal obtains knowledge of conduct of a Bidder, Contractor or Subcontractor, or of an employee or a representative or an associate of a Bidder, Contractor or Subcontractor which constitutes corruption, or if the Principal has substantive suspicion in this regard, the Principal will inform the Vigilance Office.

Section 8 -Independent External Monitor(s)

8.1 The Principal appoints competent and credible panel of Independent External Monitor (s) (IEMs) for this Integrity Pact. The task of the IEMs is to review independently and objectively, whether and to what extent the parties comply with the obligations under this Integrity Pact.

8.2 The IEMs are not subject to instructions by the representatives of the parties and performs his functions neutrally and independently. He reports to the CMD, BHEL.

8.3 The IEMs shall be provided access to all documents/ records pertaining to the Contract, for which a complaint or issue is raised before them as and when warranted. However, the documents/records/information having National Security implications and those documents which have been classified as Secret/Top Secret are not to be disclosed.

8.4 The Principal will provide to the IEMs sufficient information about all meetings among the parties related to the Contract provided such meetings could have an impact on the contractual relations between the Principal and the Contractor. The parties offer to the IEMs the option to participate in such meetings.

8.5 The advisory role of IEMs is envisaged as that of a friend, philosopher and guide. The advice of IEMs would not be legally binding and it is restricted to resolving issues raised by a Bidder regarding any aspect of the tender which allegedly restricts competition or bias towards some Bidders. At the same time, it must be understood that IEMs are not consultants to the Management. Their role is independent in nature and the advice once tendered would not be subject to review at the request of the organization.

8.6 For ensuring the desired transparency and objectivity in dealing with the complaints arising out of any tendering process or during execution of Contract, the matter should be examined by the full panel of IEMs jointly, who would look into the records, conduct an investigation, and submit their joint recommendations to the Management.

8.7 The IEMs would examine all complaints received by them and give their recommendations/ views to the CMD, BHEL at the earliest. They may also send their report directly to the CVO, in case of suspicion of serious irregularities requiring legal/ administrative action. Only in case of very serious issue having a specific, verifiable Vigilance angle, the matter should be reported directly to the Commission. IEMs will tender their advice on the complaints within 30 days.

8.8 The CMD, BHEL shall decide the compensation to be paid to the IEMs and its terms and conditions.

8.9 IEMs should examine the process integrity, they are not expected to concern themselves with fixing of responsibility of officers. Complaints alleging mala fide on the part of any officer of the Prinicpal should be looked into by the CVO of the Principal.

8.10 If the IEMs have reported to the CMD, BHEL, a substantiated suspicion of an offence under relevant Indian Penal Code / Prevention of Corruption Act, and the CMD, BHEL has not, within reasonable time, taken visible action to proceed against such offence or reported it to the Vigilance Office, the IEMs may also transmit this information directly to the Central Vigilance Commissioner, Government of India.

8.11 After award of work, the IEMs shall look into any issue relating to execution of Contract, if specifically raised before them. As an illustrative example, if a Contractor who has been awarded the Contract, during the execution of Contract, raises issue of delayed payment etc. before the IEMs, the same shall be examined by the panel of IEMs. Issues like warranty/ guarantee etc. shall be outside the purview of IEMs.

8.12 However, the IEMs may suggest systemic improvements to the management of the Principal, if considered necessary, to bring about transparency, equity and fairness in the system of procurement.

8.13 The word 'Monitor' would include both singular and plural.

Section 9 - Pact Duration

9.1 This Integrity Pact shall be operative from the date this Integrity Pact is signed by both the parties till the final completion of contract for successful Bidder, and for all other Bidders 6 months after the Contract has been awarded. Any violation of the same would entail disqualification of the bidders and exclusion from future business dealings.

9.2 If any claim is made/ lodged during currency of this Integrity Pact, the same shall be binding and continue to be valid despite the lapse of this Pact as specified above, unless it is discharged/ determined by the CMD, BHEL.

Section 10 - Other Provisions

10.1 This Integrity Pact is subject to Indian Laws and exclusive jurisdiction shall be of the competent Courts as indicated in the Tender or Contract, as the case may be.

10.2 Changes and supplements as well as termination notices need to be made in writing.

10.3 If the Bidder(s)/ Contractor(s) is a partnership or a consortium or a joint venture, this Integrity Pact shall be signed by all partners of the partnership or joint venture or all consortium members.

10.4 Should one or several provisions of this Integrity Pact turn out to be invalid, the remainder of this Integrity Pact remains valid. In this case, the parties will strive to come to an agreement to their original intentions.

10.5 Only those bidders / contractors who have entered into this Integrity Pact with the Principal would be competent to participate in the bidding. In other words, entering into this Integrity Pact would be a preliminary qualification.

10.6 In the event of any dispute between the Principal and Bidder(s)/ Contractor(s) relating to the Contract, in case, both the parties are agreeable, they may try to settle dispute through Mediation before the panel of IEMs in a time bound manner. In case, the dispute remains unresolved even after mediation by the panel of IEMs, either party may take further action as the terms & conditions of the Contract. The fees/expenses on dispute resolution through mediation shall be shared by both the parties. Further, the mediation proceedings shall be confidential in nature and the parties shall keep confidential all matters relating to the mediation proceedings including any settlement agreement arrived at between the parties as outcome of mediation. Any views expressed, suggestions, admissions or proposals etc. made by either party in the course of mediation shall not be relied upon or introduced as evidence in any further arbitral or judicial proceedings, whether or not such proceedings relate to the dispute that is the subject of mediation proceedings. Neither of the parties shall present IEMs as witness in any Alternative Dispute Resolution or judicial proceedings in respect of the dispute that was subject of mediation.

For & On behalf of the Principal
(Office Seal)

For & On behalf of the Bidder/ Contractor
(Office Seal)

Place NOIDA(UP)
Date _____

Witness:_____
(Name & Address) _____
_____

Witness:_____
(Name & Address) _____
_____

FORMAT OF NO DEVIATION CERTIFICATE
(To be submitted in the bidder's letter head)

REF: ……. **Dated**…….

BHARAT HEAVY ELECTRICALS LIMITED,
TRANSMISSION BUSINESS GROUP,
Plot No- 25, Sector- 16A, Noida,
Distt. Gautambudh Nagar, UP-201301

SUB.: Tender for "CONSTRUCTION OF TOWER & EQUIPMENTS FOUNDATIONS, PANEL ROOM, REACTOR, ROAD, TRENCH, DRAIN, METAL SPREADING, FENCE & GATE, OPEN STORE & EARTHING WORKS ETC. OF 400 KV SWITCHYARD AT OPTCL DUBRI PARADIP IN ODISHA".

TENDER NO.: - TBSM/OPTCL-DUBRI/CIVIL/TENDER/23-24 **Date: 06.06.2023**

Dear Sir,

With reference to above, this is to confirm that as per tender conditions, we have visited subject site before submission of our offer and noted the job content & site conditions etc.

We also confirm that we have not changed / modified the tender documents as appeared in the website and in case of observance at any stage, it shall be treated as null and void. We hereby confirm that we have not taken any deviation from tender clauses together with other references as enumerated in the above referred NIT and we hereby convey our unqualified acceptance to all terms and conditions as stipulated in the tender and NIT. In the event of observance of any deviation in any part of our offer at a later date whether implicit or explicit, the deviations shall stand null & void.

We confirm to have submitted offer strictly in accordance with tender instructions.

Thanking you,

Yours faithfully,

(Signature, date & seal of authorized representative of the bidder)

DECLARATION FOR RELATION IN BHEL

(To be typed and submitted in the Letter Head of the Company/Firm of Bidder failing which the offer of Bidder is liable to be summarily rejected)

Ref: **Date……..**

To,
AGM/TBSM
BHARAT HEAVY ELECTRICALS LIMITED,
TRANSMISSION BUSINESS GROUP,
PLOT NO.-25, SECTOR-16A,
NOIDA – 201301 (U.P.)

Dear Sir,

Sub: Declaration for relation in BHEL

Ref: 1) NIT/Tender Specification No. **TBSM/OPTCL-DUBRI/CIVIL/TENDER/23-24, Date: - 06.06.2023**

I/We hereby submit the following information pertaining to relation/relatives of Proprietor/ Partner(s)/Director(s) employed in BHEL

Tick (√) any one as applicable:

1. The Proprietor, Partner(s), Director(s) of our Company/Firm DO NOT have any relation or relatives employed in BHEL

OR

2. The Proprietor, Partner(s), or Director(s) of our Company / Firm HAVE relation / relatives employed in BHEL and their particulars are as below:

a)

b)

Signature of the Authorized Signatory

Note:

1) Attach separate sheet, if necessary.
2) If BHEL Management comes to know at a later date that the information furnished by the Bidder is false, BHEL reserves the right to take suitable against the Bidder/ Contractor.

FORMATS FOR EPAYMENTS

To,

Sr.DGM (Finance)
Transmission Business Group
BHEL, TBG Finance,
Plot no. - 25, Sector - 16A
Noida - 201301; U.P.

Subject: E-Payments vide RTGS/NEFT

I/We request and authorise you to effect Epayment vide any of the above two modes to my/our bank account as per the details given below:

Vendor Name	:
Title/Name of Account in the bank	:
Account Type(Saving /current)	:
Bank Account Number	
Name & address of Bank	
Bank /Branch contact person's name	:
Bank /Branch Tele Numbers with STD code	:
Bank Branch MICR code	(please enclose a copy of a cheque. This cheque should not be a payable at par cheque)
Bank Branch RTGS IFSC code	
Bank Branch NEFT IFSC code	(you can obtain this from branch where you have your account)
Your Email address	: **(not more than 20 character)**
Name of the Authorised Signatory	: (Please mention here name of person from your organization signing this letter.)
Contact Person's name	: (please mention here the name of a person in your company/organization)

I/We confirm that information provided above is correct & any consequences due to any mistake in above will be borne by us.

Thanking you

For
(Autorised Signatory)

We confirm that we are enabled for receiving RTGS/NEFT credits and we further confirm that the account number of (Please mention here name of the account holder), the signature of the authorised signatory and the MICR and IFSC Codes of our branch mentioned above are correct.

Bank's Verification
(Manager's/Officers signature under
bank Stamp)

Note:- Please attach cancelled original Cheque leaf.