BHARAT HEAVY ELECTRICALS LIMITED

TRANSMISSION BUSINESS GROUP
SUBCONTRACTS MANAGEMENT
10TH Floor, Plot no: - C-20, 1A/1, Joy tower,
C Block, Phase 2, Industrial Area Sector-62,
Noida, Distt. Gautambudh Nagar, UP-201301

TENDER DOCUMENTS

FOR

EXECUTION & HANDING OVER OF CIVIL WORKS OF SITE LEVELING WORK & CONSTRUCTION OF TOWER & EQUIPMENT'S FOUNDATIONS, CABLE TRENCHE, ROAD, DRAIN, FENCING, FIRE FIGHTING, PUMP HOUSE & WATER TANK AT 400kV YARD of 400/220kV SUB-STATION NEEMUCH (NEW) AT NEEMUCH IN MADHYA PRADESH.

CUSTOMER

M/s POWERGEID CORPORATION OF INDIA LTD.

TENDER SPEC. NO.: TBSM/NEEMUCH/CIVIL/PKG-I/TENDER/22-23

DATE: 27.10.2022

TRANSMISSION BUSINESS GROUP

SUBCONTRACTS MANAGEMENT

INDEX

Sl. No.	Description	No. of Pages
1.0	**Notice Inviting Tender**	10
2.0	**Pre-Qualifying Requirements**	02
3.0	**Project Information/ BHEL's Contacts**	01
4.0	**Health, Safety & Environment specification** ***(Doc. No.:- TBG/HSE/NIT-01, Rev-01 Date 22.10.2021)***	18
5.0	**Condition of Contract for Civil Works**	70
6.0	**Annexure to conditions of contract for Civil Works**	25
7.0	**Annexure A of Clause No. N of Annexure to conditions of contract for Civil Works -"BHEL Conciliation Scheme"**	11
8.0	**Bill Of Quantity Cum price schedule**	10
9.0	**Price Bid Format: - To be filled by the Bidder Online through** https://eprocurebhel.co.in.	01
10.0	**Scope, Specific Technical Requirements and Technical Specification** *(Document No. TB-418-607-003-PG-NEEMUCH-PKG 1)*	108
11.0	**Integrity Pact**	05
12.0	**No Deviation Certificate**	01
13.0	**Declaration for relation in BHEL**	01
14.0	**E payment Format**	01

BHARAT HEAVY ELECTRICALS LIMITED

TRANSMISSION BUSINESS GROUP

SECTOR-62, NOIDA -201301

e-mail: tbsm@bhel.in

NOTICE INVITING TENDER

REF.: TBSM/NEEMUCH/CIVIL/PKG-I/TENDER/22-23 **DATE: 27.10.2022**

SUB: TENDER FOR "EXECUTION & HANDING OVER OF CIVIL WORKS OF SITE LEVELING WORK & CONSTRUCTION OF TOWER & EQUIPMENT'S FOUNDATIONS, CABLE TRENCHE, ROAD, DRAIN, FENCING, FIRE FIGHTING, PUMP HOUSE & WATER TANK AT 400kV YARD of 400/220kV SUB-STATION NEEMUCH (NEW) AT NEEMUCH IN MADHYA PRADESH".

Dear Sirs,

1. **Sealed tenders are invited for the following:**

NAME OF WORK	TIME OF COMPLETION	EARNEST MONEY DEPOSIT (Rs.)	TENDER SUBMISSION DATE AND TIME	TENDER OPENING DATE & TIME
EXECUTION & HANDING OVER OF CIVIL WORKS OF SITE LEVELING WORK & CONSTRUCTION OF TOWER & EQUIPMENT'S FOUNDATIONS, CABLE TRENCHE, ROAD, DRAIN, FENCING, FIRE FIGHTING, PUMP HOUSE & WATER TANK AT 400kV YARD of 400/220kV SUB-STATION NEEMUCH (NEW) AT NEEMUCH IN MADHYA PRADESH	May, 2023	Rs. 15,55,430/- As per Annexure to conditions of contract for civil works	10.11.2022 14.30 hrs.	10.11.2022 15.30 hrs. (Technical bid only)

2. Bidder **has** to submit offer directly through E-PROCURMENT MODE. Bidder may visit **https://eprocurebhel.co.in**

Procedure for Submission of Tenders through e tendering : The tender is also floated online through our E-Procurement Site https://eprocurebhel.co.in . The bidder may respond by submitting their offer online in our e-Procurement platform at https://eprocurebhel.co.in

Offers are invited in two-parts only.

Documents Comprising the e-Tender

The tender shall be submitted online EXCEPT EMD (which shall be submitted in physical form (as described in NIT cl. No.1) above as mentioned below:

a. Technical Bid (Un priced Tender)

All Technical details (eg. Eligibility Criteria requested (as mentioned below)) should be attached in e-tendering module, failing which the tender stands invalid & may be REJECTED. Bidders shall furnish the following information along with technical tender (preferably in pdf format):

- **i.** Earnest money Deposit (EMD) furnished in accordance with NIT Clause 4.0
- **ii.** Technical Bid (without indicating any prices).

b. Price Bid:

- i. Prices are to be quoted in the attached Price Bid format online on e-tender portal.
- ii. The price should be quoted for the accounting unit indicated in the e-tender document.

iii. Note: It is the responsibility of tenderer to go through the Tender document to ensure furnishing all required documents in addition to above, if any. Any deviation would result in REJECTION of tender and would not be considered at a later stage at any cost by BHEL.

iv. A person signing (manually or digitally) the tender form or any documents forming part of the contract on behalf of another shall be deemed to warrantee that he has authority to bind such other persons and if, on enquiry, it appears that the persons so signing had no authority to do so, the purchaser may, without prejudice to other civil and criminal remedies, cancel the contract and hold the signatory liable for all cost and damages.

v. A tender, which does not fulfil any of the above requirements and/or gives evasive information/reply against any such requirement, shall be liable to be ignored and rejected.

c. Uploading of the price bid in prequalification bid or technical bid may RESULT IN REJECTION of the tender.

d. Tenders shall be uploaded with all relevant PDF/zip format. The relevant tender documents should be uploaded by an authorized person having Class 3- SHA2- 2048 BIT- SIGNING & ENCRYPTION digital signature certificate (DSC).

3. **Tender must be accompanied by the prescribed amount of Earnest Money Deposit (EMD) in the manner described in "Annexure to the Conditions of contract for civil work "which shall be part of the Technical Bid.**

   In case of E-Tenders, no paper bids shall be accepted, therefore, the scanned copy of the Banker's Cheque/ Demand Draft/ Pay Order/ Details of payment made through Electronic Fund Transfer/ Fixed Deposit Receipt (FDR) / Bank Guarantee should be uploaded in the E-Procurement Portal and hard copy of the same should reach to following address at before the due date and time of bid submission. BHEL shall not be responsible for postal or any other delays in this regard.)

TENDER SPEC. NO.: TBSM/NEEMUCH/CIVIL/PKG-I/TENDER/22-23 DATE: 27.10.2022

TO,

Dipak Kumar Mandal
AGM (TBSM)
BHARAT HEAVY ELECTRICALS LIMITED,
TRANSMISSION BUSINESS GROUP,
10TH Floor, Plot no.: - C-20, 1A/1, Joy Tower,
C Block, Phase 2, Industrial Area
Sector-62, Noida, Distt. Gautambudh Nagar, UP-201301
TELEPHONE: 0120-6748134, 99111 63182
E-mail: dipak.mandal@bhel.in

4. **Bidders may please note that no other mode of bid submission shall be considered for evaluation apart from Clause no. 02 to 03 mentioned above.**

5. The prospective bidders who have downloaded the tender documents from our website are requested to send their acknowledgement and willingness to participate in the tender to the undersigned, through fax or email.

6. Offers should be strictly in accordance with the Tender Specifications and General Instructions to Tenderer enclosed herewith.

7. "BHEL shall be resorting to Reverse Auction (RA) (Guidelines as available on www.bhel.com) for this tender. RA shall be conducted among all the techno-commercially qualified bidders.

   Price bids of all techno-commercially qualified bidders shall be opened and same shall be considered for RA. In case any bidder(s) do(es) not participate in online Reverse Auction, their sealed envelope price bid along with applicable loading, if any, shall be considered for ranking."

8. The contractor shall give his explicit confirmation without any deviations to the HSE (Health, Safety and Environment) requirements as per enclosed specification No. TBSM/HSE/NIT-01, Rev-01 Date 22.10.2021. Contactors are also required to furnish details as per Annexure (HSE) to NIT along with their offer. Offers received without compliance & data about HSE requirements are liable to be rejected.

9. All documents submitted with the offer shall be signed and stamped in each page by authorized representative of the bidder.

10. Clarifications, if any, can be obtained from the undersigned but such requests should be submitted well before the due date for submission of tenders. Due date for submission and opening of tenders will not be extended on such grounds.

11. Please note that wherever there is a contradiction between the 'Annexure to conditions of contract for civil works' and 'Conditions of contract for civil works', the 'Annexure to conditions of contract for civil works' clauses shall be governing and binding on the contractor.

12. Drawings & FQP enclosed with the NIT (if provided) are for tender purpose only. Drawings & FQP may get change during execution stage and work to be carried as per latest RFC drawings & Field Quality Plan (FQP).

13. Construction/ RFC drawing/ Fronts shall be furnished progressively as per project requirement and no claim towards idling charges/ project overheads etc. borne by the contractor on account of non availability of drawings/ fronts shall be entertained.

14. Completion period of the work has been envisaged under best possible conditions. Any changes/ deviation during execution shall be dealt as per relevant clauses mentioned in general/ special conditions of contract for civil works.

15. *"In case this tender is awarded to first time contractor*, then the bidder shall be eligible to qualify for the next tender of similar work# of BHEL, TBG; only after successful executing of 50% (fifty percent) of this work prior to the date of next tender (in which bidder desires to quote) and on satisfactory performance feedback by BHEL site Incharge."*

    ** First time contractor: The bidders who have not successfully executed more than 50% (fifty percent) of awarded similar work by BHEL (TBG/ ISG/Power Sector/Any BHEL Unit) in last 5 years from date of NIT.*

    The bidders who have taken any order from BHEL under 1st time category, and desires to further participate in BHEL tenders, needs to submit a certificate/ undertaking mentioning the reason of not executing 50% of awarded work, hence the criteria under 1st time bidder shall not be applicable to them. The certificate/ undertaking shall be duly certified by Site In charge of BHEL

    # Similar work: Similar to nature of work of the tender under consideration.

16. The Bidders are advised to visit Site to have better understanding of job.

17. The offers of the bidders who are under suspension as also the offers of the bidders, who engage the services of the banned firms, shall be rejected. The list of banned firms is available on BHEL web site www.bhel.com.

1.0 Integrity commitment, performance of the contract and punitive action thereof:

1.1. Commitment by BHEL:

BHEL commits to take all measures necessary to prevent corruption in connection with the tender process and execution of the contract. BHEL will during the tender process treat all Bidder(s) in a transparent and fair manner, and with equity.

1.2. Commitment by Bidder/ Supplier/ Contractor:

1.2.1. The bidder/ supplier/ contractor commit to take all measures to prevent corruption and will not directly or indirectly influence any decision or benefit which he is not legally entitled to nor will act or omit in any manner which tantamount to an offence punishable under any provision of the Indian Penal Code, 1860 or any other law in force in India.

1.2.2. The bidder/ supplier/ contractor will, when presenting his bid, disclose any and all payments he has made, and is committed to or intends to make to agents, brokers or any other intermediaries in connection with the award of the contract and shall adhere to relevant guidelines issued from time to time by Govt. of India/ BHEL.

1.2.3. The bidder/ supplier/ contractor will perform/ execute the contract as per the contract terms & conditions and will not default without any reasonable cause, which causes loss of business/ money/ reputation, to BHEL.

If any bidder/ supplier/ contractor during pre-tendering/ tendering/ post tendering/ award/ execution/ post-execution stage indulges in mal-practices, cheating, bribery, fraud or and other misconduct or formation of cartel so as to influence the bidding process or influence the price or acts or omits in any manner which tantamount to an offence punishable under any provision of the Indian Penal Code, 1860 or any other law in force in India, then, action may be taken against such bidder/ supplier/ contractor as per extant guidelines of the company available on www. bhel.com and/or under applicable legal provisions".

18. Also, offer of the bidders who are suspended (under hold/ delist) for business dealings by BHEL, TBG shall not be considered. Please note that lifting/ restoration of suspension (Ban/Hold/ De-list) of business dealing is not automatic after expiry of specified suspension period. Hence, vendor shall be considered as suspended for business till suspension is lifted by BHEL in writing on specific request of the vendor as per extant guidelines.

19. BHEL Fraud Prevention Policy, "The Bidder along with its associate/ collaborators/ sub-contractors/ sub-vendors/ consultants/ service providers shall strictly adhere to BHEL Fraud Prevention Policy displayed on BHEL website http://www.bhel.com and shall immediately bring to the notice of BHEL Management about any fraud or suspected fraud as soon as it comes to their notice."

20. Offers will be scrutinized based on the qualifying requirements and only those who are technically and financially capable to execute the Job and who fulfil the Pre-Qualifying Requirements (PQR) are eligible to quote against the above NIT. However, final acceptance of the bidder/ offer shall be subject to acceptance of our customer.

21. The evaluation currency for this tender shall be INR.

22. The Submission of EMD is compulsory for subject tender. In case requisite Amount of EMD not submitted by the bidder before tender opening or along with offer, the offer shall not be considered for evaluation and the offer shall be rejected.

23. In the course of evaluation, if more than one bidder happens to occupy L-1 status, effective L-1 will be decided by soliciting discounts from the respective L-1 bidders.

    In case more than one bidder happens to occupy the L-1 status even after soliciting discounts, the L-1 bidder shall be decided by toss/ draw of lots, in the presence of the respective L-1 bidder(s) or their representative(s).

    Ranking will be done accordingly. BHEL's decision in such situations shall be final and binding.

24. Technical Bid will be opened in the office of undersigned. If required, technical discussions will be held with only those bidders who have taken any deviations. Bidders representative may be present during technical bid opening for technical discussion, if required. The price bids will be opened subsequently, after Technical Bids of all the bidders have been evaluated and freezed. Bidders should quote their most competitive rates as there will not be any price negotiation. However, if felt necessary by BHEL, price negotiation will be held with lowest bidder (L-1) only. **IT WOULD BE PREFERRED THAT YOUR OFFER IS WITHOUT ANY DEVIATION w.r.t. TENDER SPECIFICATIONS AND**

THE SAME MAY BE CLEARLY MENTIONED ON THE COVERING LETTER ACCOMPANYING THE TECHNICAL BID. Offers with deviations are likely to be rejected. However if the bidder insists on any technical or commercial deviations, from the specification and/or tender conditions, the price implication if any, of withdrawing the deviations must be submitted along with the price bid in a separate sealed envelope superscribed "Price Implication for withdrawal of deviations".

25. In case any adverse information is received concerning performance, capability or conduct of the bidder after issue of tender enquiry, BHEL reserves the right to reject the offer at any stage as deemed fit.

26. **Integrity Pact (IP)**

(a) IP is a tool to ensure that activities and transactions between the Company and Its Bidders/ Contractors are handled in a fair, transparent and corruption free manner. Following Independent External Monitors (IEMs) on the present panel have been appointed by BHEL with the approval of CVC to oversee implementation of IP in BHEL

Sl no.	IEM	E- mail
1	Shri Otem Dai, IAS (Retd.)	iem1@bhel.in
2	Shri Bishwamitra Pandey, IRAS (Retd.)	Iem2@bhel.in
3.	Shri Mukesh Mittal, IRS (Retd.)	Iem3@bhel.in

(b) The IP as enclosed with the tender is to be submitted (duly signed by authorized signatory) along with techno-commercial bid (part-I in case of Two/ Three Part Bid). Only **those bidders who have entered into such an IP with BHEL would be competent to participate in the bidding**. In other words, entering into this Pact would be a preliminary qualification,

(c) Please refer Section-8 of the IP for Role and Responsibilities of IEMs. In case of any complaint arising out of the tendering process, the matter may be referred to any of the above IEM(s). All correspondence with the IEMs shall be done through e-mail only.

Note: -

No routine correspondence shall be addressed to the IEM (phone/ post/ email) regarding the clarifications, time extensions or any other administrative queries, etc. on the tender issued. All such clarification/ issues shall be addressed directly to the tender issuing (procurement) department's officials whose contact details are provided below":

Details of contact person (s): -

1) Name: - Dipak Kumar Mandal Department: - TBG, Subcontracting Address: - BHEL/ TBG, Noida Phone: - 01206748134 E mail:- dipak.mandal@bhel.in	2) Name: - Rajoo Kumar Department: - TBG, Subcontracting Address: - BHEL/ TBG, Noida Phone: - 01206748551 E mail:- rajoo.kumar@bhel.in

27. Any materials (if required) for civil works have to be procured from Customer approved sources only. It will be the bidder's responsibility to get the approval of materials and vendors for materials.

28. The purchase preference for central P.S.U.s shall be given as per the prevailing Government policy.

29. Work schedule and the deployment of manpower and T&P resources committed by the contractor in their offer, to match the scheduled completion, shall be submitted by contractor and mutually agreed with site In-charge immediately after the award of work. Further, the contractor shall mobilise at site within two weeks of award of work.

30. In case an offer is not being submitted by the prospective bidders against this tender, they may send their "regret" letter to this office, for information.

31. Details of qualifying work(s) executed by the bidder will be forwarded to the principal employer for verification of the work with respect to completion, commencement & completion date and value of

the work executed. Performance feedback of the bidder will also be sought from the principal employer.

32. The bidder representative may be called for discussion with the committee. His originals may be verified by the committee. In addition to above their organisation chart and detail list of manpower, tools & plants and technically capability will be discussed and ascertained by the committee.

Thanking you,

Yours faithfully,
For and on behalf of BHEL,

(Dipak Kumar Mandal)
AGM /TBSM

TO BE FILLED BY TENDERER OVER THEIR LETTERHEAD

REF.: TBSM/NEEMUCH/CIVIL/PKG-I/TENDER/22-23 **DATE: 27.10.2022**

SUB: TENDER FOR "EXECUTION & HANDING OVER OF CIVIL WORKS OF SITE LEVELING WORK & CONSTRUCTION OF TOWER & EQUIPMENT'S FOUNDATIONS, CABLE TRENCHE, ROAD, DRAIN, FENCING, FIRE FIGHTING, PUMP HOUSE & WATER TANK AT 400kV YARD of 400/220kV SUB-STATION NEEMUCH (NEW) AT NEEMUCH IN MADHYA PRADESH".

It is certified that General Instructions and Information for tenderer have been read/ complied/ agreed to and each page of tender offer has been initialled and stamped.

Also It is being declares that we (……Bidder Name …….) will not enter into any illegal or undisclosed agreement or understanding, whether formal or informal with other Bidder(s). This applies in particular to prices, specifications, certifications, subsidiary contracts, submission or non-submission of bids or any other actions to restrict competiveness or to introduce cartelization in the bidding process.

In case, the Bidder is found having indulged in above activities, suitable action shall be taken by BHEL as per extant policies/ guidelines

(Signature of Tenderer)

Name and Designation of Authorised person (s)
Signing the tender on behalf of the tenderer

Authorization of representative who will participate in the on line Reverse Auction Process:

1	NAME & DESIGNATION OF OFFICIAL	
2	POSTAL ADDRESS (COMPLETE)	
3	TELEPHONE NOS. (LAND LINE & MOBILE BOTH)	
4	FAX NO.	
5	E-MAIL ADDRESS	
6	NAME OF PLACE / STATE / COUNTRY, WHEREFROM S/HE WILL PARTICIPATE IN THE REVERSE AUCTION	

BHARAT HEAVY ELECTRICALS LIMITED
TRANSMISSION BUSINESS GROUP, NOIDA

PRE-QUALIFYING REQUIREMENTS

Tender Ref. No.: TBSM/NEEMUCH/CIVIL/PKG-I/TENDER/22-23 **DATE: 27.10.2022**

SUB: TENDER FOR "EXECUTION & HANDING OVER OF CIVIL WORKS OF SITE LEVELING WORK & CONSTRUCTION OF TOWER & EQUIPMENT'S FOUNDATIONS, CABLE TRENCHE, ROAD, DRAIN, FENCING, FIRE FIGHTING, PUMP HOUSE & WATER TANK AT 400kV YARD of 400/220kV SUB-STATION NEEMUCH (NEW) AT NEEMUCH IN MADHYA PRADESH".

Sealed Tenders (Under two part bid system) are invited from competent civil contractors for subject civil works. Only those who are technically and financially capable to execute the Job and who fulfil the Pre-Qualifying Requirements [PQR] given under are eligible to quote against the above NIT. Tenderers should submit their offer in a sealed envelope as per the procedure specified in tender documents. The PQR of contractor for tender submission shall be is as under:

Sl. No.	Criteria	Description
A	Turn Over	Vendors should have a minimum average annual turnover of **Rs.2,33,31,455.70** for last three fin. Years (2018-19, 2019-20 & 2020-21 **OR** 2019-20, 2020-21 & 2021-22) and should submit audited balance sheet and Profit & Loss Account Sheet of these years. In case audited balance sheet is not available due to turnover being less than statutory requirement of audit, bidder should furnish self-certified copies of Balance Sheet, Profit & Loss account along with income tax returns.
B	Profit	Bidder should have earned profit in at least one year during last three financial years as mentioned in A above.
C	Similar Work	Bidder should have successfully executed "**civil works switchyard or Power Plant or industry which involves predominantly concrete work**" during last seven years ending on 31.10.2022 and should be either of the following i. Three similar jobs executed costing (except service tax/GST) not less than **Rs. 3,11,08,607.60**- each. OR ii. Two similar jobs executed costing (except service tax/GST) not less than **Rs. 3,88,85,759.50-** each. OR iii. One similar job executed costing (except service tax/GST) not less than **Rs. 6,22,17,215.20**

Note:

1. The Bidder shall submit the Contract Agreement/Work Order/LOI, BOQ/Drawings and Performance/completion/execution certificate issued by customer/contractor along with technical bid in support of qualification.
2. The word 'executed' means the bidder should have achieved the criteria specified in the PQR even if the total contract has not been completed or closed.

3. In order to technically qualify in this tender, bidder should meet all criteria i.e. A, B & C mentioned above.

4. If the job is executed in the last seven years period, as specified above, even if it has been started earlier, the same will also be considered meeting the qualifying requirements.

5. Consortium/ JV bidding is not allowed.

6. BHEL reserves the right to:

   (a) Accept or reject any bid received at its discretion without assigning any reasons whatsoever.

   (b) Postpone the above mentioned date, split and distribute the work among more than one bidder without assigning any reason whatsoever.

   (c) May ask for further qualification during techno commercial scrutiny of bids received.

   (d) May ask for further proofs including TDS certificates/ Form 26AS/ Final bill/ payment detail for the said job for cross- verification.

7. BHEL shall not be responsible for any delay, loss, damage for bids sent by post.

8. BHEL shall not be liable for any expenses incurred by bidder in preparation of bid irrespective of whether it is accepted or not.

9. Quotations received from bidders who do not fulfil the PQR shall be summarily rejected without any further evaluation and information to bidders.

10. Canvassing i.e. soliciting favour, seeking advantage etc. in any form is strictly prohibited and any bidder found to have engaged in canvassing shall be liable to have his bid rejected summarily.

11. If the bidder deliberately gives any wrong information in his tender to create in circumstances for the acceptance to his bid, BHEL reserves the right to reject such application.

12. Bidder's selection is subject to approval of BHEL's customer for this work. The approval/acceptance of bidders from Customer is mandatory requirement for subject tender.

13. All corrigenda, addenda, amendments and clarifications to this Tender will be hosted in web page, www.bhel.com and https://eprocurebhel.co.in and not in the newspaper. Bidders shall keep themselves updated with all such amendments.

PROJECT INFORMATION

1.0 CUSTOMER:

M/s POWERGEID CORPORATION OF INDIA LTD

2.0 PROJECT LOCATION AND DETAILS:

TENDER FOR EXECUTION & HANDING OVER OF CIVIL WORKS OF SITE LEVELING WORK & CONSTRUCTION OF TOWER & EQUIPMENT'S FOUNDATIONS, CABLE TRENCHE, ROAD, DRAIN, FENCING, FIRE FIGHTING, PUMP HOUSE & WATER TANK AT 400kV YARD of 400/220kV SUB-STATION NEEMUCH (NEW) AT NEEMUCH IN MADHYA PRADESH.

3.0 CONTACT PERSON: FOR CONTRACTUAL ISSUES

DIPAK KUMAR MANDAL
AGM (TBSM)
SUBCONTRACTS MANAGEMENT,
TRANSMISSION BUSINESS GROUP,
9TH Floor, Plot no.: - C-20, 1A/1, Joy tower,
C Block, Phase 2, Industrial Area
Sector-62, Noida, Distt. Gautambudh Nagar, UP-201301

PHONE: 0120-674-8134/ 99111 63182
E-mail: **dipak.mandal@bhel.in**

CONTACT PERSON: FOR ENGINEERING ISSUES

Paras Nath Keshri
Sr. Manager (TBEM)
TRANSMISSION BUSINESS GROUP,
TRANSMISSION BUSINESS GROUP,
10TH Floor, Plot no.: - C-20, 1A/1, Joy tower,
C Block, Phase 2, Industrial Area
Sector-62, Noida, Distt. Gautambudh Nagar, UP-201301

PHONE: 0120-674- 8573/ 9810487322
E-mail: **pnkeshri@bhel.in**

CONTACT PERSON: FOR CONTRACT EXECUTION ISSUES

Anand Kumar Tripathi
GM (TBSS & TBWS)
TRANSMISSION BUSINESS GROUP,
09TH Floor, Plot no.: - C-20, 1A/1, Joy tower,
C Block, Phase 2, Industrial Area
Sector-62, Noida, Distt. Gautambudh Nagar, UP-201301

PHONE: 0120-674-8620 / 96500 26888
E-mail: **anand@bhel.in**

HSE CONDITIONS
at a GLANCE (for bidders)

Health Safety and Environment Management

Transmission Business Group, Noida

DOCUMENT CONTROL			
Document number:	TBG/HSE/NIT-01		
Issue number:	00	Issue date:	08.01.2020
Revision number:	01	Revision date :	22.10.2021

	Prepared by	Checked by	Approved and Issued for use by
Name	Sanjeev Sharma	Arvind Kumar Pandey	Anindya Chakraborty
Designation	Addl. Engineer	Engineer	Adl. General Manager
Signature	-sd-	-sd-	-sd-
Date	22.10.2021	22.10.2021	22.10.2021

Doc. copy issue no. :	Doc. copy issue date :

	Name	Designation	Signature
Issued to :			
Issued by :			

BHARAT HEAVY ELECTRICALS LIMITED

TRANSMISSION BUSINESS GROUP

BHEL TBG through its long experience and policy, has developed a culture to consider wellbeing of the society, protection of environment and occupational health and safety of its workers first. TBG has also a culture of transparency in all its business activities. In line to this culture, this NIT annexure is prepared as a peeping window in to the TBG HSE requirements which need to be 100% complied by the successful bidders while executing the contract. Interested bidders should go through these HSE conditions:

1. BHEL HSE Policy

In BHEL, Health, Safety and Environment (HSE) responsibilities are driven by our commitment to protect our employees and people we work with, community and environment. BHEL believes in zero tolerance for unsafe work/non-conformance to safety and in minimizing environmental footprint associated with all its business activities. We commit to continually improve our HSE performance by:

- Developing safety and sustainability culture through active leadership and by ensuring availability of required resources.
- Ensuring compliance with applicable legislation, regulations and BHEL systems.
- Taking up activities for conservation of resources and adopting sound waste management by following Reduce/Recycle/Reuse approach.
- Continually identifying, assessing and managing environmental impacts and Occupational Health & Safety risks of all activities, products and services adopting approach based on elimination/ substitution/reduction/control.
- Incorporating appropriate Occupational Health, Safety and Environment criteria into business decisions, design of products & systems and for selection of plants, technologies and services.
- Imparting appropriate structured training to all persons at workplace and promoting awareness amongst customers, contractors and suppliers on HSE issues.
- Reviewing periodically this policy and HSE Management Systems to ensure its relevance, appropriateness and effectiveness.
- Communicating this policy within BHEL and making it available to interested parties.

June 5, 2018

Atul Sobti
Chairman & Managing Director

Creating BHEL of tomorrow

2. Legal Compliances:

a. Statutory Provisions: All the sub-contractors are to comply with client specific rules and procedures, the National legislations and codes, in particular the following or their revised versions:

Srl. No	Acts/Rules Name	Srl. No	Acts/Rules Name
1	The Factories Act 1948, Amendment Act 1947	11	Contractor labour Act, 1970 (Regulation and abolition)
2	The Environment Act 1986	12	Provident fund Act, 1952
3	Workmen's Compensation Act, 1923	13	Payment of gratuity Act, 1972
4	Building and Other Construction Workers (Regulation of employment and condition of service) Act, 1996	14	Indian Explosives Act and the explosives Rules 2008
5	Buildings and Other Construction Workers Welfare Act, 1996	15	The Gas Cylinder Rules, 2016, Static and Mobile Pressure Vessels (Unfired) Rules 2016
6	Payment of wages Act, 2017 Equal remuneration Act,	16	The Indian Electricity Act 2003 and Indian Electricity Rules 2005
7	Minimum wages Act.1948	17	The Atomic Energy Act, 2015
8	Employers liability Act, 1938	18	The atomic energy (Radiation Protection) Rules. 2004
9	Industrial dispute Act, 1947	19	National Fire Protection Association (NFPA),
10	maternity benefit amendment act 2017	20	National Building Code of India 2016 etc.

b. Indian Standard (IS) Codes related to HSE

All the sub-contractors are to comply with client specific rules and procedures, the National legislations and codes in particular the following or their revised versions:

Srl	IS Code	Applies on
1	IS: 4081 -1986	Safety code for Blasting and Related Drilling operations
2	IS: 3764 -1992	Safety code for excavation work
3	IS: 5121 -1969	Safety code for pilling and other deep foundations

4	IS: 2750 -1964	Specification for steel scaffoldings
5	IS: 3696 (Part-I)-1987	Safety code for scaffolds and Ladders: Part- I Scaffolds
6	IS: 3696 (Part-II) -1991	Safety code for scaffolds and Ladders: Part –II Ladders
7	IS: 4082 -1977	Recommendations on stacking and storage of construction materials at site (First revision)
8	IS: 4130-1976	Safety code for demolition of building (First revision)
9	IS: 4912-1978	Safety requirements for floor and wall openings, railings and toe boards (First revision)
10	IS: 5916- 1970	Safety code for constructions involving use of hot bituminous materials
11	IS: 7205 -1974	Safety code for erection of structural steel work
12	IS: 7969 -1975	Safety code for handling and storage of building materials
13	IS: 8989 -1978	Safety code for erection of concrete framed structures
14	IS: 7293 -1974	Safety code for working with construction machinery
15	IS: 2212 -1991	Pipe lines –Identification –Colour code
16	IS: 5216 -1982	Recommendations on safety procedures &practices in Electrical works (Part -I &II)
17	IS: 875 -1964	Code of practice for structural safety of buildings and loading standards
18	IS: 10386 -1983	General aspects Part-1 -1983, Part-2 -1982, Part-6 -1983, Part-10 -1983- Amenities, Protective clothing and equipment, construction, storage, handling, detection and Safety measures for gases, chemicals and flammable liquids
19	IS: 10500-2012	Drinking water (Specification)
20	IS: 10291 -1982	Code of dress in civil engineering works
21	IS: 2925-1984	Safety helmets
22	IS: 1179-1967	Welding helmets
23	IS: 7524 -1979 (Part-I)	Safety goggles
24	IS: 9167 -1979	Ear muff /Ear plugs
25	IS: 6994 -1973 (Part-I)	Canvas hand gloves, Cotton hand gloves, Chrome leather gloves
26	IS: 4770 -1991	Rubber hand gloves tested for 15,000 volts
27	IS: 3521 -1999	Full body safety harness
28	IS: 11057 -1984	Specification for Industrial safety nets
29	IS: 13415 -1992	Protective Barriers in & around buildings (Code of safety)

30	IS: 13416 -1992	Preventive measures against Hazards at work places-Recommendations part-I Falling materials hazards Prevention part-I
31	IS: 13416 -1992	Preventive measures against Hazards at work places-Recommendations part-II Fall Prevention
32	IS: 15298 -2011 (Part 1&2)	Personal Protective Equipment -Safety shoes
33	IS: 12254 -1993	Poly vinyl chloride (PVC) industrial boots
34	IS: 5557:2004	Industrial and Protective Rubber knee and Ankle boots
35	IS: 2878 -2004	Co2 Type fire extinguisher
36	IS: 2171 -1999	Dry chemical powder fire extinguisher
37	IS: 13849 – 1993	Fire extinguisher for ABC fires
38	IS: 10204-2001	Mechanical Foam type extinguisher (Foam used shall conform to IS: 4989 -1974 and Co2 cartridge shall conform to IS: 4947 -1985)
39	IS: 3786 -1983	Methods for computation of Frequency rate and Severity rates for Industrial injuries and classification of Industrial accidents (First revision)

c. The Sub-contractors need to

- Attend HSE familiarization program at TBG-HQ with his site management team. This will be a half day long awareness session on HSE requirements and compliances which the agency is supposed to fulfil during contract execution at site. The session shall be taken by TBG HSE department on intimation by TBSM. **(Rev-01)**
- Request for issuance of Form-V in their name from customer on behalf of BHEL
- Get the Labour license registration from concerned Labour office.
- Get the BOCW Registration done along with the labour license.
- Get their labourers registered under BOCW for benefits provided by the office.
- Maintain Seven registers of labours as per BOCW requirement.
- Ensure payment of wages to labours not less than the current minimum wages applicable in the premises.
- Ensure PF deduction of labourers and submission of proof to BHEL office (Wage sheet, ECR & Challan copies) duly signed.
- Submit Labour Payment Certificate by 10th of Every month.
- File timely returns, get renewals done and submit a copy to BHEL office.

- Get Workmen's Compensation policy before the start of work, covering all the labourers and staff,
  - Policy should clearly mention the project name and location,
  - should be as per labour class and wage.
  - Should cover all the height workers with clear mention of Max. height.
  - Policy should be submitted to BHEL office and renewal before expiry.
- Issue employment card to every worker.

3. Labour Welfare and Medical Facilities

a. Labour Welfare

1. Declaration of normal working hours and weekly off day, Payment day & intervals
2. Paid rest days & holidays.
3. Payment of overtime @ twice the normal wage rate.
4. No labour shall be allowed overtime >12 hrs/week, limited to 48 hrs/month.
5. Rest and lunch area.
6. Separate Male/Female Toilets and Lavatories, clearly marked in local Language and provided with signage.
7. Cold and clean drinking water facility suitable to strength and near workplace
8. Creche for children of female workers as per BOCW requirements
9. Arranging labour accommodation in hygienic environment with the facilities of Water (Drinking, Sanitation), washing and bathing area, toilets in sufficient nos., clean and safe camps and surrounding, access road, well illuminated camp and roads, mode of contact, transport facility, first aid centre, 24x7 Security etc.
10. Cooking and eating place to be maintained in hygienic condition
11. General awareness of health and hygiene.

b. Medical facilities and Health centres

- Availability of first aid box at every work location and agency office, with contents as per BOCW requirement.
- Emergency vehicle (four wheeler) at work place
- Availability of stretchers in emergency vehicle and in office.
- Trained first aider
- Medical check-up for all the supervisors and workers including cooks, at the time of induction and annually thereafter.
- Tetanus Vaccination for all in every six months.
- Identification and tie-up with nearby reputed hospital(s) and display of their contact number in Emergency contact list.

4. House Keeping & Storage

Housekeeping is a continuous process and is the part of work. Agencies shall maintain safe and presentable housekeeping all the time in their respective areas, common work locations and passage areas. Roads, passages, staircases, entrance/exit gates shall always be maintained obstruction free. No material shall be left or stacked at the roof edges. Agency shall make arrangements to remove scraps on regular basis and dispose them at a space provided by customer, clearly fenced and marked by the sub-contractor as **"SCRAP YARD"**. Suitable arrangement like dedicated housekeeping team and tractor/hydra should be identified for this work.

Construction materials like shuttering materials, staging materials, cables, re-bars, cements bags, earthing flats and rods, FF pipes, surplus soil etc should be stored/stacked properly such that it should neither pose threat to safety of man nor should obstruct the free movement of man and machineries.

Every sub-contractor should have separate and well maintained storage area for his own materials, T&Ps, PPEs and BHEL issued materials. Consumables like diesel, cotton, grease, oil, paint, admixtures and other fire potential materials should be stored separately with suitable firefighting facility.

Fire capacity of store area to be assessed and accordingly fire extinguishers shall be planned suiting the class and capacity of fire. Sand heaps may also be stacked in open store yards suitably to use in case of fires.

5. Site Safety

a. Induction and others safety trainings

Every sub-contractor shall make arrangement to provide induction training as per BHEL and/or customer requirement on a pre-approved and fixed module to all its new inductees irrespective of class or grade of appointment/hire. He shall also arrange the required facilities for induction training such as board, marker, dummy, posters/banners with all the mandatory PPEs.
Sub-contractor shall also arrange for periodic trainings on fire-fighting, first aid, CPR, importance and use of PPEs, electrical safety, hot work safety, Height work safety, confined space, deep excavations and barricading, concreting work safety etc.

b. Appointment of Safety Officer/Supervisor

Every sub-contractor shall appoint at least one full time qualified safety officer having qualification and experience as specified in Schedule-VIII of BOCW Act-1996. He shall not be assigned any duty/work other than assisting in upliftment of safety practices. He shall perform his duties in accordance with the requirements of Schedule-VIII of BOCW-1996. He shall ensure daily TBT, induction training, health check-up and other such compliances as per HSEP-14 on regular basis. In case of non-appointment, agency shall be penalized as per provisions in clause no. 7.0 of HSEP-14 (HSE Plan for Site Operations (subcontractors)) **(Rev-01)**

c. Safety organisation, Safety committees and meetings

Safety officer shall report directly to the head of the projects of the sub-contractor management. There shall be some appointed or nominated safety stewards from each sub-group like shuttering, bar-bending, concreting, brick work, material handling, structure erection, cable laying, pipe work, maintenance, batching plant, housekeeping etc.

A safety committee shall be formed including members from different agencies, BHEL and customer covering at-least 50% participation from workers. Safety committee shall meet on weekly basis or as may be decided by customer, outcomes shall be complied as committed.

d. Personal Protective Equipments.

Unless mentioned otherwise, there will be three mandatory PPEs- Safety shoes, Safety Helmet and Reflective jackets conforming to relevant IS codes as mentioned above.
Every person entering in the project premises shall use above mandatory PPEs.
There will be other PPEs too based on the work requirement like:
Twin lanyard full body harness, fall arresters and life lines for height workers,
Face shield for welders and grinders, Induction helmets and Electrical resistant shoes with FRP/PVC toe for electricians and commissioning engineers, Gum boots for concrete workers and manual excavators, Goggle for gas cutters and grinders, Aprons for welders, shoulder pads for material handlers, Hand gloves – Leather for binders/welders/grinders, certified Rubber gloves

for electricians, PVC for concrete/cement handlers, cotton-housekeeping team/brick coolies/erectors, cable laying men and other material handlers. Dust mask for cement handlers.

e. Material Handling

BHEL as a policy discourages continuous manual handling. Material handling contributes a major portion in the project and hence proper means (mechanical/ electrical powered) should be deployed appropriately for this work. Cranes/Faranas/hydras should not be used for material transportation for long distances(>100m), if such movement is un-avoidable, it must be accompanied by a trained signal man. Long materials should be guided by tagline. Roads for material movement should be free from obstructions. Lifting appliances must be in good condition and must have test/inspection certificates.
Lifting tackles like- D-shackles, chains, ropes, slings, belts shall be periodically inspected and shall have valid test certificate and/or third party inspection certificates.
Painted/galvanized structures/materials to be lifted by adequate capacity nylon belts only.
If a machine undergoes a major maintenance, fresh TPI shall be required before use. Hydraulic/pneumatic machines shall be free from leakages. Daily checklist to be filled and witnessed by the concerned supervisor before start of the work.

f. Vehicle/Machinery Documents and other safety requirements

- Crawler mounted boom cranes/Tyre mounted telescopic cranes/tower cranes
  1. Valid third party inspection certificate.
  2. Valid Insurance policy
  3. Registration Certificate (if applicable)
  4. Valid Pollution under control (PUC) (if applicable)
  5. Fitness certificate from RTO (if applicable)
  6. Operator's valid license, experience and/or competence certificate.
  7. Swing horn
  8. Reverse horn
  9. Boom aviation light
  10. Approved Load chart (inside cabin)
  11. Fire extinguisher (inside cabin)
  12. First aid kit (inside cabin)
  13. Boom angle indicator
  14. Hook Latch
  15. Reflector strips on around cabin and on boom

- Loader backhoe (JCB), crawler excavators (Poclain), Hydra,
  1. Valid third party inspection certificate.
  2. Valid Insurance policy
  3. Registration Certificate (if applicable)
  4. Valid Pollution under control (PUC) (if applicable)

5. Fitness certificate from RTO (if applicable)
6. Operator's valid commercial license, experience and/or competence certificate.
7. Reverse horn
8. Approved Load chart (inside cabin) (Hydra)
9. Fire extinguisher (inside cabin)
10. First aid kit (inside cabin)
11. Hook Latch (Hydra)
12. Reflector strips on around cabin and on boom

- Tipper, Transit mixtures (TM), Self-loading concrete mixture (Ajax Fiori), Tractors
    1. Valid third party inspection certificate.
    2. Valid Insurance policy
    3. Registration Certificate
    4. Valid Pollution under control (PUC)
    5. Fitness certificate from RTO
    6. Operator's valid commercial Heavy license, experience and/or competence certificate.
    7. Reverse horn
    8. Fire extinguisher (inside cabin)
    9. First aid kit (inside cabin)
    10. Reflector strips on around cabin and on body

Note: 1. Tractors may be allowed with Light Commercial/non-commercial license on customer's consent.

- Cars, Taxis, scooters, motor cycles and other public carriers
    - Valid 2/4 wheeler license (as applicable- commercial/non-commercial)
    - Registration Challan
    - Valid Insurance
    - Pollution under control

g. Man-lifts (Cherry pickers), Scissors Lifts

1. Trained operator with experience/competence certificate and license
2. Valid third party inspection certificate.
3. Valid Insurance policy
4. Registration Certificate (if applicable)
5. Valid Pollution under control (PUC) (if applicable)
6. Swing horn
7. Reverse horn
8. Boom aviation light
9. Fire extinguisher (inside cabin)
10. First aid kit (inside cabin)
11. Reflector strips on around cabin and on boom

Note:

1. No one shall ride man-lift bucket without safety belt, safety shoes, helmet and reflective jacket.
2. Not more than 3 persons at a time will board in bucket of man-lift (without any heavy materials) including operator.
3. Operator will not leave the machine while persons are elevated and working.
4. No one other than the authorised operator will operate the man lifts/Scissors lifts.

h. Excavation

Prior permission/clearance from customer is a must for excavations in areas where underground service services such as gas/water/oil/chemical/electrical lines may be routed. Due precautions shall be taken during excavation in such area. Excavations near water bodies (ponds/canals etc.) shall be done with sand/soil bags ready to plug water from accidental damaged/burst of edges. All the excavations shall be done by either step cutting (min. 600mm step at every 1.5m depth) or slope cutting at 1:2(X:Y axis) (or greater depending upon the soil condition). Where step cutting/slope cutting is not possible due to space constraints, shoring/shuttering or sheet piling to be used to check collapse of soil.

Excavated soil shall be stacked away from edge of the pit, at-least 1.5 meters or half of the depth whichever is higher. Height of the stack shall not exceed 2m in height.

Ramps shall be provided for access of the workers in large pits and ladder of metal/good built for small pits. Ladders shall be of sufficient length protruding at least 1m above the ground level.

Pumps of adequate capacity shall be available for pumping out of water. No lone worker shall be allowed to work in any excavation. Overloaded vehicle shall not be allowed near excavated pits.

i. Bar bending and Binding

Bar bending machine shall be installed under shed/roof. It shall be properly earthed and maintained for operation. Housekeeping of the area shall be team's responsibility on daily basis. All be bar benders shall be given hand gloves (leather/cotton) in addition to mandatory PPEs. Scrap shall be segregated and moved to scrap yard on regular basis. Bar bending station shall be located away from Main plying roads/passages. The station shall be well illuminated, shall have a maintained first aid kit and potable water. Station shall be located in such a way that the movement of the material be minimised.

j. Concreting

No electric vibrators shall be allowed to use. All the concrete workers shall be issued gum boots, safety helmets, reflective jackets and PVC hand gloves. Free fall of concrete from chute shall not exceed 1m in height. Heavy machineries/ vehicles shall be kept at least 2m away from the edge. Emergency vehicle shall be available near concreting work. Late night works shall be avoided, if it is unavoidable, a prior permission from BHEL/Customer is mandatory.

k. Welding, Gas Cutting & other hot works

Welding: Only experienced welders should be deployed for welding jobs. Welders shall be provided with apron, hand gloves, arm pads, leg pads, face shield and safety shoes. Welding leads shall be joint less and insulated. Power input point shall be fully covered at machine.

Gas cutting: If LPG is being used, domestic cylinder is strictly prohibited inside the project premises, (not allowed for site kitchen too). Hose pipes shall be in good condition without cracks, cuts, punctures or joints. Ends should be clamped with worm clamps. Dial gauges shall be of good quality and duly calibrated. Flash back arresters is a must for both oxygen/acetylene or LPG/Oxygen combination. Cylinders shall be stored, transported and used in vertical position only. When not in use, they shall be capped. Empty and filled cylinders to be stored separately with distinct marking.
Cylinders shall neither be rolled on the ground nor thrown during loading/unloading.

Grinding: Grinder shall be given clear glass face shield, apron, safety shoes, ear muffs and hand gloves. Grinder machines shall have wheel guard. Plug tops to be used for power connection preferably three wire type. Only trained persons shall be allowed to use grinders, abrasive cutters. Electrical connection shall be free from cuts, joints etc.

l. Erection & Height Work

Only trained filters and experienced helpers shall be engaged in erection work. Step bolts of lattice towers shall be checked for full tightness with spring washers before use. Height pass shall be issued to the identified group of erectors who have passed medical test and have working experience at height. Name of such workers shall be displayed at appropriate place. These workers only shall be allowed to work at height. Height work shall not be permitted in high wind/bad weather condition, during raining or in night/dark.

m. Electrical Safety

BHEL usually provided single point power source and sub-contractors draw power from there. Otherwise agencies make their own arrangement for construction power like DG sets etc. Sub-contractors shall submit their load requirement (amperage & phase) to BHEL before start of work. Accordingly, they shall make arrangements to draw power and distribution arrangements too in a safe way. MCCBs and HRC fuses to be put in circuit for short circuit and overload protections and RCCBs of 30mA sensitivity to be put at each distribution panel for human safety. Earthing pits shall be installed at each distribution point and maintained below three Ohm resistivity which shall be inspected randomly. The distribution points shall be clean, free from vegetation and water logging, easily accessible and covered/protected from three sides and top for rain. Earthing of DBs shall be done by 25x3mm GI flats connected from proper earth pits. Insulation mat, PVC Sheet/Wooden plank to be placed before DBs as platform. DB Sheds shall be legibly marked with name of agency, contact no of electrician and SLD of that DB. Only industrial plugs and sockets shall be allowed. Three wire (Phase, neutral and earth) system shall be used for tools, lights and machineries and two wire power draw shall be strictly prohibited. PTW and LOTO system shall be maintained to work on LT system. Name and contact no of authorised electricians who will be responsible of electrical power facility maintenance shall be submitted to BHEL by Agencies. Unauthorised sharing of power from one agency to other is strictly prohibited. Electricians shall use standard PPEs and insulated tools only. Standard and tested/certified discharge rods to be used in the areas where there is a possibility

of residual current or induction charge. The induction rod to be connected to the earth first and removed in the last. Induction helmets only to be used in the charged area. Electricians to be provided with electrical resistant safety shoes having FRP/PVC toe.

n. Dust Gases and fumes

Sub-contractor shall make arrangements to avoid accumulation of dust fumes and gases. Cement handlers inside store or at batching plant and gravel spreader shall be given effective nose masks and jaggery (at least 200g per person per day). DG sets and other machineries like cranes excavators etc. shall have valid and effective PUC certificate and shall have maintained engine with silencer. No IC engine operated machine shall be used in confined and covered area like hall, sheds, store etc. where accumulation due to lack of ventilation can increase to harmful levels. Dedicated arrangements (tanker or tractor with sprinkler) shall be made by the sub-contractors (individual or jointly) to continuously subside the dusts arising out of the movement of the vehicles roads/passages. Welding activities near roof accumulates harmful gases. Welders in such positions shall be provided with effective masks conforming to IS standards.

o. Vehicular Traffic

Speed limits defined within the premises shall strictly be followed by the drivers/commuters of construction as well as other vehicles.

Every construction machinery, man-lift shall display the name, contact no and passport size photograph of the authorised operator (There can be one or more authorised operators).

No one other than operator and co-operator shall sit inside the cabin of any construction machine while it is working.

Construction machineries (tractor, trucks, tippers, JCBs, hydra, Fassi cranes etc. shall never be used as mode of public transport. Machineries like Ajax Fiori and hydra shall not be driven in back direction except for small distances. No overloaded vehicle shall be permitted entry in the project premises.

Over speeding shall be reported and driver/operator shall be barred from entry or shall be penalised.

Drunken drivers shall be barred from entry in the project.

Carrying harmful weapons like knives (>6”), guns etc. shall permanently disqualify the person from entry in project premises.

p. Barricading and floor openings

Every pit deeper than 4 feet (1.2m) shall be barricaded immediately after excavation and will remain barricaded till backfilling.

Pits/trenches drains near roads, passages whether temporary or permanent shall be hard barricaded and well illuminated. Roof edges and openings shall be strictly hard barricaded and illuminated. Height works like masonry works, structure erection, erection by cranes, Lattice tower/beam erection areas shall be barricaded to restrict entry. Areas under charging/commissioning shall be barricaded and caution boards shall be displayed on newly charged areas.

q. Scaffold & Ladder

No bamboo/wooden scaffold shall be allowed to be used. Only tubular steel scaffolds with couplers conforming to the relevant IS codes shall be allowed with base plates. Standard steel or wooden planks to be used as platforms and no packing materials shall be used. All the platforms shall be built with provisions of **top rail at 1m height, mid rail at 0.5m height and toe boards of min 6" height** at floor level. Minimum width of platform shall be 900mm and if wheel barrow is to be used then 1200mm. Means of access to be provided in the form of ladders, ramps or staircase. Multilevel work platforms or those platforms having passage underneath shall be provided with safety net, screen or canopy at each level for protection from falling objects. Platforms shall be free from concrete, debris or other materials. Platforms shall not extend out of the putlogs and shall be secured and fastened. Decking shall be made non-skidding.
Scaffolds under erection shall be tagged **"RED"**, under repair/maintenance/inspection shall be tagged **"YELLOW"** and ready for use shall be tagged **"GREEN"**

Only metal ladders in the construction site and FRP ladders in charged areas shall be allowed. Ladders made from packing materials shall not be used. Ladders shall be securely fixed at bottom, top and long ladders at middle points too at an interval not more than 2400mm and must have a landing at every 6m. Inclination angle should be approximately 1:4 (X:Y) or 75deg. Ladder must extend at least 1m above the platform/access area. Gap between two rungs shall not exceed 300mm. Portable ladder should not be more than 4m in length. Minimum width of the ladder shall not be less than 300mm.

Use of Mobile aluminium scaffold is preferably advisable for erection of transformers/reactors.

r. Illumination

The sub-contractor shall ensure that the areas such as work stations, buildings, batching plants, passages/roads, stores, rest areas, power sources, staircases etc. are illuminated sufficiently to make safe work conditions at site and shall not be less than the relevant IS standards. Excavations/ below ground level structures near passages/roads shall also be sufficiently illuminated.

s. Safety banners/posters, caution boards

Sub-contractors shall display boards and banners in sufficient quantity having safety signs, slogans, important messages, pictures, cautions at prominent locations to promote safety and spread awareness for important precautions such as "Deep Excavation Ahead", Speed Limit", "Charged Area", "Do not operate", "Hard hat area", "No smoking Zone" etc. Boards containing messages of Emergency contacts, First aid facility, rates of minimum wages, working hours, rest day etc. should be displayed at specific areas.

t. Waste management and disposal

Sub-contractor shall make suitable and effective arrangement to remove waste material from site on regular basis and store them in an identified and safe location. Disposal of wastes shall also be done as per manufacturer's instructions or as per the guidelines laid by legal authorities. Re-bars, Cement bags, packing material (wooden/metal/plastic/paper), paint, oil, grease, cables (armour, sheathing, insulation), civil debris, metal chips, GI sheet scraps, batteries etc. are the common waste materials. Sub-contractor

shall arrange disposal of the hazardous wastes/materials in conformance to the legal and contractual requirements only.

u. Inspection of PPEs, T&Ps, Machineries and lifting appliances

All the PPEs, T&P and lifting appliances purchased newly by sub-contractors shall have test certificates which shall be submitted to BHEL office periodically or on demand. There shall be at least monthly joint inspection schedule for inspection of healthiness of all the PPEs, T&Ps and lifting appliances. All the lifting appliances shall be tested and examined by a competent person before taking into use for the first time or after it has undergone any alterations or repairs liable to affect its strength or stability

and also once at least in every twelve months. To confirm quality of the PPEs as per the relevant IS codes, BHEL may ask sub-contractors to get any or all types of PPEs tested through NABL approved lab as per relevant IS codes. At any stage, the 100% cost of such tests shall be in the scope of respective sub-contractors.

v. Cable Laying

Sub-contractor shall ensure cable trenches free from water, mud, debris, snakes, Scorpios, lizards before start of the work in trenches. Cable drum rollers shall be used to pull cables out of drums to avoid twisting of cables. Hand gloves, Safety shoes/gum boots, reflective jackets, safety helmets shall be provided to the workers. Cable laying area shall be well illuminated.

w. Fire Protection

Every sub-contractor has to maintain their working area, store and office area free from bushes. Stacking of flammable materials like wood, paper, plastic, paint, oil, grease, fuel, cotton, gases etc. at isolated place disconnected from other storage and office areas. Adequate arrangements of firefighting means like suitable extinguishers, fire/water buckets, water tanks, sand dunes etc. shall be made by the agency depending upon the fire capacity assessed or as per MSDS. Fire drills and trainings on how to operate fire extinguishers and how to react in case of fire breakouts shall be the part of regular training program. Guards and store persons must be a regular participant of such training programs. A list of trained firefighting persons and periodicity of such training programs shall be submitted to BHEL by every agency and same to be adhered. Sufficient number of fire extinguishers with suitable class shall be placed at such locations where there can be fire hazard like stores, pantry, office, DG set, electrical distribution panels etc.

x. Fencing of exposed rotating parts

Exposed rotating parts poses great threat to the person in vicinity. Such parts need to be fenced/covered. Guards are mandatory of grinders, abrasive cutters. Flywheels of the engines of heavy machines, Diesel engines, DG sets need to be covered. Electric winch machines, pulleys, chains, shafts, exhaust fans at reachable height, table fans, need to be caged/fenced. Such fencing/guard shall not be removed while machinery is in operation.

y. Emergency preparedness response plan and periodic mock drills.

Sub-contractor shall comply JSA (Job Safety Analysis) and arrange to mitigate the effects of identified possible hazards. He shall also define following in response to emergency preparedness:
An emergency assembly point and put a board of the same with information to all in induction training.
Have facility of ambulance or tie-up with nearest hospital for service in minimum possible time (Max-30min) if there is not ambulance inside the premises.
Ensure availability of emergency vehicle with driver all the time at site during work.
Conduct mock-drills on possible risks like electrocution, fall from height, fire, heat stroke etc., record responses and take photographs to submit in BHEL office. Stretchers availability in emergency vehicle or at work place should be well accessible. Provide fire extinguishers of right type at right place in right quantity with information to all. Display emergency contact nos. to various risk locations and at office, service building or at major work locations. Provide first aid training by doctors for and display names of such trained first aiders and fire fighters. Rescue kit with trained staff or man lift or both to rescue a man hanging by safety belt at height. Provide running water tap near chemical storage and handling points. Agencies shall follow emergency response plan prepared by BHEL in each area of work, store and office.

z. Safety reports & Reporting of accidents

BHEL will provide ''formats and checklists'' for the purpose of records/documents pertaining to the compliance of aforesaid clauses. Agencies shall be responsible for strict adherence and compliance for timely generation and fill-up of the checklists and reports. These shall be submitted on weekly and monthly basis as specified in the formats.

Agency shall also promote such an environment that the near misses, incidents and accidents are reported by every person, whosoever witnesses them. These shall help in analysing the trend and taking measures in reducing/stopping the accidents/incidents. Initial reporting can be in any form-by call, SMS, WhatsApp, e-mail, letter etc.
Major and fatal accidents or high potential incidents shall be investigated for route cause and outcomes shall be immediately implemented to check recurrences.

6. General conditions and penalty clauses

Following are the general conditions:

PPEs shall not only bear the ISI mark but also be conforming to the required standards, 100% compliance of the PPEs is mandatory.
Over speeding of vehicles shall attract penalty/notice and recurrence will attract debarring from entry into project premises.
Hiding of facts like incidents, accidents, fake/forged reports/certificates shall also attract penalty/ notice or both. Only approved third party agencies shall be allowed to inspect the machines, T&Ps. Reports shall directly be sent to BHEL/customers by the third parties.
Insurance and TPIs to be renewed before expiry. Machines, T&Ps shall not be allowed to work if renewal delayed. Continuity of WC policy to be maintained religiously by the respective agencies.

Agency shall submit the status report of his labour license, BOCW registration, WC Policy, insurance & TPI validity on monthly basis with list of machineries and T&Ps

Sub-contractors shall also maintain a buffer stock of all the PPEs in at least 20% excess to the present strength of the work force.

If construction power is not drawn as per the guidelines laid in clause no. 5(m), given above, BHEL may take-up this work at the risk and cost of the agency and/or may withhold a sum of min. Rs. 50,000/- (Rs. Fifty Thousand) or more as the site in-charge deems fit till the system is aligned as per aforesaid requirement.

Agencies shall be responsible for the compliance of the above requirements. Failure in one or more clauses/area shall attract a notice or monitory penalty or a combination of above.

Monitory penalty will be

- Rs. 1000/- per person/incident per day for non-conformity in above areas.
- A Major/severe accident shall attract a penalty of Rs. 2,00,000/- per head
- Fatality or permanent disability with total loss of earning capacity, if any, will attract a penalty of Rs. 5,00,000/- (Rs. Five Lakh).
- Further fatality/permanent disability shall attract double the last penalty imposed on the agency.
- Above penalties are exclusive of medical expenses of the victim or compensation to the family through insurance policy (WC Policy or group insurance).
- **Penalties imposed by customer shall be fully transferable to the sub-contractor. In the event of above cases, penalties shall be imposed whichever will be higher.**
- Evaluation of agency's performance on HSE compliance shall be done as per BHEL guide lines/system.

Revision History

Revision Date	Revision No.	Old Text	New Text	Reason	Revised by (with sign)
03.05.2019	00	N/A	Full Document	New Release	
12.10.2021	01	Nil	Attend HSE familiarization program at TBG-HQ with his site management team. This will be a half day long awareness session on HSE requirements and compliances which the agency is supposed to fulfil during contract execution at site. The session shall be taken by TBG HSE department on intimation by TBSM. (at page no. 5)	For better understanding of HSE requirements to agency. (HSE Review meeting dated 23.08.2021)	
12.10.2021	01	Edition	Inclusion of penalty provisions in case of non-deployment of safety person(page-8)	Introduction of HSEP-14	

-:End of Document:-

INDEX

S.No.	Description	Page No.
A.0	**GENERAL INSTRUCTIONS TO TENDERERS**	**04 - 30**
A.1.0	Procedure for submission of Tenders	5
A.2.0	Procedure for evaluation of Price Bids	5
A.12.0	Data to be enclosed	7
A.13.0	Earnest Money Deposit	9
A.14.0	Authorization and Attestation	9
A.15.0	Validity of Offer	10
A.16.0	Execution of Contract	10
A.17.0	Security Deposit	10
A.19.0	Rejection of Tender and Other conditions	12
Annex-A	Details of work executed/Being Executed	15
Annex-B	Proposed Manpower	16
Annex-C	Status of Tools, Plants and Instruments	17
Annex-D	Analysis of Unit Rate	18
Annex-E	Declaration sheet	19
Annex-F	Checklist and Schedule of General Particulars	20
Annex-G	Proforma for Contract Agreement	21
Annex-H	Proforma for BG for Security Deposit	23
Annex-I	Proforma for Performance Guarantee	25
Annex-J	Revised offer in lieu of Deviation withdrawal	28
Annex-K	List of Laboratory Test Equipments	29
Annex-L	BG confirmation letter from Banker	30

B.0	**GENERAL TERMS AND CONDITIONS**	**31-48**
B.1.0	Definitions	32
B.2.0	Law governing the contract and Court Jurisdiction	34
B.3.0	Issue of Notice	34
B.4.0	Use of Land	34
B.5.0	Commencement of Work	35
B.6.0	Measurement of work and Mode of Payment	35
B.7.0	Rights of BHEL	37
B.8.0	Responsibility of Contractor in respect of local laws	38
B.9.0	Responsibility of Contractor in respect of Safety	42
B.10.0	Consequences of Cancellation	45
B.11.0	Insurance	46
B.12.0	Strikes and Lockouts	46
B.13.0	Force Majeure	47
B.14.0	Guarantee	47
B.15.0	Arbitration	47
C.0	**SPECIAL CONDITIONS OF CONTRACT**	**49- 69**
C.1.0	Instructions to Tenderers	50
C.2.0	Performance Bond	50
C.3.0	Site Drainage	51
C.4.0	Execution of Work	51
C.5.0	Inspection and Stage approval of work	51
C.6.0	Completion of work	52
C.7.0	Uncovering and Adjustment of Errors	52
C.8.0	Discrepancies and Adjustment of Errors	52
C.9.0	Deviations	54

C.10.0	Valuation of Deviations	54
C.11.0	Record and Measurement	55
C.12.0	Contractor's Supervision	56
C.13.0	Labour and Supervision Staff	57
C.14.0	Plant and Equipment at Site	58
C.15.0	Compliance to Regulations and Bye laws	58
C.16.0	Materials obtained from Excavation	58
C.17.0	Treasure, Trove, Fossils etc.	59
C.18.0	Protection and Security	59
C.19.0	Site office and Stores	59
C.20.0	Power and Water	59
C.21.0	Temporary Workshop, Stores, consumables	60
C.22.0	Materials	60
C.23.0	General	62
C.24.0	Delay and Extension of Time	63
C.25.0	Compensation/penalty for Delay	63
C.26.0	Price Variation	63
C.27.0	Over run Charges	65
C.28.0	Octroi and other Duties	65
C.29.0	Terms of Payment	65
C.30.0	Cement and Steel	67
C.31.0	Quality Assurance	68
C.32.0	Clearance of site and Repairs	68
C.33.0	Protection of Work	69
C.34.0	Record of Materials Consumed	69
C.35.0	Secured Advance	69

SECTION- A

GENERAL INSTRUCTIONS TO TENDERERS

SECTION - A

GENERAL INSTRUCTIONS & INFORMATION FOR TENDERER

A.1.0: PROCEDURE FOR SUBMISSION OF TENDERS

Bidder **has** to submit offer directly through E-PROCURMENT MODE. Bidder may visit **https://eprocurebhel.co.in**

Procedure for Submission of Tenders through e tendering : The tender is also floated online through our E-Procurement Site https://eprocurebhel.co.in . The bidder may respond by submitting their offer online in our e-Procurement platform at https://eprocurebhel.co.in
Offers are invited in two-parts only.
Documents Comprising the e-Tender
The tender shall be submitted online EXCEPT EMD (which shall be submitted in physical form (as described in NIT cl. No.1) above as mentioned below:

a. Technical Bid (Un priced Tender)
All Technical details (eg. Eligibility Criteria requested (as mentioned below)) should be attached in e-tendering module, failing which the tender stands invalid & may be REJECTED. Bidders shall furnish the following information along with technical tender (preferably in pdf format):
i. Earnest money Deposit (EMD) furnished in accordance with NIT Clause 4.0
ii. Technical Bid (without indicating any prices).

b. Price Bid:
i. Prices are to be quoted in the **attached Price Bid format online on e-tender portal**.
ii. The price should be quoted for the accounting unit indicated in the e-tender document.
iii. Note: It is the responsibility of tenderer to go through the Tender document to ensure furnishing all required documents in addition to above, if any. Any deviation would result in REJECTION of tender and would not be considered at a later stage at any cost by BHEL.
iv. A person signing (manually or digitally) the tender form or any documents forming part of the contract on behalf of another shall be deemed to warrantee that he has authority to bind such other persons and if, on enquiry, it appears that the persons so signing had no authority to do so, the purchaser may, without prejudice to other civil and criminal remedies, cancel the contract and hold the signatory liable for all cost and damages.
v. A tender, which does not fulfil any of the above requirements and/or gives evasive information/reply against any such requirement, shall be liable to be ignored and rejected.

c. Uploading of the price bid in prequalification bid or technical bid may **RESULT IN REJECTION** of the tender.
d. Tenders shall be uploaded with all relevant PDF/zip format. The relevant tender documents should be uploaded by an authorized person having Class 3- SHA2- 2048 BIT- SIGNING & ENCRYPTION digital signature certificate (DSC).

A.2.0: PROCEDURE FOR EVALUATION OF PRICE BIDS:

The following shall be Evaluation *Procedure* of the prices offered: -

Payment terms, Completion Schedule and other contractual terms & conditions shall be as per Tender Specifications.

No deviations are acceptable. Offers with deviations are likely to be rejected.

However, if the bidder insists on any technical or commercial deviations from the specifications and / or tender conditions, **the price implication, if any, of withdrawing the deviations must be submitted along with the price bid in a separate sealed envelope** super-scribed "Price implication for withdrawal of deviations". No price implication for withdrawal of deviation shall be accepted at a later date, after opening of technical bid.

The offers of new vendors may not be considered even after opening of price bid if the vendor is not found suitable on final assessment.

A.3.0 This tender specification as a whole, furnishing all the details and other documents as required in the following pages, shall be duly signed & sent in a sealed cover superscribing the name of work as given in the tender enquiry.

A.4.0 The tender shall be addressed to: OFFICER INVITING THE TENDER AS INDICATED IN THE TENDER ENQUIRY.

A.5.0 DELETED

A.6.0 Tenders shall be opened by the concerned officers of BHEL at the time, date and venue as specified in the tender notice.

A.7.0 The tenderer shall closely pursue all the clauses, specifications and drawings indicated in the Tender Documents before quoting. Should the tenderer have any doubt about the meaning of any portion of the Tender Specifications or find discrepancies/omission in the drawings or the tender documents issued are incomplete or shall require clarification on any of the technical aspect, scope of work etc. he shall at once contact the authority inviting the tender for clarification before the submission of the tender.

A.8.0 Before tendering, the tenderer are advised to inspect the site of work & the environments and be acquainted with the actual working and other prevalent conditions, facilities available, position of material and labour. No claim will be entertained later on the grounds of lack of knowledge.

A.9.0 Tenderer must fill up all the schedules and furnish all the required information as per the instructions given in various sections of the tender specification. Each and every page of the Tender Specification must be SIGNED AND SUBMITTED ALONG WITH THE OFFER by the Tenderer in token of complete acceptance thereof. The information furnished shall be complete by itself.

A.10.0 The tenderer shall quote the rates in English Language and international numerals. Total price offered should be entered in figures as well as in words. In case of difference in price between words & figures, the price in words will be treated as valid price. For the purpose of the tender, the metric system of units shall be used.

A.11.0 All entries in the tender shall either be typed or be written in ink. Erasers and overwriting are not permitted and may render such tender liable to summary rejection. All cancellations and insertions shall be duly attested by the tenderer.

A.12.0 **DATA TO BE ENCLOSED:**

A.12.1 An attested copy of the Power of Attorney, in case the tender is signed by an individual other than the sole proprietor, shall be attached.

A.12.2 IN CASE OF INDIVIDUAL: His full name, experience, address and nature of business.

OR

IN CASE OF PARTNERSHIP FIRMS: The names of all the partners with address and their experience. A copy of the partnership deed/instrument of partnership duly certified by the Notary shall be enclosed.

OR

IN CASE OF COMPANIES: Date & place of registration including date of commencement certificate in case of Public Companies and the nature of business carried on by the company. Certified copies of Memorandum and Articles of Association are also to be furnished. Also indicate names, addresses and experience of the Directors.

A.12.3 Three years financial turn over (certified), present commitments with all orders in hand, value of total order, value completed, and balance with completion dates as per ANNEXURE-A.

A.12.4 **ORGANIZATION CHART & METHODS STATEMENT:**

The organization pattern and the manpower that are totally available with him & that will be deployed by the tenderer for this work in the form of month wise and category wise deployment plan duly indicating the number of Engineers, Supervisors, Skilled and Unskilled Workers etc. as per proforma at ANNEXURE-B shall be submitted. Work schedule (detail bar chart) and a methods statement showing how the contractor proposes to mobilise (considering the difficulties in work that may be encountered) and complete the jobs giving an idea of extent of proposed mechanisation for the execution of the jobs shall also be submitted along with ANNEXURE-B.

A.12.5 A list of machines, tools and tackles that the tenderer is having and those that will be deployed on this job giving proof of ownership or any tie-up of equipment as per proforma enclosed at ANNEXURE-C.

A.12.6 Analysis of unit rate quoted as per proforma enclosed at ANNEXRE-D.

A.12.7 Declaration sheet as per proforma enclosed at ANNEXURE-E.

A.12.8 Check-list as per proforma enclosed at (ANNEXURE-F).

A.12.9 Certificate from Schedule Bank to prove his financial capacity to undertake the work or Solvency Certificate from the concerned Government Authority.

A.12.10 A certificate of Income Tax / Sales Tax verification from the appropriate authority in the forms prescribed duly indicating annual turnover. These certificates shall be valid for one year from the date of issue or for the period prescribed therein for all tenders submitted during the period.

A.12.11 In addition to the above, the particulars required elsewhere in the tender documents.

A.12.12 NOTE: In terms of clauses A.12.1 to A.12.11 above, all the data required to be enclosed with the tender need to be furnished neatly typed, signed & stamped in the given formats only (in the form of separate sheets) failing which the tender may be considered as incomplete and is liable for rejection. Documentary proof wherever necessary also need to be enclosed.

A.13.0 EARNEST MONEY DEPOSIT:

Every tender must be accompanied by the prescribed amount of Earnest Money Deposit (EMD) mentioned in NIT.

1. Mode of EMD deposit:

EMD can be submitted in any one of the following modes:

i) Cash deposit as permissible under the extant Income Tax Act (before tender opening),

ii) Electronic Fund Transfer credited in BHEL account (before tender opening). Details of BHEL account mentioned in tender document.

iii) Banker's cheque/Pay order/Demand Draft, in favour of `BHEL' and payable at New Delhi (Along with offer)

iv) Fixed Deposit Receipt (FDR) issued by schedule Banks/Public Finance Institutions as defined in the companies ACT (FDR should be in the name of the contractor, a/c BHEL

v) In case total EMD amount is more than Rs. 2 Lakh, the amount in excess of Rs. 2 lakh may be accepted in the form of Bank Guarantee from scheduled bank. The Bank Guarantee in such cases shall be valid for at least six months.

No other form of EMD remittance shall be acceptable to BHEL.

2. Forfeiture of EMD

EMD by the bidder will be forfeited as per NIT conditions, if

i) After opening the tender and within the offer validity period, the bidder revokes his tender or makes any modification in his tender which is not acceptable to BHEL.

ii) The contractor fails to deposit the required Security deposit or commence the work within the period as per LOI/contract.

3. EMD by the tenderer shall be withheld in case any action on the tenderer is envisaged under the provision of extant “Guidelines on Suspension of business dealing with supplier/contractors” and forfeited/ released based on the action as determined under these guidelines.

4. In the case of unsuccessful bidders, the Earnest Money will be refunded to them within a reasonable time after award of work.

5. EMD shall not carry any interest.

6. EMD of successful bidder shall be retained as part of Security Deposit.

7. Bidders may please note that “One Time EMD” provision stands deleted. Hence, bidders who have deposited Rs. 2 Lakh as `One Time EMD' with BHEL are also required to submit the requisite amount of EMD.

8. **No MSE benefits shall be given to MSEs bidder for WORKS CONTRACT. Please refer clause no. P (facilities provided to MSEs) for detail.**

A.14.0 AUTHORIZATION AND ATTESTATION:

Tenders shall be signed by persons duly authorized/empowered to do so. Certified copies of such authority & relevant documents shall be submitted along with the tenders.

A.15.0 **VALIDITY OF OFFER:**

THE OFFER SHALL BE KEPT OPEN FOR ACCEPTANCE FOR A MINIMUM PERIOD OF **FOUR MONTHS** FROM THE DATE OF OPENING OF TENDERS. In case BHEL calls for negotiations, such negotiations shall not amount to cancellation or withdrawal of the original offer which shall be binding on the tenderer.

A.16.0 **EXECUTION OF CONTRACT:**

The successful tenderer's responsibility under this contract commences from the date of issue of the Letter of Intent by BHEL. The successful tenderer shall be required to execute an agreement in the prescribed form as per ANNEXURE-G with BHEL within a reasonable time after the acceptance of his tender and in any case before submitting the first bill for payment. The expenses for completion, stamping and registration of the agreement with prescribed authority if necessary, shall be borne by the contractor.

A.17.0 **SECURITY DEPOSIT:**

Security Deposit means the security provided by the Contractor towards fulfilment of any obligations in terms of the provision of the contract.

1. Upon acceptance of Tender, the successful Tenderer should deposit the required amount of Security Deposit for satisfactory completion of work. **The total amount of Security Deposit will be 5% of the Contract Value. EMD of the successful tenderer shall be converted and adjusted towards the required amount of Security Deposit.**

2. Mode of Security deposit:

The security Deposit should be furnished **before start of the work** by the contractor.

"Bidders agrees to submit performance security required for execution of the contract within the time period mentioned. In case of delay in submission of Performance security, enhanced performance security which would include interest (SBI rate + 6%) for the delayed period, shall be submitted by the bidder. Further, if performance security is not submitted till such time the first bill becomes due, the amount of performance security due shall be recovered as per terms defined in NIT / Contract, from the bills along with due interest".

The balance amount to make up the required Security Deposit of 5% of the contract Value may be furnished in any of the following forms:

i) Cash (as permissible under the extant Income Tax Act)

ii) Local cheques of scheduled banks (subject to realization) / Pay Order / Demand Draft / Electronic Fund Transfer, in favour of BHEL.

iii) Bank Guarantee from Scheduled Banks / Public Financial Institutions as defined in the Companies Act. The Bank Guarantee format for Security Deposit is enclosed.

iv) Fixed Deposit Receipt issued by Scheduled Banks / Public Financial Institutions as defined in the Companies Act. The FDR should be in the name of the contractor, A/C BHEL and duly discharged on the back.

v) Securities available from Indian Post Offices such as National Savings Certificates, Kisan Vikas Patras etc. (Certificates should be held in the name of Contractor furnishing the security and duly endorsed/hypothecated/pledged, as applicable, in favour of BHEL and duly discharged on the back).

(NOTE: BHEL will not be liable or responsible in any manner for the collection of interest or renewal of the documents or in any other matter connected therewith)

3. Submission of Security Deposit:

i) At least 50 % of the required Security Deposit, including the EMD, shall be submitted before start of work. Balance of the Security Deposit can be submitted by way of deduction of 10% of the gross amount progressively from each running bills of the contractor till the total amount of the required Security Deposit is collected.

ii) If the value of work done at any time exceeds the contract value, the amount of Security Deposit shall be correspondingly enhanced and the additional Security Deposit shall be immediately deposited by the Contractor or it shall be recovered from payment/s due to the Contractor.

iii) The recoveries made from running bills (cash deduction towards balance SD amount) can be released against submission of equivalent Bank Guarantee in acceptable form, but only once, before completion of work, at the discretion of BHEL.

4. The BG shall be submitted only through the Banker. Along with the BG, the Bank shall also furnish a letter of confirmation (in the prescribed formats enclosed with general conditions of contract).

5. The validity of the Bank Guarantee furnished towards Security Deposit shall be up to three months more than the period of completion of work as stipulated in the LOI and the same will be kept valid by proper renewal till the completion of the work.

6. BHEL reserves the right of forfeiture of Security Deposit in addition to other claims and penalties in the event of the contractor's failure to fulfil any of the contractual obligations or in the event of termination of contract as per terms and conditions of the contract. BHEL reserves the right to set off the Security Deposit, against any claims of any other contracts with BHEL.

7. Conditions for acceptance of bank guarantees

Contractors are advice to obtain Bank Guarantee preferably from any of the following BHEL consortium banks

Sl. No.	Nationalized Bank	Sl. No.	Public Sector Banks
1	Allahabad bank	20	IDBI
2	Andhra bank		
3	Bank of Baroda		**Foreign bank**
4	Canara Bank		
5	Corporation bank	21	CITI Bank N.A
6	Central bank of India	22	Deutsche Bank AG
7	Indian Bank	23	The Hongkong and Shanghai Banking Corporation Limited
8	Indian Overseas Bank	24	Standard Chartered Bank
9	Oriental bank of Commerce	25	J P Morgan
10	Punjab National Bank		
11	Punjab & Sindh Bank		**Private bank**
12	State Bank of India	26	Axis Bank
13	State Bank of Hyderabad	27	The Federal Bank Limited
14	Syndicate Bank 28 HDFC		
15	State Bank of Travancore	29	Kotak Mahindra Bank
16	UCO Bank	30	ICICI
17	Union Bank of India	31	Indusind Bank
18	United Bank of India	32	Yes Bank
19	Vijaya Bank		

Bank Guarantees from Banks outside BHEL's consortium shall be as below:

The Bank Guarantees of all Public sector banks can be accepted (in addition to consortium banks)

The Bank Guarantees of Co-operative banks shall not be accepted.

Bank Guarantees of other than consortium bank and public sector bank can be accepted subject to an overall exposure limit (at New Delhi) of Rs. 10 crores for banks with networth of more than Rs. 500 crores as on last balance sheet date and Rs 5 crores for banks with net worth between Rs. 350 to Rs 500 crores (A certificate and copy of latest Balance Sheet to be given by the Bank at the time of submission of Bank Guarantees).

In case of private sector banks a clause to be incorporated in the text of Bank Guarantee that it can be enforceable by being presented at any branch of the bank.

In case of foreign vendors the bank guarantees issued by foreign banks may be confirmed by our consortium bank in India.

In case of Bank Guarantees given by Non-Consortium banks (Private sector or Public sector), the Bank Guarantees are to be enforceable in New Delhi or the town/ city in which the sector office is located.

1. **RETURN OF SECURITY DEPOSIT:**

If the contractor duly performs and completes the work in all respects to the entire satisfaction of BHEL and presents an absolute "No demand certificate", returns properties belonging to BHEL, taken, borrowed or hired by him for carrying out the said works, and furnishes performance bond BG in the prescribed proforma as per ANNEXURE-J, Security Deposit will be released to the contractor after deducting all costs, expenses and other amounts that are to be paid to BHEL under this contract or other contracts entered into with the contractor. It may be noted that in no case the Security Deposit shall be refunded/released prior to passing of final bill.

A.18.0 No interest shall be payable by BHEL on EMD, Security Deposit or on any money due to the contractor.

A.19.0 **REJECTION OF TENDER & OTHER CONDITIONS:**

A.19.1 The decision of acceptance of tender will rest with BHEL which does not bind itself to accept the lowest tender or any tender and reserves to itself full rights for the following without assigning any reasons whatsoever:

(a) To reject any or all of the tenders.
(b) To split up the work amongst two or more Tenderer.
(c) To award the work in part.
(d) In either of the contingencies stated in (b) and (c) above to modify the time for completion suitably.

A.19.2 Conditional and unwitnessed tenders, tenders containing absurd or unworkable rates & amounts, tenders which are incomplete or otherwise considered defective and tenders not in accordance with the tender conditions, specifications etc. are liable to be rejected.

A.19.3 In case of any adverse information is received concerning performance, capability or conduct of the tenderer after issue of tender enquiry, BHEL reserves the right to reject the offer at any stage as deemed fit.

A.19.4 Offers with inadequate Tools & Plants, Manpower Deployment Plan, Method Statement are liable for rejection.

A.19.5 In case the present commitments of the tenderer is such that award of further work is likely to affect performance in the work under this tender, its offer is liable for rejection.

A.19.6 Offers from tenderer are liable for rejection if the tenderer is not found suitable after preliminary/ final assessment by BHEL.

A.19.7 If a tenderer expires after the submission of his tender or after the acceptance of his tender, BHEL may at its discretion, cancel such tender. If a partner of a firm expires after the submission of the tender or after the acceptance of the tender, BHEL may cancel such tender at its discretion unless the firm retains its character.

A.19.8 BHEL will not be bound by any Power of Attorney granted by the tenderer or by changes in the composition of the firm made subsequent to the execution of the contract. BHEL may, however, recognise such Power of Attorney and changes after obtaining proper legal advice, the cost of which will be chargeable to the contractor concerned.

A.19.9 If the tenderer deliberately gives wrong information in his tender, BHEL reserves the right to reject such tender at any stage or to cancel the contract, if awarded, and forfeit the Earnest Money/Security Deposit/any other moneys due.

A.19.10 Canvassing in any form in connection with the tender is strictly prohibited and the tenders submitted by the contractors who resorts to canvassing are liable to be rejected.

A.19.11 Should a tenderer or contractor or in the case of a firm or company of contractors/ one or more of its Partners/ Share holders/ Directors have a relation or relations employed in BHEL, the authority inviting tender shall be informed to the fact along with the offer, failing this, BHEL may, at its sole discretion reject the tender or cancel the contract and forfeit the Earnest Money/ Security Deposit.

A.19.12 The successful tenderer should not sub-contract the part or complete work detailed in the tender specifications without written permission of BHEL. The tenderer is solely responsible to BHEL for the work awarded to him.

A.19.13 NO DEVIATIONS ARE ACCEPTABLE. OFFERS WITH DEVIATIONS ARE LIKELY TO BE REJECTED. HOWEVER, IF THE BIDDER INSISTS ON ANY TECHNICAL OR COMMERCIAL DEVIATIONS FROM THE SPECIFICATIONS AND / OR TENDER CONDITIONS, **THE PRICE IMPLICATION, IF ANY, OF WITHDRAWING THE DEVIATIONS MUST BE SUBMITTED ALONG WITH THE PRICE BID IN A SEPARATE SEALED ENVELOPE** SUPER-SCRIBED "PRICE IMPLICATION FOR WITHDRAWAL OF DEVIATIONS". NO PRICE IMPLICATION FOR WITHDRAWAL OF DEVIATION SHALL BE ACCEPTED AT A LATER DATE, AFTER OPENING OF TECHNICAL BID.

ANNEXURE - A

DETAILS OF WORK EXECUTED/BEING EXECUTED

A) WORK EXECUTED

Sl. No.	Financial Year	Customer	Description of work	Total order value	Remarks

B) WORK BEING EXECUTED

Sl. No.	Customer	Description of work	Total Value	Value of the portion completed	Actual start date	Expected completion date	Remarks

(SIGNATURE OF TENDERER)
WITH STAMP

ANNEXURE - B

(A) **PROPOSED MANPOWER (ENGINEERS/ SUPERVISORS) RESOURCES FOR EXECUTION OF WORK**

Sl. No.	Name of the staff	Qualification	Experience in years	Remarks

(B) **MONTH WISE MANPOWER DEPLOYMENT PLAN**

Sl. No.	Category	Indicate No. of persons to be deployed in each month								
		1st	2nd	3rd	4th	5th	6th	7th	8th	and so on

(C) **Total man days planned to be deployed for the work ..... Man days**

(SIGNATURE OF TENDERER)
WITH STAMP

ANNEXURE - C

(A) STATUS OF TOOLS, PLANTS & INSTRUMENTS

Sl. No.	Name of Equipment	Quantity owned	Registration No.	Documents enclosed for proof of Ownership / tie-up	Present Location	Quantity proposed to be deployed for this job

B) MONTH WISE TOOLS, PLANTS & INSTRUMENTS DEPLOYMENT PLAN

Sl. No.	Description of Tools, Plants & Instruments	Indicate Nos. to be deployed in each month							
		1st	2nd	3rd	4th	5th	6th	7th	and so on

(SIGNATURE OF TENDERER)
WITH STAMP

ANNEXURE - D

ANALYSIS OF UNIT RATE

Sl. No.	Description	Percentage of the unit rate	Remarks
01.	Salary and wages for staff and works		
02.	Materials a) ..... b) ..... c) ..... d)		
03.	Depreciation and maintenance for Tools and Plants		
04.	Depreciation and maintenance for other items		
05.	Establishment and administrative expenses of site		
06.	Overheads		
07.	Profit		

(SIGNATURE OF TENDERER)
WITH STAMP

ANNEXURE - E

DECLARATION SHEET

I ..... hereby certify that all the information and data furnished by me with regard to this Tender Specification No..... are true and complete to the best of my knowledge. I have gone through the specification, conditions and stipulations in detail and agree to comply with the requirements and intent of specifications.

I further certify that I am the duly authorised representative of the under mentioned tenderer and a valid power of attorney to this effect is also enclosed.

TENDERER'S NAME AND ADDRESS

AUTHORISED REPRESENTATIVE'S SIGNATURE WITH NAME AND ADDRESS

ANNEXURE - F

CHECKLIST & SCHEDULE OF GENERAL PARTICULARS

NOTE: Tenderers are requested to fill in the following details and no column should be left blank.

1.	Name & Address of the Tenderer	:	
2.	Phone/Fax No. (Office)	:	
3.	email ID	:	
4.	Name & designation of the official of the tenderer to whom all the references shall be made	:	
5.	Tenderer's Proposal No. & date	:	
6.	Whether EMD submitted (by cash/ Bank Guarantee/Bank Draft)	:	By.....
7.	Validity of offer/rates quoted for six months from the date of opening of tender	:	Yes/No
8.	Attested copy of power of attorney as per Clause-A.12.1	:	Yes/No
9.	Solvency Certificate submitted as per Clause-A.12.9	:	Yes/No
10.	Income Tax/Sales Tax Certificate submitted as per Clause-A.12.10	:	Yes/No
11.	Details of work executed/being executed as per Annexure-A	:	Yes/No
12.	Month wise & Category wise manpower deployment plan as per Annexure-B	:	Yes/No
13.	Status of Tools, Plants and Instruments & their month wise deployment plan as per Annexure-C	:	Yes/No
14.	Analysis of unit rate quoted as per Annexure-D	:	Yes/No
15.	Declaration sheet as per Annexure-E	:	Yes/No
16.	Request for registration (for new tenderers) submitted	:	Yes/No

Date ..... (SIGNATURE OF TENDERER)
WITH STAMP

WITNESS : (Signature with full particulars)

1.

2.

ANNEXURE - G

PROFORMA FOR C O N T R A C T A G R E E M E N T

CONTRACT NO. :
LETTER OF INTENT NO. :
WORK ORDER NO. :

1. The Contract Agreement entered into the day of ....., 20... (..... day of .....two thousand and……. ....) at New Delhi, between M/S BHARAT HEAVY ELECTRICALS LIMITED, TRANSMISSION BUSINESS GROUP, New Delhi , having it's Registered Office at BHEL House, Siri Fort, New Delhi - 110 049 (hereinafter called the FIRST PARTY which expression shall include their executors, administrators, successors and permitted assigns)

AND

M/S ..... (hereinafter called the SECOND PARTY which expression shall include their executors, administrators, successors and permitted assigns).

2. And whereas the FIRST PARTY called for the offer for the work of..... as per approved specifications, drawings and quality plan at ..... as per Tender Specification No..... , dated .....

3. Whereas the SECOND PARTY submitted their offer No. ..... dated ..... against above.

4. Whereas the FIRST PARTY has accepted the offer referred to above & issued Letter of Intent No....., dt..... and also detailed Work Order No...., dt .....

5. Whereas the SECOND PARTY has agreed to work as Sub-Contractor of the FIRST PARTY on the conditions specified in the Tender Specifications at a contract price of Rs..... (Rupees.....) at .....

6. Now, therefore it is hereby mutually agreed to by and between the parties hereto as under :

   a) The SECOND PARTY shall execute the works of ..... at ..... on the conditions specified in Tender Specifications of FIRST PARTY and Letter of Intent referred to herein before at a total contract price of Rs..... (Rupees .....)

   b) That the SECOND PARTY shall organise all activities and mobilisation of facilities so that the work specified herein before is completed by .....as per the time bound programme mentioned in the Tender Specifications.

c) That all disputes arising out of or relating to this agreement shall be referred to the sole Arbitrator as per arbitration clause mentioned in the Tender Specifications. The Arbitrator from time to time with the consent of the parties enlarge the time for making and publishing award without reference to the court for the purpose.

d) That the jurisdiction in all suits or claims arising out of this agreement shall be of New Delhi Courts only.

e) The Following documents shall form part of this agreement: -

i)
ii)
iii)
iv)
v)
vi)

7. Deviation Limit : The contract value is subject to deviations depending upon the actual requirement within plus or minus 30%. Quantities of individual items may vary to any extent or may get deleted.

8. Terms of Payment : The terms of payment applicable to this contract shall be those covered under Point No.... of Work Order dt. ..... and as per Tender Specifications.

9. Abandoning the work : In the event of the SECOND PARTY abandoning the work, FIRST PARTY reserves the right to get the unfinished work done at the risk and cost of the SECOND PARTY.

10. All other terms and conditions shall be as stipulated in the Tender Documents.

11. This contract agreement consists.... pages.

IT WITNESS WHEREOF, the parties have signed this agreement on the date, month and year first above written in presence of

For and on Behalf of
(FIRST PARTY)

WITNESS (WITH ADDRESS)

For and on Behalf of
(SECOND PARTY)

1.
2.

ANNEXURE - H

PROFORMA FOR BANK GUARANTEE (FOR SECURITY DEPOSIT)

1. In consideration of the Bharat Heavy Electricals Limited, having its Registered Office at BHEL House, Siri Fort, New Delhi-110 049 through its Unit/Division at Industry Sector-TBG, New Delhi hereinafter called BHEL, having agreed to exempt..... (hereinafter called "the said contractor(s)") from the demand, under the terms and conditions of the LOI/WO, dated ... made between BHEL and M/s..... for the work ..... of (Name of work) (hereinafter called "the said Agreement") of Security Deposit / mobilisation advance for the due fulfilment by the said contractor(s) of the terms and conditions contained in the said Agreement, on production of Bank Guarantee for Rs.... (Rupees..... only). We, ... (indicate the name of the Bank) (hereinafter referred to as "Bank") at the request of the contractor(s) do hereby undertake to pay to BHEL an amount not exceeding Rs..... against any loss or damage caused to or suffered or would be caused to or suffered by BHEL, by reason of a breach by the said contractor(s), of any of the terms of conditions contained in the said agreement.

2. We, ... (indicate the name of the Bank) do hereby undertake to pay the amounts due and payable under this guarantee without any demur, merely on a demand from BHEL, stating that the amount claimed is due by way of loss or damage caused to or would be caused to or suffered by BHEL by reason of breach by the said contractor(s) of any of the terms or condition(s) failure to perform the said agreement or by reason of the contractor(s) failure to perform the said agreement. Any such demand made on the Bank shall be conclusive as regards the amount due and payable by Bank under this guarantee. However, our liability under this guarantee shall be restricted to an amount not exceeding Rs.....

3. We, ... (Indicate the name of the Bank) undertake to pay BHEL any money so demanded not withstanding any dispute or disputes raised by the Contractor(s) in any suit or proceeding pending before any court or Tribunal relating there to, our liability under these presents being absolute and unequivocal. The payment so made by us under this bond shall be a valid discharge of our liability for payment there under and the contractor(s) shall have no claim against us for making such payment.

4. We, ...(indicate the name of the Bank) further agree that the guarantee herein after contained shall remain in full force and effect during the period that would be taken for the performance of the said agreement & that it shall continue to be enforceable till all the dues of BHEL under or by virtue of the

said agreement have been fully paid and its claims satisfied or discharged or till BHEL certifies that the terms and conditions of the said agreement have been fully and properly carried out by the said contractor(s) & accordingly discharges this guarantee. Unless a demand or claim under this guarantee is made on us in writing on or before..... we shall be discharged from all liability under this guarantee thereafter.

5. We,.....(indicate the name of the Bank) further agree with BHEL that BHEL shall have the fullest liberty without our consent & without affecting in any manner our obligations hereunder to vary any of the terms & conditions of the said agreement or to extend time performance by the said contractor(s) from time to time or to postpone for any time or from time to time any of the powers exercisable by BHEL against the said contractor(s) and to forbear or enforce any of the terms and conditions relating to the said agreement & we shall not be relieved from our liability by reason of any such variation, or extension being granted to the said contractor(s) or for any forbearance, act or omission on the part of BHEL or any indulgence by BHEL to said contractor(s) or by any such matter or thing whatsoever which under the law relating to sureties would, but for this provision, have effected of so relieving us.

6. This guarantee will not be discharged due to the change in the constitution of the Bank or the Contractor(s).

7. We, ...(indicate the name of the Bank) lastly undertake not to revoke this guarantee during its currency except with the previous consent of BHEL in writing.

Dated the ..... Day of .....20...

For .....(indicate the name of the Bank)

WITNESS : 1)

2)

(SIGNATURE OF BANK REPRESENTATIVE WITH SEAL)

NOTE

1. The above format is drawn upon the model form jointly evolved by the Reserve Bank of India, the Indian Banks Association and the Ministry of Finance, Government of India as circulated by Indian Banks Association, Bombay vide their letter No. LA/14-61/808, dated 01.05.1980.

2. As such no deviations are acceptable.

ANNEXURE – I

PROFORMA FOR PERFORMANCE GUARANTEE

(to be used in appropriate value non - judicial stamp paper)

1. This deed of guarantee made this ..... day of ..... 20… by ..... Bank Limited ..... in favour of Bharat Heavy Electricals Limited having their registered office at BHEL House, Siri Fort, New Delhi - 110 049.

2. Whereas M/s ..... (hereinafter called the CONTRACTOR / SELLER have entered into a Contract bearing No. ..... dated..... (hereinafter called the CONTRACT) for supply / civil works /erection, testing and commissioning of M/s Bharat Heavy Electricals Limited (hereinafter called the COMPANY).

3. And whereas the said CONTRACT Inter - alia provides that the CONTRACTOR / SELLER shall pay to the COMPANY a sum of Rs. ..... only towards Performance Guarantee in the form and manner therein specified.

4. And whereas the SELLER / CONTRACTOR have approached ..... Bank Limited (hereinafter referred to as the GUARANTOR) and at their request and in consideration of the arrangement arrived at between the CONTRACTOR and the GUARANTOR, the GUARANTOR has agreed to give the Guarantee as hereinafter mentioned in favour of the COMPANY.

NOW THIS DEED WITNESSES AS FOLLOWS:

5. The GUARANTOR by the hand of Mr. ..... and its lawfully and fully constituted attorney and do hereby guarantee the due and faithful performance of the said CONTRACT and do hereby irrevocably undertake and promise to pay the COMPANY without any demur merely on demand made by them a sum not exceeding Rs. ..... only in case the COMPANY sustains any loss or damage by reason of any breach, default by the CONTRACTOR / SELLER of any of the terms, conditions, stipulations or undertakings or any one of them contained in the said CONTRACT and the tender documents attached hereto and for payment of any moneys payable by the CONTRACTOR / SELLER to the COMPANY under the terms and conditions of the said CONTRACT. The decision of the COMPANY regarding the breach, default, loss, damage and payment shall be conclusive and binding in the GUARANTOR, irrespective of the fact whether the CONTRACTOR / SELLER admits or denies such claims or questions its correctness in any court, tribunal or arbitration proceedings or before any other authority.

6. The COMPANY shall have the fullest liberty without effecting in any way the liability of the GUARANTOR under this guarantee, from time to time to vary any of the terms and conditions of the CONTRACT or extend time by the SELLER / CONTRACTOR or to postpone for any time and from time to time any of the powers exercisable by its against the SELLER / CONTRACTOR and either to enforce or forbear from enforcing any of terms and conditions governing the CONTRACT or securities available to the COMPANY and the GUARANTOR shall not be released from its liability under these presents by any exercise by the COMPANY of the liberty with reference to the matters aforesaid or by reason of time being given to the SELLER or any other forbearance, act or omission on the part of the COMPANY or any indulgence by the COMPANY to the SELLER / CONTRACTOR or of any other matter or thing whatsoever which under the law relating to sureties, would but for this provision have the effect of so releasing the GUARANTOR / CONTRACTOR from its liability under this Guarantee.

7. This Guarantee shall remain in full force and effect and the GUARANTOR shall be liable under the same irrespective of any concession or time being granted by the COMPANY to the CONTRACTOR in or for fulfilling the said CONTRACT and this Guarantee shall remain in full force irrespective of any change in terms and conditions, stipulations or any variations in the terms of CONTRACT irrespective of whether notice of such change and / or variation is given to the GUARANTOR or not and the claim to receive such notice of any change and or variation of the terms / or conditions of the CONTRACT is hereby specially waived by the GUARANTOR.

8. The GUARANTEE herein contained shall not be determined, prejudiced or effected by the liquidation or winding up or insolvency of or change in the constitution of the CONTRACTOR but shall in all respects and for all purposes be binding and operative until all payments or all moneys due or that may hereafter become payable to the COMPANY are paid in respect of any liability or obligation of the CONTRACTOR under the CONTRACT.

9. The GUARANTOR further agree that the Guarantee herein contained shall remain in full force and effect during the period that would be taken for the commencement of the CONTRACT till end of the CONTRACT and its claim satisfied or discharged and till the COMPANY certified that the terms and conditions of the CONTRACT have been fully and properly carried out by the SELLER and accordingly discharges this guarantee, subject, however, that the COMPANY shall have no claim under this Guarantee after ..... months from the date of completion of the Guarantee has been served on the

GUARANTOR before the expiry of the said period in which case the same shall be enforceable against GUARANTOR not withstanding the fact that the same is enforced after expiry of said period.

The GUARANTOR undertake not to revoke this Guarantee during the period it is in force except with the previous consent of the COMPANY in writing and agree that any liquidation or winding up or insolvency or dissolution or any change in the constitution of the SELLER or the GUARANTOR shall not discharge the GUARANTOR's liability here under.

It shall not be necessary for the COMPANY to proceed against the SELLER before proceeding against the GUARANTOR and the Guarantee herein contained shall be enforceable against them not withstanding any security which the company may have obtained or obtained from the SELLER shall at the time when proceedings are taken against the GUARANTOR here under be outstanding or unrealized.

The GUARANTOR hereby declare that it has power to execute this Guarantee and the executant has full powers to do so on its behalf under the proper authority granted to him/them by of the GUARANTOR.

10. Not withstanding anything herein before contained, our liability under this Guarantee is restricted to Rs. ..... (Rupees .... only) and will expire on ..... and unless a claim in writing is presented to us or an action or suit to enforce the claim is filed against us, within six months from the date, all our rights shall be forfeited and we shall be relieved and discharged from all our liabilities thereunder.

IN WITNESS whereof the ..... (Bank) have hereunto set and subscribed their hands the day, month and year first above written.

SIGNED FOR AND ON BEHALF OF THE BANK

WITNESS:

NAME AND ADDRESS **SIGNATURE**

1.

2.

ANNEXURE - J

REVISED PRICE OFFER IN LIEU OF WITHDRAWAL OF DEVIATIONS/ CLARIFICATIONS OFFERED BY BHEL

Sl. No.	Clause Ref.	Description of Deviation/ Clarification	Whether Increase/ Decrease in Price	Unit Rate (if applicable)	Total Increase/ Decrease	Remarks

NOTE: Total increase or decrease in total price shall be indicated either in percentage or in value (Rs.).

(SIGNATURE OF TENDERER)
WITH STAMP

ANNEXURE - K

LIST OF LABORATORY TEST EQUIPMENTS

SL. NO.	DESCRIPTION OF APPARATUS	CODE REF.
01.	VICATS APPARATUS	IS-5513
02.	LE-CHATELIER'S TEST APPARATUS	IS-5514
03.	MOULD (CEMENT)	IS-10086
04.	CEMENT MORTAR MOULD VIBRATOR	IS-10078
05.	CONCRETE CUBE MOULDS	IS-10086
06.	COMPR. STRENGTH TEST M/C	IS-2505
07.	CONCRETE SLUMP CONE	IS-7320
08.	COARSE AGGR. SIEVES	IS-383
09.	FINE AGGR. SIEVES	IS-383
10.	AGGR. IMPACT TEST M/C	IS-9377
11.	(a) SOIL CORE COMPACTOR	IS-2720
	(b) PROCTOR COMPACTION	IS-29
12.	REBOUND HAMMER	
13.	THEODOLITE	
14.	DUMPY LEVEL WITH STAFF	
15.	OVEN	
16.	PHYSICAL BALANCE	
17.	AIR ENTERTAINMENT METER	ST-1199

(SIGNATURE OF TENDERER)
WITH STAMP

ANNEXURE - L

(On Banks Letter Head)

To:

DGM (Finance)
Transmission Business Group,
2nd floor, Bharat Heavy Electricals Limited,
Integrated office Complex, Lodhi Road,
New Delhi 110 003

Ref & Date :

Sub : Confirmation of Bank Guarantee no. <<BG No. >>

We are a Scheduled Bank other than Co-operative Bank under the RBI Act 1934. The aforesaid BG No. << BG No. >> for Rs. <<BG Amount>>/ (In Words Also) and valid upto <<validity date>> is issued by us on behalf of M/s <<Beneficiary's Name>> in favour of BHARAT HEAVY ELECTRICALS LTD. – TRANSMISSION BUSINESS GROUP.
The format of the Bank Guarantee is strictly as per the format prescribed by M/s BHEL and the stamp paper forming part of the BG are as per the state rules extant.

The signatories to the Bank Guarantee are duly authorised.

Thanking You,

For and On Behalf of
Name of the Bank & Seal

(Please Sign Here)

SECTION-B

GENERAL TERMS AND CONDITIONS

SECTION - B
GENERAL TERMS AND CONDITIONS

B.1.0 The following terms shall have the meaning hereby assigned to them except where the context requires otherwise:-

B.1.1 BHEL (or B.H.E. Ltd.) shall mean Bharat Heavy Electricals Limited, a Company registered under Indian Companies Act 1956, with its Registered Office at BHEL House, Siri Fort, New Delhi-110 049 or its Authorised Officers or its Engineers or other employees authorised to deal with any matters with which these persons are concerned.

B.1.2 "GENERAL MANAGER" shall mean the Officer in Administrative charge of the Contracting Unit of BHEL.

B.1.3 “ENGINEER" OR "ENGINEER-IN-CHARGE" shall mean Engineer deputed by BHEL. The term includes "Deputy General Manager, Construction Manager, Resident Engineer, Assistant Site Engineer of BHEL/at the site as well as the officers in charge at Head Office.

B.1.4 “SITE” shall mean the place or places at which the plants/equipment are to be erected and services are to be performed as per the specification of this tender.

B.1.5 "CLIENTS OF BHEL" or "CUSTOMER/OWNER" shall mean the organization to whom BHEL is responsible for this work.

B.1.6 "CONTRACTOR" shall mean the individual, firm or Company who enters into this Contract with BHEL and shall include their executors, administrators, successors and assigns.

B.1.7 "CONTRACT” or "CONTRACT DOCUMENT” shall mean and include the agreement, the work order, the accepted appendices of rates, Schedules of Quantities, if any, General Terms and Conditions of Contract, Special Conditions of Contract, Instructions to Tenderers, the drawings, the Technical Specifications, the Special Specifications, if any, the tender documents and the Letter of Intent\Accepting Letter issued by BHEL. Any conditions or terms stipulated by the tenderer in the tender documents or subsequent letters shall not form part of the Contract unless specifically accepted in writing by BHEL in the Letter of Intent and incorporated in the Agreement.

B.1.8 "GENERAL CONDITIONS OF CONTRACT" shall mean the "Instructions and Information for Tenderers and General terms and Conditions" pertaining to the work detailed.

B.1.9 TENDER SPECIFICATIONS" shall mean the Special Conditions, Technical Specifications, Appendices, Site Information and drawings pertaining to the work for which the tenderers are required to submit their offer. Individual Specification Numbers will be assigned to each tender specification.

B.1.10 “TENDER DOCUMENTS" shall mean the General Conditions of Contract and Tender Specifications.

B.1.11 "LETTER OF INTENT" shall mean the intimation by a letter/telegram/telex/ fax to the tenderer that the tender has been accepted in accordance with provisions contained in the letter. The responsibility of the contractor commences from the date of issue of this letter and all the terms and conditions of contract are applicable from this date.

B.1.12 "COMPLETION TIME" shall mean the period by date specified in the Letter of Intent/Work Order or date mutually agreed upon for handing over of the erected equipment/plant which are found acceptable by the Engineer being of required standard and conforming to the specifications of the contract.

B.1.13 "ZERO DATE" shall mean the planned commencement date of work under this tender and shall be date of issue of Letter of Intent.

B.1.14 "PLANT" shall mean and connote the entire assembly of the plant and equipment covered by the contract.

B.1.15 "EQUIPMENT" shall mean all equipment, machineries, materials, structural, electricals and other components of the plant covered by the contract.

B.1.16 "TESTS" shall mean and include such test or tests to be carried out by the contractor as are prescribed in the contract or considered necessary by BHEL, in order to ascertain the quality, workmanship, performance and efficiency of the contracted work or part thereof.

B.1.17 "APPROVED" "DIRECTED" or "INSTRUCTED" shall mean approved, directed or instructed by BHEL.

B.1.18 "WORK OR CONTRACT WORK" shall mean and include supply of all categories of labour, specified consumables, tools and tackles required for complete and satisfactory site transportation, handling, stacking, storing, civil and electrical works, erection, testing and commissioning of the equipment to the entire satisfaction of BHEL.

B.1.19 "SINGULAR AND PLURAL" etc. words carrying singular number shall also include plural and vice versa, where the context so requires. Words imparting masculine gender shall be taken to include the feminine gender and words imparting persons shall include any Company or Association or Body or Individuals, whether incorporated or not.

B.1.20 "HEADINGS" The headings in these General Conditions are solely for the purpose of facilitating reference and shall not be deemed to be part thereof or be taken into consideration in the interpretation of construction thereof or the contract.

B.1.21 "MONTH" shall mean calendar month.

B.1.22 "WRITING" shall include any manuscript typewritten or printed statement under the signature or seal as the case may be.

B.2.0 **LAW GOVERNING THE CONTRACT AND COURT JURISDICTION:**

The Contract shall be governed by the Law for the time being enforce in the Republic of India. The Civil Court at Delhi having ordinary Original Civil Jurisdiction shall alone have exclusive jurisdiction in regard to all claims in respect of this contract.

B.3.0 **ISSUE OF NOTICE:**

The contractor shall furnish to the Engineer, the name, designation and address of his authorised agent and all complaints, notices, communications and references shall be deemed to have been duly given to the Contractor, if delivered to the Contractor or his authorised agent and shall be deemed to have been so given in the case of posting on the day on which they would have reached such address in the ordinary course of post or at which they were so delivered or left.

B.4.0 **USE OF LAND:**

No land belonging to BHEL or its customer under temporary possessions of BHEL shall be occupied by the contractor without the written permission of BHEL.

B.5.0 **COMMENCEMENT OF WORK:**

B.5.1 The contractor shall commence the work within fifteen days of Letter of Intent or the time indicated in the Letter of Intent/Work Order and shall proceed with the same with due expedition without delay.

B.5.2 If the successful tenderer fails to commence the work within the stipulated time, BHEL, at its sole discretion will have the right to cancel the Letter of Intent/Contract. His Earnest Money and/or Security Deposit will stand forfeited without any further reference to him without prejudice to any and all of BHEL's other rights and remedies in this regard.

B.5.3 All the works shall be carried out under the direction and to the satisfaction of BHEL/Customer/Owner.

B.5.4 The transported equipment, erected/constructed plant or work performed under the contract, as the case may be, shall be taken over when it has been completed in all respect and/or satisfactorily put into operation at site.

B.6.0 **MEASUREMENT OF WORK AND MODE OF PAYMENT:**

B.6.1 All payments due to the contractor shall be made only by "Account Payee Cheques".

B.6.2 For progress/running bill payments, the contractor shall present detailed measurement sheets in triplcate duly indicating all relevant details based on technical documents, protocols & material test reports and connected drawings for the work done during the calendar month/period under different categories in line with terms of payment & as per Letter of Intent. The basis of arriving at the quantities/weights shall be the relevant documents and drawings released by BHEL. These measurement sheets shall be prepared jointly with Engineers of BHEL and signed by all parties.

B.6.3 The measurement sheets will be checked by the Engineer and quantities & percentage eligible for payment under different groups shall be decided by him. The abstract of quantities and percentage so arrived at based on the terms of payment shall be entered in the Measurement Book & signed by both the parties. Where required counter signature of Customer/Owner shall have to be taken.

B.6.4 Based on the above quantities, contractor shall prepare the bills in the prescribed proforma and work out the financial value. These will be entered in the measurement Book and signed by both the parties. Payment shall be made by BHEL after effecting the recoveries due from the Contractor.

B.6.5 All recoveries due from the contractor for the month/period shall be effected in full from corresponding running bills unless specific approval from Competent Authority is obtained to the Contrary.

B.6.6 Measurement shall be taken jointly by person duly authorised by BHEL, Owner and the Contractor.

B.6.7 The Contractor shall bear the expenditure involved, if any, in taking the measurements & testing of materials to be used in the works. The Contractor shall without extra cost to BHEL, provide all the assistance with appliances and other things necessary for measurement.

B.6.8 If at any time due to any reason whatsoever, it becomes necessary to remeasure the work done, in full or in part, the expenses towards such re-measurement shall be borne by contractor.

B.6.9 Passing of bills covered by such measurement does not amount to acceptance by BHEL of the completion of the work measured. Any left out work has to be completed by the Contractor, as directed by BHEL.

B.6.10 Final measurement bill shall be prepared in the proforma prescribed for the purpose, based on the certificate issued by the Engineer that the entire work as stipulated in the tender specification has been completed in all respects to the entire satisfaction of BHEL.

The contractor shall give unqualified "No claim" and "No Demand" certificates. All the tools and tackles loaned to him should be returned in condition satisfactory to BHEL. The abstract of final quantities and financial values shall also be entered in the Measurement Book and signed by both the parties. The final bill shall be paid after completion of all the defects/deficiencies etc. pointed out by BHEL. The Contractor should submit all the original documents such as material consumption, site order book etc. maintained at site. After payment of final bill, only guarantee obligation percentage value shall remain unpaid, which shall be released in accordance with Clause A.17.7.

B.7.0 **RIGHTS OF BHEL:**

BHEL reserves to itself the following rights in respect of this Contract without entitling the Contractor for any compensation.

B.7.1 To get the work done through another agency at the risk and cost of the Contractor, in the event of poor progress, or the contractor's inability to progress the work for completion as stipulated in the Contract, poor quality of work, persistent disregards of instructions of BHEL, assignment, transfer, subletting of the contracted work without written permission of BHEL, non fulfilment of any contractual obligations etc. and to claim/recover compensation for such losses from the contractor including BHEL's supervision charges and overheads from Security Deposit/other dues.

B.7.2 To withdraw any portion of work &/or to restrict/alter quantum of work as indicated in the contract during the progress of construction and get it done through other agency and/or by departmental labour to suit BHEL's commitment to its customer or in case BHEL decides to advance the date of completion period due to other emergent reasons/BHEL's obligations to its customer.

B.7.3 To terminate the contract after due notice and forfeit Security Deposit and recover the loss sustained in getting the balance work done through other agencies in addition to liquidated damages in the events of :

a) Contractor's continued poor progress.
b) Withdrawal from or abandonment of the work before completion of the work.
c) Corrupt or illegal act of the Contractor.
d) Insolvency of the Contractor
e) Persistent disregard of the instructions of BHEL.
f) Assignment, transfer, subletting of the contract work without BHEL's written permission.
g) Non-fulfilment of any contractual obligations.

B.7.4 To recover any moneys due from the Contractor, from any moneys due to the contractor under this or any other contract or from the Security Deposit.

B.7.5 To recover additional cost incurred in execution of work along with BHEL overhead (i.e. @ 5% of executed value of such work) in case BHEL has

decided to execute the work at risk & cost of the contractor. The work can be executed either directly by BHEL or through another agencies.
.

B.7.6 To terminate the Contract or to restrict the quantum of work and pay only for the portion or work done in case BHEL's contract with its customer is terminated/ altered/deferred/disputed/frustrated for any reasons.

B.7.7 To effect recoveries from any amounts due to the Contractor under this or any other contract or in any other form the moneys which BHEL is forced to pay to anybody due to contractor's failure to fulfil any of his obligations.

B.7.8 To restrict or increase the quantity and nature of work to suit site requirements, since the tender specification is based on preliminary documents and quantities furnished therein are indicative and approximate and the rates quoted shall not be subject to revision.

B.7.9 To deploy BHEL's skilled and unskilled workmen in case of emergency/poor progress/deficiency in skill on the part of the employees of the contractor and to recover the expenditure on account of the same from the moneys due to the contractor.

B.7.10 While every endeavour will be made by BHEL to this end, BHEL can not guarantee uninterrupted work due to conditions beyond its control. The contractor will not be entitled to any compensation/extra payment on this account. No idle labour charges will be payable by BHEL in any case.

B.7.11 In the event of any dispute of technical nature, the decision of BHEL shall be final and binding on the Contractor.

B.8.0 **RESPONSIBILITY OF THE CONTRACTOR IN RESPECT OF LOCAL LAWS, EMPLOYMENT OF WORKERS ETC:**

The following are the responsibilities of the Contractor in respect of observance of local laws, employment of personnel, payment of taxes etc.

B.8.1 As far as possible, unskilled workers shall be engaged from the local areas in which the work is being executed. In case of any necessity is felt by the contractor to bring labourers from out side State, provisions of law governing such immigration by the concerned State are to be followed.

B.8.2 The Contractor at all times during the currency of this contract, shall in all his dealings with the local labour for the time being employed on or in connection with the work, have due regard to all local festivals, religious and other customs.

B.8.3 The contractor shall comply with all State and Central Laws, Statutory Rules, Regulations etc., such as: The payment of wages to, The Minimum Wages Act, The Workmen Compensation Act, The Employees Liability Act, The Industrial Dispute Act, The Employees Provident Fund Act, Employees State Insurance Scheme, The Contract Labour (Regulations and Abolition) Act 1970 and other Acts, Rules & Regulations for labour as may be enacted by the Government during the tenure of the contract and having in force or jurisdiction at site. The Contractor shall give to the local Governing Body, Police and other concerned Authorities all such notice as may be required under law.

B.8.4 The contractor, as required, will obtain independent license under the Contract Labour (Regulations & Abolition) Act 1970 from the concerned authorities based on the certificate (Form-V) issued by the Principal Employer/Customer.

B.8.5 The Contractor shall pay all taxes, fees, license charges, deposits, duties, tolls, royalty, commissions or other charges which may be Leviable on account of any of his operations connected with this contract. The Contractor is responsible to furnish documentary evidence towards GST Registration of the State wherein the site is located and any other documents as per GST Act which may be be required from time to time by BHEL.The contractor should have to get the contract registered immediately after award of works as per rules and regulations of the State Government. The contractor shall file regular return as per statute of the State/Centre and should provide all information to BHEL as required for the assessment of the project concerned. In case BHEL is forced to make any of such payments, BHEL shall recover the same from the contractor either from moneys due to him or otherwise as deemed fit.

B.8.6 Arrangements for the periodical visits of inspection agencies such as Electrical Inspector etc. to site, inspection certificates etc. will have to be made by the contractor at his cost. The contractor will also meet all expenses in connection with his welder's qualification/ re-qualification tests etc.

B.8.7 The contractor shall be responsible for provision of health and sanitary arrangements {more particularly described in the Contract Labour (Regulation & Abolition) Act 1970} & safety precautions as may be required for safe and satisfactory execution of the contract.

B.8.8 The Contractor shall be responsible for proper accommodation including adequate medical facilities for the personnel employed by him.

B.8.9 The Contractor shall be responsible for the proper behaviour and observance of all regulations by the staff employed by him.

B.8.10 The contractor shall ensure that no damage is caused to any person/property of other parties working at site. If any such damage is caused, it shall be the responsibility of the contractor to make good the losses or compensate them.

B.8.11 All the properties/equipment/components of BHEL/its customer loaned with or without deposit, to the contractor, shall remain the properties of BHEL/its customer. The contractor shall use such properties for the purpose of execution of this contract. All such properties/equipment/components shall be taken in to good condition unless notified to the contrary by the contractor within 48 Hrs. The Contractor shall return them in good conditions as and when required by BHEL/ its customer. In case of non-return, loss, damage repairs etc., the cost thereof, as may be fixed by the Engineer, will be recovered from the contractor.

B.8.12 It shall not be obligatory on the part of BHEL to supply any tools and tackles or materials other than those specifically agreed to be given by BHEL. However, depending upon availability/possibility, BHEL/its customer's equipment and other materials may be made available to the contractor on payment of the hire charges as fixed by them, subject to the conditions laid down by BHEL/its Customer from time to time. Unless paid in advance, such hire and other charges shall be recovered from out of dues to the contractor or Security Deposit in one instalment. In case, BHEL provide the material like steel etc. for Subcontractors / Suppliers, handling charges @ 15% per annum or 1.25% per month or part thereof will be recovered from the contractor in addition to the actual procurement cost of material. The period for imposing handling charges is to be reckoned from the date of making payment/LR for lifting material to / by Subcontractor from authorized source, whichever is earlier to

a) The date of LR for dispatch of finished product by the supplier / fabricator.
b) Till date of consumption by the contractor as recorded in the MB.

B.8.13 The Contractor shall fully indemnify and keep indemnified BHEL/its customer against all claims of whatsoever nature arising during the course of execution of this contract.

B.8.14 In case the contractor is required to undertake any work outside the scope of this contract, the amount payable shall be as may be mutually agreed upon.

B.8.15 Any delay in completion of works or non-achievement of periodical targets, due to reasons attributable to the contractor, will have to be compensated by the contractor either by increased manpower and resources or by working extra hours or more than one shift at no extra cost to BHEL.

B.8.16 The contractor shall execute the work under the conditions usual to such construction work and in conjunction with numerous other operations at site and proceed in a manner that shall help in the progress of work at site as a whole.

B.8.17 The contractor will be directly responsible for payment of wages to his workmen. A pay roll sheet giving details of all payments made to the workmen duly signed by the contractor's representative should be furnished to BHEL, with each running account bill.

B.8.18 In case of any class of work for which there is no specification laid down in the contract, such work shall be carried out in accordance with the instructions and requirements of the Engineer.

B.8.19 No levy, payment or charges made or imposed shall be impeached by reason of any clerical error or by reason of any mistake in the amount levied, demanded or charged.

B.8.20 No idle labour charges will be admissible in the event of any stoppage of work resulting in the contractor's workmen being rendered idle due to any reason any time.

B.8.21 The contractor shall take all reasonable care to protect the materials and the work till such time the place/equipment has been taken over by BHEL/its customer.

B.8.22 The contractor shall not stop work or abandon the site for whatsoever reason or dispute, excepting for force majeure conditions. All problems/disputes shall be separately discussed and settled without affecting the progress of work. Stoppage or abandonment of work, other than under force majeure conditions, shall be treated as breach of work of contract and dealt with accordingly.

B.8.23 The contractor shall keep the area of work clean and shall remove debris etc. while executing day-to-day work. Upon completion of work, the contractor shall remove from the vicinity of works, all scrap, packing materials, rubbish, unused and other materials and deposit them in places specified by the Engineer. The contractor will also demolish all the hutments, sheds, offices etc. constructed & used by him and shall clean the debris. In the event of his failure to do so, the same will be arranged to be done by the Engineer and the expenses recovered from the contractor.

B.8.24 The contractor shall execute the work in the most substantial and workman like manner in the stipulated time. Accuracy of work and timely execution shall be the essence of this contract. The contractor shall be responsible to ensure that the quality, assembly and workmanship conform to the dimensions and clearance given in the drawings and/or as per instructions of the Engineers.

B.8.25 The contractor shall furnish progress reports on work at regular intervals as required by the Engineer.

B.9.0 **RESPONSIBILITIES OF CONTRACTOR IN RESPECT OF SAFETY OF MEN, EQUIPMENT, MATERIAL AND ENVIRONMENT:**

B.9.1 All safety rules and codes applied by BHEL/its customer at site shall be observed by the contractor and his workmen without exception. The contractor shall be responsible for the safety of the equipment/materials and work to be performed by him and shall maintain all lights, fencing guards, signs etc. or other protections necessary for the purpose. Contractor shall also take such additional precautions as may be indicated from time to time by the Engineer, with a view to prevent pilferage, accidents, fire hazards etc. and suitable number of clerical staff, watch and ward, store keepers to take care of equipment, materials and construction tools & tackles shall be posted at site by the contractor till the completion of the work under this con tract. The contractor shall arrange for such safety devices as are necessary for this type of work & carry out the requisite site tests of handling equipment, lifting tools, tackles etc. as per usual standards and practices.

B.9.2 The contractor shall provide to its work force & ensure the use of required personal protective equipment as found necessary & as directed by the authorised BHEL officials.

i) Safety helmets conforming to IS-2925 : 1984.
ii) Safety belts conforming to IS-3521 : 1983.
iii) Safety shoes conforming to IS-1989 : 1978.

iv) Eye and face protection devices conforming to IS-8520 : 1977 and IS-8940 : 1978.

v) Hand and body protection devices conforming to IS-2573 : 1975, IS-6994 : 1973, IS-8807 : 1978 and IS-8519 : 1977.

B.9.3 All tools, tackles, fitting appliances, material handling equipment, scaffolds, cradles, safety nets, ladders, equipment, etc. used by the contractor shall be of safe design and construction and maintained in good condition. However BHEL officials shall have the right to ban use of any of them or get them tested at their discretion. All electrical equipment, connections & wiring for construction power, its distribution & use shall conform to the relevant requirements of Indian Electricity Act and Rules. Only electricians licensed by the appropriate statutory authority shall be employed by the contractor to carry out electrical works.

B.9.4 All electrical appliances including portable electric tools used by contractor shall have safe plugging system to source of power and be appropriately earthed.

B.9.5 The contractor shall not use any hand lamp energised by electric power with supply voltage of more than 240 volts. For work in confined spaces, lighting shall be arranged with power source of not more than 240 volts.

B.9.6 Where it becomes necessary to provide and/or store petroleum products, explosives, chemicals and liquid or gaseous fuel or any other substance that may cause fire or explosion, the contractor shall be responsible for carrying out such provision and/or storage in accordance with the rules and regulations laid down in the relevant Government Acts, such as Petroleum Act, Explosive Act, Petroleum & Carbides of Calcium Manual of the Chief Controller of Explosives, Government of India etc. Prior approval of the authorised BHEL official at the site shall also be taken by the contractor in all such matters.

B.9.7 The contractor shall arrange at his cost appropriate illumination as required at all work spots for safe working, when natural day light may not be adequate for clear visibility.

B.9.8 In case of a fatal or disabling injury/accident to any person at construction sites pertaining to this work, the victim and/or his/her dependents shall be compensated by the contractor as per statutory requirements. However, if considered necessary, BHEL shall have the right to impose appropriate financial penalty on the contractor & recover the same from payments due to the contractor for suitably compensating the victim and/or his/her dependents.

Before imposing any such penalty, appropriate enquiry shall be held by BHEL giving opportunity to the contractor to present his case.

B.9.9 In case of any damage to property due to lapse by the contractor, BHEL shall have the right to recover the cost of such damages from the payments due to the contractor.

B.9.10 In case of any delay in the completion of a job due to mishaps attributable to lapses by the contractor, BHEL shall have the right to recover cost of such delay from the payments due to the contractor, after notifying the contractor suitably and giving him opportunity to present his case.

B.9.11 If contractor fails to improve the standards of safety in its operation to the satisfaction of BHEL after being given reasonable opportunity to do so and/or if the contractor fails to take appropriate safety precautions or to provide necessary safety devices and equipment or to carry out instructions regarding safety issued by the authorised BHEL official, BHEL shall have the right to take the corrective steps at the risk and cost of the contractor after giving appropriate notice indicating the steps that would be taken by BHEL.

B.9.12 The contractor shall submit report of all accidents, fires, property damaged and dangerous occurrences connected with his area of work or caused due to his action/inaction, to the authorised BHEL official immediately after such occurrence, but in any case not later than 12 hours of the occurrence.

B.9.13 During the course of construction, alteration or repairs scrap lumbers with protruding nails, sharp edges etc. and all other debris including combustibles scrap shall be kept cleared from working areas, passage ways and stairs in and around site.

B.9.14 Cylinders shall be moved by tilting and rolling them on their bottom edges. They shall not be intentionally/negligently dropped, struck or permitted to strike each other violently. When cylinders are transported by powered vehicles, they shall be secured in a vertical position.

B.9.15 The contractor shall be responsible for the safe storage of his radioactive sources if same have been permitted to use.

B.9.16 All contractor's supervisory personnel and sufficient number of workmen shall be trained for fire fighting and first aid duties and shall be assigned specific duties. Enough number of such trained personnel must be available during the tenure of the contract.

B.9.17 Contractor shall provide enough fire protecting equipment of the types and numbers at his office, stores, construction/erection site, other temporary structures, labour colony area etc. Access to such fire protection equipment shall be easy and kept open at all times. Compliance of the above requirement under fire protection system at project site shall in no way relieve the contractor of any of his responsibilities and liabilities to fire accident occurring. In the event of fire safety measures being not to BHEL's satisfaction, BHEL shall have option to provide the same and recover the cost plus incidentals from contractor's bills and/or impose penalty as deemed fit by the Engineer.

B.9.18 Before commencing the work, the contractor shall appoint/nominate a responsible officer to supervise implementation of all safety measures and liaison with BHEL Engineer at site.

B.9.19 If safety record of the contractor in execution of the awarded job is to the satisfaction of Safety Department of BHEL, issue of an appropriate certificate to recognise the safety performance of the contractor may be considered by BHEL after completion of the job.

B.10.0 **CONSEQUENCES OF CANCELLATION:**

B.10.1 Whenever BHEL exercises its authority to terminate the contract / withdraw a portion of work, the work may be got completed by any other means at the contractor's risk and cost provided that in the event of the cost of completion (as certified by the Engineer which shall be final and binding on the contractor) being less than the contract value, the advantage shall accrue to BHEL. If the cost of completion exceeds the money due to the Contractor under the Contract, the Contractor shall either pay the excess amount demanded by BHEL or the same shall be recovered from the contractor. This will be in addition to the forfeiture of Security Deposit & recovery of liquidated damages as per relevant clauses.

B.10.2 In case BHEL completes the work under the provisions of this clause, the cost of such completion to be taken into account for determining the excess cost to be charged to the contractor shall consist of cost of materials purchased and/or labour provided by BHEL with an addition of such percentage to cover supervision and establishment charges as may be decided by BHEL.

B.11.0 **INSURANCE:**

B.11.1 BHEL/its customer shall arrange for insuring the project materials/properties of BHEL/its customer covering the risks during storage, construction, erection and commissioning.

B.11.2 It shall be the sole responsibility of the Contractor to insure his workmen against risks of accident and injury while at work as required by the relevant rules and to pay compensation, if any, to them as per Workmen's Compensation Act. The Contractor shall also insure his staff against accidents. The work will be carried out in a protected area and all the rules and regulations of BHEL/its client in the project area which are in force from time to time will have to be followed by the contractor.

B.11.3 If due to negligence and/or non-observance of safety and other precautions any accident/injury occurs to any other person/public, the contractor shall pay necessary compensation and other expenses, if so decided by the appropriate authority.

B.11.4 It shall be the responsibility of the contractor to provide security and insurance claim related information/reports etc. for the equipment/material belonging to BHEL/its customer and handed over to the contractor for transportation/erection/construction till these are taken over by BHEL after erection/construction or are returned to BHEL/its customer's store.

B.11.5 If due to Contractor's carelessness, negligence, non-observance of safety precautions, improper security arrangements or due to non-compliance of paper work needed for lodging insurance claim, damage to BHEL/its Customer's property and/or personnel should occur, and if BHEL is unable to recover its claim from the Insurance Company, the deficit will be recovered from the Contractor.

B.12.0 **STRIKES & LOCKOUTS:**

B.12.1 The Contractor will be solely responsible for all disputes & other issues connected with his workmen. In the event of the contractor's workmen resorting to strike or the contractor resorting to lockout & if the strike or the lockout so declared is not settled within a period of one month, BHEL shall have the right to get the work executed by employing its own men or through other agencies or both. The cost incurred by BHEL in this regard shall be recovered from the Contractor.

B.12.2 For any purpose whatsoever, the employees of the contractor shall not be deemed to be in the employment of BHEL/its Customer.

B.13.0 **FORCE MAJEURE:**

B.13.1 The following shall amount to force majeure conditions:-

Acts of God, Act of any Government, war, Sabotage, riots, civil Commotion, Police Action, Revolution, Flood, Fire Cyclone, Earthquake, Epidemic & other similar causes over which the contractor has no control.

B.13.2 If the contractor suffers delay in the due execution of the contract, due to delays caused by force majeure conditions, as defined above, the agreed time of completion of the work covered by this contract may be extended by a reasonable period of time in consultation and after agreement of BHEL's clients/owner, provided that on the occurrence of any such contingency, the Contractor immediately reports to BHEL in writing the causes of delay. The Contractor shall not be eligible for any compensation on this account.

B.14.0 **GUARANTEE:**

The guarantee and defect liability period shall be 12 months from the date of commissioning of switchyard or handing over of entire civil works, whichever is later.

B.15.0 **ARBITRATION:**

(i) Except as provide elsewhere in this Contract, in case amicable settlement is not reached between the Parties, in respect of any dispute or difference; arising out of the formation, breach, termination, validity or execution of the contract; or, the respective rights and liabilities of the Parties; or, in relation to interpretation of any provision of the contract; or, in relation to interpretation of any provision of the Contract; or, in any manner touching upon the contract, then, either Party may, by a notice in writing to the other Party refer such dispute or difference to the sole arbitration of an arbitrator appointed by Head of the BHEL Unit/Region/Division issuing the Contract.

The Arbitrator shall pass a reasoned award and the award of the Arbitrator shall be final and binding upon the Parties.

Subject as aforesaid, the provisions of Arbitration and Conciliation Act 1996 (India) or statutory modifications or re-enactments thereof and the rules made thereunder and for the time being in force shall apply to the arbitration proceedings under this clause. The seat of arbitration shall be New Delhi.

The cost of arbitration shall be borne as per the award of the Arbitrator.

Subject to the arbitration in terms of clause L above, the court at New Delhi shall have exclusive jurisdiction over nay matter arising out of or in connection with this Contract.

Notwithstanding the existence or any dispute or differences and/or reference for the arbitration, the Contractor shall proceed with and continue without hindrance the performance of its obligations under this contract with due diligence and expedition in a professional manner except where the contract has been terminated by either Party in terms of this contract.

(iI) In the event of dispute or difference relating to the interpretation and application of the provisions of commercial contract(s) between Central Public Sector Enterprises (CPSEs)/ Port Trusts inter se and also between CPSEs and Government Departments/ Organizations (excluding disputes concerning Railways, Income Tax, Customs & Excise Departments), such dispute or difference shall be taken up by either party for resolution through AMRCD as mentioned in DPE OM No.4(1)/2013-DPE9GM)/ FTS-1835 dated 22.05.2018.

SECTION-C

SPECIAL CONDITIONS OF CONTRACT

SECTION - C-1

SPECIAL CONDITIONS OF THE CONTRACT

C-1.0 **INSTRUCTIONS TO TENDERERS:**

C-1.1 The tenderers are advised to physically visit the site and fully acquaint themselves with site conditions, transportation routes, various distances etc. No claim will be entertained by BHEL on ground of lack of knowledge and the contractor's rates shall be deemed to have taken this into account.

C-1.2 All temporary structures, hutments etc. set up by the contractor or their workmen during execution shall be removed prior to submission of final bill by the contractor.

C-1.3 The contractor in the event of this work awarded to him, shall establish an office at site and keep posted an authorised, responsible officer with a valid power of attorney for the purpose of the contract. Any order or instructions of the "Engineer" or his duly authorised representatives, communicated to the contractor's representative at site will be deemed to have been communicated to the contractor at his official address.

C-1.4 The contractor is required to commence the work within two weeks from the date of issue of Letter of Intent or as indicated in the LOI/Work Order, failing which the LOI/contract is liable to be cancelled and EMD/SD shall be forfeited.

C-1.5 BHEL reserves the right to split up the work and to award to more than one contractor or award only a part of the work to a contractor.

C-2.0 **PERFORMANCE BOND:**

The contractor shall submit Bank Guarantee of an approved Nationalised Bank as per BHEL proforma for an amount equal to 2.5% of the contract value as performance bond to get his balance 2.5% payment released at the discretion of the engineer as per the general conditions of contract. The performance Bank Guarantee shall remain valid up to successful completion of performance and guarantee tests of the station and taking over of the plant by BHEL/client of BHEL. Not withstanding the provisions of any other clause(s) of General Conditions of Contract, the contractor shall continue

to be responsible to execute all such works of repair, rectification and making good of defects, imperfections of other faults as may be required of the contractor in writing by the Engineer for the period as stated above. The proforma for submission of the BG shall be as per Annexure I.

Above clause no. C-2.0 shall be read in conjunction with clause no. C-29.5.2.

C-3.0 **SITE DRAINAGE:**

All water which may accumulate on the site during the progress of the works, or in trenches and excavations, including monsoon period shall be removed by the contractor from the site to the satisfaction of the Engineer at the contractor's expense.

C-4.0 **EXECUTION OF THE WORK:**

C-4.1 The work will be executed in a workman like manner and to the entire satisfaction of the Engineer and as per technical specifications of this tender, IS Codes, CPWD specifications etc. as applicable. In case of conflict regarding interpretations the decision of the Engineer shall be final and binding.

C-4.2 The Engineer will communicate or confirm his instructions to the contractor in respect of the execution of the work in a "Site Order Book" maintained at his office and confirm issue of such instructions by signing the relevant entries in this book. Such entries will rank as order or notices in writing within the intent and meaning of these conditions.

C-5.0 **INSPECTION AND STAGE APPROVAL OF THE WORK:**

C-5.1 BHEL/BHEL's Client or the owner or his duly authorised representative shall have at all reasonable times access to the contractor's premises of works and shall have the power to inspect drawings or any portion of the work, examine the materials and workmanship and shall have the authority to reject any work. This would be implemented through joint inspection by the representatives of the owner and BHEL and in the form the joint protocol without any extra claim of time and amount.

C-5.2 All work embracing more than one process shall be subject to examination and approval at each stage thereof and the contractor shall give due notice in writing to the Engineer when each stage is ready. In default of such notice being received, Engineer shall be entitled to approve the quality and extent thereof at any time he may choose and in the event of any dispute, the decision of the Engineer thereon shall be final and conclusive.

C-6.0 **COMPLETION OF WORK:**

C-6.1 The works shall be completed to the entire satisfaction of the Engineer and in accordance with the completion schedule as specified & agreed in the contract, and all unused stores and materials, tools, plant and equipment, temporary buildings and things shall be removed and the site work cleared of rubbish and all waste materials and delivered up clean and tidy to the satisfaction of the Engineer at the contractor's expenses.

C-6.2 BHEL shall have power to take over from the contractor from time to time such sections of the work as have been completed to the satisfaction of the Engineer. Such works however shall not be treated as have been completed until the entire works are executed to the satisfaction of the Engineer. The Guarantee period shall commence only after handing over the entire works.

C-7.0 **UNCOVERING AND ADJUSTMENT OF ERRORS:**

The contractor shall uncover any part of the works and/or make openings in or through the same as the Engineer may from time to time direct for his verification and shall reinstate and make good such part to the satisfaction of the Engineer. If any such part has been covered up or put out of view after being approved by the Engineer and is subsequently found on uncovering to have been executed in accordance with the contract, the expenses of uncovering and/or making opening in or through, reinstating and making good the same shall be borne by BHEL. In any other case all such expenses shall be borne by the contractor.

C-8.0 **DISCREPANCIES AND ADJUSTMENT OF ERRORS:**

C-8.1 The several documents forming the contract are to be taken as mutually explanatory of one another, detailed drawings being followed in preference to small scale drawings & figures dimensions in preference to scale & special conditions in preference to general conditions.

C-8.2 In case of discrepancies between schedule of quantities, the specification and/or the drawings the following order of preference shall be observed :

a) Description in Schedule of Quantities.
b) Special Conditions.
c) Drawings.
d) Technical Specifications.
e) General Conditions of Contract.

C-8.3 If there are varying or conflicting provisions made in any one document forming part of the contract, the Engineer shall be the deciding authority with regard to the document.

C-8.4 Any error in the description, quantity in schedule of quantities or any omission there from shall not vitiate the contract or release the contractor from the execution of the whole or any part of the works comprised therein according to the drawings and specifications or from any of his obligations under the contract.

C-8.5 If on check there are found to be differences between the rates given by the contractor in words and figures or in the amount worked out by him in the schedule of quantities and general summary, the same shall be adjusted in accordance with the following rules :

a) In the event of discrepancies between description in words and figures quoted by tenderer, the description in words shall prevail.

b) In event of an error occurring in the amount column of schedule of quantities as a result of wrong extension of the unit rate and the quantity, the unit rate shall be regarded as firm and extension shall be amended on the basis of the rates.

c) All errors in totalling in the amount column and in carrying forward totals shall be corrected.

d) The totals of sections of bill of quantities amended shall be carried over to the general summary and the tendered sum amended accordingly. The tendered sum so altered shall, for the purpose of tender, be substituted for the sum originally tendered and considered for acceptance instead of the original sum quoted by the tenderer. Any rounding of quantities or in sections of bill of quantities or in general summary, by the tenderer, shall be ignored.

C-8.6 If neither drawings nor specifications contain any mention of minor details of construction which in the opinion of the Engineer, whose decision shall be final and conclusive, are reasonable and obviously and fairly intended for satisfactory completion of work, such details shall be provided by the contractor without any extra cost, as if they were specially mentioned and shall be deemed to be included in the contract.

C-9.0 **DEVIATIONS:**

C-9.1 The contractor shall not make any alternation in, addition to or omission from the work as described in the tender documents except in pursuance of the written instructions of the Engineer. No such deviation from the work described in the tender documents shall be valid unless the same has been specially confirmed and accepted by the Engineer in writing and incorporated in the contract.

C-9.2 The engineer may deviate, either by way of addition or deletion, from the work so described, provided that the contract sum be not thereby varied on the whole by more than the percentage set out in the tender documents. The value of all additions and deletions shall be added to or deleted from the contract sum.

C-9.3 Any objections by the contractor to any matter concerning the order shall be notified by him in writing to the Engineer within 7 (seven) days from the date of such order, but under no circumstances shall the work be stopped (unless so ordered by the Engineer) owing to differences or controversy that may arise from such an objection. In the absence of such a notification of objection by the contractor, he will be deemed to have accepted the order and conditions stated therein.

C-10.0 **VALUATION OF DEVIATIONS:**

C-10.1 If the rates for the additional, altered or substituted work are specified in the contract for the work either in the same section or in the other section of the BOQ of the same work, the contractor is bound to carryout the additional, altered or substituted work at the same rates as are specified in the contract for the work.

C-10.2 For item which are required for successful completion of work but not covered in the BOQ:- if items are available in DSR -2016, then valuation shall be done at DSR rate (DSR 2016) along with applicable % as per contract and same shall be binding to the bidder.

C10.2.1 EXTRA/ ADDITIONAL ITEMS OF WORK

If any extra or additional items, which are not incorporated in the BOQ schedule, have to be executed by the contractor, the rate of such extra or additional work shall be as per the following:

C10.2.2 If the items are not covered under price schedule, the rates have to be agreed upon mainly on the basis of prevailing market rates for which all documentary evidences as required by BHEL shall have to be produced by the contractor. Decision of BHEL in such cases shall be final and binding on the contractor.

C-10.2.3 Under no circumstances the contractor shall suspend the work on the plea of non- settlement of rates falling under the clause or claim any compensation on that account.

C-10.2.4 BHEL reserves the right to carry out such extra/additional items of work through any other contractor or in such a manner as he considered advisable.

C-10.2.5 The contractor, on receipt of drawing from BHEL, shall inform BHEL (within 15 days) the rate / rates of item/items for carrying out the extra/additional item of work. This shall be supported by analysis of rates including prevailing market rates.

C--10.2.6 If the rate for additional, altered or substituted work is available in DSR 2016 then the rate shall be settled as per clause no. C-10.2.

C-10.3 Variation in quantity of work: - There may be variations in the individual item in the schedule during actual execution of the work. However, tendered unit rates shall remain firm up to a variation of ± 30% of the total value of the contract irrespective of variations in the quantity of individual items.

C-11. RECORD AND MEASUREMENT:

C-11.1 All items having a financial value shall be entered in BHEL measurement book so that a complete record is obtained of all works performed under the contract.

C-11.2 Work which fails to be measured in details shall be measured physically without reference to any local custom that may obtain excepting where it may otherwise be directed in the tender documents. The measurements shall be taken jointly by any person duly authorised on the part of BHEL and the contractor.

C-11.3 The contractor shall, without extra charge, provide assistance with appliances and other things necessary for measurement and shall bear all the cost of measurement of his work.

C-11.4 Measurement shall be entered in BHEL measurement book and signed and dated by both parties at the site on completion of measurement. If the contractor objects to any of the measurements recorded on behalf of BHEL, a note to that effect will be made in BHEL measurement book or against the item or items objected to and such note shall be signed and dated by both the parties engaged in taking the measurement.

C-11.5 If, as result of such objection, it becomes necessary to remeasure the work wholly or in part, the expense of such measurement shall be borne by the contractor.

C-11.6 If the contractor's representative fails to attend when required, the engineer shall have power to proceed by himself to take measurements & in that case these measurements shall be accepted by the contractor as final.

C-11.7 The contractor shall, once in every month, submit to the Engineer details of his claims for the work done by him up to and including the previous month, which are not covered by this contract agreement in any of the following respects:

a) Deviations from items and specifications provided in the contract documents.
b) Extra item/new items of work.
c) Quantities in excess of those provided in the contract schedule.
d) Items in respect of which rates have not been settled.

C-11.8 Contractor should, in addition, furnish a clear certificate to the effect that the claims submitted by him as aforesaid cover all his claims and that no further claims shall be raised by him in respect of the work done up to and including the period under report.

C-12.0 **CONTRACTOR'S SUPERVISION:**

C-12.1 The contractor shall either himself supervise the execution of the contract or shall appoint a competent agent approved by the Engineer to act in his stead.

C-12.2 The contractor, shall employ an engineer/agent having qualification in Civil Engineering from a recognised Institute for any work with a contract value exceeding Rs. Two Lakhs.

C-12.3 If the contractor fails to appoint a suitable engineer/agent as aforesaid, the Engineer shall have full powers to suspend the execution of work & stop payment of any amount that may have become due until such date as a

suitable engineer/agent is appointed and the contractor shall be held responsible for the delay caused to the work & no extension of time on this account shall be given to him.

C-12.4 Orders given to the contractor's engineer/agent shall be considered to have the same force as they had been given to the contractor himself.

C-12.5 The contractor or his agent shall be in attendance at the site during all working hours and shall superintend the execution of work with such additional assistance in each trade as the Engineer may consider necessary.

C-12.6 The contractor or his agent shall attend, when required and without making claim for doing so, either the office of the Engineer or work site to receive instructions.

C-12.7 The Engineer shall have full powers, and without assigning any reason, to require the contractor immediately to cease to employ in connection with this contract any agent, servant or employee whose continued employment, in his opinion, undesirable.

C-13.0 **LABOUR AND SUPERVISION STAFF:**

C-13.1 The contractor shall engage experienced supervisory staff and specially skilled labour for work under this contract.

C-13.2 The contractor shall have to make his own arrangement for maintenance of his T and P so as to minimise the down time.

C-13.3 The supervisory staff employed by the contractor shall ensure proper out-turn of the work and discipline on the part of the labour put on the job. The contractor in general should see that the works are carried out in a safe and proper manner and in coordination with the staff employed directly by BHEL or other contractors of BHEL or its client.

C-13.4 It shall be the responsibility of the contractor to ensure safe working, taking due precautions to avoid any accident and damage to other equipment and personnel. He shall be liable for all accidents, damages etc. to personnel and equipment etc. during the execution of the work.

C-13.5 The work shall be executed under the usual conditions like rain, insufficient space, improper approach roads etc. affecting major construction work and in conjunction with numerous other operations at site. The contractor and his personnel shall cooperate with the others and proceed in a manner that shall

not delay or hinder the progress of work as a whole nor claim any compensation on such grounds.

C-13.6 The contractor will arrange necessary accommodation for his supervisory and workmen at his own cost. However, BHEL will approach customer for accommodation for contractor's staff and labour on chargeable basis, if possible.

C-14.0 **PLANT AND EQUIPMENT AT SITE:**

C-14.1 The contractor shall, at his own expenses, supply all tools, plant and equipment (hereinafter referred as T and P), testing instruments and consumables required for the execution of the contract.

C-14.2 All tools, plant & equipment brought to the site shall become the property of the BHEL & shall not be removed from the site without the written approval of the Engineer. When the work is finally completed or the contract is terminated for reasons other than the default of the contractor, he shall forthwith remove from the site all tools, plant, equipment etc. (other than those as may have been provided by BHEL) and upon such removal, the same shall revert in & become the property of the contractor.

C-15.0 **COMPLIANCE TO REGULATIONS AND BY LAWS:**

C-15.1 The contractor shall confirm to the provisions at any statute relating to the work and regulations and bylaws of any local authority and of any water and lighting companies or undertaking with whose system the work is proposed to be connected. He shall before making any variation from the drawings or the specifications that may be necessitated for such connections give the Engineer, notice specifying the variation proposed to be made & the reasons thereof & shall not carry out any such variation until he has received instructions from the Engineer in respect thereof. The contractor shall be bound to give all notices required by statute, regulations or by laws as aforesaid and to pay all fees and taxes payable to any authority in respect thereof.

C-16.0 **MATERIALS OBTAINED FROM EXCAVATION:**

C-16.1 Materials of any kind obtained from excavation on the site shall remain in property of BHEL & shall be disposed of as the Engineer may direct, at no extra cost.

C-17.0 **TREASURE, TROVE, FOSSILS, ETC:**

All fossils, coins, articles of value or antiquity and structures and other remains or things of geological or archaeological interest discovered on the site shall be the absolute property of BHEL and the contractor shall take reasonable precautions to prevent his workmen or any other person from removing or damaging any such article or thing, shall immediately upon discovery thereof and before removal acquaint the Engineer with such discovery and carry out the Engineer's directions as to the disposal of the same.

C-18.0 **PROTECTION AND SECURITY:**

The contractor shall provide and maintain at his own expenses all lights, guards, fencing and Watch & Ward when and where necessary or required by Engineer for the protection and security of the works or for the safety and convenience of those employed on the works or the public.

C-19.0 **SITE OFFICE AND STORES:**

C-19.1 BHEL shall provide to the restricted extent, open space as made available to BHEL by its customer in as is where is basis for site office and stores, free of charge.

C-19.2 The contractor shall provide, construct and maintain at his own expenses the site office, material testing laboratory, stores & shall make his own arrangements for water, sanitation, access roads, electrification and cleanliness required for proper and efficient execution of work. The planning, setting and construction of these buildings shall have the approval of the Engineer & the contractor shall keep them tidy, clean and in sanitary condition to the satisfaction of Engineer.

C-19.3 After completion of work the contractor shall promptly dismantle, the distribution and other facilities that may have been erected, at his own cost and clear the area to the satisfaction of the Engineer and hand over the same to the Engineer.

C-20.0 **POWER & WATER :-**

C-20.1 The Construction Power shall be provided at one point on chargeable basis and recovery shall be made on actuals at the rate prevailing at the time of drawl of

power from RA bills as per Customer/BHEL norms. The contractor shall have to make their own arrangements, at their cost for distribution to various locations for their works including proper switch/fuse units, distribution boards, cables, poles etc. to ensure safety of men and equipment. Where required, the contractor shall employ diesel operative equipment in addition to electric operated ones to ensure timely completion of work.

In case BHEL is not able to supply power, contractor has to make his own arrangement and take a separate connection for all construction works.

BHEL shall not be responsible for any inconvenience caused due to any failure of lighting and power supply and no compensation for delay in works can be claimed by the contractor due to such non-supply on the grounds of idle labour, machinery or any other grounds. The contractor should ensure that the work in critical areas is not held up in the event of lighting and power breakdown and for the same he should have some stand by arrangement at his cost. In the event of breakdown in the electric supply, if the progress of work is hampered, it will be the responsibility of the contractor to step up the progress after restoration of electric supply so that over all progress of work is not affected. The contractor shall make proper arrangement of illumination at work place while working in late hours or in darkness.

C-20.2 Unless stated otherwise in the scope, The contractor shall make his own adequate arrangement for procuring clear water to be used in works at his own cost. However, water if available may be supplied to the contractor at one point on chargeable basis and recovery shall be made on actuals at the rate prevailing at the time of drawl of water from RA bills as per Customer/BHEL norms.

C-21.0 **TEMPORARY WORKSHOP, STORES, CONSUMABLES ETC:**

The contractor shall during the progress of work, provide, erect and maintain at his own expenses all necessary temporary workshops, stores, consumables, offices etc. required for the proper and efficient execution of the work. The planning, setting & erection of these buildings shall have the approval of the Engineer and the contractor shall at all time keep them tidy & in a clean and sanitary condition on to the entire satisfaction of the Engineer.

C-22.0 **MATERIALS:**

C-22.1 The contractor shall at his own expenses, provide all materials required for the work. All materials to be provided by the contractor shall be in conformity with the specifications laid down in the contract & the contractor shall, if

requested by the Engineer, furnish proof to the satisfaction of the Engineer that the materials so comply.

C-22.2 The contractor shall, at his own expenses and without delay, supply to the Engineer samples of materials proposed to be used in the works. The Engineer shall within seven days of supply of samples or within such further period as he may require, intimate to the contractor in writing, whether samples are approved by him or not. If samples are not approved, the contractor shall forthwith arrange to supply to the Engineer for his approval fresh samples complying with the specifications laid down in the contract. Any delay in approval of samples (original or fresh ones) shall not make the contractor eligible for any compensation.

C-22.3 The Engineer shall have full powers to require removal of any or all of the materials brought to site by the contractor which are not in accordance with the contract specifications or do not conform in character or quality to samples approved by him. In case of default on the part of contractor in removing rejected materials, the Engineer shall be at liberty of have them removed by other means. The Engineer shall have full powers to procure other proper materials to be substituted for rejected materials and in the event of the contractor refusing to comply, he may cause the same to be supplied by other means. All costs, which may attend upon such removal and/or substitution shall be borne by the contractor**.** In such cases, handling charges @ 15% per annum or 1.25% per month or part thereof will be recovered from the contractor in addition to the actual procurement cost of material. The period for imposing handling charges is to be reckoned from the date of making payment / LR for lifting material to / by Subcontractor from authorized source, whichever is earlier to

a) The date of LR for dispatch of finished product by the supplier / fabricator.
b) Till date of consumption by the contractor as recorded in the MB.

C-22.4 The contractor shall indemnify BHEL, its representative or employees against any action, claim or proceeding relating to infringement or use of any patent or design or any alleged patent or design rights and shall pay any royalties or other charges which may be payable in respect of any article or materials or part thereof included in the contract. In the event of any claim being made or action being brought against BHEL or any agent, servant or employee of BHEL in respect of any such matters as aforesaid, the contractor shall immediately be notified thereof, provided that such indemnity in complying with the specific directions issued by BHEL but the contractor shall by any royalties or other charges payable in respect of any such use, the amount so

paid being reimbursed to the contractor only if the use was the result of any drawings and/or specifications issued after submission of the tender.

C-22.5 All charges on account of octroi, royalty and all other taxes & duties on materials obtained for the works from any source shall be borne by the contractor.

C-22.6 The Engineer shall be entitled to have tests carried out as specified in the contract for any materials supplied by the contractor other than those for which, as stated above, satisfactory proof has already been furnished, at the cost of the contractor & the contractor shall provide at his expenses all facilities which the Engineer, may require for the purpose. If no test are specified in the contract, and such tests are required by the engineer, the contractor shall provide all facilities required for the purpose and the charges for these tests shall be by the contractor only. The cost of materials consumed in tests shall be borne by the contractor in all cases except when otherwise provided.

C-23.0 **GENERAL:**

C-23.1 Material required for works, shall be stored by the contractor only at places approved by the Engineer. Proper storage and safe custody of material including construction stores shall be the responsibility of the contractor for which no charges shall be claimed by the contractor.

C-23.2 BHEL's officials concerned with the contract shall be entitled at any time to inspect and examine any materials intended to be used in or on the works, either on the site or at factory or workshop or other place(s) where such materials are assembled, fabricated, manufactured or at any place(s) where these are laying or from which these are being obtained and the contractor shall give such facilities as may be required for such inspection and examination.

C-23.3 All materials brought to the site shall become and remain the property of BHEL and shall not be removed off the site without the prior written approval of the engineer. But whenever the works are finally completed and advance, if any, in respect of any such material is fully recovered, the contractor shall at his own expense forthwith remove from the site all surplus material originally supplied by him and upon such removal, the same shall revert in and become the property of the contractor.

C-24.0 **DELAY AND EXTENSION OF TIME:**

If, in the opinion of the Engineer, the work is delayed

i) by reason of abnormally bad weather, or

ii) by reason of serious loss or damage by fire, or

iii) by reason of civil commotion, local combination of workmen, strike or lockout, affecting any of the trades employed on the work, or

iv) by delay on the part of the agency or tradesman engaged by the BHEL in executing work not forming part of the contract, or

v) by reason of any other cause which in the absolute discretion of the Engineer is beyond the contractor's control, then in any such case, the Engineer (or higher authority) may make fair and reasonable extension in the completion dates of the individual items of work of the contract as whole. Such extension which will be communicated to the contractor by the Engineer in writing shall be final and binding on the contractor. No other claim in this respect for compensation, idle labour or otherwise howsoever is admissible. Upon the happening of any such event causing delay the contractor shall immediately give notice thereof in writing to the Engineer but shall nevertheless use constantly his best endeavour to prevent or make good the delay and shall do all that may reasonably be required to the satisfaction of the Engineer to proceed with the work.

Above clause No. C-24.0 stands deleted. Please refer Annexure to conditions of contract for civil

C-25.0 **COMPENSATION/ PENALTY FOR DELAY IN COMPLETION:**

If the contractor fails to complete the works within the specified contractual period or extension of time granted by the Engineer, the BHEL shall have the right to deduct liquidated damage/penalty @ 0.5% of the contractual value per week of delay or part thereof, subject to a maximum of 10% of the contract value along with applicable GST (if any) on LD . Once the maximum limit of delay is reached (i.e. 20 week of delay) BHEL may consider termination of the contract and forfeit the Security deposit without prejudice to the other remedies under the contract. Amended/ revised contract value (Excluding ORC, Extra Works, Supplementary/ Additional Items and PVC) shall be considered for calculating LD/ penalty.

C-26.0 PRICE VARIATION:

DELETED

DELETED

Above clause No. C-26.0 stands deleted. Please refer Annexure to conditions of contract for civil works.

C-27.0 **OVER RUN CHARGES:**

C-27.1 DELETED

Above clause No. C-27.0 stands deleted. Please refer Annexure to conditions of contract for civil works.

C-28.0 **OCTROI AND OTHER DUTIES:**

C-28.1 All charges on account of Octroi and/or other duties on materials obtained for the work shall be borne by the contractor.

C-29.0 **TERMS OF PAYMENT:**:

C-29.1 The contractor shall be paid monthly running bill to a maximum of 95% (retaining 5% from each running bill) of value of the works actually executed on site provided the work has been executed to the satisfaction of the Engineer. The payment for tender work shall be admitted progressively on completion of work. However, work is to be executed as per time schedule prescribed by Engineer-In-Charge. In case of delay due to contractor, payment made equivalent to amount of work done in tower, equipment and trenches will be withheld from successive bills. From payable amount recoveries such as security deposit, income tax etc. would be made as per rule. The certificate of the Engineer regarding such approval and passing of sums so payable shall be final and conclusive against the contractor

C-29.2 The Engineer shall after a measured bill allow and certify payment to the contractor on the basis of abstract measurement bill submitted by contractor. However, the usual recoveries would be effected from bill.

C-29.3 Any certificate relating to the work done may be modified by any subsequent interim certificates or by the final certificate and no certificate of the Engineer supporting an advance payment shall of itself be conclusive evidence that any work or materials to which it relates are in accordance with the contract.

C-29.4 All intermediate payments shall be regarded as advance against the final payment only and shall not be considered as an admission of the due performance of the contract or any part thereof in any respect of the occurring of any claim whatsoever. Such intermediate payments shall not conclude, determine or effect in any way the powers of the Engineer as to the final settlement and adjustment of the account of otherwise, or in any way vary of affect the contract. To this affect the contractor shall submit the final bill, which shall contain the complete up-to-date measurements for the total work done.

C-29.5 The conditions for the release of last 5% retention money shall be as follows:

C-29.5.1 2.5% payment shall be released along with the final bill on completion of total work as certified by BHEL site.

C-29.5.2 Balance 2,5% of payment shall be released on completion of guarantee period. However these retention money can be released on submission of B.G. of equivelent amount valid till guarantee period.

The contractor shall guarantee the work under the scope of the contract for a period of 12 months from the date of start of the guarantee period as certified by BHEL site (i.e completion of total work under the scope and or taking over by BHEL/owner),and shall rectify free of cost all defects due to faculty supply or work done. In case the contractor fails to repair/ replace the defective work within the time specified by BHEL, BHEL may proceed to undertake such repair/replace such defective work at contract's risk and cost without prejudice to any other right and recover the sum from security deposit/BG/ any dues.

Above clause No. C-29.5.2 shall be read in conjunction with clause no. C-2.0.

C-29.6 Income Tax at the prevailing rate on gross value of work done and applicable surcharge shall be deducted from the running account bills unless exempted by the Income Tax Office.

C-29.7 **The prices to be quoted by bidder should be EXCLUSIVE of GST**

Please refer Annexure to conditions of contract for civil works for detail terms and conditions of taxes & duties.

C-30.0 **CEMENT AND STEEL: (Pl. also refer Annexure to conditions of contract for civil works for issue of Cement and steel in case of BHEL supply as mentioned in BOQ)**

C-30.1 The theoretical quantity of cement to be used in works shall be calculated on the basis of the designed mix concrete and as per CPWD norms for all the other items based on latest edition in use in CPWD works Delhi at the time of submitting tender.

C-30.2 The theoretical weight of reinforcing steel shall be derived on the basis of sectional weights as per relevant Indian Standards & the lengths for purpose of consumption/reconciliation and payment. No claim shall be entertained from the contractor as such for the difference in theoretical/actual weight of steel during reconciliation or payment for fixing.

C-30.3 Clogging of cement and rusting of steel should be avoided to the maximum extent possible without hampering the continuity of construction/erection. In case due to any cause, attributable to contractor such clogging of cement and/or rusting of steel occurs rendering the same unusable, the contractor shall remain responsible to make good the loss at his own cost.

C-30.4 The contractor shall plan & arrange procurement of steel, cement and other materials as required every month in consultation with the Engineer. Failing compliance to this requirements, further execution of work of the contractor by the BHEL may be suspended and no compensation for delay in the execution of the work or suspension of the works caused on account of the above shall be entertained.

C-30.5 No materials shall be issued to the contractor except for those specified in Section C-22.0. Contractor shall maintain record of day to day issue and consumption of materials at site like cement, bitumen, lead, paint etc. The contractor will have to make his own arrangements at his own cost for procurement of all materials as required for the works and of such quality as per specification and acceptable to the Engineer.

C-30.6 In case any additional expenditure is incurred in work arising out of the faulty execution of such work by the contractor, such additional expenditure shall be borne by the contractor.

C-31.0 **QUALITY ASSURANCE:**

C-31.1 The contractor has to establish at site the field testing facilities for testing of civil construction materials & concrete cubes and other works as required under the approved Field Quality Plan of BHEL/its customer for ensuring the proper quality, grade and strength of the materials used in the construction. If further test is required by the Engineer to be carried from outside laboratory, the cost of the same shall be borne by contractor (copies of the Field Quality Plan & other Inspection & Test procedures to be followed shall be issued after mobilisation by the sub-contractor).

C-31.2 The contractor has to arrange for calibration of all test equipment/instruments brought by him as per the requirement of BHEL calibration procedure as directed by the Engineer. The test certificates/calibration certificates shall have to be submitted. BHEL site shall control use of these equipment/ instruments by allotting control number and permitting use of only those equipment/ instruments which are under calibrated status.

C-32.0 **CLEARANCE OF SITE AND REPAIRS:**

C-32.1 The contractor has to clear the site/area where mechanical and electrical erection work is to be commenced/or in progress. The contractor shall remove construction materials and equipment lying in the vicinity and causing

obstruction in the erection work within 24 hours notice. In case, he fails to clear the site, this will be done at his risk and cost by BHEL. For the works executed by the contractor, the deficiencies pointed out must be attended within specified period.

C-33.0 **PROTECTION OF WORK:**

C-33.1 The contractor shall have total responsibility of protecting his works till it is finally taken over by the Engineer. No claim will be entertained by the Engineer for any damage or loss to the contractor's works and the contractor shall be responsible for the complete restoration of damaged works to its original condition to comply with specifications and drawings. Should any such damage to the contractor's works occur because of other party not under his supervision or control, the contractor shall make his claim directly with the party concerned. The contractor shall not cause any delay in the repair of such damaged works because of any delay in the resolution of such disputes. The contractor shall proceed to repair the work immediately and no cause thereof will be assigned pending resolution of such disputes.

C-34.0 **RECORD FOR MATERIALS CONSUMED:**

C-34.1 The contractor has to maintain and furnish to the Engineer the record of materials procured and consumed in the works for each activity. The statement showing the theoretical vis-s-vis actual consumption of specified materials, such as structural/reinforcement steel, cement, bitumen, lead, paint etc. shall be enclosed along with the running bills submitted by the contractor. Contractor has to also furnish the test results of the concrete cubes, bricks, stone aggregate and other materials used in work as per IS specifications along with the running bills.

C-35.0 **SECURED ADVANCE ;**

C-35.1 DELETED

a)
b)
c)
d)
e)
f)

C-35.2 DELETED

Above clause No.C-35.0 stands deleted. Please refer Annexure to conditions of contract for civil works

ANNEXURE TO CONDITIONS OF CONTRACT FOR CIVIL WORKS

The following terms and conditions shall form a part of the tender document. If any discrepancies found between below mentioned clauses and clauses in the Conditions of Contract for Civil Works, Doc.No.-TB-Civil-GCC, Rev-02, the clauses mentioned in this annexure shall prevail.

A. Condition of Contract for Civil works (DOC. NO. – TB-Civil-GCC, Rev-02):

A. 1.0: GENERAL INSTRUCTION

1.1 **All pages of the tender documents shall be duly signed, stamped and submitted along with the offer in token of complete acceptance thereof.** The information furnished shall be complete by itself. The tenderer is required to furnish all the details and other documents as required in the following pages.

1.2. Tenderers are advised to study all the tender documents carefully. Any submission of tender by the tenderer shall be deemed to have been done after careful study and examination of the tender documents and with the full understanding of the implications thereof. Should the tenderers have any doubt about the meaning of any portion of the Tender Specification or find discrepancies or omissions in the drawings or the tender documents issued are incomplete or shall require clarification on any of the technical aspect, the scope of work etc., tenderer shall at once, contact the authority inviting the tender well in time (so as not to affect last date of submission) for clarification before the submission of the tender. Tenderer's request for clarifications shall be with reference to Sections and Clause numbers given in the tender documents. The specifications and terms and conditions shall be deemed to have been accepted by the tenderer in his offer. Non-compliance with any of the requirements and instructions of the tender enquiry may result in the rejection of the tender.

A.2.0 PROCEDURE FOR SUBMISSION OF SEALED TENDERS

A.2.1 Bidders may please refer Cl no. 02 to Cl no. 03 of the Notice inviting tender.

A.2.2 The tenders received after the specified time of their submission shall be treated as 'Late Tenders' and shall not be considered under any circumstances.

A.2.3 Tenders shall be opened by the officers concerned of BHEL at the time, date and venue as specified in the tender enquiry. Tenderer or their authorized representative may witness the bid opening.

A.2.4 The tenderer shall closely pursue all the clauses, specifications and drawings indicated in the Tender Documents before quoting. Should the tenderer have any doubt about the meaning of any portion of the Tender Specifications or find discrepancies/omission in the drawings or the tender documents issued are incomplete or shall require clarification on any of the technical aspect, scope of work etc. he shall at once contact the authority inviting the tender for clarification before the submission of the tender.

A.2.5 Before submission of offer, the tenderer are advised to inspect the work & the environments and be well acquainted with the actual working and other prevalent conditions, facilities available, sourcing of material and labour, means of transport and access to site, accommodation, etc. No claim will be entertained later on the grounds of lack of knowledge on any of these conditions/ resources.

A.2.6 Tenderer must fill up all the schedules and furnish all the required information as per the instructions given in various sections of the tender specification. Each and every page of the Tender Specification must be SIGNED AND SUBMITTED ALONG WITH THE OFFER by the Tenderer in token of complete acceptance thereof the information furnished shall be complete by itself.

A.2.7 The tenderer shall quote the rates in English Language and international numerals. Total price offered should be entered in figures as well as in words. For the purpose of the tender, the metric system of units shall be used.

A.2.8 **The tenderer shall quote a percentage above/ below/At Par the rates shown in the "Bill of Quantities Cum Price Schedule (Annexure-I)" of subject tender.**

A.2.9 **The quoted percentage will apply to the individual items of "Annexure-I i.e Bill of Quantity Cum Price Schedule" uniformly.**

A.2.10 All entries in the tender shall either be typed or be written legibly in ink. Erasing and overwriting are not permitted and may render such tender liable for rejection. All cancellations and insertions shall be duly attested by the tenderer.

A.2.11 The tenderer must provide the registered e-mail of their registered office along with the addresses and authorised phone/mobile nos.

A.3.0 ADJUSTMENT PRICE DISCREPANCY (IES): - Not Applicable being e procurement.

A.4.0 EVALUATION OF TECHNICAL BIDS

4.1 Technical Bids submitted by the tenderer will be opened first and evaluated for fulfilling the Pre-Qualification criteria and other conditions in NIT/Tender documents, based on documentary evidences submitted along with the offer.

4.2 In case the same qualifying experience is claimed by more than one bidder due to subletting of work by main contractor to subcontractor (s) then following conditions shall be applicable.

a) For labour + consumable contract without material and T&P:
Benefit of work experience shall be given to the subcontractor who has actually executed job and not to the contractor offloaded down the line.

b) For contract with complete scope i.e. with materials, T&P, labour and consumable:
   i) Benefit of work experience shall be given to the subcontractor who has actually executed job and not to the contractor offloaded down the line.

   ii) If the contractor offloads the labour and/or T&P portion only, Benefit of work experience shall be given to the main contractor and not to the subcontractor who has executed only as labour supply contractor

The bidder's qualification shall be subject to submission of documentary proof. BHEL reserves the right to ask for further proofs including submission of TDS certificates/ for the said job.

4.3 In case the qualifying experience is claimed by private organizations based on Work Order and completion certificates from another private organization, BHEL reserves the right to ask for further proofs including submission of TDS certificates/ form 26AS

/bills for the said job.

4.4 Credentials of all the bidders participating in open tender will be scrutinized thoroughly by the nominated committee w.r.t. the pre-qualifying requirement for the tender.

4.5 Details of qualifying work(s) executed by the bidder will be forwarded to the principle employer for verification of the work with respect to completion, commencement & completion date, scope and value of the work executed. Performance feedback of the bidder will also be sought from the principle employer.

4.6 BHEL may conduct onsite verification of at least one of the qualifying work to verify completion of the work and evaluate capability and performance of the bidder.

4.7 The bidder representative may be called for the discussion with the committee. His originals may be verified by the committee. In addition to above their organization chart and detailed list of manpower, tools & plants and technical capability may be discussed and ascertained by the committee.

5.0 EVALUATION OF PRICE BIDS

5.1 Price Bids of unqualified bidders shall not be opened.

5.2 The offers will be evaluated on the basis of total price basis (refer "BILL OF QUANTITY AND PRICE SCHEDULE) as shown in the price bid.

5.3 Reasons for rejection of the bid shall be intimated in due course after issue of LOI/LOA to successful bidder and receipt of unconditional acceptance of LOI /LOA from the successful bidder

5.4 In case of electronic Reverse Auction, the unqualified bidders shall not be allowed to participate in reverse auction.

A.6.0 DOCUMENTS TO BE ENCLOSED:

Full information shall be given by the tenderer in respect of the following.

6.1 Tenders shall be signed by persons duly authorized/empowered to do so. An attested copy of the Power of Attorney to be submitted in all cases except where the sole proprietor is the signatory to the tender documents

6.2 *PERMANENT ACCOUNT NUMBER:*

Certified copies of Permanent Account Numbers as allotted by Income Tax Department for the Company / Firm / Individual Partners, etc. shall be furnished along with tender.

6.3 AUDITED *BALANCE SHEET AND INCOME TAX RETURN*:

Copy of Audited Balance sheets and income tax return for last three financial years (financial years as specified in PQR)

6.4 *SOLVENCY CERTIFICATE:*

If asked in NIT, bidder should submit solvency certificate (not older than 12 months from date of tender notification) issued by any scheduled bank.

6.5 *DOCUMENT RELATED TO INCORPORATION OF BUSINESS ENTITY:*

6.5.1 *IN CASE OF INDIVIDUALTENDERER:*

His/her full name, address and place & nature of business.

6.5.2 *IN CASE OF PARTNERSHIP FIRMS:*

The names of all the partners with address. A copy of the partnership deed/instrument of partnership duly certified by the Notary shall be enclosed.

6.5.3 *IN CASE OF COMPANIES:*

Date & place of registration including date of commencement certificate in case of Public Companies and the nature of business carried on by the company. Certified copies of Memorandum and Articles of Association are also to be furnished.

6.6 Offer forwarding letter over the letterhead

6.7 *Declaration sheets (As per Prescribed format) over the letter head*

6.8 *No Deviation certificates (As per Prescribed format) over the letterhead*

6.9 GST Registration certificate

All the data required to be enclosed with the tender need to be furnished neatly typed, signed & stamped in the given formats only (in the form of separate sheets) failing which the tender may be considered as incomplete and is liable for rejection. Documentary proof wherever necessary also need to be enclosed.

A.7.0 VALIDITY OF OFFER

The rates in the Tender shall be kept valid for acceptance for a minimum period of **Four Months** from latest due date of offer submission (including extension(s), if any). In case BHEL (Bharat Heavy Electricals Limited) calls for negotiations, such negotiations shall not amount to cancellation or withdrawal of the original offer which shall be binding on the tenderer.

A.8.0 REJECTION OF TENDER & OTHER CONDITIONS:

8.1 The decision of acceptance of tender will rest with BHEL which does not bind itself to accept the lowest tender or any tender and reserves to itself full rights for the following without assigning any reasons whatsoever:

(a) To reject any or all of the tenders.

(b) To split up the work amongst two or more Tenderer as per NIT

(c) To award the work in part as per NIT

(d) In either of the contingencies stated in (b) and (c) above to modify the time for completion suitably.

8.2 Conditional tenders, unsolicited tenders, containing abnormally low/ unworkable rates & amounts, tenders which are incomplete or not in the form specified or defective or have been materially altered or not in accordance with the tender conditions, specifications etc. are liable to be rejected.

8.3. Tenders are liable to be rejected in case of unsatisfactory performance of the tenderer with BHEL, or tenderer under suspension (hold / banning / delisted) by any unit / region / division of BHEL or tenderers who do not comply with the latest guidelines of Ministry / Commissions of Govt. of India. BHEL reserves the right to reject a bidder in case it is observed that they are overloaded and may not be in a position to execute this job as per the required schedule in line with 'NIT'. The decision of BHEL will be final in this regard.

8.4 In case of any adverse information is received concerning performance, capability or conduct of the tenderer after issue of tender enquiry or opening of tender or award of work, BHEL reserves the right to reject the offer at any stage as deemed fit.

8.5 Offers with inadequate Tools & Plants, Manpower Deployment Plan, and Method Statement are liable for rejection.

8.6 If a tenderer who is a proprietor expires after the submission of his tender or after the acceptance of his tender, BHEL may at its discretion, cancel such tender. If a partner of a firm expires after the submission of the tender or after the acceptance of the tender, BHEL may cancel such tender at its discretion unless the firm retains its character.

8.7 BHEL will not be bound by any Power of Attorney granted by the tenderer or by changes in the composition of the firm made subsequent to the execution of the contract. BHEL may, however, recognise such Power of Attorney and changes after obtaining proper legal advice, the cost of which will be chargeable to the contractor concerned.

8.8 If the tenderer deliberately gives wrong information in his tender, BHEL reserves the right to reject such tender at any stage or to cancel the contract, if awarded, and forfeit the Earnest Money/Security Deposit/any other moneys due.

8.9 Canvassing in any form in connection with the tender is strictly prohibited and the tenders submitted by the tenderer who resorts to canvassing are liable to be rejected.

8.10 In case the Proprietor, Partner or Director of the Company / Firm submitting the Tender, has any relative or relation employed in BHEL, the authority inviting tender shall be informed to the fact as per specified format along with the offer, failing this, BHEL may, at its sole discretion reject the tender or cancel the contract and forfeit the Earnest Money/ Security Deposit.

8.11 The successful tenderer should not sub-contract the part or complete work detailed in the tender specifications without written permission of BHEL's Site In charge/ Sector Head. For this the contractor shall submit request application to site in charge supported by credentials (financial and technical) and resource mobilisation schedule of such sub-contractor. Such request are to be considered in consultation with end user/ultimate customer (if applicable) and subject to satisfactory credentials, fund flow arrangement between them, HSE and other contractual and statutory obligations. The tenderer is solely responsible to BHEL for the work awarded to him.

8.12 The Tender submitted by a tenderer shall become the property of BHEL who shall be under no obligation to return the same to the bidder. However unopened price bids and late tenders shall be returned to the bidders.

8.13 unsolicited discount received after the due date and time of Bid Submission shall not be considered for evaluation. However, if the party who has submitted the unsolicited discount/rebate becomes the L-I party, then the awarded price i.e contract value shall be worked out after considering the discount so offered.

8.14 BHEL shall not be liable for any expenses incurred by the bidder in the preparation of the tender irrespective of whether the tender is accepted or not.

A.9.0 <u>NO DEVIATIONS ARE ACCEPTABLE</u>: -

Offers with deviations are likely to be rejected. However, if the bidder insists on any technical or commercial deviations from the specifications and / or tender conditions, **the price implication, if any, of withdrawing the deviations must be submitted along with the price bid in a separate sealed envelope** super-scribed "**PRICE IMPLICATION FOR WITHDRAWAL OF DEVIATIONS**". No price implication for withdrawal of deviation shall be accepted at a later date, after opening of technical bid.

A.10.0 Consortium**/** JV bidding is not allowed under this NIT.

B. EARNEST MONEY DEPOSIT

Every tender must be accompanied by the prescribed amount of Earnest Money Deposit (EMD) mentioned in NIT.

1. Mode of EMD deposit:

Every tender must be accompanied by the prescribed amount of Earnest Money Deposit (EMD) mentioned in NIT.

1. Mode of EMD deposit:

EMD can be submitted in any one of the following modes:

i) Cash deposit as permissible under the extant Income Tax Act (before tender opening),

ii) Electronic Fund Transfer credited in BHEL account (before tender opening). Details of BHEL account mentioned in tender document.

iii) Banker's cheque/Pay order/Demand Draft, in favour of 'BHEL' and payable at New Delhi (Along with offer)

iv) Fixed Deposit Receipt (FDR) issued by schedule Banks/Public Finance Institutions as defined in the companies ACT (FDR should be in the name of the contractor, a/c BHEL

v) In case total EMD amount is more than Rs. 2 Lakh, the amount in excess of Rs. 2 lakh may be accepted in the form of Bank Guarantee from scheduled bank. The Bank Guarantee in such cases shall be valid for at least six months.

No other form of EMD remittance shall be acceptable to BHEL.

Note: The Submission of EMD is compulsory for subject tender. In case requisite Amount of EMD not submitted by the bidder along with offer or before technical bid opening, the offer shall not be considered for evaluation and the offer shall be rejected.

2. Forfeiture of EMD

EMD by the bidder will be forfeited as per NIT conditions, if

i) After opening the tender and within the offer validity period, the bidder revokes his tender or makes any modification in his tender which is not acceptable to BHEL.

ii) The contractor fails to deposit the required Security deposit or commence the work within the period as per LOI/contract.

3. EMD by the tenderer shall be withheld in case any action on the tenderer is envisaged under the provision of extant "Guidelines on Suspension of business dealing with supplier/contractors" and forfeited/ released based on the action as determined under these guidelines.

4. In the case of unsuccessful bidders, the Earnest Money will be refunded to them within a reasonable time after award of work.

5. EMD shall not carry any interest.
6. EMD of successful bidder shall be retained as part of Security Deposit.

7. Bidders may please note that "One Time EMD" provision stands deleted. Hence, bidders who have deposited Rs. 2 Lakh as 'One Time EMD' with BHEL are also required to submit the requisite amount of EMD.

8. **No MSE benefits shall be given to MSEs bidder for WORKS CONTRACT. Please refer clause no. P (facilities provided to MSEs) for detail.**

C. SECURITY DEPOSIT

Security Deposit means the security provided by the Contractor towards fulfilment of any obligations in terms of the provision of the contract.

1. Upon acceptance of Tender, the successful Tenderer should deposit the required amount of Security Deposit for satisfactory completion of work. **The total amount of Security Deposit will be 5 % of the Contract Value. EMD of the successful tenderer shall be converted and adjusted towards the required amount of Security Deposit.**

2. Mode of Security deposit:
   The security Deposit should be furnished **before start of the work** by the contractor.

   "Bidders agrees to submit performance security required for execution of the contract within the time period mentioned. In case of delay in submission of Performance security, enhanced performance security which would include interest (SBI rate + 6%) for the delayed period, shall be submitted by the bidder. Further, if performance security is not submitted till such time the first bill becomes due, the amount of performance security due shall be recovered as per terms defined in NIT / Contract, from the bills along with due interest".

   The balance amount to make up the required Security Deposit of 5% of the contract Value may be furnished in any of the following forms:

   i) Cash (as permissible under the extant Income Tax Act)

   ii) Local cheques of scheduled banks (subject to realization) / Pay Order / Demand Draft / Electronic Fund Transfer, in favour of BHEL.

   iii) Bank Guarantee from Scheduled Banks / Public Financial Institutions as defined in the Companies Act. The Bank Guarantee format for Security Deposit shall be in the prescribed formats enclosed with general conditions of contract.

   iv) Fixed Deposit Receipt issued by Scheduled Banks / Public Financial Institutions as defined in the Companies Act. The FDR should be in the name of the contractor, A/C BHEL and duly discharged on the back.

   v) Securities available from Indian Post Offices such as National Savings Certificates, Kisan Vikas Patras etc. (Certificates should be held in the name of Contractor furnishing the security and duly endorsed/hypothecated/pledged, as applicable, in favour of BHEL and duly discharged on the back).

   (NOTE: BHEL will not be liable or responsible in any manner for the collection of interest or renewal of the documents or in any other matter connected therewith)

3. **Submission of Security Deposit:**

   i) At least 50 % of the required Security Deposit, including the EMD, shall be submitted before start of work. Balance of the Security Deposit can be submitted by way of deduction of 10% of the gross amount progressively from each running bills of the contractor till the total amount of the required Security Deposit is collected.

   ii) If the value of work done at any time exceeds the contract value, the amount of Security Deposit shall be correspondingly enhanced and the additional Security Deposit shall be immediately deposited by the Contractor or it shall be recovered from payment/s due to the Contractor.

   iii) The recoveries made from running bills (cash deduction towards balance SD amount) can be released against submission of equivalent Bank Guarantee in acceptable form, but only once, before completion of work, at the discretion of BHEL.

4. The BG shall be submitted only through the Banker. Along with the BG, the Bank shall also furnish a letter of confirmation (in the prescribed formats enclosed with general conditions of contract).

5. The validity of the Bank Guarantee furnished towards Security Deposit shall be up to three months more than the period of completion of work as stipulated in the LOI and the same will be kept valid by proper renewal till the completion of the work.

6. BHEL reserves the right of forfeiture of Security Deposit in addition to other claims and penalties in the event of the contractor's failure to fulfil any of the contractual obligations or in the event of termination of contract as per terms and conditions of the contract. BHEL reserves the right to set off the Security Deposit, against any claims of any other contracts with BHEL.

7. **Conditions for acceptance of bank guarantees**

   Contractors are advice to obtain Bank Guarantee preferably from any of the following BHEL consortium banks

Sl. No.	**Name of Bank**	Sl. No.	**Name of Bank**
1	State Bank of India	11	Punjab National Bank
2	Canara Bank	12	Union Bank of India
3	IDBI Bank Limited	13	Yes Bank Limited
4	ICICI Bank Limited	14	RBL Bank Ltd.
5	HDFC Bank Limited	15	Standard Chartered Bank
6	Axis Bank	16	Indian Overseas Bank
7	IndusInd Bank Limited	17	Kotak Mahindra Bank Limited
8	Bank of Baroda	18	Federal Bank Limited
9	Exim Bank	19	Hongkong and Shanghai Banking Corporation Ltd
10	Indian Bank		

Bank Guarantees from Banks outside BHEL's consortium shall be as below:

The Bank Guarantees of all Public sector banks can be accepted (in addition to consortium banks)

The Bank Guarantees of Co-operative banks shall not be accepted.

Bank Guarantees of other than consortium bank and public sector bank can be accepted subject to an overall exposure limit (at New Delhi) of Rs. 10 crores for banks with networth of more than Rs. 500 crores as on last balance sheet date and Rs 5 crores for banks with net worth between Rs. 350 to Rs 500 crores (A certificate and copy of latest Balance Sheet to be given by the Bank at the time of submission of Bank Guarantees).

In case of private sector banks a clause to be incorporated in the text of Bank Guarantee that it can be enforceable by being presented at any branch of the bank.

In case of foreign vendors the bank guarantees issued by foreign banks may be confirmed by our consortium bank in India.

In case of Bank Guarantees given by Non-Consortium banks (Private sector or Public sector), the Bank Guarantees are to be enforceable in New Delhi or the town/ city in which the sector office is located.

8. **RETURN OF SECURITY DEPOSIT:**

If the contractor duly performs and completes the work in all respects to the entire satisfaction of BHEL and presents an absolute "No demand certificate", returns properties belonging to BHEL, taken, borrowed or hired by him for carrying out the said works, and furnishes performance bond BG in the prescribed proforma, Security Deposit will be released to the contractor after deducting all costs, expenses and other amounts that are to be paid to BHEL under this contract or other contracts entered into with the contractor. It may be noted that in no case the Security Deposit shall be refunded/released prior to passing of final bill.

D. Bank Account Details for submission of EMD/ Security Deposit through electronic fund transfer mode.

NAME OF THE COMPANY	**BHARAT HEAVY ELECTRICALS LTD**
ADDRESS OF THE COMPANY	**TRANSMISSION BUSINESS GROUP, 10TH FLOOR, JOY TOWER, PLOT NO. *C-20*, 1/1A, C BLOCK, PHASE 2, INDUSTRIAL AREA, SECTOR-62, NOIDA – 201301 (U.P.)**
NAME OF BANK	**STATE BANK OF INDIA**
NAME OF BANK BRANCH	**CAG-II NEW DELHI (17313)**
CITY	**NEW DELHI**
ACCOUNT NUMBER	**00000030206227732**
ACCOUNT TYPE	**CASH CREDIT**
IFSC CODE	**SBIN0017313**

E. Overall price variation-

The individual quantity can vary to any extent or may be deleted for which no compensation will be payable to the contractor and the rates will remain firm. Also the rate of each item remains firm as long as the variation in the total value of work executed under the contract including extra items if any remains within plus/minus 30 percent of the contract value. In case the actual value of executed work including extra work on completion of work becomes less than 70% of the basic/original contract value than the following method shall be adopted.

The actual executed value shall be raised by 7% (For arriving at the final payment against work executed) subject to the condition that total value of work executed plus increase by 7% as above shall be limited to 70% of the basic/original contract value.

The rate quoted shall be firm irrespective of any upward variation in the contract price.

It is further clarified that the enhancement/rate revision on the basic rate as per PVC clause shall not be accounted for the purpose of operating this clause.

F. Clause no. C-25.0 "COMPENSATION/PENALTY FOR DELAY IN COMPLETION" stands deleted. Now this clause shall be read as below: -

In case the contractor fails to complete the project within the time specified in the tender specification or any extension thereof subject to force majeure condition, the contractor shall be liable to pay by way of LD/Penalty a sum equal to the half percent of the contract price, per calendar week or part thereof by which the commissioning of the project is delayed, subject to ceiling of 10 % of the contract price along with applicable GST (if any) on LD. Once the maximum limit of delay is reached (i.e. 20 week of delay) BHEL may consider termination of the contract and forfeit the Security deposit without prejudice to the other remedies under the contract.

If the contract is for more than one sub-station and the substations are completed and taken over by customer in stages, then the delays if any by the contractor for the substation completed and handed over may be accounted for the individual substation and LD leviable shall be computed based on the contract value of individual substation.

Amended/ revised contract value (excluding ORC, Extra Works, Supplementary/Additional Items and PVC) shall be considered for calculating LD/ penalty.

G. Clause No. C.29.7 "INCOME TAX/SALES TAX/WORKS TAX/VAT" stands deleted. Now this clause shall be read as below.

1. All taxes (except GST), duties , charges , royalties, cess and any other levies by Central/ State/local authorities for the execution of the contract shall be borne by the contractor and shall not be payable extra . Any increase of the same at any stage during execution of the contract shall be borne by the contractor. Quoted price of the same shall be inclusive of all such requirements.

2. Contractors have to make their own arrangement at their cost for completing the formalities, if required with relevant taxation authorities, for bringing their material, plant and machinery at site for the execution of the contract. Road permits / way bill, if required shall be arranged by the contractor.

3. The Contractor is responsible to furnish documentary evidence towards GST Registration of the State wherein the site is located or any other documents as per GST Act which may be required from time to time. BHEL will not be held to be responsible for any non-compliance of the Contractor in respect of GST laws as framed from time to time.

4. Goods and Service Tax (GST) will be reimbursed to the Contractor subject to the following conditions: -

   (i) Submission of valid GST Compliant Tax Invoice as per the GST Invoice Rules.

   (ii) The Invoice raised by the Contractor should indicate the BHEL GST Registration Number.

5. The GST amount shall get reflected within prescribed time limit in the GSTN for BHEL to avail the input credit. If the GST Credit is reversed/ denied/ delayed to BHEL due to non-receipt/delayed receipt of Services and/or tax invoice or due to expiry of timeline prescribed in GST law or due to any other factor for availing such Input Tax Credit (ITC) or for any other reason arising out of the act directly attributable to the Contractor, GST amount shall be recoverable from Contractor from any dues payable to the Contractor along with any interest levied/ leviable on BHEL.

6. Statutory variation, if any, on account of GST will be payable by BHEL at actuals on submission of documentary evidence.

7. TDS under Income Tax Act/ GST Act shall be deducted as per applicable rates unless Exemption certificate, if applicable, from the appropriate Authority is furnished to BHEL along with the Invoice.

8. **New Taxes & duties (Introduced after tender opening date):**

   If any new tax or duty is levied by the Central/State Government/Municipality/Local Authority and becomes directly applicable on items specified in the Bill of Quantities, full reimbursement shall be made subject to submission of documentation as per statute.

H. **Clause C-27.0 of "Over run charges"** under special conditions of contract is now deleted. No overrun charges are payable under the contract.

I. **Clause C-35.0 "secured advance"** under special conditions of contract is now deleted. No advance on materials shall be payable under the contract.

J. **Clause C-26.0 "Price Variation"** under special conditions of contract is now deleted and now this Clause should be read as below.

Prices will be firm for total contract period and extended period, if any, and no price escalation/ price variation will be applicable.

K. **REINFORCEMENT STEEL (APPLICABLE ONLY FOR BHEL FREE ISSUED STEEL):**

(i) The reinforcement steel for the works shall be supplied by BHEL as per BOQ. Hence under items of reinforcement steel in BOQ, the bidders are required to quote labour rates only. **(Applicable only for the items where BHEL supply is mentioned in the BOQ).**

(ii) The reinforcement steel shall be made available to the contractor within project area. The contractor shall collect these material form BHEL Store/ Storage yard. Loading and transportation from supplier stockyard to site is not in scope of the contractor. However, unloading, storage, watch & ward till handing over of complete work and lodging of insurance claim (if required) is included in the scope of bidder and deemed to be included in the quoted rates.

(iii) If due to Contractor's carelessness, negligence, non-observance of safety precautions, improper security arrangements or due to non-compliance of paper work needed for lodging insurance claim, damage to BHEL/its Customer's property and/or personnel should occur, and if BHEL is unable to recover its claim from the Insurance Company, the deficit will be recovered from the Contractor.

(iv) The steel issued to the contractor shall be mainly in standard length and section as received from the steel supplier. However, the contractors shall be bound to accept the steel in length as available. No claims for extra payment because of issue of non standard length will be entertained during execution.

(v) **RETURN OF STEEL**

All surplus steel and all wastage materials shall be taken back on weighment basis. Surplus, unused and untampered steel shall be stored diameter / section wise and returned separately at a place directed by BHEL / engineer incharge within the project area. Return of such materials will not be entitled to any handling and incidental charges. All wastage / scrap (including melting scrap, wastage, unusable) shall be returned diameter/ section wise to the stores and a receipt obtained for material accounting purposes.

a) CONSUMPTION:

The theoretical consumption of various section / diameter of reinforcement shall be based on approved construction drawing and bar bending schedule, approved laps, chairs & lugs. The weight shall be calculated considering the sectional weights as per Indian standards. No extra cost shall be payable to the contractor for any deviation in weights for the different procedures adopted for issue and calculation for the theoretical consumption including rolling tolerances. The consumption / wastage shall be determined as under:

I) Actual consumption = (QTY issued by BHEL) – (surplus QTY returned by the contractor).

II) Surplus =Un-tampered and unused quantity of steel returned by the contractor to BHEL supported by relevant documents

III) Wastage = actual consumption - theoretical consumption (as erected quantity)

(B) WASTAGE

Allowable wastage: (+5%) of the theoretical consumption shall be considered as allowable wastage.

Wastage is further classified as cut pieces [pieces of lengths 3 m and above] and scrap (including pieces of lengths less then 3 m) measured as per actual weighment basis.

Sl.	Reinforcement steel	Basis of issue & penal recovery
R-1	Theoretical consumption [without considering wastage and scrap of loss	Free
R-2	Wastage limited to plus five percent [+5%] of aforesaid theoretical consumption [r-1] towards allowable wastage [cut pieces plus scrap to be returned to BHEL]	Free
R-3	Wastage beyond five percent [+5%] of the theoretical consumption above (r-1).	Penal rate @ 50% over & above the procurement rate

L. RESPONSIBILITY OF CONTRACTOR IN RESPECT OF STATUTORY RULES / REGULATIONS PERTAING TO BOWC.

It shall be mandatory for the contractor to comply with Building and Other Construction Worker (Regulation of Employment and Conditions of Service) Act, 1996 and Rules of 1998 read with Building and other Construction Workers welfare Cess act, 1996 and Cess Rules.

It shall be the sole responsibility of the contractor to apply for a license to the Competent Authority under the Building and Other Construction Worker (Regulation of Employment and Conditions of Service) Act, 1996 and Rules of 1998 read with Building and other Construction Workers welfare Cess act, 1996 and Cess Rules and obtain proper certificate thereof by specifying the scope of its work. It shall also be responsibility of the contractor to furnish a copy of such certificate of license / permission to BHEL within 2 months from date of start of work at site or along with 1st RA bill whichever is earlier.

It shall be the responsibility of the sub-contractor to furnish the receipts / challans towards deposit of the cess together with the number, name and other details of beneficiaries (building or construction workers) engaged by the sub-contractor during the preceding month.

The onus shall lie on the contractor to register with the authorities and provide the details of the amount remitted to the authorities. In case the contractor fails to comply with the BOCW act, no payments shall be released to the contractor.

In case the customer owns the responsibility of compliance of BOCW act and deducts the amount from BHEL, the same shall be deducted from the RA bills of the contractor.

In the event of any penalty or other implication due to non-compliance of statutory obligation the same shall be on contractor's account.

M. Clause No. C.24.0 (Delay and Extension of Time) of Conditions of Contract for Civil Works has been modified as below

If, in the opinion of the Engineer, the work is delayed

(i) by reason of abnormally bad weather, or

(ii) by reason of serious loss or damage by fire, or

(iii) by reason of civil commotion, local combination of workmen, strike or lockout, affecting any of the trades employed on the work, or

(iv) by delay on the part of the agency or tradesman engaged by the BHEL in executing work not forming part of the contract, or

(v) By reason of any other cause which in the absolute discretion of the Engineer is beyond the contractor's control, then in any such case, the Engineer (or higher authority) may make fair and reasonable extension in the completion dates of the individual items of work of the contract as whole. Such extension which will be communicated to the contractor by the Engineer in writing shall be final and binding on the contractor. No other claim in this respect for compensation, idle labour or otherwise howsoever is admissible. Upon the happening of any such event causing delay the contractor shall immediately give notice thereof in writing to the Engineer but shall nevertheless use constantly his best endeavour to prevent or make good the delay and shall do all that may reasonably be required to the satisfaction of the Engineer to proceed with the work.

(vi) In case of delay in completion of work BHEL reserve the right to grant time extension under the following options depending upon the performance of the vendor:

a. Time extension without levy of LD in case it is found that delay is not attributable to the vendor

b. Time extension with deduction of applicable LD in line with Liquidity Damage clause if the delay is solely attributable to the vendor.

c. In case facts of delay is not settled, BHEL reserve the right to grant provisional time extension for delay in completion of total work or part thereof and running/ interim payments to the vendor will be released without deduction of LD subject to submission of additional Bank guarantee equivalent to maximum LD amount valid till completion of work under their scope and grant of final time extension.

During provisional time extension period ORC/ PVC shall not be payable to the contractor. The Final Delay analysis shall be prepared on completion of the work. In case of delay is not attributable to contractor as per final delay analysis the ORC/ PVC shall be released along with the final bill without any interest charges attributable to BHEL.

In case of delay attributable to contractor, LD shall be deducted for that period in line with clause "Compensation/ LD/ Penalty for delay in execution" of conditions of contract and balance ORC/ PVC (if any) shall be released along with the final bill without any interest charges attributable to BHEL.

PVC/ ORC shall be governed by respective clauses in the NIT.

N. Model Conciliation Clause for Conducting Conciliation Proceedings Under The BHEL Conciliation Scheme, 2018

The Parties the if at any time (whether before, during or after the arbitral or judicial proceedings), any Disputes (which terms shall means and include any dispute, difference, question or disagreement arising in connection with construction, meaning, operation, effect, interpretation or breach of the agreement, contract or the Memorandum of Understanding (delete whichever is inapplicable), which the parties unable to settle mutually), arise inter-se the Parties, the same may, be refereed by either party to conciliation to be conducted through Independent Experts Committee to be appointed by competent authority of BHEL from the BHEL Panel of Conciliators.

Notes:

1. No serving or a retired employee of BHEL/Administrative Ministry of BHEL shall be included in the BHEL Panel of Conciliators.

2. Any other person(s) can be appointed as Conciliator(s) who is/are mutually agreeable to both the parties from outside the BHEL Panel of Conciliators.

The proceedings of Conciliation shall broadly be governed by Part-III of the Arbitration and Conciliation Act 1996 or any statutory modification thereof and as provided in Annexure-A to this GCC.
The Annexure-A together with it's appendices will be treated as if the same is part and parcel hereof and shall be as effectual as if set out herein in these GCC."

O. RIGHTS OF BHEL: - The Clause No. B.7.0 "RIGHTS of BHEL" of Conditions of contract for Civil works stands deleted. Now the modified clause shall be read as below: -

BHEL **reserves** the following rights in respect of this contract during the original contract period or its extensions if any, as per the provisions of the contract, without entitling the contractor for any compensation

N.7.1 To withdraw any portion of work (after due opportunity given to contractor to meet schedule**)** &/or to restrict/alter quantum of work as indicated in the contract during the progress of construction and get it done through other agency to suit BHEL's commitment to its customer or in case BHEL decides to advance the date of completion period due to other emergent reasons/BHEL's obligations to its customer.

N.7.2 To restrict or increase the quantity and nature of work to suit site requirements, since the tender specification is based on preliminary documents and quantities furnished therein are indicative and approximate. Quantity/ contract variation clause may also be read in conjunction with this clause.

N.7.3 To terminate the contract or to restrict the quantum of work and pay for the portion of work executed in case BHEL's contracts with its customer are terminated/ altered/ deferred/ disputed/on hold for any reason as per mutual agreement.

N.7.4 To effect recovery from any amounts due to the contractor under this or any other contract or in any other form, the moneys BHEL is statutorily forced to pay to anybody, due to contractor's failure to fulfill any of his obligations. BHEL shall levy overheads of 5% on all such payments.

N.7.5 While every endeavour will be made by BHEL to this end, they cannot guarantee uninterrupted work due to conditions beyond their control. The Contractor will not be normally entitled for any compensation/extra payment on this account unless otherwise specified elsewhere in the contract. No idle labour charges will be payable by BHEL in any case.

N.7.6 To deploy BHEL's skilled and unskilled workmen in case of emergency/poor progress/deficiency in skill on the part of the employees of the contractor and to recover the expenditure on account of the same from the moneys due to the contractor.

N.7.7 In event of termination of contract/ withdrawal/ the contractor shall have no claim to compensate for any loss sustained by him by reason of having purchase of any material or entered into agreement or made any advance on account of execution of work/ contract on account of any profit or advantage which he might have derived from the execution of the works in full but which he did not derive in consequence of the termination/ withdrawal of works.

N.7.8 In the event of any dispute of technical nature, the decision of BHEL shall be final and binding on the Contractor.

N.7.9 **Risk & Cost Clause**

In case of fault of the contractor, BHEL reserves the following rights without entitling the contractor for any compensation:

N.7.9.1 To terminate the contract or withdraw portion of work and get it done through other agency, at the risk and cost of the contractor after due notice **of a period of 14 days' by BHEL i**n any of the following cases:

i) Contractor's poor progress of the work vis-à-vis execution timeline as stipulated in the Contract, backlog attributable to contractor including unexecuted portion of work does not appear to be executable within balance available period considering its performance of execution.

ii) Withdrawal from or abandonment of the work by contractor before completion of the work as per contract.

iii) Non-completion of work by the Contractor within scheduled completion period as per Contract or as extended from time to time, for the reasons attributable to the contractor.

iv) Termination of Contract on account of any other reason (s) attributable to Contractor.

v) Assignment, transfer, subletting of Contract without BHEL's written permission.

vi) Non-compliance to any contractual condition or any other default attributable to Contractor.

N.7.9.2 **Risk & Cost Amount against Balance Work**:

Risk & Cost amount against balance work shall be calculated as follows:

Risk & Cost Amount= [(A-B) + (A x H/100)]

Where,

A= Value of Balance scope of Work (*) as per rates of new contract

B= Value of Balance scope of Work (*) as per rates of old contract being paid to the contractor at the time of termination of contract i.e. inclusive of PVC & ORC, if any.

H = Overhead Factor to be taken as 5

In case (A-B) is less than 0 (zero), value of (A-B) shall be taken as 0 (zero).

* Balance scope of work (in case of termination of contract):

Difference of Contract Quantities and Executed Quantities as on the date of issue of Letter for 'Termination of Contract', shall be taken as balance scope of Work for calculating risk & cost amount.

Contract quantities are the quantities as per original contract. If, Contract has been amended, quantities as per amended Contract shall be considered as Contract Quantities.

Items for which total quantities to be executed have exceeded the Contract Quantities based on drawings issued to contractor from time to time till issue of Termination letter, then for these items total Quantities as per issued drawings would be deemed to be contract quantities.

Substitute/ extra items whose rates have already been approved would form part of contract quantities for this purpose. Substitute/ extra items which have been executed but rates have not been approved, would also form part of contract quantities for this purpose and rates of such items shall be determined in line with contractual provisions.

However, increase in quantities on account of additional scope in new tender shall not be considered for this purpose.

NOTE: In case portion of work is being withdrawn at risk & cost of contractor instead of termination of contract, contract quantities pertaining to portion of work withdrawn shall be considered as 'Balance scope of work' for calculating Risk & Cost amount.

N.7.9.3 **LD against delay in executed work in case of Termination of Contract:**

LD against delay in executed work shall be calculated in line with LD clause of the contract, for the delay attributable to contractor. For limiting the maximum value of LD, contract value shall be taken as Executed Value of work till termination of contract.

Method for calculation of "LD against delay in executed work in case of termination of contract" is given below.

i) Let the time period from scheduled date of start of work till termination of contract excluding the period of Hold (if any) not attributable to contractor = T1

ii) Let the value of executed work till the time of termination of contract= X

iii) Let the Total Executable Value of work for which inputs/fronts were made available to contractor and were planned for execution till termination of contract = Y

iv) Delay in executed work attributable to contractor i.e. T2=[1-(X/Y)] x T1

v) LD shall be calculated in line with LD clause of the Contract for the delay attributable to contractor taking "X" as Contract Value and "T2" as period of delay attributable to contractor.

N.7.9.4 **Recoveries arising out of Risk & Cost and LD or any other recoveries due from Contractor**

Following sequence shall be applicable for recoveries from contractor after informing the contractor of the total proposed recovery:

a) Dues available in the form of Bills payable to contractor, SD, BGs against the same contract.
b) Demand notice for deposit of balance recovery amount to be sent to contractor, if funds are insufficient to effect complete recovery against dues indicated in (a) above.
c) If contractor fails to deposit the balance risk & cost amount within the period as prescribed in demand notice, following action shall be taken for balance recovery:

i) Dues payable to contractor against other contracts in the same Region/unit shall be considered for recovery.

ii) If recovery cannot be made out of dues payable to the contractor as above, balance amount to be recovered, shall be informed to other Regions/Units for making recovery from the Unpaid Bills/Running Bills/SD/BGs/Final Bills of contractor.

iii) In-case recoveries are not possible with any of the above available options, Legal action shall be initiated for recovery against contractor.

P. PERFORMANCE MONITORING:

The Contractors performance shall be continuously monitored during execution of work at site.

In case of contractor's performance is found not satisfactory during the execution of work at site, BHEL may take alternate remedial measures and may not consider the contractor for further tenders, if the contractor performance is not improved in spite of opportunities given by BHEL.

Q. <u>The Clause No. B.15.0 "Arbitration" of Conditions of contract for Civil works stands deleted. Now the modified clause shall be read as below:</u>

(i) Except as provide elsewhere in this Contract, in case amicable settlement is not reached between the Parties, in respect of any dispute or difference; arising out of the formation, breach, termination, validity or execution of the contract; or, the respective rights and liabilities of the Parties; or, in relation to interpretation of any provision of the contract; or, in relation to interpretation of any provision of the Contract; or, in any manner touching upon the contract, then, either Party may, by a notice in writing to the other Party refer such dispute or difference to the sole arbitration of an arbitrator appointed by Head of the BHEL Unit/Region/Division issuing the Contract.

The Arbitrator shall pass a reasoned award and the award of the Arbitrator shall be final and binding upon the Parties.

Subject as aforesaid, the provisions of Arbitration and Conciliation Act 1996 (India) or statutory modifications or re-enactments thereof and the rules made thereunder and for the time being in force shall apply to the arbitration proceedings under this clause. The seat of arbitration shall be New Delhi.

The cost of arbitration shall be borne as per the award of the Arbitrator.

Subject to the arbitration in terms of clause L above, the court at New Delhi shall have exclusive jurisdiction over nay matter arising out of or in connection with this Contract.

Notwithstanding the existence or any dispute or differences and/or reference for the arbitration, the Contractor shall proceed with and continue without hindrance the performance of its obligations under this contract with due diligence and expedition in a professional manner except where the contract has been terminated by either Party in terms of this contract.

(ii) In the event of dispute or difference relating to the interpretation and application of the provisions of commercial contract(s) between Central Public Sector Enterprises (CPSEs)/ Port Trusts inter se and also between CPSEs and Government Departments/Organizations (excluding disputes concerning Railways, Income Tax, Customs & Excise Departments), such dispute or difference shall be taken up by either party for resolution through AMRCD as mentioned in DPE OM No.4(1)/2013-DPE9GM)/FTS-1835 dated 22.05.2018.

R. FACILITIES PROVIDED TO MSEs

Vide office memorandum F.No.21(8)/2011-MA dated 09.11.2016, Office of AS&DC, Ministry of MSME has issued clarification regarding definition of Goods and Services under the Public Procurement Policy of MSEs order-2012, In accordance with the Public Procurement Policy for MSEs order-2012 and OM regarding definition of Goods and Services issued by Ministry of MSME, it is clarified that benefits as envisaged in Public Procurement Policy for MSEs Order 2012 are to be provided in respect of the procurements related to the Goods and Services produced and provided by Micro and Small Enterprises (MSEs) only and **no benefits is to be given in Case of Works Contracts**.

S. BOCW (TAXES, DUTIES & LEVIES):

S.1	**BUILDING & OTHER CONSTRUCTION WORKERS (REGULATION OF EMPLOYMENT AND CONDITIONS OF SERVICE) ACT, 1996 (BOCW Act) AND RULES OF 1998 READ WITH BUILDING & CONSTRUCTION WORKERS CESS Act, 1996 & CESS RULES, 1998.**
	In case any portion of work involves execution through building or construction workers, then compliance to the above titled Acts shall be ensured by the contractor and contractor shall obtain license and deposit the cess under the Act. In the circumstances it may be ensured as under:-
S.1.1	It shall be the sole responsibility of the contractor in the capacity of employer to forthwith (within a period of 15 days from the award of work) apply for a licence to the Competent Authority under the BOCW Act and obtain proper certificate thereof by specifying the scope of its work. It shall also be responsibility of the contractor to furnish a copy of such certificate of licence / permission to BHEL within a period of one month from the date of award of contract.
S.1.2	It shall be the sole responsibility of the contractor as employer to ensure compliance of all the statutory obligations under these act and rules including that of payment / deposit of 1% cess on gross payment made for value of work involving building or construction workers engaged by the contractor within a period of one month from the receipt of payment.
S.1.3	It shall be the responsibility of the sub-contractor to furnish the receipts / challans towards deposit of the cess together with the number, name and other details of beneficiaries (building workers) engaged by the sub-contractor during the preceding month.
S.1.4	It shall be the absolute responsibility of the sub-contractor to make payment of all statutory payments & compensations to its workers including that is provided under the Workmen's Compensation Act, 1923.
S.1.5	The contractor shall, however ensure before deposit of any BOCW cess, that customer is not depositing the same in order to avoid excess deposit of cess.
S.1.6	The contractor shall bear cost of BOCW cess either by way of deposit or through recovery by BHEL in case the same is deposited by the customer.
S.1.6	In case of failure in above mentioned compliances, BOCW Cess @ 1% as well as applicable penalty as specified in BOCW Act/Rules shall be deducted from the contractor.

T. Royalty:

The contractor shall pay the Royalty on sand, aggregate, earth material used for the project and the contractor has to submit the Royalty certificate to BHEL along with the RA bills.

U. All other terms and conditions of tender shall remain unchanged.

PROFORMA OF BANK GUARANTEE (in lieu of SECURITY DEPOSIT)

In consideration of Bharat Heavy Electricals Limited (hereinafter referred to as the 'Employer' which expression shall unless repugnant to the context or meaning thereof, include its successors and permitted assigns) incorporated under the Companies Act, 1956 and having its registered office at BHEL House, Siri Fort, New Delhi-110049 through its Unit at BHEL, Transmission Business Group, Noida (name of the Unit) having agreed to exempt _____(Name of the Vendor / Contractor / Supplier) with its registered office at_____[1] (hereinafter called the said "Contractor" which term includes supplier), from demand under the terms and conditions of the Contract reference No._____ dated _____ [2] valued at Rs…….[3](Rupees ……) (hereinafter called the said Contract), of Security Deposit for the due fulfilment by the said Contractor of the terms and conditions contained in the said Contract, on production of a Bank Guarantee for Rs…….[4] (Rupees…….....only),

We _____(indicate the name and address of the Bank) having its Head Office at _____(address of the head Office) (hereinafter referred to as the Bank), at the request of _____ [Contractor(s)], being the Guarantor under this Guarantee, do hereby irrevocably and unconditionally undertake to forthwith and immediately pay to the Employer, an amount not exceeding Rs._____without any demur, immediately on demand from the Employer and without any reservation, protest, and recourse and without the Employer needing to prove or demonstrate reasons for its such demand

Any such demand made on the bank, shall be conclusive as regards the amount due and payable by the Bank under this guarantee. However, our liability under this guarantee shall be restricted to an amount not exceeding Rs._____.

We undertake to pay to the Employer any money so demanded notwithstanding any dispute or disputes raised by the Contractor(s) in any suit or proceeding pending before any Court or Tribunal or Arbitrator or any other authority, our liability under this present being absolute and unequivocal.

The payment so made by us under this guarantee shall be a valid discharge of our liability for payment hereunder and the Contractor(s) shall have no claim against us for making such payment.

We, further agree that the guarantee herein contained shall remain in full force and effect during the period that would be taken for the performance of the said Contract and that it shall continue to be enforceable till all the dues of the Employer under or by virtue of the said Contract have been fully paid and its claims satisfied & the Employer certifies that the terms and conditions of the said Contract have been fully and properly carried out by the said contractor(s) or acceptance of the final bill or discharge of this guarantee by the Employer, whichever is earlier. This guarantee shall initially remain in force up to and including_____[5] and shall be extended from time to time for such period as may be desired by the Employer. Unless a demand or claim under this guarantee is made on us in writing on or before the _____[6], (3 months more than the present date of validity of Bank Guarantee) we shall be discharged from all the liability under this guarantee thereafter.

We, _____ (indicate the name of the Bank) further agree with the Employer that the Employer shall have the fullest liberty without our consent and without affecting in any manner our obligations hereunder to vary any of the terms and conditions of the said Contract or to extend time of performance by the said contractor(s) from time to time or to postpone for any time or from time to time any of the powers exercisable by the Employer against the said contractor(s) and to forbear or enforce any of the terms and conditions relating to the said

Contract and we shall not be relieved from our liability by any reason of any such variation or extension being granted to the said contractor(s) or for any forbearance, act or omission on the part of the Employer or any indulgence by the Employer to the said contractor(s) or by any such matter or thing whatsoever which under the law relating to sureties would but for this provision have effect of so relieving us.

The Bank also agrees that the Employer at its option shall be entitled to enforce this Guarantee against the Bank as a principal debtor, in the first instance without proceeding against the Contractor and notwithstanding any security or other guarantee that the Employer may have in relation to the Contractor's liabilities.

This Guarantee shall not be determined or affected by liquidation or winding up, dissolution or change of constitution or insolvency of the Contractor but shall in all respects and for all purposes be binding and operative until payment of all money payable to the Employer in terms thereof. This guarantee will not be discharged due to the change in the constitution of the Bank or the Contractor(s).

We,…… BANK lastly undertake not to revoke this guarantee during its currency except with the previous consent of the Employer in writing.

Notwithstanding anything to the contrary contained hereinabove:

a) The liability of the Bank under this Guarantee shall not exceed…… [4]

b) This Guarantee shall be valid up to ……[5]

c) Unless the Bank is served a written claim or demand on or before _____[6] all rights under this guarantee shall be forfeited and the Bank shall be relieved and discharged from all liabilities under this guarantee irrespective of whether or not the original bank guarantee is returned to the Bank.

We, _____ Bank, have power to issue this Guarantee under law and the undersigned as a duly authorized person has full powers to sign this Guarantee on behalf of the Bank.

Date _____ Day of _____

for___(indicate the name of the Bank)__

(Signature of Authorised signatory)

[1] ADDRESS OF THE VENDOR /CONTRACTOR / SUPPLIER .

[2] DETAILS ABOUTTHE NOTICE OF AWARD/CONTRACTREFERENCE

[3] CONTRACT VALUE

[4] BG AMOUNTIN FIGURES AND WORDS

[5] VALIDITY DATE (At least 3 months more than completion period)

[6] DATE OF EXPIRY OF CLAIM PERIOD (At least 3 months more than the present date of validity of BG)

Notes:

1 The expiry of claim period shall be at least 3 months more than the validity date. It may be ensured that the same is in line with the agreement/ contract entered with the Vendor.

2 The BG should be on Non-Judicial Stamp paper/e-stamp paper of appropriate value as per Stamp Act prevailing in the State(s) where the BG is submitted or is to be acted upon or the rate

prevailing in the State where the BG was executed, whichever is higher. The Stamp Paper/e-stamp paper shall be purchased in the name of Vendor/Contractor/Supplier /Bank issuing the guarantee.

3 In Case of Bank Guarantees submitted by Foreign Vendors:

a. From Nationalized/Public Sector / Private Sector/ Foreign Banks (BG issued by Branches in India) can be accepted subject to the condition that the Bank Guarantee should be enforceable in the town/city or at nearest branch where the Unit is located i.e. Demand can be presented at the Branch located in the town/city or at nearest branch where the Unit is located.

b. From Foreign Banks (wherein Foreign Vendors intend to provide BG from local branch of the Vendor country's Bank)

b.1 In such cases, in the Tender Enquiry/ Contract itself, it may be clearly specified that Bank Guarantee issued by **any of the Consortium Banks only** will be accepted by BHEL. As such, Foreign Vendor needs to make necessary arrangements for issuance of Counter- Guarantee by Foreign Bank in favour of the Indian Bank's (BHEL's Consortium Bank) branch in India. It is advisable that all charges for issuance of Bank Guarantee/ counter- Guarantee should be borne by the Foreign Vendor. The tender stipulation should clearly specify these requirements.

b.2 In case, Foreign Vendors intend to provide BG from Overseas Branch of our Consortium Bank (e.g. if a BG is to be issued by SBI Frankfurt), the same is acceptable. However, the procedure at sl.no. b.1 will required to be followed.

PROFORMA OF BANK GUARANTEE (in lieu of EARNEST MONEY if permissible in NIT)

(On non-Judicial paper of appropriate value)

Bank Guarantee No…….

Date…….

To,

M/s Bharat Heavy Electricals Limited
Transmission Business Group (TBG)
5th Floor, Advant Navis IT Business Park
Plot No. 7, Sector-142, Expressway Noida,
UP-201305

Dear Sirs,

In accordance with the terms and conditions of Invitation for Bids/Notice Inviting Tender No……[1](Tender Conditions), M/s ……. having its registered office at ……[2] (hereinafter referred to as the 'Tenderer'), is submitting its bid for the work of …… ……[3] invited by M/s Bharat Heavy Electricals Limited through its Unit at BHEL, Transmission Business Group, Noida.

The Tender Conditions provide that the Tenderer shall pay a sum of Rs ……. as Earnest Money Deposit in the form therein mentioned. The form of payment of Earnest Money Deposit includes Bank Guarantee executed by a Scheduled Bank.

In lieu of the stipulations contained in the aforesaid Tender Conditions that an irrevocable and unconditional Bank Guarantee against Earnest Money Deposit for an amount of Rs.....[4] is required to be submitted by the Tenderer as a condition precedent for participation in the said Tender and the Tenderer having approached us for giving the said Guarantee,

We, the…….....[Name & address of the Bank]

having our Registered Office at…….…….....(hereinafter referred to as the Bank) being the Guarantor under this Guarantee, hereby irrevocably and unconditionally undertake to forthwith and immediately pay to the Employer without any demur, merely on your first demand any sum or sums of Rs. .....[4] (in words Rupees.....) without any reservation, protest, and recourse and without the beneficiary needing to prove or demonstrate reasons for its such demand.

Any such demand made on the Bank shall be conclusive as regards the amount due and payable by the Bank under this guarantee. However, our liability under this guarantee shall be restricted to an amount not exceeding Rs._____.

We undertake to pay to the Employer any money so demanded notwithstanding any dispute or disputes raised by the Vendor/Contractor/Supplier in any suit or proceeding pending before any Court or Tribunal, Arbitrator or any other authority, our liability under this present being absolute and unequivocal.

The payment so made by us under this Guarantee shall be a valid discharge of our liability for payment hereunder and the Tenderer shall have no claim against us for making such payment.

We ……. Bank further agree that the Employer shall have the fullest liberty without our consent and without affecting in any manner our obligations hereunder to vary any of the terms and conditions of the said Tender or to extend the time of submission of from time to time or to postpone for any time or from time to time any of the powers exercisable by the Employer against the said Tenderer and we shall not be relieved from our liability by reason of any such variation, or extension being granted to the said Tenderer or for any forbearance, act or omission on the part of the Employer or any indulgence by the Employer to the said Tenderer or by any such matter or thing whatsoever which under the law relating to sureties would but for this provision have effect of so relieving us.

The Bank also agrees that the Employer at its option shall be entitled to enforce this Guarantee against the Bank as a principal debtor, in the first instance without proceeding against the Tenderer and notwithstanding any security or other guarantee that the Employer may have in relation to the Tenderer's liabilities.

This Guarantee shall be irrevocable and shall remain in force upto and including……..[5] and shall be extended from time to time for such period as may be desired by the Employer.

This Guarantee shall not be determined or affected by liquidation or winding up, dissolution or change of constitution or insolvency of the Tenderer but shall in all respects and for all purposes be binding and operative until payment of all money payable to the Employer in terms hereof. However, unless a demand or claim under this Guarantee is made on us in writing on or before the ……. [6] we shall be discharged from all liabilities under this Guarantee.

We, …… Bank lastly undertake not to revoke this guarantee during its currency except with the previous consent of the Employer in writing.

Notwithstanding anything to the contrary contained hereinabove:

a) The liability of the Bank under this Guarantee shall not exceed……..[4]

b) This Guarantee shall be valid up to ……[5]

c) Unless the Bank is served a written claim or demand on or before _____[6] all rights under this guarantee shall be forfeited and the Bank shall be relieved and discharged from all liabilities under this guarantee irrespective of whether or not the original bank guarantee is returned to the Bank.

We, _____ Bank, have power to issue this Guarantee under law and the undersigned as a duly authorized person has full powers to sign this Guarantee on behalf of the Bank.

For and on behalf of

(Name of the Bank)

Date…….....……..

Place of Issue…….

1 Details of the Invitation to Bid/Notice Inviting Tender
2 Name and Address of the Tenderer
3 Details of the Work
4 BG Amount in words and Figures
5 Validity Date (At least six months from date of tender opening)
6 Date of Expiry of Claim Period (At least 3 months more than the present date of validity of BG)

Note:

1 The Bank Guarantee should be valid for at least six months from date of tender opening. The expiry of claim period shall be at least 3 months more than the validity date. It may be ensured that the same is in line with the agreement/ contract entered with the Vendor.

2 The BG should be on Non-Judicial Stamp paper/e-stamp paper of appropriate value as per Stamp Act prevailing in the State(s) where the BG is submitted or is to be acted upon or the rate prevailing in the State where the BG was executed, whichever is higher. The Stamp Paper/e-stamp paper shall be purchased in the name of Vendor/Contractor/Supplier /Bank issuing the guarantee.

3 **In Case of Bank Guarantees submitted by Foreign Vendors-.**

a. **From Nationalized / Public Sector / Private Sector/ Foreign Banks (BG issued by Branches in India)** can be accepted subject to the condition that the Bank Guarantee should be enforceable in the town/city or at nearest branch where the Unit is located i.e. Demand can be presented at the Branch located in the town/city or at nearest branch where the Unit is located.

b. From Foreign Banks (wherein Foreign Vendors intend to provide BG from local branch of the Vendor country's Bank)

b.1 In such cases, in the Tender Enquiry/ Contract itself, it may be clearly specified that Bank Guarantee issued by **any of the Consortium Banks only** will be accepted by BHEL. As such, Foreign Vendor needs to make necessary arrangements for issuance of Counter- Guarantee by Foreign Bank in favour of the Indian Bank's (BHEL's Consortium Bank) branch in India. It is advisable that all charges for issuance of Bank Guarantee/ counter- Guarantee should be borne by the Foreign Vendor. The tender stipulation should clearly specify these requirements.

b.2 In case, Foreign Vendors intend to provide BG from Overseas Branch of our Consortium Bank (e.g. if a BG is to be issued by SBI Frankfurt), the same is acceptable. However, the procedure **at sl.no. b.1** will required to be followed.

b.3 The BG issued may preferably be subject to Uniform Rules for Demand Guarantees (URDG) 758 (as amended from time to time). The BG Format provided to them should clearly specify the same.

Annexure-A

ANNEXURE TO MODEL CONCILIATION CLAUSE FOR CONDUCT OF CONCILIATION UNDER THE BHEL CONCILIATION SCHEME, 2018

BRIEF PROCEDURE FOR CONDUCT OF CONCILIATION PROCEEDINGS

1. The proceedings of Conciliation shall broadly be governed by Part-III of the Arbitration and Conciliation Act 1996 or any statutory modification thereof and as provided herein:

2. The party desirous of resorting to Conciliation shall send an invitation/notice in writing to the other party to conciliate specifying all points of Disputes with details of the amount claimed. The party concerned shall not raise any new issue thereafter. Parties shall also not claim any interest on claims/counter-claims from the date of notice invoking Conciliation till the conclusion of the Conciliation proceedings.

3. The party receiving the invitation/notice for Conciliation shall within 30 days of receipt of the notice of Conciliation intimate its consent for Conciliation along with its counter-claims, if any.

4. The Conciliation in a matter involving claim or counter-claim (whichever is higher) up to Rs 5 crores shall be carried out by sole Conciliator nominated by BHEL while in a matter involving claim or counter-claim (whichever is higher) of more than Rs 5 crores Conciliation shall be carried out by 3 Conciliators nominated by BHEL.

5. The Parties shall be represented by only their duly authorized in-house executives/officers and neither Party shall be represented by a Lawyer.

6. The first meeting of the IEC shall be convened by the IEC by sending appropriate communication/notice to both the parties as soon as possible but not later than 30 days from the date of his/their appointment. The hearings in the Conciliation proceeding shall ordinarily be concluded within two (2) months and, in exceptional cases where parties have expressed willingness to settle the matter or there exists possibility of settlement in the matter, the proceedings may be extended by the IEC by a maximum of further 2 months with the consent of the Parties subject to cogent reasons being recorded in writing.

7. The IEC shall thereafter formulate recommendations for settlement of the Disputes supported by reasons at the earliest but in any case within

15 days from the date of conclusion of the last hearing. The recommendations so formulated along with the reasons shall be furnished by the IEC to both the Parties at the earliest but in any case within 1 month from the date of conclusion of the last hearing.

8. Response/modifications/suggestions of the Parties on the recommendations of the IEC are to be submitted to the IEC within time limit stipulated by the IEC but not more than 15 days from the date of receipt of the recommendations from the IEC.

9. In the event, upon consideration, further review of the recommendations is considered necessary, whether by BHEL or by the other Party, then, the matter can be remitted back to the IEC with request to reconsider the same in light of the issues projected by either/both the Parties and to submit its recommendations thereon within the following 15 days from the date of remitting of the case by either of the Parties.

10. Upon the recommendations by the Parties, with or without modifications, as considered necessary, the IEC shall be called upon to draw up the Draft Settlement Agreement in terms of the recommendations.

11. When a consensus can be arrived at between the parties only in regard to any one or some of the issues referred for Conciliation the draft Settlement Agreement shall be accordingly formulated in regard to the said Issue(s), and the said Settlement Agreement, if signed, by the parties, shall be valid only for the said issues. As regards the balance issues not settled, the parties may seek to resolve them further as per terms and conditions provided in the contract.

12. In case no settlement can be reached between the parties, the IEC shall by a written declaration, pronounce that the Conciliation between the parties has failed and is accordingly terminated.

13. Unless the Conciliation proceedings are terminated in terms of para 22 (b), (c) & (d) herein below, the IEC shall forward his/its recommendations as to possible terms of settlement within one (1) month from the date of last hearing. The date of first hearing of Conciliation shall be the starting date for calculating the period of 2 months.

14. In case of 3 members IEC, 2 members of IEC present will constitute a valid quorum for IEC and meeting can take place to proceed in the matter after seeking consent from the member who is not available. If necessary, videoconferencing may be arranged for facilitating participation of the members. However, the IEC recommendations will be signed by all members. Where there is more than one (1) Conciliator, as a general rule they shall act jointly. In the event of differences between the Members of IEC, the decision/recommendations of the majority of the Members of IEC shall prevail and be construed as the recommendation of the IEC.

15. The Draft Settlement Agreement prepared by the IEC in terms of the consensus arrived at during the Conciliation proceedings between the Parties shall be given by the IEC to both the parties for putting up for approval of their respective Competent Authority.

16. Before submitting the draft settlement agreement to BHEL's Competent Authority viz. the Board Level Committee on Alternative Dispute Resolution (BLCADR) for approval, concurrence of the other party's Competent Authority to the draft settlement agreement shall be obtained by the other party and informed to BHEL within 15 days of receipt of the final draft settlement agreement by it. Upon approval by the Competent Authority, the Settlement Agreement would thereafter be signed by the authorized representatives of both the Parties and authenticated by the members of the IEC.

17. In case the Draft Settlement Agreement is rejected by the Competent Authority of BHEL or the other Party, the Conciliation proceedings would stand terminated.

18. A Settlement Agreement shall contain a statement to the effect that each of the person(s) signing thereto (i) is fully authorized by the respective Party(ies) he/she represents, (ii) has fully understood the contents of the same and (iii) is signing on the same out of complete freewill and consent, without any pressure, undue influence.

19. The Settlement Agreement shall thereafter have the same legal status and effect as an arbitration award on agreed terms on the substance of the dispute rendered by an arbitral tribunal passed under section 30 of the Arbitration and Conciliation Act, 1996.

20. Acceptance of the Draft Settlement Agreement/recommendations of the Conciliator and/or signing of the Settlement Agreement by BHEL shall

however, be subject to withdrawal/closure of any arbitral and/or judicial proceedings initiated by the concerned Party in regard to such settled issues.

21. Unless otherwise provided for in the agreement, contract or the Memorandum of Understanding, as the case may be, in the event of likelihood of prolonged absence of the Conciliator or any member of IEC, for any reason/incapacity, the Competent Authority/Head of Unit/Division/Region/Business Group of BHEL may substitute the Conciliator or such member at any stage of the proceedings. Upon appointment of the substitute Conciliator(s), such reconstituted IEC may, with the consent of the Parties, proceed with further Conciliation into the matter either de-novo or from the stage already reached by the previous IEC before the substitution.

22. The proceedings of Conciliation under this Scheme may be terminated as follows:
    a. On the date of signing of the Settlement agreement by the Parties; or,
    b. By a written declaration of the IEC, after consultation with the parties, to the effect that further efforts at conciliation are no longer justified, on the date of the declaration; or,
    c. By a written declaration of the Parties addressed to the IEC to the effect that the Conciliation proceedings are terminated, on the date of the declaration; or,
    d. By a written declaration of a Party to the other Party and the IEC, if appointed, to the effect that the Conciliation proceedings are terminated, on the date of the declaration.
    e. On rejection of the Draft Settlement Agreement by the Competent Authority of BHEL or the other Party.

23. The Conciliator(s) shall be entitled to following fees and facilities:

Sl No	Particulars	Amount
1	Sitting fees	Each Member shall be paid a Lump Sum fee of Rs 75,000/- for the whole case payable in terms of paragraph No. 27 herein below.
2	Towards drafting of settlement agreement	In cases involving claim and/or counter-claim of up to Rs 5crores. Rs 50,000/- (Sole Conciliator)

Sl No	Particulars	Amount
		In cases involving claim and/or counter-claim of exceeding Rs 5 crores but less than Rs 10 crores. Rs 75,000 (per Conciliator) In cases involving claim and/or counter-claim of more than Rs 10 crores. Rs 1,00,000/- (per Conciliator) Note: The aforesaid fees for the drafting of the Settlement Agreement shall be paid on Signing of the Settlement Agreement after approval of the Competent Authority or Rejection of the proposed Settlement Agreement by the Competent Authority of BHEL.
3	Secretarial expenses	Rs 10,000/- (one time) for the whole case for Conciliation by a Sole Member IEC. Where Conciliation is by multi member Conciliators –Rs 30,000/- (one time)- to be paid to the IEC
4	Travel and transportation and stay at outstation i) Retired Senior Officials of other Public Sector Undertakings (pay scale wise equivalent to or more than E-8 level of BHEL)	As per entitlement of the equivalent officer (pay scale wise) in BHEL.
	Others	As per the extant entitlement of whole time Functional Directors in BHEL.

Sl No	Particulars	Amount
		Ordinarily, the IEC Member(s) would be entitled to travel by air Economy Class.
5	Venue for meeting	Unless otherwise agreed in the agreement, contract or the Memorandum of Understanding, as the case may be, the venue/seat of proceedings shall be the location of the concerned Unit / Division / Region / Business Group of BHEL. Without prejudice to the seat/venue of the Conciliation being at the location of concerned BHEL Unit / Division / Region / Business Group, the IEC after consulting the Parties may decide to hold the proceedings at any other place/venue to facilitate the proceedings. Unless, Parties agree to conduct Conciliation at BHEL premises, the venue is to be arranged by either Party alternately.

24. The parties will bear their own costs including cost of presenting their cases/evidence/witness(es)/expert(s)on their behalf. The parties agree to rely upon documentary evidence in support of their claims and not to bring any oral evidence in IEC proceedings.

25. If any witness(es) or expert(s) is/are, with the consent of the parties, called upon to appear at the instance of the IEC in connection with the matter, then, the costs towards such witness(es)/expert(s) shall be determined by the IEC with the consent of the Parties and the cost so determined shall be borne equally by the Parties.

26. The other expenditures/costs in connection with the Conciliation proceedings as well as the IEC's fees and expenses shall be shared by the Parties equally.

27. Out of the lump sum fees of Rs 75,000/- for Sitting Fees, 50% shall be payable after the first meeting of the IEC and the remaining 50% of the Sitting Fees shall be payable only after termination of the conciliation proceedings in terms of para 22 hereinabove.

28. The travelling, transportation and stay at outstation shall be arranged by concerned Unit as per entitlements as per Serial No. 3 of the Table at para 23 above, and in case such arrangements are not made by the BHEL Unit, the same shall be reimbursed to the IEC on actuals limited to their entitlement as per Serial No. 4 of the Table at Para 23 above against supporting documents. The IEC Member(s) shall submit necessary invoice for claiming the fees/reimbursements.

29. The Parties shall keep confidential all matters relating to the conciliation proceedings. Confidentiality shall extend also to the settlement agreement, except where its disclosure is necessary for purposes of its implementation and enforcement or as required by or under a law or as per directions of a Court/Governmental authority/ regulatory body, as the case may be.

30. The Parties shall not rely upon or introduce as evidence in any further arbitral or judicial proceedings, whether or not such proceedings relate to the Disputes that is the subject of the Conciliation proceedings:
    a. Views expressed or suggestions made by the other party in respect of a possible settlement of the Disputes;
    b. admissions made by the other party in the course of the Conciliator proceedings;
    c. proposals made by the Conciliator;
    d. The fact that the other Party had indicated his willingness to accept a proposal for settlement made by the Conciliator.

31. The Parties shall not present the Conciliator(s) as witness in any Alternative Dispute Resolution or Judicial proceedings in respect of a Disputes that is/was the subject of that particular Conciliation proceeding.

32. None of the Conciliators shall act as an arbitrator or as a representative or counsel of a Party in any arbitral or judicial proceeding in respect of a Disputes that is/was the subject of that particular Conciliation proceeding.

33. The Parties shall not initiate, during the Conciliation proceedings, any arbitral or judicial proceedings in respect of a Disputes that is the subject matter of the Conciliation proceedings except that a Party may initiate arbitral or judicial proceedings where, in his opinion, such proceedings are necessary for preserving his rights including for preventing expiry of period of limitation. Unless terminated as per the provisions of this Scheme, the Conciliation proceedings shall continue

notwithstanding the commencement of the arbitral or judicial proceedings and the arbitral or judicial proceedings shall be primarily for the purpose of preserving rights including preventing expiry of period of limitation.

34. The official language of Conciliation proceedings under this Scheme shall be English unless the Parties agree to some other language.

Format 2 to BHEL Conciliation Scheme, 2018

FORMAT FOR SEEKING CONSENT FOR REFERRING THE DISPUTES TO CONCILIATION THROUGH IEC

To,

M/s. (Stakeholder's name)

Sub: Resolution of the Disputes through conciliation by Independent Expert Committee (IEC).

Ref: Contract No/MoU/Agreement/LOI/LOA& date _____.

Sir,

With reference to above referred Contract/MoU/Agreement/LOI/LOA, you have raised certain Disputes/claims. Vide your letter dated____ you have requested BHEL to refer the Disputes/claims to IEC for Conciliation.

We are enclosing herewith Format (3) for giving consent and the terms and conditions of BHEL Conciliation Scheme, 2018 governing conciliation through IEC. You are requested to give your unconditional consent to the said terms and conditions of the Scheme by returning the same duly sealed and signed on each page. On receipt of your consent, matter will be put to the Competent Authority for consideration and decision.

Please note that BHEL has also certain claims against you (if applicable). BHEL reserves its right to agree or not to agree conciliation of the said disputes through BHEL and this letter is being issued without prejudice to BHEL's rights and contentions available under the contract and law.

Yours faithfully,

Representative of BHEL

Format 3 to BHEL Conciliation Scheme, 2018

FORMAT FOR GIVING CONSENT BY CONTRACTOR/VENDOR/CUSTOMER/COLLABORATOR/CONSORTIUM PARTNERSFOR REFERRING THE DISPUTES TO CONCILIATION THROUGH IEC

To,

BHEL

……

Sub: Resolution of Disputes through Conciliation by Independent Expert Committee (IEC).

Ref: Contract/MoU/Agreement/LOI/LOA No & date____

With reference to above referred contract, our following bills/invoices/claims submitted to BHEL are still unpaid giving rise to Disputes:

SL. no.	Claim Description	Bill submitted to BHEL (no. and date)	Amount of the bill/claim	Amount received from BHEL	Outstanding Amount

Accordingly we request you to kindly refer the Disputes in respect of above claims to IEC for Conciliation.

We hereby agree and give our unconditional consent to the terms and conditions of BHEL Conciliation Scheme, 2018 governing conciliation through IEC. We have signed the same on each page and enclosed it for your consideration.

Yours faithfully,

(Signature with stamp)

Authorized Representative of Contractor
Name, with designation
Date

Format 5 to BHEL Conciliation Scheme, 2018

STATEMENT OF CLAIMS/COUNTER CLAIMS TO BE SUBMITTED TO THE IEC BY BOTH THE PARTIES

1. Chronology of the Disputes

2. Brief of the Contract/MoU/Agreement/LOI/LOA

3. Brief history of the Disputes:

4. Issues:

5. Details of Clam(s)/Counter Claim(s):

SI. No.	**Description of claim(s)/Counter Claim**	**Amount (in INR)Or currency applicable in the contract**	**Relevant contract clause**

6. Basis/Ground of claim(s)/counter claim(s) (along with relevant clause of contract)

Note– *The Statement of Claims/Counter Claims may ideally be restricted to maximum limit of 20 pages. Relevant documents may be compiled and submitted along with the statement of Claims/Counter Claims. The statement of Claims/Counter Claims is to be submitted to all IEC members and to the other party by post as well as by email.*

BILL OF QUANTITY & PRICE SCHEDULE (Annexure-I)

Name of Project: 400/220 kV substation at PGCIL Neemuch site in Madhya Pradesh.

Name of Work : Site levelling work & Construction of Tower & Equipments foundations, Cable trench, Road, Drain, Fencing, Fire Fighting Pump House & Water tank (PKG-I) of 400/220 kV substation at PGCIL Neemuch site in Madhya Pradesh

Name of the Customer : M/s POWERGEID CORPORATION OF INDIA LTD.

Tender Specification No.: TBSM/NEEMUCH/CIVIL/PKG-I/TENDER/22-23 DATE: 27.10.2022

S.No.	Description of Item	Quantity	Unit	Unit Rate (Rs.)	Total Amount (Rs.)
1	Earthwork in excavation & filling in all types of soil and soft / disintegrated rock in open areas / nallas / channels, to the requiredslopes, shapes, levels, elevations and profile, including trimming of bottom and slopes of excavation, bailing out rain(dewatering), pumping, removal of slush, preparing embankments / marginal banks, loosening, dressing, spreading material in layers notexceeding 200mm, as per direction of Engineer-in-Charge, water flooding, compacting to achieve 95% consolidation at optimum moisturecontent, finishing etc. all complete, for all leads and lifts within leveling boundary, including disposal of surplus earth andstacking of unsuitable material within a lead of 2.0 Km beyond substation boundary, with all labour, material, tools, tackles andequipment, safeguards and incidentals, Royalty,taxes etc. as necessary, as per drawings, specification and directions of theEngineer-in-Charge. Clearing of jungle is included in this item. (Only excavation / cutting will be measured for payment purpose.)	16500	cum	87.5	1443750.00
2	Supply of earth (excluding rock & boulders) at site including royalty, carriage and filling in specified areas in layers notexceeding 200mm in depth, compacting under optimum moisture condition to achieve 95% of Proctor density, finishing etc. allcomplete, for all leads & lifts, with all labour, material, tools, tackles, equipments, safeguards & incidentals as necessary as perdrawings, specification and direction of the Engineer- in- Charge.	16500	cum	374.2	6174300.00
3(a)	Felling trees of the girth (measured at a height of 1 m above ground level), including cutting of trunks and branches, removing the roots and stacking of serviceable material and disposal of unserviceable material. **Beyond 30 cm girth upto and including 60 cm girth**	50	Each	219.2	10960.00
3(b)	Felling trees of the girth (measured at a height of 1 m above ground level), including cutting of trunks and branches, removing the roots and stacking of serviceable material and disposal of unserviceable material. **Beyond 60 cm girth upto and including 120 cm girth**	50	Each	972.7	48635.00
4(a)	Earthwork in excavation over areas (exceeding 30cm in depth 1.5m in width as well as 10sqm on plan) including dewatering as necessary of rain water/subsoil seepage water and disposal of excavated earth upto 100m and lift upto 3.6m, disposed earth to be levelled and neatly dressed. **All kinds of soil.**	2570	cum	125.95	323691.50
4(b)	Earthwork in excavation over areas (exceeding 30cm in depth 1.5m in width as well as 10sqm on plan) including dewatering as necessary of rain water/subsoil seepage water and disposal of excavated earth upto 100m and lift upto 3.6m, disposed earth to be levelled and neatly dressed.**Ordinary rock.**	3230	cum	221.05	713991.50
4(c)	Earthwork in excavation over areas (exceeding 30cm in depth 1.5m in width as well as 10sqm on plan) including dewatering as necessary of rain water/subsoil seepage water and disposal of excavated earth upto 100m and lift upto 3.6m, disposed earth to be levelled and neatly dressed. **Hard rock(requiring blasting)**	3230	cum	389.8	1259054.00
4(d)	Earthwork in excavation over areas (exceeding 30cm in depth 1.5m in width as well as 10sqm on plan) including dewatering as necessary of rain water/subsoil seepage water and disposal of excavated earth upto 100m and lift upto 3.6m, disposed earth to be levelled and neatly dressed. **Hard rock(blasting prohibited)**	200	cum	619.8	123960.00
5(a)	Earthwork in excavation in foundation, trenches or drains (not exceeding 1.5m in width as well as 10sqm on plan) including dewatering as necessary of rain water/subsoil seepage water and dressing of sides and ramming of bottoms, lift upto 3.6m, including getting out the excavated soil and disposal of surplus excavated soil as directed, within a lead of 100m:**All kinds of soil.**	4630	cum	166.4	770432.00
5(b)	Earthwork in excavation in foundation, trenches or drains (not exceeding 1.5m in width as well as 10sqm on plan) including dewatering as necessary of rain water/subsoil seepage water and dressing of sides and ramming of bottoms, lift upto 3.6m, including getting out the excavated soil and disposal of surplus excavated soil as directed, within a lead of 100m:**Ordinary rock.**	2570	cum	275.85	708934.50

BILL OF QUANTITY & PRICE SCHEDULE (Annexure-I)

Name of Project: 400/220 kV substation at PGCIL Neemuch site in Madhya Pradesh.

Name of Work : Site levelling work & Construction of Tower & Equipments foundations, Cable trench, Road, Drain, Fencing, Fire Fighting Pump House & Water tank (PKG-I) of 400/220 kV substation at PGCIL Neemuch site in Madhya Pradesh

Name of the Customer : M/s POWERGEID CORPORATION OF INDIA LTD.

Tender Specification No.: TBSM/NEEMUCH/CIVIL/PKG-I/TENDER/22-23 DATE: 27.10.2022

S.No.	Description of Item	Quantity	Unit	Unit Rate (Rs.)	Total Amount (Rs.)
5(c)	Earthwork in excavation in foundation, trenches or drains (not exceeding 1.5m in width as well as 10sqm on plan) including dewatering as necessary of rain water/subsoil seepage water and dressing of sides and ramming of bottoms, lift upto 3.6m, including getting out the excavated soil and disposal of surplus excavated soil as directed, within a lead of 100m:**Hard rock(requiring blasting)**	2563	cum	460.19	1179466.97
5(d)	Earthwork in excavation in foundation, trenches or drains (not exceeding 1.5m in width as well as 10sqm on plan) including dewatering as necessary of rain water/subsoil seepage water and dressing of sides and ramming of bottoms, lift upto 3.6m, including getting out the excavated soil and disposal of surplus excavated soil as directed, within a lead of 100m:**Hard rock(blasting prohibited)**	500	cum	656.7	328350.00
6(a)	Extra for every additional lift of 1.5 m or part thereof in excavation /banking excavated or stacked materials:All kinds of soil.	100	cum	51.75	5175.00
6(b)	Extra for every additional lift of 1.5 m or part thereof in excavation /banking excavated or stacked materials:Ordinary or hard rock.	100	cum	92.8	9280.00
7.1	Excavating trenches of required width for pipes, cables, etc including excavation for sockets, and dressing of sides, ramming of bottoms, depth upto 3.0 m including getting out the excavated soil, and then returning the soil as required, in layers not exceeding 20cm in depth including consolidating each deposited layer by ramming,watering etc. (as per PGCIL technical specification) and disposing of surplus excavated soil as directed within a lead of 100m.**All kinds of soil:Pipes, cables etc, not exceeding 80mm dia.**	15	RM	138.05	2070.75
7.2	Excavating trenches of required width for pipes, cables, etc including excavation for sockets, and dressing of sides, ramming of bottoms, depth upto 3.0 m including getting out the excavated soil, and then returning the soil as required, in layers not exceeding 20cm in depth including consolidating each deposited layer by ramming,watering etc. (as per PGCIL technical specification) and disposing of surplus excavated soil as directed within a lead of 100m.**All kinds of soil:Pipes, cables etc. exceeding 80mm dia. but notexceeding 300 mm dia.**	15	RM	225.45	3381.75
7.3	Excavating trenches of required width for pipes, cables, etc including excavation for sockets, and dressing of sides, ramming of bottoms, depth upto 3.0 m including getting out the excavated soil, and then returning the soil as required, in layers not exceeding 20cm in depth including consolidating each deposited layer by ramming,watering etc. (as per PGCIL technical specification) and disposing of surplus excavated soil as directed within a lead of 100m.All kinds of soil**:Pipes, cables etc. exceeding 300mm dia butnot exceeding 600mm**	15	RM	352	5280.00
8	Filling available excavated earth (including rock) in trenches, plinth, sides of foundations, etc., in layers not exceeding 20cm in depth, consolidating each deposited layer by ramming and watering, lead upto 100m and lift upto 3.6m.	11020	cum	125.75	1385765.00
9	Supplying and filling in plinth with Jamuna/local sand under floors including watering, ramming, consolidating and dressing etc all complete	10	cum	810.82	8108.20
10	Supplying, filling and compacting CNS materials as per IS: 9451 at the site under floors, foundations, roads, cable trenches, drains, etc. including royalty, carriage etc. all complete, for all leads and lift with all labour, material, tools, tackles, equipments, safeguards & incidentals as necessary as per specification and direction - of - Engineer -in- charge.	50	cum	332.55	16627.50
11	Supplying, filling and compacting stone boulders, hard core of stone ballast etc mixed with sand at the site under floors, foundations, roads, cable trenches, drains, etc. in layers not exceeding 200mm thickness including royalty, carriage etc. all complete, for all leads and lift with all labour, material, tools, tackles, equipments, safeguards & incidentals as necessary as per specification and direction - of - Engineer -in- charge.	200	cum	1292	258400.00
12(a)	Carriage & disposal of surplus excavated earth/rock beyond initial lead by mechanical means not necessarily all the times on pucca roads, including loading, unloading, dressing of excavated material, etc., complete as per specifications **:Lead upto 1 km.**	6330	cum	98.34	622492.20

BILL OF QUANTITY & PRICE SCHEDULE (Annexure-I)

Name of Project: 400/220 kV substation at PGCIL Neemuch site in Madhya Pradesh.

Name of Work : Site levelling work & Construction of Tower & Equipments foundations, Cable trench, Road, Drain, Fencing, Fire Fighting Pump House & Water tank (PKG-I) of 400/220 kV substation at PGCIL Neemuch site in Madhya Pradesh

Name of the Customer : M/s POWERGEID CORPORATION OF INDIA LTD.

Tender Specification No.: TBSM/NEEMUCH/CIVIL/PKG-I/TENDER/22-23 DATE: 27.10.2022

S.No.	Description of Item	Quantity	Unit	Unit Rate (Rs.)	Total Amount (Rs.)
12(b)	Carriage & disposal of surplus excavated earth/rock beyond initial lead by mechanical means not necessarily all the times on pucca roads, including loading, unloading, dressing of excavated material, etc., complete as per specifications :**Lead from 1Km to 2 km.**	2110	cum	111.5	235265.00
13(a)	Supplying chemical emulsion in sealed containers including delivery as specified:**Chloropyriphos emulsifiable concentrate of 20%**	40	litre	157.45	6298.00
14	Diluting & injecting chemical emulsion for PRE-CONSTRUCTIONAL ANTI-TERMITE treatment and creating a continuous chemical barrier under and all around the column pits, wall trenches, basement excavation, top surface of plinth filling, junction of wall & floor, along the external perimeter of building, expansion joints, over the top surface of consolidated earth on which apron is to be laid, surroundings of pipes and conduits, etc complete as per specifications (Plinth area of the building at ground floor only shall be measured for payment).	100	Sqm	131.9	13190.00
15	Providing and laying damp proof course 50mm thick cement concrete 1:1.5:3 (1 Cement:1.5 coarse sand : 3 graded stone aggregate 12.5 mm nominal size) .	10	Sqm	293.35	2933.50
16	Applying a coat of residual petroleum bitumen of penetration 80/100 of approved quality using 1.7 kg per sqm on damp proof course after cleaning the surface with brushes and finally with a piece of cloth lightly soaked in kerosene oil.	10	Sqm	88.05	880.50
17	Extra for providing and mixing water proofing material in Cement Concrete work in doses by weight of cement as per manufacturer's specification:	3580	1 kg per 50 kg of cement	41.73	149393.40
18(a)	Providing and laying in position cement concrete of specified grade excluding the cost of centering and shuttering:**1:4:8 (1 cement : 4 fine sand : 8 graded stone aggregate 40 mm nominal size)**	680	cum	4148.54	2821007.20
18(b)	Providing and laying in position cement concrete of specified grade excluding the cost of centering and shuttering:**1:3:6 (1 cement : 3 fine sand : 6 graded stone aggregate 40 mm nominal size)**	10	cum	4415.45	44154.50
18(c)	Providing and laying in position cement concrete of specified grade excluding the cost of centering and shuttering:**1:2:4 (1 cement : 2 coarse sand : 4 graded stone aggregate 20 mm nominal size)**	20	cum	4943.8	98876.00
19(a)	Providing and laying in position specified grade of reinforced cement concrete excluding the cost of centering, shuttering, finishing and reinforcement - **All work up to plinth level :1:1.5:3 (1 cement : 1.5 coarse sand : 3 graded stone aggregate 20 mm nominal size)**	10	cum	5570.21	55702.10
20	Providing & fixing in position M25 precast cement concrete trench covers or perforated covers wherever necessary at various elevations in all kinds of work including moulding, formwork, mixing, laying out, compacting and curing, storing, transportation, erection without damage, setting in position with cement and sand mortar, grouting etc all as per specs, drawings and directions of Engr-in-Charge but excluding the cost of reinforcement, inserts, edge angles, etc. (Note:- Cement content considered in M-25 is @330 kg/cum, Excess/less cement used as per design mix is payable/recoverable separately)	80	cum	5176.44	414115.20
21	Grouting of block outs, pockets, foundations, bolts holes and underside of base plates with cement, sand aggregate (of size 6 mm and down) grout 1:1:2 with non-shrink additive/grouting compound and shall be of strength not less than M30 including placing, curing, cleaning, surface preparation, testing, etc. complete with labour, materials, equipment, handling, testing, etc. all complete as per specifications, drawings and instructions of the Engineer.	30	cum	11197.67	335930.10
22(i)	Providing and laying in position machine batched, machine mixed and machine vibrated design mix cement concrete of specified grade for RCC work including pumping of cocrete to site of laying but excluding the cost of centering, shuttering, finishing and reinforcement including admixtures in recommended proportions (as per IS 9103) to accelerate, retrard setting of concrete, improve workability without impairing strength and durability. - M25 grade. (Note:- Cement content considered in M-25 is @330 kg/cum, Excess/less cement used as per design mix is payable/recoverable separately):**All works up to plinth level**	3690	cum	5887.43	21724616.70

BILL OF QUANTITY & PRICE SCHEDULE (Annexure-I)

Name of Project: 400/220 kV substation at PGCIL Neemuch site in Madhya Pradesh.

Name of Work : Site levelling work & Construction of Tower & Equipments foundations, Cable trench, Road, Drain, Fencing, Fire Fighting Pump House & Water tank (PKG-I) of 400/220 kV substation at PGCIL Neemuch site in Madhya Pradesh

Name of the Customer : M/s POWERGEID CORPORATION OF INDIA LTD.

Tender Specification No.: TBSM/NEEMUCH/CIVIL/PKG-I/TENDER/22-23 DATE: 27.10.2022

S.No.	Description of Item	Quantity	Unit	Unit Rate (Rs.)	Total Amount (Rs.)
22(ii)	Providing and laying in position machine batched, machine mixed and machine vibrated design mix cement concrete of specified grade for RCC work including pumping of cocrete to site of laying but excluding the cost of centering, shuttering, finishing and reinforcement including admixtures in recommended proportions (as per IS 9103) to accelerate, retrard setting of concrete, improve workability without impairing strength and durability. - M25 grade. (Note:- Cement content considered in M-25 is @330 kg/cum, Excess/less cement used as per design mix is payable/recoverable separately):**All works above plinth level to floor V level**	170	cum	6691	1137470.00
23	Add for using extra cement in the items of design mix over and above the specified cement content therein.	2700	Quintal	533.82	1441314.00
24(a)	Centering and shuttering including strutting, propping etc. and removal of form for all height : **Foundations, footings, bases of columns, etc. for mass concrete.**	2460	Sqm	184.42	453673.20
24(b)	Centering and shuttering including strutting, propping etc. and removal of form for for all height : **Walls (any thickness) including attached pilasters, butteresses, plinth and string courses etc.**	7966	Sqm	369.24	2941513.54
24(c)	Centering and shuttering including strutting, propping etc. and removal of form for for all height : **Suspended floors, roofs, landings, balconies and access platform.**	148	Sqm	413.62	61215.76
24(d)	Centering and shuttering including strutting, propping etc. and removal of form for for all height :**Lintels, beams, plinth beams, girders, bressumers,chajjas and cantilevers.**	135	Sqm	333.23	44986.05
24(e)	Centering and shuttering including strutting, propping etc. and removal of form for for all height : **Columns, Pillars, Piers, Abutments, Posts and Struts.**	4544	Sqm	454.41	2065025.35
25(a)	Reinforcement steel (TMT/ HYSD) of grade Fe-500D conforming to IS :1786 of approved make of PGCIL for R.C.C. work including supplying, straightening, cutting, bending, placing in position and binding including chair and laps etc all complete as per specification at all level and height :**Including supply and straightening, cutting,bending, binding, (i/c cost of binding wire), placing in position, etc., all labour & material, complete.**	58200	Kg	79.12	4604784.00
25(b)	Reinforcement steel (TMT/ HYSD) of grade Fe-500D conforming to IS :1786 of approved make of PGCIL for R.C.C. work including supplying, straightening, cutting, bending, placing in position and binding including chair and laps etc all complete as per specification at all level and height **:Excluding supply and straightening, cutting,bending, binding, (i/c cost of binding wire), placing in position, etc., all labour & material, complete.**	232770	Kg	11	2560470.00
26	Structural steel work welded in built up sections like edge protection angles, pipes, insert plates with lugs & framed work including providing, cutting, hoisting, fixing in position/ embedding in concrete and applying a priming coat of approved steel primer all complete.	61760	Kg	79	4879040.00
27	Structural steel work riveted, bolted or welded in built up sections, trusses and framed work, including providing, cutting, hoisting, fixing in position and applying a priming coat of approved steel primer all complete.	4500	Kg	92	414000.00
28(a)	Steelwork welded in built up sections/framed work including providing, cutting, hoisting, fixing in position and applying a priming coat of approved steel primer using structural steel etc., as required:**In covering of floors/trenches of Pump house building with chequered plates, stringers, treads, landings, etc., of staircases involving use of chequered plates, wherever required, all complete.**	1000	Kg	86.22	86220.00
29	Galvanised steel work for rung ladder, Handrail, edge protection angles, pipes, insert plates with lugs & framed work including providing, cutting, hoisting, fixing in position/ embedding in concrete and applying a priming coat of approved primer all complete. (Mass of Zinc Coating= 750 gm/ sqm)	150	Kg	86.9	13035.00
30	Brick work with common burnt clay F.P.S. bricks as per Technical Specification of class designation 7.5 in foundation and plinth including weep holes: **Cement mortar 1:6 (1 cement : 6 coarse sand)**	240	cum	4524.1	1085784.00
31	Brick work with clay flyash F.P.S. bricks as per Technical Specification of class designation 7.5 in foundation and plinth including weep holes: **Cement mortar 1:6 (1 cement : 6 coarse sand)**	10	cum	3981	39810.00

BILL OF QUANTITY & PRICE SCHEDULE (Annexure-I)

Name of Project: 400/220 kV substation at PGCIL Neemuch site in Madhya Pradesh.

Name of Work : Site levelling work & Construction of Tower & Equipments foundations, Cable trench, Road, Drain, Fencing, Fire Fighting Pump House & Water tank (PKG-I) of 400/220 kV substation at PGCIL Neemuch site in Madhya Pradesh

Name of the Customer : M/s POWERGEID CORPORATION OF INDIA LTD.

Tender Specification No.: TBSM/NEEMUCH/CIVIL/PKG-I/TENDER/22-23 DATE: 27.10.2022

S.No.	Description of Item	Quantity	Unit	Unit Rate (Rs.)	Total Amount (Rs.)
32	Brick work with common burnt clay F.P.S.bricks as per Technical Specification of class designation 7.5 in superstructure above plinth level up to floor V level in all shapes and sizes including weep holes : **Cement mortar 1:6 (1 cement : 6 coarse sand)**	50	cum	5355.29	267764.50
33	Brick work with clay flyash F.P.S.bricks as per Technical Specification of class designation 7.5 in superstructure above plinth level up to floor V level in all shapes and sizes including weep holes : **Cement mortar 1:6 (1 cement : 6 coarse sand)**	10	cum	4812.28	48122.80
34	Half brick masonry with common burnt clay F.P.S. bricks as per Technical specification of class designation 7.5 in foundations and plinth in:**cement mortar 1:4 (1 cement : 4 coarse sand)**	10	Sqm	562.7	5627.00
35	Half brick masonry with common burnt clay F.P.S.bricks as per Technical specification of class designation 7.5 in superstructure above plinth level up to floor V level**:Cement mortar 1:4 (1 cement :4 coarse sand)**	10	Sqm	653.36	6533.60
36	Extra for providing and placing in position 2 Nos. 6mm dia. M.S. bars at every third course of half brick masonry.	10	Sqm	48.21	482.10
37	6mm cement plaster to ceiling of mix:**1:3 (1 cement : 3 fine sand)**	140	Sqm	138.39	19374.60
38	12mm cement plaster on the wall/ concrete surface in the mix:**1:6 (1 cement: 6 fine sand)**	210	Sqm	154.72	32491.20
39	12mm cement plaster finished with a floating coat of neat cement in the mix:**1:4 (1cement :4 fine sand)**	2420	Sqm	203.19	491719.80
40	18mm cement plaster on roof in two coats with under layer 12mm thick cement plaster 1:5 (1 cement :5 coarse sand) finished with a top layer of 6mm thick 1:6 cement plaster(1cement : 6 fine sand)	210	Sqm	245.49	51552.90
41	Extra for providing and mixing water proofing material in cement plaster work in proportion recommended by the manufacturer	100	Per bag of 50 KG cement used in mix	44.12	4412.00
42	Add for plaster drip course/ groove in plastered surface or moulding to R.C.C. projections.	90	RM	34.15	3073.50
43	Making plinth protection of 50mm thick cement concrete 1:2:4 (1 cement : 2 coarse sand : 4 graded stone aggregate 20mm nominal size) laid over 75mm thick bed of dry brick balast 40mm nominal size well rammed and consolidated and grouted with fine sand including finishing the top smooth.	60	Sqm	426.82	25609.20
44	Providing an fixing chiken wire mesh on wall, floor & ceiling surface all complete as per drawing/specification and direction of Engineer-in charge.	100	Sqm	48.3	4830.00
45	Forming groove of uniform size from 12X12mm and upto 25X15mm in plastered surface and joints of ceiling and wall as per approved pattern using wooden battens, nailed to the underlayer including removal of wooden battens, repairs to the edges of plaster panel and finishing the groove complete as per specifications and directions of the Engineer-in-charge.	90	RM	63.35	5701.50
46	52 mm thick CC flooring with "Hardcrete" concrete hardner topping under layer 40 mm thick CC 1:2:4 (1 cement: 2 coarse sand: 4 graded stone aggregate 20mm nominal size) and top layer 12 mm thick Hardcrete cement hardner consisting of mix 1:2 (1 cement hardner mix: 2 stone aggregate 6mm nominal size) by volume with which Hardcrete hardening compound of approved quality is mixed @ 2 liter Hardcrete hardener per 50 Kg of cement including cement slurry or as per manufacturer's specifications. This includeds the cost of cement slurry, but excluding the cost of nosing of steps etc., complete.	95	Sqm	516.84	49099.80
47	Providing and fixing glass strips in joints of terrazo/ cement concrete floors:**40 mm wide and 4 mm thick**	80	RM	48.59	3887.20
48	Cement plaster skirting (up to 15 cm height) with cement mortar 1:3 (1 cement : 3 coarse sand) finished with metallic concrete hardner in a same ratio as floor finished with a floating coat of neat cement. **:21 mm thick**	10	Sqm	328.96	3289.60
49	Providing and applying white cement based putty of average thickness 1mm, of approved brand and manufacturer, over the plastered wall surface to prepare the surface even and smooth as directed by engineer-in-charge for all level and height.	10	Sqm	87.35	873.50
50	Providing and applying plaster of paris putty of 2 mm thickness over plastered surface to prepare the surface even and smooth complete at all level and height	125	Sqm	117.08	14635.00

BILL OF QUANTITY & PRICE SCHEDULE (Annexure-I)

Name of Project: 400/220 kV substation at PGCIL Neemuch site in Madhya Pradesh.

Name of Work : Site levelling work & Construction of Tower & Equipments foundations, Cable trench, Road, Drain, Fencing, Fire Fighting Pump House & Water tank (PKG-I) of 400/220 kV substation at PGCIL Neemuch site in Madhya Pradesh

Name of the Customer : M/s POWERGEID CORPORATION OF INDIA LTD.

Tender Specification No.: TBSM/NEEMUCH/CIVIL/PKG-I/TENDER/22-23 DATE: 27.10.2022

S.No.	Description of Item	Quantity	Unit	Unit Rate (Rs.)	Total Amount (Rs.)
51(a)	Applying priming coat:With ready mixed red oxide zinc chromate primer of approved brand and manufacture on steel galvanised iron/ steel works.	100	Sqm	15.19	1519.00
51(b)	Applying priming coat:Applying one coat of water thinnable cement primer of approved brand and manufacture on RCC/ BRICK wall surface at all level and height:	100	Sqm	36.27	3627.00
52	Finishing RCC/ BRICK walls with water proofing cement paint of gray color/ approved color by customer at all levels and heights: **New work (Two or more coats applied @ 3.84 kg/10 sqm).**	650	Sqm	56.21	36536.50
53(a)	Painting with synthetic enamel paint of approved brand and manufacture of required colour to give an even shade:**Two or more coats on new work of approved brand and manufacture**	30	Sqm	74.91	2247.30
54(a)	Wall/ Ceiling painting with premium acrylic emulsion paint of interior grade, having VOC (Volatile Organic Compound) content less than 50 grams/ litre. of approved brand and manufacture, including applying additional coats wherever required to achieve even shade and colour at all level and height:**Two or more coats on new work**	230	Sqm	68.74	15810.20
55	White washing with lime to give an even shade: **Three or more coats on new work.**	140	Sqm	16.97	2375.80
56(a)	Finishing walls/ Slab with Premium Acrylic Smooth exterior paint with Silicone additives of required shade at all level and height:**New work : (Two or more coat applied @ 1.43 ltr/10 sqm over and including primer coat of exterior primer applied @ 2.20 kg/10 sqm).**	210	Sqm	91.61	19238.10
57(a)	Providing and fixing aluminium work for doors, windows, ventilators and partitions with extruded builtup standard tubular and other sections of approved make conforming to IS: 733 and IS:1285, fixed with rawl plugs and screws or with fixing clips or with expansion hold fasteners including necessary filling up of gaps at junctions at top , bottom and sides with required PVC/neoprene felt, etc. Aluminium sections shall be smooth , rust free, straight, mitred and jointed mechanically wherever required including cleat angle, aluminium snap beading for glazing/panelling, CP brass/stainless steel screws, all complete as per architectural drawings and direction of Engineer-in-charge. (Glazing and panelling to be paid for separately)**:For Fixed Portion,Powder coated aluminium (minimum thickness of podwer caoting 50 micron)**	200	Kg	334.55	66910.00
57(b)	Providing and fixing aluminium work for doors, windows, ventilators and partitions with extruded builtup standard tubular and other sections of approved make conforming to IS: 733 and IS:1285, fixed with rawl plugs and screws or with fixing clips or with expansion hold fasteners including necessary filling up of gaps at junctions at top , bottom and sides with required PVC/neoprene felt, etc. Aluminium sections shall be smooth , rust free, straight, mitred and jointed mechanically wherever required including cleat angle, aluminium snap beading for glazing/panelling, CP brass/stainless steel screws, all complete as per architectural drawings and direction of Engineer-in-charge. (Glazing and panelling to be paid for separately)**:For shutters of doors, windows & ventilators including providing and fixing hinges/pivots and fittings wherever required including the cost of PVC/neoprene gasket required ,**Powder coated aluminium (minimum thickness of podwer caoting 50 micron)	500	Kg	391.32	195660.00
58(a)	Providing and fixing glazing in door, window, ventilator shutters and partitions, etc., with PVC/neoprene gasket, etc., complete as per the architectural drawings and directions of Engineer-in-charge:**With float glass panes of 5.5mm (minimum) thickness (weight not less than 13.75kg/sqm)**	10	Sqm	886.51	8865.10
59	Providing and fixing Aluminum grills of required pattern in frames of windows etc. with Aluminium flats, square or round bars etc. all complete. (Only weight of grills to be measured for payment).	90	kg	355.37	31983.30
60(a)	Providing and fixing double action hydraulic floor spring of approved brand and manufacture conforming to IS : 6315, having brand logo embossed on the body / plate with double spring mechanism and door weight upto 125 kg, for doors, including cost of cutting floors, embedding in floors as required and making good the same matching to the existing floor finishing and cover plates with brass pivot and single piece M.S. sheet outer box with slide plate etc. complete as per the direction of Engineer-in-charge:**With stainless steel cover plate minimum 1.25 mm thickness**	1	Each	1777.08	1777.08

BILL OF QUANTITY & PRICE SCHEDULE (Annexure-I)

Name of Project: 400/220 kV substation at PGCIL Neemuch site in Madhya Pradesh.

Name of Work : Site levelling work & Construction of Tower & Equipments foundations, Cable trench, Road, Drain, Fencing, Fire Fighting Pump House & Water tank (PKG-I) of 400/220 kV substation at PGCIL Neemuch site in Madhya Pradesh

Name of the Customer : M/s POWERGEID CORPORATION OF INDIA LTD.

Tender Specification No.: TBSM/NEEMUCH/CIVIL/PKG-I/TENDER/22-23 DATE: 27.10.2022

S.No.	Description of Item	Quantity	Unit	Unit Rate (Rs.)	Total Amount (Rs.)
61	Providing and fixing IS:3564 marked aluminium die cast body tubular type universal hydraulic door closer of approved quality and make with accessories and screws complete.	1	Each	358.96	358.96
62	Providing and fixing chromium plated brass 100 mm mortice latch and lock with 6 levers and a pair of lever handles with necessary screws etc. complete(best make of approved quality).	1	Each	590.2	590.20
63(a)	Providing and fixing aluminium sliding door bolts anodised (anodic coating not less than grade AC 10 as per IS: 1868) transparent or dyed to required colour or shade with nuts and screws etc. complete: **300 X 16 mm**	1	Each	184.35	184.35
64(a)	Providing and fixing aluminium handles anodised (anodic coating not less than grade AC 10 as per IS: 1868) transparent or dyed to required colour or shade with necessary screws etc., complete: **125mm**	1	Each	43.86	43.86
65	Providing and fixing aluminium hanging floor door stopper ISI marked anodised (anodic coating not less than grade AC 10 as per IS : 1868)transparent or dyed to required colour and shade with necessary screws etc. complete.	1	Each	23.68	23.68
66	Supplying and fixing of seamless galvalume motorised rolling shutters of approved make as per customer specfication clause no 13.22.	10	Sqm	2019.89	20198.90
67	Providing and fixing 2 mm thick M.S. sheet door with frame of 45x45x5 mm angle iron and 3 mm M.S. gussets plates at the junction and corners, all necessary fittings complete, including applying a priming coat of approved steel primer**:Using M.S. Angle 45x45x5 mm for diagonal braces**	5	Sqm	2662.05	13310.25
68	Providing and fixing factory made ISI marked steel glazed doors, windows and ventilators, side/top/centre hung, with beading and all members such as F7D, F4B, K11B and K12B etc. complete of standard rolled steel sections, joints mitred and flash butt welded and sash bars tenoned and riveted, including providing and fixing of hinges, pivots, including priming coat of approved steel primer, but excluding the cost of other fittings, complete all as per approved design, (sectional weight of only steel members shall be measured for payment):**Fixing with 15x3 mm lugs 10 cm long embedded in cement concrete block block 15x10x10 cm of C.C.**	150	kg	104.76	15714.00
69	Providing and fixing precoated galvanised iron profile sheets (size, shape and pitch of corrugation as approved by Engineer-in-charge) 0.50 mm (+ 0.05 %), total coated thickness with zinc coating 120 gm per sqm as per IS:277 in 240 mpa steel grade, 5-7 microns epoxy primer on both side of the sheet and polyester top coat 15-18 microns. Sheet should have protective guard film of 25 microns minimum to avoid scratches during transportation and should be supplied in single length upto 12metre or as desired by Engineer-in-charge. The sheet shall be fixed using self drilling /self tapping screws of size (5.5x 55mm) with EPDM seal, complete upto any pitch in horizontal/ vertical or curved surfaces excluding the cost of purlins, rafters and trusses and including cutting to size and shape wherever required.	200	Sqm	473.40	94680.00
70(a)	Providing and fixing on wall face unplasticised - Rigid PVC rain water pipes conforming to IS : 13592 Type A including jointing with seal ring conforming to IS : 5382 leaving 10 mm gap for thermal expansion, (i) Single socketed pipes including all fittings like bends, bat clamps gratings etc.:**110 mm diameter**	60	RM	211.92	12715.20
71(a)	Providing and fixing on wall face unplasticised - PVC moulded fittings/ accessories for unplasticised - Rigid PVC rain water pipes conforming to IS : 13592 Type A including jointing with seal ring conforming to IS : 5382 leaving 10 mm gap for thermal expansion Single socketed pipes:**110 mm bend 87.5 degree**	5	Each	99.94	499.70
71(b)	Providing and fixing on wall face unplasticised - PVC moulded fittings/ accessories for unplasticised - Rigid PVC rain water pipes conforming to IS : 13592 Type A including jointing with seal ring conforming to IS : 5382 leaving 10 mm gap for thermal expansion Single socketed pipes:**110 shoe plain**	5	Each	87.15	435.75

BILL OF QUANTITY & PRICE SCHEDULE (Annexure-I)

Name of Project: 400/220 kV substation at PGCIL Neemuch site in Madhya Pradesh.

Name of Work : Site levelling work & Construction of Tower & Equipments foundations, Cable trench, Road, Drain, Fencing, Fire Fighting Pump House & Water tank (PKG-I) of 400/220 kV substation at PGCIL Neemuch site in Madhya Pradesh

Name of the Customer : M/s POWERGEID CORPORATION OF INDIA LTD.

Tender Specification No.: TBSM/NEEMUCH/CIVIL/PKG-I/TENDER/22-23 DATE: 27.10.2022

S.No.	Description of Item	Quantity	Unit	Unit Rate (Rs.)	Total Amount (Rs.)
72(a)	Providing and fixing on wall face unplasticised - PVC clips of approved design to unplasticised - Rigid PVC rain water pipes by means of 50x50x50 mm hard wood plugs, screwed with MS screws of required length including cutting brick work and fixing in cement mortar 1:4 (1 cement: 4 coarse sand) and making good the wall etc complete:**110 mm**	5	Each	175.15	875.75
73	Making khurras 45X45cm with average minimum thickness of 5cm cement concrete 1:2:4 (1 cement: 2 coarse sand: 4 graded stone aggregate of 20mm nominal size) over PVC sheet 1mX1mX400micron, finished with 12mm cement plaster 1:3 (1 cement: 3 coarse sand) and a coat of neat cement rounding the edges and making and finishing the outlet complete.	5	Each	178.17	890.85
74(a)	Providing and laying integral cement based water proofing treatment including preparation of surface as required for treatment of roofs, balconies, terraces etc consisting of following operations: a) Applying a slurry coat of neat cement using 2.75 kg/sqm. of cement admixed with water proofing compound conforming to IS. 2645 and approved by Engineer-in-charge over the RCC slab including adjoining walls upto300mm height including cleaning the surface before treatment. b)Laying brick bats with mortar using broken bricks/brick bats 25 mm to115mm size with 50% of cement mortar 1:5 (1 cement : 5 coarse sand)admixed with water proofing compound conforming to IS : 2645 and approved by Engineer-in-charge over 20 mm thick layer of cement mortar of mix 1:5 (1 cement :5 coarse sand) admixed with waterproofing compound conforming to IS : 2645 and approved by Engineer-in-charge to required slope and treating similarly the adjoining walls upto 300 mm height including rounding of junctions of walls and slabs c)After two days of proper curing applying a second coat of cement slurry using 2.75kg/ sqm of cement admixed with water proofing compound conforming to IS : 2645 and approved by Engineer-in-charge. d)Finishing the surface with 20 mm thick jointless cement mortar of mix1:4 (1 cement :4 coarse sand) admixed with water proofing compound conforming to IS : 2645 and approved by Engineer-in-charge including laying glass fibre cloth of approved quality in top layer of plaster and finally finishing the surface with trowel with neat cement slurry and making pattern of 300x300 mm square 3mm deep. e) The whole terrace so finished shall be flooded with water for a minimum period of two weeks for curing and for final test. All above operations to be done in order and as directed and specified by the Engineer-in-Charge : With average thickness of 120mm and minimum thickness at khurra as 65 mm.	80	Sqm	954.2	76336.00
75	Preparation and consolidation of sub grade with power road roller of 8 to 12 tonne capacity after excavating earth to an average of 22.5 cm depth,dressing to camber and consolidating with road roller including making good the undulations etc and re-rolling the sub grade and disposal of surplus earth lead upto 50 metres.	13370	sqm	90.1	1204637.00
76	Extra for compaction of earthwork in embankment under optimum moisture conditions to give at least 95% of the maximum dry density (Proctor density)	13370	cum	10.7	143059.00
77(a)	Suppling and stacking at site :90 mm to 45 mm size stone aggregate	1030	cum	1278.69	1317050.70
77(b)	Suppling and stacking at site :63 mm to 45 mm size stone aggregate	1030	cum	1386.53	1428125.90
77(c)	Suppling and stacking at site :53 mm to 22.5 mm size stone aggregate	1030	cum	1475.02	1519270.60
77(d)	Suppling and stacking at site :Stone screening 13.2 mm nominal size (type A)	420	cum	1439.66	604657.20
77(e)	Suppling and stacking at site :Stone screening 11.2 mm nominal size (type B)	210	cum	1398.19	293619.90
77(f)	Suppling and stacking at site :moorum	230	cum	563.01	129492.30
78(a)	Laying, spreading and compacting stone aggregates of specified sizes to WBM specifications in uniform thickness, hand picking, rolling with 3-wheeled road / vibratory roller 8-10 tonne capacity in stages to proper grade and camber, applying and brooming requisite type of screening/ binding materials to fill up interstices of coarse aggregate, watering and compacting to the required density etc., all complete. (Payment will be made for compacted layers only. Stone aggregates, screenings & moorum to be paid separately.):**Subbase with stone aggregate 90mm to 45mm including stone screening 13.2mm size and moorum/blinding material.**	760	cum	449.1	341316.00
78(b)	Laying, spreading and compacting stone aggregates of specified sizes to WBM specifications in uniform thickness, hand picking, rolling with 3-wheeled road / vibratory roller 8-10 tonne capacity in stages to proper grade and camber, applying and brooming requisite type of screening/ binding materials to fill up interstices of coarse aggregate, watering and compacting to the required density etc., all complete. (Payment will be made for compacted layers only. Stone aggregates, screenings & moorum to be paid separately.):**Base course with stone aggregate 63mm to 45mm including stone screening 13.2mm sizeand moorum/blinding material.**	760	cum	449.1	341316.00

BILL OF QUANTITY & PRICE SCHEDULE (Annexure-I)

Name of Project: 400/220 kV substation at PGCIL Neemuch site in Madhya Pradesh.

Name of Work : Site levelling work & Construction of Tower & Equipments foundations, Cable trench, Road, Drain, Fencing, Fire Fighting Pump House & Water tank (PKG-I) of 400/220 kV substation at PGCIL Neemuch site in Madhya Pradesh

Name of the Customer : M/s POWERGEID CORPORATION OF INDIA LTD.

Tender Specification No.: TBSM/NEEMUCH/CIVIL/PKG-I/TENDER/22-23 DATE: 27.10.2022

S.No.	Description of Item	Quantity	Unit	Unit Rate (Rs.)	Total Amount (Rs.)
78(c)	Laying, spreading and compacting stone aggregates of specified sizes to WBM specifications in uniform thickness, hand picking, rolling with 3-wheeled road / vibratory roller 8-10 tonne capacity in stages to proper grade and camber, applying and brooming requisite type of screening/ binding materials to fill up interstices of coarse aggregate, watering and compacting to the required density etc., all complete. (Payment will be made for compacted layers only. Stone aggregates, screenings & moorum to be paid separately.):**Base course with stone aggregate 53mm to 22.4 mm including stone screening 11.2mm size and moorum/blinding material.**	760	cum	449.1	341316.00
79(a)	Providing and applying tack coat using hot straight run bitumen of grade VG - 10, including heating the bitumen, spraying the bitumen with mechanically operated spray unit fitted on bitumen boiler, cleaning and preparing the existing road surface as per specifications :**On W.B.M. @ 0.75 Kg I sqm**	10130	Sqm	36.4	368732.00
79(b)	2.5 cm premix carpet surfacing with 3 cum of stone chippings 10 mm nominal size per 100 sqm and bitumen emulsion (medium setting min. 65% bitumen contents) complying with IS : 8887, using 96 kg per cum of chippings of road surface, including consolidation with road roller etc complete	10130	Sqm	149.93	1518790.90
80(a)	Providing and placing in position suitable PVC water stops conforming to IS 12200 or equivalent for construction/expansion joints between two RCC members and fixed to the reinforcement with binding wire before pouring concrete etc. complete:**Serrated with central bulb (230mm wide, 5mm thick)**	400	RM	174	69600.00
80(b)	Providing and placing in position suitable PVC water stops conforming to IS 12200 or equivalent for construction/expansion joints between two RCC members and fixed to the reinforcement with binding wire before pouring concrete etc. complete:**Serrated with central bulb (230mm wide, 6mm thick)**	10	RM	201	2010.00
81(a)	Providing and fixing in position in culvert/road crossing/building wall PVC pipes conforming to IS : 12818 including jointing with seal all complete as per drawing and specification:**150mm diameter**	10	RM	212	2120.00
82	Supplying & fixing galvanised foundation bolts including nut & washer (Mass of Zinc Coating= 610 gm/ sqm) of all dia & length in position with help of proper templates (to be supplied by contractor) all complete as per drawings & directions of Engr-in-Charge. Weight of the template shall not be measured for payment purpose.	1700	Kg	118	200600.00
83	Fixing (all dia & length) foundation bolts in position with help of proper templates including nuts, washers and template (to be supplied by contractor) all complete as per drawings & directions of Engr-in-Charge. Weight of the template shall not be measured for payment purpose.	30600	Kg	16	489600.00
84	Providing and fixing fencing of GI barbed wire consisting of galvanized MS tubular posts at 3 m intervals; GIbarded wire shall run horizontally from post to post at a spacing of 300 mm (vertically) and a cross formation in each panel,complete as per technical specification and drawing (C/ENGG/CVL/SYD/FENCE/BW/01 REV-00) and directions of Engr-in-Charge. (The rate shall be inclusive of all the labour, materials (GI barbed wire ,/Galvanised MS tubular post/galvanised MS Flat etc), earthwork i.e excavation, backfilling, disposal, CC, PCC & shuttering and erection etc all complete)	950	RM	1395	1325250.00
85	Providing and fixing gate made of medium duty MS pipe including all allied activities, all complete as per customer's specification, drawing (C/ENGG/CVL/SYD/GATE/2016/01 OF 01 REV-0 & C/ENGG/MAIN GATE /01 REV-00)and direction Engineer in charge. (Rate shall be inclusive of all labour, material items like medium duty pipe, fabrication, welding,primer, painting, Al-drops,GI pipe,fitting and fixture etc.)	10000	KG	111	1110000.00
86(a)	Providing and laying non-pressure NP2 class (light duty) R.C.C. pipes with collars jointed with stiff mixture of cement mortar in the proportion of 1:2 (1 cement : 2 fine sand) including testing of joints etc. complete : **100 mm dia. R.C.C. pipe**	10	RM	286.53	2865.30
86(b)	Providing and laying non-pressure NP2 class (light duty) R.C.C. pipes with collars jointed with stiff mixture of cement mortar in the proportion of 1:2 (1 cement : 2 fine sand) including testing of joints etc. complete : **250 mm dia. R.C.C. pipe**	40	RM	429.98	17199.20

BILL OF QUANTITY & PRICE SCHEDULE (Annexure-I)

Name of Project: 400/220 kV substation at PGCIL Neemuch site in Madhya Pradesh.

Name of Work : Site levelling work & Construction of Tower & Equipments foundations, Cable trench, Road, Drain, Fencing, Fire Fighting Pump House & Water tank (PKG-I) of 400/220 kV substation at PGCIL Neemuch site in Madhya Pradesh

Name of the Customer : M/s POWERGEID CORPORATION OF INDIA LTD.

Tender Specification No.: TBSM/NEEMUCH/CIVIL/PKG-I/TENDER/22-23 DATE: 27.10.2022

S.No.	Description of Item	Quantity	Unit	Unit Rate (Rs.)	Total Amount (Rs.)
86(c)	Providing and laying non-pressure NP2 class (light duty) R.C.C. pipes with collars jointed with stiff mixture of cement mortar in the proportion of 1:2 (1 cement : 2 fine sand) including testing of joints etc. complete : **300 mm dia. R.C.C. pipe**	40	RM	459.59	18383.60
87(a)	Providing and laying Non Pressure NP-3 R.C.C. hume pipe including collars/spigot jointed with stiff mixure of cement mortar of mix 1:2 (1 cement : 2 fine sand) including testing of joints etc all complete as per drawing and specification excluding the cost of concrete, shuttering, reinforcement, brickwork, plaster on brickwork and painting: **100mm dia**	100	RM	699.93	69993.00
87(b)	Providing and laying Non Pressure NP-3 R.C.C. hume pipe including collars/spigot jointed with stiff mixure of cement mortar of mix 1:2 (1 cement : 2 fine sand) including testing of joints etc all complete as per drawing and specification excluding the cost of concrete, shuttering, reinforcement, brickwork, plaster on brickwork and painting. **250mm dia**	20	RM	1036.41	20728.20
87(c)	Providing and laying Non Pressure NP-3 R.C.C. hume pipe including collars/spigot jointed with stiff mixure of cement mortar of mix 1:2 (1 cement : 2 fine sand) including testing of joints etc all complete as per drawing and specification excluding the cost of concrete, shuttering, reinforcement, brickwork, plaster on brickwork and painting: **300mm dia**	20	RM	1114.88	22297.60
87(d)	Providing and laying Non Pressure NP-3 R.C.C. hume pipe including collars/spigot jointed with stiff mixure of cement mortar of mix 1:2 (1 cement : 2 fine sand) including testing of joints etc all complete as per drawing and specification excluding the cost of concrete, shuttering, reinforcement, brickwork, plaster on brickwork and painting: **450mm dia**	20	RM	1669	33380.00
88	Providing weep holes in RCC including cost of 75mm dia PVC pipes & fixing them in position etc complete as per standard specification	10	RM	135.7	1357.00
89	Providing 20mm thick expansion joint and filling the same with cement mortar of 1:4 cement sand mortar.	10	RM	36.15	361.47
90(a)	Demolishing cement concrete manually/ by mechanical means including disposal of material within 50 metres lead as per direction of Engineer - in - charge: **Nominal concrete 1:3:6 or richer mix (i/c equivalent design mix)**	10	Cum	997.05	9970.50
90(b)	Demolishing cement concrete manually/ by mechanical means including disposal of material within 50 metres lead as per direction of Engineer - in - charge: Nom**inal concrete 1:4:8 or leaner mix (i/c equivalent design mix)**	10	Cum	615.15	6151.50
91	Demolishing R.C.C. work manually/ by mechanical means including stacking of steel bars and disposal of unserviceable material within 50 metres lead as per direction of Engineer - in- charge.	10	Cum	1454.5	14545.00
92	Demolishing cement mortar brick work manually/ by mechanical means including stacking of serviceable material and disposal of unserviceable material within 50 metres lead as per direction of Engineer-in-charge.	10	Cum	842.75	8427.50
				Total Amount excluding GST	**77,771,519.00**

Validate Print Help

Percentage BoQ

Tender Inviting Authority: BHEL, TBG- SubContracting Department, Sector 62 Noida, UP

Name of Work: Site levelling work & Construction of Tower & Equipments foundations, Cable trench, Road, Drain, Fencing, Fire Fighting Pump House & Water tank (PKG-I) of 400/220 kV substation at PGCIL Neemuch site in Madhya Pradesh

Contract No: TBSM/NEEMUCH/CIVIL/PKG-I/TENDER/22-23 DATE 27.10.2022

Name of the Bidder/ Bidding Firm / Company :						
PRICE SCHEDULE **(This BOQ template must not be modified/replaced by the bidder and the same should be uploaded after filling the relevent columns, else the bidder is liable to be rejected for this tender. Bidders are allowed to enter the Bidder Name and Values only)**						
NUMBER #	**TEXT #**	**NUMBER #**	**TEXT #**	**NUMBER**	**NUMBER #**	**TEXT #**
Sl. No.	**Item Description**	**Quantity**	**Units**	**Estimated Rate in Rs. P**	**TOTAL AMOUNT Without Taxes in Rs. P**	**TOTAL AMOUNT In Words**
1	**2**	**4**	**5**	**6**	**53**	**55**
1	Total amount as per rates in BOQ (as per Annexure-I) for "Site levelling work & Construction of Tower & Equipments foundations, Cable trench, Road, Drain, Fencing, Fire Fighting Pump House & Water tank (PKG-I) of 400/220 kV substation at PGCIL Neemuch site in Madhya Pradesh."- Excluding GST	1.000	Nos	77771519.00	**77771519.00**	INR Seven Crore Seventy Seven Lakh Seventy One Thousand Five Hundred & Nineteen Only
Total in Figures					**77771519.00**	INR Seven Crore Seventy Seven Lakh Seventy One Thousand Five Hundred & Nineteen Only
Quoted Rate in Figures			**Select**		**0.000**	INR Zero Only
Quoted Rate in Words		**INR Zero Only**				

	BHARAT HEAVY ELECTRICALS LIMITED **TRANSMISSION PROJECTS ENGINEERING MANAGEMENT INDUSTRY SECTOR, NOIDA (U.P.).**				
DOCUMENT No.	**TB-418-607-003-PG-NEEMUCH - PKG I**	**Rev-0**	(Prepared &	Checked)	Approved
TYPE OF DOC.	**BILL OF QUANTITY**	NAME	**PNK**	**PNK**	**PLK**
TITLE **Site levelling work & Construction of Tower & Equipment's foundations,Cable trenche,Road ,Drain ,Fencing ,Fire Fighting Pump House & Water tank.**		SIGN			
		DATE	20/10/22		20/10/22
		GROUP	**TBEM**	**W.O. No.**	
CUSTOMER	POWERGEID CORPORATION OF INDIA LTD.				
PROJECT	400/220 kV SUBSTATION AT NEEMUCH & MANDSAUR				

CONTRACT & CONFIDENTIAL
The information in this document is the property of BHARAT HEAVY ELECTRICALS LIMITED

CONTENTS

SECTION NO.	TITLE	PAGE NO.
1.	SCOPE, SPECIFIC TECHNICAL REQUIREMENT & SCHEDULE OF ITEMS	1.1 TO 1.13
2.	STANDARD TECHNICAL SPECIFICATION	NA
3.	ENCLOSURES TO THE SPECIFICATION (a) Customer Specification (b) PGCIL Standard Drawings	

Rev No.	Date	Altered	Checked	Approved				
Distribution				To	O/C			
				Copies	1	1		

SECTION - 1

SCOPE, SPECIFIC TECHNICAL REQUIREMENTS & QUANTITIES

1.1.0 SCOPE

1.1.1 The scope of work under this specification is Civil Works of 400kV Yard of 400/220kV Sub-station Neemuch (New) at Neemuch in MP being executed by BHEL on turnkey basis. The Customer is Powergrid Corporation of India Limited.

1.1.2 The Civil Works of 400kV Yard shall generally include, *but not limited to*, following:

(i) 400kV Tower & Equipment Foundation Works including DG Set & LT Transformer Foundation Works.
(ii) Cable Trench Works including precast cover works
(iii) Drainage Works
(iv) Road works including approach road connecting the s/s to main road
(v) Culvert / Pipe Crossing Works for Cable Trenches/ Drains / Road
(vi) Switchyard Barbed wire fencing including gates, etc.
(vii) Fire Fighting Pump House, Water Tank.
(viii) Any other work required for the project

1.1.3 The works to be performed in the above construction includes preparation of bar bending schedules, based on the drawings released for construction and getting the same approved by the Engineer-in-charge plus the execution of the work including providing of all labour, supervision, materials, scaffolding, power, fuel, construction equipments, tools and plants, supplies, transportation, all incidental items necessary for successful completion of the work including contractor's supervision and in strict accordance with the drawings and specifications and with inspection and testing standards. The nature of work shall generally involve excavation in all type of soil/rock including dewatering, shoring, strutting, and filling under and around structures, backfilling with available excavated earth (including rock) around completed structures, cable trenches with covers, disposal of surplus soil, steel/wooden ply formwork, providing necessary steel embedments and other inserts, drainage work, concreting, brickwork, flooring and finishing etc. and all other works in building all complete as per detailed specification, drawings and directions of Engineer-in-charge.

1.1.4 The Contractor shall execute the work as per the Field Quality Plan (FQP) which is available on POWERGRID website. All testing required shall be arranged by the Contractor at his own cost.

1.1.5 The bidder shall fully apprise himself of the prevailing conditions at the proposed site, Climatic conditions including monsoon patterns, local conditions and site specific parameters, soil parameters, availability of construction material and shall include for all such conditions and contingent measures in the bid, including those which may not have been specifically brought out in the specifications.

1.1.6 The material specification, workmanship and acceptance criteria shall be as per approved standard Field Quality Plan. In case certain item is not covered in FQP, it shall be constructed as per CPWD specification/ relevant BIS.

1.1.7 For Site clearence work refer PGCIL technical specification clause no 19.4.

1.2.0 SPECIFIC TECHNICAL REQUIREMENT

1.2.1 The specific technical requirements for the execution of civil works shall be as per Customer's specification / I.S. Codes/ CPWD Specification. In case of any conflict between these Customer's specification shall prevail.

1.3.0 BILL OF QUANTITIES

1.3.1 The Bill of Quantity cum price schedule shall be as per page 1.3 to page1.13

1.3.2 The quantities indicated in the 'Bill of Quantity cum price schedule' are indicative and can vary upto any extent, even may get deleted. Contractor shall not be entitled for any claim for any such variation in the quantities.

1.3.3 The provision of Bill of Quantity cum price schedule, specifications and drawings shall be read in conjunction with each other and in case of conflict amongst them, the clarification shall be obtained from the Engineer-in-charge whose decision shall be final and binding.

1.4.0 METHOD OF MEASURMENT:

Excavation shall be measured in cubic meters. The lateral dimensions to be considered for working out excavation quantity shall be the PCC dimension below the footing as per approved drawing. Nothing extra shall be paid for slope cutting, etc. Backfilling & disposal quantities shall be worked out based on the above dimensions only. However the contractor shall maintain the required slope and working space as per the safety /statutory requirement and its cost is deemed to be included in the quoted rate.

Where rock and soil are mixed, the measurement of the excavation shall be made as per PCC dimensions. The rock shall be stacked and measured in stack. The net quantity of the rock shall be arrived at by applying deduction of 50% to allow for voids in stacks.

Where soil, soft rock (ordinary rock), & hard rock are mixed, the measurement of the excavation shall be made as per PCC dimensions. Excavated materials comprising of the soft rock (ordinary rock) and hard rock shall be stacked separately, measured in stacks, and each reduced by 50% to allow for voids to arrive at the quantity payable under soft rock (ordinary rock) and hard rock .

In no case, the sum of net quantities shall exceed the total quantity of the excavated materials.

Clause No. 2.1.0 of CPWD Specification Volume-I shall be followed for classification of soils.

For other items, unless otherwise described the method of measurement as described in 'Method of Measurement of Building and Civil Engineering Works'-IS 1200(Part I to XXV) latest edition of BIS shall be followed.

Customer technical specification Clause No. 20.1 TO 20.26 under head 20.0 "MODE OF MEASURMENT" for mode of measurement of civil works shall not be applicable in this contract. However Mode of Measurement for **site levelling works** shall be as per customer technical specification clause 20.27 under head .20.0 "MODE OF MEASURMENT".

BILL OF QTY CUM PRICE SCHEDULE

Name of Project: 400/220 kV substation at PGCIL Neemuch site

Name of Work: Site levelling work & Construction of Tower & Equipments foundations,Cable trenche,Road ,Drain ,Fencing ,Fire Fighting Pump House & Water tank. (PKG-I)

S. No.	Description of Item	Quantity	Unit	Unit Rate (Rs)	Amount) (Rs)
1	Earthwork in excavation & filling in all types of soil and soft/disintegrated rock in open areas/nallas/channels, to the requiredslopes, shapes, levels, elevations and profile, including trimming of bottom and slopes of excavation, bailing out rain(dewatering), pumping, removal of slush, preparing embankments/marginal banks, loosening, dressing, spreading material in layers notexceeding 200mm, as per direction of Engineer-in-Charge, water flooding, compacting to achieve 95% consolidation at optimum moisturecontent, finishing etc. all complete, for all leads and lifts within leveling boundary, including disposal of surplus earth andstacking of unsuitable material within a lead of 2.0 Km beyond substation boundary, with all labour, material, tools, tackles andequipment, safeguards and incidentals, Royalty,taxes etc. as necessary, as per drawings, specification and directions of theEngineer-in-Charge. Clearing of jungle is included in this item. (Only excavation/cutting will be measured for payment purpose.)	16500	cum	87.5	1443750
2	Supply of earth (excluding rock & boulders) at site including royalty, carriage and filling in specified areas in layers notexceeding 200mm in depth, compacting under optimum moisture condition to achieve 95% of Proctor density, finishing etc. allcomplete, for all leads & lifts, with all labour, material, tools, tackles, equipments, safeguards & incidentals as necessary as perdrawings, specification and direction of the Engineer- in-Charge.	16500	cum	374.2	6174300
3(a)	Felling trees of the girth (measured at a height of 1 m above ground level), including cutting of trunks and branches, removing the roots and stacking of serviceable material and disposal of unserviceable material. **Beyond 30 cm girth upto and including 60 cm girth**	50	Each	219.2	10960
3(b)	Felling trees of the girth (measured at a height of 1 m above ground level), including cutting of trunks and branches, removing the roots and stacking of serviceable material and disposal of unserviceable material. **Beyond 60 cm girth upto and including 120 cm girth**	50	Each	972.7	48635
4(a)	Earthwork in excavation over areas (exceeding 30cm in depth 1.5m in width as well as 10sqm on plan) including dewatering as necessary of rain water/subsoil seepage water and disposal of excavated earth upto 100m and lift upto 3.6m, disposed earth to be levelled and neatly dressed. **All kinds of soil.**	2570	cum	125.95	323692
4(b)	Earthwork in excavation over areas (exceeding 30cm in depth 1.5m in width as well as 10sqm on plan) including dewatering as necessary of rain water/subsoil seepage water and disposal of excavated earth upto 100m and lift upto 3.6m, disposed earth to be levelled and neatly dressed.**Ordinary rock.**	3230	cum	221.05	713992
4(c)	Earthwork in excavation over areas (exceeding 30cm in depth 1.5m in width as well as 10sqm on plan) including dewatering as necessary of rain water/subsoil seepage water and disposal of excavated earth upto 100m and lift upto 3.6m, disposed earth to be levelled and neatly dressed. **Hard rock(requiring blasting)**	3230	cum	389.8	1259054
4(d)	Earthwork in excavation over areas (exceeding 30cm in depth 1.5m in width as well as 10sqm on plan) including dewatering as necessary of rain water/subsoil seepage water and disposal of excavated earth upto 100m and lift upto 3.6m, disposed earth to be levelled and neatly dressed. **Hard rock(blasting prohibited)**	200	cum	619.8	123960
5(a)	Earthwork in excavation in foundation, trenches or drains (not exceeding 1.5m in width as well as 10sqm on plan) including dewatering as necessary of rain water/subsoil seepage water and dressing of sides and ramming of bottoms, lift upto 3.6m, including getting out the excavated soil and disposal of surplus excavated soil as directed, within a lead of 100m**:All kinds of soil.**	4630	cum	166.4	770432

BILL OF QTY CUM PRICE SCHEDULE

Name of Project: 400/220 kV substation at PGCIL Neemuch site

Name of Work: Site levelling work & Construction of Tower & Equipments foundations,Cable trenche,Road ,Drain ,Fencing ,Fire Fighting Pump House & Water tank. (PKG-I)

S. No.	Description of Item	Quantity	Unit	Unit Rate (Rs)	Amount) (Rs)
5(b)	Earthwork in excavation in foundation, trenches or drains (not exceeding 1.5m in width as well as 10sqm on plan) including dewatering as necessary of rain water/subsoil seepage water and dressing of sides and ramming of bottoms, lift upto 3.6m, including getting out the excavated soil and disposal of surplus excavated soil as directed, within a lead of 100m:**Ordinary rock.**	2570	cum	275.85	708935
5(c)	Earthwork in excavation in foundation, trenches or drains (not exceeding 1.5m in width as well as 10sqm on plan) including dewatering as necessary of rain water/subsoil seepage water and dressing of sides and ramming of bottoms, lift upto 3.6m, including getting out the excavated soil and disposal of surplus excavated soil as directed, within a lead of 100m:**Hard rock(requiring blasting)**	2563	cum	460.19	1179467
5(d)	Earthwork in excavation in foundation, trenches or drains (not exceeding 1.5m in width as well as 10sqm on plan) including dewatering as necessary of rain water/subsoil seepage water and dressing of sides and ramming of bottoms, lift upto 3.6m, including getting out the excavated soil and disposal of surplus excavated soil as directed, within a lead of 100m:**Hard rock(blasting prohibited)**	500	cum	656.7	328350
6(a)	Extra for every additional lift of 1.5 m or part thereof in excavation /banking excavated or stacked materials:All kinds of soil.	100	cum	51.75	5175
6(b)	Extra for every additional lift of 1.5 m or part thereof in excavation /banking excavated or stacked materials:Ordinary or hard rock.	100	cum	92.8	9280
7.1	Excavating trenches of required width for pipes, cables, etc including excavation for sockets, and dressing of sides, ramming of bottoms, depth upto 3.0 m including getting out the excavated soil, and then returning the soil as required, in layers not exceeding 20cm in depth including consolidating each deposited layer by ramming,watering etc. (as per PGCIL technical specification) and disposing of surplus excavated soil as directed within a lead of 100m.**All kinds of soil:Pipes, cables etc, not exceeding 80mm dia.**	15	RM	138.05	2070.75
7.2	Excavating trenches of required width for pipes, cables, etc including excavation for sockets, and dressing of sides, ramming of bottoms, depth upto 3.0 m including getting out the excavated soil, and then returning the soil as required, in layers not exceeding 20cm in depth including consolidating each deposited layer by ramming,watering etc. (as per PGCIL technical specification) and disposing of surplus excavated soil as directed within a lead of 100m.**All kinds of soil:Pipes, cables etc. exceeding 80mm dia. but notexceeding 300 mm dia.**	15	RM	225.45	3381.75
7.3	Excavating trenches of required width for pipes, cables, etc including excavation for sockets, and dressing of sides, ramming of bottoms, depth upto 3.0 m including getting out the excavated soil, and then returning the soil as required, in layers not exceeding 20cm in depth including consolidating each deposited layer by ramming,watering etc. (as per PGCIL technical specification) and disposing of surplus excavated soil as directed within a lead of 100m.All kinds of soil**:Pipes, cables etc. exceeding 300mm dia butnot exceeding 600mm**	15	RM	352	5280
8	Filling available excavated earth (including rock) in trenches, plinth, sides of foundations, etc., in layers not exceeding 20cm in depth, consolidating each deposited layer by ramming and watering, lead upto 100m and lift upto 3.6m.	11020	cum	125.75	1385765
9	Supplying and filling in plinth with Jamuna/local sand under floors including watering, ramming, consolidating and dressing etc all complete	10	cum	810.82	8108.2
10	Supplying, filling and compacting CNS materials as per IS: 9451 at the site under floors, foundations, roads, cable trenches, drains, etc. including royalty, carriage etc. all complete, for all leads and lift with all labour, material, tools, tackles, equipments, safeguards & incidentals as necessary as per specification and direction - of - Engineer -in- charge.	50	cum	332.55	16627.5

BILL OF QTY CUM PRICE SCHEDULE

Name of Project: 400/220 kV substation at PGCIL Neemuch site

Name of Work: Site levelling work & Construction of Tower & Equipments foundations,Cable trenche,Road ,Drain ,Fencing ,Fire Fighting Pump House & Water tank. (PKG-I)

S. No.	Description of Item	Quantity	Unit	Unit Rate (Rs)	Amount) (Rs)
11	Supplying, filling and compacting stone boulders, hard core of stone ballast etc mixed with sand at the site under floors, foundations, roads, cable trenches, drains, etc. in layers not exceeding 200mm thickness including royalty, carriage etc. all complete, for all leads and lift with all labour, material, tools, tackles, equipments, safeguards & incidentals as necessary as per specification and direction - of - Engineer -in- charge.	200	cum	1292	258400
12(a)	Carriage & disposal of surplus excavated earth/rock beyond initial lead by mechanical means not necessarily all the times on pucca roads, including loading, unloading, dressing of excavated material, etc., complete as per specifications **:Lead upto 1 km.**	6330	cum	98.34	622492
12(b)	Carriage & disposal of surplus excavated earth/rock beyond initial lead by mechanical means not necessarily all the times on pucca roads, including loading, unloading, dressing of excavated material, etc., complete as per specifications :**Lead from 1Km to 2 km.**	2110	cum	111.5	235265
13(a)	Supplying chemical emulsion in sealed containers including delivery as specified:**Chloropyriphos emulsifiable concentrate of 20%**	40	litre	157.45	6298
14	Diluting & injecting chemical emulsion for PRE-CONSTRUCTIONAL ANTI-TERMITE treatment and creating a continuous chemical barrier under and all around the column pits, wall trenches, basement excavation, top surface of plinth filling, junction of wall & floor, along the external perimeter of building, expansion joints, over the top surface of consolidated earth on which apron is to be laid, surroundings of pipes and conduits, etc complete as per specifications (Plinth area of the building at ground floor only shall be measured for payment).	100	Sqm	131.9	13190
15	Providing and laying damp proof course 50mm thick cement concrete 1:1.5:3 (1 Cement:1.5 coarse sand : 3 graded stone aggregate 12.5 mm nominal size) .	10	Sqm	293.35	2933.5
16	Applying a coat of residual petroleum bitumen of penetration 80/100 of approved quality using 1.7 kg per sqm on damp proof course after cleaning the surface with brushes and finally with a piece of cloth lightly soaked in kerosene oil.	10	Sqm	88.05	880.5
17	Extra for providing and mixing water proofing material in Cement Concrete work in doses by weight of cement as per manufacturer's specification:	3580	1 kg per 50 kg of cement	41.73	149393.4
18(a)	Providing and laying in position cement concrete of specified grade excluding the cost of centering and shuttering:**1:4:8 (1 cement : 4 fine sand : 8 graded stone aggregate 40 mm nominal size)**	680	cum	4148.54	2821007
18(b)	Providing and laying in position cement concrete of specified grade excluding the cost of centering and shuttering:**1:3:6 (1 cement : 3 fine sand : 6 graded stone aggregate 40 mm nominal size)**	10	cum	4415.45	44154.5
18(c)	Providing and laying in position cement concrete of specified grade excluding the cost of centering and shuttering:**1:2:4 (1 cement : 2 coarse sand : 4 graded stone aggregate 20 mm nominal size)**	20	cum	4943.8	98876
19(a)	Providing and laying in position specified grade of reinforced cement concrete excluding the cost of centering, shuttering, finishing and reinforcement - **All work up to plinth level :1:1.5:3 (1 cement : 1.5 coarse sand : 3 graded stone aggregate 20 mm nominal size)**	10	cum	5570.21	55702.1
20	Providing & fixing in position M25 precast cement concrete trench covers or perforated covers wherever necessary at various elevations in all kinds of work including moulding, formwork, mixing, laying out, compacting and curing, storing, transportation, erection without damage, setting in position with cement and sand mortar, grouting etc all as per specs, drawings and directions of Engr-in-Charge but excluding the cost of reinforcement, inserts, edge angles, etc. (Note:- Cement content considered in M-25 is @330 kg/cum, Excess/less cement used as per design mix is payable/recoverable separately)	80	cum	5176.44	414115

BILL OF QTY CUM PRICE SCHEDULE

Name of Project: 400/220 kV substation at PGCIL Neemuch site

Name of Work: Site levelling work & Construction of Tower & Equipments foundations,Cable trenche,Road ,Drain ,Fencing ,Fire Fighting Pump House & Water tank. (PKG-I)

S. No.	Description of Item	Quantity	Unit	Unit Rate (Rs)	Amount) (Rs)
21	Grouting of block outs, pockets, foundations, bolts holes and underside of base plates with cement, sand aggregate (of size 6 mm and down) grout 1:1:2 with non-shrink additive/grouting compound and shall be of strength not less than M30 including placing, curing, cleaning, surface preparation, testing, etc. complete with labour, materials, equipment, handling, testing, etc. all complete as per specifications, drawings and instructions of the Engineer.	30	cum	11197.67	335930
22(i)	Providing and laying in position machine batched, machine mixed and machine vibrated design mix cement concrete of specified grade for RCC work including pumping of cocrete to site of laying but excluding the cost of centering, shuttering, finishing and reinforcement including admixtures in recommended proportions (as per IS 9103) to accelerate, retrard setting of concrete, improve workability without impairing strength and durability. - M25 grade. (Note:- Cement content considered in M-25 is @330 kg/cum, Excess/less cement used as per design mix is payable/recoverable separately):**All works up to plinth level**	3690	cum	5887.43	21724617
22(ii)	Providing and laying in position machine batched, machine mixed and machine vibrated design mix cement concrete of specified grade for RCC work including pumping of cocrete to site of laying but excluding the cost of centering, shuttering, finishing and reinforcement including admixtures in recommended proportions (as per IS 9103) to accelerate, retrard setting of concrete, improve workability without impairing strength and durability. - M25 grade. (Note:- Cement content considered in M-25 is @330 kg/cum, Excess/less cement used as per design mix is payable/recoverable separately):**All works above plinth level to floor V level**	170	cum	6691	1137470
23	Add for using extra cement in the items of design mix over and above the specified cement content therein.	2700	Quintal	533.82	1441314
24(a)	Centering and shuttering including strutting, propping etc. and removal of form for all height : **Foundations, footings, bases of columns, etc. for mass concrete:**	2460	Sqm	184.42	453673
24(b)	Centering and shuttering including strutting, propping etc. and removal of form for all height :**Walls (any thickness) including attached pilasters, butteresses, plinth and string courses etc.**	7966	Sqm	369.24	2941514
24(c)	Centering and shuttering including strutting, propping etc. and removal of form for all height **:Suspended floors, roofs, landings, balconies and access platform.**	148	Sqm	413.62	61215.76
24(d)	Centering and shuttering including strutting, propping etc. and removal of form for all height :**Lintels, beams, plinth beams, girders, bressumers,chajjas and cantilevers.**	135	Sqm	333.23	44986.05
24(e)	Centering and shuttering including strutting, propping etc. and removal of form for all height :**Columns, Pillars, Piers, Abutments, Posts and Struts.**	4544	Sqm	454.41	2065025
25(a)	Reinforcement steel (TMT/ HYSD) of grade Fe-500D conforming to IS :1786 of approved make of PGCIL for R.C.C. work including supplying, straightening, cutting, bending, placing in position and binding including chair and laps etc all complete as per specification at all level and height :**Including supply and straightening, cutting,bending, binding, (i/c cost of binding wire), placing in position, etc., all labour & material, complete.**	58200	Kg	79.12	4604784
25(b)	Reinforcement steel (TMT/ HYSD) of grade Fe-500D conforming to IS :1786 of approved make of PGCIL for R.C.C. work including supplying, straightening, cutting, bending, placing in position and binding including chair and laps etc all complete as per specification at all level and height **:Excluding supply and straightening, cutting,bending, binding, (i/c cost of binding wire), placing in position, etc., all labour & material, complete.**	232770	Kg	11	2560470
26	Structural steel work welded in built up sections like edge protection angles, pipes, insert plates with lugs & framed work including providing, cutting, hoisting, fixing in position/ embedding in concrete and applying a priming coat of approved steel primer all complete.	61760	Kg	79	4879040

BILL OF QTY CUM PRICE SCHEDULE

Name of Project: 400/220 kV substation at PGCIL Neemuch site

Name of Work: Site levelling work & Construction of Tower & Equipments foundations,Cable trenche,Road ,Drain ,Fencing ,Fire Fighting Pump House & Water tank. (PKG-I)

S. No.	Description of Item	Quantity	Unit	Unit Rate (Rs)	Amount) (Rs)
27	Structural steel work riveted, bolted or welded in built up sections, trusses and framed work, including providing, cutting, hoisting, fixing in position and applying a priming coat of approved steel primer all complete.	4500	Kg	92	414000
28(a)	Steelwork welded in built up sections/framed work including providing, cutting, hoisting, fixing in position and applying a priming coat of approved steel primer using structural steel etc., as required:**In covering of floors/trenches of Pump house building with chequered plates, stringers, treads, landings, etc., of staircases involving use of chequered plates, wherever required, all complete.**	1000	Kg	86.22	86220
29	Galvanised steel work for rung ladder, Handrail, edge protection angles, pipes, insert plates with lugs & framed work including providing, cutting, hoisting, fixing in position/ embedding in concrete and applying a priming coat of approved primer all complete. (Mass of Zinc Coating= 750 gm/ sqm)	150	Kg	86.9	13035
30	Brick work with common burnt clay F.P.S. bricks as per Technical Specification of class designation 7.5 in foundation and plinth including weep holes: **Cement mortar 1:6 (1 cement : 6 coarse sand)**	240	cum	4524.1	1085784
31	Brick work with clay flyash F.P.S. bricks as per Technical Specification of class designation 7.5 in foundation and plinth including weep holes: **Cement mortar 1:6 (1 cement : 6 coarse sand)**	10	cum	3981	39810
32	Brick work with common burnt clay F.P.S.bricks as per Technical Specification of class designation 7.5 in superstructure above plinth level up to floor V level in all shapes and sizes including weep holes : **Cement mortar 1:6 (1 cement : 6 coarse sand)**	50	cum	5355.29	267764.5
33	Brick work with clay flyash F.P.S.bricks as per Technical Specification of class designation 7.5 in superstructure above plinth level up to floor V level in all shapes and sizes including weep holes : **Cement mortar 1:6 (1 cement : 6 coarse sand)**	10	cum	4812.28	48122.8
34	Half brick masonry with common burnt clay F.P.S. bricks as per Technical specification of class designation 7.5 in foundations and plinth in:**cement mortar 1:4 (1 cement : 4 coarse sand)**	10	Sqm	562.7	5627
35	Half brick masonry with common burnt clay F.P.S.bricks as per Technical specification of class designation 7.5 in superstructure above plinth level up to floor V level:**Cement mortar 1:4 (1 cement :4 coarse sand)**	10	Sqm	653.36	6533.6
36	Extra for providing and placing in position 2 Nos. 6mm dia. M.S. bars at every third course of half brick masonry.	10	Sqm	48.21	482.1
37	6mm cement plaster to ceiling of mix:**1:3 (1 cement : 3 fine sand)**	140	Sqm	138.39	19374.6
38	12mm cement plaster on the wall/ concrete surface in the mix:**1:6 (1 cement: 6 fine sand)**	210	Sqm	154.72	32491.2
39	12mm cement plaster finished with a floating coat of neat cement in the mix:**1:4 (1cement :4 fine sand)**	2420	Sqm	203.19	491720
40	18mm cement plaster on roof in two coats with under layer 12mm thick cement plaster 1:5 (1 cement :5 coarse sand) finished with a top layer of 6mm thick 1:6 cement plaster(1cement : 6 fine sand)	210	Sqm	245.49	51552.9
41	Extra for providing and mixing water proofing material in cement plaster work in proportion recommended by the manufacturer	100	Per bag of 50 KG cement	44.12	4412
42	Add for plaster drip course/ groove in plastered surface or moulding to R.C.C. projections.	90	RM	34.15	3073.5
43	Making plinth protection of 50mm thick cement concrete 1:2:4 (1 cement : 2 coarse sand : 4 graded stone aggregate 20mm nominal size) laid over 75mm thick bed of dry brick balast 40mm nominal size well rammed and consolidated and grouted with fine sand including finishing the top smooth.	60	Sqm	426.82	25609.2
44	Providing an fixing chiken wire mesh on wall, floor & ceiling surface all complete as per drawing/specification and direction of Engineer-in charge.	100	Sqm	48.3	4830

BILL OF QTY CUM PRICE SCHEDULE

Name of Project: 400/220 kV substation at PGCIL Neemuch site

Name of Work: Site levelling work & Construction of Tower & Equipments foundations,Cable trenche,Road ,Drain ,Fencing ,Fire Fighting Pump House & Water tank. (PKG-I)

S. No.	Description of Item	Quantity	Unit	Unit Rate (Rs)	Amount) (Rs)
45	Forming groove of uniform size from 12X12mm and upto 25X15mm in plastered surface and joints of ceiling and wall as per approved pattern using wooden battens, nailed to the underlayer including removal of wooden battens, repairs to the edges of plaster panel and finishing the groove complete as per specifications and directions of the Engineer-in-charge.	90	RM	63.35	5701.5
46	52 mm thick CC flooring with "Hardcrete" concrete hardner topping under layer 40 mm thick CC 1:2:4 (1 cement: 2 coarse sand: 4 graded stone aggregate 20mm nominal size) and top layer 12 mm thick Hardcrete cement hardner consisting of mix 1:2 (1 cement hardner mix: 2 stone aggregate 6mm nominal size) by volume with which Hardcrete hardening compound of approved quality is mixed @ 2 liter Hardcrete hardener per 50 Kg of cement including cement slurry or as per manufacturer's specifications. This includeds the cost of cement slurry, but excluding the cost of nosing of steps etc., complete.	95	Sqm	516.84	49099.8
47	Providing and fixing glass strips in joints of terrazo/ cement concrete floors:**40 mm wide and 4 mm thick**	80	RM	48.59	3887.2
48	Cement plaster skirting (up to 15 cm height) with cement mortar 1:3 (1 cement : 3 coarse sand) finished with metallic concrete hardner in a same ratio as floor finished with a floating coat of neat cement.**:21 mm thick**	10	Sqm	328.96	3289.6
49	Providing and applying white cement based putty of average thickness 1mm, of approved brand and manufacturer, over the plastered wall surface to prepare the surface even and smooth as directed by engineer-in-charge for all level and height.	10	Sqm	87.35	873.5
50	Providing and applying plaster of paris putty of 2 mm thickness over plastered surface to prepare the surface even and smooth complete at all level and height	125	Sqm	117.08	14635
51(a)	Applying priming coat:With ready mixed red oxide zinc chromate primer of approved brand and manufacture on steel galvanised iron/ steel works.	100	Sqm	15.19	1519
51(b)	Applying priming coat:Applying one coat of water thinnable cement primer of approved brand and manufacture on RCC/ BRICK wall surface at all level and height:	100	Sqm	36.27	3627
52	Finishing RCC/ BRICK walls with water proofing cement paint of gray color/ approved color by customer at all levels and heights: **New work (Two or more coats applied @ 3.84 kg/10 sqm).**	650	Sqm	56.21	36536.5
53(a)	Painting with synthetic enamel paint of approved brand and manufacture of required colour to give an even shade:**Two or more coats on new work of approved brand and manufacture**	30	Sqm	74.91	2247.3
54(a)	Wall/ Ceiling painting with premium acrylic emulsion paint of interior grade, having VOC (Volatile Organic Compound) content less than 50 grams/ litre. of approved brand and manufacture, including applying additional coats wherever required to achieve even shade and colour at all level and height:**Two or more coats on new work**	230	Sqm	68.74	15810.2
55	White washing with lime to give an even shade: **Three or more coats on new**	140	Sqm	16.97	2375.8
56(a)	Finishing walls/ Slab with Premium Acrylic Smooth exterior paint with Silicone additives of required shade at all level and height:**New work : (Two or more coat applied @ 1.43 ltr/10 sqm over and including primer coat of exterior primer applied @ 2.20 kg/10 sqm).**	210	Sqm	91.61	19238.1
57(a)	Providing and fixing aluminium work for doors, windows, ventilators and partitions with extruded builtup standard tubular and other sections of approved make conforming to IS: 733 and IS:1285, fixed with rawl plugs and screws or with fixing clips or with expansion hold fasteners including necessary filling up of gaps at junctions at top , bottom and sides with required PVC/neoprene felt, etc. Aluminium sections shall be smooth , rust free, straight, mitred and jointed mechanically wherever required including cleat angle, aluminium snap beading for glazing/panelling, CP brass/stainless steel screws, all complete as per architectural drawings and direction of Engineer-in-charge. (Glazing and panelling to be paid for separately)**:For Fixed Portion,Powder coated aluminium (minimum thickness of podwer caoting 50 micron)**	200	Kg	334.55	66910

BILL OF QTY CUM PRICE SCHEDULE

Name of Project: 400/220 kV substation at PGCIL Neemuch site

Name of Work: Site levelling work & Construction of Tower & Equipments foundations,Cable trenche,Road ,Drain ,Fencing ,Fire Fighting Pump House & Water tank. (PKG-I)

S. No.	Description of Item	Quantity	Unit	Unit Rate (Rs)	Amount) (Rs)
57(b)	Providing and fixing aluminium work for doors, windows, ventilators and partitions with extruded builtup standard tubular and other sections of approved make conforming to IS: 733 and IS:1285, fixed with rawl plugs and screws or with fixing clips or with expansion hold fasteners including necessary filling up of gaps at junctions at top , bottom and sides with required PVC/neoprene felt, etc. Aluminium sections shall be smooth , rust free, straight, mitred and jointed mechanically wherever required including cleat angle, aluminium snap beading for glazing/panelling, CP brass/stainless steel screws, all complete as per architectural drawings and direction of Engineer-in-charge. (Glazing and panelling to be paid for separately)**:For shutters of doors, windows & ventilators including providing and fixing hinges/pivots and fittings wherever required including the cost of PVC/neoprene gasket required ,**Powder coated aluminium (minimum thickness of podwer caoting 50 micron)	500	Kg	391.32	195660
58(a)	Providing and fixing glazing in door, window, ventilator shutters and partitions, etc., with PVC/neoprene gasket, etc., complete as per the architectural drawings and directions of Engineer-in-charge:**With float glass panes of 5.5mm (minimum) thickness (weight not less than 13.75kg/sqm)**	10	Sqm	886.51	8865.1
59	Providing and fixing Aluminum grills of required pattern in frames of windows etc. with Aluminium flats, square or round bars etc. all complete. (Only weight of grills to be measured for payment).	90	kg	355.37	31983.3
60(a)	Providing and fixing double action hydraulic floor spring of approved brand and manufacture conforming to IS : 6315, having brand logo embossed on the body / plate with double spring mechanism and door weight upto 125 kg, for doors, including cost of cutting floors, embedding in floors as required and making good the same matching to the existing floor finishing and cover plates with brass pivot and single piece M.S. sheet outer box with slide plate etc. complete as per the direction of Engineer-in-charge:**With stainless steel cover plate minimum 1.25 mm thickness**	1	Each	1777.08	1777.08
61	Providing and fixing IS:3564 marked aluminium die cast body tubular type universal hydraulic door closer of approved quality and make with accessories and screws complete.	1	Each	358.96	358.96
62	Providing and fixing chromium plated brass 100 mm mortice latch and lock with 6 levers and a pair of lever handles with necessary screws etc. complete(best make of approved quality).	1	Each	590.2	590.2
63(a)	Providing and fixing aluminium sliding door bolts anodised (anodic coating not less than grade AC 10 as per IS: 1868) transparent or dyed to required colour or shade with nuts and screws etc. complete:**300 X 16 mm**	1	Each	184.35	184.35
64(a)	Providing and fixing aluminium handles anodised (anodic coating not less than grade AC 10 as per IS: 1868) transparent or dyed to required colour or shade with necessary screws etc., complete:**125mm**	1	Each	43.86	43.86
65	Providing and fixing aluminium hanging floor door stopper ISI marked anodised (anodic coating not less than grade AC 10 as per IS : 1868)transparent or dyed to required colour and shade with necessary screws etc. complete.	1	Each	23.68	23.68
66	Supplying and fixing of seamless galvalume motorised rolling shutters of approved make as per customer specfication clause no 13.22.	10	Sqm	2019.89	20198.9
67	Providing and fixing 2 mm thick M.S. sheet door with frame of 45x45x5 mm angle iron and 3 mm M.S. gussets plates at the junction and corners, all necessary fittings complete, including applying a priming coat of approved steel primer**:Using M.S. Angle 45x45x5 mm for diagonal braces**	5	Sqm	2662.05	13310.25

BILL OF QTY CUM PRICE SCHEDULE

Name of Project: 400/220 kV substation at PGCIL Neemuch site

Name of Work: Site levelling work & Construction of Tower & Equipments foundations,Cable trenche,Road ,Drain ,Fencing ,Fire Fighting Pump House & Water tank. (PKG-I)

S. No.	Description of Item	Quantity	Unit	Unit Rate (Rs)	Amount) (Rs)
68	Providing and fixing factory made ISI marked steel glazed doors, windows and ventilators, side/top/centre hung, with beading and all members such as F7D, F4B, K11B and K12B etc. complete of standard rolled steel sections, joints mitred and flash butt welded and sash bars tenoned and riveted, including providing and fixing of hinges, pivots, including priming coat of approved steel primer, but excluding the cost of other fittings, complete all as per approved design, (sectional weight of only steel members shall be measured for payment):**Fixing with 15x3 mm lugs 10 cm long embedded in cement concrete block block 15x10x10 cm of C.C.**	150	kg	104.76	15714
69	Providing and fixing precoated galvanised iron profile sheets (size, shape and pitch of corrugation as approved by Engineer-in-charge) 0.50 mm (+ 0.05 %), total coated thickness with zinc coating 120 gm per sqm as per IS:277 in 240 mpa steel grade, 5-7 microns epoxy primer on both side of the sheet and polyester top coat 15-18 microns. Sheet should have protective guard film of 25 microns minimum to avoid scratches during transportation and should be supplied in single length upto 12metre or as desired by Engineer-in-charge. The sheet shall be fixed using self drilling /self tapping screws of size (5.5x 55mm) with EPDM seal, complete upto any pitch in horizontal/ vertical or curved surfaces excluding the cost of purlins, rafters and trusses and including cutting to size and shape wherever required.	200	Sqm	473.40	94680
70(a)	Providing and fixing on wall face unplasticised - Rigid PVC rain water pipes conforming to IS : 13592 Type A including jointing with seal ring conforming to IS : 5382 leaving 10 mm gap for thermal expansion, (i) Single socketed pipes including all fittings like bends, bat clamps gratings etc.:**110 mm diameter**	60	RM	211.92	12715.2
71(a)	Providing and fixing on wall face unplasticised - PVC moulded fittings/ accessories for unplasticised - Rigid PVC rain water pipes conforming to IS : 13592 Type A including jointing with seal ring conforming to IS : 5382 leaving 10 mm gap for thermal expansion Single socketed pipes:**110 mm bend 87.5 degree**	5	Each	99.94	499.7
71(b)	Providing and fixing on wall face unplasticised - PVC moulded fittings/ accessories for unplasticised - Rigid PVC rain water pipes conforming to IS : 13592 Type A including jointing with seal ring conforming to IS : 5382 leaving 10 mm gap for thermal expansion Single socketed pipes:**110 shoe plain**	5	Each	87.15	435.75
72(a)	Providing and fixing on wall face unplasticised - PVC clips of approved design to unplasticised - Rigid PVC rain water pipes by means of 50x50x50 mm hard wood plugs, screwed with MS screws of required length including cutting brick work and fixing in cement mortar 1:4 (1 cement: 4 coarse sand) and making good the wall etc complete:**110 mm**	5	Each	175.15	875.75
73	Making khurras 45X45cm with average minimum thickness of 5cm cement concrete 1:2:4 (1 cement: 2 coarse sand: 4 graded stone aggregate of 20mm nominal size) over PVC sheet 1mX1mX400micron, finished with 12mm cement plaster 1:3 (1 cement: 3 coarse sand) and a coat of neat cement rounding the edges and making and finishing the outlet complete.	5	Each	178.17	890.85

BILL OF QTY CUM PRICE SCHEDULE

Name of Project: 400/220 kV substation at PGCIL Neemuch site

Name of Work: Site levelling work & Construction of Tower & Equipments foundations,Cable trenche,Road ,Drain ,Fencing ,Fire Fighting Pump House & Water tank. (PKG-I)

S. No.	Description of Item	Quantity	Unit	Unit Rate (Rs)	Amount) (Rs)
74(a)	Providing and laying integral cement based water proofing treatment including preparation of surface as required for treatment of roofs, balconies, terraces etc consisting of following operations: a) Applying a slurry coat of neat cement using 2.75 kg/sqm. of cement admixed with water proofing compound conforming to IS. 2645 and approved by Engineer-in-charge over the RCC slab including adjoining walls upto300mm height including cleaning the surface before treatment. b)Laying brick bats with mortar using broken bricks/brick bats 25 mm to115mm size with 50% of cement mortar 1:5 (1 cement : 5 coarse sand)admixed with water proofing compound conforming to IS : 2645 and approved by Engineer-in-charge over 20 mm thick layer of cement mortar of mix 1:5 (1 cement :5 coarse sand) admixed with waterproofing compound conforming to IS : 2645 and approved by Engineer-in-charge to required slope and treating similarly the adjoining walls upto 300 mm height including rounding of junctions of walls and slabs c)After two days of proper curing applying a second coat of cement slurry using 2.75kg/ sqm of cement admixed with water proofing compound conforming to IS : 2645 and approved by Engineer-in-charge. d)Finishing the surface with 20 mm thick jointless cement mortar of mix1:4 (1 cement :4 coarse sand) admixed with water proofing compound conforming to IS : 2645 and approved by Engineer-in-charge including laying glass fibre cloth of approved quality in top layer of plaster and finally finishing the surface with trowel with neat cement slurry and making pattern of 300x300 mm square 3mm deep. e) The whole terrace so finished shall be flooded with water for a minimum period of two weeks for curing and for final test. All above operations to be done in order and as directed and specified by the Engineer-in-Charge : With average thickness of 120mm and minimum thickness at khurra as 65 mm.	80	Sqm	954.2	76336
75	Preparation and consolidation of sub grade with power road roller of 8 to 12 tonne capacity after excavating earth to an average of 22.5 cm depth,dressing to camber and consolidating with road roller including making good the undulations etc and re-rolling the sub grade and disposal of surplus earth lead upto 50 metres.	13370	sqm	90.1	1204637
76	Extra for compaction of earthwork in embankment under optimum moisture conditions to give at least 95% of the maximum dry density (Proctor density)	13370	cum	10.7	143059
77(a)	Suppling and stacking at site :90 mm to 45 mm size stone aggregate	1030	cum	1278.69	1317051
77(b)	Suppling and stacking at site :63 mm to 45 mm size stone aggregate	1030	cum	1386.53	1428126
77(c)	Suppling and stacking at site :53 mm to 22.5 mm size stone aggregate	1030	cum	1475.02	1519271
77(d)	Suppling and stacking at site :Stone screening 13.2 mm nominal size (type A)	420	cum	1439.66	604657
77(e)	Suppling and stacking at site :Stone screening 11.2 mm nominal size (type B)	210	cum	1398.19	293620
77(f)	Suppling and stacking at site :moorum	230	cum	563.01	129492.3
78(a)	Laying, spreading and compacting stone aggregates of specified sizes to WBM specifications in uniform thickness, hand picking, rolling with 3-wheeled road / vibratory roller 8-10 tonne capacity in stages to proper grade and camber, applying and brooming requisite type of screening/ binding materials to fill up interstices of coarse aggregate, watering and compacting to the required density etc., all complete. (Payment will be made for compacted layers only. Stone aggregates, screenings & moorum to be paid separately.):**Subbase with stone aggregate 90mm to 45mm including stone screening 13.2mm size and moorum/blinding material.**	760	cum	449.1	341316
78(b)	Laying, spreading and compacting stone aggregates of specified sizes to WBM specifications in uniform thickness, hand picking, rolling with 3-wheeled road / vibratory roller 8-10 tonne capacity in stages to proper grade and camber, applying and brooming requisite type of screening/ binding materials to fill up interstices of coarse aggregate, watering and compacting to the required density etc., all complete. (Payment will be made for compacted layers only. Stone aggregates, screenings & moorum to be paid separately.):**Base course with stone aggregate 63mm to 45mm including stone screening 13.2mm sizeand moorum/blinding material.**	760	cum	449.1	341316

BILL OF QTY CUM PRICE SCHEDULE

Name of Project: 400/220 kV substation at PGCIL Neemuch site

Name of Work: Site levelling work & Construction of Tower & Equipments foundations,Cable trenche,Road ,Drain ,Fencing ,Fire Fighting Pump House & Water tank. (PKG-I)

S. No.	Description of Item	Quantity	Unit	Unit Rate (Rs)	Amount) (Rs)
78(c)	Laying, spreading and compacting stone aggregates of specified sizes to WBM specifications in uniform thickness, hand picking, rolling with 3-wheeled road / vibratory roller 8-10 tonne capacity in stages to proper grade and camber, applying and brooming requisite type of screening/ binding materials to fill up interstices of coarse aggregate, watering and compacting to the required density etc., all complete. (Payment will be made for compacted layers only. Stone aggregates, screenings & moorum to be paid separately.):**Base course with stone aggregate 53mm to 22.4 mm including stone screening 11.2mm size and moorum/blinding material.**	760	cum	449.1	341316
79(a)	Providing and applying tack coat using hot straight run bitumen of grade VG - 10, including heating the bitumen, spraying the bitumen with mechanically operated spray unit fitted on bitumen boiler, cleaning and preparing the existing road surface as per specifications :**On W.B.M. @ 0.75 Kg I sqm**	10130	Sqm	36.4	368732
79(b)	2.5 cm premix carpet surfacing with 3 cum of stone chippings 10 mm nominal size per 100 sqm and bitumen emulsion (medium setting min. 65% bitumen contents) complying with IS : 8887, using 96 kg per cum of chippings of road surface, including consolidation with road roller etc complete	10130	Sqm	149.93	1518791
80(a)	Providing and placing in position suitable PVC water stops conforming to IS 12200 or equivalent for construction/expansion joints between two RCC members and fixed to the reinforcement with binding wire before pouring concrete etc. complete:**Serrated with central bulb (230mm wide, 5mm thick)**	400	RM	174	69600
80(b)	Providing and placing in position suitable PVC water stops conforming to IS 12200 or equivalent for construction/expansion joints between two RCC members and fixed to the reinforcement with binding wire before pouring concrete etc. complete:**Serrated with central bulb (230mm wide, 6mm thick)**	10	RM	201	2010
81(a)	Providing and fixing in position in culvert/road crossing/building wall PVC pipes conforming to IS : 12818 including jointing with seal all complete as per drawing and specification:**150mm diameter**	10	RM	212	2120
82	Supplying & fixing galvanised foundation bolts including nut & washer (Mass of Zinc Coating= 610 gm/ sqm) of all dia & length in position with help of proper templates (to be supplied by contractor) all complete as per drawings & directions of Engr-in-Charge. Weight of the template shall not be measured for payment purpose.	1700	Kg	118	200600
83	Fixing (all dia & length) foundation bolts in position with help of proper templates including nuts, washers and template (to be supplied by contractor) all complete as per drawings & directions of Engr-in-Charge. Weight of the template shall not be measured for payment purpose.	30600	Kg	16	489600
84	Providing and fixing fencing of GI barbed wire consisting of galvanized MS tubular posts at 3 m intervals; GIbarded wire shall run horizontally from post to post at a spacing of 300 mm (vertically) and a cross formation in each panel,complete as per technical specification and drawing (C/ENGG/CVL/SYD/FENCE/BW/01 REV-00) and directions of Engr-in-Charge. (The rate shall be inclusive of all the labour, materials (GI barbed wire ,/Galvanised MS tubular post/galvanised MS Flat etc), earthwork i.e excavation, backfilling, disposal, CC, PCC & shuttering and erection etc all complete)	950	RM	1395	1325250
85	Providing and fixing gate made of medium duty MS pipe including all allied activities, all complete as per customer's specification, drawing (C/ENGG/CVL/SYD/GATE/2016/01 OF 01 REV-0 & C/ENGG/MAIN GATE /01 REV-00)and direction Engineer in charge. (Rate shall be inclusive of all labour, material items like medium duty pipe, fabrication, welding,primer, painting, Al-drops,GI pipe,fitting and fixture etc.)	10000	KG	111	1110000
86(a)	Providing and laying non-pressure NP2 class (light duty) R.C.C. pipes with collars jointed with stiff mixture of cement mortar in the proportion of 1:2 (1 cement : 2 fine sand) including testing of joints etc. complete : **100 mm dia. R.C.C. pipe**	10	RM	286.53	2865.3

BILL OF QTY CUM PRICE SCHEDULE

Name of Project: 400/220 kV substation at PGCIL Neemuch site

Name of Work: Site levelling work & Construction of Tower & Equipments foundations,Cable trenche,Road ,Drain ,Fencing ,Fire Fighting Pump House & Water tank. (PKG-I)

S. No.	Description of Item	Quantity	Unit	Unit Rate (Rs)	Amount) (Rs)
86(b)	Providing and laying non-pressure NP2 class (light duty) R.C.C. pipes with collars jointed with stiff mixture of cement mortar in the proportion of 1:2 (1 cement : 2 fine sand) including testing of joints etc. complete : **250 mm dia. R.C.C. pipe**	40	RM	429.98	17199.2
86(c)	Providing and laying non-pressure NP2 class (light duty) R.C.C. pipes with collars jointed with stiff mixture of cement mortar in the proportion of 1:2 (1 cement : 2 fine sand) including testing of joints etc. complete : **300 mm dia. R.C.C. pipe**	40	RM	459.59	18383.6
87(a)	Providing and laying Non Pressure NP-3 R.C.C. hume pipe including collars/spigot jointed with stiff mixure of cement mortar of mix 1:2 (1 cement : 2 fine sand) including testing of joints etc all complete as per drawing and specification excluding the cost of concrete, shuttering, reinforcement, brickwork, plaster on brickwork and painting:**100mm dia**	100	RM	699.93	69993
87(b)	Providing and laying Non Pressure NP-3 R.C.C. hume pipe including	20	RM	1036.41	20728.2
87(c)	Providing and laying Non Pressure NP-3 R.C.C. hume pipe including collars/spigot jointed with stiff mixure of cement mortar of mix 1:2 (1 cement : 2 fine sand) including testing of joints etc all complete as per drawing and specification excluding the cost of concrete, shuttering, reinforcement, brickwork, plaster on brickwork and painting:**300mm dia**	20	RM	1114.88	22297.6
87(d)	Providing and laying Non Pressure NP-3 R.C.C. hume pipe including collars/spigot jointed with stiff mixure of cement mortar of mix 1:2 (1 cement : 2 fine sand) including testing of joints etc all complete as per drawing and specification excluding the cost of concrete, shuttering, reinforcement, brickwork, plaster on brickwork and painting:**450mm dia**	20	RM	1669	33380
88	Providing weep holes in RCC including cost of 75mm dia PVC pipes & fixing them in position etc complete as per standard specification	10	RM	135.7	1357
89	Providing 20mm thick expansion joint and filling the same with cement mortar of 1:4 cement sand mortar.	10	RM	36.15	361.47
90(a)	Demolishing cement concrete manually/ by mechanical means including disposal of material within 50 metres lead as per direction of Engineer - in - charge: **Nominal concrete 1:3:6 or richer mix (i/c equivalent design mix)**	10	Cum	997.05	9970.5
90(b)	Demolishing cement concrete manually/ by mechanical means including disposal of material within 50 metres lead as per direction of Engineer - in - charge: Nom**inal concrete 1:4:8 or leaner mix (i/c equivalent design mix)**	10	Cum	615.15	6151.5
91	Demolishing R.C.C. work manually/ by mechanical means including stacking of steel bars and disposal of unserviceable material within 50 metres lead as per direction of Engineer - in- charge.	10	Cum	1454.5	14545
92	Demolishing cement mortar brick work manually/ by mechanical means including stacking of serviceable material and disposal of unserviceable material within 50 metres lead as per direction of Engineer-in-charge.	10	Cum	842.75	8427.5
		Total amount in Rs			77771519

SECTION - 2

STANDARD TECHNICAL SPECIFICATION
(N.A.)

SECTION -3

ENCLOSURES TO THE SPECIFICATION

(a) Customer Specification

(b) Drawings

- C/ENGG/CVL/SYD/FENCE/BW/01
- C/ENGG/CVL/SYD/GATE/2016/01 OF 01
- C/ENGG/STD/DRAIN/2016 (SHEET 1 & 2)
- C/ENGG/STD/ROAD CULVERTS/2016 /01 OF 01
- C/ENGG/BITM/ROAD/01
- C/ENGG/STD/2016/RCT/01 OF 01 (SHEET 01 TO 04)

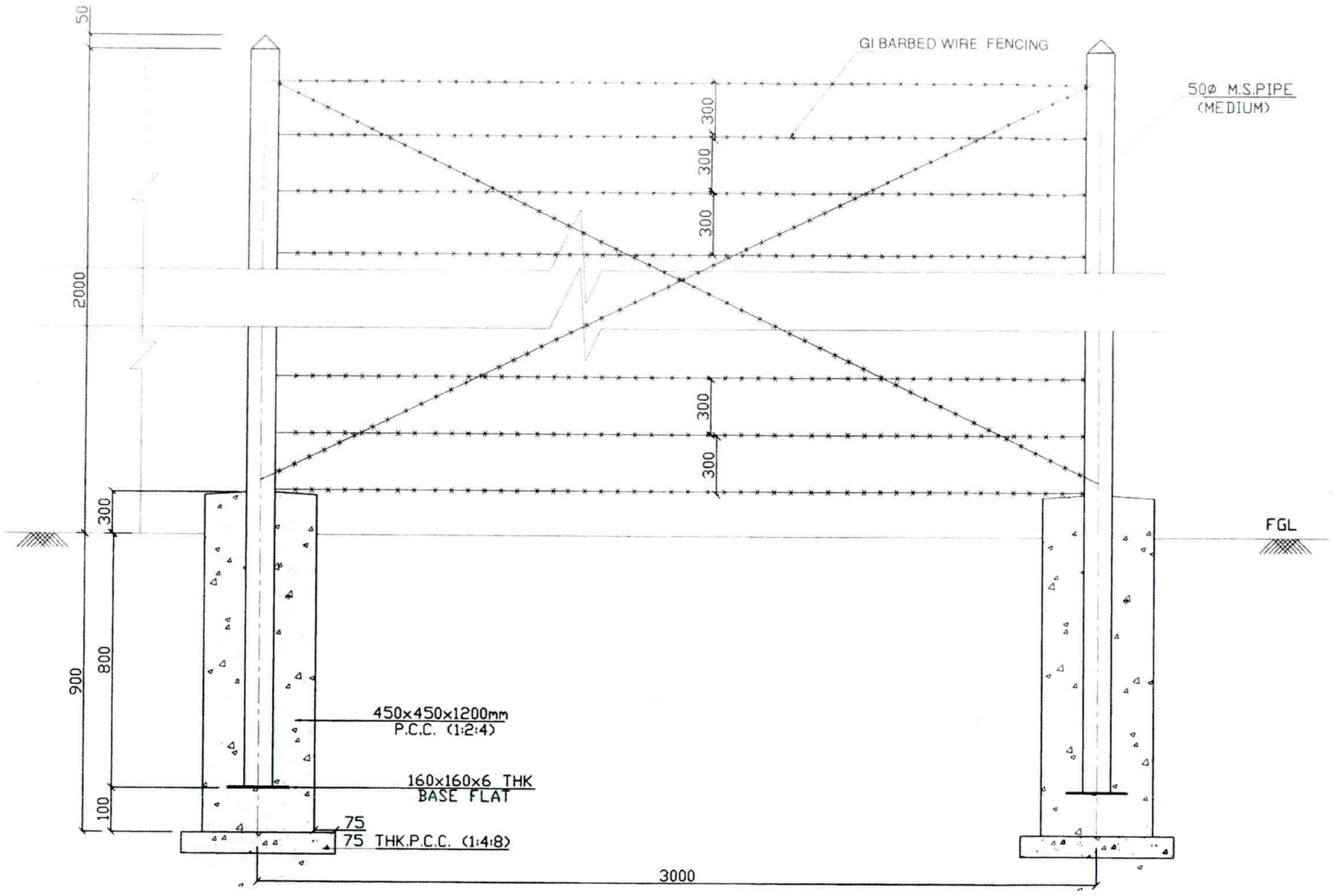

TYPICAL ELEVATION OF SWITCHYARD FENCING

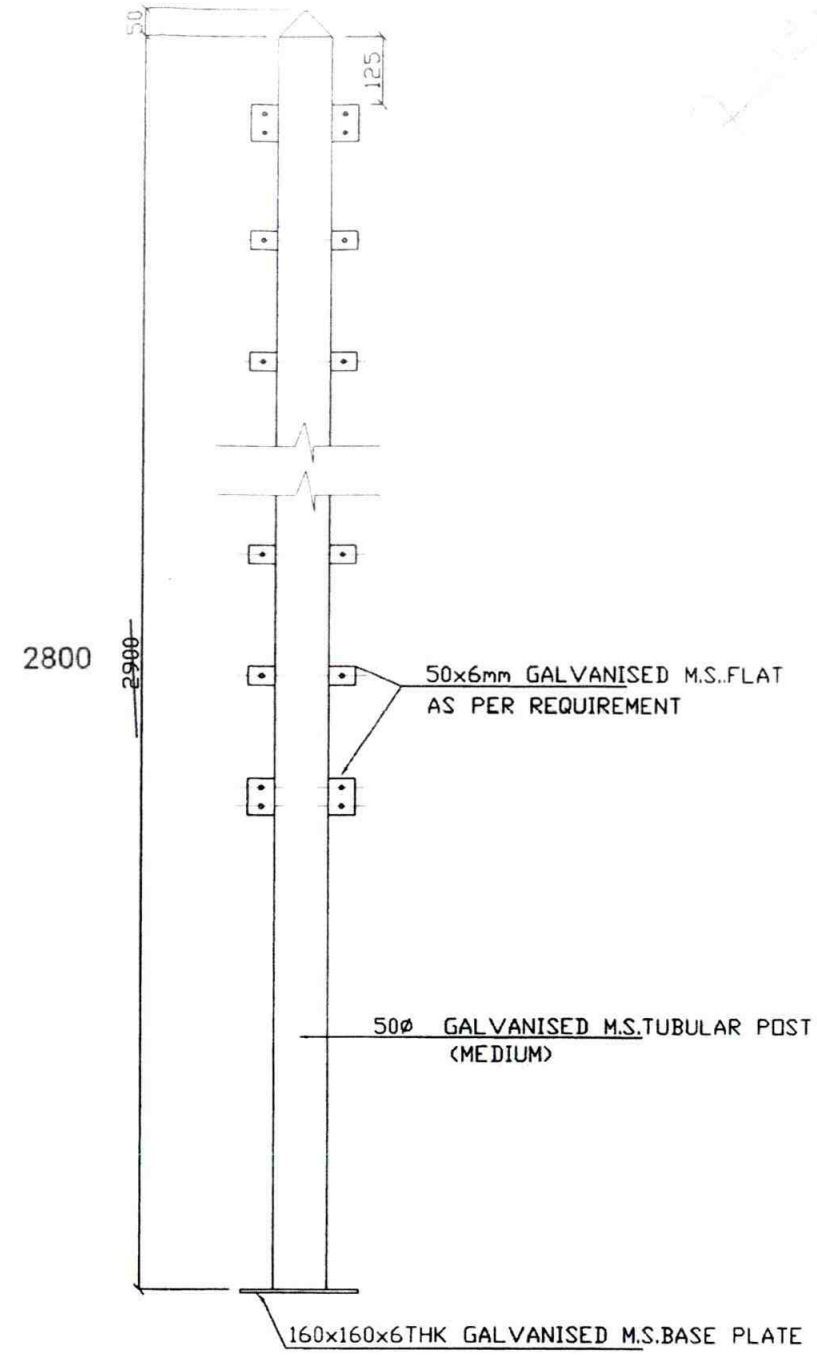

DETAIL OF TUBULAR POST

NOTES:

1. ±0.00 SHALL DENOTE SWITCHYARD FINISHED GROUND LEVEL
2. GI BARBED WIRE SHALL BE AS PER IS 278, WEIGHING 9.38 KG PER 100 M (MIN)
3. TUBULAR POST SHALL BE PLACED @ 3.0m CENTRE TO CENTRE.
4. CORNER TUBULAR POST SHALL BE PROVIDED CLEATS IN FOUR SIDES SUITING TO REQUIREMENT.
5. TUBES/PIPES OF POST SHALL BE GALVANIZED
6. CONCRETE FOR P.C.C. SHALL CONFORM TO CPWD SPECIFICATION.
7. CONCRETE PEDESTAL SHALL BE CAST IN VIRGIN SOIL/WELL COMPACTED EARTH.
8. FENCING WORKS SHALL BE AS PER CPWD SPECIFICATION.
9. EVERY 15TH , LAST BUT ONE END POST AND CORNER POSTS SHALL BE STRUTTED ON BOTH SIDES AND END POSTS ON ONE SIDE ONLY.

RELEASED FOR CONSTRUCTION.

POWER GRID CORPORATION OF INDIA LIMITED
(A Government of India Enterprise)

PROJECT : 765/400 & 400/220 KV SUBSTATION

TITLE : STANDARD DETAILS FOR SWITCH YARD BARBED WIRE FENCING

PREPD	REVD	REVD.	REVD.	APPD.	DATE	SCALE	DRAWING NO	REV
					25/02/2020	NTS	ENGG/CVL/SYD/FENCE/BW/01	0

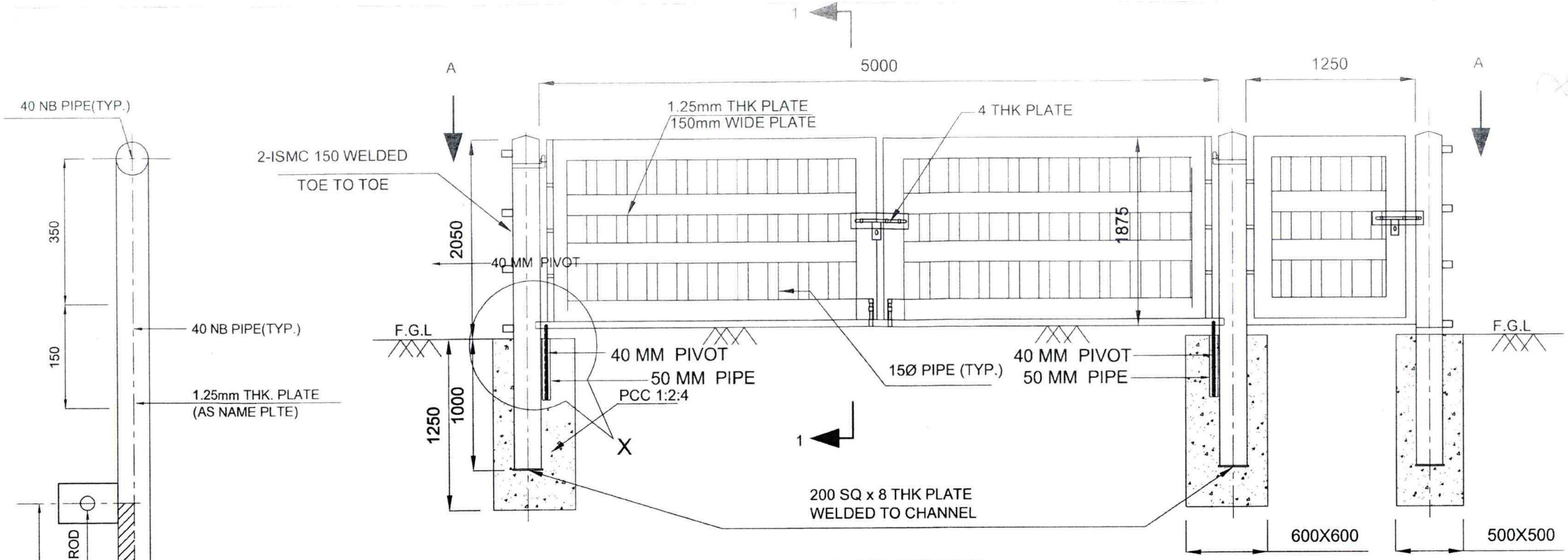

SWITCHYARD FENCING GATE DETAIL

SECTION 1-1

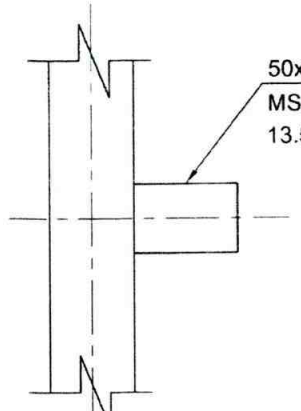

DETAIL -B

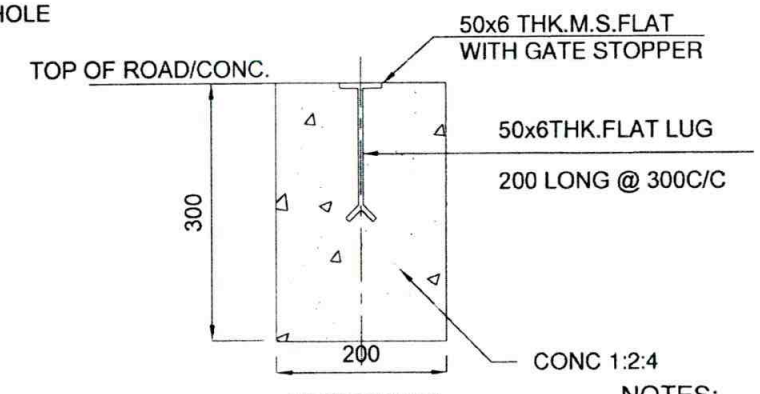

SECTION 2:2

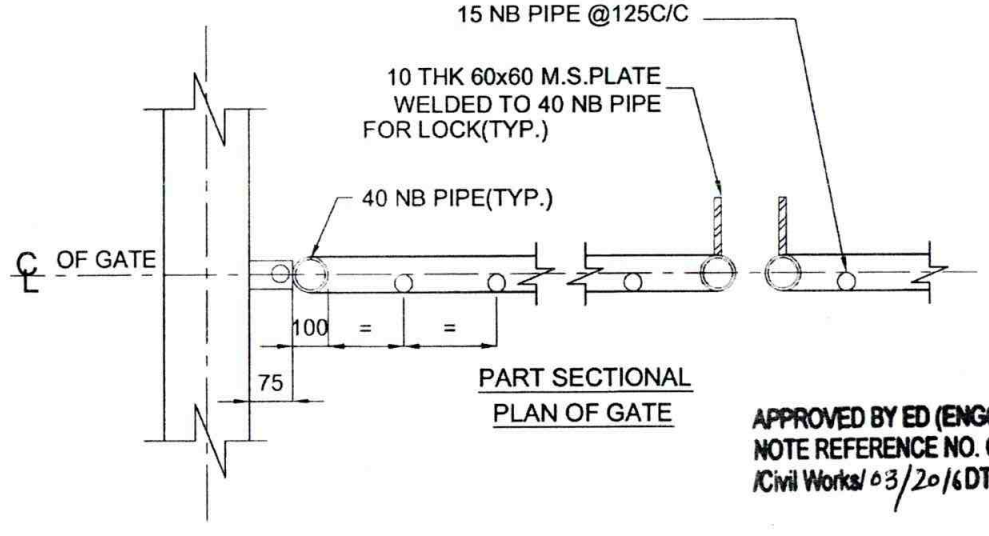

PART SECTIONAL
PLAN OF GATE

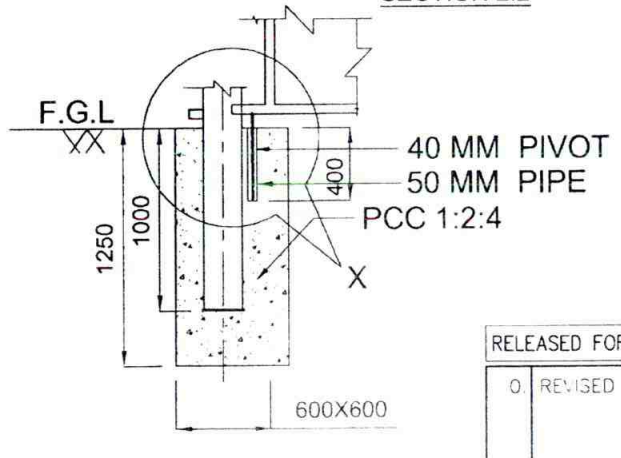

DETAIL X-X

APPROVED BY ED (ENGG.TL-SS-CIVIL) VIDE NOTE REFERENCE NO. C/ENGG/STD.DRG. /Civil Works/03/2016DTD. 20.12.2016

NOTES:

1. ALL DIMENSIONS ARE IN MM & ELEVATION ARE IN METER UNLESS NOTED OTHERWISE
2. ALL LEAN CONC. SHALL BE PCC (1:4:8)UNLESS NITED OTHERWISE.
3. UNLESS NOTED OTHERWISE LAP/ANCHOR LENGTH SHALL BE 50 TIMES THE DIA OF BARS
4. ALL STRUCTURAL STEEL CONFORM TO IS:2062 &SHALL PAINTED WITH A COAT OF APPROVED STEEL PRIMER &TWO COATS OF SYNTHETIC ENAMEL. PAINT UNLESS NOTED OTHERWISE.
5. DROP BOLTS SHOULD BO PROVIDED ON THE FAR SIDE ONLY.
6. ALL WELDS ARE 6MM THK. FILLET WELDS UNLESS NOTED OTHERWISE.
7. GATE & M.S.HOOKS TO BE PAINTED WITH ONE COAT APPROVED STEEL PRIMER BEFORE ERECTION &TWO COATS OF SYNTHETIC PAINTS AFTER ERECTION.
8. STRUCTURAL PIPES SHALL BE MEDIUM TYPE CONFORMING TO IS 1161/806

RELEASED FOR TENDER/CONSTRUCTION.

REV.	DESCRIPTION	PREP.	REVD	REVD.	REVD.	REVD.	APPD.	DATE
0.	REVISED AS MARKED							
		F(ENGG-CIVIL)	ADGE(ENGG-CIVIL)	GDE (ENGG-CIVIL)	ASTT GM(ENGG-CIVIL)	AGM (ENGG-CIVIL)	GM (ENGG-CIVIL)	

POWER GRID CORPORATION OF INDIA LIMITED
(A Government of India Enterprise)

TITLE: STANDARD SWITCHYARD GATE

SUB TITLE: DETAILS OF SWITCHYARD GATE

DRAWING NO: C:ENGG/CVL/SYD/GATE/2016/01 OF 01

SCALE NTS | REV 0

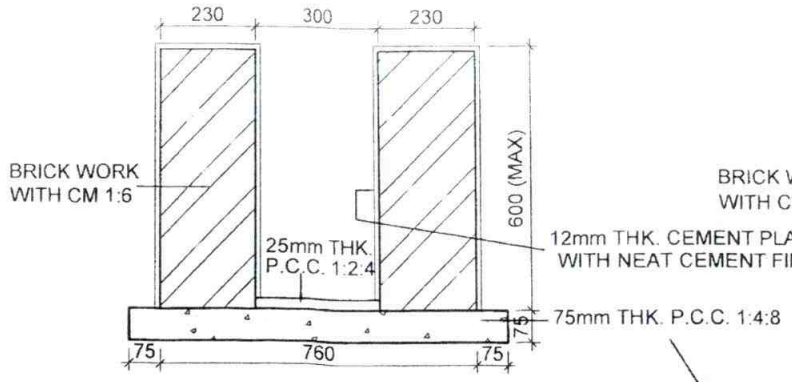

SECTION A-A

(FOR DEPTH UP TO 600 MM)

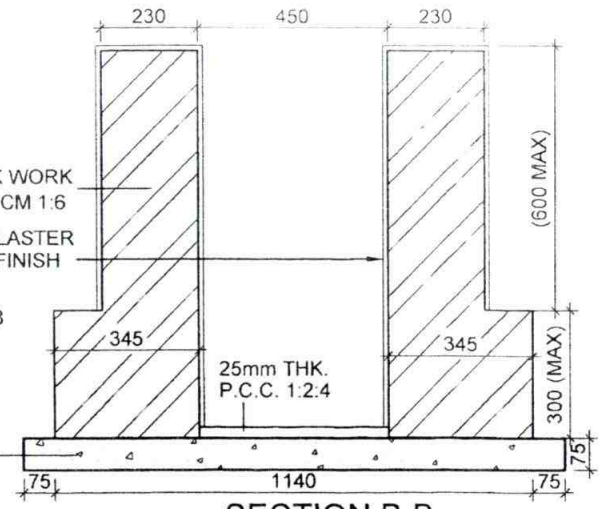

SECTION B-B

(FOR DEPTH FROM 600 TO 900 MM)

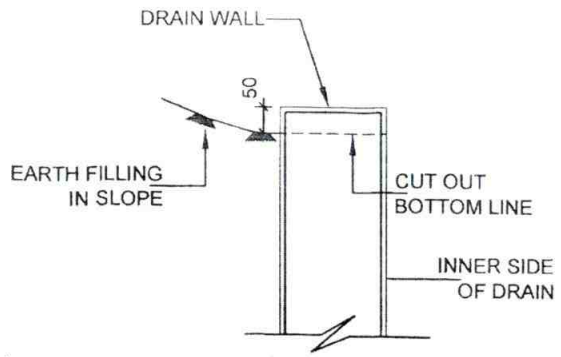

TYP. SECTION OF DRAIN EDGE TOWARDS EARTHEN SIDE

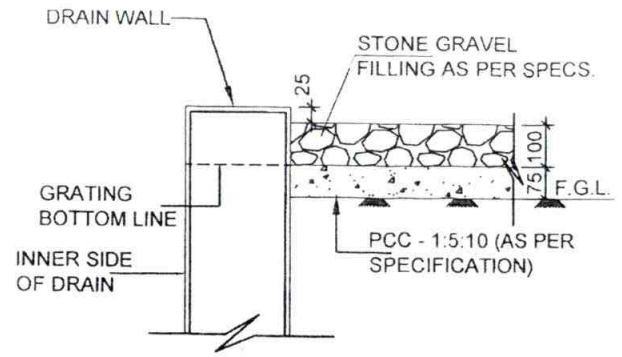

TYP. SECTION OF DRAIN EDGE TOWARDS SWITCHYARDS AREA

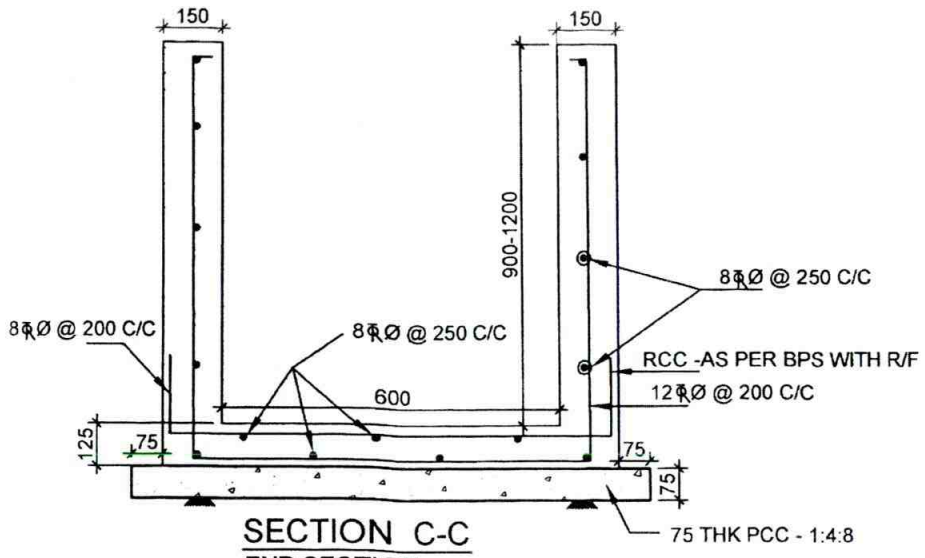

SECTION C-C

END SECTION

DEPTH : FROM 900 MM TO 1200 MM

LENGTH : 300 M

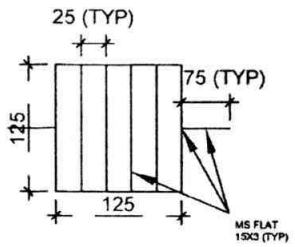

DETAIL "A"

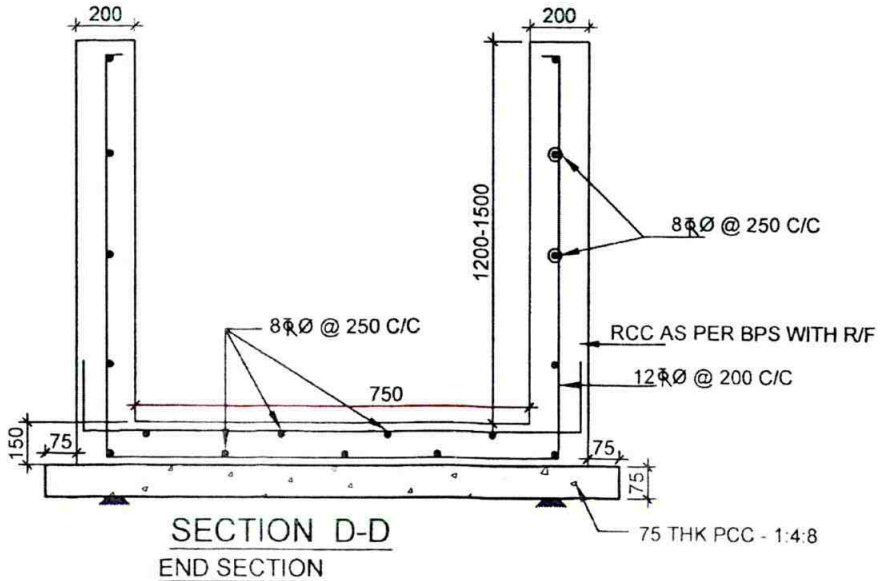

SECTION D-D

END SECTION

DEPTH : FROM 1200 MM TO 1500 MM

LENGTH : 300 M

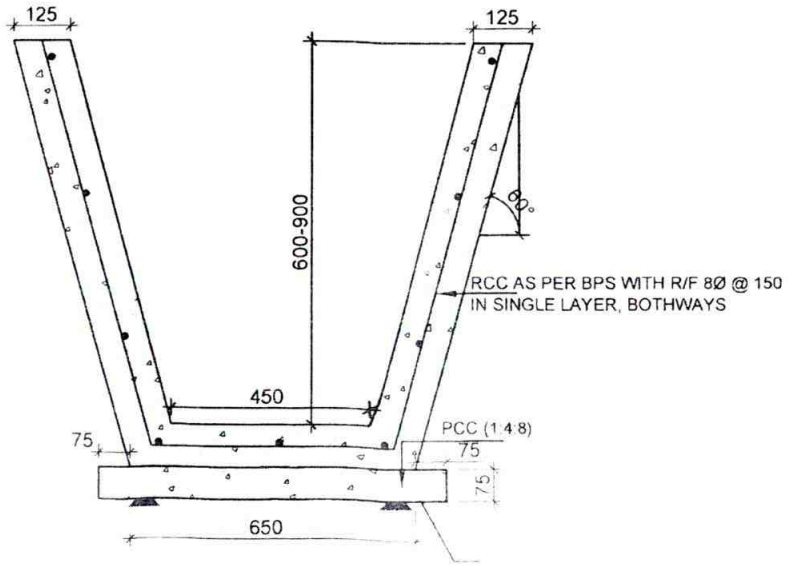

SECTION E-E

END SETION

DEPTH : FROM 600M TO 900MM

LENTH : 300M

NOTES:-

1. ALL DIMENSIONS ARE IN MM. & ELEVATIONS ARE IN METRE UNLESS NOTED OTHERWISE.
2. ALL DRAINS SHALL BE GIVEN A MINIMUM SLOPE OF 1: 1000 IN THE LONGITUDINAL DIRECTION
3. ALL REINFORCEMENT SHALL BE AS PER BPS.
4. MINIMUM DEPTH OF DRAIN SHALL BE 300MM BELOW FGL.
5. WHERE EVER TWO SECTIONS ARE MEETING A TRANSITION ZONE SHALL BE CONSTRUCTED HAVING LENGTH 1000mm.
6. 75X75mm WEEP HOLE SHALL BE PROVIDED AT SPACING OF 1500mm HORIZONTALY & 300mm VERTICALLY IN STAGGERED MANNER. HOWEVER 75MMDIA PVC PIPE WEEP HOLE SHALL BE PROVIDED IN CASE OF RCC DRAIN.
7. DEPTH OFF DRAIN IS TAKEN AS HEIGHT FROM TOP OF DRAIN TO INVERT OF DRAIN
8. LAYOUT OF DRAIN WILL BE ISSUED DURING DETAILED ENGINEERING.
9. IF EXPANSIVE SOIL IS ENCOUNTERED AT FOUNDING LVL. IT SHALL BE REMOVED TO AMIN. DEPTH OF 300 MM. AND SHALL BE REPLACED BY WELL COMPACED (IN 03 EQ. LAYERS) LOCALLY AVAILABLE C.N.S. MATERIAL /SAND.
10. WHEREEVER DRAINS ARE COMING IN THE SIDE OF SWITCHYARD / TOWNSHIP ROAD, PROPER COMPACTION BETWEEN EDGE OF ROAD AND DRAIN SHOULD BE ENSURED
11. 20MM WIDE EXPANSION JOINT SHALL BE PROVIDED IN RCC DRAIN @ 45M C/C. THE JOINT SHALL BE FILLED WITH 1:4 CEMENT SAND MORTAR.

APPROVED BY ED (ENGG.TL-SS-CIVIL) VIDE NOTE REFERENCE NO. C/ENGG/STD.DRG. /Civil Works/03/2016 DTD. 20.12.2016

RELEASED FOR TENDER/CONSTRUCTION.

REV	DESCRIPTION	PREP. JE(ENGG-CIVIL)	REVD ACDE(ENGG-CIVIL)	REVD. CDE (ENGG-CIVIL)	REVD ASTT.GM(ENGG-CIVIL)	REVD. AGM (ENGG-CIVIL)	APPD GM (ENGG-CIVIL)	DATE
0	REVISED AS MARKED							10/1/17

POWER GRID CORPORATION OF INDIA LIMITED
(A Government of India Enterprise)

TITLE: STANDARD DRAIN

SUB TITLE: DETAILS OF DRAIN

DRAWING NO: C/ENGG/STD/DRAIN/2016 (SHEET 01 OF 02)

SCALE NTS | REV 0

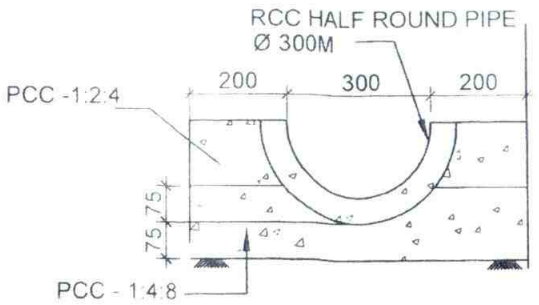

(TO BE USED AT BEGINING 150MM DEPTH)

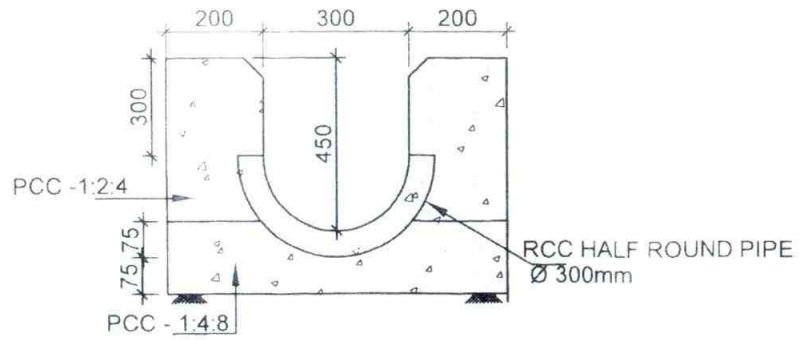

(TO BE USED 150 TO 450 MM DEPTH)

SECTION F-F

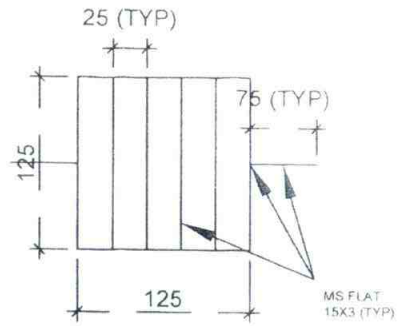

DETAIL "A"

TYP. ELEVATION OF DRAIN APPLICABLE FOR GRAVEL SIDE AND ROAD SIDE.

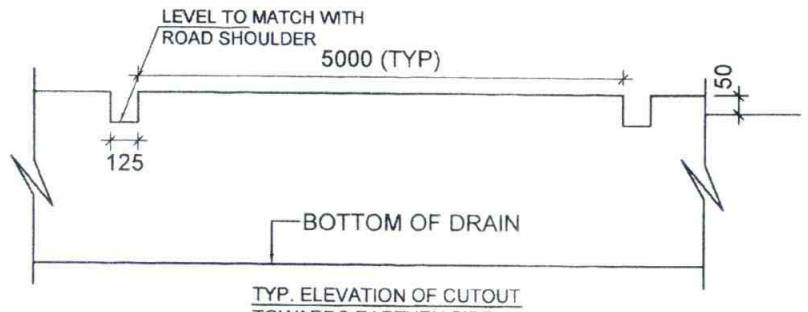

TYP. ELEVATION OF CUTOUT TOWARDS EARTHEN SIDE

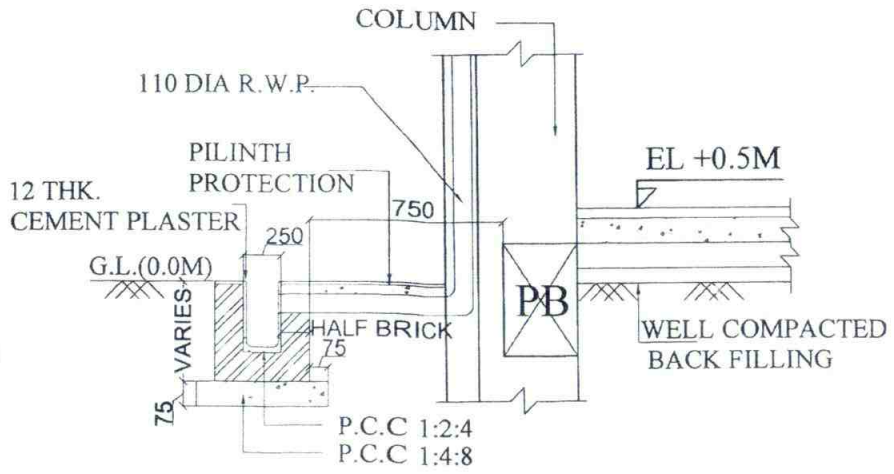

PLINTH PROTECTION DRAIN WITH RAIN WATER PIPE

APPLICABLE FOR ALL BUILDING (REFER TS MEASUREMENT CLAUSE)

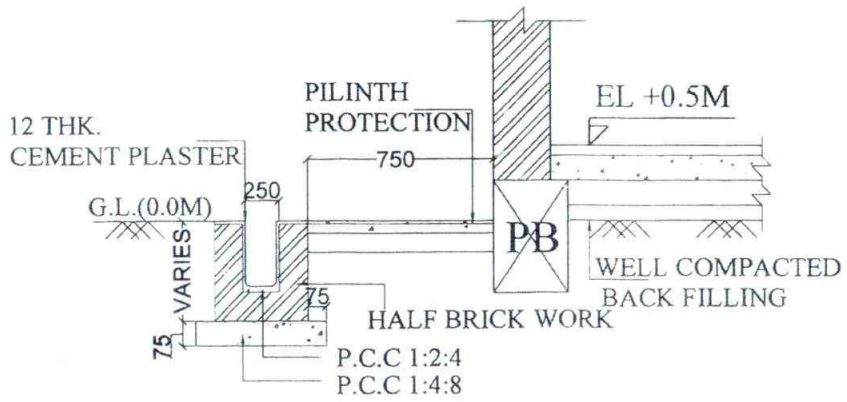

PLINTH PROTECTION DRAIN (GENERAL)

APPLICABLE FOR ALL BUILDING (REFER TS MEASUREMENT CLAUSE)

APPROVED BY ED (ENGG.TL-SS-CIVIL) VIDE NOTE REFERENCE NO. C/ENGG/STD.DRG. /Civil Works/ 03/2016 DTD 20.12.2016

REV	DESCRIPTION	PREP	REVD	REVD	REVD	REVD	APPD	DATE
0.	REVISED AS MARKED		ACDE(ENGG-CIVIL)			AGM(ENGG-CIVIL)	GM(ENGG-CIVIL)	

RELEASED FOR TENDER/CONSTRUCTION.

POWER GRID CORPORATION OF INDIA LIMITED
(A Government of India Enterprise)

TITLE: STANDARD DRAIN

SUB TITLE: DETAILS OF DRAIN

DRAWING NO: C/ENGG/STD/DRAIN/2016 (SHEET 02 OF 02)

SCALE: NTS

REV: 0

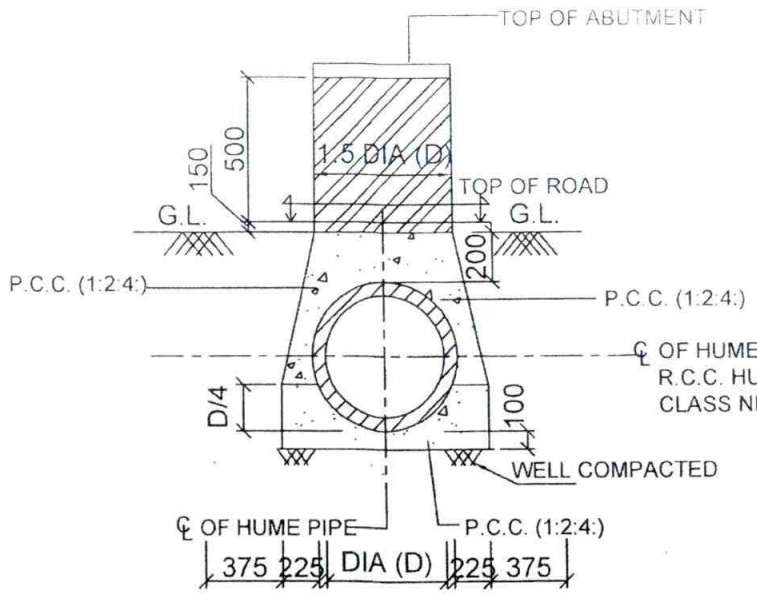

SECTION 1-1 FOR SINGLE PIPE

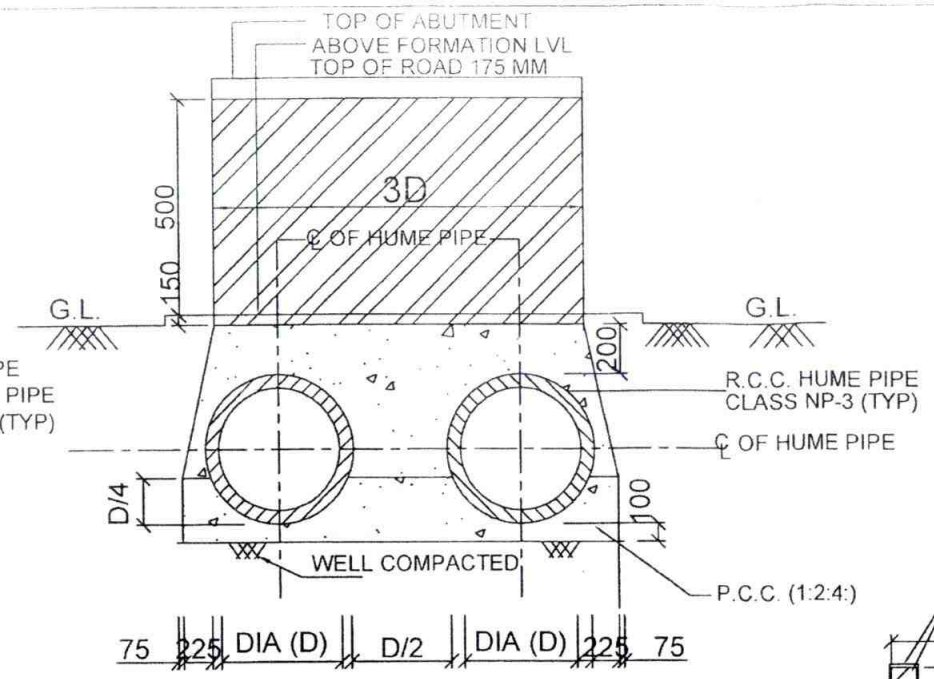

SECTION 2-2 FOR DOUBLE PIPE CULVERT

NOTES:-

1. ALL DIMENSIONS ARE IN MM.
2. DO NOT SCALE THE DRG.
3. RCC HUME PIPE SHALL BE OF GRADE NP3.
4. CLASS 75 BRICKS SHALL BE USED.
5. CONCRETE MIX USE FOR COVERING RCC PIPE SHALL BE 1:2:4(1 CEMENT: 2 COURSE SAND: 4 STONE AGGREGATE OF 20 MM NORMINAL SIZE)
6. LEAN CONCRETE SHALL BE 1:4:8 (1 CEMENT: 4 COURSE SAND: 8 STONE AGGREGATE OF 40 MM NORMINAL SIZE)
7. BRICK MASSONARY SHALL BE DONE USING CEMENT MORTAR (1CEMENT: 6 COURSE SAND)

IMP:

1. SUITABLE SECTION SHALL BE ADOPTED AS PER SITE CONDITIONS

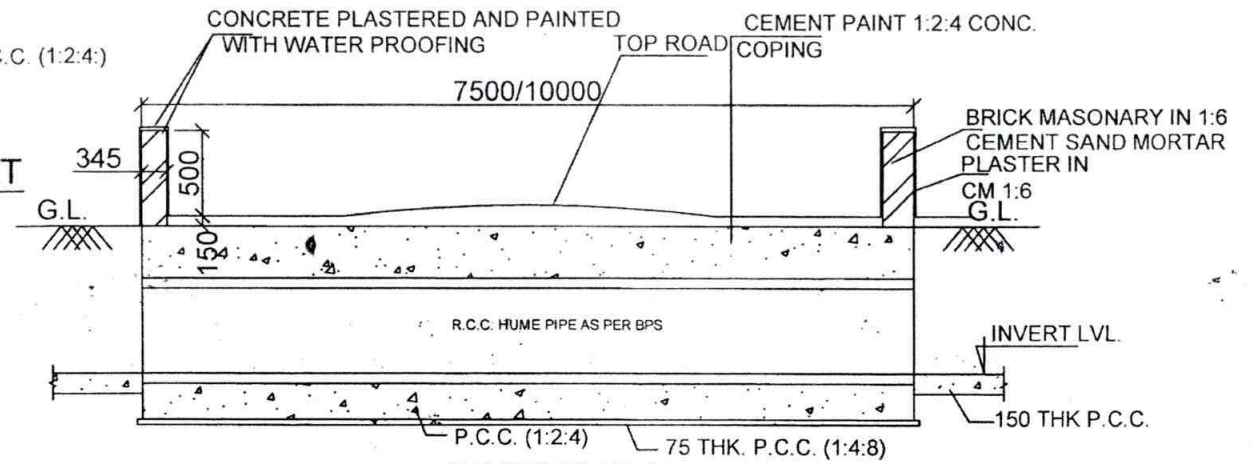

SECTION 3-3

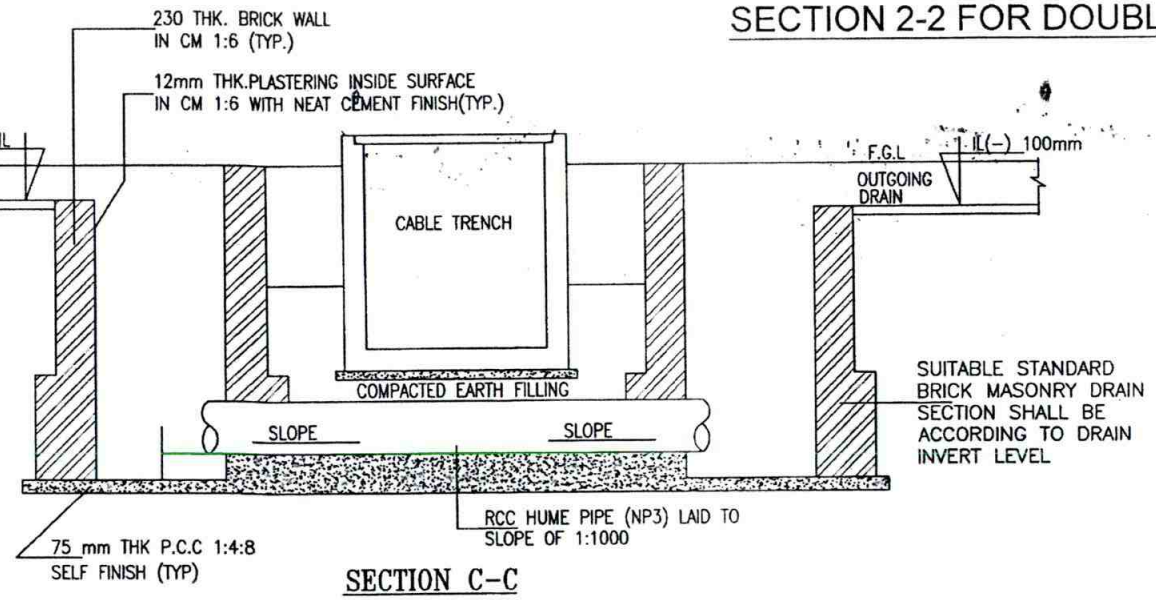

SECTION C-C

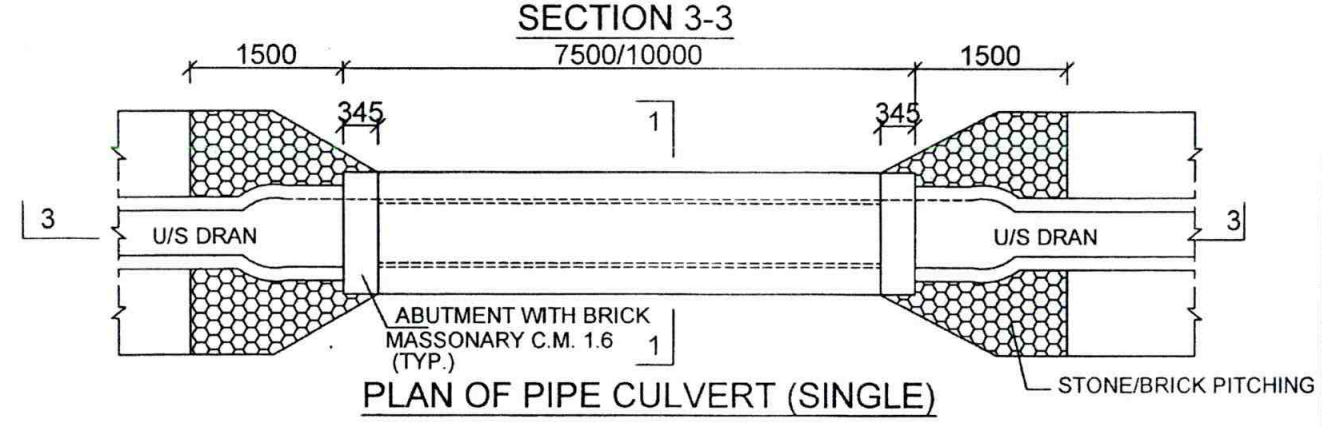

PLAN OF PIPE CULVERT (SINGLE)

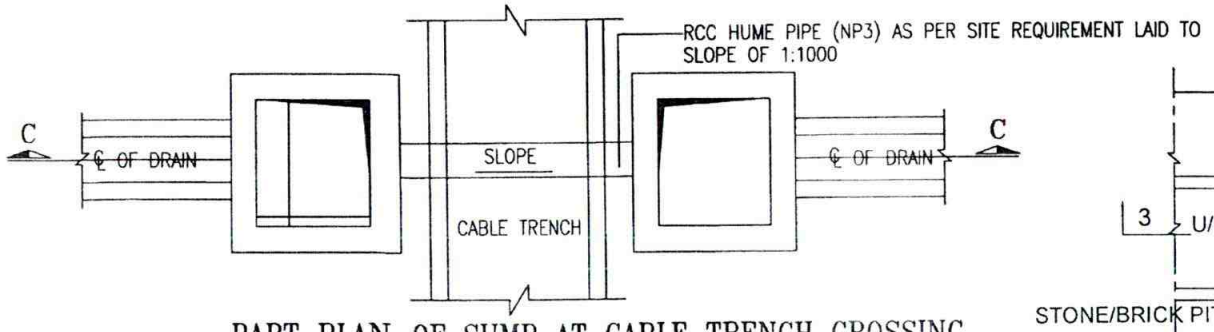

PART PLAN OF SUMP AT CABLE TRENCH CROSSING

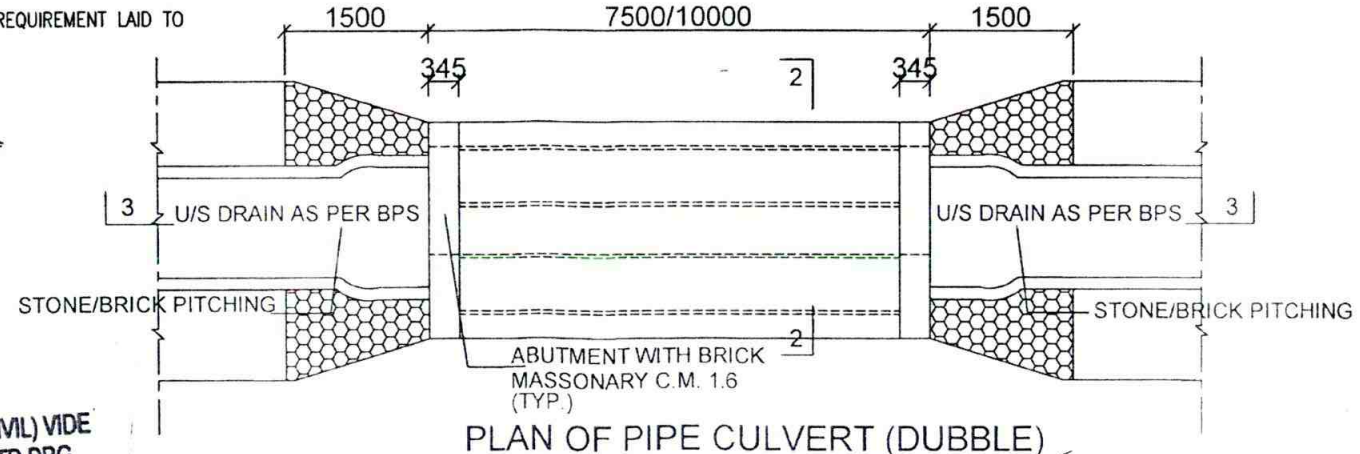

PLAN OF PIPE CULVERT (DUBBLE)

APPROVED BY ED (ENGG.TL-SS-CIVIL) VIDE NOTE REFERENCE NO C/ENGG/STD.DRG. /Civil Works/ 03/2016 DTD 20.12.2016

RELEASED FOR TENDER/CONSTRUCTION.

REV.	DESCRIPTION	PREP.	REVD.	REVD.	REVD.	REVD.	APPD	DATE
0.	REVISED AS MARKED							
		JE(ENGG-CIVIL)	ACDE (ENGG-CIVIL)	CDE (ENGG-CIVIL)	ASTT.GM(ENGG-CIVIL)	AGM (ENGG-CIVIL)	GM (ENGG-CIVIL)	

POWER GRID CORPORATION OF INDIA LIMITED
(A Government of India Enterprise)

TITLE: STANDARD ROAD CULVERTS

SUB TITLE: DETAIL OF ROAD CULVERTS

DRAWING NO: C/ENGG/STD/ROAD CULVERTS/2016/01 OF 01

SCALE NTS

REV 0

NOTES:

1. ALL DINMENSION ARE IN MM UNLESS NOTED OTHERWISE.
2. CAMBER OF 1:50 SHALL BE PROVIDED.
3. THE WORK SHALL BE CARRIED OUT AS PER CPWD SPECIFICATION.
4. DRAIN SHALL BE AS PER DRAIN LAY OUT.
5. TOP OF ROAD SHALL BE 175MM ABOVE FINISHED GROUND LEVEL.
6. MATERIAL SPECIFICATION SHALL CONFIRM TO CPWD SPEC.
7. 100MM DIA. RCC HUME PIPE SHALL BE PLACED ACROSS THE ROAD AT EVERY 100M INTERVAL. ALONG THE ROAD.
8. FINISHED TOP OF ROAD CREST SHALL BE 175 MM (MIN.) ABOVE F.G.L. HOWEVER, IN CASE APPROACH ROAD IS BEING CONSTRUCTED IN UNLEVELLED AREA THEN CREST LEVEL OF ROAD SHALL BE MINIMUM 300 MM ABOVE H.F.L.
9. IF EXPANSIVE SOIL IS ENCOUNTERED AT FOUNDING LVL. IT SHALL BE REMOVED TO A MIN. DEPTH OF 300 MM AND SHALL BE REPLACED WELL COMPACTED (IN 02 EQ LAYERS) C.N.S. MATERIAL.

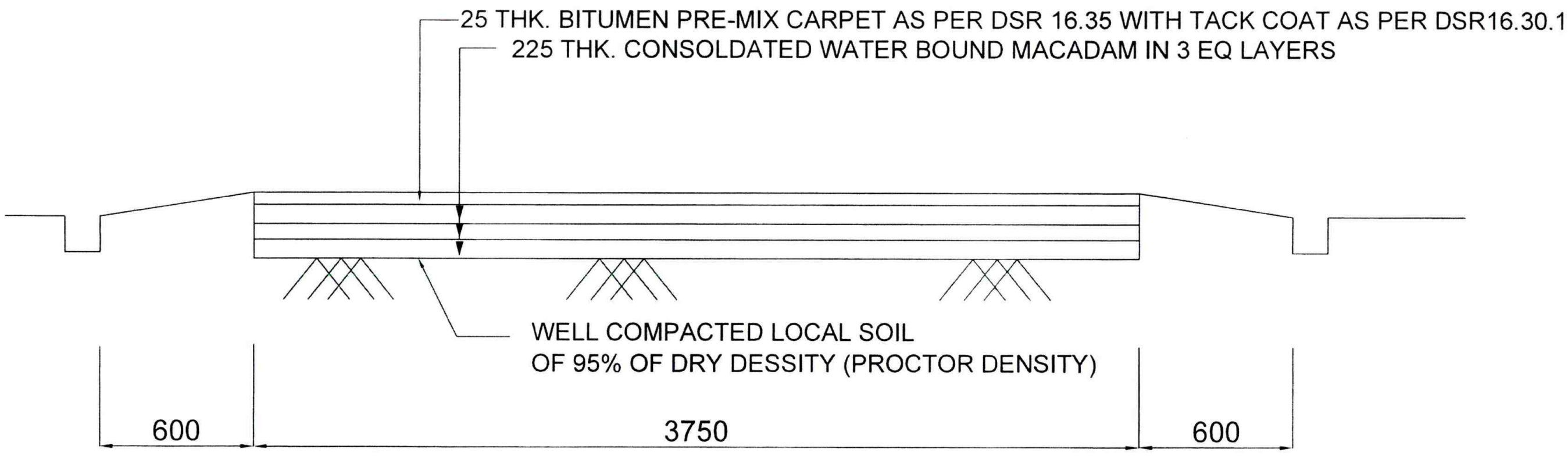

TYP. CROSS SECTION OF 3.75 M WIDE ROAD

POWER GRID CORPORATION
OF INDIA LIMITED
(A Government of India Enterprise)

PROJECT: 765/400 AND 400/220 kV SUBSTATION

TITLE: DETAILS OF BITUMINOUS ROAD

REV	DESCRIPTION	PERP	REVD.	REVD.	APPD	DATE	SCALE	DRAWING NO		REV
0						19/10/2020	NTS		C/ENGG/BITM/ROAD/01	R-0

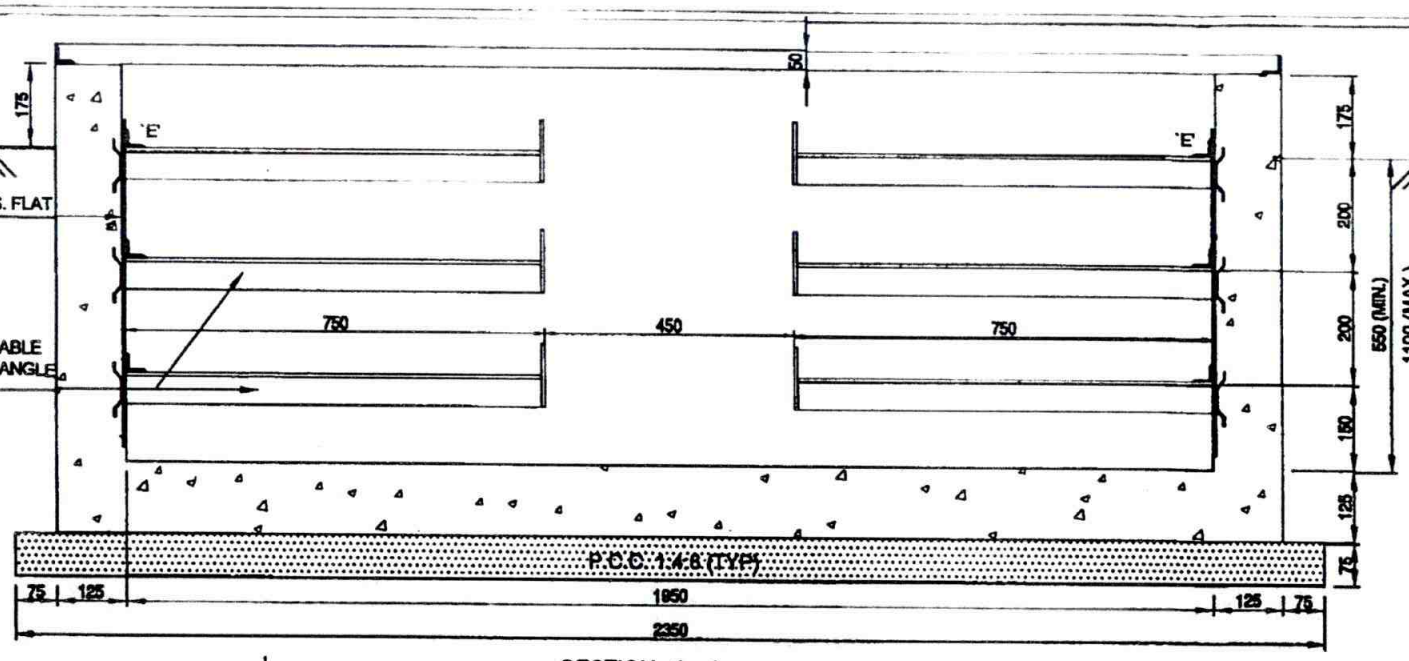

SECTION 1–1

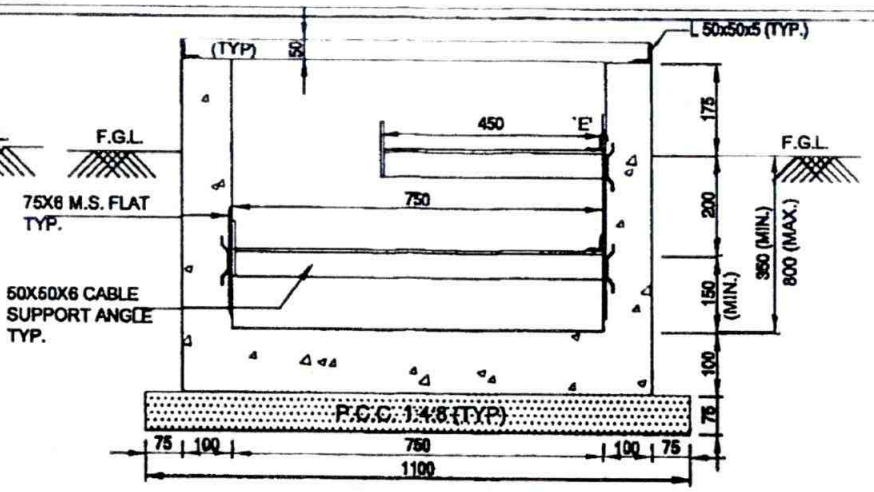

SECTION 3–3

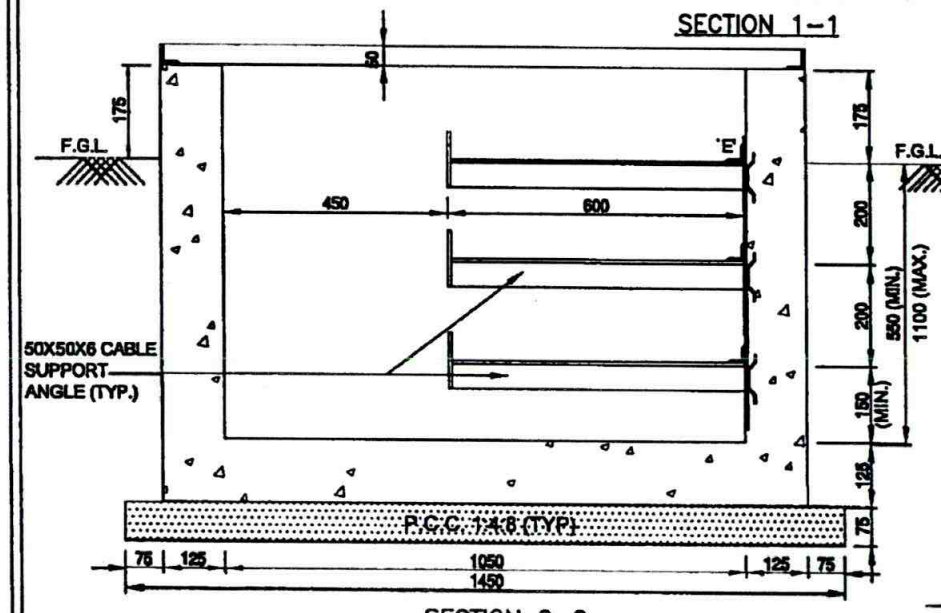

SECTION 2–2

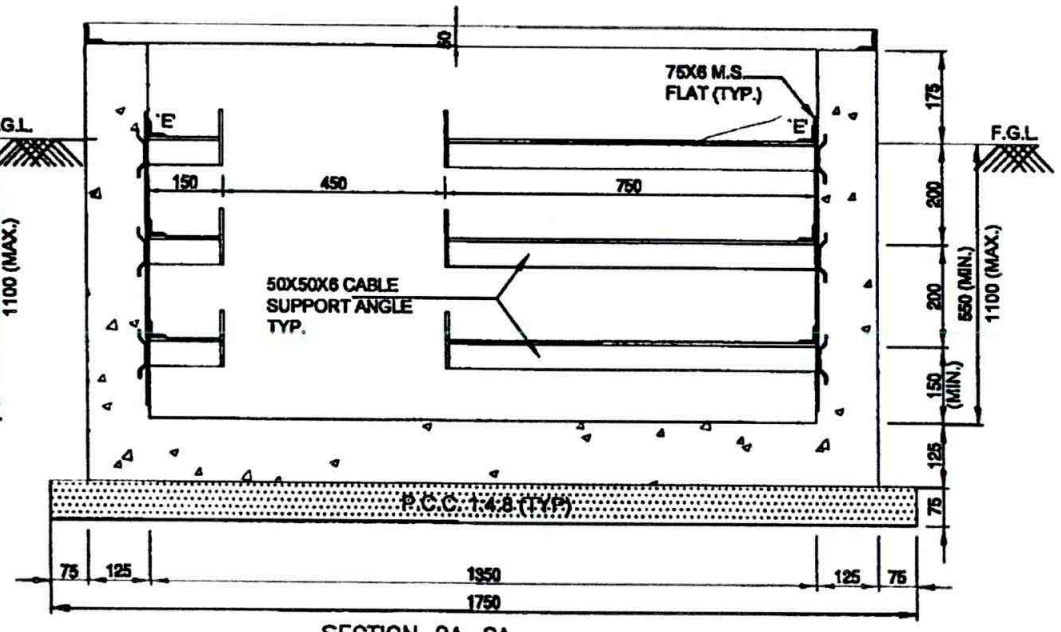

SECTION 2A–2A

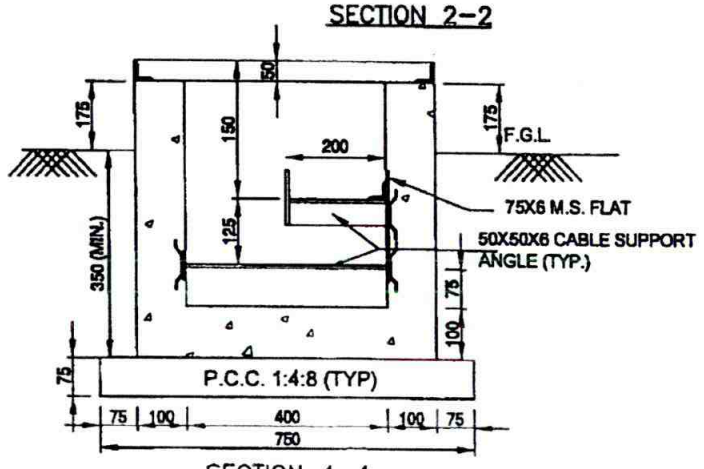

SECTION 4–4

GENERAL NOTES:

1. ALL DIMENSIONS ARE IN MM. UNLESS NOTED OTHERWISE.
2. DO NOT SCALE THE DRAWING, ONLY WRITTEN DIMENSIONS TO BE FOLLOWED.
3. LAP LENGTH SHALL BE 47 TIMES DIA. OF BAR.
4. PROVIDE CLEAR COVER TO REINFORCEMENT AS UNDER.
   a) 25MM FOR INNER SIDE OF CABLE TRENCH.
   b) 50MM FOR OUTER SIDE AND BOTTOM OF CABLE TRENCH
5. ALL R.C.C. SHALL BE AS PER BPS ITEMS UNLESS NOTED OTHERWISE.
6. LIFTING HOOK SHALL BE PROVIDED IN EVERY TENTH COVER SLAB.
7. NECESSARY OPENINGS SHALL BE PROVIDED AT APPROPRIATE LOCATIONS TO TAKE OUT CABLES.
8. FOR ACTUAL DEPTH OF TRENCHES REFER APPROVED CABLE TRENCH LAYOUT
9. F.G.L. DENOTES FINISHED GROUND LEVEL.
10. ALL CABLE TRENCHES SHALL HAVE A SLOPE OF 1:1000 IN THE DIRECTION OF MAIN RUN AWAY FROM THE BUILDING.
11. EARTHING CONDUCTOR 'E' 50x6 M.S. FLAT SHALL BE WELDED TO THE CABLE SUPPORTING STRUCTURE BEFORE INSTALLATION OF CABLE. EARTHING CONDUCTOR 'E' SHALL BE PROVIDED ON THE TOP TIER OF EACH CABLE TRENCH SECTION.
12. ALL STEEL STRUCTURES PLATES SHALL BE PAINTED WITH ANTI–CORROSIVE PAINT TO AN EVEN SHADE TWO OR MORE COATS OVER A COAT OF SUITABLE STEEL PRIMER BEFORE INSTALLATION OF CABLES AND EARTHING CONDUCTOR SHALL BE PAINTED RED.
13. CONSTRUCTION JOINT SHALL BE PROVIDED AT 30M OR AS PER SITE REQUIREMENT BUT NOT EXCEEDING 30M.
14. ALL SUPPORT ANGLES SHALL BE 50x50x6
15. ANCHORING FLAT (75x6) SHALL BE PROVIDED AT EACH SUPPORT ANGLE POINT.
16. INCASE EXPANSIVE SOIL IS ENCOUNTERED AT FOUNDING LEVEL, IT SHALL BE REMOVED TO A MINIMUM DEPTH OF 300 MM AND SHALL BE REPLACED BY WELL COMPACTED LOCALLY AVAILABLE C.N.S. MATERIAL OR LOCAL SAND.
17. ALL REINFORCEMENT STEEL BARS SHALL BE TMT OR HYSD BARS CONFORM TO IS:1786–1985 OF GRADE Fe500

NOTE:- THIS DRAWING SUPERCEDES STANDARD CABLE TRENCH DRAWINGS (DRG. NO.: C/ENGG/STD/CT/ 01 TO 05)

REV	DESCRIPTION	CDE (ENGG-CIVIL)	AGM (ENGG-CIVIL)	AGM (ENGG-S/S)	GM (ENGG-S/S)	APVD. BY GM (ENGG-CIVIL)	DATE
00	CABLE TRENCH SECTION 2A-2A INTRODUCED AND CABLE TRENCH CROSSING SECTIONS MODIFIED	14/9					16/9/16

RELEASED FOR TENDER/CONSTRUCTION

POWER GRID CORPORATION OF INDIA LIMITED
(A Government of India Enterprise)

PROJECT: STANDARD CABLE TRENCH FOR SUBSTATION SWITCH YARD

TITLE: DETAILS OF CABLE TRENCHES AND CABLE TRENCH ROAD CROSSING

DRG NO.: C/ENGG/STD/2016/RCT/01 (Sheet 01 of 04)

SCALE: NTS

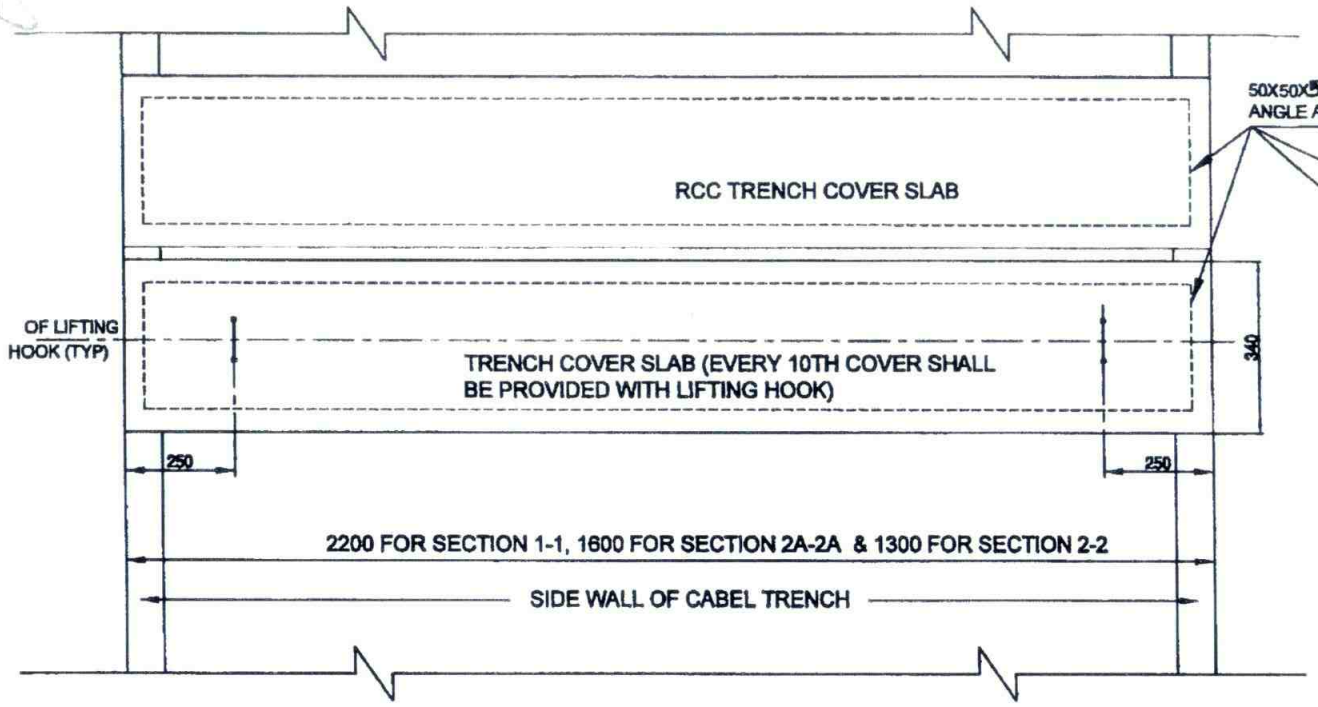

RCC COVER PLAN FOR SECTION (1–1) (2–2) & (2A–2A)

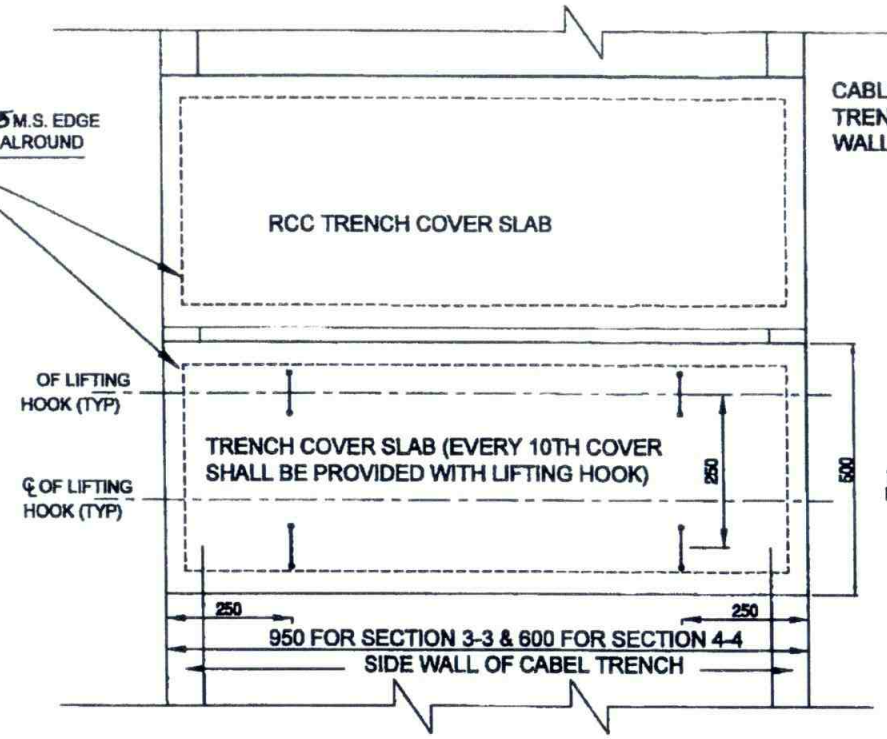

DETAIL OF TRENCH COVER SLAB FOR SECTION (3–3) & (4–4)

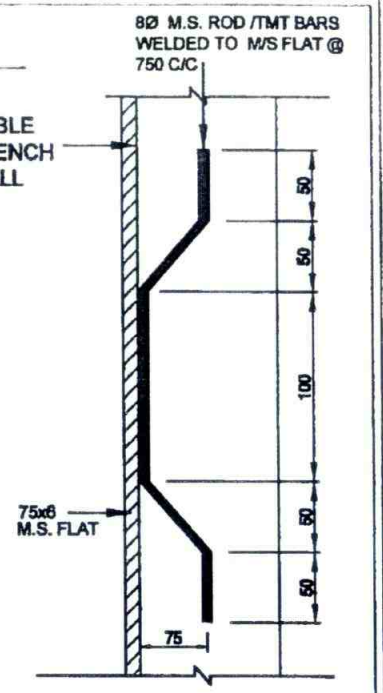

TYPICAL DETAILS OF ANCHORING M.S.FLAT 75X6

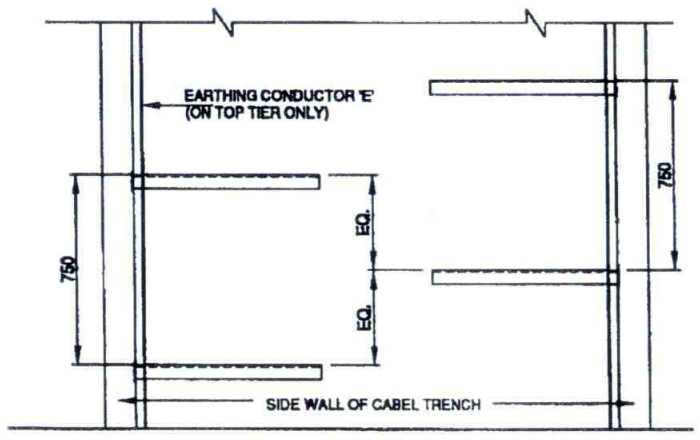

PLAN
CABLE TRAY SUPPORT FOR SECTION 1–1

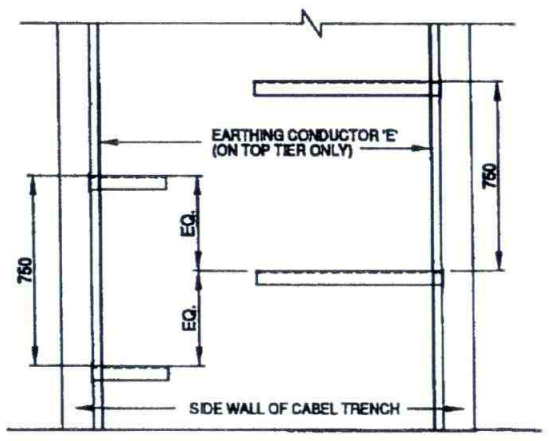

PLAN
CABLE TRAY SUPPORT FOR SECTION 2A–2A

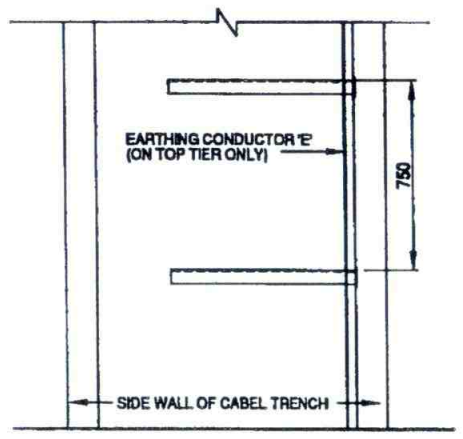

PLAN
CABLE TRAY SUPPORT FOR SECTION 2–2 & 3–3

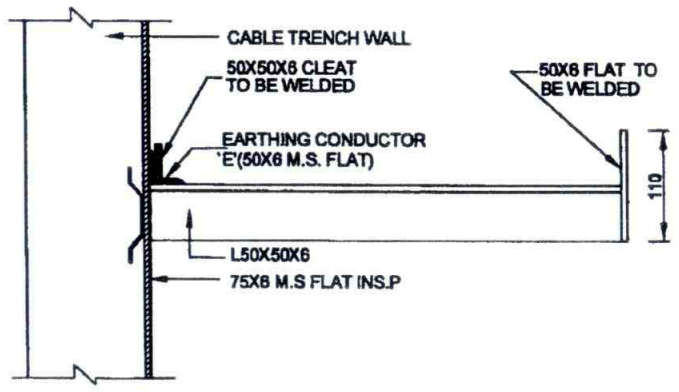

TYPICAL CABLE SUPPORT

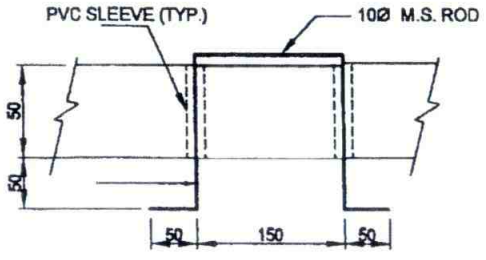

DETAIL OF LIFTING HOOK

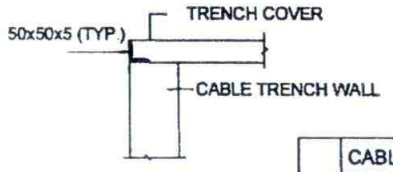

TYPICAL DETAIL OF SLAB SUPPORT

NOTE:- THIS DRAWING SUPERCEDES STANDARD CABLE TRENCH DRAWINGS (DRG. NO.: C/ENGG/STD/CT/ 01 TO 05)

REV	DESCRIPTION	CDE (ENGG-CIVIL)	AGM (ENGG-CIVIL)	AGM (ENGG-S/S)	GM (ENGG-S/S)	APVD. BY GM (ENGG-CIVIL)	DATE
00	CABLE TRENCH SECTION 2A-2A INTRODUCED AND CABLE TRENCH CROSSING SECTIONS MODIFIED						

RELEASED FOR TENDER/CONSTRUCTION

POWER GRID CORPORATION OF INDIA LIMITED
(A Government of India Enterprise)

PROJECT: STANDARD CABLE TRENCH FOR SUBSTATION SWITCH YARD

TITLE: DETAILS OF CABLE TRENCHES AND CABLE TRENCH ROAD CROSSING

DRG NO.: C/ENGG/STD/2016/RCT/01 (Sheet 02 of 04)

SCALE: NTS

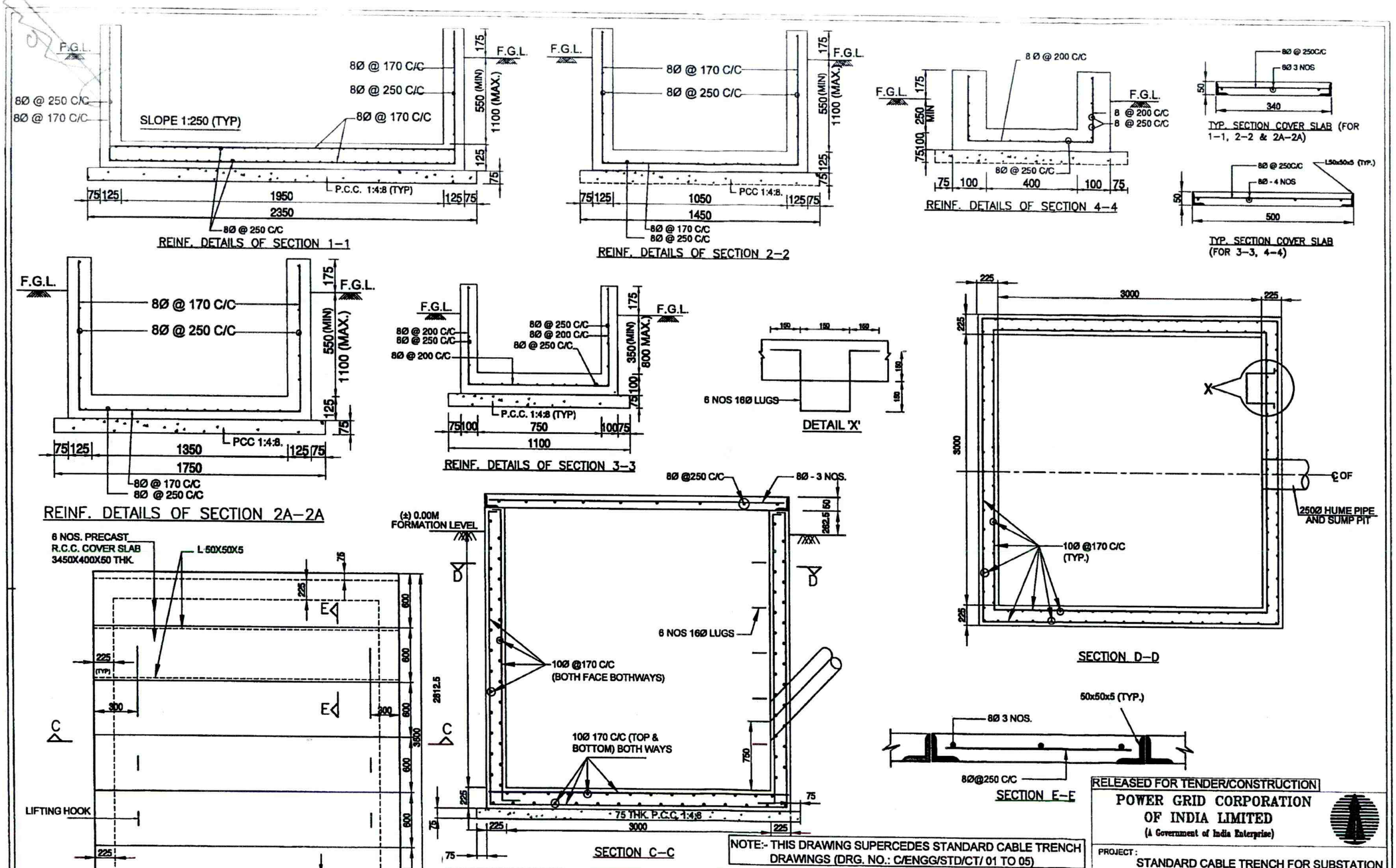

NOTE:- THIS DRAWING SUPERCEDES STANDARD CABLE TRENCH DRAWINGS (DRG. NO.: C/ENGG/STD/CT/ 01 TO 05)

REV	DESCRIPTION	CDE (ENGG-CIVIL)	AGM (ENGG-CIVIL)	AGM (ENGG-S/S)	GM (ENGG-S/S)	APVD. BY GM (ENGG-CIVIL)	DATE
00	CABLE TRENCH SECTION 2A-2A INTRODUCED AND CABLE TRENCH CROSSING SECTIONS MODIFIED	14/9	09/05				16/5/16

RELEASED FOR TENDER/CONSTRUCTION

POWER GRID CORPORATION OF INDIA LIMITED
(A Government of India Enterprise)

PROJECT : STANDARD CABLE TRENCH FOR SUBSTATION SWITCH YARD

TITLE : DETAILS OF CABLE TRENCHES AND CABLE TRENCH ROAD CROSSING

DRG. NO.: C/ENGG/STD/2016/RCT/01 (Sheet 03 of 04)

SCALE: NTS

TB202213-1001684-SS33204-CABLE TRENCH-C/SORG/00/REL-CON/Page 3 of 4

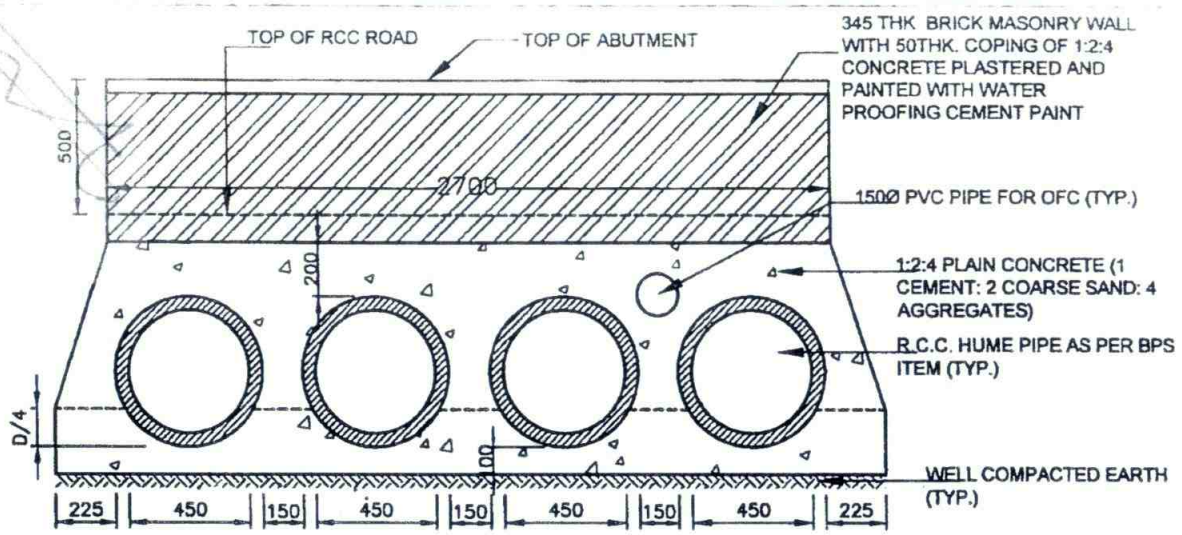

ROAD CROSSING SECTION FOR CABLE TRENCH FOR "SEC-1-1 & 2A-2A"

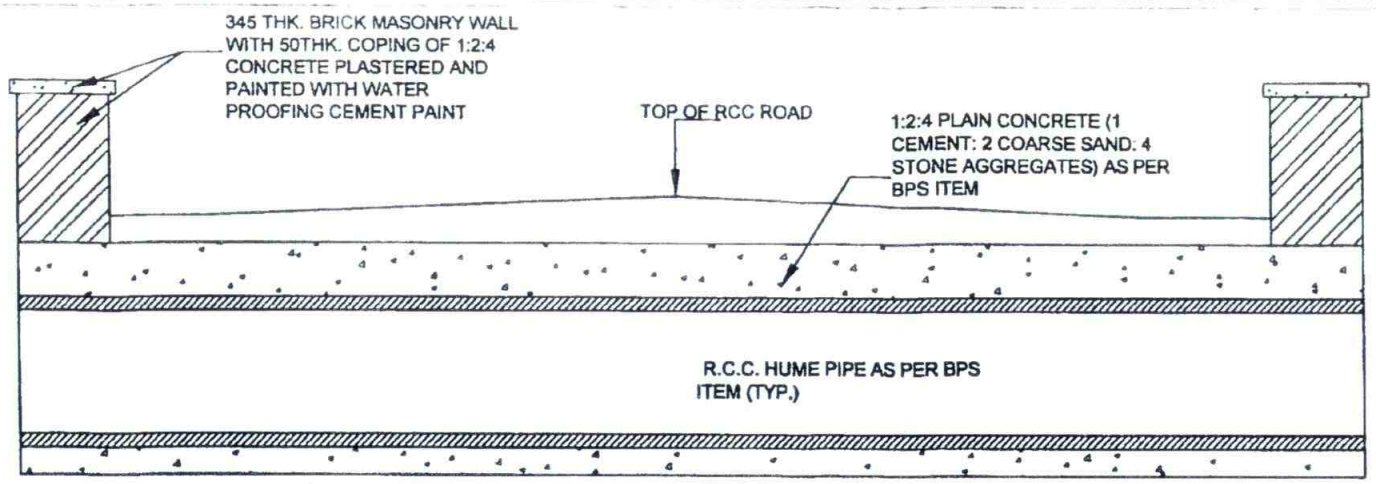

TYPICAL LONGITUDINAL ROAD CROSSING SECTION OF CABLE TRENCH THROUGH RCC PIPE

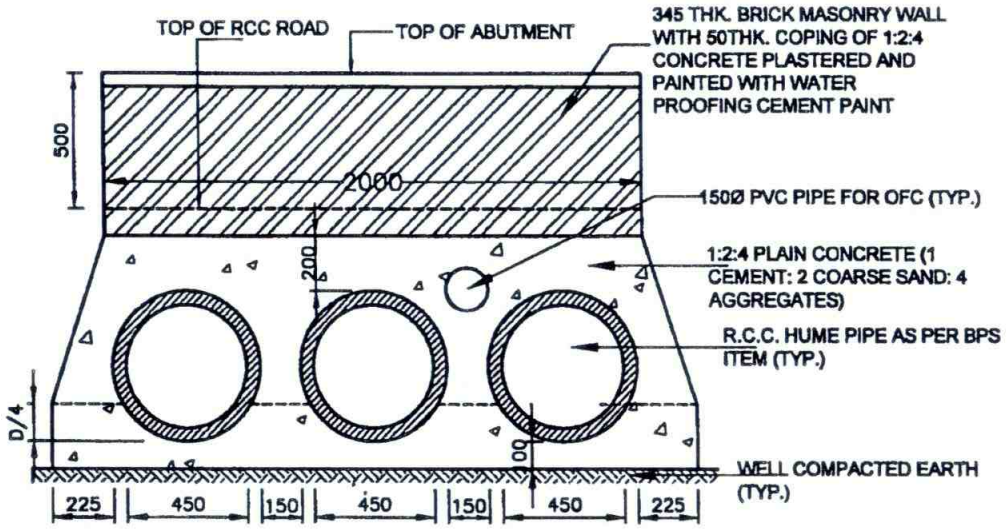

ROAD CROSSING SECTION FOR CABLE TRENCH "SEC.-2-2"

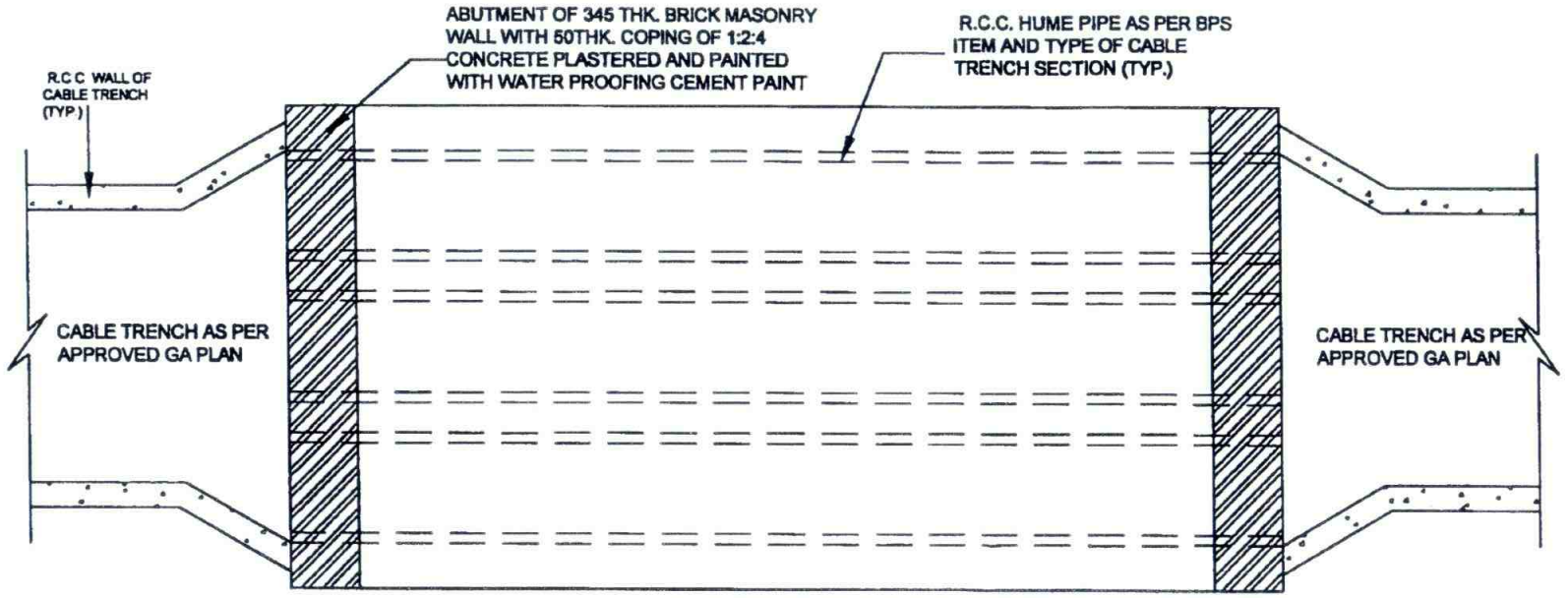

TYPICAL PLAN OF CABLE TRENCH WITH ROAD CROSSING

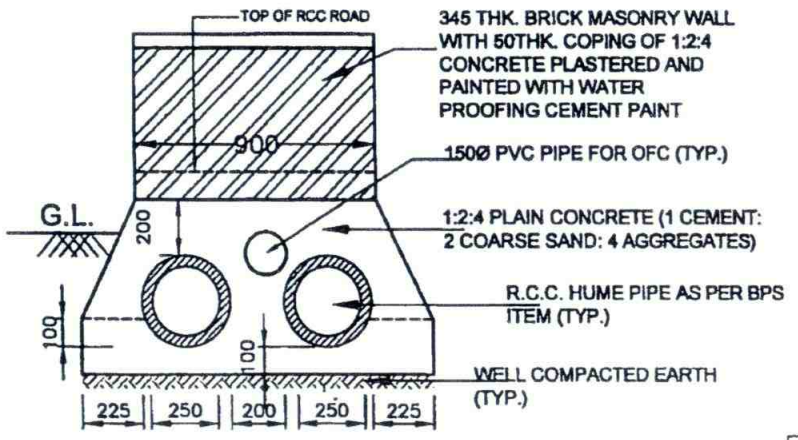

ROAD CROSSING SECTION FOR CABLE TRENCH "SEC.-3-3"

NOTE:- THIS DRAWING SUPERCEDES STANDARD CABLE TRENCH DRAWINGS (DRG. NO.: C/ENGG/STD/CT/ 01 TO 05)

REV	DESCRIPTION	CDE (ENGG-CIVIL)	AGM (ENGG-CIVIL)	AGM (ENGG-S/S)	GM (ENGG-S/S)	APVD. BY GM (ENGG-CIVIL)	DATE
00	CABLE TRENCH SECTION 2A-2A INTRODUCED AND CABLE TRENCH CROSSING SECTIONS MODIFIED						

RELEASED FOR TENDER/CONSTRUCTION

POWER GRID CORPORATION OF INDIA LIMITED
(A Government of India Enterprise)

PROJECT : STANDARD CABLE TRENCH FOR SUBSTATION SWITCH YARD

TITLE : DETAILS OF CABLE TRENCHES AND CABLE TRENCH ROAD CROSSING

DRG. NO.: C/ENGG/STD/2016/RCT/01 (Sheet 04 of 04)

SCALE: NTS

STANDARD
TECHNICAL SPECIFICATION
FOR
SUBSTATION- CIVIL WORKS

SUB-STATION CIVIL WORKS – REV 11A

पावर ग्रिड कारपोरेशन ऑफ़ इंडिया लिमिटेड
(भारत सरकार का उद्यम)
POWER GRID CORPORATION OF INDIA LIMITED
(A GOVERNMENT OF INDIA ENTERPRISE)

Document Code no.:
TECHNICAL SPECIFICATION: CIVIL WORKS
C/ENGG/SPEC/CIVIL/REV -11A/JUN'18

पावर ग्रिड कारपोरेशन आफ इण्डिया लिमिटेड

(केन्द्रीय अभियांत्रिकी विभाग)

Ref: TS-REV11A/Cor.Slip-1 **Date: 07.01.2021**

Sub: TS –REV 11A- Specification of Civilworks- minor modification regarding.

S. No	Section/ Clause. no.	Existing Provision	Proposed for modification
1	11.2.1	Purlins, girts, necessary clips and other cold rolled structural members shall conform to the physical specification of **ASTM A570 (Grade 50) or equivalent IS Standards** having a minimum yield strength of 340 MPa and shall be of Pre galvanised having a total coating thickness of 275 gm/sqm. inclusive of both sides)	Purlins, girts, necessary clips and other cold rolled structural members shall conform to the physical specification of **ASTM A570 (Grade 50) or IS 277 Standards** having a minimum yield strength of 340 MPa and shall be of Pre galvanised having a total coating thickness of 275 gm/sqm. inclusive of both sides)
2	11.3.1	The material of sheets shall confirm to **ASTM 792 M** with minimum yield strength of 340 Mpa	The material of sheets shall confirm to **ASTM 792 M (or) it shall confirm to BIS standards. (i.e - Base material IS 513 + Substrate- IS 15961+Color coating- IS 15965)** with minimum yield strength of 340 Mpa

This is issued with the approval of competent authority vide approved NS No: CC-EGCV-25-/0018 /2020/Engg-Civil Grp3

07.01.21.

Chief Manager,

CC-Engg-CVL

CONTENTS: TECHNICAL SPECIFICATION CIVIL WORK – 11A

Description		Page No.
Salient changes made over previous TS Rev-11A		4
Salient changes made over previous TS Rev-11		5
1.0	General	6
2.0	Geotechnical Investigation	7
2.1	Scope	7
2.2	Bore Holes	8
2.3	Trial Pits	8
2.4	Electrical Resistivity Test	8
2.5	Plate Load Test	10
2.6	Water Sample	10
2.7	Back Filling Of Bore Holes	11
2.8	Laboratory test	11
2.9	Test results and Reports	11
3.0	Standard drawings	13
3.1	Road, road culverts and rail cum road	14
3.2	Drains	15
3.3	Chain link fencing and switchyard gate	15
3.4	Rain water harvesting	15
3.5	Cable trenches	16
3.6	Boundary wall	16
4.0	Stone spreading and anti-weed treatment	20
5.0	Excavation and backfill of foundation	22
6.0	Cement	23
7.0	Chemical Admixture & Additives	24
8.0	Reinforced Concrete Cement	24
8.1	Design Mix Concrete	24
8.2	Volumetric Mix Concrete	25
9.0	Reinforcement Steel	25
10.0	Drawing and design to be developed by contractor/ employer during engineering	26
10.1	Control room building	26
10.2	GIS building / GIS hall	27
10.3	Building design consideration	29
10.4	Design loads	31
10.5	Design of foundation for building & other switchyard structures	33
10.6	Design of transformer and reactor foundation	34
10.7	Design of fire protection wall	35
10.8	Design of water tanks, channels, sumps, trenches and other underground structures	35
10.9	Internal finish schedule for control room building & GIS hall either RCC/PEB	36
10.10	False ceiling details	41
10.11	Water proofing treatment	42
10.12	Specification for plumbing, sanitation & water supply etc.	43

11.0	Material specification for all pre-engineered buildings	48
11.1	Structural Steel Members	48
11.2	Purlins and Girts Member	49
11.3	Roof & wall sheeting	49
11.4	Sheeting fasteners	49
11.5	Sealer	49
11.6	Closures	50
11.7	Flashing and trim	50
11.8	Wall lights	50
11.9	Connections	51
11.10	Gutters and down spouts	51
12.0	Vendors & MQP for PEB buildings	51
13.0	General specification for buildings	52
14.0	External water supply from bore-well to fire water tank/Control building and / or Transit Camp	58
15.0	Submission	58
16.0	Miscellaneous requirements	59
17.0	Interfacing	60
18.0	Statutory rules	60
19.0	Specification for site Levelling	61
20.0	Mode of measurement	71
20.1	Earthwork	71
20.2	Plain cement concrete (PCC)	72
20.3	RCC	73
20.4	Reinforcement steel	73
20.5	Stone filling	73
20.6	Miscellaneous structural steel	73
20.7	Roads	74
20.8	Antiweed treatment	74
20.9	Stone spreading in switchyard	74
20.10	Chain link fencing and gate	75
20.11	Cable trench crossing and road culverts through hume pipe	75
20.12	Buildings	75
20.13	Rain water harvesting	76
20.14	Rail cum road	76
20.15	Septic tank and soak pit	76
20.16	Fire water tank	77
20.17	External water supply from bore well to fire water tank…,	77
20.18	External sewage	77
20.29	Cable trenches	77
20.20	Drains	77
20.21	Soil treatment	78
20.22	Pile foundation	78
20.23	Contractor designed foundation	78
20.24	Billing breakup	78
20.25	Pipe supports and deluge valve housing	78

20.26	Boundary wall	78
20.27	Site levelling	79

P R E F A C E

Salient changes made over previous TS -11

S No.	Ref Clause of Rev. 11A	Brief Description
1	1.1	Mention of "Approval of Employer for design/drawings" Insertion of order of precedence for Technical Specification, BIS code & CPWD specification
2	2.9.2.5	Signing and stamping of soil report by qualified Geotechnical engineer/ consultant
3	3.2.2, 3.4.2, 3.5.1	Layouts to be proposed by the contractor and approved by POWERGRID before execution
4	3.6	Weep holes/ gratings in boundary walls
5	3.6.3.7	"Cage" to be replaced with "design and drawing"
6	5.6 (a)	Supervision and safety of existing structures during dismantling works
7	8.0	Mentioning of IS 456-200 (latest) for RCC works.
8	8.1 & 8.2	Description of minor works for volumetric concreting. Clarity regarding Design mix added.
9	10.2	"Contractor" word added with vendor
10	10.2.6	RCC pedestal to finish at floor level
11	10.2.12	Clarity w.r.t floor finish of GIS hall
12	10.3.18	"working stress method" replaced by "limit state method" for PEB design
13	10.3.16	All design and detailing (including ductile) as per latest BIS standards
14	20.0	Reference of IS 1200 in case of ambiguity.

P R E F A C E

Salient changes made over previous TS -10

S No.	Ref Clause of Rev. 11	Brief Description
1	2.9.2.4 (iv)	Liquefaction related in soil report
2	3.5.1	Provision of pre-cast cable trench
3	3.6	Specification of RCC frame brick masonry wall & stone masonry wall
4	3.6.4	structural steel angle supporting barbed wire/concertina coil over boundary wall shall be painted with epoxy paint
5	4.1, 4.2	"Sand" replaced with "fine aggregate"
6	5.0 &20.1	Excavation in hard rock as separate item
7	5.6	Dismantling and demolishing works
8	8.2.1	Restriction of volumetric mix concrete
9	9.0	Reinforcement steel grade revised to Fe 500D
10	10.1.1	CRB shall be RCC structure at both AIS and GIS substations.
11	10.2.1	Partition sheet for extension works in GIS hall
12	10.2.2	Reference of BIS standard
13	10.3.9	Plinth level raised to 750 mm above FGL.
14	10.3.24	Air pressure maintaining measures.
15	10.7.1	Provision of pre-cast firewall
16	10.9	Aluminium door windows replaced with uPVC sections
17	10.9.1	PU coating over total area of GIS hall
18	10.11.2	Roof treatment through graded concrete.
19	10.12.7	Provision of "triple layered" polyethylene water storage tank
20	11.3.2	Min. value of Zn-Al coating in roof and wall sheeting changed to 150 gm/sqm
21	13.22	Provision of Seamless galvalume rolling shutter
22	20.12.2 & 20.12.3	Payment of miscellaneous structural steel for GIS equipment in GIS hall

SECTION: CIVIL WORKS

1.0 GENERAL

1.1 All civil works shall be carried out as per design/drawings provided by the Employer/ Contractor and as per these specification provided by the Employer. *In case design/drawings are prepared by the contractor then these shall be approved by the employer before execution.* In case any item is not covered under specification then the same shall be carried out as per CPWD specification /applicable BIS Standards and Codes. Any item for which specification is not provided herein and is not covered under CPWD specification/ BIS Standards, the same shall be executed as per manufacturer guidelines with the approval of employer. All materials shall be of best quality conforming to relevant Indian Standards and Codes. In case of any conflict between Standards/ Code and Technical Specification, *the order of precedence shall be as under:*

1.1.1 Technical specification,

1.1.2 BIS codes

1.1.3 CPWD specification.

The decision of engineer in charge in this regard shall be final and binding.

1.2 Wherever reference to CPWD/BIS Codes is made, it shall be to the latest edition/revision of the same, issued up to 7 days prior to the date of opening of this tender.

1.3 The Contractor shall arrange all labour, tools, equipment, materials, temporary works, constructional plant & machinery, fuel supply, transportation and all other incidental items not shown or specified but as may be required for complete performance of the Works in accordance with drawings, specifications and direction of Employer.

1.4 All materials including cement, reinforcement steel, structural steel etc. shall be arranged by the Contractor.

1.5 The Contractor shall execute the work as per the Field Quality Plan (FQP) which is available on POWERGRID website. All testing required shall be arranged by the Contractor at his own cost.

1.6 The bidder shall fully apprise himself of the prevailing conditions at the proposed site, Climatic conditions including monsoon patterns, local conditions and site specific parameters, soil parameters, availability of construction material and shall include for all such conditions and contingent measures in the bid, including those which may not have been specifically brought out in the specifications.

1.7 Unless leveling is in the scope of the bidder, fairly leveled site with single level/terraces with different levels/ gradual slope shall be handed over to the Contractor, in a phased

manner. The finished ground level (FGL) with a tolerance of (+/-) 100mm shall be decided by the Employer. The layout and levels of all structure etc shall be made by the Contractor at his own cost from the general grids of the plot and benchmarks set by the Contractor and approved by the Employer. The Contractor shall provide all assistance in instruments, materials and personnel to the Employer for checking the detailed layout and shall be solely responsible for the correctness of the layout and levels.

In case leveling is in the scope of bidder, FGL shall be decided by the employer.

1.8 Employer has standardized its technical specification for various items/ works. Specification for items which are covered in the scope and as defined in Section project & BPS shall only be referred.

1.9 The material specification, workmanship and acceptance criteria shall be as per approved standard Field Quality Plan. In case certain item is not covered in FQP, it shall be constructed as per CPWD specification/ relevant BIS.

~~2.0 GEOTECHNICAL INVESTIGATION:~~

NOT APPLICABLE

The Contractor shall perform a detailed soil investigation to arrive at sufficiently accurate conclusion regarding general as well as specific information about the soil profile and the necessary soil parameters of the site, in order to design and construct the foundation of the various structures safely and rationally.

A report to the effect shall be submitted by the Contractor for Employer's specific approval giving details regarding data proposed to be utilized for the design.

2.1 SCOPE:

This specification covers all the work required for detailed soil investigation and preparation of a detailed report. The work shall include mobilization of necessary equipment, providing necessary engineering supervision and technical personnel, skilled and unskilled labour etc. as required to carry out field investigation as well as, laboratory investigation, analysis and interpretation of data and results, preparation of detailed Geo-technical report including specific recommendations for the type of foundations and the allowable safe bearing capacity for different sizes of foundations at different founding strata starting from 0.5M from existing ground level for the various structures of the substation. The Contractor shall make his own arrangement for locating the co-ordinates and various test positions in field as per the information supplied to him and also for determining the reduced level of these locations with respect to the benchmark indicated by the Employer.

2.2 BORE HOLES:

- Bore holes of 150 mm diameter in accordance with the provisions of IS: 1892 at the rate of minimum one number bore hole per hectare up to 15meter depth into virgin soil or to refusal whichever occurs earlier shall be drilled. Total area of substation plot (including of Switchyard, Township and Future area) shall be considered for arriving at number of bore holes to be drilled. In any case number of boreholes shall not be less than five and shall not exceed twenty. By refusal it shall mean that a standard penetration blow count (N) of 100 is recorded for 30 cm penetration. In case rock is encountered within five meter from existing ground level, coring in all the boreholes shall be carried out up to 3 meter in rock.
- The Contractor shall carry out Standard Penetration Tests at approximately 1.5 m interval in the borehole starting from 0.5 m below ground level onwards and at every change of stratum. The disturbed samples from the standard penetrometer shall also be collected for necessary tests.
- The Contractor shall collect undisturbed samples of 100/75 mm diameter 450 mm long from the bore holes at intervals of 2.5 m and every change of stratum starting from 0.5 m below ground level onwards in clayey strata.
- The depth of Water Table, if encountered, shall be recorded in each borehole. In case the soil investigation is carried out in winter/summer, the water table for rainy season shall be collected from reliable sources and recorded in the report.
- All samples, both disturbed and undisturbed, shall be identified properly with the borehole number and depth from which they have been taken.
- The sample shall be sealed at both ends of the sampling tubes with wax immediately after the sampling and shall be packed properly and transported to the laboratory without any damage or loss.
- The logging of the boreholes shall be compiled immediately after the boring is completed and a copy of the bore log shall be handed over to the Engineer-in-charge.

2.3 TRIAL PITS:

Trial pits shall be carried out at minimum one location per hectare as directed by the Employer. In case hard rock is encountered in trial pit, test need not be carried out. Total area of substation plot (including of Switchyard, Township and Future area) shall be considered for arriving at number of Trial Pit to be excavated. Minimum number of trial pits shall be five and maximum number shall be ten. The trial pits shall be 2 m x 2 m in size extending to 4 m depths, or as specified by the Employer. Undisturbed samples shall be taken from the trial pits as per the direction of the Employer.

2.4 ELECTRICAL RESISTIVITY TEST :

The resistivity of earth varies over a wide range depending on its moisture content, temperature, salt content and compactness. Therefore earth resistivity test shall be conducted preferably during the dry season in order to get conservative results.

2.4.1 TEST LOCATION

In the evaluation of earth resistivity for the substations, at least eight test directions shall be chosen from the centre of the substation to cover the entire area including the future area. The number of test points shall be as per approved drawing.

2.4.2 PRINCIPLE OF TEST

Wenner's four electrode method shall be used. In this method, four small electrodes shall be buried in four small holes in the earth along a straight line at equal intervals. A test current (I) by earth resistivity tester shall be passed between two outer electrodes and the voltage difference (V) between the two inner electrodes shall be measured. The test current (I) thus flowing into the earth, produces an electric field proportional to its density and to the resistivity of the soil. The voltage (V) measured between the inner electrodes is proportional to the field. Consequently, the resistivity will be proportional to the ratio of the voltage to current. Thus the resistivity shall be calculated from the following equation.

$$\rho_a = \frac{4\pi aR}{1 + \frac{2a}{\sqrt{(a^2+4b^2)}} - \frac{a}{\sqrt{(a^2+b^2)}}}$$

Where,

ρ_a is the apparent resistivity of the soil in Ω-m

R is the measured resistance in Ω

a is the distance between adjacent electrodes in metres

b is the depth of the electrodes in m

2.4.3 TEST PROCEDURE

In the selected test point and chosen direction, four electrodes with insulated connecting wires shall be driven into the earth along a straight line of equal intervals (a). The depth of the electrodes in the earth shall be of the order of 15 cm to 20 cm. The megger shall be placed on a steady and approximately level base, the link between terminals P1 and C1 shall be opened and the four electrodes connected to the instrument terminals. An appropriate range on the instrument shall be selected to obtain clear readings avoiding the two ends of the scale as far as possible.

Resistivity shall be calculated by substituting the value of R in the above equation. The test shall be repeated in a chosen direction with a number of different electrode spacing, increasing from 2m to 50m preferably in the steps of 2, 5, 10, 15, 25 and 50m. When the spacing is increased gradually from low values, at a stage, it may be found that the resistivity reading is more or less constant irrespective of the increase in the electrode spacing. The resistivity for this spacing is noted and taken as the resistivity for that direction. In a similar manner, resistivity for at least eight equally spaced directions from the centre of the test points shall be measured. These measurements shall be repeated for all test points.

NOTES:-

i. Soil resistivity points shall preferably be one number in each 100mx100m grid and number of test points shall be such that the entire substation including the future area is covered.
ii. Average resistivity value of all eight directions shall be considered for design of earthing system.
iii. Soil resistivity measurement may be done in dry season. Small amount of water may be applied at electrodes for making proper contact between the electrodes and soil.

2.5 PLATE LOAD TEST

Plate load test shall be conducted to determine the bearing capacity, modulus of sub grade reaction and load/settlement characteristics of soil at shallow depths by loading a plane and level steel plate kept at the desired depth and measuring the settlement under different loads, until a desired settlement takes place or failure occurs. The specification for the equipment and accessories required for conducting the test, the test procedure, field observations and reporting of results shall conform to IS: 1888. Modulus of sub grade reaction shall be conducted as per IS: 9214. Plate load test shall be conducted at two locations to be decided during detailed engineering at the proposed foundation depth below finished ground level for determining the bearing capacity.

Undisturbed tube samples shall be collected at 0.5 m and 2.5m depths from natural ground level for carrying out laboratory tests

The size of the pit in plate load test shall not be less than five times the plate size and shall be taken up to the specified depth. All provisions regarding excavation and visual examination of pit shall apply here.

Unless otherwise specified the reaction method of loading shall be adopted. Settlement shall be recorded from dial gauges placed at four diametrically opposite ends of the test plate.

The load shall be increased in stages. Under each loading stage, record of Time v/s Settlement shall be kept as specified in IS: 1888.

Backfilling of the pit shall be carried out as per the directions of the Employer. Unless otherwise specified the excavated soil shall be used for this purpose. In cases of gravel-boulder or rocky strata, respective relevant codes shall be followed for tests.

2.6 WATER SAMPLE

Representative samples of ground water shall be taken when ground water is first encountered before the addition of water to aid drilling of boreholes. The samples shall be of sufficient quantity for chemical analysis to be carried out and shall be stored in air- tight containers.

2.7 BACK FILLING OF BORE HOLES

On completion of each hole, the Contractor shall backfill all bore holes as directed by the Employer. The backfill material can be the excavated material.

2.8 LABORATORY TEST

2.8.1. The laboratory tests shall be carried out progressively during the field work after sufficient number of samples has reached the laboratory in order that the test results of the initial bore holes can be made use of in planning the later stages of the field investigation and quantum of laboratory tests.

2.8.2. All samples brought from field, whether disturbed or undisturbed shall be extracted/prepared and examined by competent technical personnel, and the test shall be carried out as per the procedures laid down in the relevant I.S. Codes.

The following laboratory tests shall be carried out

i) Visual and Engineering Classification
ii) Liquid limit, plastic limit and shrinkage limit for C-Ø soils.
iii) Natural moisture content, bulk density and specific gravity.
iv) Grain size distribution.
v) Swell pressure and free swell index determination.
vi) California bearing ratio.
vii) Consolidated drained test with pore pressure measurement.
viii) Chemical tests on soil and water to determine the carbonates, sulphates, nitrates, chlorides, Ph value, and organic matter and any other chemical harmful to the concrete foundation.
ix) In case of rock samples following tests shall also be conducted:
    - Rock quality designation (RQD), RMR.
    - UCC test.
    - Point load index test.

2.9 TEST RESULTS AND REPORTS

2.9.1 The Contractor shall submit the detailed report in four (4) copies wherein information regarding the geological detail of the site, summarised observations and test data, bore logs, and conclusions and recommendations on the type of foundations with supporting calculations for the recommendations. Initially the Contractor shall submit

draft report and after the draft report is approved, the final report in four (4) copies shall be submitted. The site test data shall bear the signatures of the Investigation Agency, Vendor and also site representative of Employer.

2.9.2 The report shall include, but not limited to the following:-

2.9.2.1 A plan showing the locations of the exploration work i.e. bore holes, trial pits, Plate load test etc.

2.9.2.2 Bore Logs: Bore logs of each bore holes clearly identifying the stratification and the type of soil stratum with depth. The values of Standard Penetration Test (SPT) at the depths where the tests were conducted on the samples collected at various depths shall be clearly shown against that particular stratum.

2.9.2.3 Test results of field and laboratory tests shall be summarized strata wise as well a s in combined tabular form. All relevant graphs, charts tables, diagrams and photographs, if any, shall be submitted along with report. Sample illustrative reference calculations for settlement, bearing capacity, pile capacity shall be enclosed.

2.9.2.4 The report should contain specific recommendations for the type of foundation for the various structures envisaged at site. The Contractor shall acquaint himself about the type of structures and their functions from the Employer. The observations and recommendations shall include but not limited to the following:

i) Geological formation of the area, past observations or historical data, if available, for the area and for the structures in the nearby area, fluctuations of water table etc.
ii) Recommended type of foundations for various structures. If piles are recommended the type, size and capacity of pile and groups of piles shall be given after comparing different types and sizes of piles and pile groups.
iii) Allowable bearing pressure on the soil at various depths for different sizes of the foundations based on shear strength and settlement characteristics of soil with supporting calculations. Minimum factor of safety for calculating net safe bearing capacity shall be taken as 2.5.
iv) Recommendation regarding liquefaction potential/characteristics of soil during ground shaking and possible remedies shall be provided.
v) Recommendations regarding slope of excavations and dewatering schemes, if required.
vi) Comments on the Chemical nature of soil and ground water with due regard to deleterious effects of the same on concrete and steel and recommendations for protective measures.
vii) If expansive soil is met with, recommendations on removal or detainment of the

same under the structure, road, drains, etc. shall be given. In the latter case detailed specification of any special treatment required including specification or materials to be used, construction method, equipments to be deployed etc. shall be furnished. Illustrative diagram of a symbolic foundation showing details shall be furnished.

viii) Recommendations for additional investigations beyond the scope of the present work, if considered such investigation as necessary.

ix) In case of foundation in rocky strata, type of foundation and recommendation regarding rock anchoring etc. should also be given based on RMR value

2.9.2.5 All Geotechnical investigation reports must be signed and stamped by qualified Geotechnical engineer/ consultant even if they have been prepared by NABL accredited test labs.

3.0 STANDARD DRAWINGS:

i) Standard drawings have been developed for Control Room Building, Switchyard Panel Room, Fire Fighting Pump House & Water Tank, Towers & Equipments Foundations, Transit Camp, Septic Tank & Soak Pit, Roads, Road Culverts & Rail Cum Road, Drains, Chain Link Fence & Switchyard Gate, Rain Water Harvesting by the Employer and are enclosed with the tender documents.

ii) These drawings are good for construction and are also available on POWERGRID website. Additional prints if any required, can be downloaded from the website.

iii) All tender drawings shall be read in conjunction with this specification. Discrepancy if any shall be brought to the notice of Employer prior to quote.

iv) All foundation drawings including foundations for buildings, towers, equipments etc shall be released to the Contractor after award in a phased manner, after receiving the geotechnical investigation report.

v) Drawings for transformer, reactor foundations and fire walls are not enclosed and shall be made available to the successful bidders by the Employer during detailed engineering.

vi) In case the site conditions warrant any special type of foundations to be used, the same shall be designed and issued by the Employer to the Contractor during detailed engineering unless otherwise mentioned in section project.

vii) Drawings for any non-standard tower or equipment and their foundation, if required, shall be designed by the Employer and made available to the Contractor during detailed Engineering unless otherwise mentioned in section project.

viii) Drawings that have been mentioned and to be issued by the Employer to the Contractor during detailed Engineering shall be made available to the Contractor as per the agreed work schedule finalized after award.

ix) Items/ components of buildings not explicitly covered in the specification but required for completion of the project shall be deemed to be included in the scope.

3.1 ROADS, ROAD CULVERTS AND RAIL CUM ROAD:

3.1.1 The construction drawings showing section detail for road, culverts as well as rail cum road are enclosed with the tender documents. The layout of roads shall be as per approved general arrangement drawing. Types of the roads in the scope of contract shall be either of RCC or bituminous road as indicated in the GA drawing or in Bid Price Schedule.

3.1.2 The width of the road shall be either 5.5m wide or 3.75m as indicated in the GA drawing. Type of pavement either rigid pavement (RCC Road) or flexible pavement(Bituminous Road) shall be as per tender documents.

3.1.3 The type & location of culverts i.e. the number and diameter of Hume pipes shall be as decided during detailed engineering. The invert level of Hume pipes of culverts shall match with the invert level of drain meeting the culvert.

3.1.4 100mm diameter RCC Hume pipe (NP-3) shall be provided across the road at every 100M interval along the road. In case NP3 pipe is not available, vendor may provide 100 dia UPVC pipe encased with 75 mm thk. concrete 1:2:4 alround without any financial implication to POWERGRID.

3.1.5 Road within the switchyard area should have shoulder of 600mm wide on either sides of road. Shoulder shall be smooth finished with well compacted 75mm thick PCC 1:4:8. The road leading to control room building and the roads outside switchyard fence area shall be provided with kerb stone and interlocking tiles on shoulder. Width of shoulder shall be 1.75m in case of 5.5m wide road and 1.3m in case of 3.75m wide road.

3.1.6 The shoulder of the road in case of substation extension shall match with the shoulder of the existing road in all respect.

3.1.7 Road leading towards the area of Autotransformer/Reactor shall be as short as possible. Road layouts shall be prepared with adequate turning radius, so that easy movement of vehicles is possible. Roads which are to be used for carrying transformers / reactors shall be provided with turning radius preferably 19.5M or more but not less than 16.5M. Turning radius of other roads may be decided at site depending on layout constraints

3.1.8 Contractor may use WMM instead of WBM with prior approval of employer without any additional financial implication to POWERGRID. Guidelines of IRC: 109-1997 shall be followed for Wet Mix Macadam (WMM) only. However, measurement of road shall be done as specified elsewhere in this specification.

3.1.9 In case of rigid pavements, RCC shall be laid and finished with screed board, vibration, vacuum dewatering process etc.

3.2 DRAINS:

3.2.1 The construction drawing for the section of drain is enclosed with the tender documents.

3.2.2 The Contractor shall *propose* an overall drainage layout for the new sub-station or extension of substation during detailed engineering considering the site conditions *which is to be approved by POWERGRID before execution*. The type of drains used shall be of the sections standardized and indicated in the drawings enclosed with the tender documents.

3.3 CHAIN LINK FENCING AND SWITCHYARD GATE:

3.3.1 Fencing and Gate shall be constructed as per drawing attached with tender documents and are also available on POWERGRID website.

3.3.2 Fencing and Gate shall be provided at the locations shown in approved general arrangement drawing. Separate gate shall be provided for men and equipment. Fence shall also be provided for the various equipments (if) mounted on ground or a height lower than 2.5m. Necessary gates shall be provided for each area so surrounded.

3.3.3 Chain link of galvanized fence fabric with 3.15mm dia wire and 75mm mesh size conforming to IS: 2721 shall be used. MS tube used shall be of grade YST210 and conform to IS: 1161. All other structural steel shall conform to IS: 2062.

3.3.4 The whole assembly of tubular post and frame of panels shall be hot dip galvanized. The zinc coating shall be minimum 610 gram per square meter. In case the substation is located within 30km from sea coast, the zinc coating shall be 900gm per square meter. The purity of zinc shall be 99.95% as per IS: 209.

3.3.5 The gate shall be made of medium duty M.S. pipe of grade YST210 and conform to IS: 1161 with welded joints. The main frame (outer frame) of the gate shall be made of 40mm nominal bore pipe and vertical pipes of 15mm nominal bore @ 125mm spacing (maximum) shall be welded with the main frame. Gate shall be painted with one coat of approved steel primmer and two or more coats of synthetic enamel paint to give an even shade.

~~3.4 RAIN WATER HARVESTING:~~

3.4.1 In addition to drainage of rainwater, the Contractor shall make arrangement for rainwater harvesting also. A drawing showing details of recharge structure for rainwater harvesting is enclosed with tender document and is also available on POWERGRID website.

3.4.2 Rainwater harvesting shall be done by providing recharge structures with bore wells. The *contractor shall propose location of* recharge structures within the sub-station considering the site conditions *which is to be approved by POWERGRID before execution*. Branch drains from the main drain carrying rainwater from entire switchyard shall be connected to the recharge structures.

3.5 CABLE TRENCHES:

3.5.1 The construction drawings of cable trenches, cable trench crossing road and sump are enclosed with tender documents. The construction of cable trenches shall be cast in situ type or pre cast RCC as per drawings and meeting the technical specification. The Contractor shall *propose* an overall cable trench layout for the substation during detailed engineering *which is to be approved by POWERGRID before execution.*

3.5.2 The layout should show type of cable trench, longitudinal slope and invert level calculated considering future extensions also. The types of cable trench shall be of the section indicated in the drawings enclosed with the tender documents and are also available on POWERGRID website.

~~3.6 BOUNDARY WALL~~ NAT APPLICABLE

Boundary wall shall be brick masonry wall with RCC frame or Stone masonry wall or Pre cast RCC wall. The construction drawing of the boundary wall applicable is enclosed with tender document. *All walls shall have adequate weep holes/ gratings as per drawing/ as per site conditions for the drainage of water*. The layout shall be as per approved layout drawing during detail engineering.

3.6.1 Brick masonry wall with RCC frame:

Boundary wall shall consist of frame of RCC column and foundation at regular intervals connected through plinth beam and supporting 230 thick brick masonry. Details such as height, column spacing, structural details, fencing/grating works, plastering/ painting, etc. shall be as per tender/construction drawing.

3.6.2 Stone masonry wall:

Boundary wall shall be Random Rubble masonry wall and coursed rubble masonry (for front portion). The wall thickness shall be 350 thk and foundation, height, fencing shall be as per tender/construction drawing.

3.6.3 Pre cast boundary wall:

3.6.3.1 Pre-cast reinforced concrete units such as columns, posts, wall panels etc. shall be of grade M-25 Design Mix. Mix design concrete should be well proportioned, mixed, placed and thoroughly compacted by mechanical/platform/form vibrators to give a dense concrete free from voids and honey combing. Fly ash conforming to grade-I of IS: 3812 (Part-1) may be used as part replacement of OPC as per IS: 456. Uniform blending with cement to be

ensured in accordance with clauses 5.2 and 5.2.1 of IS: 456 -2000. Admixtures may be used with the approval of the engineer-in-charge. However use of any admixture containing chlorides in any form is prohibited. No admixtures shall be accepted for use in concrete unless these are tested in accordance with IS: 9103 and the test results are approved by the Engineer-in-Charge.

3.6.3.2 The forms/ moulds shall be of fiber glass or of steel sections for better finish. Provision shall be made in the forms and moulds to accommodate fixing devices such as angle for concertina coils, hooks and forming of notches and holes.

3.6.3.3 The contractor may pre-cast the units on cement or steel platform which shall be adequately oiled provided the surface finish is of the same standard as obtained in form. Each unit shall be cast in one operation.

3.6.3.4 Pre-cast articles shall have a dense surface finish showing no coarse aggregate and shall not have cracks or crevices likely to assist in disintegration of concrete or rusting of steel or other defects that would interfere with the proper placing of the units. All angles of the pre-cast units with the exception of the angles resulting from the splayed or chamfered faces shall be true right angles. Arises shall be clean and sharp except those specified or shown to be rounded. Gaps if any noticed during installation shall be finished with 1:3cement Mortar. The wearing surface shall be true to the lines. On being fractured, the interior of the units should present a clean homogeneous appearance.

3.6.3.5 The pre-cast articles shall be matured for 28 days before erection or being built in so that the concrete shall have sufficient strength to prevent damage to units when first handled. Date of casting shall be marked on the surface which should not be visible after installation.

3.6.3.6 The exposed surfaces of walls & columns shall be painted with water proofing cement paint of approved shade to give an even shade as per BOQ item.

3.6.3.7 Reinforcement *as per approved design drawing* shall be placed inside the mould in such a way as to fulfill the minimum cover requirement or as per the drawing. Concrete shall then be poured in middle and the sides and compacted with a plate vibrator (platform/table/surface vibrator).

3.6.3.8 Each Pre-cast unit shall have marking like; date of manufacturing and identification number. Units without marking shall not be accepted.

3.6.3.9 The mould sizes shall satisfy the following dimensional tolerances:

S.No.	DIMENSION	TOLERANCE
1	Length	±4 mm
2	Width	±2 mm

3	Depth	±2 mm

3.6.3.10 Contractor shall make his own arrangement for curing by making suitable size pond for curing as directed by Engineer-in-charge. After having been cast in the mould or form the concrete shall be adequately protected during setting in the first stages of hardening from shocks and from harmful effects of frost, sunshine, drying winds and cold. The concrete shall be cured at least for 7 days from the date of placing of concrete in case of OPC and at least 10 days where mineral admixtures or blended cements are used. In hot & arid regions, the minimum curing period shall be 14 days.

OR

Pre-cast units shall be stacked against a vertical support in nearly vertical position and cured for at least two weeks by sprinkling water. If necessary, low pressure steam curing may be employed. It shall further be air cured for another two weeks before it can be used for construction. During initial stages of hardening, the Pre-cast units shall be adequately protected from shocks as well as harmful effects of frost, sunshine, drying winds and cold.

3.6.3.11 SAMPLING

- All Pre-cast units (viz. planks and columns) of the same size, manufactured from similar materials and under similar conditions of production shall be grouped together to constitute a lot.
- Five units shall be selected at random out of a lot consisting of 300 units or less. For lots bigger than 300 units, 5 units shall be selected for every additional 300 units or part thereof.
- The units shall be selected from the lot at random. In order to ensure randomness of selection, procedure given in IS: 4905-1968 may be followed. The sampling procedure may be modified, if the Engineer-In-Charge desires so.

3.6.3.13 DIMENSIONAL TOLERANCES

Pre-cast units manufactured in accordance with the drawings/specifications shall be required to satisfy following dimensional tolerances:

S.No.	DIMENSION	TOLERANCE
1	Length	±5 mm
2	Width	±3 mm
3	Thickness	±2 mm
4	Bow (Deviation from intended line or plane)	±2 mm

5	Twist (Distance of any corner from the plane containing other three corners)	1 mm

If four out of the five samples satisfy the shape (as per the drawing) and dimensional requirements as tabulated above, the lot represented by the sample shall be deemed to have passed the dimensional requirements.

3.6.3.14 HANDLING, STORAGE AND DELIVERY

- Pre-cast units shall be stored, transported and placed in position in such as manner that they will not be overstressed or damaged.
- Pre-cast units shall be transported to the site by suitable means as approved by the Engineer-In-Charge. Care shall be taken to ensure that no damage occurs during transportation.
- In case the units are to be transported in trolleys, the overhang of the units from the trolley shall not be more than one-fifth of length of the Pre-cast unit.
- For lifting/handling the units, rope slings shall be used at locations where lifting hooks have been provided. The units shall be lifted manually or with the help of chain pulley blocks or mechanically with a hoist or a crane. The Pre-cast units shall be handled and transported in nearly vertical position as far as possible and these should be supported only near the edges.
- Any defect/breakage arising during transportation, due to mishandling or due to faulty storage practice shall be the sole responsibility of the Manufacturer/Supplier/Agency.

3.6.3.15 ERECTION

- Precast concrete columns and wall panel shall be placed in truly vertical position with the aid of a compatible light crane/manually/by suitable means.
- For erection, panels are handled by means of lifting devices/manually to set into columns wedge. Panels may be carefully placed in successive horizontal position by means of temporary wooden wedges placed at the junction of the two adjacent panels during construction and which shall be removed after proper placement of panels.
- After placement of wall panels, gaps if any between the wall panels shall be filled with 1:3 cement mortar and shall b finished before taking up of painting. No extra payment shall be made for filling of joints with cement mortar.
- Pre-cast units shall be erected in such a manner that no part is overstressed or damaged due to faulty erection.
- Any defect/breakage occurred during erection shall be the sole responsibility of the Agency/Manufacturer/Supplier and such units shall not be accepted for use in construction.

3.6.3.16 MISCELLANEOUS

The work to be performed under this specification shall include providing all labour, supervision, materials, storages, inventories, all enabling works like scaffolding, watch and ward for the works, power, fuel, construction equipment, water, tools and plants, transportation, all taxes and duties, all labour welfare and safety measures, complete and

all other incidental items not shown or specified, but reasonably implied or necessary for successful completion of the work including Contractor's supervision and in strict accordance with the drawings and specifications, inspection and testing standards and field quality control and testing as given in the tender documents and the complete execution of the works.

Any technical clarifications required regarding the drawings/specifications during the progress of works shall be obtained from the Engineer-in-Charge.

Employer reserves the right to inspect all the material before dispatch.

3.6.4 All structural steel angle for supporting barbed wire/concertina coil shall be painted with epoxy paint of approved brand and colour shade.

~~4.0 STONE SPREADING AND ANTI-WEED TREATMENT~~

NOT APPLICABLE

4.1 The layout of the area, where anti-weed treatment and stone spreading is to be done, shall be developed by the Contractor during detailed engineering and the same shall be submitted to the employer for approval. The Contractor shall arrange all labour, equipment and materials required for complete performance of the work in accordance with the drawings, specification and direction of the Employer.

4.2 Stone spreading over cement concrete layer shall be done in the areas of the switchyard under present scope of work. The cement concrete layer shall also be provided in future areas within the fenced area. However the stone spreading in future areas shall be provided in case step potential without stone layer is not well within safe limits.

4.3 The material required for site surfacing/stone filling shall be free from all types of organic materials and shall be of standard quality, and as approved by the Employer.

4.4 The material to be used for stone filling/site surfacing shall be stone aggregate of 40mm nominal size (ungraded single size) conforming to Table 2 of IS:383 – 1970. Hardness, flakiness shall be as required for wearing courses are given below:

i) Sieve Analysis limits (Gradation) (IS : 383 – Table – 2)

Sieve Size	% passing by weight
63mm	100
40mm	85-100
20mm	0-20
10mm	0-5

ii) Hardness : Abrasion value (IS:2386 Part-IV) – not more than 40% Impact value (IS: 2386 Part-IV) – not more than 30%.

iii) Flakiness Index : As per IS: 2386 Part – I maximum value is 25%.

iv) Frequency of test shall be conducted for sieve analysis, Hardness & Flakiness index as per latest SFQP available on POWERGRID website.

4.5 After all the structures/equipments are erected, antiweed treatment shall be applied in the switchyard where ever cement concrete is to be done and the area shall be thoroughly de-weeded including removal of roots. The recommendation of local agriculture or horticulture department may be sought where ever feasible while choosing the type of chemical to be used.

4.6 The antiweed chemical shall be procured from reputed manufacturers. The doses and application of chemical shall be strictly done as per manufacturer's recommendation. Nevertheless the effectiveness of the chemical shall be demonstrated by the Contractor in a test area of 10MX10M (appx) and shall be sprinkled with water at least once in the afternoon every day after forty eight hours of application of chemical. The treated area shall be monitored over a period of two to three weeks for any growth of weeds by the Engineer – in- charge. The final approval shall be given by Engineer – in –charge based on the results.

4.7 Engineer-in-charge shall decide final formation level so as to ensure that the site appears uniform devoid of undulations. The final formation level shall however be very close to the formation level indicated in the approved drawing.

4.8 After antiweed treatment is complete, the surface of the switchyard area shall be maintained, rolled/compacted to the lines and grades as decided by Engineer-in-charge. The sub grade shall be consolidated by using half ton roller/surface vibrator with suitable water sprinkling arrangement to form a smooth and compact surface. The roller shall run over the sub grade till the soil is evenly and densely consolidated and behaves as an elastic mass.

4.9 In areas that are considered by the Engineer-in-Charge to be too congested with foundations and structures for proper rolling of the site surfacing material by normal rolling equipments, the material shall be compacted by hand rammer, if necessary. Due care shall be exercised so as not to damage any foundation structures or equipment during rolling / compaction.

4.10 The sub grade shall be in moist condition at the time the cement concrete is placed. If necessary, it should be saturated with water for not less than 6 hours but not exceeding 20 hours before placing of cement concrete. If it becomes dry prior to the actual placing of cement concrete, it shall be sprinkled with water and it shall be ensured that no pools of water or soft patches are formed on the surface.

4.11 Over the prepared sub grade, 75mm thick base layer of cement concrete in 1:5:10 (1 cement: 5 fine aggregate: 10 burnt brick aggregate 40mm nominal size) shall be provided

in the area excluding roads, drains, cable trenches as per detailed engineering drawing. The Contractor shall have option to use graded stone aggregate 40mm nominal size in place of brick aggregate without any extra cost to employer. For easy drainage of water, the slope of 1:1000 is to be provided from the ridge to the nearest drain.

4.12 The ridge shall be suitably located at the centre of the area between the nearest drains. The above slope shall be provided at the top of base layer of cement concrete in 1:5:10. A layer of cement slurry of mix 1:6 (1cement: 6 fine aggregate) shall be laid uniformly over cement concrete layer. The cement consumption for cement slurry shall not be less than 150 kg for every 100 sq.m.

4.13 A final layer of 100mm thickness of stone aggregate of 40mm nominal size (conforming to clause 5.2.1) shall be spread uniformly over cement concrete layer after curing is complete.

5.0 EXCAVATION AND BACKFILL OF FOUNDATIONS:

Excavation for foundations shall be in accordance with CPWD Specification/ the relevant BIS code. Excavation shall include removal of all materials of whatever nature at all depth and whether wet or dry necessary for the construction of foundations. The bottom of excavation shall be leveled both longitudinally and transversely unless otherwise mentioned in the drawings or as directed by Engineer-in-charge. Excavation shall be measured as classified under:-

a) Excavation in all kind of soil including soft/ disintegrated rock, PCC, WBM, Brickwork/ stone masonry etc (excluding hard rock).

b) Excavation in hard rock (required blasting)

5.1 If required the sides of excavations should be supported in such a way as is necessary to secure these from falling in, and the shoring, if required, shall be provided and maintained in position as long as necessary. No extra payment shall be made for shoring.

5.2 Whenever water table is met during the excavation, it shall be dewatered and water table shall be maintained below the bottom of the excavation level during excavation, The excavation shall be kept free from water:-

- When concrete and/or masonry works are in progress and till they come above the natural water level
- Till the Employer considers that the concrete/ mortar is sufficiently set.

No extra payment shall be made for dewatering.

5.3 Material unsuitable for foundations shall be removed and replaced by suitable fill material as per specification and to be approved by the Employer.

5.4 Backfill material around foundations or other works shall be suitable for the purpose for which it is used and compacted. Requirements regarding density / tests of backfilled earth shall be as specified in Field Quality Plan. The sub-grade for the roads and embankment filling shall be compacted to minimum 95% of the Standard Proctor's density at OMC (optimum moisture content). Cohesion less material sub-grade shall be compacted to 70% relative density (minimum).

5.5 If, excavated material is not suitable or not required for backfill, it shall be disposed off in areas as directed by Employer up to a maximum lead of 2 km from the substation boundary.

5.6 DISMANTLING & DEMOLISHING WORKS

a. The scope of work includes dismantling of existing R.C.C. works at all levels (in foundations or super structures) either manually or by mechanical means including disposal of steel bars and unserviceable material as per direction of Engineer – in-charge. The work of dismantling of RCC works shall be measured in cu. m. *Dismantling work must be carried out very carefully under strict close supervision to ensure structural stability of the remaining and/or adjoining/ abutting structure.*

b. The scope of work includes Demolishing/dismantling of existing chain link fencing either manually or by mechanical means including disposal of unserviceable material as per direction of Engineer – in-charge. The work of dismantling/demolishing of existing chain link fencing shall be measured in running meter.

5.7 REQUIREMENT FOR FILL MATERIAL UNDER FOUNDATION:

5.7.1 The thickness of fill material under the foundations shall be such that the maximum pressure from the footing, transferred through the fill material and distributed onto the original undisturbed soil will not exceed the allowable soil bearing pressure of the original undisturbed soil.

5.7.2 The filling shall be done in accordance with clause 4.10 of IS: 1080. For expansive soils the fill materials and other protections etc. to be used under the foundation is to be got approved by the Employer.

5.7.3 Cohesive Non Swelling (CNS) soil, if required, for filling under / around the foundations, cable trenches, drains, roads etc shall confirm to IS: 9451: 1994 reaffirmed 2004

6.0 CEMENT:

6.1 The type of cements which can be used are Portland Pozzolana cement (conforming to IS:1489), Ordinary Portland cement (conforming to IS:269 or IS:8112 or IS:12269), and Portland Slag cement. (Conforming to IS: 455). Cement shall be arranged by contractor.

6.2 Generally PPC type shall be used for concrete work. However depending on availability, OPC may also be used without any additional financial implication to POWERGRID.

6.3 Extra care for curing shall be taken for concrete made with OPC 53 grade & PPC.

6.4 Extra care for removing form work shall be taken, when PPC is used.

6.5 Portland Slag Cement has low heat of hydration and is relatively better resistant to soils and water containing excessive amount of sulphates of alkali metals, alumina and iron, as well as to acidic waters. Hence it can be specifically allowed for above conditions with prior approval of EIC.

7.0 CHEMICAL ADMIXTURES & ADDITIVES

7.1 Use of chemical admixtures shall be permitted in accordance, with the provisions of IS 456 and IS 9103.

7.2 It shall be the responsibility of the producer to establish compatibility and suitability of any admixture with the other ingredients of the mix and to determine the dosage required to give the desired effect. The amount of admixture added to mix shall be recorded in the production record by the producer.

7.3 Admixtures should be stored in a manner that prevents degradation of the product and consumed within the time period indicated by the admixture supplier. Any vessel containing an admixture in the plant or taken to site by the producer shall be clearly marked as to its content.

7.4 When offering or delivering a mix to a purchaser it should be indicated if such a mix contains an admixture or combination of admixtures or not. The admixtures may be identified generically and should be declared on the delivery ticket.

8.0 REINFORCED CONCRETE CEMENT (RCC):

All RCC work including material properties, proportioning, batching, mixing, transporting, pouring, compacting, finishing, curing, sampling, testing, acceptance criterion etc. shall be as per IS : 456-2000 (or latest)

8.1 DESIGN MIX CONCRETE

8.1.1 For new substations and extensions *except minor works*, Reinforced cement concrete shall be M-25 design mix conforming to IS: 456. IS: 10262 shall be followed for mix

proportioning. *The minor work may be defined as any work involving less than 3.0 cum of concrete in a single day of concreting at one particular construction site .*

8.1.2 Design mix concrete may be *procured* from *approved* RMC plant as per latest IS: 4926 or *may be prepared* by using a portable/mini/compact *weigh* batch plant conforming to latest IS: 4925

8.1.3 As per provisions of IS: 456, fly ash conforming to grade I of IS: 3812 (part-1) may be used as part replacement of cement, when OPC cement is used for concrete works. Uniform blending with cement is to be ensured.

8.2 VOLUMETRIC MIX CONCRETE

8.2.1 Use of volumetric mix concrete shall be restricted to minor works only *(as per clause 8.1.1) with approval of engineer incharge. In such cases* reinforced cement concrete shall be of volumetric mix 1:1.5:3 (1 cement: 1.5 coarse sand: 3 well graded stone aggregate 20mm nominal size) conforming to CPWD specifications. Volumetric mix 1:1.5:3 shall be considered equivalent to M-20.

8.2.2 In case of volumetric mixes, Standard measuring boxes of 35cmX40cmX25cm (35 liters capacity as per CPWD) shall be used for measuring fine and coarse aggregates.

8.2.3 However, full 50 kg of OPC/PPC/Slag cement shall be directly unloaded into the mixer hopper to ensure that cement consumption is 400kg per cum of 1:1.5:3 concrete irrespective of different types of cements with different densities.

8.2.4 The cement consumption shall be as per DSR (CPWD) for other grades of concretes provided as volumetric concrete in the BPS.

8.2.5 For volumetric mix concretes, the cement used may be generally PPC type, however concrete may be prepared with OPC also, without any financial implication to POWERGRID.

9.0 REINFORCEMENT STEEL:

Reinforcement steel shall be thermo mechanically treated (TMT) or HYSD reinforcement bars of grade Fe 500D conforming to IS: 1786. Reinforcement shall be arranged by contractor.

10.0 DRAWINGS AND DESIGN TO BE DEVOLOPED BY CONTRACTOR / EMPLOYER DURING DETAILED ENGINEERING:

The following clauses are applicable for the design and drawings which are to be developed during detailed engineering either by *contractor*/ vendor or by employer as per section project.

~~10.1 CONTROL ROOM BUILDING:~~

NOT APPLICABLE

10.1.1 For AIS Substations: Control room building shall be of RCC framed structure & brickwork (Conventional).
For GIS Substations: Control room building shall be of RCC framed structure with brickwork; however its alignment shall be in line with GIS hall & may/may not be attached to GIS hall as per detail engineering.

10.1.2 In case of extension of Control room building, the same shall be matched with existing building, whether it is PEB or Conventional.

10.1.3 All walls shall be of non-load bearing Minimum wall thickness of full brick with 1:6 cement sand mortar. Partition walls in toilets and pantry can be half brick walls with 1:4 cement sand mortar and two nos. 6mm dia MS bars at every third course. CPWD specifications shall be followed for brick masonry work.

10.1.4 Partitions, if any required shall be made of powder coated aluminium frame (minimum thickness of powder coating is 50 micron) provided with minimum 5.5mm thick clear glass or pre-laminated board depending upon the location of partition.

10.1.5 The details of doors and windows of the control room building shall be as per finish schedule Table-1.

10.1.6 IS approved or ISI Marked PVC electrical conduits of shall be provided as per the requirement of electrical installations including its accessories, junction boxes/surfaces boxes, fan boxes etc. Areas where false ceiling is provided electrical conduit may be laid on exposed surfaces of walls or ceiling, above false ceiling area. In rest areas conduits & junction boxes, fan boxes etc. shall be concealed.

10.1.7 Contractor shall develop conduit layout drawing based on electrical illumination & Electrical installation drawings approved by POWERGRID. For control Room conference Hall/Admin Hall conduits are also to be provided below floor tiles for extending power supply/internet cables to Conference table users/ Admin Cubicles.

10.1.8 The plinth area of Control Room Building either PEB or conventional shall be as per respective items of BPS. The calculation of plinth area shall be as per IS:3861-2002. It shall comprise of following, to meet the functional requirement:

- Control room, ACDB & DCDB room, Battery room, Electrical lab, Telecom Room, In-Charge Room with attached toilet, Administrative area, Pantry, Lobby, Passage, toilet, shafts etc.
- Portico in case of RCC Building / 3m wide canopy in case of PEB
- One toilet should be disabled friendly.

10.1.9 The area for above provisions shall be suitably decided by bidder during detailed engineering stage in consultation with employer.

10.1.10 Control room building shall be so designed that most of the area of switchyard is visible from control room.

10.1.11 Open cable trenches in the building shall be covered with minimum 6mm thick steel chequered plate with suitable stiffeners. Chequered plate shall be painted with two or more coats of epoxy paint as per item 13.52 of DSR' 2014 over a coat of steel primer.

10.1.12 The isometric view of the CRB with local aesthetic and best industry practices shall be submitted by vendors for approval of POWERGRID. Three alternatives of colored isometric views with different color shades shall be submitted for approval.

10.1.13 All flooring area other than foundations shall be designed as industrial floor with minimum 100 mm thick RCC floor slab, laid over well compacted stone soiling of minimum 200 mm thick using stone of size 150 mm & below with interstices filled with sand over well compacted earth.

~~10.2 GIS BUILDING / GIS HALL:~~ NOT APPLICABLE

10.2.1 The New GIS building shall be of pre-engineered steel structure. GIS building consist of GIS hall, Room for control, protection & communication panels and AHU room. Provision for service bay and future extension of the building shall be made. During extension works in GIS hall, to keep the existing part of the building dust free, a temporary partition sheet of suitable material and strength shall be provided without any additional cost to POWERGRID. The same shall be removed after completion of work and taken back by contractor. Suitable space shall be provided to facilitate maintenance of GIS equipments. Panels shall be kept in an air-conditioned enclosure. The building shall be designed for future expansion also. Building shall be designed in such a manner that the same crane shall be extended in future expansion. Loads, structural design, fabrication & erection, material etc. of PEB structure shall be as per BIS standards

10.2.2 In case of extension of GIS building, the same shall be matched with existing type either PEB or conventional.

10.2.3 Size of the building shall be as per requirement of GIS modules, panel, O&M needs and housekeeping considerations. Any clearance required as per Electricity Act or any other Standard shall also be kept. Separate fire escape doors shall also be provided in the GIS Building

10.2.4 A Glazed partition made of aluminum extruded sections powder coated frame (min. 50 micron powder coating) and 5.5 mm (min) thick glass shall be provided between GIS hall and panel room. The total height of glazed partition shall 3000 mm above FFL include sill level of 900mm. Up to sill level full brick masonry wall to be provided and finished with Non-VOC acrylic emulsion paint to give an even shade on plastered surface over 2mm POP putty.

10.2.5 Over all Width of crane walk way shall not be less than 1.0m and shall be provided at gantry girder level on the two longer side of GIS hall along with climbing arrangement to facilitate maintenance of crane. Suitable arrangement shall be made on top of the crane, to facilitate maintenance of lighting fixtures. Structural steel of walkway shall be finished with priming coat of standard steel primmer followed by one coat of epoxy paint and final coating of PU (Minimum 100 Micron). The minimum clear height of the building shall be kept 1800 mm from the top of walk way or 600 mm above the top most point of crane, whichever is higher.

10.2.6 The base plate of steel columns shall be mounted on the RCC foundation by means of hot dip galvanized foundation bolts (The zinc coating shall be minimum 610 gram per square meter. In case the substation is located within 30km from sea coast, the zinc coating shall be 900gm per square meter. The purity of zinc shall be 99.95% as per IS: 209). *The RCC pedestal shall not protrude above floor level to avoid obstruction in the movement.*

10.2.7 PVC electrical conduits of ISI marked or IS approved shall be provided as per the requirement of electrical installations its accessories, junction boxes/surfaces boxes, fan boxes etc. Areas where false ceiling is provided and on puff panels, electrical conduit may be laid on exposed surfaces of walls or ceiling, above false ceiling area. In rest area conduit & junction boxes, fan boxes etc. shall be concealed wherever brick wall/RCC is provided.

10.2.8 The walls of GIS building and the attached relay room shall be of full brick and up to a height of 150mm above false ceiling level of relay room. Rest portion shall be provided with puff sandwiched panels as mentioned elsewhere in TS.

10.2.9 Open cable trenches in the GIS hall shall be covered with minimum 6mm thick steel chequered plate with suitable stiffeners. Chequered plate shall be painted with two or more coats of epoxy paint as per item 13.52 of DSR' 2014 over a coat of steel primer.

10.2.10 Colour Scheme matching with local aesthetic and best industry practices shall be submitted by vendors for approval of POWERGRID. Three alternatives of coloured isometric views with colour codes shall be submitted for approval. The monotony of external colour of sheet shall be avoided by providing vertical bands of different coloured sheet. The colour of roof sheet shall be light coloured to minimize heat absorption. External and internal masonry walls shall be painted with suitable approved colour in consultation with Employer.

10.2.11 All external openings for duct entries shall be provided with all round sunshade/chajjas to ensure that no rain water shall directly splashes on the sealant.

10.2.12 All flooring area other than foundations shall be designed as industrial floor with minimum 100 mm thick RCC floor slab, laid over well compacted stone soiling of minimum 200 mm thick using stone of size 150 mm & below with interstices filled with sand over well compacted earth *and with floor finish as per table - 1.*

10.3 BUILDING DESIGN CONSIDERARIONS:

~~THE CONTROL ROOM BUILDING & GIS BUILDING SHALL BE DESIGNED:~~

10.3.1 To the requirements of the National Building Code of India, and the standards quoted therein.

10.3.2 For the specified climatic & loading conditions.

10.3.3 To adequately suit the requirements of the equipment and apparatus contained in the buildings and in all respects to be compatible with the intended use and occupancy.

10.3.4 With a functional and economical space arrangement.

10.3.5 To be aesthetically pleasing. Different buildings shall show a uniformity and consistency in architectural design.

10.3.6 To allow for easy access to equipment and maintenance of the equipment.

10.3.7 With wherever required, fire retarding materials for walls, ceilings and doors, which would prevent supporting or spreading of fire.

10.3.8 With materials preventing dust accumulation.

10.3.9 With the FFL of building shall be minimum 750 mm above finished ground level or as indicated in the tender drawings. In case of extension of existing buildings, FFL should match with the existing buildings.

10.3.10 With anti-termite treatment, plinth protection, DPC, peripheral drain, sanitary, water supply, electrification etc.

10.3.11 With the building lighting, in accordance with the requirements of relevant section.

10.3.12 With the building auxiliary services like air conditioning and ventilation systems, fire protection and detection systems and all other miscellaneous services, in accordance with the requirements specified in relevant section or elsewhere in this Specification.

10.3.13 Most critical combinations of dead loads, super- imposed loads, equipment loads, crane load, wind loads, Snow load, seismic loads, any other load etc whichever is applicable shall be considered.

10.3.14 The individual members of the buildings frame shall be designed for the worst combination of forces such as bending moment, axial force, shear force, torsion deflection etc.

10.3.15 The permissible stresses for different load combinations shall be taken as per relevant BIS Codes.

10.3.16 All structures and its components must be designed and detailed as per latest BIS standards incorporating ductile detailing. List of reference codes e.g IS 456-2000 (latest), IS 875 all parts, IS 1893 all parts, IS 4326, IS 13920,SP34 etc.

10.3.17 RCC columns shall be provided with rigid connection at the base.

10.3.18 The design of steel structures for the Pre-engineered buildings shall be done in accordance with IS: 800-2007 with limit state method or elsewhere mentioned in section project.

10.3.19 Limit state method of Concrete design shall be adopted unless specified otherwise in the specification.

10.3.20 Clear cover to reinforcement shall be as per IS: 456 (latest).

10.3.21 Expansion joints wherever necessary with provision of twin columns shall be as per the provisions of relevant IS or National building codes.

10.3.22 Any sub-soil water encountered at founding level, same shall be considered in the

design.

10.3.24 For maintaining adequate air pressure inside GIS Halls following measures need to be adopted:

1. Elastomeric sealants to be provided at doors/windows junction with walls, duct entry points, roof joint, etc. to check any air leakages.
2. Cable sealing system shall be provided at the cable entry points.
3. Mats to be provided on cable trenches to reduce air leakage.
4. External doors shall be inward opening.
5. Providing of an air lock lobby for separating the inside area of GIS hall.

10.4 DESIGN LOADS:

The following loads shall be considered in design, in addition to the equipment manufacturer's requirements if any. However, all the loads, which are required for design, are subjected to employer's approval.

10.4.1 DEAD LOADS

i) Dead loads shall include the self-weight of all structures complete with finishes, fixtures and partitions.
ii) In addition, RCC beams shall be designed for any incidental point loads to be applied at any point along the beams if applicable.

10.4.2 IMPOSED LOADS

i) Super-imposed loads in different areas shall include live loads, minor equipment loads, cable trays, small pipe racks/hangers and erection, operation and maintenance loads wherever these loads are expected. Equipment loads shall constitute, if applicable, all load of equipments to be supported on the building frame.
ii) Floors/slabs shall be designed to carry loads imposed by equipment, cables and other loads associated with building. Cable load shall also be considered additionally for floors where these loads are expected.
iii) The floor loads shall be subject to Employer's approval. Floors shall be designed for live loads as per relevant IS 875 part 2 (latest), however, for Buildings, the following loads may be considered.

Roof	1.5 kN/m2 for accessible roofs and 0.75 kN/m2 for in-accessible roofs
RCC-Floor	i) 5 kN/m2 for offices ii) 10 kN/m2 (min.) for equipment floors or actual requirement, if higher than 10kN/m2 on

	equipment component and layout plans
Stairs & balconies	5 kN/m2
Toilets	2 kN/m2
Chequered plate floor	4 kN/m2
Walkways	3 kN/m2

iv) For crane loads an impact factor of 30% and lateral crane surge of 10% (lifted weight + trolley) shall be considered in the analysis of frame according to provisions of IS:875. The horizontal surge shall be 5% of the static wheel load. Crane load shall be applied as per the requirement of building.

10.4.3 WIND LOAD

i) The wind loads shall be computed as per IS 875 part 3 (latest), the class of structure for design, k1 factor, shall be considered under the category as 'important buildings and structures like hospitals, communication buildings/towers, power plant structures' for Control Room building, GIS hall, Towers, Gantries, equipment structure. For other buildings/structures wind loads shall be computed as per IS 875 part 3 (latest).
ii) Wind and Seismic forces shall not be considered to act simultaneously.

10.4.4 SEISMIC LOAD

i) Seismic Coefficient method/Response Spectrum method shall be used for the seismic analysis as per IS: 1893: Part 1 with importance factor 1.5.
ii) Wind and Seismic forces shall not be considered to act simultaneously.

10.4.5 SNOW LOAD

i) Snow load shall be computed as per IS:875 part 4 (latest).
ii) When snow load is present in roofs, replace imposed load by snow load in respective load combinations.

10.4.6 LOAD COMBINATIONS

i) The critical load combinations for design of RCC structures shall be computed or generated by using IS: 875 Part-5 (latest), IS: 456 (latest), IS: 1893- part 1 (latest).
ii) The critical load combinations for design of Steel structures shall be computed or generated by using IS: 875 Part-5 (latest), IS: 800, IS: 1893- part 1 (latest).

10.5 DESIGN OF FOUNDATIONS FOR BUILDINGS & OTHER SWITCH YARD STRUCTURES:

10.5.1 All foundation shall be of reinforced cement concrete. The design and construction of RCC structures shall be carried out as per IS: 456. Minimum 75mm thick lean concrete (1:4:8) shall be provided below all underground structures, foundations, trenches etc. to provide a base for construction

10.5.2 The switchyard foundation's plinths shall be minimum 300mm and buildings plinth shall be minimum 600 mm above finished ground level respectively. If the site is sloping, the foundation height will be adjusted to maintain the exact level of the top of structures to compensate such slopes.

10.5.3 The tower and equipment foundations shall be checked for a partial factor of safety of 2.2 for normal condition and 1.65 for short circuit condition.

10.5.4 The design and detailing of foundations shall be done based on the approved soil data and sub-soil conditions as well as for all possible critical loads and the combinations thereof. The Isolated/ Combined/ Strip footings / Raft or pile foundation as may be required based on soil/sub-soil conditions and superimposed loads shall be provided

10.5.5 The procedure used for the design of the foundations shall be the most critical loading combination of the steel structure and or equipment and/or superstructure and other conditions which produces the maximum stresses in the foundation or the foundation component and as per the relevant BIS Codes of foundation design. Detailed design calculations shall be submitted by the bidder showing complete details.

10.5.6 Necessary protection to the foundation work, if required shall be provided to take care of any special requirements for aggressive alkaline soil, black cotton soil or any other type of soil which is detrimental/harmful to the concrete foundations.

10.5.7 If pile foundations are adopted, the same shall be cast-in-situ bored or pre-cast or under reamed type as per relevant parts of IS: 2911. Only RCC piles shall be provided. Necessary initial load test shall be carried out by the Contractor to establish the pile design capacity. Only after the design capacity of pile has been established, the Contractor shall take up the job of piling. Routine tests for the pile shall also be conducted as per IS: 2911/IS :10262. All the testing work shall be planned in such a way that these shall not cause any delay in project completion. RCC for pile works shall be Design Mix of minimum grade M-25 and also minimum cement content shall be 400Kg/ cu.m as per IS:2911 (Latest revision). In case extra cement is required to meet the provisions of IS: 2911, it will be paid extra.

10.5.8 The foundations shall be proportioned so that the estimated total and differential movements of the foundations are not greater than the movements that the structure or equipment is designed to accommodate.

10.6 DESIGN OF TRANSFORMER AND REACTOR FOUNDATION:

10.6.1 The foundations of Transformer & Reactor shall be of block type foundation. Minimum reinforcement shall be governed by IS: 2974 and IS: 456. In case of Reactor Plan dimension of block should not be less than size of base of reactor.

10.6.2 The Contractor shall provide a RCC Rail cum road system integrated with the Autotransformer / Reactor foundation to enable installation and the replacement of any failed unit. The transfer track system shall be suitable to permit the movement of any failed unit fully assembled (including OLTC, bushings) with oil.

10.6.3 This system shall enable the removal of any failed unit from its foundation to the nearest road. If trench/drain crossings are required then suitable R.C.C. culverts shall be provided in accordance with I.R.C. standard / relevant IS.

10.6.4 The Contractor shall provide a pylon support system for supporting the firefighting system.

10.6.5 Each Autotransformer/Reactor including oil conservator tank and cooler banks etc. shall be placed in a self-sufficient pit surrounded by retaining walls (Pit walls). The clear distance of the retaining wall of the pit from the Autotransformer/Reactor shall be 20% of the Autotransformer/Reactor/ cooler bank height or 0.8m whichever is higher. The oil collection pit thus formed shall have a void volume equal to 200% volume of total oil in the Autotransformer/Reactor. In case of transformers of 132kV and below, where hydrant system for firefighting is not provided, volume of pit may be reduced to 130% of total oil volume. However, in case common oil pit is envisaged during detailed engineering, the individual oil collection pit thus formed shall have a void volume equal to 33% volume of total oil in the Autotransformer/Reactor. The common oil collection pit shall have a void volume equal to 200% volume of maximum total oil of either Autotransformer or Reactor.

10.6.6 The minimum height of the retaining walls of pit shall be 20 cm above the finished level of the ground to avoid outside water pouring inside the pit. The bottom of the pit shall have a uniform slope towards the sump pit. While designing the oil collection pit, the movement of the autotransformer / reactor must be taken into account.

10.6.7 The grating shall be made of MS flat of size 30mm x 5mm placed at 30mm centre to centre and 6mm dia MS bar at spacing of 150mm at right angle to each other.

Maximum length of grating shall be 2000mm and width shall not be more than 500mm. The gratings, supported on ISMB 150 mm, shall be placed at the formation level and will be covered with 100mm thick layer of stone aggregate having size 40mm to 60mm. All steel work used for grating and supports shall be painted with epoxy based zinc phosphate primer (two packs) confirming to IS: 13238- 1991, thereafter with two or more coat of bituminous paint of approved quality shall be applied. Contractor shall have option to provide factory made electro forged MS grating made of specified size MS flat and round bars without any extra cost to employer.

10.6.8 Each oil collection pit shall be drained towards a sump pit of size 1000X750mm and 500mm deep below the floor level within the collection pit whose role is to drain water and oil due to leakage within the collection pit so that collection pit remains dry.

10.7 DESIGN OF FIRE PROTECTION WALLS:

10.7.1 The construction of fire walls shall be cast in situ type or pre cast RCC as per drawings and meeting the technical specification.

10.7.2 The firewall shall have a minimum fire resistance of 4 hours. The walls of the building, which are to be used as firewalls, shall have also a minimum fire resistance of 4 hours. The firewall shall be designed to protect against the effect of radiant heat and flying debris from an adjacent fire.

10.7.3 The firewall shall extend 600 mm on each side of the Autotransformer or Reactors and 600 mm above the conservator tank or safety vent. A minimum of 2.0 meter clearance shall be provided between the equipment's e.g. Autotransformer or Reactors and firewalls. In case of space constraints, these dimensions can be reduced as per the approval of Employer.

10.7.4 The building walls, which act as firewalls, shall extend at least 1 m above the roof or 600 mm above the conservator tank or safety vent, whichever is maximum, in order to protect it.

10.7.5 The firewall will be made of reinforced cement concrete with smooth surfaces devoid of honey comb, undulations etc. and shall be finished with water proofing cement paint of approved colour.

10.8 DESIGN OF WATER TANKS, CHANNELS, SUMPS, TRENCHES AND OTHER UNDER-GROUND STRUCTURES:

10.8.1 RCC water retaining structures like storage tanks, etc. shall be designed as un-cracked section in accordance with IS: 3370 (Part I to IV) by working stress method. In case of

water channels, shall be designed as cracked section with limited steel stresses as per IS: 3370 (Part I to IV) by working stress method.

10.8.2 All sub-structures shall be checked for sliding and overturning stability during both construction and operating conditions for various combinations of loads. Factors of safety for these cases shall be taken as mentioned in relevant BIS Codes or as stipulated elsewhere in the Specifications. For checking against overturning, weight of soil vertically above footing shall be taken and inverted frustum of pyramid of earth on the foundation should not be considered.

10.8.3 Earth pressure for all underground RCC structures like cable trenches, underground water tanks, Oil collection pits, Septic tanks, basements etc. shall be calculated using co-efficient of earth pressure at rest, co-efficient of active or passive earth pressure (whichever is applicable). However, for the design of substructures of any underground enclosures, earth pressure at rest shall be considered.

10.8.4 In addition to earth pressure and ground water pressure etc., a surcharge load of 2T/Sq.m shall also be considered for the design of all underground structures for the vehicular traffic in the vicinity of the structure.

10.8.5 Underground tanks shall be checked for full water pressure from inside and no earth pressure & ground water pressure & surcharge pressure from outside (application only to structures which are liable to be filled up with water or any other liquid). They shall also be checked for full earth pressure, surcharge pressure and ground water pressure from outside and no water pressure from inside.

10.8.6 Design shall also be checked against buoyancy due to the ground water during construction and maintenance stages. Minimum factor of safety of 1.5 against buoyancy shall be ensured ignoring the superimposed loadings. Base slab of any underground enclosure shall also be designed for empty condition during construction and maintenance stages with maximum ground water table (GWT). Minimum factor of safety of 1.5 against buoyancy shall be ensured ignoring the super-imposed loadings.

10.8.7 Base slab of any underground enclosure like water storage tank shall also be designed for the condition of different combination of pump sumps being empty during maintenance stages with maximum GWT. Intermediate dividing piers of such enclosures shall be designed considering water in one pump sump only and the other pumps sump being empty for maintenance.

~~10.9 INTERNAL FINISH SCHEDULE FOR BUILDING & GIS HALL EITHER RCC/ PEB:~~

10.9.1 Internal finishing Schedule for control room building and GIS hall is given in Table - 1 below: The Locations, which are not specified in finish schedule, shall be provided with

vitrified tile flooring and premium acrylic emulsion paint over two mm thick POP putty. The below mentioned finishing schedule is also applicable for extension of Control room or GIS hall unless otherwise mentioned else-where in the Tender. Areas where false ceiling is provided, electrical conduit may be laid on exposed surfaces of walls or ceiling, above false ceiling area.

Table-1

Sr. No.	LOCATION	FLOORING & SKIRTING 150MM HIGH	WALL (INTERNAL)	CEILING	DOOR, WINDOWS & VENTILATOR
1	Control Room	Vitrified tiles size 600 x 600mm (DSR Item 11.46)	Non VOC acrylic emulsion paint over 2mm POP putty upto false ceiling over approved primer coat	False ceiling painted with Non VOC acrylic emulsion paint to give an even shade.	Windows shall be of min. 10mm thick laminated float safety glass conforms to IS: 2553 (Part-I) by using suitable powder coated aluminum extruded sections peripheral frame. The glazed window shall be provided between column to column horizontally and vertically from sill level of 0.75 m to bottom false ceiling. In a window 2 to 3 vertical pieces may be provided depending upon the availability of glass and the vertical joint shall be sealed with silicon sealant. All doors shall be glazed powder coated aluminium doors with minimum 5.5 mm thk. glass
2	Confer-ence Room	Vitrified tiles size 600 x 600mm (DSR Item 11.46)	Non VOC acrylic emulsion paint over 2mm POP putty upto false ceiling	False ceiling painted with Non VOC acrylic emulsion paint to give an even shade.	All doors, windows, ventilators shall be of uPVC with minimum 5.5.mm thk. Glazing.

			over approved primer coat		
3	(S/S In-charge Room)	Vitrified tiles size 600 x 600mm (DSR Item 11.46)	Non VOC acrylic emulsion paint over 2mm POP putty upto false ceiling over approved primer coat	False ceiling painted with Non VOC acrylic emulsion paint to give an even shade.	All doors, windows, ventilators shall be of uPVC with minimum 5.5.mm thk. Glazing.
4	Other Office Rooms	Vitrified tiles size 600 x 600mm (DSR Item 11.46)	Non VOC acrylic emulsion paint over 2mm POP putty upto false ceiling over approved primer coat.	False ceiling painted with Non VOC acrylic emulsion paint to give an even shade.	All doors, windows, ventilators shall be of uPVC with minimum 5.5.mm thk. Glazing.
5	Electronics Test Lab.	Vitrified tiles size 600 x 600mm (DSR Item 11.46)	Non VOC acrylic emulsion paint over 2mm POP putty false ceiling over approved primer coat	False ceiling painted with Non VOC acrylic emulsion paint to give an even shade.	All doors, windows, ventilators shall be of uPVC with minimum 5.5.mm thk. Glazing.
6	ACDB& DCDB Room	62mm thick cement concrete flooring with hardener	Non VOC acrylic emulsion paint over 2mm POP putty upto false ceiling over approved primer coat	Non VOC acrylic emulsion paint over approved primer coat for RCC Building / False ceiling shall be provided in-case of PEB building.	All doors, windows, ventilators shall be of uPVC with minimum 5.5.mm thk. Glazing.
7	Battery room	Vitrified tiles size 600 x 600mm (DSR Item	Non VOC acrylic emulsion paint over 2mm POP putty upto	False ceiling painted with Non VOC acrylic emulsion paint to give an even	All doors Windows/ventilator shall be glazed uPVC doors with minimum 5.5.mm thk. Glazing.

		11.46)	false ceiling over approved primer coat	shade.	
8	Lobby	18mm thick granite flooring (DSR Item 8.12)	Non VOC acrylic emulsion paint ove r2mm POP putty upto false ceiling over approved primer coat	False ceiling painted with Non VOC acrylic emulsion paint to give an even shade.	All doors, windows, ventilators shall be of uPVC with minimum 5.5.mm thk. Glazing.
9	Corridor	Vitrified tiles size 600 x 600mm (DSR Item 11.46)	Non VOC acrylic emulsion paint over 2mm POP putty upto false ceiling over approved primer coat	False ceiling painted with Non VOC acrylic emulsion paint to give an even shade.	All doors, windows, ventilators shall be of uPVC with minimum 5.5.mm thk. Glazing.
10	Portico for RCC Building	18mm thick granite flooring(DSR Item 8.12)	Granite cladding	Non VOC acrylic emulsion paint over approved primer coat	All doors, windows, ventilators shall be of uPVC with minimum 5.5.mm thk. Glazing.
11	Toilet	Ceramic tiles (DSR item 11.38)	DADO glazed tile 2100mm high, above that non VOC acrylic emulsion paint over 2 mm thick POP putty along with primer coat.	Non VOC acrylic emulsion paint over approved primer coat for RCC building / False ceiling shall be provided in-case of PEB building.	All windows, ventilators shall be of uPVC with minimum 5.5.mm thk. Glazing. All doors shall be flush door shutters made of pre-laminated particle board (DSR 9.131 & 9.132) with powder coated aluminum frame.
12	Janitor room	Ceramic tiles (DSR item 11.38)	DADO glazed tile 2100mm high, above that non VOC acrylic emulsion paint	Non VOC acrylic emulsion paint over approved primer coat for RCC building / False ceiling	All windows, ventilators shall be of uPVC with minimum 5.5.mm thk. Glazing. All doors shall be flush door shutters made of

			over 2mm thk. POP putty along with primer coat.	shall be provided in-case of PEB building.	pre-laminated particle board (DSR 9.131 & 9.132) with powder coated aluminium frame.
13	GIS Hall	62mm thick cement concrete flooring with hardener. Two coats of PU coating over the floor shall be provided. over the total area (Present + Future). The final coat of PU shall be applied after Installation of equipments. Total thickness of PU coats shall be minimum 300 microns.	Non VOC acrylic emulsion paint over 2mm POP putty upto false ceiling over approved primer coat over plastered surface	In case of RCC roof, ceiling shall be finished with Non VOC acrylic emulsion paint over approved primer coat.	All doors, windows, ventilators shall be of uPVC with minimum 5.5.mm thk. Glazing.
14	Panel/ Relay Room/	Vitrified tiles 8mm thick size	Non VOC acrylic emulsion paint	False ceiling painted with Non VOC acrylic	All doors, windows, ventilators shall be of uPVC with minimum

	Communication Room	600 x 600mm	over 2mm POP putty upto false ceiling over approved primer coat primer coat over plastered surface	emulsion paint to give an even shade.	5.5.mm thk. Glazing.
15	AHU Room	62mm thick cement concrete flooring with hardener	Non VOC acrylic emulsion paint over 2mm POP putty upto false ceiling over approved primer coat primer coat over plastered surface	RCC ceiling finished with non-VOC acrylic emulsion paint over approved primer coat.	All windows, ventilators shall be of uPVC with minimum 5.5.mm thk. Glazing. All doors shall be flush door shutters (35mm thk. block board with commercial veneer on both side with lipping) with powder coated aluminium frame.

uPVC doors, windows, ventilators shall be sliding or openable or partially openable/partially fixed or fixed type of factory made uPVC doors, windows (casement/sliding), ventilators, fixed glazing and partitions as per DSR '16 item no. 9.147A to 9.147F.

10.10 <u>FALSE CEILING DETAILS:</u>

10.10.1 For the locations of false ceiling refer table -1 above, unless otherwise specified elsewhere in tender documents.

10.10.2 15mm thick densified tegular edged eco friendly light weight calcium silicate false ceiling tiles of approved texture spintone/cosmos/ Hexa or equivalent of size 595x595 mm in true horizontal level, suspended on inter locking metal grid of hot dipped galvanised steel sections (galvanising @ 120 grams per sqm. Including both side).

Consisting of main 'T' runner suitably spaced at joints to get required length and of size 24x38 mm made from 0.33 mm thick (minimum) sheet, spaced 1200 mm centre to centre, and cross 'T' of size 24x28 mm made out of 0,33 mm (minimum) sheet, 1200 mm long spaced between main 'T' at 600 mm centre to centre to form a grid of 1200x600 mm and secondary cross 'T' of length 600 mm and size of 24x28 mm made of 0.33 mm thick (minimum) sheet to be interlocked at middle of the 1200x600 mm panel to form grid of size 600x600 mm, resting on periphery walls/partitions on a perimeter wall angle precoated steel of size (24x24x300 mm made of 0.40 mm thick (minimum) sheet with

the help of rawl plugs at 450 mm centre to centre with 25 mm long drywall screws @230 mm interval and laying 15 mm thick densified edges calcium silicate ceiling tiles of approved texture (Spintone/ Cosmos/ hexa) in the grid, including, cutting/making openings for services like diffusers, grills, light fittings, fixtures, smoke detectors etc., Wherever required.

Main 'T' runners to be suspended from, ceiling using G.I. slotted cleats of size 25x35x1.6 mm fixed to ceiling with 12.5 mm dia and 50 mm long dash fasteners, 4 mm G.I. adjustable rods with galvanised steel level clips of size 85x30x0.8 mm, spaced at 1200 mm centre to centre along main 'T', bottom exposed with 24 mm of all T-section shall be pre-painted with polyester baked paint, for all heights, as per specifications, drawings and as directed by engineer- in-charge.

10.11 WATER PROOFING TREATMENT

10.11.1 Integral cement based water proofing treatment including preparation of surface as required for treatment of roofs, balconies, terraces etc consisting of following operations:

a) Applying a slurry coat of neat cement using 2.75 kg/sqm. of cement admixed with water proofing compound conforming to IS. 2645 and approved by Engineer-in-charge over the RCC slab including adjoining walls upto 300mm height including cleaning the surface before treatment.
b) Laying brick bats with mortar using broken bricks/brick bats 25 mm to 115 mm size with 50% of cement mortar 1:5 (1 cement : 5 coarse sand) admixed with water proofing compound conforming to IS : 2645 and approved by Engineer-in-charge over 20 mm thick layer of cement mortar of mix 1:5 (1 cement :5 coarse sand) admixed with water proofing compound conforming to IS : 2645 and approved by Engineer-in-charge to required slope and treating similarly the adjoining walls upto 300 mm height including rounding of junctions of walls and slabs
c) After two days of proper curing applying a second coat of cement slurry using 2.75 kg/ sqm of cement admixed with water proofing compound conforming to IS : 2645 and approved by Engineer-in-charge.

d) Finishing the surface with 20 mm thick joint less cement mortar of mix 1:4 (1 cement :4 coarse sand) admixed with water proofing compound conforming to IS : 2645 and approved by Engineer-in-charge including laying glass fibre cloth of approved quality in top layer of plaster and finally finishing the surface with trowel with neat cement slurry and making pattern of 300x300 mm square 3 mm deep.

e) The whole terrace so finished shall be flooded with water for a minimum period of two weeks for curing and for final test. All above operations to be done in order and as directed and specified by the Engineer-in-Charge

f) With average thickness of 120mm and minimum thickness at khurra as 65 mm.

10.11.2 Alternatively in case of non- availability of good quality of brick bats, the water proofing treatment can also be done in the following manner:
The water proofing membrane shall be laid on the RCC slab without any break. The grading concrete (1:2:4) of average thickness of 50 mm with water proofing compound as per manufacturer's specification shall be laid over the membrane. Cement concrete flooring of 40mm thick with (1cement: 2 fine aggregate: 4 stone aggregate 20mm graded stone aggregate) finished with a floating coat of neat cement including cement slurry complete shall be laid over grading concrete and checkered pattern in the grid of 300mm x 300mm shall be made .

10.11.3 SUNKEN WATER PROOFING (RCC):

- Water proofing treatment shall be done in sunken portion of WCs, bathroom etc. by applying cement slurry mixed with water proofing cement compound consisting of:

a) First layer of slurry of cement @ 0.488 kg/sqm mixed with water proofing cement compound @ 0.253 kg/ sqm. This layer will be allowed to air cure for 4 hours.
b) Second layer of slurry of cement @ 0.242 kg/sqm mixed with water proofing cement compound @ 0.126 kg/sqm. This layer will be allowed to air cure for 4 hours followed with water curing for 48 hours.

- Treatment and sealing of joints, corners, junction of pipes and masonary with polymer mixed slurry shall be carried out as per CPWD specifications.

~~10.12 SPECIFICATION FOR PLUMBING, SANITATION & WATER SUPPLY ETC:~~

10.12.1 All plumbing and sanitation shall be executed to comply with the requirements of the appropriate bye-laws, rules and regulations of the Local Authority having jurisdiction over such matters. The Contractor shall arrange for all necessary formalities to be met in regard to inspection, testing, obtaining approval and giving notices etc.

10.12.2 Provision for water cooler shall be provided at suitable location.

10.12.3 Each toilet shall be provided with Water Closet, Wash hand basin, health faucet, Mirror, Towel Rail, Paper Holder, Liquid soap dispenser, twin coat holder.

10.12.4 In addition to general requirements of each toilets, 2 nos. Sensor based urinals shall be provided for common Gents toilet.

10.12.5 Pantry shall be provided with stainless steel kitchen sink.

10.12.6 The platform of kitchen sink and wash hand basin shall be provided with 18 mm thk. Mirror polished approved granite stone.

10.12.7 The specification of different items, which are to be used for plumbing, sanitation & water supply etc. in are given below, the same shall be used during detailed engineering, unless otherwise mentioned else-where in the tender.

S.No.	Items	Description
1	Wall hung Water Closet	Coloured vitreous china extended wall mounting water closet of approved size and shape including providing & fixing white vitreous china cistern with dual flush fitting, of flushing capacity 3 litre/6 litre (adjustable to 4 litre/8 litres), including seat cover, and cistern fittings, nuts, bolts and gasket etc complete.
2	Squatting Pan	(Indian type W.C. pan) (white vitreous china Orissa pattern W.C. pan of size 580x440mm with integral type foot rests) shall be with 100mm sand cast iron P or S trap. 10 litre low level white P.V.C flushing cistern with manually controlled device (handle lever) conforming to IS:7231, with all fittings and fixtures complete including cutting and making good the walls and floors wherever required.
3	Wash Basin	Providing and fixing coloured wash basin counter type of (approximate size 630x450mm size under counter or over counter type), in case flat bash hand is required the approximate size shall be 550x400mm and shall be provided with C.P. close basin mixer (ISI approved) with CI. Brackets taps with battery based infrared sensor, 32mm C.P. brass waste and bottle trap of standard pattern, including painting of fittings and brackets, cutting and making good the walls wherever required. Other details shall be as per the drawings.
4	Urinal	White vitreous china battery based infrared sensor operated urinal of approx. size 610 x 390 x 370 mm having pre & post flushing with water (250 ml & 500 ml consumption), having water inlet from back side, including fixing to wall with suitable brackets all as per manufacturers specification and direction of Engineer-in-charge.
5	Urinal partition	10mm thk toughened glass partition with frosted film to be fixed in position for urinals on appropriate stainless steel patch fittings of desired shape and size
6	Kitchen sink	Stainless steel AISI 304 (18/8) Kitchen sink of 510x1040 mm bowl with depth of 178mm with drain board shall be provided and fixed as per IS 13983 with C.I brackets, and stainless steel plug 40mm with provision of 2 nos. CP brass long body bib cock conforming to IS Standard and weighing not less than 650 gm for CP bottle trap etc.

		including painting of fittings and brackets, cutting and making good the wall.
7	Bib cock	C.P. brass short body and long body bib cock 15mm nominal bore shall be of approved quality conforming to IS: 8931.
8	Angle valve	C.P. brass angle valve of 15mm nominal bore provided and fixed in position for basin and cistern points of approved quality conforming IS :8931.
9	Towel rail	C.P. brass towel rail of approved make of 600mm length, 25mm dia with a pair of brackets or flanges provided and fixed to wall beside each wash basin/set of wash basin with necessary screws, plugs, etc.
10	Mirror	6mm thick beveled edge mirror approximate size 1000x600mm made of superior glass of approved make complete with a backing of 6 mm thick water proof hard board fixed to wooden cleats with 25mm dia SS studs, washers etc complete for each wash basin.
11	Hooks	Double type coat & hat hooks with flanges, fixed to wall / shutter, etc. with necessary screws, washers & plugs.
12	Liquid soap holder	C.P. brass liquid soap holder of approved make fixed with each wash basin to the wall with necessary CP brackets, CP screws, washers, plugs etc.
13	C.P. Brass or S.S. cockroach trap	Approved C.P. Brass cockroach trap shall be provided in the Kitchen, Toilets and pantry
14	Floor traps	PVC floor traps of self cleansing design shall be provided & fixed in position with 100 mm dia. inlet and 75mm dia. outlet of approved make, including making connection with PVC soil/waste pipes using rubber gaskets, embedding the trap in 150 mm thick PCC 1:2:4.
15	Internal Soil, waste and vent pipe	Unplasticised rigid PVC pipes of 75mm for waste & 110mm dia for soil shall be provided conforming to IS:13592 type B and all its fittings like bends, sockets, door bend, Y-tee etc. as per requirement with seal ring conforming to IS: 5382 including jointing with cement solvent conforms to IS:14182. All underground or under floor pipes shall be encased with 1:3:6 concrete. Minimum concrete cover shall be 75 mm thk.

16	Rain Water Pipe and fittings	a) Unplasticised rigid PVC rain water pipes of required dia shall be provided and fixed on the wall face conforming to IS: 13592 type A as per requirement including jointing with seal ring conforming to IS: 5382 leaving 10mm gap for thermal expansion single socketed pipes including all fittings like bends, bat clamps gratings etc. b) Unplasticised PVC Moulded fittings/accessories including suitable dia. bend & shoes shall be provided and fixed for unplasticised rigid PVC rain water pipes conforming to IS:13592 type A including jointing with seal ring conforming to IS: 5382 leaving 10mm gap for thermal expansion. c) Clips of approved design shall be provided and fixed to unplasticised PVC rain water pipes by means of 50x50x50mm hard wood plugs, screwed with MS screws of required length including cutting brick work and fixing in cement mortar1:4 (1 cement : 4 coarse sand) and making good the wall etc
17	Internal & External water supply	a) All CPVC pies and fittings shall conform to IS:15778 b) All internal CPVC pipe shall be concealed including cutting of chases and making good the wall. c) Wherever CPVC pipes are buried the same shall be provided and laid in position including trenching, sand cushion and refilling, etc. For trenching, sand cushion and refilling refer CPWD specification applicable for external piping work. d) All internal CPVC pipe shall be concealed including cutting of chases and making good the wall. e) ISI approved CPVC ball valve, non-return valves shall be provided and fixed in position as per requirement and direction of Engineer-in-charge.
18	Water storage tanks	Triple layered Polyethylene water storage tanks shall be provided of approved brand and manufacture with cover and suitable locking arrangement, float valve and making necessary holes for inlet, outlet and overflow pipes. Capacity of water tank shall be 2x1500 litres for control room, 2X2000 litres for Transit Camp.
19	Sluice valve chamber	Masonry chamber for sluice valve shall be 600x600mm size in plan and depth 750mm, or matching with the site condition inside with 50 class designation brick work in cement mortar 1:5 (1 cement : 5 fine sand) with CI surface box 100 mm. Top diameter, 160 mm bottom dia and 180 mm deep (inside) with chained lid and RCC top slab 1:2:4 mix (1cement : 2 coarse sand: 4 graded stone aggregate 20 mm nominal size) necessary excavation foundation concrete 1:5:10 (1 cement : 5 fine aggregate : 10 graded stone aggregate 40 mm nominal size) and inside plastering with cement mortar 1:3 (1

		cement : 3 coarse sand) 12 mm thick finished with a floating coat of neat cement complete as per standard design with FPS bricks of class 75.
20	External Sewerage	Glazed stoneware pipes of 100 & 150mm diameter grade 'A' shall be provided, laid and jointed with stiff mixture of cement mortar in the proportion of 1:1 (1cement :1 fine sand) including testing of joints etc. complete. SW pipes shall be encased with Cement concrete 1:5:10 (1 cement: 5 coarse sand: 10 graded stone aggregate 40 mm nominal size) including bed concrete as per CPWD standard design and CPWD specifications. In case of non-availability of SW Pipe, contractor may use UPVC Pipe of similar dia with the prior approval of EIC without any financial implication to POWERGRID.
21	Gully trap	100x100 mm or 150x100 mm size P type Square-mouth S.W. gully trap class SP-1 complete with C.I. grating brick masonry chamber and water tight C.I. cover frame o f 300 x300 mm size (inside), the weight of cover to be not less than 4.50 kg and frame to be not less than 2.70 kg as per standard design. FPS Bricks class designation 75 shall be provided for brick masonry chamber.
22	Manholes	FPS brick masonry manhole shall be constructed in cement mortar 1:4 (1 cement :4 coarse sand) RCC top slab with 1:2:4 mix (1 cement : 2 fine aggregate : 4 graded stone aggregate 20 mm nominal size) foundation concrete 1:4:8 mix (1cement : 4 coarse sand :8 graded stone aggregate 40 mm nominal size) inside plastering 12 mm thick with cement mortar 1:3 (1 cement : 3 coarse sand) finished with floating coat of neat cement and making channels in cement concrete 1:2:4 (1 cement: 2 coarse sand :4 graded stone aggregate 20 mm nominal size) finished with a floating coat of neat cement complete as per standard design. The size and depth of manhole shall be suitably decided based on requirement of layout in line with CPWD specification. a) Inside size shall be 90 x 80 cm and 60 cm deep including CI cover with frame (light duty) 455 x 610 mm internal dimensions total weight of cover and frame shall not be less than 38 kg (weight of cover 23 kg and weight of frame 15 kg) and shall be constructed with F.P.S. bricks with class designation 75. b) Inside size shall be 120 x 90 cm and 90 cm or more deep including CI cover with frame (medium duty) 500mm internal diameter total weight of cover and frame to be not less than 116 kg (weight of cover 58 kg and weight of frame 58 kg) with FPS Bricks class designation 75.

23	Foot Rest	Orange colour safety foot rest of minimum 6 mm thick plastic encapsulated as per IS : 10910, on 12 mm dia steel bar conforming to IS: 1786, having minimum cross section as 23 mmx25 mm and over all minimum length 263 mm and width as 165 mm with minimum 112 mm space between protruded legs having 2 mm tread on top surface by ribbing or chequering besides necessary and adequate anchoring projections on tail length on 138 mm as per standard drawing and suitable to with stand the bend test and chemical resistance test as per specifications and having manufacture's permanent identification mark to be visible even after fixing, fixing in manholes with 30x20x15 cm cement concrete block 1:3:6 (1 cement : 3 fine aggregate : 6 graded stone aggregate 20 mm nominal size) complete.
24	Road Gully Chamber	Brick Masonry road gully chamber of 50x45x60cm shall be provided with FPS brick with cement mortar 1:4 including 500x450mm pre cast RCC Horizontal/vertical grating with frame complete.

~~11.0 MATERIAL SPECIFICATION FOR ALL PRE-ENGINEERED BUILDINGS:~~

11.1 STRUCTURAL STEEL MEMBERS:

11.1.1 Primary structural framing shall include the transverse rigid frames, columns, corner columns, end wall wind columns and crane gantry girders and Frames at Door openings.

11.1.2 Primary members are fabricated from plates and sections with minimum yield strength of 340 Mpa to suit design by continuous double side welding.

11.1.3 All miscellaneous structural members, rod bracings, angle bracings, pipe bracings, wind bracings, sag rods, etc. shall conform to the physical specification of IS: 2062 with a minimum 245Mpa Yield Strength.

11.1.4 All welded structural steel members shall be provided with suitable treatment of shot blasting before application of steel primer.

11.1.5 All structural steel members including walk way structural steel members shall be painted with a steel priming coat followed by one coat of epoxy paint and final coating of PU (Minimum 100 Micron).

11.1.6 The structural steel members of cage ladder shall be galvanized with 610 gm/sqm.

11.2 PURLINS AND GIRTS MEMBERS:

11.2.1 Purlins, girts, necessary clips and other cold rolled structural members shall conform to the physical specification of ASTM A570 (Grade 50) or equivalent IS Standards having a minimum yield strength of 340 MPa and shall be of Pre galvanised having a total coating thickness of 275 gm/sqm. inclusive of both sides.

11.2.2 The minimum thickness of secondary members shall be 2.5mm.

11.3 ROOF & WALL SHEETING:

11.3.1 Factory assembled 50mm thick puff (overall average density 40kg/cu.m. +/- 2 Kg/cu m as per IS: 11239 Part-2) sandwiched panels shall be provided. These panels shall be made of puff insulation sandwiched between two high tensile steel sheets each of 0.5 mm thickness. The material of sheets shall confirm to ASTM 792 M with minimum yield strength of 340 Mpa. However, higher grades of steel sheet may be supplied without any further cost implication.

11.3.2 The steel sheets shall be provided with hot dip coating of Zinc aluminium alloy (approximately 55% Al, 43.5% Zn and 1.5 % silicon).Total mass of zinc aluminium alloy coating shall be minimum 150 gm/Sq. m inclusive of both sides. The tolerance of base metal thickness (BMT) of steel sheet shall be as per IS 16163. After hot dip coating of Zinc aluminium alloy, the sheet shall be provided with steel primer and silicon modified polyester (SMP) paint. The total thickness of primer and paint shall be 40 microns inclusive of both sides (TCT) comprising of 20 microns of SMP paint on top surface and 10 microns of backer coat (polyester coat) on back surface over 5 microns thick primer each on both surfaces with inorganic pigments coated free from heavy metals. Painting shall conform to IS: 15965. In case SMP paint is not available, Super Durable Polyester paint (SDP) can also be used by the bidder without cost implication to POWERGRID.

11.4 SHEETING FASTENERS:

Standard fasteners shall be self tapping zinc plated metal screws with EPDM bonded zinc plated washers. All screws shall be colour coated to match roof and wall sheeting.

11.5 SEALER:

This is to be applied at all side laps and end laps of roof panels and around self flashing windows. Sealer shall be pressure sensitive elastomeric Butyl tapes. The sealer shall be non-asphaltic, non-shrinking and non toxic and shall be superior adhesive metals, plastics and painted at temperatures from 51°C to +104°C.

11.6 CLOSURES:

Solid or closed cell closures matching the profiles of the panel shall be installed along the eaves, rake and other locations. It should be specifically specified on drawings. The steel sheets shall be provided with hot dip coating of Zinc aluminium alloy (approximately 55% Al, 43.5% Zn and 1.5 % silicon).Total mass of zinc aluminium alloy coating shall be minimum 200 gm/Sq. m inclusive of both sides. The tolerance of base metal thickness (BMT) of steel sheet shall be as per IS 16163. After hot dip coating of Zinc aluminium alloy, the sheet shall be provided with steel primer and silicon modified polyester (SMP) paint. The total thickness of primer and paint shall be 40 microns inclusive of both sides (TCT) comprising of 20 microns of SMP paint on top surface and 10 microns of backer coat (polyester coat) on back surface over 5 microns thick primer each on both surfaces with inorganic pigments coated free from heavy metals. Painting shall conform to IS: 15965. In case SMP paint is not available, Super Durable Polyester paint (SDP) can also be used by the bidder without cost implication to POWERGRID.

11.7 FLASHING AND TRIM:

Flashing and / or trim shall be furnished at the rake, corners, eaves, and framed openings and wherever necessary to provide weather tightness and finished appearance. Colour shall be matching with the colour of wall. The steel sheets shall be provided with hot dip coating of Zinc aluminium alloy (approximately 55% Al, 43.5% Zn and 1.5 % silicon).Total mass of zinc aluminium alloy coating shall be minimum 200 gm/Sq. m inclusive of both sides. The tolerance of base metal thickness (BMT) of steel sheet shall be as per IS 16163. After hot dip coating of Zinc aluminium alloy, the sheet shall be provided with steel primer and silicon modified polyester (SMP) paint. The total thickness of primer and paint shall be 40 microns inclusive of both sides (TCT) comprising of 20 microns of SMP paint on top surface and 10 microns of backer coat (polyester coat) on back surface over 5 microns thick primer each on both surfaces with inorganic pigments coated free from heavy metals. Painting shall conform to IS: 15965. In case SMP paint is not available, Super Durable Polyester paint (SDP) can also be used by the bidder without cost implication to POWERGRID.

11.8 WALL LIGHTS:

For day lighting purpose of GIS hall, minimum 2 mm thick approved translucent polycarbonate sheet shall be provided for wall lighting in addition to windows for at least 10% of wall area on upper portion of both long walls. The polycarbonate sheet shall be fixed with necessary EPDM/rubber gasket, Silicon Sealant, cold forged fastener, aluminum profile etc. including MS supporting structural steel (conforming to IS:1161/4923) frame to ensure water tight arrangement.

11.9 CONNECTIONS:

11.9.1 SITE CONNECTIONS

i) All primary bolted connections shall be provided with galvanized high strength bolts, washers, nuts conforming to specifications of grade 8.8 of IS 1367/IS:3357

ii) All secondary bolted connections shall be furnished with bolts, nuts, washers conforming to the specifications of grade 4.6 of IS 1367 or ASTM-A307.

11.9.2 SHOP CONNECTIONS

All shop connections shall be welded with appropriate arc welding process and welding shall be in accordance with IS: 816, IS -818 ,IS1024, IS:1261, IS1323, IS-9595, AWSD 1.1. as appropriate. The Webs should be welded on to the flanges at both the faces at top and bottom for columns, beams and crane girders. Weld material should have strength more than the parent metal.

11.10 GUTTERS AND DOWN SPOUTS:

Gutters and downspouts shall be adequately designed to ensure proper roof drainage system. The steel sheets shall be provided with hot dip coating of Zinc aluminium alloy (approximately 55% Al, 43.5% Zn and 1.5 % silicon).Total mass of zinc aluminium alloy coating shall be minimum 200 gm/Sq. m inclusive of both sides. The tolerance of base metal thickness (BMT) of steel sheet shall be as per IS 16163. After hot dip coating of Zinc aluminium alloy, the sheet shall be provided with steel primer and silicon modified polyester (SMP) paint. The total thickness of primer and paint shall be 40 microns inclusive of both sides (TCT) comprising of 20 microns of SMP paint on top surface and 10 microns of backer coat (polyester coat) on back surface over 5 microns thick primer each on both surfaces with inorganic pigments coated free from heavy metals. Painting shall conform to IS: 15965. In case SMP paint is not available, Super Durable Polyester paint (SDP) can also be used by the bidder without cost implication to POWERGRID.

~~12.0 VENDORS & MQP FOR PEB BUILDINGS~~

12.1 All the material required for Pre-engineered (steel) building shall be procured from approved vendors as per list of compendium of vendors available on POWERGRID web site or any other reputed manufacturer for which prior approval shall be obtained from POWERGRID.

12.2 Manufacturing of various parts of the building shall start only after approval of "Manufacturing Quality Plan". Design and structural drawings shall be approved by POWERGRID.

12.3 Shop/fabrication showing each and every detail along with bill of material for all members of structures, joints, nuts & Bolts, welding shall be prepared and approved by venders as per standard practice of fabrication based on POWERGRID approved design and structural drawings.

12.4 Complete material shall be offered for inspection by CC (Corporate Centre) QA&I department before dispatch. Inspection of Material by POWERGRID CC QA &I deptt. shall be carried out based on Shop/fabrication drawing and BOM as approved by Vendors. Approval of BOM and shop/fabrication drawings from Employer is not required.

13.0 GENERAL SPECIFICATION FOR BUILDINGS:

These clauses are applicable for Buildings, which are to be constructed as per drawings provided by employer such as CRB, transit camp, residential buildings, switch yard panel room and fire water pump house with fire water tank. Architectural drawings of buildings covered in the scope are enclosed with the tender documents and are also available on website. These drawings are good for construction except for foundation drawings of the buildings which will be issued to the successful bidder after award of work and after receipt of soil investigation report depending upon soil parameters.

This shall also be applicable for vendor designed buildings wherever applicable.

In case of CRB and GIS halls, most of the finishing items are explained in previous clauses, if any of items are missed or may be required for completion of the same, the below mentioned clauses may also be referred.

13.1 The material specification, workmanship and acceptance criteria shall be as per approved standard Field Quality Plan attached with this document which is available on POWERGRID web site. In case certain item is not covered in FQP, it shall be constructed as per CPWD specification.

13.2 Post constructional Anti termite treatment shall be carried out for all buildings as per DSR item no. 2.34 & 2.35. Anti termite chemical treatment shall be given to column pits, wall trenches, foundations of buildings, filling below the floors etc. as per IS: 6313 and other relevant Indian Standards.

13.3 Reinforced cement concrete with controlled water cement ratio as per IS-code shall be used for all underground concrete structures such as pump-house, tanks, and water retaining structures for achieving water-tightness.

13.4 FPS or Modular clay/fly ash based Bricks having minimum 75 kg/cm2 compressive strength can only be used for masonry work. Contractor shall ascertain himself at site regarding the availability of bricks of minimum 75 kg/cm2 compressive strength before submitting his offer. However, Contractor can propose to use aerated concrete block or solid concrete blocks of compressive strength not less than 75kg/cm2 without any cost implication to POWERGRID.

13.5 Full brickwork shall be provided with cement mortar 1:6 (1cement: 6 coarse sand). Half brick work masonry shall be provided with cement mortar 1:4 (1cement: 4coarse sand) and two no 6mm dia ms bar at every third course.

13.6 12mm cement plaster of mix 1:6 (1cement: 6 fine sand) shall be provided on the smooth side of internal walls. However rough side of walls shall be provided with 15mm cement plaster of mix 1:6 (1cement: 6 fine sand).

13.7 External plaster in two coats - 18mm Cement plaster in two coats under layer 12mm thick cement plaster 1:5 (1 cement: 5coarse sand) finished with a top layer 6mm thick cement plaster (1cement : 6 fine sand). External plastered surface shall be finished with white cement based putty of average thickness 1 mm, of approved brand and manufacturer to prepare the surface even and smooth. After putty the walls shall be finished with Premium Acrylic Smooth exterior paint of approved brand and manufacturer with Silicone additives of required shade (Two or more coats applied @ 1.43 ltr/ 10 sqm. over and including priming coat of exterior primer applied @ 2.20 kg/ 10 sqm).

13.8 6 mm thk. Cement plaster of mix 1:3 (1 cement: 3 fine sand) to RCC ceiling shall be done except areas where false ceiling are provided.

13.9 Internal walls shall be finished with Plaster of Paris putty of average thickness 2 mm, of approved brand and manufacture, over the plaster surface to prepare the surface even and smooth complete. In case plastered surface of buildings are covered under wall paneling, dado work, skirting etc. no putty and painting are required.

13.10 Internal walls shall be painted with minimum two coats of premium acrylic emulsion paint having VOC (volatile organic compound) content less than 50gm per litre of approved brand and manufacture including applying additional coats wherever required, to achieve even shade and colour over priming coat as per manufacturer specification/ recommendation.

13.11 Non - VOC premium acrylic emulsion paint having volatile organic compound content less than 50gm per litre of approved brand and manufacture shall be used wherever specified.

13.12 Painting with synthetic enamel paint of approved brand and manufacture of required colour to give an even shade shall be provided on the steel doors, flush doors and rolling shutters in various buildings or as specified in the drawings. Two or more coats over an under coat of suitable shade with primer paint of approved brand and manufacture.

13.13 Two or more coats of French spirit polishing with a coat of wood filler shall be provided on the wooden doors and frames.

13.14 Polished vitrified tiles in 60x60 cm size (thickness to be specified by the manufacturer) in flooring and skirting, with water absorption's less than 0.08% and conforming to IS: 15622 of approved make in all colours and shades, laid on cement mortar 20mm thick min. for flooring & 12mm thick for skirting 1:4 (1 cement: 4coarse sand) including grouting the joints with white cement and matching pigments etc., complete.

13.15 Glazed Ceramic floor tiles 300x300mm (thickness to be specified by the manufacturer) of 1st quality conforming to IS:15622 of approved make in colours as approved by Engineer-in-charge in toilet and pantries area on 20mm thick min. cement mortar 1:4 (1 cement : 4coarsesand) including grouting the joints with white cement and matching pigments etc., complete.

13.16 62 mm thick cement concrete flooring with concrete hardener topping, under layer 50 mm thick cement concrete 1:2:4 (1 cement: 2 fine aggregate : 4 graded stone aggregate 20mm nominal size) and top layer 12mm thick cement hardener consisting of mix 1:2 (1 cement hardener mix: 2 graded stone aggregate, 6mm nominal size) by volume, hardening compound mixed @ 2 litre per 50 kg of cement or as per manufacturer's specifications.

13.17 Cement plaster skirting (up to 15 cm height) with cement mortar 1:3 (1 cement: 3 coarse sand) mixed with metallic concrete hardener in same ratio as for floor finished with a floating coat of neat cement. 21 mm thick in ACDB/DCDB room.

13.18 Granite stone of 18mm thick gang saw cut mirror polished pre-molded and pre-polished, machine cut for of required size of approved shade, colour and texture laid over 20mm thick base cement mortar 1:4 (1 Cement: 4 coarse sand) with joints treated with white cement, mixed with matching pigment, epoxy touch ups, including rubbing, curing molding and polishing to edge to give high gloss finish etc. complete for staircase.

13.19 Granite stone of flooring with 18mm thick gang saw cut mirror polished premoulded and prepolished, machine cut for of required size of approved shade, colour and texture laid over 20mm thick cement mortar 1:4. The joints are filled with jointing compound matching

to the granite. Wherever granite is specified for the floor, 100mm granite skirting shall be provided with the walls. The granite outer surface shall be flushed to the plaster finish of the wall by molding / beveling of granite at top edge.

13.20 Granite counter of approved shade shall be provided and fixed with 18mm thick gang saw cut, mirror polished, premoulded and pre-polished, machine cut for pantry & kitchen platform facias and similar locations of required size, approved shade, colour & texture laid over 20mm thick base cement mortar 1:4 (1cement : 4 Coarse sand) joints treated with white cement, mixed with matching pigment, epoxy touch ups, including rubbing, curing moulding and polishing to edges to give high gloss finish etc complete at all levels.

13.21 Ceramic glazed wall tiles of 1st quality conforming to IS: 15622 (thickness to be specified by the manufacture) of approved make in all colours, shades as approved by Engineer-in-Charge in dados over 12mm thick bed of cement Mortar 1:3 (1 Cement: 3 Coarse sand) and jointing with grey cement slurry @ 3.3kg per sqm including pointing in white cement mixed with pigment of matching shade complete. Height of dado shall be 2.1m high in toilets, kitchen and pantry or elsewhere specified in the drawings or TS.

13.22 Rolling shutters shall be seamless galvalume motorized rolling shutters, with inclusion of features as under:

Slat material (Shutter curtain):	min. 1.0 mm steel slate (Galvalume)
Slat profiles	min. 100mm wide
Side guide	GI side guides min. 75mm Especially design guides with wind locks for high wind velocity exposed shutters. Nylofelt seals fitted on the shutter skin for frictionless movement within the guides.
Bottom profile	Aluminium bottom rail is provided with additional rubber seal for tight closing for prevention of dust entry.
Roller shaft	Roller shaft shall be heavy duty mild steel strong suspension tubular shaft without springs.
Side brackets	M.S. plate 3 mm to 10 mm as per the opening dimension.

Surface Finish & Painting	Primer and Duco paint (Matt finish)
Operations	Electrically operated with motor of suitable capacity along with manual operation by hand chain or hand crank for emergency

13.22 Circular/hexagonal M.S. sheet ceiling fan box shall be provided in the ceiling with clamp of internal dia. 140 mm, 73 mm height, 3 mm thick rim, top and bottom lid of 1.5 mm M.S. Sheet. Lids shall be screwed in to M. S. box by means of 3 mm round headed screws, clamps shall be made of 12 mm dia. M. S. bar bent to shape as per standard drawing with overall length as 80 cm.

13.23 Powder Coated (minimum thickness 50 micron) aluminium work for doors, windows, ventilators and partitions shall be provided and fixed in building with extruded built up standard tubular and other sections of approved make conforming to IS:733 and IS : 1285, fixed with rawl plugs and screws or with fixing clips, or with expansion hold fasteners including necessary filling up of gaps at junctions at top, bottom and sides with required PVC/neoprene felt etc and joined mechanically wherever required including cleat angle, Aluminium snap beading for glazing / panelling, C.P. brass/ stainless steel screws including glazing and fittings as specified.

13.24 All doors except for toilet shall have 100mm 6 lever CP Brass mortice lock . Anodized aluminum handles of ISI marked and approved size shall be provided for all doors and windows as per requirement and instruction of E.I.C.

13.25 Cylindrical keyless lock of 25 mm diameter and 50mm diameter knob on both sides (ISI marked) shall be provided for toilets.

13.26 Kitchen door shall have 250x16mm C.P. brass sliding door bolt.

13.27 Door shall be provided with anodized aluminum tower bolt (barrel type) 250x10mm wherever door closers are not provided.

13.28 All windows shall have aluminum tower bolt (barrel type) 150x10mm as per requirement.

13.29 Double action hydraulic floor spring of approved brand and manufacture confirming to IS: 6315 having brand logo embossed on the body/plate with double spring mechanism and door weight upto 125 kg, for doors shall be provided and fixed at the following door including cost of cutting floors as required, embedding in floors and cover plates with brass pivot and single piece MS sheet outer box with slide plate etc. as per the direction of Engineer-in-charge. With stainless steel cover plate minimum 1.25 mm thickness.

a. Main Entrance to Control Room Building / Transit Camp
b. Control Room

13.30 Aluminium extruded section body tubular type universal hydraulic door closer (having brand logo with ISI, IS : 3564, embossed on the body) with double speed adjustment with necessary accessories and screws etc. complete

b. Substation In charge room.
c. Conference Room
d. bedroom and toilet doors of transit camp
e. Pantry and Kitchen

13.31 Plinth protection 50 mm thick of cement concrete 1:2:4 (1 cement : 2 fine aggregate : 4 graded stone) aggregate 20 mm nominal size) shall be laid over 75 mm bed of dry brick ballast 40 mm nominal size well rammed and consolidated and shall be grouted with fine sand including finishing the top smooth. Minimum width of plinth protection shall be 1000 mm.

13.32 G.S. corrugated sheets of 0.80 mm thick with zinc coating not less than 275 gm/m² roofing shall be provided and fixed with G, I, J or L hooks, bolts and nuts 8mm diameter G, I plain and bitumen washers complete excluding the cost of purlins, rafters and trusses for water tank.

13.33 Cement Jali of (1:2:4) (1 Cement: 2 fine aggregate : 4 coarse aggregate) 50mm thick, shall be reinforced with 1.6mm dia with Mild steel wire including centering and shuttering cleaning fixing and furnishing with cement mortar 1:3).

13.34 Ward Robes of required height and about 600 mm deep shall be made out of 18 mm. thk anti termite treated commercial board ISI marked at end verticals, top and bottom, shutters, partition etc complete. The rear side of the unit shall be made with 6mm thk commercial ply ISI marked, which shall have French spirit polish on the exterior face. Inner surface of the storage cabinet shall be finished with 0.8mm thk approved laminate. The horizontal partition shall be of removable type fixed with necessary SS fittings and hardware. All external surfaces shall be finished with 4.0 mm thk approved veneer with melamine including making necessary grooves, teak wood moulding as per approved drawings. Each shutter shall have piano type stainless steel hinges and C.P. Brass or SS 125mm long handle. The unit shall have necessary fittings such as tower bolts, 4 lever CB locks etc complete.

13.35 Angles 50x50x6 mm (minimum) with lugs shall be provided for edge protection all round cut outs/openings in floor slab.

13.36 Items/ components of buildings not explicitly covered in the specification but required for completion of the project shall be deemed to be included in the scope.

14.0 EXTERNAL WATER SUPPLY FROM BORE-WELL TO FIRE WATER TANK/CONTROL BUILDING AND / OR TRANSIT CAMP:

14.1 The drawing for the water supply from bore-well to fire water tank shall be developed by the Contractor. Water supply will be made available to the Contractor from a bore-well by the Employer at any one location within the sub-station. 80 mm dia CPVC pipe shall be provided by the Contractor from the bore-well to the fire water tank. The underground pipe line shall be laid as per CPWD Specification. The ball valve, NRV etc. shall be provided as per requirement. From this pipe line a 25 mm dia tap off shall be connected by the Contractor to the roof water tank provided for the control room building & transit camp.

14.2 The Contractor shall carry out all the external plumbing/erection works required for supply of water to the control room building, firewater tank and/ or transit camp beyond the single point as given at 14.1.

14.3 A scheme shall be prepared by the Contractor indicating the layout and details of water supply which shall be got approved from the Employer before actual start of work including all other incidental items not shown or specified but as may be required for complete performance of the works.

14.4 Bore well is not in the scope of Contractor.

15.0 SUBMISSION:

The following information shall be submitted for review and approval to the Employer:

15.1 Editable Soft as well as hard copies of structural design calculations and structural drawings (including construction/fabrication) for all reinforced concrete and structural steel structures.

15.2 Fully, dimensioned concept plan including floor plans, cross sections, longitudinal sections, elevations and perspective view of each building. These drawings shall identify the major building components. Auto cad drawings shall also be submitted.

15.3 Fully dimensioned drawings showing details and sections drawn to scales of sufficient size to clearly show sizes and configuration of the building components and the relationship

between them.

15.4 Product information of building components and materials, including walls partition flooring ceiling, roofing, door and windows and building finishes to be submitted to EIC.

15.5 A door & window schedule showing door types and locations, door lock sets and latch sets and other door hardware. Approval of the above information shall be obtained before ordering materials or starting fabrication or construction as applicable.

16.0 MISCELLANEOUS REQUIREMENTS:

16.1 All joints including construction and expansion joints for the water retaining structures (RCC tank for Fire Fighting and underground water tank) shall be made water tight by using PVC ribbed water stops with central bulb. The minimum thickness of PVC water stops shall be 5 mm and minimum width shall be 230 mm.

16.2 All mild steel parts used in the firefighting water tank and underground water tank shall be hot-double dip galvanised. The minimum coating of the zinc shall be 750 gm/sq. m. for galvanised structures and shall comply with IS:2628 and IS:2633. Galvanizing shall be checked and tested in accordance with IS: 2633. The galvanizing shall be followed by the application of an etching primer and dipping in black bitumen in accordance with BS: 3416. The structural steel provided for roofing shall have enamel paint of approved shade two or more coat to give even shade over steel primer.

16.3 Angles 50x50x6 mm (minimum) with lugs shall be provided for edge protection all round cut outs/openings in floor slab.

16.4 For sump pit of switch yard Horizontal type submersible type pump as per BOQ rating having level switch shall be provided.

16.5 The material specification, workmanship and acceptance criteria shall be as per approved standard Field Quality Plan attached with this document which is available on POWERGRID web site. In case certain item is not covered in FQP, it shall be constructed as per CPWD specification.

16.6 Items/ components of buildings not explicitly covered in the specification but required for completion of the project shall be deemed to be included in the scope.

16.7 CABLE TRANSIT SYSTEM

Modular multi-diameter cable sealing system consisting of frames, blocks and accessories shall be installed where the underground and over ground cables enter or leave concrete bay kiosks/switchyard panel room & control rooms in the substations. Cable transit system

shall consist of multi-diameter type peel-able/adjustable blocks of different sizes to suit the various cables. It should be simple, easy and quick to assemble & re-assemble the cable sealing system. Solid blocks shall not be used on frame. Frames & stay-plate material shall be of galvanized steel and for compression single piece wedge with galvanized steel bolts shall be used. 30% spare blocks of all sizes on the frame shall be provided for expansion in future. Cable sealing system should have been tested for fire/water/smoke tightness.

16.8 For communication Room GI Pipe of 40 mm dia shall be laid below floor to extend communication cable coming from switchyard via ACDB/DCDB Room.

17.0 INTERFACING:

The proper coordination & execution of all interfacing civil works activities like fixing of conduits in roofs/walls/floors, fixing of foundation bolts, fixing of lighting fixtures, fixing of supports/embedment, provision of cut outs etc. shall be the sole responsibility of the Contractor. He shall plan all such activities in advance and execute in such a manner that interfacing activities do not become bottlenecks and dismantling, breakage etc. is reduced to minimum.

18.0 STATUTORY RULES:

18.1 Contractor shall comply with all the applicable statutory rules pertaining to factories act (as applicable for the State), Fire Safety Rules of Tariff Advisory Committee, Water Act for pollution control etc.

18.2 Statutory clearance and norms of State Pollution Control Board shall be followed as per Water Act for effluent quality from plant.

18.3 Requirement of sulphate resistant cement (SRC) for sub structural works shall be decided in accordance with the Indian Standards based on the findings of the detailed soil investigation. In case sulphate resistant cement is used as per requirement, differential cost between sulphate resistant cement and PPC cement shall be payable as an extra item.

18.4 All building/construction materials shall conform to the best quality specified in CPWD specifications if not otherwise mentioned in this specification.

18.5 All tests as required in the standard field quality plans have to be carried out without any financial implication to employer.

19.0 SPECIFICATION FOR SITE LEVELLING WORK

19.1 SCOPE OF WORK AND GENERAL CONDITION

This specification shall apply to site levelling works as are required to be executed under the Contract or otherwise directed by the Engineer-in-Charge. All testing shall be carried out as per standard field quality plan of POWERGRID**.**

Site levelling work shall consist of clearance of site, excavation in all kinds of soils, soft/disintegrated rock, hard rock, dewatering, transporting of excavated earth, filling, consolidation of earth, levelling benching, giving slopes and making formations, levelling operations, removal and satisfactory disposal of unsuitable materials necessary for achieving desired formation level, if required, in accordance with the requirements of the specifications and the lines, grades and cross-sections shown in the drawings or indicated by the Engineer-in-Charge. The work shall include the hauling and stacking of or the hauling to levelling site, of suitable materials as required, as also the disposal of unsuitable materials in specified manner; and the trimming and finishing of works.

This work also includes cutting of diversion channel to prevent the area from flooding and construction of kuchcha surface drains for drainage of the area.

The quality of work and materials shall comply with the requirements set forth in the succeeding sections. Where the drawings and Specifications describe a portion of the work only in general terms, and not in complete details, it shall be understood that only the best general practice is to prevail, materials and workmanship of the best quality are to be employed and the instructions of the Engineer-in-Charge are to be fully complied with.
The work to be performed under this specifications consists of providing all labour, supervision, materials, planking and strutting, power, fuel, construction equipments, tools and plants, supplies, transportation, blasting materials if required, storage, insurance, royalty and all incidental items not shown or specified by reasonably implied or necessary for successful completion of work including contractor's supervision and in strict accordance with drawing and specifications.

The scope may however vary based on the specific requirement of various works/site, which shall be specified by the Owner.

The work shall be executed according to "Released for Construction", drawings with additions, alterations and modifications made from time to time as required or approved by the Engineer-in-Charge and also according to any other drawings that would be supplied to the Contractor progressively during the execution of the Contract.

Construction traffic shall not use the levelled area without prior permission of the Engineer-in-Charge. Any damage arising out of such use shall be made good by the Contractor at his own expense.

The words like Contract, Contractor, Engineer-in-Charge, Drawings, Owner, works, site used in this Specifications shall be considered to have the meaning as understood from the definition of these terms included in the General Conditions of Contract.

19.2 PRESERVATION OF PROPERTY/AMENITY**:**

The Contractor shall undertake all reasonable precautions for the protection and preservation of Trees, shrubs, any other plants, pole lines, fences, signs, monuments, buildings, pipelines, sewers or other subsurface drains, pipes, conduits and any other structures under or above ground, which may be affected by construction operations and which in the opinion of the Engineer-in-Charge shall be continued in use without any change.

The Contractor shall provide and install at his own expenses, suitable safeguards approved by the Engineer-in-Charge for this purpose. However, if any of these objects is damaged by reason of the Contractor's negligence, it shall be replaced or restored to the original condition without any financial implication to POWERGRID.

19.3 DISPOSAL OF MATERIALS**:**

All materials arising from jungle clearing, grubbing operation, all type of excavation etc. shall be the property of Power Grid and shall be disposed of by the Contractor as hereinafter provided or directed by the Engineer-in-Charge within a lead of 2000 m beyond the periphery of substation area. Also boulders, stones and other materials usable shall be neatly stacked.

All products of clearing and grubbing which in the opinion of the Engineer-in-Charge cannot be used or auctioned shall be cleared away to waste areas and burnt, if so desired, at locations away to a lead mentioned above in a manner as directed. Care shall be taken to see that unsuitable waste materials are disposed of in such a manner that there is no likelihood of these getting mixed up with the materials meant for filling.

Where the excavated material is directed to be used in the filling area, it shall be directly deposited at the required location complying with the total requirements. All disposed material other than hard material shall be spread in layers at the places within specified leads.

All hard materials, such as hard moorum, rubble, etc., not intended for use in the filling, shall be stacked neatly on POWERGRID land as directed by the Engineer-in-Charge, for future use.

Unsuitable and surplus materials not intended for use in any part of the works shall be disposed off.

19.4 SITE CLEARANCE

The work shall consist of numbering of trees, removing and disposing of all materials such as trees, bushes, woods, shrubs, grass, stumps, rubbish, rank vegetation, roots, foreign materials, etc., which in the opinion of the Engineer-in-Charge are unsuitable for incorporation in the works, from within the limits and areas as may be specified by the Engineer-in-Charge.

All trees up to a girth (perimeter) of 30 cm measured at one metre above the ground level shall also be cut and useful portion of the trees so cut shall be stacked at a suitable place as directed by the Engineer-in-Charge and shall be considered incidental to clearing and grubbing operations.

The roots of trees shall be dug up to 60 cm below the ground level or 15 cm below formation level whichever is deeper and after removal of all vegetable and organic matter from the holes so formed by removal of the roots, holes and hollows shall be filled with good earth in layer of 20 cm, well rammed, consolidated and levelled.

The serviceable and unserviceable materials obtained from the site clearance shall be removed from the area and disposed of to a place as per the directions of the Engineer-in-Charge. All unserviceable and serviceable materials obtained from the site clearance shall be the property of POWERGRID.

Clearing and grubbing item is not payable and the same shall be deemed to be included in the earth work in excavation and filling.

~~Trees having girth above 30 cm are not in the scope of Contractor.~~

19.5 CLASSIFICATION OF EXCAVATED MATERIALS:

All materials involved in excavation shall be classified in the following groups:

19.5.1 ALL KIND OF SOILS AND SOFT/DISINTEGRATED ROCK

The material which can be quarried/excavated with pick, shovels, jumpers, scarifiers, crowbars etc. and other mechanical implements. All materials involved under this classification are as below:

All kind of soils includes various types of soils, plain concrete, shingle and river or nallah bed boulders, soling of road, paths and hard core, macadam surface of any description, stone masonry below the ground level, soft conglomerate and laterite stone which can be detached from the matrix with picks and shovel.

Soft/disintegrated Rock (Not requiring blasting): Rock and boulders which may be quarried and split with crow bars and other mechanical implements etc. It includes lime stone, sand stone, hard conglomerate.

19.5.2 HARD ROCK:

All kind of rocks which can be excavated by machines and requires blasting chiselling in edging or in another agreed method. This can be classified under the following categories:

a) Hard Rock (Requiring Blasting)-This shall comprise:

   i) Any rock for the excavation of which the use of mechanical plant or blasting is required;
   ii) Reinforced cement concrete (reinforcement cut through but not separated from the concrete) below ground; and
   iii) Boulder requiring blasting.

b) Hard Rock (Blasting Prohibited)

Hard rock requiring blasting as described under (a) above but where blasting is prohibited for any reason and excavation has to be carried out by chiselling, wedging or any other agreed method.

19.5.3 AUTHORITY FOR CLASSIFICATION EXCAVATION:

The classification of excavation shall be decided by the Engineer-in-Charge and his decision shall be final and binding on the Contractor. Merely the use of explosives in excavation will not be considered as a reason for higher classification unless blasting is clearly necessary in the opinion of the Engineer-in-Charge. All the excavated material shall be the property of the POWERGRID.

19.6 SITE LEVELLING OPERATIONS:

19.6.1 SETTING OUT AND MARKING PROFILES**.**

After the site has been cleared, the limits of site levelling shall be set out true to lines, curves, slopes, grades and sections as shown on the drawings or as directed by the

Engineer-in-Charge. The Contractor shall provide all labour, survey instruments and materials such as strings, pegs, nails, bamboos, stones, lime, mortar, concrete, etc., required in connection with the setting out of works and establishment of bench marks. A grid system of co-ordinates shall be established by the Contractor at the site. The Contractor shall be responsible for the maintenance of permanent reference pillars, bench marks and other marks and stakes as long as in the opinion of the Engineer-in-Charge they are required for the work. All such marks/pillars shall be removed by the Contractor at his own cost as soon as the purpose is over.

Masonry pillars shall be erected at suitable places in the area to serve as bench marks for the execution of the work. These bench marks shall be connected with G.T.S. of any other permanent bench mark approved by the Engineer-in-Charge. Necessary profiles with pegs, bamboos and strings or "*Burgeis*" shall be made to show the correct formation levels before the work is started and the same shall be approved by the Engineer-in-Charge. The contractor shall supply all labour, tools, equipment, materials, safeguards and incidentals necessary for setting out and making profiles and burgeis & pillars for the work at his own cost. The profiles and burgeis shall be maintained during the execution of the work.

Marks/pillars shall invariably be diagonal unless otherwise directed, and should be such that their average height is representative of average depths. Payments will be made on the basis of volume measurement after with-holding the amount corresponding to 5% of the volume of earth work on account of non-removal of marks/pillars.

The Contractor shall have to remove the marks/pillars and utilise the earth spoils as per the directions of the Engineer-in-Charge. The withheld amount as stated in the above paragraph may be paid after certification of the Engineer-in-Charge; regarding his full satisfaction and to the effect that the mark/pillars, etc. have been removed and soils/earth thereof has been utilised as directed by him.
If the contractor fails to remove, partly or fully the marks/pillars in the manner and within the period as aforesaid double the amount spent by the owner for removal of marks/pillars will be recovered from dues payable to the contractor.

19.6.2 EXCAVATION AND FILLING

All excavations shall be carried out in conformity with the directions laid herein under and in a manner approved by the Engineer-in-Charge. The work shall be so done that the suitable materials available from excavation are satisfactorily utilised as decided upon before disposal.

While planning or executing excavation, the Contractor shall take all adequate precautions against soil erosion, water pollution, air pollution etc.

The excavations shall conform to the lines, grades, side slopes and levels shown on the drawings or directed with a negative tolerance of 100mm. The Contractor shall not excavate outside the slopes or below the established grade or loosen any material outside the limits of excavation. Subject to the permitted tolerances, any excess depth excavated below the specified levels shall be made good at the cost of the Contractor with suitable material of similar characteristics and compacted to the required density and to the satisfaction of the Engineer-in-Charge.

All debris and loose material on the slopes of cuttings shall be removed.

Cutting shall be done from top to bottom. Under no circumstances undermining or undercutting shall be allowed. Final surface shall be neatly dressed. The earth from cutting shall be directly used for filling and no extra claim for double handling of earth shall be admissible to the contractor.

If cutting be taken deeper, it shall be brought to the required level as per the instructions, by filling it with the earth and duly consolidating at the Contractor's cost.

Filling shall be done in regular horizontal layers not exceeding 20 cm. in depth. The earth shall be free from all roots, grass, rubbish and humps and clods exceeding 80mm in any direction shall be broken. Each layer shall be consolidated by breaking clods and Compacting each layer with wooden /steel rammer or movement of dozers, trucks or 8/10 tonne power road rollers, sheep foot roller and vibratory compactors etc. so that compaction of 95% of the maximum dry density is achieved at optimum moisture content. The surface finished shall be neatly dressed to the required formation levels with tolerance of (±) 100 mm.

Tests for Compaction are to be performed as per the procedures laid down in the relevant I.S. Codes of practice and Standard Field Quality Plan of POWERGRID. In cases of compaction below the stipulated percentage, the contractor shall adopt proper techniques as directed by the Engineer in-Charge and to his satisfaction to ensure the specified degree of compaction. The cost of tests to be performed shall be borne by the Contractor.

During the execution of work, natural drainage of the area shall be maintained by the contractor.

19.6.3 HARD ROCK EXCAVATION

Hard Rock, when encountered during excavation, shall be removed up to the finished ground level or as indicated on the drawings. In all cases, the excavation operations shall be so carried out that at no point on cut formation the rock protrudes above the specified levels, provided, however, that a negative tolerance of 150 mm shall be permissible.

Slopes in rock cutting shall be finished to uniform lines corresponding to slope lines shown on the drawings or as directed by the Engineer-in-Charge. Notwithstanding the foregoing, all loose pieces of rock on excavated slope surface which move when prised by a crowbar shall be removed.

Blasting shall be carried out as per relevant clause mentioned elsewhere in this specification and all precautions indicated therein to be observed.

19.6.4 DEWATERING

If water is met with in the excavation due to stream flows, springs, seepage, rain or other causes, it shall be removed by suitable diversions, pumping or bailing out and other excavation kept dry whenever so required or directed by the Engineer-in-Charge, Care shall be taken to so discharge the drained water as not to cause damage to the works, crops or any other property. No extra payment shall be admissible to the contractor on this account.

19.6.5 FINISHING OPERATIONS

Finishing operations shall include the work of properly shaping and dressing all excavated surfaces. When completed, no point on the slopes shall vary from the designated slopes by more than 150 mm measured at right angles to the slope, except where excavation is in rock where no point shall vary more than 600 mm from the designated slope. In no case shall any portion of the slope encroach on the road way.

19.7 EARTH FILL MATERIAL:

19.7.1 SUITABLE MATERIAL

The borrowed earth used in filling shall be free from all roots, grass, shrubs, rank vegetation, brush wood, tree sapling and rubbish.

19.7.2 UNSUITABLE MATERIAL

Unsuitable material shall mean materials unsuitable for placing as fill in the works and shall comprise:

a) Material from swamps, marshes and bogs;
b) Peat, logs, stumps and perishable materials;
c) Material susceptible to spontaneous combustion;
d) Any natural material or industrial and domestic produce which will adversely affect other materials in the work;
e) Clay with liquid limit exceeding 80% and/or plasticity index exceeding 55%.

19.7.3 SPREADING AND COMPACTION OF FILLING

For the earth works contractor shall satisfy the Engineer-in-Charge that the entire specified requirement regarding compaction can be achieved. Testing shall be carried out as per standard field quality plan of POWERGRID.

The Final formation shall be correct in level and profile after compaction.

In the case of earth work consolidated under optimum moisture conditions, each layer of earth shall be carefully moistened to give field moisture content of about + 1% to - 2% of the optimum moisture content (OMC). The OMC shall be determined according to IS: 2720 (Pt.VII &VIII) Methods of Tests for Soils.

Each layer shall then be compacted by rolling with wooden/ steel rammer or movement of dozers, trucks, 8/10 tonnes power road roller, sheep foot roller and vibratory compactors/roller. The required amount of water shall be added during consolidation to keep the moisture content of the soil at the optimum as per test. The density to be achieved for each layer of the material shall not be less than 95% of the density obtained in the laboratory (Proctor Method).

Control on compaction in the field shall be exercised through frequent moisture content and density determinations. A systematic record of these shall be maintained. At all times during construction the top of the embankment shall be maintained at such cross fall as will shed water and prevent pounding.

19.8 BLASTING OPERATIONS**.**

19.8.1 GENERAL

Blasting shall be carried out only with the written permission of the Engineer-in-Charge. All the statutory laws, regulations, rules, Indian Standards, etc., pertaining to the acquisition, transport, storage, handling and use of explosives shall be strictly followed.

The Contractor may adopt any method or methods of blasting consistent with the safety and job requirements, after approval from the Engineer-in-Charge and shall muffle the blasting adequately to the satisfaction of the Engineer-in-Charge. Blasting should be carried out as far as possible with the help of Ammonium Nitrate mixed with proper proportions of fuel oil which is a safer method. However, in the event of its non-availability the convenient practice of using gelatine with detonators can be resorted to.

The magazine for the storage of explosives shall be built to the designs and specifications of the Explosives Department concerned and located at the approved site. No unauthorised person shall be admitted into the magazine which when not in use shall be kept securely locked. No matches or inflammable material shall be allowed in the

magazine. The magazine shall have an effective lightning conductor. The following shall be hung in the lobby of the magazine.

a) A copy of the relevant rules regarding safe storage both in English and in the language with which the workers concerned are familiar,
b) A statement of up to date stock in the magazine,
c) A certificate showing the last date of testing of the lightning conductor,
d) A notice that smoking is strictly prohibited.

In addition to these, the Contractor shall also observe the instructions in following clauses and any further additional instructions which may be given by the Engineer-in-Charge and shall be responsible for damage to property and any accident which may occur to workmen or the public or the materials on account of any operations and blasting. The Engineer-in-Charge shall frequently check the Contractor's compliance with these precautions.

19.8.2 MATERIALS, TOOLS AND EQUIPMENT.

All the materials, tools and equipment used for blasting operations shall be of approved type and shall be arranged by the contractor from any authorised dealer of such approved material. Necessary assistance in the form of approval for procurement of the material shall be given by the Corporation. The contractor shall be fully responsible for entering into the agreement with any authorised magazine contractor in respect of rates, regularity of supply, etc. the Engineer-in-Charge may specify the type of explosives to be allowed in special cases. The fuse to be used in wet locations shall be sufficiently water-resistant as to be unaffected when immersed in water for 30 minutes. The rate of burning of the fuse shall be uniform and definitely known to permit such a safe length being cut as will permit sufficient time to the firer to reach safety before explosion takes place. Detonators shall be capable of giving effective blasting of the explosives. The blasting powder, explosives, detonators fuses, etc., shall be fresh and not damaged due to damp, moisture or any other cause. They shall be inspected before use and damaged articles shall be discarded totally and removed immediately.

19.8.3 PERSONNEL

The blasting operation shall remain in the charge of competent and experienced supervisor and workmen who are thoroughly acquainted with the details of handling explosives and blasting operations.

19.8.4 BLASTING OPERATIONS.

The blasting shall be carried out during fixed hours of the day preferably during the mid-day lunch hour or at the close of the work as ordered in writing by the Engineer-in-Charge. The hours shall be made known to the people in the vicinity. All the charges shall be

prepared by the man in charge only. Proper precautions for safety of persons and property shall be taken.

Red danger flags shall be displayed prominently in all directions during the blasting operations. People, except those who actually light the fuse shall be prohibited from entering this area. The flags shall be planted 200 metres from the blasting site in all directions and all persons including workmen shall be excluded from the flagged area at least 10 minutes before the firing, a warning whistle being sounded for the purpose.
The charge holes shall be drilled to required depths and in suitable places. Blasting should be as light as possible consistent with thorough breakage of the material necessary for economic loading and hauling. Any method of blasting which leads to overshooting shall be discontinued.

When blasting is done with powder, the fuse cut to the required length shall be inserted into the hole and the powder dropped in. The powder shall be gently tamped with copper rods with rounded ends. The explosive powder shall then be covered with tamping material which shall be tamped lightly but firmly.

At a time, not more than 10 such charges will be prepared and fired. The man in charge shall blow a whistle in a recognised manner for cautioning the people. All the people shall then be required to move to safe distances. The charges shall be lighted by the man in charge only. The man in charge shall count the number of explosions. He shall satisfy himself that all the charges have been exploded before allowing the workmen to go back to the work site.
When blasting is to be carried out in the proximity of other existing structures, sand/earth bags, etc. shall be used on the top of the blast holes to prevent the rock fragment from causing damage to the structures.

However, when blasting is prohibited for any reasons the excavation shall be carried out by chiselling, wedging or any other agreed method.

19.8.5 MISFIRE

In case of misfire, the following procedure shall be observed:

i) Sufficient time shall be allowed to account for the delayed blast. The man in charge shall inspect all the charges and determine the missed charges.
ii) If it is the blasting powder charge it shall be completely flooded with water. A new hole shall be drilled at about 45 cm. from the old hole and fired. This should blast the old charge. Should it not blast the old, the procedure shall be repeated till the old charge is blasted.
iii) If a misfire has been found to be due to defective detonator, the whole quantity in the box from which defective article was taken must be sent to the authority directed by the Engineer-in-Charge for inspection to ascertain whether all the remaining materials

in the box are also defective.

19.8.6 ACCOUNT.

A careful and day to day account of the explosives shall be maintained by the Contractor in an approved register and manner which shall be open to inspection by the Engineer-in-Charge at all times.

19.9 RECORDING OF MEASUREMENTS

The ground levels shall be taken at every 5 metres distance and at closer distances where pits, undulations, etc. are met with. The ground level shall be recorded in field book, plotted on plans and shall be signed by contractor and the Engineer-in-Charge before the earth work is started.

The levels of the area after excavation shall be recorded in the field book duly signed by the Engineer-in-Charge and contractor. The labour, materials, tools, equipment, safeguards and incidentals required for taking levels shall be supplied by the contractor at his own cost.

All measurements shall be made in the metric system. Different items of work shall be measured in accordance with the procedures set forth in the relevant sections.

All measurements and computations, unless otherwise indicated, shall be carried nearest to the following limits:

a)	Length and breadth	-- 10 mm
b)	Height, depth or thickness of work	-- 5 mm
c)	Area	-- two places of decimal
d)	Cubical qty.	-- two places of decimal

20.0 MODE OF MEASUREMENT **20.1 to 20.26 APPLICABLE**

Mode of measurement for different items is given below, however, in case of any ambiguity relevant part of IS: 1200 (latest) shall be referred.

20.1 EARTHWORK

This shall include excavation in all kinds of soil including rock, all leads and lifts including back filling, compacting, dewatering (if required) and disposal of surplus earth/ rock to a suitable location within a lead up to two km. Excavation or dismantling of lean concrete shall be measured under this item. The quantity of excavation for foundations of towers, equipment structures, all transformers, firewall, cable trenches, water tank, reactors, buildings, marshalling kiosks, underground water tanks and covered car parking shall only be measured. The quantity of excavation for roads, rail cum road, drains, culverts, rainwater harvesting, septic tank, soak pit, external water supply system, site surfacing,

chain link fencing (including gate) shall not be measured separately and shall be deemed to be included in the composite rates quoted by the bidder for the respective works. All other excavation required for the completion of the work including fixing of lamp posts/ electric poles, plinth protection, flooring, sewerage system, manholes, pipes, earth mat, pipe support etc. shall also not be paid for. The measurement of excavation for all concrete works shall be made considering dimension of the pit keeping 150mm gap around the base pad (lean concrete) or actually excavated pit, whichever is less. For hard rock excavation, the volume of hard rock shall be computed on the basis of stacks of excavated rubble after making 50% deduction for voids. The unit of measurement shall be in cubic meter. The unit rate shall include stacking, disposal of excavated material for leads up to 2000 meters beyond the levelling boundary.

The quantity shall be measured in cubic meters as per following details:

a) Excavation in all kind of soil including soft/ disintegrated rock, PCC, WBM, Brickwork/ stone masonry etc (excluding hard rock).

b) Excavation in hard rock (required blasting)

20.2 PLAIN CEMENT CONCRETE (PCC)

Providing and laying Plain Cement Concrete of all types and at all locations including all leads and lifts. The quantity shall be measured in cubic meters as per lines and levels indicated in the drawings.

20.2.1 PCC 1:2:4 (1 cement : 2 fine aggregate : 4 coarse aggregate 20 mm nominal size) shall be measured in flooring of buildings, plinth protection, fencing, transformer foundation, reactor foundation, rail track, drain, culverts, septic tank, chain link fencing, gate etc. as indicated in the drawings.

20.2.2 PCC 1:3:6 (1 cement : 3 fine aggregate : 6 stone aggregate, 40mm nominal size) shall be measured below all foundations including buildings, underground water tanks, covered car parking cable trench, roads, under flooring, rail-cum-road, transformer foundation, reactor foundation, drain, water tank, culverts, gate, tower/equipment etc. as indicated in the drawings.

20.2.3 PCC 1:4:8 (1 cement : 4 fine aggregate : 8 stone aggregate, 40mm nominal size) shall be measured below all foundations including buildings, underground water tanks, covered car parking cable trench, roads, under flooring, rail-cum-road, transformer foundation, reactor foundation, drain, water tank, culverts, gate, tower/equipment etc. as indicated in the drawings.

20.2.4 PCC 1:5:10 (1 cement: 5 fine aggregate: 10 brick aggregate/ stone aggregate 40mm nominal size) shall be provided for site surfacing in switchyard. This shall include providing and laying cement slurry in case of site surfacing in switchyard.

All other PCC required for the completion of the work including hold fasts of doors/windows/rolling shutters, fixing of plumbing pipes, bedding concrete for sewer lines, embedment of electrical conduits, water proofing of roof etc. shall not be measured and deemed to be included in the composite rates quoted by the bidder for respective works. Water proofing compound wherever specified shall be added without any extra cost.

20.3 RCC

Measurement of reinforced cement concrete at all locations shall be made and shall include all leads, lifts, formwork, grouting of pockets and underpinning. This shall also include pre-cast RCC work and addition of water proofing compound & admixtures wherever required for which no additional payment shall be made. The quantity shall be measured in cubic meters as per lines and levels indicated in the drawings. No deduction shall be made for volume occupied by reinforcement/inserts/sleeves and for openings having cross-sectional area up to 0.1 sq.m.

20.4 REINFORCEMENT STEEL

Reinforcement shall be measured in length (actual or theoretical as per drawing whichever is less) including hooks, if any, separately for different diameters as actually used in work, excluding overlaps. From the length so measured, the weight of reinforcement shall be calculated in tons on the basis of sectional weights as adopted by Indian Standards. Wastage, overlaps, couplings, welded joints, spacer bars, chairs, stays, hangers and annealed steel wire or other methods for binding and placing shall not be measured and cost of these items shall be deemed to be included in the rates for reinforcement.

20.5 STONE FILLING

Measurement of stone (40-60mm size) for transformer/ reactor foundations shall be made as per theoretical volume of the space to be filled in the transformer foundation as per drawings. This shall be measured in cu.m. no voids shall be deducted.

20.6 MISCELLANEOUS STRUCTURAL STEEL

Measurement for Supply, fabrication, transportation and erection of all miscellaneous structural steel work for mono rails (RS joists), rails for transformers/ reactors, trusses, frame work, purlins, gratings including factory made electro forged gratings, steel tubes, built up sections along with all other steel fittings and fixtures, inserts and embedment in concrete shall be made as per drawings. The unit rate for this item shall be inclusive of cutting, grinding, drilling, bolting, welding, pre- heating of the welded joints, applying a priming coat of steel primer / anti corrosive bitumastic paint/ synthetic enamel paint etc. wherever specified (For gratings and its supports epoxy zinc phosphate primmer shall be used) setting of all types of embedment in concrete, etc. Steel required for foundation

bolts & fasteners (other than towers and equipment support structures), doors, windows, ventilators, louvers, rolling shutters, chain link fencing, gratings in drains, soil pipes, plumbing pipes, floor traps, embedment's required for rainwater harvesting, septic tank, soak pit, roof truss and purlins required for fire water tank, steel structures of PEB buildings, etc. shall not be considered for payment and measurements. Quantity shall be measured in MT.

20.7 ROADS

20.7.1 The measurement for the concrete road shall be made on the basis of area in square meter (M^2) of top concrete completed surface of the road and shall be deemed to include all items such as earth work (excavation, disposal etc.), compaction, rolling, watering, WBM, Kerb stone, grating, shoulder, 100mm dia RCC Hume pipe to be provided at every 100M etc where ever indicated complete as per drawing. Concreting all type and reinforcement shall be measured and paid separately under relevant items mentioned else where in this specification. Usage of WMM in place of WBM shall be done with approval of employer without any additional financial implication.

20.7.2 The measurement of bituminous road shall be made on the basis of area in square meter (M^2), of the top bituminous completed surface of the road and shall include all items such as earth work (excavation, disposal etc.), compaction, rolling, watering, WBM, Kerb stone, grating, shoulder, 100mm dia RCC Hume pipe to be provided at every 100M etc where ever indicated complete as per drawing including premix carpet etc complete .Usage of WMM in place of WBM shall be done with approval of employer without any additional financial implication.

20.7.3 Interlocking concrete tiles required to be provided on the shoulders of the road shall be measured in square meter (M^2) and paid separately under relevant item.

20.8 ANTIWEED TREATMENT

The measurement shall be done for the actual area in square metres of antiweed treatment which will include supplying required chemicals and doing the treatment complete in all respect as per the specification for the specified area.

20.9 STONE SPREADING IN SWITCHYARD

The measurement shall be done for the actual area in square meters of stone spreading in the switchyard which will include supplying and laying of 100mm thickness of stone aggregate as per specification for the specified area.

20.10 CHAIN LINK FENCING AND GATE

The measurement shall be made in running metres of the fence provided as per drawing. The rate shall be inclusive of post, wire mesh, MS Flat etc. complete. All concrete shall be measured and paid under relevant item. The gate shall be measured in numbers.

20.11 CABLE TRENCH CROSSING AND ROAD CULVERTS THROUGH HUME PIPES

Cable trench crossings and road culverts shall be measured by length (in running meters) of individual Hume pipe which will be laid as per the drawings. The item shall be inclusive of earth work (excavation, backfilling, disposal etc.), laying, back filling, jointing, brickwork, plastering etc complete in all respect but excluding concrete (all type)which will be measured and paid separately under respective items.

20.12 BUILDINGS:

20.12.1 RCC FRAMED STRUCTURE BUILDINGS:

Payment for item shall be made on plinth area basis. However, the quantity of earth work (excavation, backfilling, disposal etc.), concrete (all type), reinforcement steel shall be measured and paid as per relevant clauses as described above. The rest of the entire work (including internal & external finishing), stone soling for flooring, plinth protection, drain along plinth protection, electrical conduit & junction boxes, fan boxes, cable transit system etc. required to complete the building in all respect as per the drawings furnished by the Employer shall be deemed to be included in the plinth area rate. Plinth area shall be calculated based on IS 3861-2002.

20.12.2 PRE-ENGINEERED STEEL BUILDINGS:

a) GIS HALL
b) AHU & RELAY ROOM

The quantity of earth work (excavation, backfilling, disposal etc.), concrete (all type), reinforcement steel shall be measured & paid separately as per relevant clauses as described above. Plinth area shall be calculated based on IS 3861-2002. However, payment for remaining finishing items a), b) & c) shall be made on plinth area basis for each building including internal foundations, cable trenches, internal & external finishes, stone soling for flooring, plinth protection, drain along plinth protection, electrical conduit & junction boxes, fan boxes, cable transit system, miscellaneous structural steel required for seating of GIS equipments, cable supports in cable trenches, chequered plates etc inside GIS building. complete in all respect.

20.12.3 EXTENSION OF RCC /PEB BUILDINGS:

a) CONTROL ROOM BUILDING

b) GIS HALL

c) AHU & RELAY ROOM

The quantity of earth work (excavation, backfilling, disposal etc.), concrete (all type), reinforcement shall be measured and paid as per relevant clauses as described above. Plinth area shall be calculated based on IS 3861-2002. However, payment for above items a), b) & c) shall be made on plinth area basis for each building including internal foundations, cable trenches, internal & external finishes, stone soling for flooring, plinth protection, drain along plinth protection, electrical conduit & junction boxes, fan boxes, cable transit system wall dismantling works, miscellaneous structural steel required for seating of GIS equipments, cable supports in cable trenches, chequered plates etc inside GIS building complete in all respect.

20.12.4 INTERNAL ELECTRIFICATION AND FIRE FIGHTING:

Payment for internal electrification as well as internal firefighting works is not included in items covered in clauses above and shall be paid as per relevant clauses and BPS. However, conduit, junction boxes, surface boxes for electrification, cable transit system is deemed to be included in the building items.

20.13 RAIN WATER HARVESTING

This is a lump sum item. The Contractor shall be required to complete the work in all respect as per drawings furnished by the Employer. All the items including earth work (excavation, backfilling, disposal etc.), miscellaneous steel, brick work, fillings of boulders, gravel, sand, pipes etc. shall be deemed to be included in this lump sum rate. However, the concrete (all types) and the reinforcement shall be measured and paid under the relevant clauses as mentioned above.

20.14 RAIL CUM ROAD

The measurement for the rail cum road shall be made in square metres of top concrete completed surface of the rail cum road and shall include all items such as earth work (excavation, backfilling, disposal etc.), compaction, rolling, watering, WBM etc. complete as per drawing but excluding concrete (all type), reinforcement, structural steel and rails. Usage of WMM in place of WBM shall be done with approval of employer without any additional financial implication.

20.15 SEPTIC TANK AND SOAK PIT

This is a lump sum item. The Contractor shall be required to complete the work in all respect as per drawings furnished by the Employer. All the clause including earth work

(excavation, backfilling, disposal etc.), masonry work, all types of fillings, all types of pipes including plumbing and vent pipes, all type of fittings etc. shall be deemed to be included in this lump sum rate. However, the concrete (all types) and the reinforcement shall be measured and paid under the relevant clauses mentioned above.

20.16 FIRE WATER TANK

This is a lump sum item. The Contractor shall be required to complete the work in all respect as per drawings furnished by the Employer. All the items including, compaction, brick work, roof truss, purlins, roofing, all types of miscellaneous steel, internal and external plastering, painting etc. shall be deemed to be included in this lump sum cost. However, concrete (all types) and reinforcement shall be measured and paid under the relevant clauses as mentioned above.

20.17 EXTERNAL WATER SUPPLY FROM BORE-WELL TO FIRE WATER TANK, CONTROL ROOM BUILDING AND TRANSIT CAMP:

The external water supply from Bore-well shall be measured in running meters of pipe of various diameters. It shall include all the items such as earth work (excavation, backfilling, disposal etc.), piping, pipe fittings, painting, brickwork, sand filling, concrete, valves, chambers cutting chases in walls, openings in RCC and repairs, etc. required to complete the job.

20.18 EXTERNAL SEWERAGE :

Sewage System of the shall be measured diameter wise in running meters. It shall include all the items such as earth work (excavation, backfilling, disposal etc.), piping, pipe fittings, manholes, gully trap, gully chamber, encasing in concrete and repairs etc required to complete the job. Any modification in the existing sewage system, if required, shall be done by the Contractor without any financial implication to Employer.

20.19 CABLE TRENCHES:

Various items like earth work (excavation, backfilling, disposal etc.), concrete (all type), reinforcement steel and miscellaneous steel required for construction of cable trenches shall be measured and paid under respective clauses mentioned above.

20.20 DRAINS:

The item Concrete (all type) & Reinforcement for drains shall be measured under relevant clauses as mentioned above. All other items required for completion of drains

shall be deemed to be included in the rate of items quoted for the drain. The quantity for each type of drain section shall be measured in meters along the centre line of drain.

20.21 SOIL TREATMENT :

CNS or sand filling or boulder packing with interstices filled with sand under or sides of the foundations, roads, cable trenches, drains etc shall be measured in cubic meters.

20.22 PILE FOUNDATION:

20.22.1 For payment purpose pile of different diameter shall be measured separately in length (running meter) from bottom of pile cap to the lowest point of pile. The rate shall include boring, providing and installation including temporary casing as applicable etc. complete in all respect except for concrete and reinforcement steel which will be paid separately under relevant items of BPS. Initial and routine test for vertical load and lateral load shall be payable under respective items of BPS.

20.22.2 In case pile foundation is not envisaged originally in the LOA then concrete and reinforcement steel shall be measured and paid as per items mentioned under relevant clauses as mentioned above. Boring installation including temporary casing, bentonite treatment, initial and routine tests etc of pile will be paid as an extra item. In case extra quantity of cement is required to meet the provisions of IS: 2911, it will be paid as an extra item.

20.23 CONTRACTOR DESIGNED FOUNDATIONS: Contractor designed foundations shall be measured {quantity of earth work (excavation, backfilling, disposal etc.), PCC, RCC, reinforcement} and paid as per relevant clauses as mentioned above, unless otherwise specified.

20.24 Billing break up of Lump sum items for payment purpose shall be decided at site by Engineer in charge for the work.

20.25 Civil works for Pipe supports and deluge valve housing for firefighting shall be deemed to be included in the items for firefighting and shall not be paid under civil works.

20.26 BOUNDARY WALL:

The measurements of boundary wall shall be in running meter of finished work. The rate shall be inclusive of earth work (excavation, backfilling, disposal etc.), concrete (all type), Reinforcement, MS steel, brick masonry, plastering barbed wire/ concertina coil, painting etc. complete required for completion of boundary wall. Nothing extra shall be payable on this account.

20.27 SITE LEVELLING:

20.27.1 EARTH WORK IN EXCAVATION AND FILLING

The quantity of excavation in all types of soil and soft/disintegrated rock shall be worked out by using initial and final levels. No void deduction shall be made to calculate net quantity of earth work. Only Excavation/cutting will be measured for payment purpose. The unit of measurement shall be in cubic metre.

In case hard rock is encountered during excavation, the level of rock surface before start and completion of rock excavation shall be recorded for calculating the quantity of excavation of hard rock. The volume of hard rock shall be computed on the basis of stacks of excavated rubble after making 50 % deduction for voids. The item of excavation in hard rock shall be payable separately.

The quantity of earth work in excavation in all kinds of soil & soft/disintegrated rock shall be arrived by reducing quantity of hard rock from the gross excavated quantity.

The unit rate shall include all lifts and all leads within levelling boundary. It also includes disposal of surplus earth and stacking of unusable material up the lead of2000 meters beyond the levelling boundary. Rate of item shall include all operations specified in the respective clause of technical specification.

20.27.2 EARTH WORKS IN EXCAVATION IN ALL TYPES OF SOILS AND SOFT /DISINTEGRATED ROCKS, HARD ROCKS AND DISPOSAL.

Quantity of excavation in all type of soils and soft/disintegrated rocks shall be worked out based on initial level before start of excavation and final levels after excavation. No void deduction shall be made to calculate net quantity of earth work in excavation. The excavated soil and soft/disintegrated rock shall be used for filling in lower areas of the substation. The unit rate shall include disposal of excavated material for leads up to 1000 meters beyond the levelling boundary.

For hard rock excavation, the volume of hard rock shall be computed on the basis of stacks of excavated rubble after making 50% deduction for voids. The unit of measurement shall be in cubic meter. The unit rate shall include stacking, disposal of excavated material for leads up to 2000 meters beyond the levelling boundary.

Where soil, soft/disintegrated rock and hard rock are mixed, the quantity of earth work in excavation in all kinds of soil & soft/disintegrated rock shall be arrived by reducing quantity of hard rock from the gross excavated quantity. Rate of item shall include all operations specified in the respective clause of technical specification.

20.27.3 FILLING USING EARTH BORROWED FROM OUTSIDE THE SUBSTATION LAND

For borrowed earth, the measurement shall be based on levels of area under filling only. The quantity of earth shall be worked out based on initial and final levels of levelling area. No void deduction shall be made to calculate net quantity of earth work. The unit of measurement shall be in cubic meter. The rate shall include arrangement of borrow area, payment of royalty, transportation, laying compaction, all leads and lifts etc. Rate of item shall include all operations specified in the respective clause of technical specification.

Annexure-1

INTEGRITY PACT

Between

Bharat Heavy Electricals Ltd. (BHEL), a company registered under the Companies Act 1956 and having its registered office at "BHEL House", Siri Fort, New Delhi - 110049 (India) hereinafter referred to as "The Principal", which expression unless repugnant to the context or meaning hereof shall include its successors or assigns of the ONE PART

and

_____, (description of the party along with address), hereinafter referred to as "The Bidder/ Contractor" which expression unless repugnant to the context or meaning hereof shall include its successors or assigns of the OTHER PART

Preamble

The Principal intends to award, under laid-down organizational procedures, contract/s for _____

_____
_____ (hereinafter referred to as "Contract"). The Principal values full compliance with all relevant laws of the land, rules and regulations, and the principles of economic use of resources, and of fairness and transparency in its relations with its Bidder(s)/ Contractor(s).

In order to achieve these goals, the Principal will appoint panel of Independent External Monitor(s) (IEMs), who will monitor the tender process and the execution of the contract for compliance with the principles mentioned above.

Section 1- Commitments of the Principal

1.1 The Principal commits itself to take all measures necessary to prevent corruption and to observe the following principles: -

1.1.1 No employee of the Principal, personally or through family members, will in connection with the tender for, or the execution of a contract, demand, take a promise for or accept, for self or third person, any material or immaterial benefit which the person is not legally entitled to.

1.1.2 The Principal will, during the tender process treat all Bidder(s) with equity and reason. The Principal will in particular, before and during the tender process, provide to all Bidder(s) the same information and will not provide to any Bidder(s) confidential/ additional information through which the Bidder(s) could obtain an advantage in relation to the tender process or the contract execution.

1.1.3 The Principal will exclude from the process all known prejudiced persons.

1.2 If the Principal obtains information on the conduct of any of its employees which is a penal offence under the Indian Penal Code 1860 and Prevention of Corruption Act 1988 or any other statutory penal enactment, or if there be a substantive suspicion in this regard, the Principal will inform its Vigilance Office and in addition can initiate disciplinary actions.

Section 2 - Commitments of the Bidder(s)/ Contractor(s)

2.1 The Bidder(s)/ Contractor(s) commit himself to take all measures necessary to prevent corruption. The Bidder(s)/ Contractor(s) commits himself to observe the following principles during participation in the tender process and during the contract execution.

2.1.1 The Bidder(s)/ Contractor(s) will not, directly or through any other person or firm, offer, promise or give to the Principal or to any of the Principal's employees involved in the tender process or the execution of the contract or to any third person any material, immaterial or any other benefit which he/ she is not legally entitled to, in order to obtain in exchange any advantage of any kind whatsoever during the tender process or during the execution of the contract.

2.1.2 The Bidder(s)/ Contractor(s) will not enter with other Bidder(s) into any illegal or undisclosed agreement or understanding, whether formal or informal. This applies in particular to prices, specifications, certifications, subsidiary contracts, submission or non-submission of bids or any other actions to restrict competitiveness or to introduce cartelization in the bidding process.

2.1.3 The Bidder(s)/ Contractor(s) will not commit any penal offence under the relevant Indian Penal Code (IPC) and Prevention of Corruption Act; further the Bidder(s)/ Contractor(s) will not use improperly, for purposes of competition or personal gain, or pass on to others, any information or document provided by the Principal as part of the business relationship, regarding plans, technical proposals and business details, including information contained or transmitted electronically.

2.1.4 Foreign Bidder(s)/ Contractor(s) shall disclose the name and address of agents and representatives in India and Indian Bidder(s)/ Contractor(s) to disclose their foreign principals or associates. The Bidder(s)/ Contractor(s) will, when presenting his bid, disclose any and all payments he has made, and is committed to or intends to make to agents, brokers or any other intermediaries in connection with the award of the contract.

2.2 The Bidder(s)/ Contractor(s) will not instigate third persons to commit offences outlined above or be an accessory to such offences.

2.3 The Bidder(s)/ Contractor(s) shall not approach the Courts while representing the matters to IEMs and shall await their decision in the matter.

Section 3 - Disqualification from tender process and exclusion from future contracts

If the Bidder(s)/ Contractor(s), before award or during execution has committed a transgression through a violation of Section 2 above, or acts in any other manner such as to put his reliability or credibility in question, the Principal is entitled to disqualify the Bidder(s)/ Contractor(s) from the tender process , terminate the contract, if already awarded, exclude from future business dealings and/ or take action as per the separate "Guidelines on Banning of Business dealings with Suppliers/ Contractors", framed by the Principal.

Section 4 - **Compensation for Damages**

4.1 If the Principal has disqualified the Bidder (s) from the tender process before award / order acceptance according to Section 3, the Principal is entitled to demand and recover the damages equivalent to Earnest Money Deposit/ Bid Security.

4.2 If the Principal is entitled to terminate the Contract according to Section 3, or terminates the Contract in application of Section 3 above , the Bidder(s)/ Cotractor (s) transgression through a violation of Section 2 above shall be construed breach of contract and the Principal shall be-entitled to demand and recover from the Contractor an amount equal to 5% of the contract value or the amount equivalent to Security Deposit/ Performance Bank Guarantee , whichever is higher, as damages, in addition to and without prejudice to its right to demand and recover compensation for any other loss or damages specified elsewhere in the contract.

Section 5 - Previous Transgression

5.1 The Bidder declares that no previous transgressions occurred in the last 3 (three) years with any other company in any country conforming to the anti-corruption approach or with any other Public Sector Enterprise in India that could justify his exclusion from the tender process.

5.2 If the Bidder makes incorrect statement on this subject, he can be disqualified from the tender process or the contract, if already awarded, can be terminated for such reason or action can be taken as per the separate "Guidelines on Banning of Business dealings with Suppliers/ Contractors", framed by the Principal.

Section 6 - Equal treatment of all Bidder (s)/ Contractor (s) / Sub-contractor (s)

6.1 The Principal will enter into Integrity Pacts with identical conditions as this Integrity Pact with all Bidders and Contractors.

6.2 In case of Sub-contracting, the Principal Contractor shall take the responsibility of the adoption of Integrity Pact by the Sub-contractor(s) and ensure that all Sub-contractors also sign the Integrity Pact.

6.3 The Principal will disqualify from the tender process all Bidders who do not sign this Integrity Pact or violate its provisions.

Section 7 - Criminal Charges against violating Bidders/ Contractors /Subcontractors

If the Principal obtains knowledge of conduct of a Bidder, Contractor or Subcontractor, or of an employee or a representative or an associate of a Bidder, Contractor or Subcontractor which constitutes corruption, or if the Principal has substantive suspicion in this regard, the Principal will inform the Vigilance Office.

Section 8 -Independent External Monitor(s)

8.1 The Principal appoints competent and credible panel of Independent External Monitor (s) (IEMs) for this Integrity Pact. The task of the IEMs is to review independently and objectively, whether and to what extent the parties comply with the obligations under this Integrity Pact.

8.2 The IEMs are not subject to instructions by the representatives of the parties and performs his functions neutrally and independently. He reports to the CMD, BHEL.

8.3 The IEMs shall be provided access to all documents/ records pertaining to the Contract, for which a complaint or issue is raised before them as and when warranted. However, the documents/records/information having National Security implications and those documents which have been classified as Secret/Top Secret are not to be disclosed.

8.4 The Principal will provide to the IEMs sufficient information about all meetings among the parties related to the Contract provided such meetings could have an impact on the contractual relations between the Principal and the Contractor. The parties offer to the IEMs the option to participate in such meetings.

8.5 The advisory role of IEMs is envisaged as that of a friend, philosopher and guide. The advice of IEMs would not be legally binding and it is restricted to resolving issues raised by a Bidder regarding any aspect of the tender which allegedly restricts competition or bias towards some Bidders. At the same time, it must be understood that IEMs are not consultants to the Management. Their role is independent in nature and the advice once tendered would not be subject to review at the request of the organization.

8.6 For ensuring the desired transparency and objectivity in dealing with the complaints arising out of any tendering process or during execution of Contract, the matter should be examined by the full panel of IEMs jointly, who would look into the records, conduct an investigation, and submit their joint recommendations to the Management.

8.7 The IEMs would examine all complaints received by them and give their recommendations/ views to the CMD, BHEL at the earliest. They may also send their report directly to the CVO, in case of suspicion of serious irregularities requiring legal/ administrative action. Only in case of very serious issue having a specific, verifiable Vigilance angle, the matter should be reported directly to the Commission. IEMs will tender their advice on the complaints within 30 days.

8.8 The CMD, BHEL shall decide the compensation to be paid to the IEMs and its terms and conditions.

8.9 IEMs should examine the process integrity, they are not expected to concern themselves with fixing of responsibility of officers. Complaints alleging mala fide on the part of any officer of the Prinicpal should be looked into by the CVO of the Principal.

8.10 If the IEMs have reported to the CMD, BHEL, a substantiated suspicion of an offence under relevant Indian Penal Code / Prevention of Corruption Act, and the CMD, BHEL has not, within reasonable time, taken visible action to proceed against such offence or reported it to the Vigilance Office, the IEMs may also transmit this information directly to the Central Vigilance Commissioner, Government of India.

8.11 After award of work, the IEMs shall look into any issue relating to execution of Contract, if specifically raised before them. As an illustrative example, if a Contractor who has been awarded the Contract, during the execution of Contract, raises issue of delayed payment etc. before the IEMs, the same shall be examined by the panel of IEMs. Issues like warranty/ guarantee etc. shall be outside the purview of IEMs.

8.12 However, the IEMs may suggest systemic improvements to the management of the Principal, if considered necessary, to bring about transparency, equity and fairness in the system of procurement.

8.13 The word `Monitor' would include both singular and plural.

Section 9 - Pact Duration

9.1 This Integrity Pact shall be operative from the date this Integrity Pact is signed by both the parties till the final completion of contract for successful Bidder, and for all other Bidders 6 months after the Contract has been awarded. Any violation of the same would entail disqualification of the bidders and exclusion from future business dealings.

9.2 If any claim is made/ lodged during currency of this Integrity Pact, the same shall be binding and continue to be valid despite the lapse of this Pact as specified above, unless it is discharged/ determined by the CMD, BHEL.

Section 10 - Other Provisions

10.1 This Integrity Pact is subject to Indian Laws and exclusive jurisdiction shall be of the competent Courts as indicated in the Tender or Contract, as the case may be.

10.2 Changes and supplements as well as termination notices need to be made in writing.

10.3 If the Bidder(s)/ Contractor(s) is a partnership or a consortium or a joint venture, this Integrity Pact shall be signed by all partners of the partnership or joint venture or all consortium members.

10.4 Should one or several provisions of this Integrity Pact turn out to be invalid, the remainder of this Integrity Pact remains valid. In this case, the parties will strive to come to an agreement to their original intentions.

10.5 Only those bidders / contractors who have entered into this Integrity Pact with the Principal would be competent to participate in the bidding. In other words, entering into this Integrity Pact would be a preliminary qualification.

10.6 In the event of any dispute between the Principal and Bidder(s)/ Contractor(s) relating to the Contract, in case, both the parties are agreeable, they may try to settle dispute through Mediation before the panel of IEMs in a time bound manner. In case, the dispute remains unresolved even after mediation by the panel of IEMs, either party may take further action as the terms & conditions of the Contract. The fees/expenses on dispute resolution through mediation shall be shared by both the parties. Further, the mediation proceedings shall be confidential in nature and the parties shall keep confidential all matters relating to the mediation proceedings including any settlement agreement arrived at between the parties as outcome of mediation. Any views expressed, suggestions, admissions or proposals etc. made by either party in the course of mediation shall not be relied upon or introduced as evidence in any further arbitral or judicial proceedings, whether or not such proceedings relate to the dispute that is the subject of mediation proceedings. Neither of the parties shall present IEMs as witness in any Alternative Dispute Resolution or judicial proceedings in respect of the dispute that was subject of mediation.

---	---
For & On behalf of the Principal (Office Seal)	For & On behalf of the Bidder/ Contractor (Office Seal)
Place _____ Date _____	
Witness:_____ (Name & Address) _____ _____	Witness:_____ (Name & Address) _____ _____

FORMAT OF NO DEVIATION CERTIFICATE

(To be submitted in the bidder's letter head)

Ref. no…… **Date…….**

To,
BHARAT HEAVY ELECTRICALS LIMITED,
TRANSMISSION BUSINESS GROUP,
10TH FLOOR, JOY TOWER, PLOT NO. *C-20,* 1/1A,
C BLOCK, PHASE 2, INDUSTRIAL AREA,
SECTOR-62, NOIDA – 201301 (U.P.)

SUB.: TENDER FOR "EXECUTION & HANDING OVER OF CIVIL WORKS OF SITE LEVELING WORK & CONSTRUCTION OF TOWER & EQUIPMENT'S FOUNDATIONS, CABLE TRENCHE, ROAD, DRAIN, FENCING, FIRE FIGHTING, PUMP HOUSE & WATER TANK AT 400kV YARD of 400/220kV SUB-STATION NEEMUCH (NEW) AT NEEMUCH IN MADHYA PRADESH".

Tender No.: - TBSM/NEEMUCH/CIVIL/PKG-I/TENDER/22-23 **DATE: 27.10.2022**

Dear Sir,

With reference to above, this is to confirm that as per tender conditions, we have visited subject site before submission of our offer and noted the job content & site conditions etc.

We also confirm that we have not changed / modified the tender documents as appeared in the website and in case of observance at any stage, it shall be treated as null and void. We hereby confirm that we have not taken any deviation from tender clauses together with other references as enumerated in the above referred NIT and we hereby convey our unqualified acceptance to all terms and conditions as stipulated in the tender and NIT. In the event of observance of any deviation in any part of our offer at a later date whether implicit or explicit, the deviations shall stand null & void.

We confirm to have submitted offer strictly in accordance with tender instructions.

Thanking you,

Yours faithfully,

(Signature, date & seal of authorized representative of the bidder)

DECLARATION FOR RELATION IN BHEL

(To be typed and submitted in the Letter Head of the Company/Firm of Bidder failing which the offer of Bidder is liable to be summarily rejected)

REF:…… **Date……...**

To,

BHARAT HEAVY ELECTRICALS LIMITED,
TRANSMISSION BUSINESS GROUP,
10TH FLOOR, JOY TOWER, PLOT NO. *C-20,* 1/1A,
C BLOCK, PHASE 2, INDUSTRIAL AREA,
SECTOR-62, NOIDA – 201301 (U.P.)

Dear Sir,

Sub : Declaration for relation in BHEL

Ref : 1) NIT/Tender Specification No..... ,

I/We hereby submit the following information pertaining to relation/relatives of Proprieter/Partner(s)/Director(s) employed in BHEL

Tick(√) any one as applicable:

1. The Proprieter, Partner(s), Director(s) of our Company/Firm DO NOT have any relation or relatives employed in BHEL

OR

2. The Proprieter, Partner(s), or Director(s) of our Company / Firm HAVE relation / relatives employed in BHEL and their particulars are as below:
(i)

(ii)

Signature of the Authorised Signatory

Note:

1. Attach separate sheet, if necessary.
2. If BHEL Management comes to know at a later date that the information furnished by the Bidder is false, BHEL reserves the right to take suitable against the Bidder / Contractor.

FORMATS FOR EPAYMENTS

To,

SR.DGM (Finance)
Transmission Business Group
BHEL, TBG Finance, 10th Floor,
Joy Tower, Plot no. *C-20,* 1/1a,
C block, phase 2, Industrial Area,
Sector-62, noida – 201301 (u.p.)

Subject: E-Payments vide RTGS/NEFT

I/We request and authorise you to effect Epayment vide any of the above two modes to my/our bank account as per the details given below:

Vendor Name :

Title/Name of Account in the bank :

Account Type(Saving /current) :

Bank Account Number | | | | | | | | | | | | | | | | |

Name & address of Bank

Bank /Branch contact person's name :

Bank /Branch Tele Numbers with STD code :

Bank Branch MICR code | | | | | | | | |

(please enclose a copy of a cheque. This cheque should not be a payable at par cheque)

Bank Branch RTGS IFSC code | | | | | | | | | | |

Bank Branch NEFT IFSC code | | | | | | | | | | |

(you can obtain this from branch where you have your account)

Your Email address : **(not more than 20 character)**

Name of the Authorised Signatory : (Please mention here name of person from your organization signing this letter.)

Contact Person's name : (please mention here the name of a person in your company/organization)

I/We confirm that information provided above is correct & any consequences due to any mistake in above will be borne by us.

Thanking you

For
(Autorised Signatory)

We confirm that we are enabled for receiving RTGS/NEFT credits and we further confirm that the account number of (Please mention here name of the account holder), the signature of the authorised signatory and the MICR and IFSC Codes of our branch mentioned above are correct.

Bank's Verification
(Manager's/Officers signature under
bank Stamp)

Note:- Please attach cancelled original Cheque leaf.