FIRST ANGLE PROJECTION

(ALL DIMENSIONS ARE IN mm)

DRG. NO. 2 180 421 6076

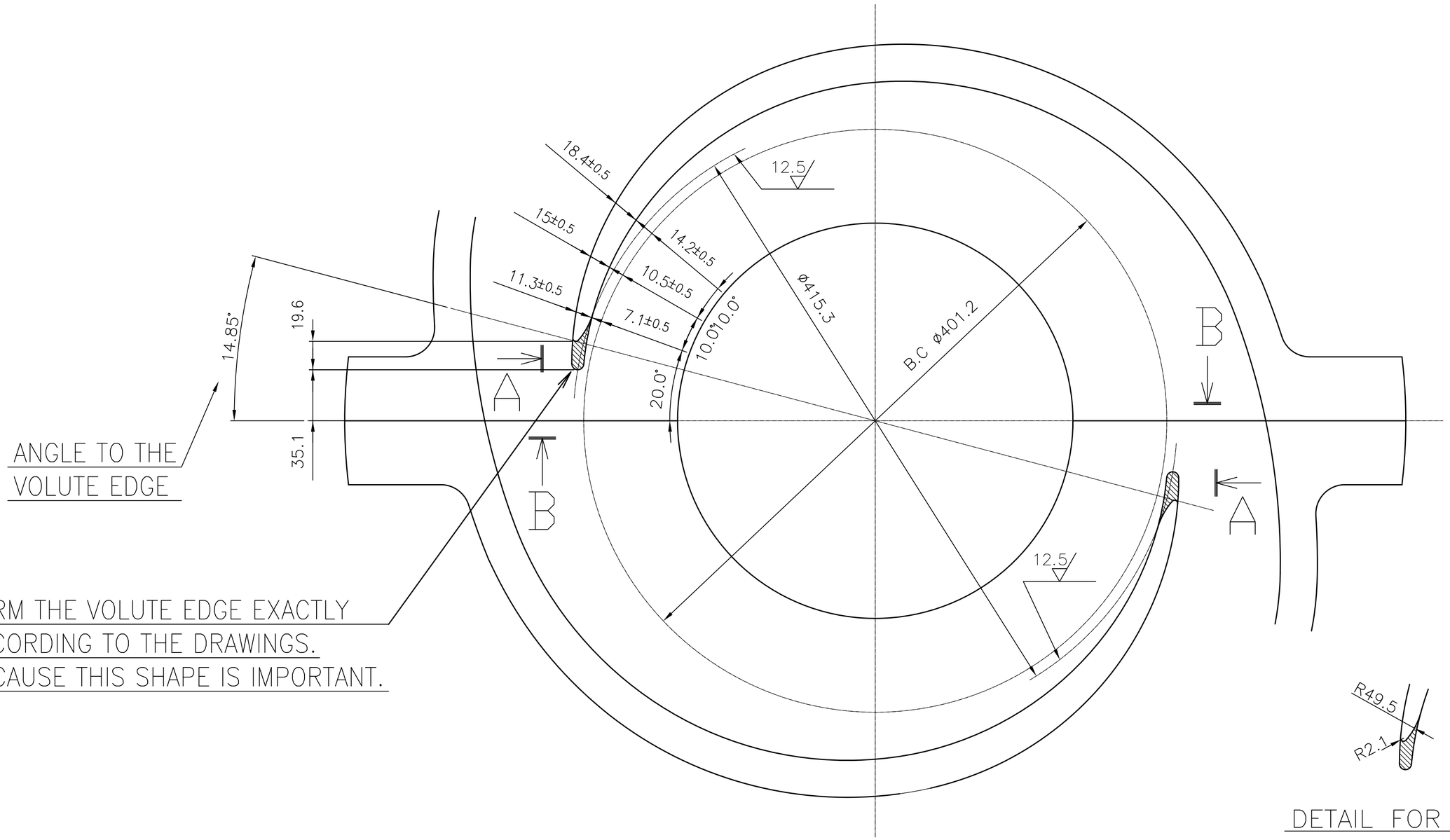

2ND. AND AFTER STAGE

DETAIL FOR EDGE
2ND AND AFTER STG.

SR NO	DESCRIPTION	DRAWING NO.	VAR. NO.	RAW MATERIAL SIZE OR CASTING DRG.NO. OR FORGING DRG.NO.	MATERIAL CODE / MATERIAL SPECN.	NET WT.	GROSS WT. / QUANTITY

THE FOLLOWING CONDITIONS APPLY EXCEPT OTHERWISE STATED...

1. REF.TO HY0230261 FOR UNSPECIFIED TOLERANCES.
2. CHAMFER M/CD SHARP EDGES 1.2 TO 1.0 AT 45°.
3. INTERNAL M/CD CORNER RADII 1 TO 0.7.
4. THE SURFACE ROUGHNESS WHEREVER NOT SHOWN SHALL BE TAKEN FROM THE SURFACE ROUGHNESS SHOWN OUT SIDE BACK SLASHES ONCH AT THE TOP MOST RIGHT CORNER OF THE DRG.

TYPE OF PRODUCT OR NAME OF CUSTOMER/PROJECT: MDG406

भारत हेवी इलेक्ट्रिकल्स लिमिटेड हैदराबाद
BHARAT HEAVY ELECTRICALS LTD. HYDERABAD

	NAME	SIGN.	DATE
DRN.	AS KALYAN		05.06.20
CHD.	AS KALYAN		05.06.20
APPD.	MS RAM		05.06.20

NO.OF VAR. -NA-

DEPT. PUMPS | CODE 410 | SCALE NA | WEIGHT (KG) -NA-

REF. TO ASSY DRG. -NA- | FIRM NO. -NA- | NO.OF FIRMS -NA-

TITLE: INNER CASING
ADDL MACHINING FOR VOLUTE EDGE

DRAWING NO. 2 180 42 1 5076 | REV. 00

SHEET NO. 01 | NO OF SHEETS 01

RESTRICTED USE

BHEL-HYD SAP INFORMATION CENTRE

REV.	DATE	ALTERED / CHECKED	APPD.	ZONE

THE INFORMATION ON THIS DOCUMENT IS THE PROPERTY OF BHARAT HEAVY ELECTRICALS LIMITED. IT MUST NOT BE USED DIRECTLY OR INDIRECTLY IN ANY WAY DETRIMENTAL TO THE INTEREST OF THE COMPANY

DRAWING NO. (SIGN. AND DATE) | REV. NO. P1-09989-00 | COMPUTER FILE NAME P2218042150 76-00

Jun Sat 6 13:39 2020

This Drawing is printed from Engineering Digital Archive System (EDAS).
Therefore signatures are not essentially required.