FIRST ANGLE PROJECTION

(ALL DIMENSIONS ARE IN mm)

DRG. NO. 0 180 42 1 4687

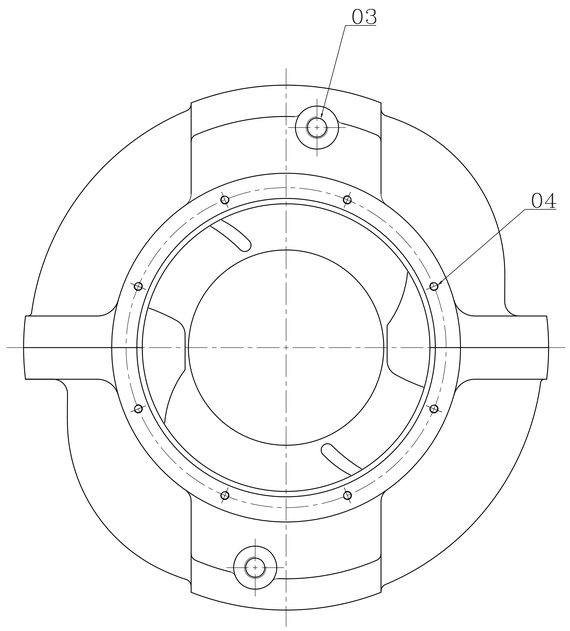

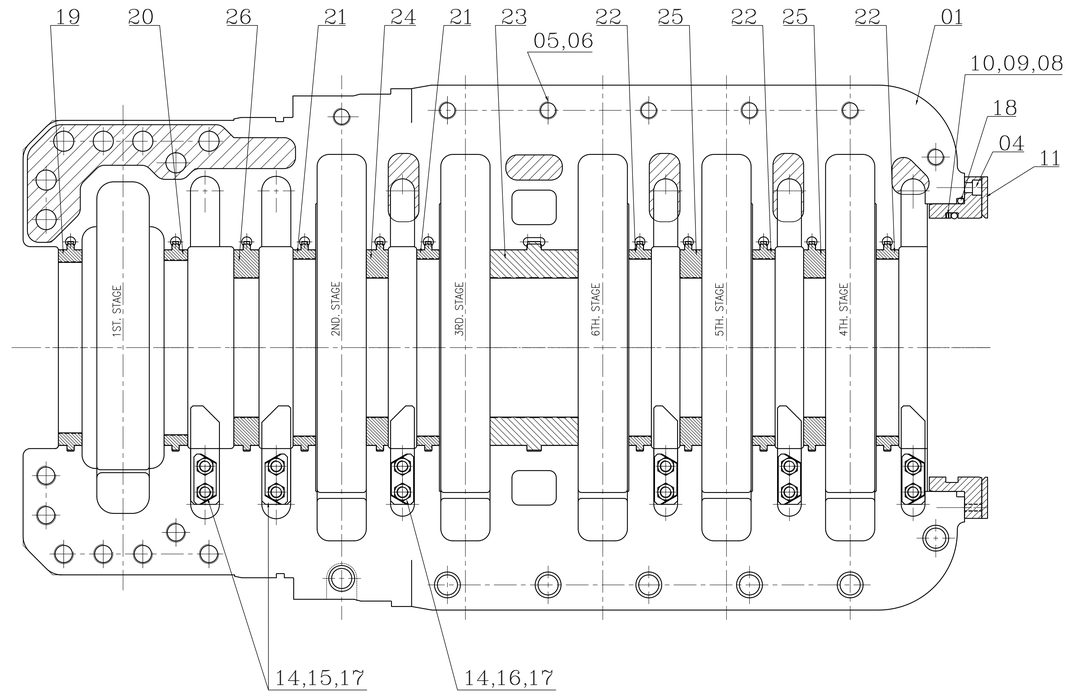

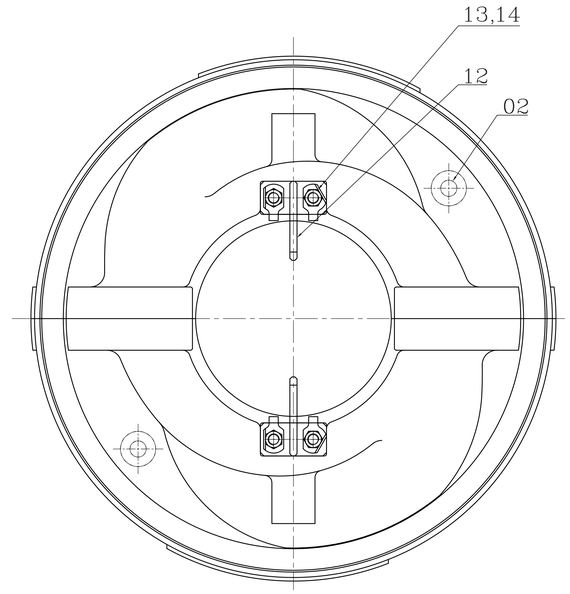

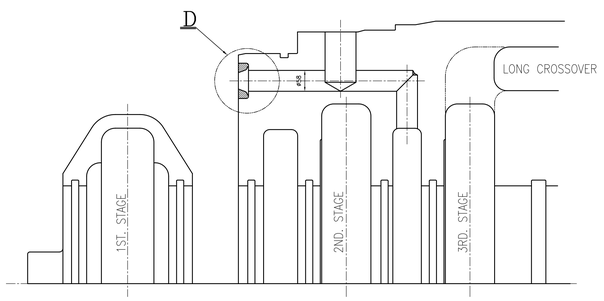

VAR-00, 2ND STAGE TAP

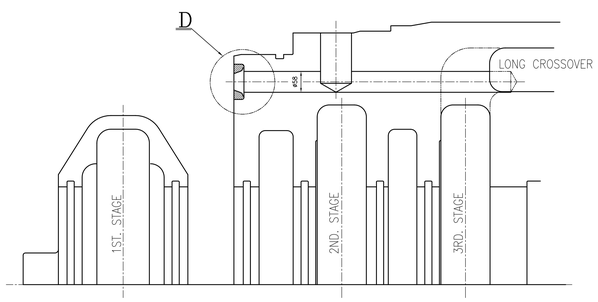

VAR-01, 3RD STAGE TAP

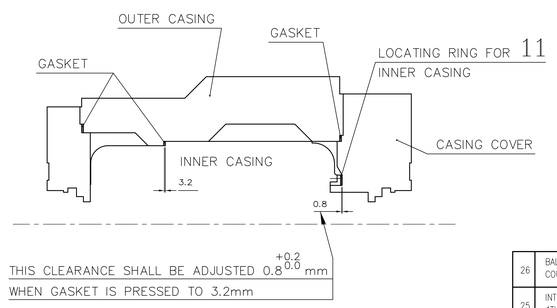

DETAIL FOR ASSEMBLY

THE DESIGNED THICKNESS IS 7.2mm.
(INCL.THE EFFECT OF THERMAL EXPANSION 0.8)
MACHINE THIS (*) SIDE TO ADJUST THE
THICKNESS DURING ASSEMBLY WORK

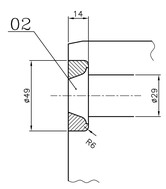

DETAIL-D

VARIANT TABLE :

VAR.NO.	DESCRIPTION	REMARKS	MATL.NO.
00	INNER CASING ASSY	2nd STAGE TAP	01804214687-00
01	INNER CASING ASSY	3rd STAGE TAP	01804214687-01

ITEM NO	DESCRIPTION	DRAWING NO.	VAR. NO.	RAW MATERIAL SIZE OR CASTING DRG.NO. OR FORGING DRG.NO.	MATERIAL CODE / MATERIAL SPECN.	NET WT. / QUANTITY	GROSS WT.
26	BALANCING BUSHING COUP SIDE (SPLIT)	21804215086-00			FP9750671481	8.3	
					FP50671-48	1	
25	INTER STG BUSHING 4TH,5TH STG (SPLIT)	21804215085-00			FP9750671481	7.2	
					FP50671-48	2	
24	INTER STG BUSHING 2ND STG (SPLIT)	21804215084-00			FP9750671481	7.2	
					FP50671-48	1	
23	INTER STG BUSHING CENTER (SPLIT)	21804215083-00			FP9750671473	28.0	
					FP50671-47	1	
22	CASING RING 4TH,5TH,6TH STG	21804215082-00			FP9750671465	3.0	
					FP50671-46	3	
21	CASING RING 2,3 STG COUP SIDE	21804215081-00			FP9750671465	3.0	
					FP50671-46	2	
20	CASING RING 1ST STG END SIDE	21804215080-00			FP9750671465	3.6	
					FP50671-46	1	
19	CASING RING 1ST STG COUP SIDE	21804215079-00			FP9750671465	4.0	
					FP50671-46	1	
18	O-RING ID399.5x8.4	FP50619-55		P400	FP9850619552	0.05	
					FP50619-55	1	
17	RECTANGULAR WASHER 31x70	FP90139-03			FP9790139039	0.015	
					FP90139-03	12	
16	SPLITTER STD STG	31804215439-00			AA1071839136	0.40	
					AA10739	8	
15	SPLITTER 1ST STG END SIDE & 2ND STG	31804215438-00			AA1071839136	0.50	
					AA10739	4	
14	HEXAGON HEAD BOLT M16x30	FP90045-05			FP9790045050	0.4	
					FP90045-05	28	
13	TONGUED WASHER OD38/ID17	FP90138-02			FP9790138024	0.005	
					FP90138-02	4	
12	SPLITTER ASSY 1ST STG COUP SIDE	31804215437-00			-	0.58	
						2	
11	LOCATING RING FOR INNER CASING	31804215440-00			AA1071838075	0.6	
					AA10738	1	
10	BACK-UP RING ID360/OD375x2.75 BR	FP50619-46		P360 T3 BR	FP9750630467	0.12	
					FP50619-46	1	
09	BACK-UP RING ID360/OD375x2.75	FP50630-35		P360 T3	FP9850630353	0.021	
					FP50630-35	1	
08	O-RING ID359.5x8.4	FP50619-50		P360	FP9850619503	0.05	
					FP50619-50	1	
07	BUSHING FOR INNER CASING	21804215087-00			FP9750629434	22.0	
					FP50629-43	1	
06	SPRING LOCK WASHER M30				AA7164002118	0.046	
					AA7164002	28	
05	HEXAGON SOC. HEAD CAP SCREW M30x70	FP90123-07			FP9790123078	1.24	
					FP90123-07	28	
04	HEXAGON SOC. HEAD CAP SCREW M12x20	FP90123-01			FP9790123019	0.03	
					FP90123-01	8	
03	PIN L=55, FOR INNER CASING	31804215421-01			HY1070270180	0.4	
					HY10770	1	
02	BLIND COVER ø39 (2 & 3 TAP OFF)	31804215422-02			AA1070221201	0.13	
					AA10721	1	
01	INNER CASING M/C UPPER & LOWER HALVES	21804215078	00	21804215078-00 : 2ND STG TAP	FP9219306182	1640	
			01	21804215078-01 : 3RD STG TAP	HY19593	1 SET	

THE FOLLOWING CONDITIONS APPLY EXCEPT OTHERWISE STATED.

1. REF.TO HY0230261 FOR UNS. TOLERANCES.
2. CHAMFER M/CD SHARP EDGE 1.2 TO 1.0 AT 45°.
3. INTERNAL M/CD CORNER RADII 1 TO 0.7.
4. THE SURFACE ROUGHNESS WHEREVER NOT SHOWN SHALL BE TAKEN FROM THE SURFACE ROUGHNESS SHOWN OUT SIDE BACK SLASHES GIVEN AT THE TOP MOST RIGHT CORNER OF THE DRG.

TYPE OF PRODUCT OR NAME OF CUSTOMER/PROJECT: MDG406

भारत हेवी इलेक्ट्रिकल्स लिमिटेड हैदराबाद
BHARAT HEAVY ELECTRICALS LTD. HYDERABAD

	NAME	SIGN.	DATE
DRN.	M.S.RAM		17.08.20
CHD.	M.S.RAM		17.08.20
APPD.	M.S.RAM		17.08.20

NO.OF VAR. NA

DEPT.	PUMPS	SCALE	WEIGHT (KG)	REF. TO ASSY DRG.	ITEM NO.	NO.OF ITEMS
CODE	410	NTS	1720	NA	NA	NA

TITLE: INNER CASING ASSEMBLY

DRAWING NO. 0 180 42 1 4687 REV. 01

SHEET NO. 01 NO OF SHEETS 01

REV.	DATE	ALTERED	CHECKED	APPD.
01	22.04.21	Variant table added.		

ZONE

THE INFORMATION ON THIS DOCUMENT IS THE PROPERTY OF BHARAT HEAVY ELECTRICALS LIMITED. IT MUST NOT BE USED DIRECTLY OR INDIRECTLY IN ANY WAY DETRIMENTAL TO THE INTREST OF THE COMPAY.

COMPUTER FILE NAME : FP01804214687-01

INVENTORY NO | SIGN. AND DATE | REF. DRG. NO.

Apr Tue 27 17:11 2021

This Drawing is printed from Engineering Digital Archive System (EDAS).
Therefore signatures are not essentially required.