FIRST ANGLE PROJECTION

(ALL DIMENSIONS ARE IN mm)

DRG. NO. 0 180 421 4686

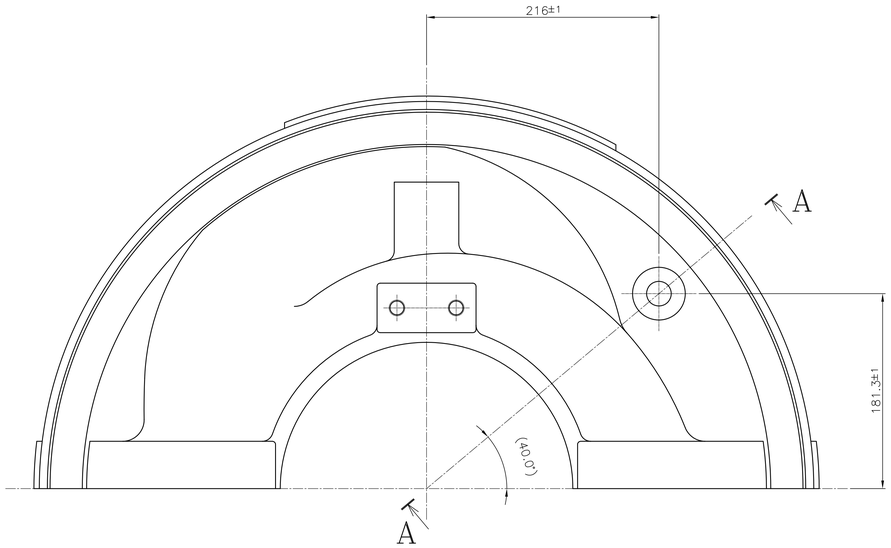

COUP. SIDE DRAWING

VAR-00 & VAR-01

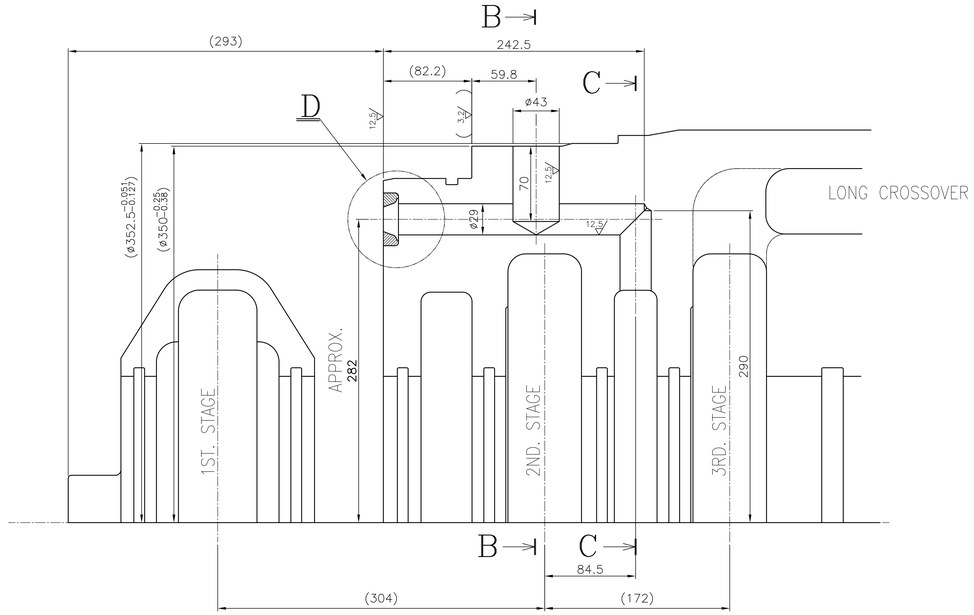

VAR-00, SECTION-AA: 2ND STG. TAP

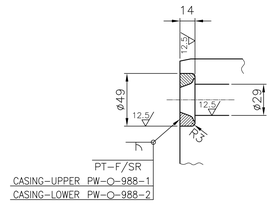

DETAIL-D

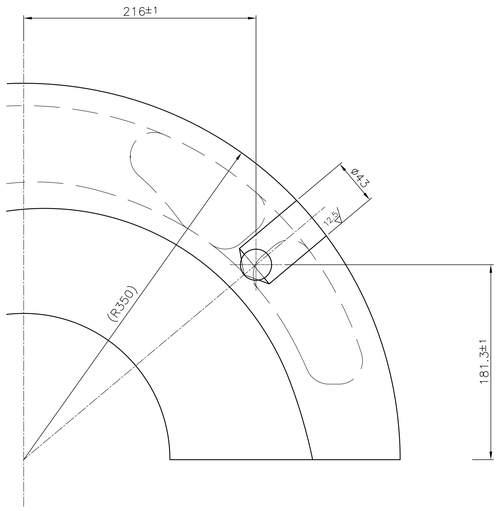

SECTION-BB

VAR-00 & VAR-01

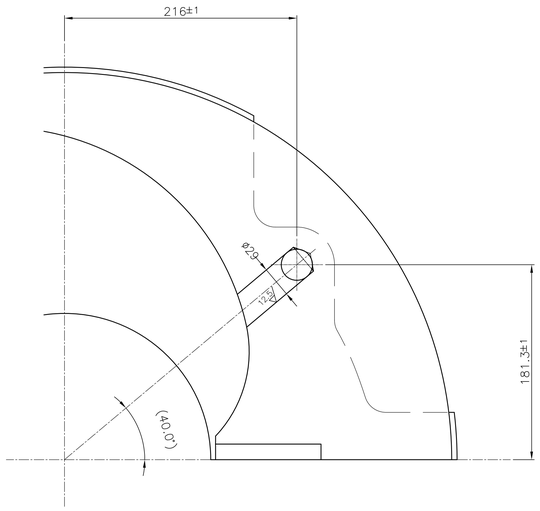

SECTION-CC

VAR-00

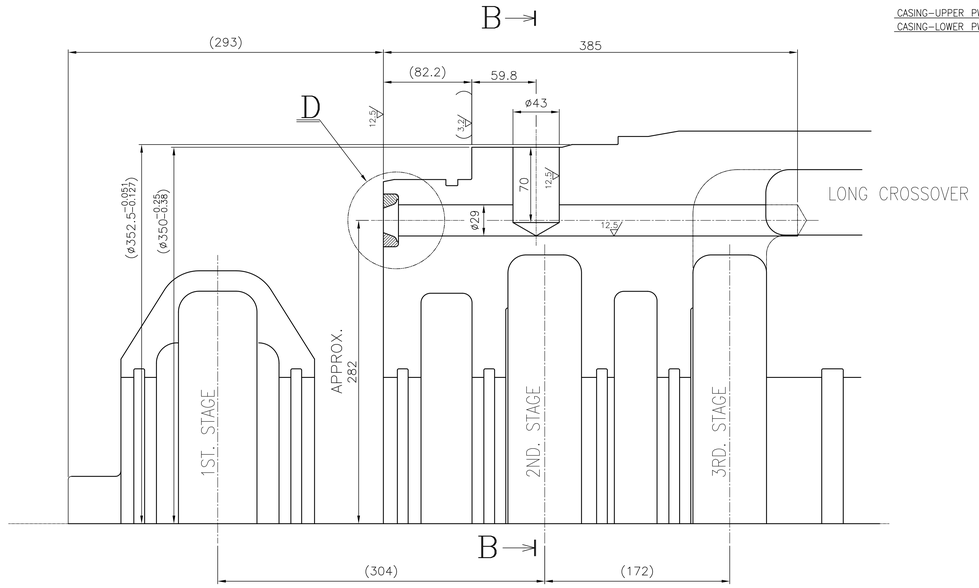

VAR-01, SECTION-AA: 3RD STG. TAP

VARIANT TABLE :

VAR.NO.	DESCRIPTION	REMARKS	MATL.NO.
00	INNER CASING ADDL.M/C	2nd STAGE TAP	01804214686-00
01	INNER CASING ADDL.M/C	3rd STAGE TAP	01804214686-01

ITEM NO	DESCRIPTION	DRAWING NO.	VAR. NO.	RAW MATERIAL SIZE OR CASTING DRG.NO. OR FORGING DRG.NO.	MATERIAL CODE / MATERIAL SPECN.	NET WT.	GROSS WT. / QUANTITY

THE FOLLOWING CONDITIONS APPLY EXCEPT OTHERWISE STATED.

1. REF.TO HY0230261 FOR UNS TOLERANCES.
2. CHAMFER M/CD SHARP EDGE 1.2 TO 1.0 AT 45°.
3. INTERNAL M/CD CORNER RADII 1 TO 0.7.
4. THE SURFACE ROUGHNESS WHEREVER NOT SHOWN SHALL BE TAKEN FROM THE SURFACE ROUGHNESS SHOWN OUT SIDE BACK SLASHES OVEN AT THE TOP MOST RIGHT CORNER OF THE DRG.

TYPE OF PRODUCT OR NAME OF CUSTOMER/PROJECT: MDG406

भारत हेवी इलेक्ट्रिकल्स लिमिटेड हैदराबाद
BHARAT HEAVY ELECTRICALS LTD. HYDERABAD

	NAME	SIGN.	DATE	NO.OF VAR.
DRN.	AS KALYAN		05.06.20	
CHD.	M.S.RAM		05.06.20	-NA-
APPD.	M.S.RAM		05.06.20	

DEPT.	PUMPS	SCALE	WEIGHT (KG)	REF. TO ASSY DRG.	ITEM NO.	NO.OF ITEMS
CODE	410	NTS	-NA-	-NA-	-NA-	-NA-

TITLE: INNER CASING ADDL MACHINING DRAWING

DRAWING NO. 0 180 42 1 4686 REV. 01

SHEET NO. 01 NO OF SHEETS 01

REV.	DATE	ALTERED / CHECKED	APPD.
01	27.04.21	ALTERED mersm; CHECKED mersm	APPD. mersm
		Variant table added.	

THE INFORMATION ON THIS DOCUMENT IS THE PROPERTY OF BHARAT HEAVY ELECTRICALS LIMITED. IT MUST NOT BE USED DIRECTLY OR INDIRECTLY IN ANY WAY DETRIMENTAL TO THE INTREST OF THE COMPANY

INVENTORY NO | SIGN. AND DATE | REF. DRG. NO. PT-O988-R0 | COMPUTER FILE NAME F0018004214686-01

Apr Tue 27 17:08 2021

This Drawing is printed from Engineering Digital Archive System (EDAS). Therefore signatures are not essentially required.