FIRST ANGLE PROJECTION

(ALL DIMENSIONS ARE IN mm)

DRG. NO. 0 180 421 4681

IMPELLER ROTATION

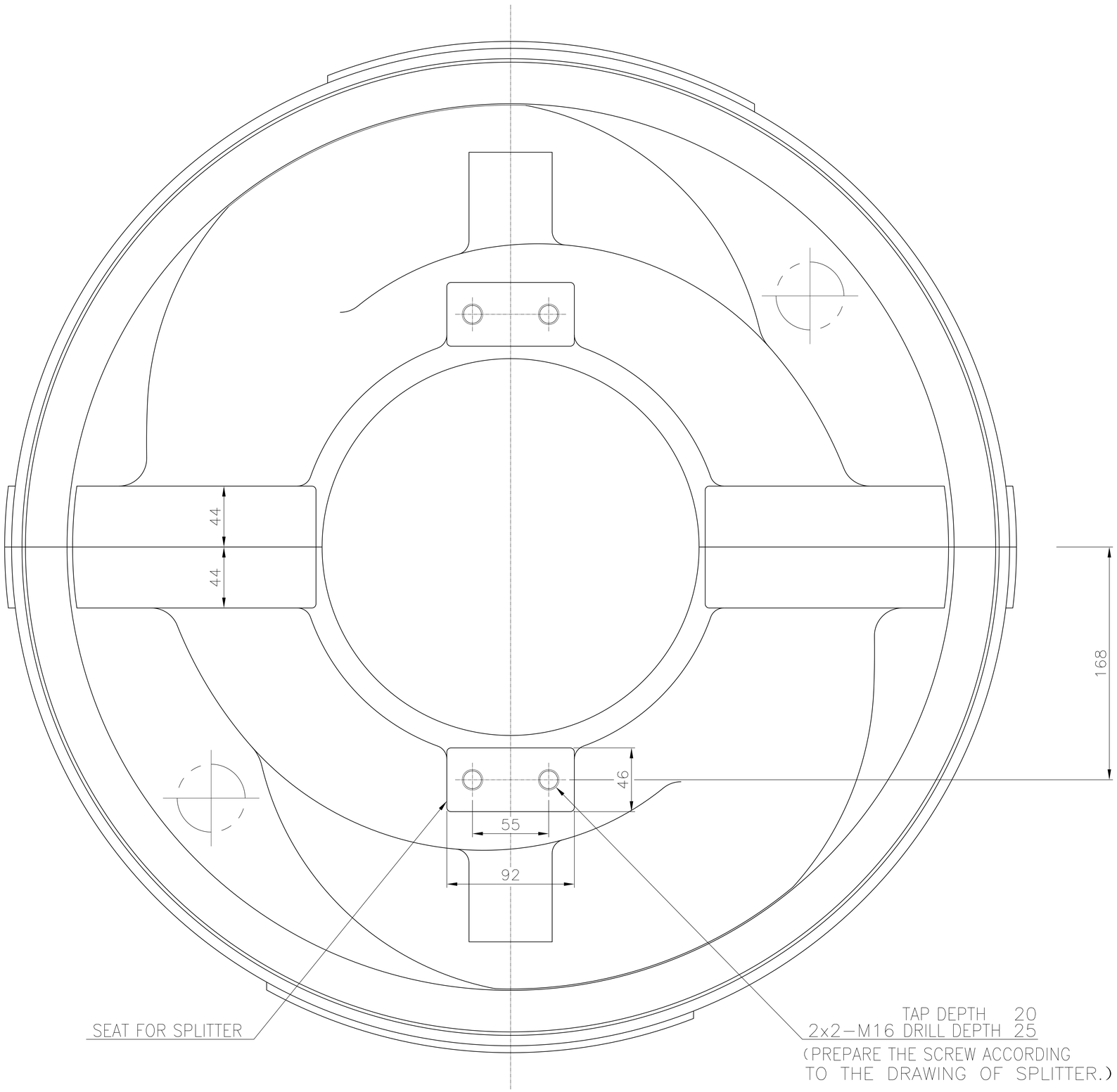

ITEM NO	DESCRIPTION	DRAWING NO.	VAR. NO.	RAW MATERIAL SIZE OR CASTING DRG.NO. OR FORGING DRG.NO.	MATERIAL CODE	NET WT.	GROSS WT.
					MATERIAL SPECN.	QUANTITY	

THE FOLLOWING CONDITIONS APPLY EXCEPT OTHERWISE STATED.

1. REF.TO HY02230261 FOR UNS TOLERANCES.
2. CHAMFER M/CD SHARP EDGE 1.2 TO 1.0 AT 45°.
3. INTERNAL M/CD CORNER RADII 1 TO 0.7.
4. THE SURFACE ROUGHNESS WHEREVER NOT SHOWN SHALL BE TAKEN FROM THE SURFACE ROUGHNESS SHOWN OUT SIDE BACK SLASHES GIVEN AT THE TOP MOST RIGHT CORNER OF THE DRG.

TYPE OF PRODUCT OR NAME OF CUSTOMER/PROJECT: MDG406

भारत हेवी इलेक्ट्रिकल्स लिमिटेड
हैदराबाद
BHARAT HEAVY ELECTRICALS LTD.
HYDERABAD

	NAME	SIGN.	DATE
DRN.	AS KALYAN		05.06.20
CHD.	AS KALYAN		05.06.20
APPD.	MS RAM		05.06.20

SUBMITTED

DEPT. PUMPS		SCALE	WEIGHT (KG)	REF. TO ASSY DRG.	ITEM NO.	NO.OF ITEMS
CODE 410		NTS	-NA-	-NA-	-NA-	-NA-

TITLE: INNER CASING COUPLING SIDE

DRAWING NO. 0 180 42 1 4681 — REV. 00

SHEET NO. 01 — NO OF SHEETS 01

REV.	DATE	ALTERED	CHECKED	APPD.	ZONE

THE INFORMATION ON THIS DOCUMENT IS THE PROPERTY OF BHARAT HEAVY ELECTRICALS LIMITED.
IT MUST NOT BE USED DIRECTLY OR INDIRECTLY IN ANY WAY DETRIMENTAL TO THE INTREST OF THE COMPANY

INVENTORY NO | SIGN. AND DATE | REF. DRG. NO. | COMPUTER FILE NAME

Jun Sat 6 13:37 2020

This Drawing is printed from Engineering Digital Archive System (EDAS).
Therefore signatures are not essentially required.