FIRST ANGLE PROJECTION

(ALL DIMENSIONS ARE IN mm)

DRG. NO. 0 180 421 4679

IMPELLER ROTATION

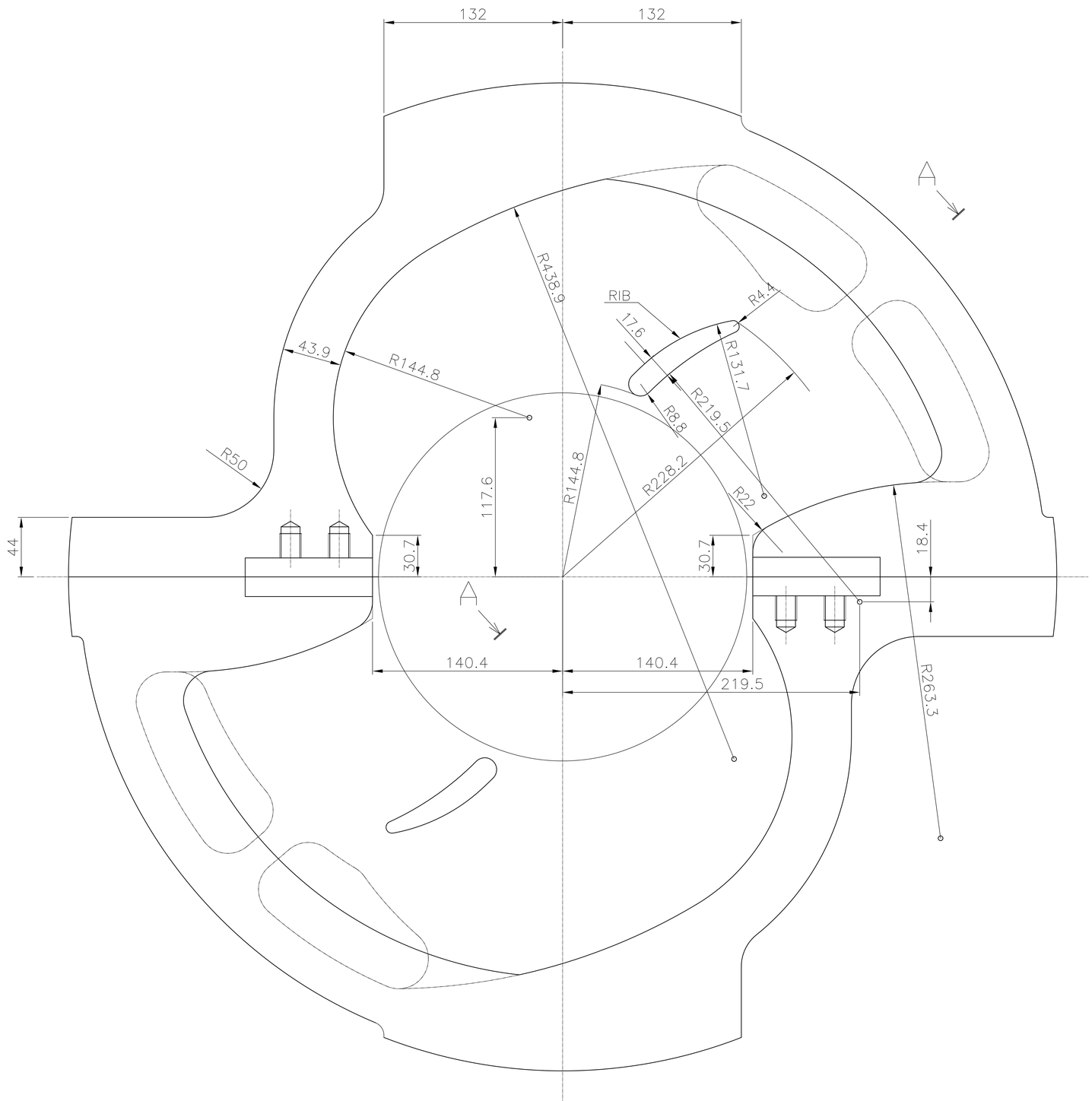

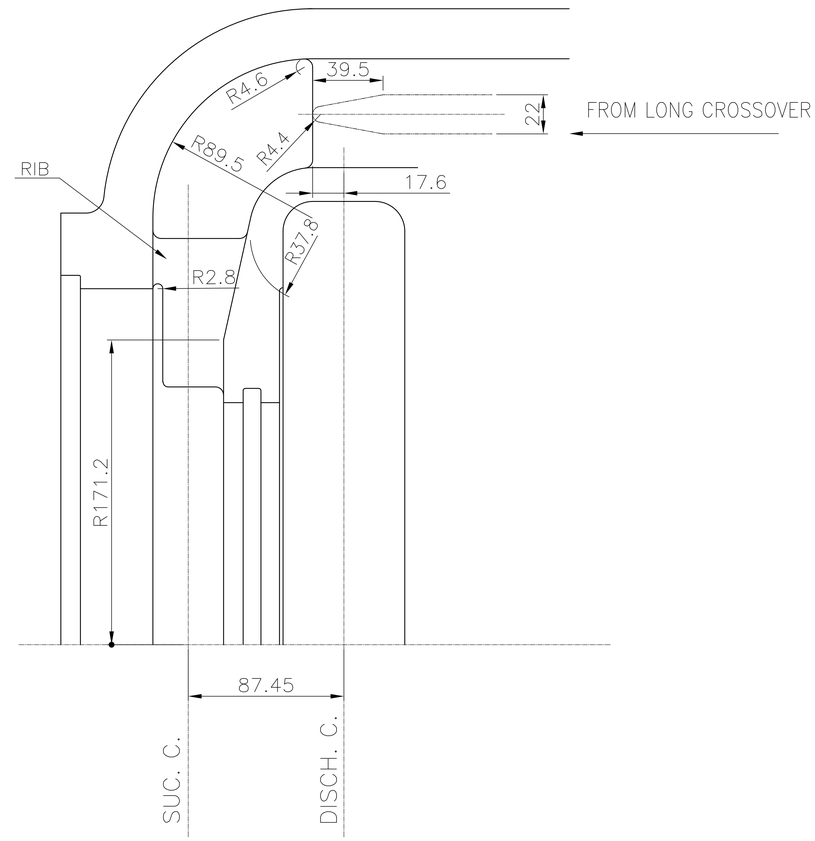

SECTION—AA

ITEM NO	DESCRIPTION	DRAWING NO.	VAR. NO.	RAW MATERIAL SIZE OR CASTING DRG.NO. OR FORGING DRG.NO.	MATERIAL CODE / MATERIAL SPECN.	NET WT.	GROSS WT. / QUANTITY

THE FOLLOWING CONDITIONS APPLY EXCEPT OTHERWISE STATED.

1. REF.TO HY0230261 FOR UNS. TOLERANCES.
2. CHAMFER M/CD SHARP EDGE 1.2 TO 1.0 AT 45°.
3. INTERNAL M/CD CORNER RADII 1 TO 0.7.
4. THE SURFACE ROUGHNESS WHEREVER NOT SHOWN SHALL BE TAKEN FROM THE SURFACE ROUGHNESS SHOWN OUT SIDE BACK SLASHES GIVEN AT THE TOP MOST RIGHT CORNER OF THE DRG.

TYPE OF PRODUCT OR NAME OF CUSTOMER/PROJECT: MDG406

भारत हैवी इलेक्ट्रिकल्स लिमिटेड हैदराबाद
BHARAT HEAVY ELECTRICALS LTD. HYDERABAD

	NAME	SIGN.	DATE	NO.OF VAR.
DRN.	AS KALYAN		05.06.20	
CHD.	AS KARTHIK		05.06.20	
APPD.	MS RAM		05.06.20	

DEPT.	PUMPS	SCALE	NTS	WEIGHT (KG)	REF. TO ASSY DRG.	ITEM NO.	NO.OF ITEMS
CODE	410			–NA–	–NA–	–NA–	–NA–

TITLE: INNER CASING SUCTION VOLUTE

DRAWING NO. 0 180 42 1 4679 REV. 00

SHEET NO. 01 NO OF SHEETS 01

REV.	DATE	ALTERED	CHECKED	APPD.	ZONE

THE INFORMATION ON THIS DOCUMENT IS THE PROPERTY OF BHARAT HEAVY ELECTRICALS LIMITED.
IT MUST NOT BE USED DIRECTLY OR INDIRECTLY IN ANY WAY DETRIMENTAL TO THE INTREST OF THE COMPANY

INVENTORY NO | SIGN. AND DATE | REF. DRG. NO. | COMPUTER FILE NAME

Jun Sat 6 13:37 2020

This Drawing is printed from Engineering Digital Archive System (EDAS).
Therefore signatures are not essentially required.