FIRST ANGLE PROJECTION

(ALL DIMENSIONS ARE IN mm)

DRG. NO. 0 180 421 4677

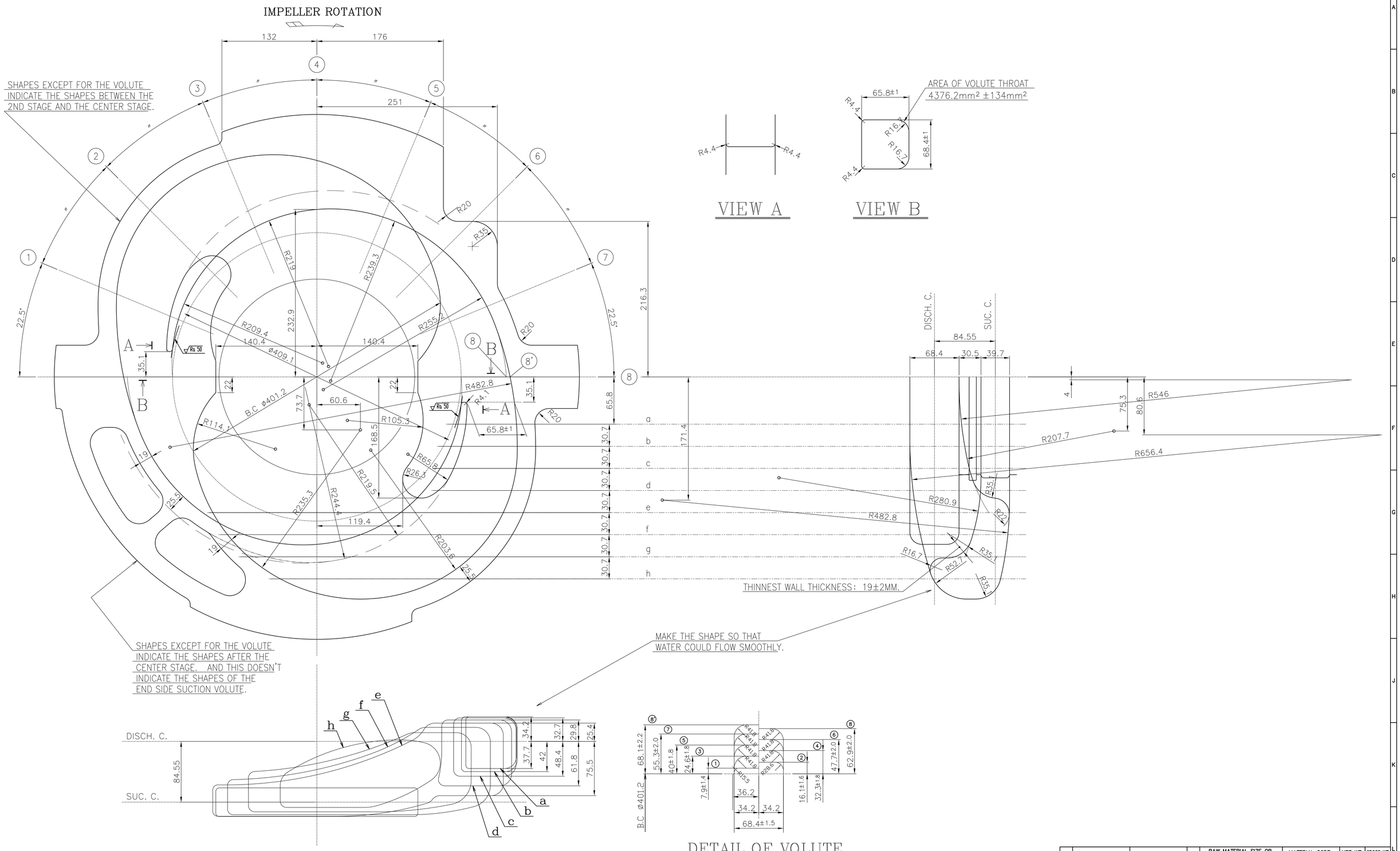

ITEM NO	DESCRIPTION	DRAWING NO.	VAR. NO.	RAW MATERIAL SIZE OR CASTING DRG.NO. OR FORGING DRG.NO.	MATERIAL CODE / MATERIAL SPECN.	NET WT.	GROSS WT. / QUANTITY

THE FOLLOWING CONDITIONS APPLY EXCEPT OTHERWISE STATED

1. REF.TO HY0230261 FOR UNS. TOLERANCES.
2. CHAMFER M/CD SHARP EDGE 1.2 TO 1.0 AT 45°.
3. INTERNAL M/CD CORNER RADII 1 TO 0.7.
4. THE SURFACE ROUGHNESS WHEREVER NOT SHOWN SHALL BE TAKEN FROM THE SURFACE ROUGHNESS SHOWN OUT SIDE BACK SLASHES GIVEN AT THE TOP MOST RIGHT CORNER OF THE DRG.

TYPE OF PRODUCT OR NAME OF CUSTOMER/PROJECT: MDG406

भारत हैवी इलेक्ट्रिकल्स लिमिटेड हैदराबाद
BHARAT HEAVY ELECTRICALS LTD. HYDERABAD

	NAME	SIGN.	DATE	NO.OF VAR.
DRN.	AS KALYAN		05.06.20	
CHD.	AS KALYAN		05.06.20	–NA–
APPD.	MS RAM		05.06.20	

DEPT.	PUMPS	SCALE	WEIGHT (KG)	REF. TO ASSY DRG.	ITEM NO.	NO.OF ITEMS
CODE	410	NA	–NA–	–NA–	–NA–	–NA–

TITLE: INNER CASING STD STAGE VOLUTE & SHORT CLOSSOVER

DRAWING NO. 0 180 42 1 4677 — REV. 00

SHEET NO. 01 — NO OF SHEETS 01

REV.	DATE	ALTERED	CHECKED	APPD.	ZONE

INVENTORY NO | SIGN. AND DATE | REF. DRG. NO. 0 180 421 4677 | COMPUTER FILE NAME FDP0PU5410V1-00

THE INFORMATION ON THIS DOCUMENT IS THE PROPERTY OF BHARAT HEAVY ELECTRICALS LIMITED. IT MUST NOT BE USED DIRECTLY OR INDIRECTLY IN ANY WAY DETRIMENTAL TO THE INTREST OF THE COMPANY

Jun Sat 6 13:36 2020

This Drawing is printed from Engineering Digital Archive System (EDAS). Therefore signatures are not essentially required.