FIRST ANGLE PROJECTION

(ALL DIMENSIONS ARE IN mm)

DRG. NO. 1 182 40 1 7012

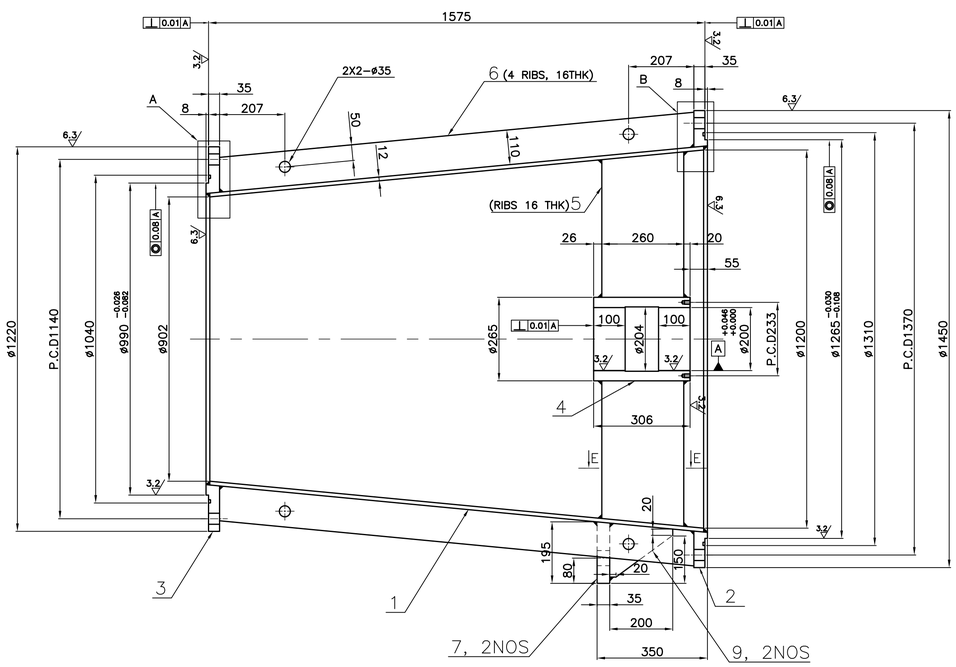

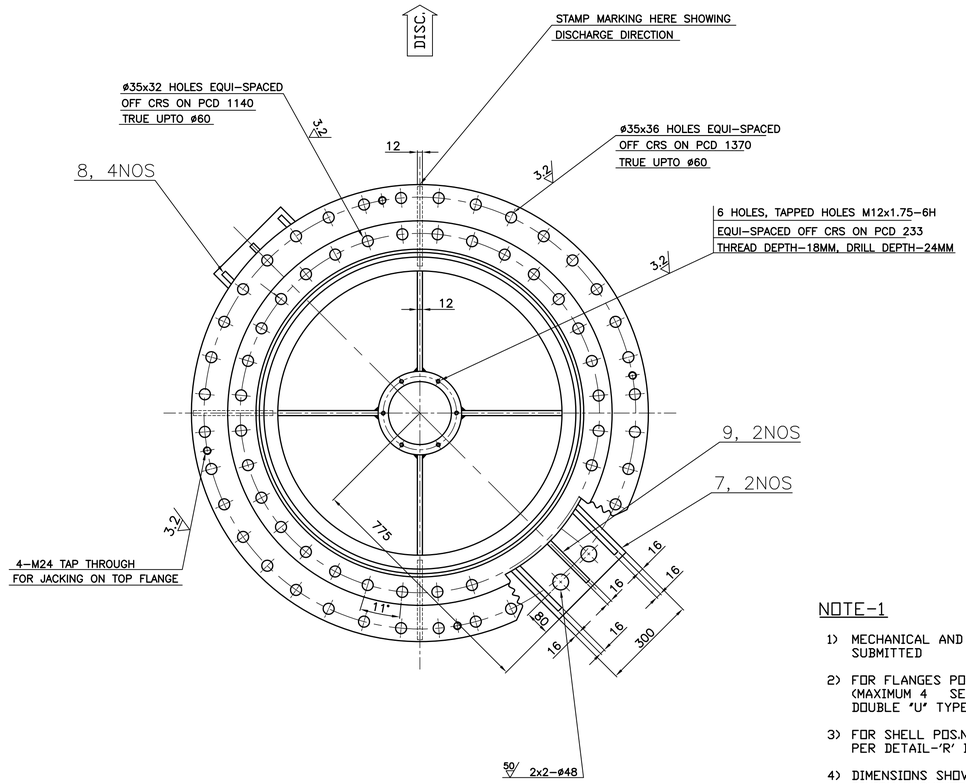

NOTE-1

1) MECHANICAL AND CHEMICAL PROPERTIES REPORT SHALL BE SUBMITTED
2) FOR FLANGES POS.NOs 2&3; SEGMENTAL WELDING IS PERMITTED (MAXIMUM 4 SEGMENTS). SEGMENTS SHALL BE WELDED WITH DOUBLE 'U' TYPE WELDING AS SHOWN IN DETAIL 'D'.
3) FOR SHELL POS.No 1; MAXIMUM 1 NO VERTICAL WELD JOINT AS PER DETAIL-'R' IS PERMITTED.
4) DIMENSIONS SHOWN IN THE FINISH MACHINED DRAWING ARE FINISH MACHINED DIMENSIONS.
5) WELDING AS PER BHEL WELD PROCEDURE SPECN NO. WE-042
6) D.P.T SHALL BE DONE ON 100 % OF WELDS AS PER AA0850131 ACCEPTANCE AS PER AA0850129 LEVEL-IV.
7) R.T TO BE CARRIED OUT ON ALL WELD JOINTS 100 % AS PER THE QUALIFICATION PROCEDURE-ASME SECTION VIII DIV I. UW 51. WPS, PQR AND WELDER QUALIFICATION SHALL BE AS PER ASME SECTION -IX.
8) WHEREVER NOT SPECIFIED, ALL SHARP EDGES TO BE CHAMFERED TO 2x45°.
9) WHEREVER NOT SPECIFIED TOLERANCE ON MACHINED DIMENSIONS AS PER AA0230208 MEDIUM CLASS.
10) COMPONENT SHALL BE PRESSURE TESTED AT 5.5 Kg/Sq. Cm. FOR 30 MINUTES DURATION.
11) DIMENSIONAL INSPECTION REPORT.
12) MACHINED SURFACES SHALL NOT BE PAINTED.
13) MACHINED SURFACES SHALL BE COATED WITH SUITABLE RUST PREVENTIVE COAT AS PER HY0490563, CATEGORY 'B'
14) TO BE PROPERLY PACKED AND DESPATCHED SUCH THAT NO DAMAGE IS CAUSED DURING HANDLING AND TRANSIT.

MATERIAL: DUPLEX SS TO UNS 32750
PREN (%CR+3.3%Mo+16%N) > 38

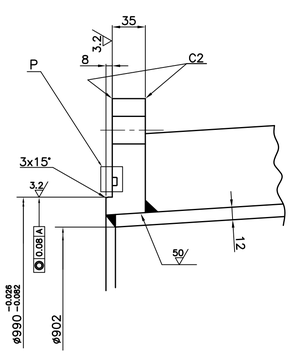

DETAIL-A

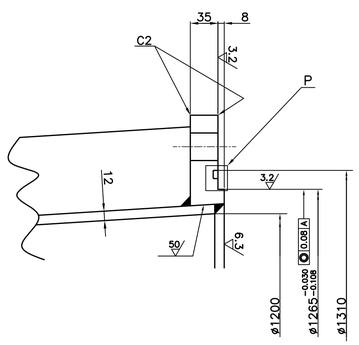

DETAIL-B

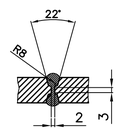

DETAIL-'D'

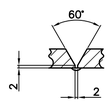

WELD DETAIL-R

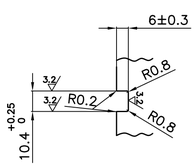

DETAIL-P

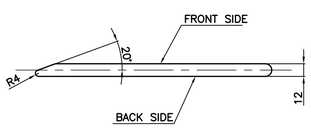

FOR KARMAN VORTEX BREAK

DETAIL-EE

ITEM NO	DESCRIPTION	DRAWING NO.	VAR. NO.	RAW MATERIAL SIZE OR CASTING DRG.NO. OR FORGING DRG.NO.	MATERIAL CODE / MATERIAL SPECN.	NET WT. / QUANTITY	GROSS WT.
01	ELEMENT-I	1 182 40 1 7012			FP9712035093 / DUPLEX SS 2205 TO UNS 32750	1000 / 1	1000

THE FOLLOWING CONDITIONS APPLY EXCEPT OTHERWISE STATED

1. REF.TO HY0230261 FOR UNSPECIFIED TOLERANCES.
2. CHAMFER M/CD SHARP EDGES 1.2 TO 1.0 AT 45°.
3. INTERNAL M/CD CORNER RADII 1 TO 0.7.
4. THE SURFACE ROUGHNESS WHEREVER NOT SHOWN SHALL BE TAKEN FROM THE SURFACE ROUGHNESS SHOWN OUT SIDE BACK SLASHES GIVEN AT THE TOP MOST RIGHT CORNER OF THE DRG.

BHEL-HYD SAP

TYPE OF PRODUCT OR NAME OF CUSTOMER/PROJECT: CW10M OUTFALL PUMP

भारत हेवी इलेक्ट्रिकल्स लिमिटेड हैदराबाद
BHARAT HEAVY ELECTRICALS LTD. HYDERABAD

	NAME	SIGN.	DATE	NO.OF VAR.
DRN.	SRINIVAS	SRINIVAS	01.11.21	
CHD.	SATISH	SATISH	01.11.21	
APPD.	MSRAM	MSRAM	01.11.21	

RESTRICTED USE

DEPT.	PUMPS	SCALE	WEIGHT (KG)	REF. TO ASSY DRG.	ITEM NO.	NO.OF ITEMS
CODE	410	N.T.S	1000	-NA-	-NA-	-NA-

TITLE: ELEMENT-I

DRAWING NO. 1 182 40 1 7012 REV. 00

SHEET NO. / NO OF SHEETS

REV.	DATE	ALTERED	CHECKED	APPD.	ZONE

THE INFORMATION ON THIS DOCUMENT IS THE PROPERTY OF BHARAT HEAVY ELECTRICALS LIMITED.
IT MUST NOT BE USED DIRECTLY OR INDIRECTLY IN ANY WAY DETRIMENTAL TO THE INTEREST OF THE COMPANY

COMPUTER FILE NAME : | REF. DRG. NO. | SIGN. AND DATE | INVENTORY NO

Nov Tue 2 10:00 2021

This Drawing is printed from Engineering Digital Archive System (EDAS).
Therefore signatures are not essentially required.