| | | |
|---|---|---|
| | **Bharat Heavy Electricals Limited**<br>Industrial Valves Plant<br>Goindwal Sahib (Punjab) | **Enquiry No.**<br>**2526-058E**<br>**Date:**<br>**11.10.2025** |

## NOTICE INVITING TENDER (NIT)

Dear Sir / Madam,

BHEL Goindwal Sahib (Punjab) invites offers from interested bidders / suppliers for submission of their offer through e-procurement mode at https://eprocurebhel.co.in/. Offers in any other mode will not be accepted. In case of any difficulty faced while registering on BHEL's e-Procurement portal developed by NIC, queries may be addressed to 0120-4001002, 0120-4001005 and 0120-6277787; email: support-eproc@nic.in. These details are also available on 'Contact Us' page of the portal.

| | |
|---|---|
| **Tender enquiry no. & date** | 2526-058E dated 11.10.2025 |
| **Form of contract** | Supply |
| **Tender / Item description** | Metal End Covers |
| **Material standard / Drawings** | As per attached TDC(s), Drawings and BPS. |
| **Location(s) of Supply / Work** | BHEL, IVP Goindwal, Punjab – 143422, India. |
| **Earnest Money Deposit (EMD)** | Not Applicable |
| **Performance Security (PS)** | Not Applicable (Refer Sr. no. 13 of GCC of tender terms) |
| **Quotation parts** | Two Part Bid |
| **Tender download / Bid submission start date** | **11.10.2025 (17:00 Hrs. IST)** |
| **Tender download / Bid submission end date** | **21.10.2025 (12:00 Hrs. IST)** |
| **Tender / Bid opening date** | **21.10.2025 (15:30 Hrs. IST)** |
| **Validity of offer (In days)** | 75 days from techno commercial bid opening (Part I) |
| **Quantity variation** | +/- 10% of tender quantity |
| **Delivery schedule** | Within 90 Days from the date of PO placement / LOI |
| **Tender evaluation** | Item Wise as detailed in Special Terms and Conditions |
| **Reverse auction** | Applicable |
| **Make In India (MII) Purchase Preference** | Applicable |
| **MSE reserved** | Items are not reserved for MSE Manufactures |
| **Contact person details** | Ranveer Singh, Manager<br>01859-224 630, ranveer.singh@bhel.in<br><br>Rajesh Kumar, Sr. Manager<br>01859-224 618, kumarrajesh@bhel.in |

# SPECIAL TERMS AND CONDITIONS

**Tender Enquiry No. 2526-058E** Dated 11.10.2025 **Due date 21.10.2025**
**Tender Description:** Supply of Metal End Cover

**NOTE: Please Fill the attached Techno Commercial Bid MS -Excel File and upload in the .pdf format while uploading the quotation on NIC Portal.**

## S1. SCOPE OF SUPPLY

Material shall be supplied as per the applicable TDC/drawing as mentioned in the Table- 1. National & International material standards shall have to be arranged by bidders themselves.

**Table 1 : List of Items along with Applicable TDC (Technical Delivery Condition) and Drawing / BPS / IS Standard Number.**

| Item No. | Material Code | Material Description | Quantity Required (Unit-Nos.) | Drawing No./BPS No. /Rev No | Delivery period | Quantity variation in +/- % of tender Quantity | Raw Material Industry Std Desc. |
|---|---|---|---|---|---|---|---|
| 1 | 964652780000 | METAL END COVER-2885 | 1200 | 2-V-2885-14336/02 | Within 90 days from PO/LOI | '+/-10% | IS1079 HR1 |
| 2 | 964652840000 | METAL END COVER-2886 | 200 | 2-V-2886-14336/02 | | | |
| 3 | 964652900000 | METAL END COVER-2887 | 400 | 2-V-2887-14336/02 | | | |
| 4 | 964652950000 | METAL END COVER-2888 | 240 | 2-V-2888-14336/02 | | | |
| 5 | 964652980000 | METAL END COVER-N235 | 250 | 2-V-N235-14336/02 | | | |
| 6 | 964652790000 | METAL END COVER-N289 | 1600 | 2-V-N289-14336/02 | | | |
| 7 | 964653040000 | METAL END COVER-N575 | 250 | 2-V-N575-14336/02 | | | |
| 8 | 964653020000 | METAL END COVER-N593 | 60 | 2-V-N593-14336/02 | | | |
| 9 | 964653030000 | METAL END COVER-N594 | 1000 | 2-V-N594-14336/02 | | | |
| 10 | 964653060000 | METAL END COVER-N595 | 50 | 2-V-N595-14336/02 | | | |
| 11 | 964653070000 | METAL END COVER-N805 | 30 | 2-V-N805-14336/02 | | | |
| 12 | 964650010000 | METAL END COVER-N826 | 30 | 3-V-N826-23461/03 | | | |
| 13 | 964653000000 | METAL END COVER-N903 | 200 | 2-V-N903-14336/02 | | | |
| 14 | 964530040000 | METAL. END COVER-G004 | 480 | 2-V-G004-15483/03 | | | |
| 15 | 964530010000 | METAL. END COVER-G041 | 120 | 2-V-G041-15483/03 | | | |
| 16 | 964530140000 | METAL. END COVER-W441 | 80 | 2-V-W441-15483/03 | | | |

**For detail technical requirement please check applicable drawing/TDC/BPS/IS standard as mentioned in above list of items.**

## S2. PRE-QUALIFICATION CRITERIA (PQC)

Bidder has to submit following documents to fulfil PQC:

1. Supplier shall be manufacturer of Sheet Metalwork /Fabrication Items. Offers from Traders/Dealers/Stockists/agents will summarily be rejected. Manufacturer to upload undertaking/ UDYAM Certificate/ISO certificate/ any other documentary evidence for being manufacturer of Sheet Metalwork

/Fabrication Items manufacturer is required to fulfil this criterion. Manufacturers shall provide list of inhouse machinery available to prove Sheet Metalwork / Fabrication item manufacturing.

**2.** Bidder should have successfully supplied any type of 'Sheet Metalwork / Fabrication Items' against any customer purchase order(s)/Job work order(s) with minimum cumulative order value of ₹ 1,00,000.00 (Rupees One Lakh only). All mentioned values are net of taxes. Relevant purchase orders and their respective invoice (s)/CRAC(s) shall be enclosed as a proof. Date of Purchase Order/s date & corresponding invoice(s)/CRAC(s) should be from date 01.10.2022 onward and up to the date of actual bid opening. Also, please note that the proof of execution like Invoice / Consignee Receipt Note / Completion Certificate must include the Purchase Order reference number, otherwise that PO will not be considered for the fulfilment of this tender term.

Start-ups shall be exempted from this criterion of Purchase order and invoice submission without any relaxation in quality standards or technical parameters as per D.O. No. 5(4)/2016-BE-I dated 15.02.2017. For claiming Start-Up exemption, vendors have to submit DPIIT (Dept. of Promotion of Industry and Internal Trade)/DIPP (Department for Industrial Policy and Promotion) recognition certificates.

## S3. PART-I: TECHNO-COMMERCIAL BID

This tender is through e-procurement mode for supply of "Metal End Cover" as per specifications mentioned in below tender terms. Bidder has to submit their offer on BHEL e-Procurement portal at https://eprocurebhel.co.in/. Offer in any other mode will not be accepted. Please refer clause no. 1.2 of General Contract Conditions of MM Tenders (GCC), regarding instructions to bidder for submission of offer on BHEL e-procurement portal.

Tenders shall be submitted in Two parts on or before the due date and time indicated in the NIT

**Part-I: Techno-Commercial Bid**
Bid should contain all the documents/confirmations as per following details:

a) Acceptance of Techno-Commercial terms and conditions shall be attached along with bid document (Duly filled Part-I Techno-Commercial Bid Questionnaire)

*IF THE OFFER IS NOT ACCOMPANIED WITH ACCEPTANCE OF TERMS AND CONDITIONS, IT SHALL BE CONCLUDED THAT ALL THE TERMS AND CONDITIONS ARE ACCEPTABLE AND NO CLAIM WHATSOEVER SHALL BE ENTERTAINED LATER ON.*

*IF THERE IS ANY DEVIATION IN REFERENCE TO ANY OF THE TENDER TERM, KINDLY MENTION IN PART-I TECHNO-COMMCERICAL BID ONLY. DEVIATION SPECIFIED ELSEWHERE, WILL NOT BE CONSIDERED.*

b) Documents as per Pre-Qualification Criteria (PQC).

**Part-II: Price Bid**
Price Bid as per the attached format.

## S4. REVERSE AUCTION

Reverse auction will be conducted in this tender enquiry.

## S5. DELIVERY SCHEDULE

Delivery shall be within 90 Days from date of Purchase Order/ Letter of Intent. Quotation of bidder not accepting delivery terms, shall be rejected.

## S6. LOADING CRITERIA CUM COUNTER OFFER

No counter-offer will be given in this Tender Enquiry except MSE/MII purchase preference.

## S7. INSPECTION

Inspection will be done as per drawings/ documents of tender by BHEL / BHEL nominated TPI (Third party inspection), inspection agency charges will be borne by BHEL. MTC's, inspection reports to submitted to BHEL after inspection along with supplies.

## S8. GRIEVANCE REDRESSAL MECHANISM

To promote transparency and ensure fair treatment of all bidders, a structured Grievance Redressal Mechanism is in place to address any concerns or issues arising during the tendering process or in subsequent business dealings with the company.

Suppliers/Contractors are requested to follow the below escalation process for grievance resolution:

1. **First Level**: Any grievance should initially be addressed to the designated Dealing Officer, whose contact details are provided in the Notice Inviting Tender (NIT)/Contract.
2. **Second Level**: If the issue remains unresolved, it may be escalated by lodging a formal grievance through the SUVIDHA Portal: https://suvidha.bhel.in/suvidha/. Responses will be provided in accordance with the defined escalation matrix.

## S9. VENDOR REGISTRATION

Bidders, who are not currently on registered list of BHEL IVP Goindwal Sahib, are advised to submit their application for vendor registration through online system on www.bhel.com. Direct link for online supplier registration is https://supplier.bhel.in/. This application submission can be done separately/immediately without waiting for the tender opening.

## S10. VALIDITY OF OFFERS

The offers shall be kept valid for 75 days from the actual date of techno-commercial (Part-I) bid opening.

## S11. PRICE BASIS

a. Rates shall be quoted on rate INR per Unit basis, Net of taxes & on FOR BHEL IVP Basis. Comparison shall be made on landed rate per Unit. Evaluation shall be done line item wise as per above Table -1.

b. Order of enquiry item Sl. no. shall be maintained in the quotation.

## S12. QUANTITY VARIATION

+/- 10% Variation in the quantity is applicable for all the items

## S13. Key Points for Supply / Works / Service Invoices in SUVIDHA for supplier/contractor

SUVIDHA Portal Link (https://suvidha.bhel.in/suvidha/)

1. **Registration of all supply / works / service invoices**, irrespective of the invoice amount, is **mandatory** in SUVIDHA.
2. **For net invoice amount exceeding ₹5 lakhs (including taxes):**
   - Upload of **Class 3 Digitally Signed Tax Invoice** is **mandatory**.
   - All other documents as per the **PO checklist** must also be uploaded.
   - However, if any other **digitally signed document** is specified in the PO checklist , then **Class 3 Digitally Signed document is mandatory for uploading**
3. **For net invoice amount up to ₹5 lakhs (including taxes):**
   - Upload of all documents as per the **PO checklist** is **mandatory**.
   - All Documents **can be uploaded without a digital signature**.
   - However, if a **digitally signed document** is specified in the PO checklist but a **non-digitally signed** version is uploaded, the **hard copy must be submitted**.

**These Special terms & conditions along with NIT and General Contract Conditions (GCC) collectively are the part of tender terms and conditions.**

## *TABLE OF CONTENTS*


1. Instruction to Bidder ..... 2
2. Scope of Supply ..... 2
3. Price Basis ..... 3
4. Taxes & Duties ..... 3
5. Evaluation in Case of More Than One L-1 Bidder ..... 4
6. Inspection ..... 4
7. Delivery Schedule ..... 5
8. Reverse Auction ..... 5
9. Payment Terms ..... 5
10. Supplied Material Adjustment ..... 6
11. Treatment of cases regarding Conflict of Interest ..... 6
12. Validity of Offers ..... 7
13. Performance Security (PS) ..... 7
14. Breach of contract, Remedies and Termination ..... 8
15. Acceptance of Material Supplied ..... 8
16. Warrantee and Corresponding Repair / Replacement of Goods ..... 9
17. Preferences for Micro and Small Enterprises (MSEs) ..... 10
18. Liquidated Damage (LD) ..... 10
19. Liability Under Reverse Charge (RCM) ..... 11
20. Preference to Make in India ..... 11
21. Resolution of Disputes ..... 11
22. Access to Manufacturing Premises ..... 13
23. Force Majeure ..... 13
24. Non-Disclosure Agreement ..... 13
25. Preventive Checks to Eliminate Suspected Cartel Formation ..... 14
26. Fraud Prevention Policy ..... 14
27. Suspension of Business Dealings with Suppliers / Contractors ..... 14
28. Discrepancy in Words and Figures ..... 15
29. LOI (Letter of Intent) ..... 15
30. Sub-Contract ..... 15
31. Clarifications ..... 16
32. Restrictions Under Rule 144(XI) of The General Financial Rules (GFR), 2017 ..... 16
33. General ..... 17
34. Treatment in Case of Dealer Acceptance ..... 19
35. Enclosure ..... 19



Signature Not Verified
AMAN SHARMA
22.08.2025 12:35

## 1. Instruction to Bidder

Quotations shall be submitted before due date and time. Late offers are liable to be rejected, so please ensure to submit bid well within due date and time. Techno-commercial part will be opened on due date.

**Based on evaluation of techno-commercial offers, Price bids of bidders who qualify from techno-commercial evaluation shall be opened. BHEL may decide to open the Price bid same day at 1700 hrs. If not opened on the same day, all qualifying bidders shall be notified for date of opening of Price bids by email/fax/post/courier/E-procurement system generated email.**

### 1.1 Instruction to Bidder (In case of Non-E-Procurement / Paper/ Manual/ Hard Copy based tenders)

Sealed Tenders can be dropped in the tender box labeled as 'Tender box for MM contracts.' This tender box is located at the entrance of Admin block BHEL Goindwal. Quotations can also be submitted through e-mail at **tendermm_ivp@bhel.in**. Offers received in time shall be considered only when offers are complete in all respects. In case of bulky tenders, please handover quotation to tender issuing authority [Contact: 01859 224 615/ 618]. Bid can be sent to following address:

**BHEL, Industrial Valve Plant,**
**#433, Industrial Complex,**
**Goindwal Sahib, Distt. Tarn Taran,**
**Punjab-143422.**

### 1.2 Instruction to bidder (In case of E-Procurement)

1. Interested bidders / suppliers shall submit their offer through e-procurement mode at https://eprocurebhel.co.in/ .
2. **Offers in any other mode will not be accepted**.
3. Procedure for submission of tender is available in the "Bidder Manual Kit" at e-tender portal https://eprocurebhel.co.in/ .
4. In case of any difficulty faced while registering on BHEL's e-Procurement portal developed by NIC, queries may be addressed to 0120-4001002, 0120-4001005 and 0120-6277787; email: support-eproc@nic.in. These details are also available on 'Contact Us' page of the portal.
5. Before uploading scanned documents if any, the bidders shall sign on all the statements, documents, certificates uploaded by him, owning responsibility for their correctness / authenticity.
6. **Disclaimer clause:** Neither the Organization (Bharat Heavy Electricals Ltd.) nor the service provider is responsible for any failure of submission of bids due to failure of internet or other connectivity problems or reasons thereof.

## 2. Scope of Supply

Material shall be supplied as per the applicable latest Technical Delivery Conditions (TDC)/ Material Standard requirements/BPS/Drawing and other requirement as given in the Tender Enquiry. National & International material Standards shall have to be arranged by vendors themselves. Latest applicable revisions of standards/procedures to be referred.

Signature Not Verified
AMAN SHARMA
22.08.2025 12:35

All required tests as called in referred material standard/BHEL/TDC/drawing etc. shall be carried out by vendor at no extra cost. Material Test Certificates (MTC), inspection reports and Compliance/Guarantee Certificate are to be provided along with the supplies.

## 3. Price Basis

1. Order of enquiry item sl. no. shall be maintained in the quotation.
2. The rates quoted shall be firm and fixed. No price variation is proposed and allowed.
3. Rates quoted should be FOR BHEL Goindwal basis. The offers quoted on other than FOR Goindwal basis are liable to be rejected.
   In case bidder has quoted Ex-works prices, then he/she will be given an opportunity to accept price basis as FOR Goindwal either by accepting delivery as FOR Goindwal in same quoted price or by providing loading factor on his/her quoted ex-works prices to make them FOR prices.

   **Variation in GST or any other statutory levies during contractual delivery period shall be to BHEL's account.**

## 4. Taxes & Duties

Payment of GST portion will be released to vendor only upon completion of statutory requirement and further subject to following:

a) Vendor declaring such invoice in his GSTR-1and
b) Receipt of goods and Tax invoice by BHEL and
c) Confirmation of payment of GST thereon by vendor on GSTN portal.
d) Above is subject to receipt of goods/service and tax invoice thereof along with vendor declaring invoice in his return and paying GST within timeline prescribed for availing ITC by BHEL.

Following may please be noted for availing Input Tax Credit (ITC) by BHEL:

1. Since ITC can be availed only when BHEL is in possession of GST Tax invoice and after receipt of goods. Thus, vendor to ensure timely dispatch of goods and Tax invoice. It may be noted that in case of any delay in receipt of Tax Invoice and/or receipt of goods, the ITC availment by BHEL will get delayed thus entailing additional cash outflow & may even get denied if ITC availment timelines are breached.
2. Further ITC can be availed only when vendor has declared such invoice in his outward supply Return GSTR-1 and after GST thereon has been paid by him at the time of filing of monthly Return.
3. If GST credit is delayed/denied to BHEL due to non/delayed receipt of goods and/or tax invoice or expiry of timeline prescribed in GST law for availing such ITC, or any other reasons not attributable to BHEL, GST amount shall be recoverable from vendor along with interest levied/leviable on BHEL.
4. Further, in case vendor delays declaring such invoice in his return and GST credit availed by BHEL is denied or reversed subsequently as per GST law, GST amount paid by BHEL towards such ITC reversal as per GST law shall be recoverable from vendor/contractor along with interest levied/leviable on BHEL.

   **<u>GST Law Provision in 'Bill to Ship to' Case</u>**

Signature Not Verified
AMAN SHARMA
22.08.2025 12:35

In case where delivery destination is other than BHEL IVP Goindwal, then the following clause is also applicable: -
As per the extant provisions of Sec. 12(2), read with Sec. 31(1) of CGST Act, 2017, the time limit to raise GST invoice is till the time of removal of goods (where the supply involves movement of goods).
Accordingly, it has been reiterated that customer (BHEL's Customer) billing is also to be done by BHEL at the time of vendor's billing on BHEL on removal of goods from vendor's works and GST liability is to be discharged thereof.
Hence, Vendor is required to inform BHEL at the time of billing/removal of goods. In the case where BHEL is get penalized by GST authority, due to delay in generating the invoice and the core reason for this delay is attributable to supplier, then the penalty imposed on BHEL by GST authorities will be pass on to supplier and deduction will be done from the pending dues of supplier with BHEL.

## 5. Evaluation in Case of More Than One L-1 Bidder

In the course of evaluation, if more than one bidder happens to occupy L1 status, effective L1 will be decided by soliciting discounts from the respective L1 bidders.
In case more than one bidder happens to occupy the L1 status even after soliciting discounts, the L1 bidder shall be decided by a toss / draw of lots, in the presence of the respective L1 bidder(s) or their representative(s).
Ranking will be done accordingly. BHEL's decision in such situations shall be final and binding.

## 6. Inspection

1. The seller shall give adequate notice, of 1 week or as mutually agreed period, in writing to the Purchaser about the date and place at which the goods will be ready for inspection/ testing, as provided for in the contract.
2. Purchaser or his authorized representative shall be entitled to carry out inspection of material and workmanship/Surveillance Audit at Seller's premises or at his sub-contractor's premises at all reasonable times during execution of contract; Such inspection, examination and testing, if made, shall not absolve the Seller from his obligations under the contract. No additional charges shall be claimed for such inspections. Moreover, all required infrastructure (testing, tools etc) have to be arranged by supplier.
3. Any inspection carried out before supply by vendor/incoming stage at BHEL notwithstanding, if any defect/non-conformity is noted during processing, the same shall be attended/replaced by vendor at no extra cost.
4. BHEL representative from unit or CQ is authorized to carry out audits along with TPIA at vendor's works before clearing the items for dispatch.
5. Necessary tooling including thread gauges etc. have to be arranged by vendor. Only in exceptional cases, based on BHEL discretions item/nature, BHEL may consider request to provide gauges if available with BHEL. But in no case this shall be linked with delivery of material.
6. In case of following points, visit charges to be paid to Third Party Inspection Agency (TPIA) shall be imposed as penalty on Supplier:

Signature Not Verified
AMAN SHARMA
22.08.2025 12:35

a) Nothing/NIL material is offered during Inspection (whilst physical visit of Inspection Engineer at Supplier's work) with respect to "Offered Quantity" mentioned in raised Inspection Call.
b) Lapses on the account of supplier has led to rejection of offered material (as per approved QAP/ Technical Specifications/ Other pertinent requirement), while carrying out Inspection.
c) Less Quantity/ Short Quantity is offered during Inspection (whilst physical visit of Inspection Engineer at Supplier's work) with respect to "Offered Quantity" mentioned in raised Inspection Call for any of the line(s) item, leading to re-visit of Inspection Engineer.

## 7. Delivery Schedule

Supplies shall be affected and completed as per schedule mentioned in special terms and conditions. Commencement of delivery period shall be reckoned from the date of PO / LOI or any other agreed milestone.
In case of non-acceptance of delivery schedule, supplier bid is liable to be rejected.

## 8. Reverse Auction

In case, it is declared in special terms & conditions of tender enquiry that RA is applicable for the NIT, then RA will be conducted as per following clause:

BHEL shall be resorting to Reverse Auction (RA) (Guidelines as available on https://www.bhel.com/) for this tender. RA shall be conducted among the techno-commercially qualified bidders as per RA guidelines.
Price bids of all techno-commercially qualified bidders shall be opened and same shall be considered for RA. In case any bidder(s) do(es) not participate in online Reverse Auction, their sealed envelope price bid along with applicable loading, if any, shall be considered for ranking.

## 9. Payment Terms

1. Payments shall be made to the Seller (MSE / Non MSE) within the mentioned days (as per below table) from the Payment Due date. Vehicle entry date at BHEL Units / Sites / other delivery destinations as mentioned on Lorry Receipt (LR) copy shall be taken as Payment due date.

| Type of Bidder | Payment Terms (Number of days) |
|---|---|
| Micro & Small Enterprises (MSEs) | 45 days |
| Medium Enterprises | 60 days |
| Non MSME | 90 days |

In case there is shortfall in documents/deficiency in material as per the tender terms/purchase orders, the same shall be notified by BHEL to supplier. Payment due date shall be revised accordingly considering submission of all documents/removal of deficiency by supplier.

For availing MSE benefits, latest copy of Udyam certificate shall be submitted.

Signature Not Verified
AMAN SHARMA
22.08.2025 12:35

**MSME bidders can avail benefits of payment through TReDS (Trade Receivable e Discounting System).**

In case of any deviation from standard payment term mentioned above, BHEL shall load on the item price at ''Base rate of SBI (as applicable on the date of bid opening; Techno-commercial bid opening) + 6% for the period of relaxation sought by bidders.

2. Documents to be submitted (if applicable)
   i) Tax invoice (Invoice shall be GST compliant and should contains all the required information such as GST No, HSN code etc.)
   ii) Transporter copy along with material/consignment. In case material is delivered at location other than BHEL Goindwal, then LR receipt/acknowledgement is required.
   iii) Material Test Certificates (MTC) and
   iv) Compliance Certificate.

Any additional document required shall be mentioned in special terms & conditions.

3. GST registration number is to be submitted by qualified vendor as per GST law.
4. It is mandatory to mention proper material codes in the invoices and separate invoices to be raised for different POs.
5. **BHEL releases payment through EFT mode ONLY. Necessary details may please be submitted by filling required format before release of payment.**

## 10. Supplied Material Adjustment

Item/s pending in previous PO has to be billed in previous PO only. Otherwise, BHEL will be free to adjust the supplies in previous PO. Any implication of tax will be on supplier's account. For this it is desirable that vendor should reconcile the pending PO statement every month/frequently with BHEL. Vendor can also view these details at Portal (https://trichy.bhel.com/mm/index.jsp).

## 11. Treatment of cases regarding Conflict of Interest

The bidder notes that a conflict of interest would said to have occurred in the tender process and execution of the resultant contract, in case of any of the following situations:

i) If its personnel have a close personal, financial, or business relationship with any personnel of BHEL who are directly or indirectly related to the procurement or execution process of the contract, which can affect the decision of BHEL directly or indirectly;

ii) The bidder (or his allied firm) provided services for the need assessment/ procurement planning of the Tender process in which it is participating;

iii) Procurement of goods directly from the manufacturers/ suppliers shall be preferred. However, if the OEM/ Principal insists on engaging the services of an agent, such agent shall not be allowed to represent more than one manufacturer/ supplier in the same tender. Moreover, either the agent could bid on behalf of the manufacturer/ supplier or the manufacturer/ supplier could bid directly but not both. In case bids are received from both the manufacturer/ supplier and the agent, bid received from the agent shall be ignored. However, this shall not debar more than one Authorized distributor (with/ or without the OEM). from quoting equipment manufactured by an Original Equipment Manufacturer (OEM) in procurements under a Proprietary Article Certificate.

Signature Not Verified
AMAN SHARMA
22.08.2025 12:35

iv) A bidder participates in more than one bid in this tender process. Participation in any capacity by a Bidder (including the participation of a Bidder as a partner/ JV member or sub-contractor in another bid or vice-versa) in more than one bid shall result in the disqualification of all bids in which he is a party. However, this does not limit the participation of an entity as a sub-contractor in more than one bid if he is not bidding independently in his own name or as a member of a JV.

The Bidder declares that they have read and understood the above aspects, and the bidder confirms that such conflict of interest does not exist and undertakes that they will not enter into any illegal or undisclosed agreement or understanding, whether formal or informal with other Bidder{s), in this regard. This applies in particular to prices, specifications, certifications, subsidiary contracts, submission or non-submission of bids or any other actions to restrict competitiveness or to introduce cartelization in the bidding process. **In case, the Bidder is found having indulged in above activities, the same will be considered as a violation of the tender conditions, and suitab1e action shall be taken by BHEL as per extant policies/ guidelines**.

It has to be signed by the authorized signatory of the bidder.

## 12. Validity of Offers

The offers shall be kept open for acceptance 'for number of days mentioned in special terms and conditions' from the date of opening of the tender. In case of tender extension, the bid validity shall be considered from the date of tender opening.

## 13. Performance Security (PS)

Applicability:

1) Performance Security will not be applicable in which total PO value on vendor in one tender enquiry is less than or equal to Rs. twenty lakhs.
2) **(a) In case total PO value on vendor in one tender enquiry is greater than Rs. 20 Lakhs**: Successful bidder (L1 or counter-offer accepted) has to submit Performance Security (PS) @5% of PO value within 21 days from the date of award of PO. PS shall be valid for a period of one year. This PS will be released to the vendor without interest after two months of completion of all supplies under the PO.

**(b) In case total PO value on vendor is equal to or greater than Rs. 2 crores, then b**efore the release of this PS as mentioned in clause 2 (a) above, vendor has to submit another PS of Rs. one lakh after two months of completion of all supplies under the PO. This PS shall be valid for a period of 18 months. This additional PS will be released to the vendor without interest after expiry of validity upon fulfilment of contractual obligations as per terms of contract

Vendor has to submit written request to BHEL for refund of PS well in advance before the due date. Further release of PS as mentioned in 2 (a) will also be subject to submission of additional PS as mentioned in 2 (b) above if applicable.

In case of non-submission of PS for 5% of contract value, it will amount to breach of contract.

**Mode of deposit:**

Signature Not Verified
AMAN SHARMA
22.08.2025 12:35

Performance security may be furnished in the following forms:

1) Local cheques of Scheduled Banks (subject to realization)/ Pay Order/ Demand Draft/ Electronic Fund Transfer in favour of BHEL.
   **Account details:**

| | |
|---|---|
| Bank Name | STATE BANK OF INDIA |
| BRANCH | GOINDWAL SAHIB |
| A/C NO | 40179740806 |
| IFSC CODE | SBIN0010743 |

2) Bank Guarantee from Scheduled Banks / Public Financial Institutions as defined in the Companies Act. The Bank Guarantee format should have the approval of BHEL.
3) Fixed Deposit Receipt issued by Scheduled Banks / Public Financial Institutions as defined in the Companies Act (FDR should be in the name of the Contractor, a/c BHEL).
4) Securities available from Indian Post offices such as National Savings Certificates, Kisan Vikas Patras etc. (held in the name of Contractor furnishing the security and duly endorsed/ hypothecated/ pledged, as applicable, in favour of BHEL).
5) Insurance Surety Bond.
6) By way of retention from dues available in the form of Bills payable to the supplier against same / other contracts in the same unit.

(Note: BHEL will not be liable or responsible in any manner for the collection of interest or renewal of the documents or in any other matter connected therewith).

**Forfeiture of Performance Security:**
The performance security will be forfeited and credited to BHEL's account in the event of a breach of contract by the supplier.

## 14. Breach of contract, Remedies and Termination

In case of breach of contract, wherever the value of security instruments like performance bank guarantee available with BHEL against the said contract is 10% of the contract value or more, such security instruments to the extent of 10% contract value will be encashed. In case the value of the security instruments available is less than 10% of the contract value, the balance amount be recovered in all or any of the following manners:

- from dues available in the form of Bills payable to defaulted supplier against the same contract.
- from the dues payable to defaulted supplier against other contracts in the same Region/Unit /any other region/unit.
- In-case recoveries are not possible with any of the above available options, Legal action shall be initiated for recovery against defaulted supplier.

Further, levy of liquidated damages, debarment, termination, de-scoping, short-closure, etc., shall be applied as per provisions of the contract.

## 15. Acceptance of Material Supplied

1. The supply shall strictly as per the specifications in the tender /purchase order.

Signature Not Verified
AMAN SHARMA
22.08.2025 12:35

2. Delivery of the ordered items as per the delivery terms in the Purchase Order does not automatically constitute acceptance of the delivered items.
3. Acceptance of the materials supplied will be based on the inspection and certification documents by the supplier as stipulated in the Purchase order. However, BHEL reserves the right to test the material supplied, if required, at BHEL Lab or any other approved/accredited lab and the result will be binding on the supplier.
4. The acceptance or otherwise of the delivered items will be separately communicated to the supplier by BHEL through B2B portal within 15 days from the delivery of items or delivery of the required test certificates /other documents whichever is later.
5. In case of rejection of the delivered items, either part or full, the vendor shall replace the rejected items as per the specification in the Purchase order/tender at their cost within 30 days of communication of rejection to the supplier. The supplier shall be given maximum two opportunities to replace the rejected items.
6. After the clearance of the 1st lot, in case of rejection of the delivered items, either part or full, if the supplier fails to replace the rejected items within 30 days of communication of the rejection, the same shall be treated as failure to execute the contract and actions as per the Guidelines for Suspension of Business Dealings with Suppliers /Contractors available in the webpage: https://www.bhel.com would be taken against such supplier.

## 16. Warrantee and Corresponding Repair / Replacement of Goods

Goods shall comply with the specifications for material, workmanship and performance. Unless otherwise specified, vendor shall give a warrantee against design & manufacturing defects for a period of 18 months from the date of receipt. In case of non-acceptance of this term, bid shall be liable for rejection**.**

If the delivery is found non-compliant during the warranty period, leading to rejection, the Seller shall arrange free replacement / repair of goods, within one month from the date of intimation. Corresponding quantity shall be treated as unsupplied against respective purchase order till replacement is received at BHEL. In the event of the Seller's failure to comply, Purchaser may take action as appropriate, including repair / replenish rejected goods, at the cost of the seller as per contractual obligations.

All incidental charges like freight, insurance and customs duty in respect of return of defective items are to vendor's account only. BHEL will inform related invoice, quantity etc. to supplier. Supplier has to give advance intimation / plan (Transporter, Vehicle details) for the lifting of material. Further supplier has to provide requisite documents (such as Credit Note, e-Way Bill etc.) to lift the rejected material. Material should be lifted within one month from date of intimation. After one-month, BHEL will not be responsible for rejected material and BHEL shall have the right to dispose off such rejected material.

The defective parts and components shall be collected by your Indian agent or / authorized person, only after completing the replacement / repairs. If the supplier fails to replace / rectify the defective/ damaged items on free of cost within one month of reporting from our end, the same shall be treated as failure to execute the contract and actions as per the Guidelines for Suspension of Business Dealings with Suppliers /Contractors available in the webpage: https://www.bhel.com would be taken against such

Signature Not Verified
AMAN SHARMA
22.08.2025 12:35

supplier without prejudice to the other remedies available to BHEL under the contract and law in this regard.

## 17. Preferences for Micro and Small Enterprises (MSEs)

Preferences as mentioned in "Public Procurement Policy for Micro and Small Enterprises (MSEs) Order, 2012" & "Public Procurement Policy for Micro and Small Enterprises (MSEs) Amendment Order, 2018", or as per latest guidelines issued by government shall be given to Micro and Small enterprises.

Main points which are mentioned in the above orders are as follows:

- 25% Procurement of the tender value shall be made from MSE (Micro, Small Enterprises) firms.
- 25% of the 25% quantity (i.e. 6.25% of the tender quantity) offered to the MSE's shall be reserved for MSE's owned by SC/STs. Failure to participate by any MSE owned by SC/ST's; this 6.25% quantity shall be procured from other MSEs.
- 3% from within the 25% quantity offered to the MSE's shall be reserved for women owned MSE's. Failure to participate by any MSE owned by women; this 3% quantity shall be procured from other MSEs.
- EMD shall be exempted for MSE's. All these benefits are subject to production of all statutory documents
- In tender, participating Micro and Small Enterprises quoting price within price band of L1+15 per cent shall also be allowed to supply a portion of requirement by bringing down their price to L1 price in a situation where L1 price is from someone other than a Micro and Small Enterprise and such Micro and Small Enterprise shall be allowed to supply up to 25 per cent of total tendered value. In case of more than one such Micro and Small Enterprise, the supply shall be shared proportionately (to tendered quantity).

MSE suppliers can avail the intended benefits only if they submit **Udyam Registration Certificate** along with the offer. No other document shall be considered for availing MSE benefits. Non-submission of such document will lead to consideration of their bid at par with other bidders. No benefit shall be applicable for this enquiry if any deficiency in the above required documents is not cleared before price bid opening. If the tender is to be submitted through e-procurement portal, then the above required document is to be uploaded on the portal.

*Note: It may however be noted that MSE guidelines as on date (Date of Technical Bid Opening Part-1) shall prevail.*

## 18. Liquidated Damage (LD)

1. Time is the essence of the contract.
2. The ordered items shall be delivered as per the delivery period mentioned in the Purchase Order.
3. In case the supplier supplies the ordered items beyond the delivery period specified, Liquidated Damages -LD - as detailed below shall be will be levied from the supplier without prejudice to any other relief /compensation available to BHEL, Punjab under any other condition of the contract/applicable legal provisions.

Signature Not Verified
AMAN SHARMA
22.08.2025 12:35

4. Failure to dispatch the materials in the time as per the delivery mentioned in our Purchase Order (PO) would make the supplier liable to an un-conditional LD at the rate of 0.5% of the undelivered order value per week of the delay or part thereof subject to a maximum of 10% of the undelivered order value.
5. Indigenous: In case of Ex-works delivery terms, the document date (Invoice/Challan date) in Goods Receipt (GR) document shall be reckoned for LD deduction. In case of FOR Delivery terms, Vehicle entry date at BHEL Units / Sites / other delivery destinations as mentioned on Lorry Receipt (LR) copy shall be taken as basis for LD calculations.
6. Import: For CFR terms, BL date will be considered for LD calculation.

BHEL reserves the right to receive or not receive the material after the due date of PO. Applicable GST shall also be recovered from suppliers/contractors on LD amount. For this Debit note will be issued by BHEL indicating the respective supply invoice number.

## 19. Liability Under Reverse Charge (RCM)

Any GST liability arising on BHEL under Reverse Charge (RCM) before actual receipt of goods and/ or Invoice thereof would be subject to recovery of Interest leviable for the period between the date of such liability and actual date of eligibility of ITC based on receipt of goods, receipt of Invoices and other conditions specified in GST Law as applicable.

## 20. Preference to Make in India

This procurement shall be governed by notification no. P-45021/2/2017-PP (BE-II) dated 16.09.2020 of Government of India issued by DPIIT and subsequent circulars issued afterwards. Accordingly, the minimum local content, the margin of purchase preference and the procedure for purchase preference to make in India shall be adhered.

## 21. Resolution of Disputes

The Parties agree that if at any time (whether before, during or after the arbitral or judicial proceedings), any Disputes (which term shall mean and include any dispute, difference, question or disagreement arising in connection with construction, meaning, operation, effect, interpretation or breach of the contract/tender which the Parties are unable to settle mutually), arise inter-se the Parties, the same may, be referred by either party to Conciliation to be conducted through Independent Experts Committee to be appointed by competent authority of BHEL from the BHEL Panel of Conciliators.

Notes:

1. No serving or a retired employee of BHEL/Administrative Ministry of BHEL shall be included in the BHEL Panel of Conciliators.
2. Any other person(s) can be appointed as Conciliator(s) who is/are mutually agreeable to both the parties from outside the BHEL Panel of Conciliators.

The proceedings of Conciliation shall broadly be governed by Part-III of the Arbitration and Conciliation Act 1996 or any statutory modification thereof and as provided in Annexure-X to this GCC.

Signature Not Verified
AMAN SHARMA
22.08.2025 12:35

The Annexure-X together with its appendices will be treated as if the same is part and parcel hereof and shall be as effectual as if set out herein in this GCC.

Except as provided elsewhere in this Contract, in case amicable settlement is not reached between the parties, in respect of any dispute or difference; arising out of the formation, breach, termination, validity or execution of the Contract; or, the respective rights and liabilities of the Parties; or, in relation to interpretation of any provision of the Contract; or, in any manner touching upon the Contract, then, either Party may, by a notice in writing to other Party, refer such dispute or difference to sole arbitration of an arbitrator appointed as per the Arbitration and Conciliation Act, 1996 (India) or statutory modification or re-enactment thereof and the rules made thereunder and for the time being in force.

The Arbitrator shall pass a reasoned award and the award of the Arbitrator shall be final and binding upon the parties.

This contract shall be governed, construed and interpreted in accordance with the laws of India.

Subject as aforesaid, the provisions of Arbitration & Conciliation Act 1996 (India) or statutory modification or re-enactment thereof and the rules made thereunder and for the time being in force shall apply to the arbitration proceeding under this clause.

The seat of arbitration shall be Tarn Taran, Punjab, India.

The cost of arbitration shall be borne as per the award of the Arbitrator.

Subject to arbitration in terms of clause above, the Courts at Tarn Taran, Punjab, India shall have exclusive jurisdiction over any matter arising out of or in connection with this Contract.

Notwithstanding the existence or any dispute or difference and/or reference for the arbitration, the vendor/contractor shall proceed with and continue without hindrance the performance of its obligation under this Contract with due diligence and expedition in a professional manner except where the Contract has been terminated by either Party in terms of this Contract.

**In Case of Contract with Public Sector Enterprise (PSE) or a Government Department, the following shall be applicable:**

In the event of any dispute or difference relating to the interpretation and application of the provisions of commercial contract(s) between Central Public Sector Enterprises (CPSEs)/Port Trusts inter se and also between CPSEs and Government Departments/Organizations (Excluding disputes concerning Railways, Income Tax, Customs & Excise Departments, such dispute or difference shall be taken up by either party for its resolution through AMRCD as mentioned in DPE OM No.05/003/2019-FTS-10937 dated 14th December, 2022 and the decision of AMRCD on the said dispute will be binding on both the parties."

Signature Not Verified
AMAN SHARMA
22.08.2025 12:35

Set off : BHEL shall have the right to recover any money which in the sole opinion of BHEL is due from the supplier from any money due to the supplier under this Contract or any other contract or from the Security Deposit/BG furnished by the supplier under this Contract or any other contract.

## 22. Access to Manufacturing Premises

While Purchase Orders placed on the vendor are under execution, authorized representatives of BHEL shall be allowed free access to the manufacturing facilities for the purpose of inspection or monitoring the progress of purchase orders. This access will also be extended to representatives of BHEL's customers accompanying the authorized representative/s of BHEL (which shall be intimated in advance), if our contractual requirements with our customers call for the same.

## 23. Force Majeure

1. Notwithstanding the provisions contained in other clauses, the supplier shall not be liable for imposition of any such sanction so long the delay and/or failure of the supplier in fulfilling its obligations under the contract is the result of an event of Force Majeure. For purposes of this clause, Force Majeure means an event beyond the control of the supplier and not involving the supplier's fault or negligence and which is not foreseeable and not brought about at the instance of the party claiming to be affected by such event and which has caused the non – performance or delay in performance. Such events may include, but are not restricted to, wars or revolutions, hostility, acts of public enemy, civil commotion, sabotage, fires, floods, explosions, epidemics, quarantine restrictions, strikes excluding by its employees, lockouts excluding by its management, freight embargoes and Acts of GOD.

2. If a Force Majeure situation arises, the supplier shall promptly notify the Purchaser/Consignee in writing of such conditions and the cause thereof within twenty-one days of occurrence of such event. Unless otherwise directed by the Purchaser/Consignee in writing, the supplier shall continue to perform its obligations under the contract as far as reasonably practical, and shall seek all reasonable alternative means for performance not prevented by the Force Majeure event.
3. If the performance in whole or in part or any obligation under this contract is prevented or delayed by any reason of Force Majeure for a period exceeding sixty days, either party may at its option terminate the contract without any financial repercussion on either side.

4. In case due to a Force Majeure event the Purchaser/Consignee is unable to fulfil its contractual commitment and responsibility, the Purchaser/Consignee will notify the supplier accordingly and subsequent actions taken on similar lines described in above sub-paragraphs.

## 24. Non-Disclosure Agreement

All Drawing and technical documents relating to the product or it's manufacture submitted by one party to the other, prior or subsequent to the formation of contract, shall remain property of the submitting party. Drawing, technical documents or other technical information received by one party, shall not without the consent of the other party, be used for any other purpose than that, for which they were provided. Such technical information shall not without the consent of the submitting party, otherwise be used or copied, reproduced, transmitted or communicated to a third party. Patterns supplied by BHEL will remain BHEL's property which shall be returned by the bidder on demand to BHEL. Bidder shall in no way share or use such intellectual property of BHEL to promote his own business with others.

Signature Not Verified
AMAN SHARMA
22.08.2025 12:35

***BHEL reserves the right to claim damages from the bidder, or take appropriate penal action as deemed fit against the bidder, for any infringement of the provisions contained herein.***

## 25. Preventive Checks to Eliminate Suspected Cartel Formation

The Bidder declares that they will not enter into any illegal or undisclosed agreement or understanding, whether formal or informal with other Bidder(s). This applies in particular to prices, specifications, certifications, subsidiary contracts, submission or non-submission of bids or any other actions to restrict competitiveness or to introduce cartelization in the bidding process.

In case, the Bidder is found having indulged in above activities, suitable action shall be taken by BHEL as per extant policies/ guidelines.

## 26. Fraud Prevention Policy

The Bidder along with its associate / collaborators / sub-contractors / sub-vendors / consultants / service providers shall strictly adhere to BHEL Fraud Prevention Policy displayed on BHEL website https://www.bhel.com/ and shall immediately bring to the notice of BHEL management about any fraud or suspected fraud as soon as it comes to their notice.

## 27. Suspension of Business Dealings with Suppliers / Contractors

The offers of the bidders who are under suspension and also the offers of the bidders, who engage the services of the firms debarred across BHEL, shall be rejected. The list of firms debarred across BHEL is available on BHEL web site https://www.bhel.com/.

INTEGRITY COMMITMENT, PERFORMANCE OF THE CONTRACT AND PUNITIVE ACTION THEREOF:

27.1. Commitment by BHEL:

BHEL commits to take all measures necessary to prevent corruption in connection with the tender process and execution of the contract. BHEL will during the tender process treat all Bidder(s) in a transparent and fair manner, and with equity.

27.2. Commitment by Bidder/ Supplier/ Contractor:

27.2.1. The bidder/ supplier/ contractor commits to take all measures to prevent corruption and will not directly or indirectly influence any decision or benefit which he is not legally entitled to nor will act or omit in any manner which tantamount to an offence punishable under any provision of the Indian Penal Code, 1860 or any other law in force in India.

27.2.2. The bidder/ supplier/ contractor will, when presenting his bid, disclose any and all payments he has made, and is committed to or intends to make to agents, brokers or any other intermediaries in connection with the award of the contract and shall adhere to relevant guidelines issued from time to time by Govt. of India/ BHEL.

Signature Not Verified
AMAN SHARMA
22.08.2025 12:35

27.2.3. The bidder/ supplier/ contractor will perform/ execute the contract as per the contract terms & conditions and will not default without any reasonable cause, which causes loss of business/ money/ reputation, to BHEL.

If any bidder/ supplier/ contractor during pre-tendering/ tendering/ post tendering/ award/ execution/ post-execution stage indulges in mal-practices, cheating, bribery, fraud or and other misconduct or formation of cartel so as to influence the bidding process or influence the price or acts or omits in any manner which tantamount to an offence punishable under any provision of the Indian Penal Code, 1860 or any other law in force in India, then, action may be taken against such bidder/ supplier/ contractor as per extant guidelines of the company available on https://www.bhel.com/ and/or under applicable legal provisions.

## 28. Discrepancy in Words and Figures

1. If, in the price structure quoted for the required goods/ services/ works, there is discrepancy between the unit price and the total price (which is obtained by multiplying the unit price by the quantity}, the unit price shall prevail and the total price corrected accordingly, unless in the opinion of the purchaser there is an obvious misplacement of the decimal point in the unit price, in which case the total price as quoted shall govern and the unit price corrected accordingly.
2. If there is an error in a total corresponding to the addition or subtraction of subtotals, the subtotals shall prevail and the total shall be corrected; and
3. If there is a discrepancy between words and figures, the amount in words shall prevail, unless the amount expressed in words is related to an arithmetic error, in which case the amount in figures shall prevail subject of (a) and (b) above.
4. If there is such discrepancy in an offer, the same shall be conveyed to the bidder with target date upto which the bidder has to send his acceptance on the above lines and if the bidder does not agree to the decision of the purchaser, the bid is liable to be ignored.
5. Bids should be free from correction, overwriting, using corrective fluid, etc. Any interlineation, cutting, erasure or overwriting shall be valid only if they are attested under full signature(s) of person(s) signing the bid else shall be liable for rejection.
6. All overwriting/cutting, etc will be numbered by bid opening officials and announced during bid opening.

## 29. LOI (Letter of Intent)

BHEL may issue LOI prior to the PO for any reason whatsoever. The LOI in such cases is to be treated as PO for all practical purposes and all the Terms & Conditions of the tender shall be applicable from the date of issue of LOI.

## 30. Sub-Contract

The purchase order or any part thereof shall not be sub-contracted, assigned or otherwise transferred without previously obtaining the BHEL's consent in writing.

Signature Not Verified
AMAN SHARMA
22.08.2025 12:35

## 31. Clarifications

The correspondence exchanged against the tender from both tenderer and BHEL through email/e-procurement are considered as valid document legally though it is not signed. It is treated as valid confirmations made on behalf of the respective company and very much comes under the legal ambit of the business transaction and hence it is binding on both the parties to the business. Any transaction pertaining to the tender from both the parties of business done round the clock irrespective of the office or business hours of the companies, are valid legally and binding on both the parties. This applies to the extent only in such cases where deadline time for transaction is not specifically declared by either or both the parties to the business.

## 32. Restrictions Under Rule 144(XI) of The General Financial Rules (GFR), 2017

Restrictions on procurement from a bidder of a country which shares a land border with India

I. a) Any bidder from a country which shares a land border with India will be eligible to bid in this tender, whether of goods or services (including consultancy services and non-consultancy services), only if the bidder is registered with the Competent Authority.

   b) Further, any bidder (including an Indian bidder) who has a Specified Transfer of Technology (ToT) arrangement with an entity from a country which shares a land border with India will be eligible to bid in any procurement whether of goods or services (including consultancy services and non-consultancy services) only if the bidder is registered with the Competent Authority. *This clause shall be applicable only in the tenders which attract restrictions due to specified ToT.*

II. "Bidder" (Seller / Service Provider) means any person or firm or company, including any member of a consortium or joint venture (that is an association of several persons, or firms or companies), every artificial juridical person not falling in any of the descriptions of bidders stated hereinbefore, including any agency branch or office controlled by such person, participating in a procurement process.

III. "Bidder (or entity) from a country which shares a land border with India" for the purpose of the Order means:
   a) An entity incorporated, established, or registered in such a country; or
   b) A subsidiary of an entity incorporated, established, or registered in such a country; or
   c) An entity substantially controlled through entities incorporated, established, or registered in such a country; or
   d) An entity whose beneficial owner is situated in such a country; or
   e) An Indian (or other) agent of such an entity; or
   f) A natural person who is a citizen of such a country; or
   g) A consortium or joint venture where any member of the consortium or joint venture falls under any of the above

IV. The beneficial owner for the purpose of (iv) above will be as under
   1. In case of a company or Limited Liability Partnership, the beneficial owner is the natural person(s), who, whether acting alone or together, or through one or more juridical person, has a controlling ownership interest or who exercises control through other means.
      Explanation—

Signature Not Verified
AMAN SHARMA
22.08.2025 12:35

a) "Controlling ownership interest" means ownership of or entitlement to more than twenty-five per cent. of shares or capital or profits of the company;
b) "Control" shall include the right to appoint majority of the directors or to control the management or policy decisions including by virtue of their shareholding or management rights or shareholders agreements or voting agreements;

2. In case of a partnership firm, the beneficial owner is the natural person(s) who, whether acting alone or together, or through one or more juridical person, has ownership of entitlement to more than fifteen percent of capital or profits of the partnership;
3. In case of an unincorporated association or body of individuals, the beneficial owner is the natural person(s), who, whether acting alone or together, or through one or more juridical person, has ownership of or entitlement to more than fifteen percent of the property or capital or profits of such association or body of individuals;
4. Where no natural person is identified under (1) or (2) or (3) above, the beneficial owner is the relevant natural person who holds the position of senior managing official;
5. In case of a trust, the identification of beneficial owner(s) shall include identification of the author of the trust, the trustee, the beneficiaries with fifteen percent or more interest in the trust and any other natural person exercising ultimate effective control over the trust through a chain of control or ownership.

V. An Agent is a person employed to do any act for another, or to represent another in dealings with third person.
VI. The registration shall be valid at the time of submission of bid and at the time of acceptance of bid.
VII. If the bidder was validly registered at the time of acceptance / placement of order, registration shall not be a relevant consideration during contract execution.
VIII. "Transfer of Technology" means dissemination and transfer of all forms of commercially usable knowledge such as transfer of know-how, skills, technical expertise, designs, processes and procedures, trade secrets, which enables the acquirer of such technology to perform activities using the transferred technology independently.

Any false declaration and non-compliance of the above would be a ground for debarment and further legal action in accordance with law.

**Bidder has to submit a certificate certifying following along with offer:**

"I have read the clause regarding restrictions on procurement from a bidder of a country which shares a land border with India; I certify that this bidder is not from such a country or, if from such a country, has been registered with the Competent Authority. I hereby certify that this bidder fulfils all requirements in this regard and is eligible to be considered. [*Where applicable, evidence of valid registration by the Competent Authority shall be Attached*]."

## 33. General

1. BHEL will not be bound by any power of attorney granted by the vendors or by changes in the composition of the firm made subsequent to the execution of the contract. They may, however, recognize such power of attorney and changes after obtaining proper legal advice, the cost of which will be chargeable to the vendor concerned.

Signature Not Verified
AMAN SHARMA
22.08.2025 12:35

2. BHEL reserves the right to extend the due date of opening, which shall be informed. Validity of offer shall be deemed to be revised accordingly.
3. BHEL reserves the right to accept or reject any part or whole of the tender of a bidder by assigning a valid reason thereof. BHEL reserves the right to cancel the tender without assigning any reason thereof and without any obligation before any commitment.
4. Acceptance of all terms and conditions, in the form of signed copy of T&C or confirmation separately written, shall be submitted along with quotation. If nothing is mentioned, it shall be concluded that these terms and conditions are acceptable.
5. BHEL may increase/decrease item/s based on BHEL requirement before price bid opening. Suitable price implication may be asked from suppliers.
6. BHEL may drop item/items from tender at any stage of tender before placing PO. BHEL may also delete PO with consent with supplier within delivery date of PO.
7. After releasing PO, it is assumed that supplier has accepted PO if we do not receive acknowledgement from supplier within 5 days of date of PO.
8. In case of unscheduled holiday on opening day of tender, the next working day will be treated as scheduled prescribed day of opening of tender.
9. On the due date of tender opening, only technical bids will be opened. The opened technical bids will be evaluated by us and clarifications required, if any, will be called for from the bidders on technical and commercial points. If no reply is received from the vendor for the clarification raised by BHEL with in the final cut-off date, those vendors offer will be processed with the documents available / submitted against this tender. Offers not meeting the required specification and technical condition will be summarily rejected. The price bids of technically suitable bidders will be opened on a later date with prior intimation to techno-commercially suitable bidders.
10. Ranking L-1, L-2 etc. shall be done for individual item for the techno-commercially acceptable offers on landed cost to BHEL, IVP Goindwal basis and BHEL reserves the right to place order for individual items with different vendors.
11. BHEL reserves the right to negotiate with L1 vendor or re-float the tender for items where, L1 price is not the lowest acceptable price; BHEL reserves the right to increase or decrease the tender quantity.
12. If supplier is mentioning delivery destination within state/ outside state depending upon his location of factory, Free on Road etc. these are assumed as on FOR Goindwal. If supplier is wishing to give delivery on Ex works basis, then he has to clearly mention about it.
13. The bidder has to keep track of any changes by viewing the addendum(s) / Corrigendum(s) issued by the Purchaser on time-to- time basis in the E-Procurement platform. The Company calling for tenders shall not be responsible for any claims/problems arising out of this.
14. Unregistered suppliers, who are techno-commercially qualified against the open tender, are requested to register with BHEL as permanent supplier by submitting the Supplier Registration Form (SRF) in online supplier registration portal (https://supplier.bhel.in/).
15. The General Conditions of Contract and the Special Conditions in each enquiry and the resulting purchase order constitute the entire contract between the parties. In case of any discrepancy between the provisions of General Conditions of Contract and Special Conditions of the Tender, the provisions in Special Conditions of the Tender shall prevail and interpretation of BHEL of such condition/clause will be final and binding on both the parties.

Signature Not Verified
AMAN SHARMA
22.08.2025 12:35

## 34. Treatment in Case of Dealer Acceptance

Whether dealers/agents in tender are acceptable that will be mentioned in tender special terms. In case of acceptance of dealers/agents in tender, below criteria is applicable.

**For manufacturers**

In case manufacturer insists on engaging a dealer / agent / reseller, such dealer / agent / reseller is not allowed to represent more than one manufacturer for same item. In case more than one dealers/agent of a company quote for same item, then bid of both dealers/agents shall be considered. In case OEM has authorized a particular dealer specific to any tender, then bid of any other dealer of same OEM shall be rejected.

**For dealer / agent / reseller:**

In case of dealers / agents / reseller, valid authorized dealer certificate is required from original manufacturer (OEM). In case bids are received from dealer / agent and manufacturer both, bid submitted by dealer will be rejected. A dealer representing more than one manufacturer for same item will be rejected. Kindly quote for single make only. Dealer has to provide contact details (like name, e-mail id, telephone no & address) of OEM office issuing "Dealer Authorization Certificate".

## 35. Enclosure

Annexure-1: Declaration regarding Insolvency/ Liquidation/ Bankruptcy Proceedings
Annexure-2: Declaration reg. minimum local content in line with revised public procurement
Annexure-3: Proforma of Bank Guarantee for Performance Security.
Annexure-4: List of Consortium Bank.
Annexure-X: Brief Procedure for Conduct of Conciliation Proceedings
Appendix-I of Annexure-X
Appendix-II of Annexure-X
Appendix-III of Annexure-X

Signature Not Verified
AMAN SHARMA
22.08.2025 12:35

**Annexure-1**

(To be Typed & submitted in the Letter Head of the Company/Firm of Bidder)

---

To
Bharat Heavy Electrical Limited
Industrial Valves Plant
Goindwal
Punjab-143422

Dear Sir,

Subject: DECLARATION REGARDING INSOLVENCY/ LIQUIDATION/ BANKRUPTCY PROCEEDINGS

Ref: 1) Tender Enquiry No.

I/We, _____ declare that, I/We am/are not admitted under insolvency resolution process or liquidation under Insolvency and Bankruptcy Code, 2016, as amended from time to time or under any other law as on date, by NCLT or any adjudicating authority/authorities.

Yours faithfully,

(Signature, date & seal of authorized representative of the bidder)

Date:
Place:

Signature Not Verified
AMAN SHARMA
22.08.2025 12:35

**Annexure-2**

DECLARATION REGARDING MINIMUM LOCAL CONTENT IN LINE WITH REVISED PUBLIC PROCUREMENT (PREFERENCE TO MAKE IN INDIA), ORDER 2017 DATED 04TH JUNE, 2020 AND SUBSEQUENT ORDER(S)
(To be Typed & submitted in the Letter Head of the Company/Firm of Bidder)

---

To
Bharat Heavy Electrical Limited
Industrial Valves Plant
Goindwal
Punjab-143422

Dear Sir,
Sub: Declaration reg. minimum local content in line with Public Procurement (Preference to Make in India), Order 2017-Revision, dated 04th June, 2020 and subsequent order(s).

Ref: 1) Tender Enquiry No.

We hereby certify that the items/works/services offered by M/s_____ (Name of of bidder) has a local content of ___% and this meets the local content requirement for **Class-1 Local supplier/ Class-2 Local supplier** ** as defined in Public Procurement (Preference to Make in India), Order 2017-Revision dated 04.06.2020 issued by DPIIT and subsequent order(s).

The details of the location(s) at which the local value addition is made are as follows:

1. _____ 2. _____

3. _____ 4. _____

...

Thanking you,
Yours faithfully,

(Signature, Date & seal of Authorized Signatory of the Bidder)

** - Strike out whichever is not applicable.

Signature Not Verified
AMAN SHARMA
22.08.2025 12:35

Note:

1. Bidders to note that above format, duly filled & signed by authorized signatory, shall be submitted along with the techno-commercial offer.
2. In case the bidders quoted value is in excess of Rs 10 Crores , the authorized signatory of this declaration shall necessarily be the statutory auditor or cost auditor of the company (in the case of companies) or a practicing cost accountant or practicing chartered accountant (in respect of suppliers other than companies).
3. In the event of false declaration, actions as per the above order and as per BHEL Guidelines shall be initiated against the bidder

Signature Not Verified
AMAN SHARMA
22.08.2025 12:35

**Annexure-3**

BANK GUARANTEE FOR PERFORMANCE SECURITY (On non-Judicial paper of appropriate value)

Bank Guarantee No.
Date.

To
Bharat Heavy Electrical Limited
Industrial Valves Plant
Goindwal
Punjab-143422

Dear Sirs,

In consideration of Bharat Heavy Electricals Limited (hereinafter referred to as the 'Employer' which expression shall unless repugnant to the context or meaning thereof, include its successors and permitted assigns) incorporated under the Companies Act, 1956 and having its registered office BHEL House, Siri Fort New Delhi through its Unit at BHEL, IVP, Goindwal having awarded to…… (Name of the Vendor / Contractor / Supplier) with its registered office at…… hereinafter referred to as the ' Vendor / Contractor / Supplier ', which expression shall unless repugnant to the context or meaning thereof, include its successors and permitted assigns), a contract Ref No……. valued at Rs. ……. (Rupees …….) and the Vendor / Contractor / Supplier having agreed to provide a contract performance bank guarantee, equivalent to … % (… percent) of the said value of the contract to the employer for the faithful performance of the Contract.

We, ……, (here in after referred to as the Bank), having registered/Head office at ……and inter alia a branch at ……being the Guarantor under this Guarantee, hereby irrevocably and unconditionally undertake to forthwith and Immediate pay to the Employer any sum or sums upto a maximum amount of Rs …… (Rupees in words …….) without any demur, immediately on first demand from the Employer and without any reservation, protest, and recourse and without the Employer needing to prove or demonstrate reasons for its such demand.

Any such demand made on the Bank shall be conclusive as regards the amount due and payable by the Bank under this guarantee. However, our liability under this guarantee shall be restricted to an amount not exceeding Rs……

Signature Not Verified
AMAN SHARMA
22.08.2025 12:35

We undertake to pay to the Employer any money so demanded notwithstanding any dispute or disputes raised by the Vendor / Contractor / Supplier in any suit or proceeding pending before any Court or Tribunal, Arbitrator or any other authority, our liability under this present being absolute and unequivocal.

The payment so made by us under this Guarantee shall be a valid discharge of our liability for payment thereunder and the Vendor / Contractor / Supplier shall have no claim against us for making such payment.

We the……Bank further agree that the guarantee herein contained shall remain in full force and effect during the period that would be taken for the performance of the said Contract/ satisfactory completion of the performance guarantee period as per the terms of the Contract and that it shall continue to be enforceable till all the dues of the employer under or by virtue of the said Contract have been fully paid and its claims satisfied or discharged.

We……Bank further agree that the Employer shall have the fullest liberty without our consent and without affecting in any manner our obligations hereunder to vary any of the terms and conditions of the said Contract or to extend time of performance by the said Vendor /Contractor / Supplier from time to time or to postpone for any time or from time to time any of the powers exercisable by the Employer against the said Vendor / Contractor / Supplier and to forbear or enforce any of the terms and conditions relating to the said Contract and we shall not be relieved from our liability by reason of any such variation, or extension being granted to the said Vendor / Contractor / Supplier or for any forbearance, act or omission on the part of the Employer or any indulgence by the Employer to the said Vendor / Contractor / Supplier or by any such matter or thing whatsoever which under the law relating to sureties would but for this provision have effect of so relieving us.

The Bank also agrees that the Employer at its option shall be entitled to enforce this Guarantee against the Bank as a principal debtor, in the first instance without proceeding against the Vendor / Contractor/ Supplier and notwithstanding any security or other guarantee that the Employer may have in relation to the Vendor /Contractor / Supplier ’s liabilities.

This Performance Bank Guarantee shall remain in force upto……. and including and and shall be extended from time to time for such period as may be desired by Employer.

This Guarantee shall not be determined or affected by liquidation or winding up, dissolution or change of constitution or insolvency of the Vendor / Contractor / Supplier but shall in all respects and for all purposes be binding and operative until payment of all money payable to the Employer in terms thereof.

Signature Not Verified
AMAN SHARMA
22.08.2025 12:35

Unless a demand or claim under this guarantee is made on us in writing on or before the……we shall be discharged from all liabilities under this guarantee thereafter.

This Bank Guarantee shall be governed, construed and interpreted in accordance with the laws of India.

Courts at …… shall alone have exclusive jurisdiction over any matter arising out of or in connection with this bank guarantee.

We …… Bank lastly undertake not to revoke this guarantee during its currency except with the previous consent of the Employer in writing.

Notwithstanding anything to the contrary contained hereinabove:

a) The liability of the Bank under this guarantee shall not exceed-----
b) This Guarantee shall be valid up to -----
c) Unless the Bank is served a written claim or demand on or before……. all rights under this guarantee shall be forfeited and the Bank shall be relieved and discharged from all liabilities under this guarantee irrespective of whether or not the original bank guarantee is returned to the Bank.

We, ……. Bank have power to issue this Guarantee under law and the undersigned as a duly authorized person has full powers to sign this Guarantee on behalf of the Bank.

For and on behalf of
(Name of the Bank)

Date:
Place of Issue:

Notes:
1. The BG should be on Non-Judicial Stamp paper/e-stamp paper of appropriate value as per Stamp
Act prevailing in the State(s) where the BG is submitted or is to be acted upon or the rate prevailing in the State where the BG was executed, whichever is higher. The Stamp Paper/estamp paper shall be purchased in the name of Contractor/sub-contractor /vendor/ Bank issuing the guarantee.

Signature Not Verified
AMAN SHARMA
22.08.2025 12:35

**Annexure-4**

## LIST OF CONSORTIUM BANKS

| Sl. No. | NAME OF THE BANK |
|---|---|
| 1 | State Bank of India |
| 2 | Canara Bank |
| 3 | IDBI Bank Limited |
| 4 | ICICI Bank Limited |
| 5 | HDFC Bank Limited |
| 6 | Axis Bank |
| 7 | IndusInd Bank Limited |
| 8 | Bank of Baroda |
| 9 | Exim Bank |
| 10 | Indian Bank |
| 11 | Punjab National Bank |
| 12 | Union Bank of India |
| 13 | Yes Bank Limited |
| 14 | RBL Bank Ltd. |
| 15 | Standard Chartered Bank |
| 16 | Indian Overseas Bank |
| 17 | Kotak Mahindra Bank Limited |
| 18 | Federal Bank Limited |
| 19 | Hongkong and Shanghai Banking Corporation Ltd |

Signature Not Verified
AMAN SHARMA
22.08.2025 12:35

**Annexure-X**

**BRIEF PROCEDURE FOR CONDUCT OF CONCILIATION PROCEEDINGS**

1. The proceedings of Conciliation shall broadly be governed by Part-III of the Arbitration and Conciliation Act 1996 or any statutory modification thereof and as provided herein:

2. The party desirous of resorting to Conciliation shall send an invitation/notice in writing to the other party to conciliate specifying all points of Disputes with details of the amount claimed. The party concerned shall not raise any new issue thereafter. Parties shall also not claim any interest on claims/counter-claims from the date of notice invoking Conciliation till the conclusion of the Conciliation proceedings.

3. The party receiving the invitation/notice for Conciliation shall within 30 days of receipt of the notice of Conciliation intimate its consent for Conciliation along with its counter-claims, if any.

4. The Conciliation in a matter involving claim or counter-claim (whichever is higher) up to Rs 5 crores shall be carried out by sole Conciliator nominated by BHEL while in a matter involving claim or counter-claim (whichever is higher) of more than Rs 5 crores Conciliation shall be carried out by 3 Conciliators nominated by BHEL.

5. The Parties shall be represented by only their duly authorized in-house executives/officers and neither Party shall be represented by a Lawyer.

6. The first meeting of the IEC shall be convened by the IEC by sending appropriate communication/notice to both the parties as soon as possible but not later than 30 days from the date of his/their appointment. The hearings in the Conciliation proceeding shall ordinarily be concluded within two (2) months and, in exceptional cases where parties have expressed willingness to settle the matter or there exists possibility of settlement in the matter, the proceedings may be extended by the IEC by a maximum of further 2 months with the consent of the Parties subject to cogent reasons being recorded in writing.

7. The IEC shall thereafter formulate recommendations for settlement of the Disputes supported by reasons at the earliest but in any case, within 15 days from the date of conclusion of the last hearing. The recommendations so formulated along with the reasons shall be furnished by the IEC to both the Parties at the earliest but in any case, within 1 month from the date of conclusion of the last hearing.

8. Response/modifications/suggestions of the Parties on the recommendations of the IEC are to be submitted to the IEC within time limit stipulated by the IEC but not more than 15 days from the date of receipt of the recommendations from the IEC.

Signature Not Verified
AMAN SHARMA
22.08.2025 12:35

9. In the event, upon consideration, further review of the recommendations is considered necessary, whether by BHEL or by the other Party, then, the matter can be remitted back to the IEC with request to reconsider the same in light of the issues projected by either/both the Parties and to submit its recommendations thereon within the following 15 days from the date of remitting of the case by either of the Parties.

10. Upon the recommendations by the Parties, with or without modifications, as considered necessary, the IEC shall be called upon to draw up the Draft Settlement Agreement in terms of the recommendations.

11. When a consensus can be arrived at between the parties only in regard to any one or some of the issues referred for Conciliation the draft Settlement Agreement shall be accordingly formulated in regard to the said Issue(s), and the said Settlement Agreement, if signed, by the parties, shall be valid only for the said issues. As regards the balance issues not settled, the parties may seek to resolve them further as per terms and conditions provided in the contract.

12. In case no settlement can be reached between the parties, the IEC shall by a written declaration, pronounce that the Conciliation between the parties has failed and is accordingly terminated.

13. Unless the Conciliation proceedings are terminated in terms of para 22 (b), (c) & (d) herein below, the IEC shall forward his/its recommendations as to possible terms of settlement within one (1) month from the date of last hearing. The date of first hearing of Conciliation shall be the starting date for calculating the period of 2 months.

14. In case of 3 members IEC, 2 members of IEC present will constitute a valid quorum for IEC and meeting can take place to proceed in the matter after seeking consent from the member who is not available. If necessary, videoconferencing may be arranged for facilitating participation of the members. However, the IEC recommendations will be signed by all members. Where there is more than one (1) Conciliator, as a general rule they shall act jointly. In the event of differences between the Members of IEC, the decision/recommendations of the majority of the Members of IEC shall prevail and be construed as the recommendation of the IEC.

15. The Draft Settlement Agreement prepared by the IEC in terms of the consensus arrived at during the Conciliation proceedings between the Parties shall be given by the IEC to both the parties for putting up for approval of their respective Competent Authority.

16. Before submitting the draft settlement agreement to BHEL's Competent Authority viz. the Board Level Committee on Alternative Dispute Resolution (BLCADR) for approval, concurrence of the other party's Competent Authority to the draft settlement agreement shall be obtained by the other party and informed to BHEL within 15 days of receipt of the final draft settlement agreement by it. Upon approval by the Competent Authority, the Settlement Agreement would thereafter be signed by the authorized representatives of both the Parties and authenticated by the members of the IEC.

Signature Not Verified
AMAN SHARMA
22.08.2025 12:35

17. In case the Draft Settlement Agreement is rejected by the Competent Authority of BHEL or the other Party, the Conciliation proceedings would stand terminated.

18. A Settlement Agreement shall contain a statement to the effect that each of the person(s) signing thereto (i) is fully authorized by the respective Party(ies) he/she represents, (ii) has fully understood the contents of the same and (iii) is signing on the same out of complete freewill and consent, without any pressure, undue influence.

19. The Settlement Agreement shall thereafter have the same legal status and effect as an arbitration award on agreed terms on the substance of the dispute rendered by an arbitral tribunal passed under section 30 of the Arbitration and Conciliation Act, 1996.

20. Acceptance of the Draft Settlement Agreement/recommendations of the Conciliator and/or signing of the Settlement Agreement by BHEL shall however, be subject to withdrawal/closure of any arbitral and/or judicial proceedings initiated by the concerned Party in regard to such settled issues.

21. Unless otherwise provided for in the agreement, contract or the Memorandum of Understanding, as the case may be, in the event of likelihood of prolonged absence of the Conciliator or any member of IEC, for any reason/incapacity, the Competent Authority/Head of Unit/Division/Region/Business Group of BHEL may substitute the Conciliator or such member at any stage of the proceedings. Upon appointment of the substitute Conciliator(s), such reconstituted IEC may, with the consent of the Parties, proceed with further Conciliation into the matter either de-novo or from the stage already reached by the previous IEC before the substitution.

22. The proceedings of Conciliation under this Scheme may be terminated as follows:
    a. On the date of signing of the Settlement agreement by the Parties; or,
    b. By a written declaration of the IEC, after consultation with the parties, to the effect that further efforts at conciliation are no longer justified, on the date of the declaration; or,
    c. By a written declaration of the Parties addressed to the IEC to the effect that the Conciliation proceedings are terminated, on the date of the declaration; or,
    d. By a written declaration of a Party to the other Party and the IEC, if appointed, to the effect that the Conciliation proceedings are terminated, on the date of the declaration.
    e. On rejection of the Draft Settlement Agreement by the Competent Authority of BHEL or the other Party.

Signature Not Verified
AMAN SHARMA
22.08.2025 12:35

23. The Conciliator(s) shall be entitled to following fees and facilities:

| Sr. No. | Particulars | Amount |
|---|---|---|
| 1 | Sitting fees | Each Member shall be paid a Lump Sum fee of Rs 75,000/- for the whole case payable in terms of paragraph No. 27 herein below. |
| 2 | Towards drafting of settlement agreement | In cases involving claim and/or counter-claim of up to Rs 5crores.<br>Rs 50,000/- (Sole Conciliator)<br><br>In cases involving claim and/or counter-claim of exceeding Rs 5 crores but less than Rs 10 crores.<br>Rs. 75,000 (per Conciliator)<br>In cases involving claim and/or counter-claim of more than Rs 10 crores.<br>Rs 1,00,000/- (per Conciliator)<br>Note: The aforesaid fees for the drafting of the Settlement Agreement shall be paid on Signing of the Settlement Agreement after approval of the Competent Authority<br>or<br>Rejection of the proposed Settlement Agreement by the Competent Authority of BHEL. |
| 3 | Secretarial expenses | Rs 10,000/- (one time) for the whole case for Conciliation by a Sole Member IEC.<br><br>Where Conciliation is by multi member Conciliators –Rs 30,000/- (one time)- to be paid to the IEC |
| 4 | Travel and transportation and stay at outstation<br>i Retired Senior Officials of other Public Sector Undertakings (pay scale wise equivalent to or more than E-8 level of BHEL) | As per entitlement of the equivalent officer (pay scale wise) in BHEL. |
| | Others | As per the extant entitlement of whole time Functional Directors in BHEL. |

Signature Not Verified
AMAN SHARMA
22.08.2025 12:35

| | | |
|---|---|---|
| 5 | Venue for meeting | Unless otherwise agreed in the agreement, contract or the Memorandum of Understanding, as the case may be, the venue/seat of proceedings shall be the location of the concerned Unit / Division / Region / Business Group of BHEL. Without prejudice to the seat/venue of the Conciliation being at the location of concerned BHEL Unit / Division / Region / Business Group, the IEC after consulting the Parties may decide to hold the proceedings at any other place/venue to facilitate the proceedings. Unless, Parties agree to conduct Conciliation at BHEL premises, the venue is to be arranged by either Party alternately. |

24. The parties will bear their own costs including cost of presenting their cases/evidence/witness(es)/expert(s)on their behalf. The parties agree to rely upon documentary evidence in support of their claims and not to bring any oral evidence in IEC proceedings.

25. If any witness(es) or expert(s) is/are, with the consent of the parties, called upon to appear at the instance of the IEC in connection with the matter, then, the costs towards such witness(es)/expert(s) shall be determined by the IEC with the consent of the Parties and the cost so determined shall be borne equally by the Parties.

26. The other expenditures/costs in connection with the Conciliation proceedings as well as the IEC's fees and expenses shall be shared by the Parties equally.

27. Out of the lump sum fees of Rs 75,000/- for Sitting Fees, 50% shall be payable after the first meeting of the IEC and the remaining 50% of the Sitting Fees shall be payable only after termination of the conciliation proceedings in terms of para 22 hereinabove.

28. The travelling, transportation and stay at outstation shall be arranged by concerned Unit as per entitlements as per Serial No. 3 of the Table at para 23 above, and in case such arrangements are not made by the BHEL Unit, the same shall be reimbursed to the IEC on actuals limited to their entitlement as per Serial No. 4 of the Table at Para 23 above against supporting documents. The IEC Member(s) shall submit necessary invoice for claiming the fees/reimbursements.

29. The Parties shall keep confidential all matters relating to the conciliation proceedings. Confidentiality shall extend also to the settlement agreement, except where its disclosure is necessary for purposes of its implementation and enforcement or as required by or under a law or as per directions of a Court/Governmental authority/ regulatory body, as the case may be.

Signature Not Verified
AMAN SHARMA
22.08.2025 12:35

30. The Parties shall not rely upon or introduce as evidence in any further arbitral or judicial proceedings, whether or not such proceedings relate to the Disputes that is the subject of the Conciliation proceedings:
    a. Views expressed or suggestions made by the other party in respect of a possible settlement of the Disputes;
    b. admissions made by the other party in the course of the Conciliator proceedings;
    c. proposals made by the Conciliator;
    d. The fact that the other Party had indicated his willingness to accept a proposal for settlement made by the Conciliator.

31. The Parties shall not present the Conciliator(s) as witness in any Alternative Dispute Resolution or Judicial proceedings in respect of a Disputes that is/was the subject of that particular Conciliation proceeding.

32. None of the Conciliators shall act as an arbitrator or as a representative or counsel of a Party in any arbitral or judicial proceeding in respect of a Disputes that is/was the subject of that particular Conciliation proceeding.

33. The Parties shall not initiate, during the Conciliation proceedings, any arbitral or judicial proceedings in respect of a Disputes that is the subject matter of the Conciliation proceedings except that a Party may initiate arbitral or judicial proceedings where, in his opinion, such proceedings are necessary for preserving his rights including for preventing expiry of period of limitation. Unless terminated as per the provisions of this Scheme, the Conciliation proceedings shall continue notwithstanding the commencement of the arbitral or judicial proceedings and the arbitral or judicial proceedings shall be primarily for the purpose of preserving rights including preventing expiry of period of limitation.

34. The official language of Conciliation proceedings under this Scheme shall be English unless the Parties agree to some other language.

Signature Not Verified
AMAN SHARMA
22.08.2025 12:35

**Appendix-I of Annexure-X**

**FORMAT FOR SEEKING CONSENT FOR REFERRING THE DISPUTES TO CONCILIATION THROUGH IEC**

To,

M/s. (Stakeholder's name)

**Sub: Resolution of the Disputes through conciliation by Independent Expert Committee (IEC).**

Ref: Contract No/MoU/Agreement/LOI/LOA& date _____.

Sir,

With reference to above referred Contract/MoU/Agreement/LOI/LOA, you have raised certain Disputes/claims. Vide your letter dated____ you have requested BHEL to refer the Disputes/claims to IEC for Conciliation.

We are enclosing herewith Format (3) for giving consent and the terms and conditions of BHEL Conciliation Scheme, 2018 governing conciliation through IEC. You are requested to give your unconditional consent to the said terms and conditions of the Scheme by returning the same duly sealed and signed on each page. On receipt of your consent, matter will be put to the Competent Authority for consideration and decision.

Please note that BHEL has also certain claims against you (if applicable). BHEL reserves its right to agree or not to agree conciliation of the said disputes through BHEL and this letter is being issued without prejudice to BHEL's rights and contentions available under the contract and law.

Yours faithfully,

**Representative of BHEL**

Signature Not Verified
AMAN SHARMA
22.08.2025 12:35

**Appendix-II of Annexure-X**

**FORMAT FOR GIVING CONSENT BY CONTRACTOR/VENDOR/CUSTOMER/COLLABORATOR/CONSORTIUM PARTNERSFOR REFERRING THE DISPUTES TO CONCILIATION THROUGH IEC**

To,

BHEL

.....

**Sub: Resolution of Disputes through Conciliation by Independent Expert Committee (IEC).**

Ref: Contract/MoU/Agreement/LOI/LOA No & date____

With reference to above referred contract, our following bills/invoices/claims submitted to BHEL are still unpaid giving rise to Disputes:

| SL. no. | Claim Description | Bill submitted to BHEL (no. and date) | Amount of the bill/claim | Amount received from BHEL | Outstanding Amount |
|---|---|---|---|---|---|
| | | | | | |
| | | | | | |
| | | | | | |

Accordingly, we request you to kindly refer the Disputes in respect of above claims to IEC for Conciliation.

We hereby agree and give our unconditional consent to the terms and conditions of BHEL Conciliation Scheme, 2018 governing conciliation through IEC. We have signed the same on each page and enclosed it for your consideration.

Yours faithfully,

**(Signature with stamp)**

**Authorized Representative of Contractor**
**Name, with designation Date**

Signature Not Verified
AMAN SHARMA
22.08.2025 12:35

**Appendix-III of Annexure-X**

**STATEMENT OF CLAIMS/COUNTER CLAIMS TO BE SUBMITTED TO THE IEC BY BOTH THE PARTIES**

1. Chronology of the Disputes

2. Brief of the Contract/MoU/Agreement/LOI/LOA

3. Brief history of the Disputes:

4. Issues:

5. Details of Clam(s)/Counter Claim(s):

| SI. No. | Description of claim(s)/Counter Claim | Amount (in INR) Or currency applicable in the contract | Relevant contract clause |
|---|---|---|---|
| | | | |
| | | | |
| | | | |

6. Basis/Ground of claim(s)/counter claim(s) (along with relevant clause of contract)

**Note**– *The Statement of Claims/Counter Claims may ideally be restricted to maximum limit of 20 pages. Relevant documents may be compiled and submitted along with the statement of Claims/Counter Claims. The statement of Claims/Counter Claims is to be submitted to all IEC members and to the other party by post as well as by email.*

Signature Not Verified
AMAN SHARMA
22.08.2025 12:35

DRAWING NO. 2-V-0000-14336

ALL DIMENSIONS ARE IN MILLIMETRES. FOR TOLERANCES OF UNTOLERANCED DIMENSIONS DURING MANUFACTURE REFER RELEVANT QCP / QP

| SL.No. | DRAWING No. | MATL. CODE | $øD^{+2}_{0}$ | $L^{+4}_{0}$ | NET WT (Kg) | APPLICABLE VALVE SIZES |
|---|---|---|---|---|---|---|
| 01 | 2-V-N298-14336/2 | 96 465 276 0000 | 122 | 22 | 0.33 | 2-C150-GV |
| 02 | 2-V-F602-14336/2 | 96 465 277 0000 | 135 | 27 | 0.42 | 3-C600-GV |
| 03 | 2-V-2885-14336/2 | 96 465 278 0000 | 142 | 23 | 0.43 | 3-C300-RV |
| 04 | 2-V-N289-14336/2 | 96 465 279 0000 | 148 | 20 | 0.43 | 3-C150-FV,3-C150-GV |
| 05 | 2-V-N255-14336/2 | 96 465 280 0000 | 158 | 20 | 0.48 | 3-C300-GV |
| 06 | 2-V-F603-14336/2 | 96 465 281 0000 | 166 | 33 | 0.63 | 4-C600-GV |
| 07 | 2-V-5171-14336/2 | 96 465 282 0000 | 168 | 23 | 0.56 | 3-C300-FV |
| 08 | 2-V-N294-14336/2 | 96 465 283 0000 | 176 | 35 | 0.71 | 4-C150-GV |
| 09 | 2-V-2886-14336/2 | 96 465 284 0000 | 180 | 33 | 0.71 | 4-C300-RV |
| 10 | 2-V-5177-14336/2 | 96 465 285 0000 | 188 | 18 | 0.62 | 4-C150-FV |
| 11 | 2-V-N251-14336/2 | 96 465 286 0000 | 206 | 30 | 0.85 | 4-C300-GV |
| 12 | 2-V-F604-14336/2 | 96 465 287 0000 | 227 | 43 | 1.14 | 6-C600-GV |
| 13 | 2-V-N248-14336/2 | 96 465 288 0000 | 230 | 30 | 1.04 | 6-C150-GV,6-C300-GV |
| 14 | 2-V-5176-14336/2 | 96 465 289 0000 | 232 | 25 | 0.98 | 6-C150-FV |
| 15 | 2-V-2887-14336/2 | 96 465 290 0000 | 236 | 24 | 0.99 | 6-C300-RV |
| 16 | 2-V-5173-14336/2 | 96 465 291 0000 | 242 | 39 | 1.22 | 6-C300-FV |
| 17 | 2-V-N271-14336/2 | 96 465 292 0000 | 282 | 39 | 1.55 | 8-C150-GV |
| 18 | 2-V-N244-14336/2 | 96 465 293 0000 | 288 | 33 | 1.52 | 8-C300-FV,8-C300-GV,8-C600-GV |
| 19 | 2-V-5170-14336/2 | 96 465 294 0000 | 292 | 30 | 1.44 | 8-C150-FV |
| 20 | 2-V-2888-14336/2 | 96 465 295 0000 | 297 | 33 | 1.60 | 8-C300-RV |
| 21 | 2-V-N267-14336/2 | 96 465 296 0000 | 336 | 40 | 2.09 | 10-C150-GV |
| 22 | 2-V-F609-14336/2 | 96 465 297 0000 | 344 | 35 | 2.09 | 10-C600-GV |
| 23 | 2-V-N235-14336/2 | 96 465 298 0000 | 357 | 43 | 2.37 | 10-C300-FV,10-C300-GV |
| 24 | 2-V-Z018-14336/2 | 96 465 299 0000 | 386 | 63 | 3.08 | 12-C300-FV |
| 25 | 2-V-N903-14336/2 | 96 465 300 0000 | 416 | 45 | 3.10 | 12-C300-GV |
| 26 | 2-V-N631-14336/2 | 96 465 301 0000 | 432 | 58 | 3.59 | 12-C300-GV |
| 27 | 2-V-N593-14336/2 | 96 465 302 0000 | 460 | 50 | 3.79 | 14-C300-GV |
| 28 | 2-V-N594-14336/2 | 96 465 303 0000 | 492 | 47 | 4.18 | 16-C300-GV,16-C300-FV |
| 29 | 2-V-N575-14336/2 | 96 465 304 0000 | 540 | 80 | 5.79 | 18-C150-GV |
| 30 | 2-V-N822-14336/2 | 96 465 305 0000 | 593 | 58 | 6.10 | 20-C150-FV,20-C150-GV |
| 31 | 2-V-N595-14336/2 | 96 465 306 0000 | 648 | 60 | 7.10 | 20-C300-GV |
| 32 | 2-V-N805-14336/2 | 96 465 307 0000 | 698 | 58 | 8.08 | 24-C150-GV |

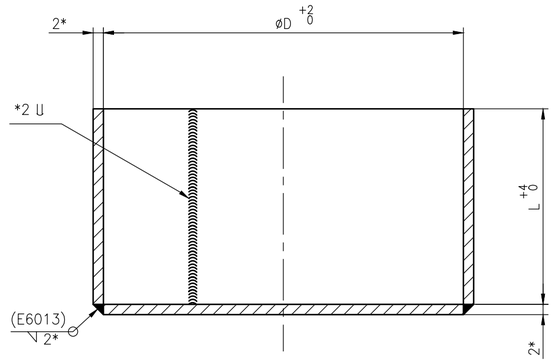


## NOTE:

1. MATERIAL SPECIFICATION: IS 1079 HR1
2. *SHEET THICKNESS 1.6 ALSO ACCEPTABLE.

| No OFF | DESCRIPTION | MATL CODE | MATL SPECN | HEAT TREATMENT | SCRAP SORT | NET WT (kg) | GROSS WT (kg) | DRAWING No | ITEM No |
|---|---|---|---|---|---|---|---|---|---|
| – | – | – | – | – | – | – | – | – | – |

TYPE OF PRODUCT
OR NAME OF
CUSTOMER/PROJECT

BHARAT HEAVY ELECTRICALS LTD.,
UNIT: HIGH PRESSURE BOILER PLANT.
TIRUCHIRAPALLI -620014.
365-120

| | NAME | SIGN | DATE | NO.OF VAR. |
|---|---|---|---|---|
| DRN | R.RAJKUMAR | | 08.06.99 | |
| CHD | R.L.NARAYANAN | | 08.06.99 | |
| APPD | M.RAJAKUMAR | | 08.06.99 | |

DEPT VL
CODE 320
SCALE NTS
WEIGHT (KG). REF. TABLE
REFERENCE INFORMATIONS
CAD REF: C214336
NO. OF ITEMS

TITLE
METALLIC END COVER
(FABRICATED)

CARD CODE U 01

DRAWING NO. 2-V-0000-14336

REV 02

| REV | DATE | ALTERED | |
|---|---|---|---|
| 02 | 16.07.15 | M.S.SELVAM | CHD & APPD MS & SSK |
| 01 | 16.03.13 | P.NALLATHAMBI | CHD & APPD S.S.K. & M.R.K |

MATERIAL IS 1079 HR1 WAS IS 1079 Gr. ST 34

DCP : 801963

ZONE

NOTE No.2 ADDED.

DCP: 801481

CAUTION: The information on this document is the property of BHARAT HEAVY ELECTRICALS LTD. It must not be used directly or indirectly in any way detrimental to the interest of the company.

Size A2

ALL DIMENSIONS ARE IN MILLIMETRES. FOR TOLERANCES OF UNTOLERANCED DIMENSIONS DURING MANUFACTURE REFER RELEVANT QCP / QP.

DRAWING NO: 3-V-0000-23461

| SL. NO. | DRAWING NO. | COMPONENT CODE | ØD +2 0 | L +4 0 | WT (kg) | VALVE SIZE |
|---|---|---|---|---|---|---|
| 01 | 3-V-N590-23461/2 | 964536440000 | 426 | 100 | 4.4 | 16"-150C |
| 02 | 3-V-N593-23461/2 | 964536450000 | 387 | 90 | 3.6 | 14"-300C |
| 03 | 3-V-N595-23461/2 | 964536460000 | 542 | 125 | 7.0 | 20"-300C |
| 04 | 3-V-V137-23461/2 | 964535420000 | 359 | 100 | 4.0 | 300/1500C |
| 05 | 3-V-V329-23461/2 | 964535430000 | 304 | 100 | 2.7 | 250/2500C |
| 06 | 3-V-V465-23461/2 | 964535440000 | 545 | 200 | 5.4 | 500/3500C |
| 07 | 3-V-C520-23461/2 | 964536900000 | 84 | 30 | 0.3 | 65/1500C |
| 08 | 3-V-C524-23461/2 | 964536910000 | 184 | 75 | 1.1 | 150/1500C |
| 09 | 3-V-C526-23461/2 | 964536920000 | 234 | 75 | 1.6 | 200/1500C |
| 10 | 3-V-N826-23461/3 | 964650010000 | 850 | 90 | 12.4 | 32"/150C |
| 11 | 3-V-W587-23461/2 | 964535770000 | 256 | 100 | 2.05 | 200/2750C |
| 12 | 3-V-W551-23461/2 | 964535890000 | 408 | 50 | 3.06 | 500/2750C |
| 13 | 3-V-V377-23461/2 | 964535910000 | 466 | 150 | 6.13 | 350/2500& 400/2500 |
| 14 | 3-V-3318-23461/2 | 964653630000 | 827 | 80 | 11.6 | 700/1500 |
| 15 | 3-V-LA44-23461/1 | 964620330000 | 262 | 30 | 1.26 | 200/C900 |
| 16 | 3-V-LD35-23461 | 964665660000 | 542 | 200 | 9.02 | 450/C2850 |

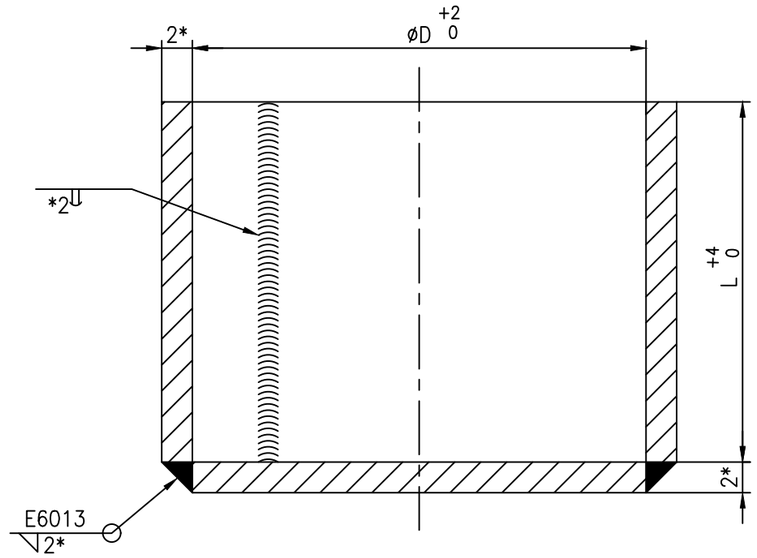


NOTE:-

1. MATERIAL SPECIFICATION :- IS1079 HR1
2. *SHEET THICKNESS 1.6 ALSO ACCEPTABLE.

| NO OF | DESCRIPTION | MATL CODE | MATL SPECN | HEAT TREATMENT | SCRAP SORT | NET WT (kg) | GROSS WT (kg) | DRAWING No. / COMP. CODE | ITEM No |
|---|---|---|---|---|---|---|---|---|---|
| - | - | - | - | - | - | - | - | - / - | - |

TYPE OF PRODUCT
OR NAME OF
CUSTOMER/PROJECT

BHARAT HEAVY ELECTRICALS LTD.,
UNIT: HIGH PRESSURE BOILER PLANT.
TIRUCHIRAPALLI-620014.
365-191
02.03.2021

| | NAME | SIGN | DATE | NO.OF VAR. |
|---|---|---|---|---|
| DRN | V.BAIRAVAN | | 24.12.04 | — |
| CHD | K.RAJASEKARAN | | 24.12.04 | |
| APPD | M.RAJAKUMAR | | 24.12.04 | |

DEPT: VL
CODE: 320
SCALE: NTS
WEIGHT (KG): REF.TABLE
REFERENCE INFORMATIONS: CAD REF:C323461
NO. OF ITEMS: —

TITLE: METALLIC END COVERS (FABRICATED)
CARD CODE: U 01
DRAWING NO.: 3-V-0000-23461
REV: 11

| DCP No. | ALTD: | APPD: | DCP No. | ALTD: | APPD: |
|---|---|---|---|---|---|
| - | TS | SSK | 801963 | MS | SSK |
| | CHD: RPS | DT: 22.10.21 | | CHD: MS | DT: 16.07.15 |

| REV | | REV | |
|---|---|---|---|
| 11 | SL. No. 16 INCLUDED. | 10 | MATERIAL IS 1079 HR1 WAS IS 1079 Gr. ST 34 |
| ZONE - | | ZONE - | |

CAUTION: The information on this document is the property of BHARAT HEAVY ELECTRICALS LTD. It must not be used directly or indirectly in any way detrimental to the interest of the company.

Size A3

DRAWING NO: 2-V-0000-15483

ALL DIMENSIONS ARE IN MILLIMETRES. FOR TOLERANCES OF UNTOLERANCED DIMENSIONS DURING MANUFACTURE REFER RELEVANT QCP / QP

| SL.No. | DRAWING No. | MATL. CODE | øD $^{+2}_{0}$ | L $^{+4}_{0}$ | NET WT (Kg) | APPLICABLE VALVE SIZES |
|---|---|---|---|---|---|---|
| 01 | 2-V-G041-15483/3 | 964530010000 | 92.5 | 30 | 0.24 | 65/1500 GL,RE |
| 02 | 2-V-W049-15483/3 | 964530020000 | 98.5 | 30 | 0.27 | 65/1500 WG |
| 03 | 2-V-W001-15483/3 | 964530030000 | 102.5 | 30 | 0.28 | 65/2500 WG,GL,RE,65/1500 NR |
| 04 | 2-V-G004-15483/3 | 964530040000 | 106.5 | 40 | 0.35 | 65/3500 GL,80/1500 GL,RE |
| 05 | 2-V-L161-15483/3 | 964530050000 | 112.5 | 40 | 0.38 | 80/1500 NR,65/2500 NR |
| 06 | 2-V-G145-15483/3 | 964530060000 | 117.5 | 40 | 0.40 | 80/2500/ GL,80/1500 WG |
| 07 | 2-V-W345-15483/3 | 964530070000 | 122.5 | 50 | 0.49 | 65/3500 RE,80/2500 WG |
| 08 | 2-V-L025-15483/3 | 964530080000 | 127.5 | 40 | 0.45 | 80/3500 RE,80/2500 NR |
| 09 | 2-V-G001-15483/3 | 964530090000 | 137.5 | 50 | 0.57 | 100/1500 RE,GL,WG,100/2500 RE,GL |
| 10 | 2-V-L053-15483/3 | 964530100000 | 142.5 | 40 | 0.53 | 100/1500 NR |
| 11 | 2-V-W369-15483/3 | 964530110000 | 147.5 | 40 | 0.56 | 80/3500 WG |
| 12 | 2-V-W002-15483/3 | 964530120000 | 152.5 | 50 | 0.66 | 100/2500 WG,NR |
| 13 | 2-V-W353-15483/3 | 964530130000 | 158 | 75 | 0.69 | 125/2500 WG |
| 14 | 2-V-W441-15483/3 | 964530140000 | 163 | 50 | 0.73 | 125/1500 WG,RE |
| 15 | 2-V-W065-15483/3 | 964530150000 | 188 | 75 | 1.13 | 150/2500 WG,NR |
| 16 | 2-V-W057-15483/3 | 964530160000 | 193 | 75 | 1.17 | 150/1500 WG,NR |
| 17 | 2-V-G002-15483/3 | 964530170000 | 205 | 75 | 1.28 | 150/2500 RE,GL |
| 18 | 2-V-W113-15483/3 | 964530180000 | 238 | 75 | 1.58 | 200/1500 WG,NR |
| 19 | 2-V-L002-15483/3 | 964530190000 | 243 | 100 | 1.93 | 200/2500 NR |
| 20 | 2-V-W003-15483/3 | 964530200000 | 248 | 100 | 1.98 | 200/2500 WG |
| 21 | 2-V-L177-15483/3 | 964530210000 | 287.5 | 100 | 2.43 | 250/2500 NR,WG,250/1500 WG |
| 22 | 2-V-L129-15483/3 | 964530220000 | 293 | 100 | 2.50 | 250/1500 NR |
| 23 | 2-V-W061-15483/3 | 964530230000 | 340 | 100 | 3.10 | 300/1500 WG,NR |
| 24 | 2-V-W005-15483/3 | 964530240000 | 354.5 | 100 | 3.29 | 300/2500 WG,NR |
| 25 | 2-V-W117-15483/3 | 964530250000 | 383 | 100 | 3.69 | 350/1500 WG |
| 26 | 2-V-L121-15483/3 | 964530260000 | 393 | 100 | 3.84 | 350/1500 NR |
| 27 | 2-V-W465-15483/3 | 964530270000 | 403 | 100 | 3.99 | 350/2000 WG |
| 28 | 2-V-L029-15483/3 | 964530280000 | 418.5 | 100 | 4.22 | 300/2000 ELB,350/2500 NR |
| 29 | 2-V-W006-15483/3 | 964530290000 | 423 | 150 | 5.33 | 350/2500 WG |
| 30 | 2-V-L081-15483/3 | 964530300000 | 443 | 150 | 5.70 | 350/2500 SCH |
| 31 | 2-V-L113-15483/3 | 964530310000 | 448 | 100 | 4.68 | 300/2000 ELB,350/2750 WG |
| 32 | 2-V-W069-15483/3 | 964530320000 | 473 | 150 | 6.25 | 400/2500 WG |
| 33 | 2-V-G137-15483/3 | 964530330000 | 482 | 150 | 6.43 | 400/2500 RE,18"/150C GV |
| 34 | 2-V-W457-15483/3 | 964530340000 | 503 | 100 | 5.60 | 450/1500 WG |
| 35 | 2-V-W073-15483/3 | 964530350000 | 533 | 175 | 8.10 | 450/2500 WG |
| 36 | 2-V-W515-15483/3 | 964530360000 | 558 | 175 | 8.65 | 450/2000 WG |
| 37 | 2-V-W417-15483/3 | 964530370000 | 613 | 150 | 9.17 | 600/1500 WG |
| 38 | 2-V-W077-15483/2 | 964531150000 | 563 | 175 | 8.77 | 500/2750 WG |
| 39 | 2-V-W505-15483/1 | 964531160000 | 197 | 75 | 1.21 | 150/2750 WG |
| 40 | 2-V-L033-15483/3 | 964531740000 | 513 | 200 | 8.33 | 450/2500 SCH |
| 41 | 2-V-L169-15483/2 | 964531750000 | 463 | 150 | 6.09 | 400/2500 SCH |
| 42 | 2-V-W393-15483/2 | 964531760000 | 458 | 100 | 4.86 | 400/1500 WG |
| 43 | 2-V-L089-15483/2 | 964531770000 | 168 | 80 | 1.02 | 125/1500 & 125/2500 SCH |
| 44 | 2-V-W752-15483/2 | 964533550000 | 593 | 175 | 9.20 | 500/2850 SPL WG |
| 45 | 2-V-W021-15483/2 | 964533590000 | 325 | 100 | 2.94 | 300/2500 WG (FOR P91) |
| 46 | 2-V-K616-15483/4 | 964650090000 | 638 | 100 | 9.2 | 24"/150C GV |
| 47 | 2-V-N589-15483/4 | 964650110000 | 372 | 100 | 3.4 | 14"/150C GV |
| 48 | 2-V-N370-15483/4 | 964650100000 | 532 | 100 | 6.4 | 20"/150C GV |
| 49 | 2-V-N594-15483/4 | 964650120000 | 440 | 100 | 4.4 | 16"/300C GV |
| 50 | 2-V-3204-15483/2 | 964651370000 | 790 | 70 | 10.5 | 700MM/1500 RHID |
| 51 | 2-V-P366-15483/2 | 964652090000 | 311 | 40 | 1.8 | 10"/C300-RV |
| 52 | 2-V-WA81-15483/3 | 964660030000 | 685 | 200 | 12.6 | 550/3000 SPL GV |
| 53 | 2-V-NG24-15483/2 | 964653650000 | 486 | 100 | 5.3 | 18/300-GV |
| 54 | 2-V-3319-15483/2 | 964654100000 | 869 | 70 | 12.3 | 800/1500-RHID |
| 55 | 2-V-P560-15483/2 | 964654140000 | 356 | 40 | 2.3 | 300/300-RV |
| 56 | 2-V-3314-15483/2 | 964661000000 | 970 | 125 | 17.6 | 800/600-RHID |
| 57 | 2-V-U482-15483/2 | 964661010000 | 882 | 110 | 14.6 | 700/1500-RHID |
| 58 | 2-V-F999-15483/1 | 964655050000 | 1023 | 80 | 16.95 | 38"/600C GV,38"/300C SCV |
| 59 | 2-V-L401-15483 | 964663610000 | 790 | 175 | 14.5 | 24"/C3000 NRV |
| 60 | 2-V-V567-15483 | 964665240000 | 345 | 120 | 3.52 | 10"/C3500 GV |
| 61 | 2-V-L420-15483 | 964665280000 | 179 | 45 | 0.82 | 4"/C3500 SCV |
| 62 | 2-V-G371-15483 | 964665290000 | 212 | 40 | 0.71 | 6"/C3500 GLV |
| 63 | 2-V-WD11-15483 | 964665300000 | 774 | 162 | 13.7 | 22"/C3500 GV |
| 64 | 2-V-V396-15483 | 964665440000 | 519 | 200 | 8.5 | 450/C2500 GV |
| 65 | 2-V-L435-15483/1 | 964665450000 | 638 | 190 | 11.01 | 22"/2500C NRV |
| 66 | 2-V-G366-15483 | 964665470000 | 212 | 80 | 1.4 | 6"/3500C GNV |
| 67 | 2-V-V730-15483 | 964665490000 | 695 | 185 | 12.4 | 22"/3500C GV |
| 68 | 2-V-3394-15483 | 964665500000 | 902 | 125 | 12.78 | 32"/600C RHID |
| 69 | 2-V-3311-15483/1 | 964658050000 | 812 | 150 | 14.20 | 30"/600C-RHID |
| 70 | 2-V-G390-15483/1 | 964665520000 | 131 | 40 | 0.50 | 3"/3500C-GLV / GNV |
| 71 | 2-V-NK44-15483 | 964659030000 | 760 | 45 | 8.89 | 28"/300C GV |
| 72 | 2-V-U829-15483/1 | 964665530000 | 732 | 185 | 13.35 | 22"/3500C GV F92 |
| 73 | 2-V-3397-15483/1 | 964665540000 | 756 | 140 | 12.32 | 28"/900C RHID F92 |
| 74 | 2-V-V771-15483/1 | 964665560000 | 802 | 300 | 19.88 | 22"/C3750C GV |
| 75 | 2-V-V711-15483/1 | 964665570000 | 184 | 75 | 1.12 | 6"/900C GV |
| 76 | 2-V-3369-15483/1 | 964659160000 | 958 | 175 | 19.7 | 36"/600C RHID |
| 77 | 2-V-V768-15483/1 | 964665580000 | 254 | 80 | 1.82 | 6"/1500C GV F92 |
| 78 | 2-V-V756-15483 | 964665590000 | 222 | 80 | 1.50 | 6"/3500C GV F92 |
| 79 | 2-V-NK85-15483 | 964659170000 | 812 | 100 | 12.2 | 28"/300C GV WCB |
| 80 | 2-V-G402-15483 | 964665600000 | 229 | 80 | 1.57 | 6"/3750C GLV / GNV |
| 81 | 2-V-V772-15483 | 964665610000 | 280 | 95 | 2.30 | 8"/3000C GV |
| 82 | 2-V-V780-15483 | 964665620000 | 754 | 300 | 18.24 | 22"/3650C GV |
| 83 | 2-V-L442-15483 | 964665640000 | 368 | 100 | 3.51 | 12"/2750C SCV |
| 84 | 2-V-V794-15483 | 964665680000 | 601 | 150 | 8.95 | 22"/900C GV |
| 85 | 2-V-V632-15483 | 964665730000 | 478 | 150 | 6.39 | 16"/ 2750C GV |
| 86 | 2-V-3367-15483 | 964730360000 | 674 | 125 | 9.81 | 600/900C-RHID |
| 87 | 2-V-LD39-15483 | 964665930000 | 608 | 175 | 9.86 | 20"/ 3000C NRV |
| 88 | 2-V-LD36-15483 | 964666000000 | 700 | 150 | 11.27 | 24"/ 2500C NRV |
| 89 | 2-V-LD38-15483 | 964666050000 | 458 | 130 | 5.56 | 14"/ 3000C NRV |

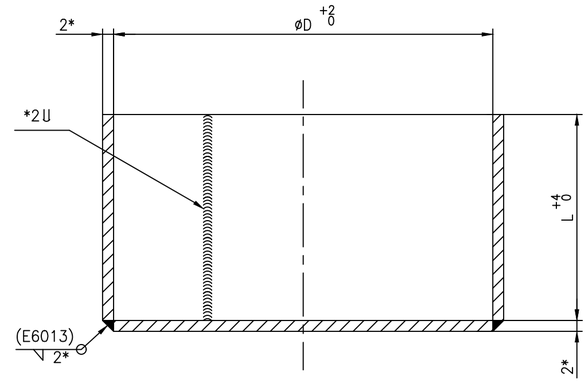


NOTE:

1.MATERIAL SPECIFICATION: IS 1079 HR1

2. *SHEET THICKNESS 1.6 ALSO ACCEPTABLE.

| No OFF | DESCRIPTION | MATL CODE | MATL SPECN | HEAT TREATMENT | SCRAP SORT | NET WT (kg) | GROSS WT (kg) | DRAWING No. / COMP. CODE | ITEM No |
|---|---|---|---|---|---|---|---|---|---|
| – | – | – | – | – | – | – | – | – | – |

TYPE OF PRODUCT
OR NAME OF
CUSTOMER/PROJECT

BHARAT HEAVY ELECTRICALS LTD.,
UNIT: HIGH PRESSURE BOILER PLANT.
TIRUCHIRAPALLI-620014.
365-190
02.03.2021

| | NAME | SIGN | DATE | NO.OF VAR. |
|---|---|---|---|---|
| DRN | V.BAIRAVAN | | 05.08.15 | – |
| CHD | S.SATHEES | | 05.08.15 | |
| APPD | K.RAJASEKARAN | | 05.08.15 | |

| DCP No. | ALTD: TS | APPD: MK |
|---|---|---|
| – | CHD: RPS | DT: 13.03.25 |

REV 48 — SL. No. 89 INCLUDED.

ZONE –

DEPT VL | CODE 320 | SCALE NTS | WEIGHT (KG). REF. TABLE | REFERENCE INFORMATIONS | NO. OF ITEMS –

TITLE: METALLIC END COVERS (FABRICATED)

CARD CODE: U 01

DRAWING NO. 2-V-0000-15483

REV 48

Size A2

CAUTION: The information on this document is the property of BHARAT HEAVY ELECTRICALS LTD. It must not be used directly or indirectly in any way detrimental to the interest of the company.

# PART-I (TECHNO-COMMERCIAL BID)

**(To be filled by bidder & submit with offer as pdf file only)**

| | |
|---|---|
| **Tender Enquiry No. & Date** | **2526-058E Dt. 11.10.2025** |
| **Tender Description** | **Supply of Metal End Cover** |

Bidder must note following points:
1. This workbook is protected, except for cells where comments / confirmation is to be given by bidder.
2. Bidder is advised not to unprotect / tamper the sheet / alter the terms mentioned in the sheet.
3. Any alteration to terms mentioned by BHEL will be considered as tampering and bidder's offer shall be liable for rejection.
4. Bidders are advised to only fill the unprotected cells (shaded cells) by dropdown or writing the comments as applicable as their confirmation. **Bidders are adviced to submit duly filled & signed 'PDF' file as techno-commercial (Part-I) bid'**. Failure on the part of bidder in not returning this duly filled-up techno-commercial bid and / or submitting incomplete replies may lead to rejection of bidder's quotation.
5. All the commercial terms and conditions shall be indicated by vendor in this format only and nowhere else in his quotation. However, in case the space for vendor's reply is not sufficient against a particular question, the vendor shall furnish same by way of separate annexure / sheet attached to this questionnaire, indicating cross-reference of respective clauses.

## BIDDER's DETAILS

| Sr. No. | Elements | | Remarks | |
|---|---|---|---|---|
| 1 | Name of the Firm / Company | | | |
| 2 | Registered Address | | | |
| 3 | Quotation reference no. & date | | | |
| 4 | Contact person Details | Name / Designation | | |
| | | Contact Number | | |
| | | Email ID (can be more than one) | | |
| 6 | Bidder Type (Indian / Foreign): | | | |
| 7 | Type of Owenership | | Select from drop down list | |
| 8 | Company's Nature of Business | | Select from drop down list | |
| 9 | Year of commencement of Business | | | |
| 10 | PAN No. | | | |
| 11 | GST No. | | | |
| 12 | Whether company is registered under MSMED Actr 2006 as Micro / Samll / Medium Enterprise category. *(If yes, please attach valid certificate as per latest MSME guidelines)* | | Select from drop down list | **If yes, mention UDYAM registration number Here** |
| | If Yes, Please specify the Enterprise Category | | Select from drop down list | |
| | Ownership status of MSE Bidder | | Select from drop down list | |
| 11 | BHEL IVP vendor code | | If avaliable, mention Vendor code Here | |
| 12 | BHEL Trichy vendor code | | If avaliable, mention Vendor code Here | |

## TECHNICAL CONDITION DETAIL

| Sr. No. | Elements | Response | Remarks |
|---|---|---|---|
| 1 | Technical : Supply of METAL END COVER as per tender documents (if selected 'Accepted with deviation', please mention the deviation clearly) | Select from drop down list | |

## COMMERCIAL CONDITIONS & DETAILS

| Sr. No. | Elements | Response | Remarks (if any) |
|---|---|---|---|
| 1 | Delivery term: FOR BHEL IVP Goindwal (refer tender terms & conditions) | Select from drop down list | |
| 2 | IGST supply (%) | Select from drop down list | |
| 3 | SGST supply (%) | Select from drop down list | |
| 4 | CGST supply (%) | Select from drop down list | |
| 5 | Validity: 75 days from techno commercial bid opening. (refer tender terms & conditions) | Select from drop down list | |
| 6 | Delivery period: Within 90 Days from placement of PO / LOI. (refer tender terms & conditions). Quotation of bidder not accepting delivery terms, shall be rejected. | Select from drop down list | |
| 7 | Submission of UDYAM Certificate or Self Declaration by Bidder : It is hereby declared that Bidder is 'manufacturer of Sheet Metalwork / Fabrication items' (Refer special terms) | Select from drop down list | |

# PART-I (TECHNO-COMMERCIAL BID)

**(To be filled by bidder & submit with offer as pdf file only)**

| | |
|---|---|
| **Tender Enquiry No. & Date** | **2526-058E Dt. 11.10.2025** |
| **Tender Description** | **Supply of Metal End Cover** |

Bidder must note following points:
1. This workbook is protected, except for cells where comments / confirmation is to be given by bidder.
2. Bidder is advised not to unprotect / tamper the sheet / alter the terms mentioned in the sheet.
3. Any alteration to terms mentioned by BHEL will be considered as tampering and bidder's offer shall be liable for rejection.
4. Bidders are advised to only fill the unprotected cells (shaded cells) by dropdown or writing the comments as applicable as their confirmation. **Bidders are adviced to submit duly filled & signed 'PDF' file as techno-commercial (Part-I) bid'**. Failure on the part of bidder in not returning this duly filled-up techno-commercial bid and / or submitting incomplete replies may lead to rejection of bidder's quotation.
5. All the commercial terms and conditions shall be indicated by vendor in this format only and nowhere else in his quotation. However, in case the space for vendor's reply is not sufficient against a particular question, the vendor shall furnish same by way of separate annexure / sheet attached to this questionnaire, indicating cross-reference of respective clauses.

| | | | | |
|---|---|---|---|---|
| 8 | Manufacturers shall provide list of inhouse machinery available to prove Sheet Metalwork / Fabrication item manufacturing. (Refer special terms) | | Select from drop down list | |
| 9 | Documents regarding Purchase Order/s of any type of 'Sheet Metalwork / Fabrication items' against any customer purchase order(s)/Job work order(s) with minimum cumulative order value of ₹ 1,00,000.00 (Rupees One Lakh only)(Refer special terms) | | Select from drop down list | |
| 10 | Breach of contract, Remedies and Termination (Refer Clause 14 of General Contract Conditions (GCC)). | | Select from drop down list | |
| 11 | Conflict of Interest among Bidders / Agents (Refer clause no. 11 of General Contract conditions (GCC)) | | Select from drop down list | |
| 12 | LD clause: Penalty for late delivery will be applicable @ 0.5% per week or part thereof subject to a maximum of 10.0 %. (Refer Clause 18 of General Contract Conditions (GCC)). | | Select from drop down list | |
| 13 | Payment term: (Refer clause no. 09 of General Contract conditions (GCC)) | | Select from drop down list | |
| 14 | **Warranty Period**: Supplier shall give a warrantee for a period of 18 months from the date of receipt. In case of non-acceptance of this term bid will be rejected. (Refer clause no. 19 of GCC) | | Select from drop down list | |
| 15 | Please attach valid MSE certificate latest MSME Guidelines (Refer clause no. 17 of GCC) | | Select from drop down list | |
| 16 | Make in India (MII) (Refer clause no. 20 of GCC) | Local Content Declaration | Select from drop down list | |
| | | Details of location at which local value addition will be made is as follows: | Select from drop down list | |
| 17 | Certificate regarding Restrictions Under Rule 144(XI) of The GFR, 2017 (Refer clause no. 32 of GCC) | I have read the clause regarding restrictions on procurement from a bidder of a country which shares a land border with India; I certify that this bidder is not from such a country or, if from such a country, has been registered with the Competent Authority. I hereby certify that this bidder fulfils all requirements in this regard and is eligible to be considered. | Select from drop down list | |
| 18 | Firm Price: The quoted / finalised rates shall be firm till execution of the supplies. | | Select from drop down list | |
| 19 | I have thoroughly gone through the attached tender terms & conditions and understood the above techno-commercial requirements | | Select from drop down list | |
| 20 | Rates quoted are net of taxes & FOR BHEL IVP Goindwal basis | | Select from drop down list | |
| 21 | If there is any deviation in reference to any of the tender term, kindly mention it **HERE** only. **Deviation specified elsewhere, will not be considered.** | | Select from drop down list | |
| 22 | Declaration regarding Insolvency/ Liquidation/ Bankruptcy proceedings (Refer clause no. 35 of GCC) | Bidder is not admitted under insolvency resolution process or liquidation under Insolvency and Bankruptcy Code, 2016, as amended from time to time or under any other law as on date, by NCLT or any adjudicating authority/authorities. | Select from drop down list | |

## Item detail

| Item Sl. no. | Material Code | Description | Qty (in nos.) | Quoted / not quoted |
|---|---|---|---|---|
| 1 | 964652780000 | METAL END COVER-2885 | 1200 | Select from drop down list |

# PART-I (TECHNO-COMMERCIAL BID)

**(To be filled by bidder & submit with offer as pdf file only)**

| | |
|---|---|
| **Tender Enquiry No. & Date** | **2526-058E Dt. 11.10.2025** |
| **Tender Description** | **Supply of Metal End Cover** |

Bidder must note following points:
1. This workbook is protected, except for cells where comments / confirmation is to be given by bidder.
2. Bidder is advised not to unprotect / tamper the sheet / alter the terms mentioned in the sheet.
3. Any alteration to terms mentioned by BHEL will be considered as tampering and bidder's offer shall be liable for rejection.
4. Bidders are advised to only fill the unprotected cells (shaded cells) by dropdown or writing the comments as applicable as their confirmation. **Bidders are adviced to submit duly filled & signed 'PDF' file as techno-commercial (Part-I) bid'**. Failure on the part of bidder in not returning this duly filled-up techno-commercial bid and / or submitting incomplete replies may lead to rejection of bidder's quotation.
5. All the commercial terms and conditions shall be indicated by vendor in this format only and nowhere else in his quotation. However, in case the space for vendor's reply is not sufficient against a particular question, the vendor shall furnish same by way of separate annexure / sheet attached to this questionnaire, indicating cross-reference of respective clauses.

| | | | | |
|---|---|---|---|---|
| 2 | 964652840000 | METAL END COVER-2886 | 200 | Select from drop down list |
| 3 | 964652900000 | METAL END COVER-2887 | 400 | Select from drop down list |
| 4 | 964652950000 | METAL END COVER-2888 | 240 | Select from drop down list |
| 5 | 964652980000 | METAL END COVER-N235 | 250 | Select from drop down list |
| 6 | 964652790000 | METAL END COVER-N289 | 1600 | Select from drop down list |
| 7 | 964653040000 | METAL END COVER-N575 | 250 | Select from drop down list |
| 8 | 964653020000 | METAL END COVER-N593 | 60 | Select from drop down list |
| 9 | 964653030000 | METAL END COVER-N594 | 1000 | Select from drop down list |
| 10 | 964653060000 | METAL END COVER-N595 | 50 | Select from drop down list |
| 11 | 964653070000 | METAL END COVER-N805 | 30 | Select from drop down list |
| 12 | 964650010000 | METAL END COVER-N826 | 30 | Select from drop down list |
| 13 | 964653000000 | METAL END COVER-N903 | 200 | Select from drop down list |
| 14 | 964530040000 | METAL. END COVER-G004 | 480 | Select from drop down list |
| 15 | 964530010000 | METAL. END COVER-G041 | 120 | Select from drop down list |
| 16 | 964530140000 | METAL. END COVER-W441 | 80 | Select from drop down list |

We further, confirm that we have quoted the rates in the tender considering Inter-alia the
1. Tender Document(s)
2. Additional Document(s) (if any)
3. BOQ Document (Price Bid Format-Part-II)
4. Corrigendum (if any)
5. Pre Bid Meeting Minutes (if any)

We hereby certify that we have fully read and thoroughly understood the tender requirements and accept all terms and conditions of the tender including all corrigendum/addendum issued (if any). Our offer is in confirmation to all the terms and conditions of the tender including all corrigendum/addendum (if any) and minutes of the pre-bid meeting (if any). In the event our offer is found acceptable and Order is placed /Contract is awarded to us, the complete tender document shall be considered for constitution of Order / Contract Agreement.

Validate Print Help

# Item Wise BoQ

**Tender Inviting Authority: BHEL IVP Goindwal Sahib**

**Name of Work: Supply of METAL END COVER**

**Contract No: 2526-058E Dated 11.10.2025**

| Name of the Bidder/ Bidding Firm / Company : | |
|---|---|

**PRICE SCHEDULE**

**(This BOQ template must not be modified/replaced by the bidder and the same should be uploaded after filling the relevent columns, else the bidder is liable to be rejected for this tender. Bidders are allowed to enter the Bidder Name and Values only )**

| NUMBER # | TEXT # | TEXT # | NUMBER # | TEXT # | NUMBER # | NUMBER # |
|---|---|---|---|---|---|---|
| Sl. No. | Item Description | Item Code / Make | Quantity | Units | BASIC RATE In Figures To be entered by the Bidder in Rs. P | TOTAL AMOUNT excluding taxes in Rs. P |
| 1 | METAL END COVER-2885 | 964652780000 | 1200 | No. | | 0.00 |
| 2 | METAL END COVER-2886 | 964652840000 | 200 | No. | | 0.00 |
| 3 | METAL END COVER-2887 | 964652900000 | 400 | No. | | 0.00 |
| 4 | METAL END COVER-2888 | 964652950000 | 240 | No. | | 0.00 |
| 5 | METAL END COVER-N235 | 964652980000 | 250 | No. | | 0.00 |
| 6 | METAL END COVER-N289 | 964652790000 | 1600 | No. | | 0.00 |
| 7 | METAL END COVER-N575 | 964653040000 | 250 | No. | | 0.00 |
| 8 | METAL END COVER-N593 | 964653020000 | 60 | No. | | 0.00 |
| 9 | METAL END COVER-N594 | 964653030000 | 1000 | No. | | 0.00 |
| 10 | METAL END COVER-N595 | 964653060000 | 50 | No. | | 0.00 |
| 11 | METAL END COVER-N805 | 964653070000 | 30 | No. | | 0.00 |
| 12 | METAL END COVER-N826 | 964650010000 | 30 | No. | | 0.00 |
| 13 | METAL END COVER-N903 | 964653000000 | 200 | No. | | 0.00 |
| 14 | METAL. END COVER-G004 | 964530040000 | 480 | No. | | 0.00 |
| 15 | METAL. END COVER-G041 | 964530010000 | 120 | No. | | 0.00 |
| 16 | METAL. END COVER-W441 | 964530140000 | 80 | No. | | 0.00 |
| Total in Figures | | | | | | 0.000 |