		BHARAT HEAVY ELECTRICALS LIMITED HEAVY POWER EQUIPMENT PLANT PURCHASE DEPARTMENT/PUMPS RAMACHANDRAPURAM, HYDERABAD		Ref:F7/RC/24-26/LGB ASSEMBLY			
Sl.No	**Material Code**	**Project**	**Material Description**	**Quantity**	**Required Delivery Date**	**Delivery Period Quoted by Vendor (Number of days from date of approved drawing or QAP whichever occurs later)**	**Delivery Place**
1	FP9750588193	8x800 MW Adani Projects	LGB ASSLY WITH INSTRUMENTS-VAR NO 19	8	5 Months from the date of approved documents		Project Site
2	FP9750588355		LGB ASSY FOR LO SERVICE(TD) INST-VAR 35	16			
3	FP9750588410		LGB FOR 3 CEPS-660/800 MW	8			
4	FP9750588479		LGB ASSEMBLY - VAR NO.47	8			
5	FP9750588541		LGB ASSY FOR FW SERVICE INST-VAR54	24			
6	FP9750588550		LGB ASSY FOR SW&CW SERVICE TDBFP-VAR55	16			
7	FP9750588568		LGB ASSY FOR SW&CW SERVICE MDBFP-VAR56	8			
8	FP9750588576		LGB ASSY FOR DRIP PUMP INST-VAR57	8			

Sl.No	Material Code	Project	Material Description	Quantity	Required Delivery Date	Delivery Period Quoted by Vendor (Number of days from date of approved drawing or QAP whichever occurs later)	Delivery Place
9	FP9750588541	NTPC LARA NTPC SINGRAULI	LGB ASSY FOR FW SERVICE INST-VAR54	8	5 Months from the date of approved documents		Project Site
10	FP9750588550		LGB ASSY FOR SW&CW SERVICE TDBFP-VAR55	8			
11	FP9750588355		LGB ASSY FOR LO SERVICE(TD) INST-VAR 35	8			
12	FP9750588541		LGB ASSY FOR FW SERVICE INST-VAR54	4			
13	FP9750588568		LGB ASSY FOR SW&CW SERVICE MDBFP-VAR56	4			
14	FP9750588479		LGB ASSEMBLY - VAR NO.47	4			
15	FP9750588193		LGB ASSLY WITH INSTRUMENTS-VAR NO 19	4			
16	FP9750588410		LGB FOR 3 CEPS-660/800 MW	4			
17	FP9750588576		LGB ASSY FOR DRIP PUMP INST-VAR57	4			

Sl.No	Material Code	Project	Material Description	Quantity	Required Delivery Date	Delivery Period Quoted by Vendor (Number of days from date of approved drawing or QAP whichever occurs later)	Delivery Place
18	FP9750588320	DVC Raghunathpur (2x660MW)	LGB ASSY FOR FW SERVICE INST-VAR 32	8	5 Months from the date of approved documents		Project Site
19	FP9750588401		LGB 660MW TDBFP SW&CW AND LO SYS	4			
20	FP9750588398		LGB 660MW MDBFP SW&CW AND LO SYS	4			
21	FP9750588193		LGB ASSLY WITH INSTRUMENTS-VAR NO 19	2			
22	FP9750588410		LGB FOR 3 CEPS-660/800 MW	2			

Note:

1-Vendor to provide the best delivery period inline with BHEL requirement.BHEL has right to reject/accept the offer based on delivery date.

2-Reverse Auction is NOT applicable for subject rate contract.

3-ITB 13 is applicable for the rate contract

4-Integrity pact (IP) is applicable and documents pertaining to IP which will be included in NIT are enclosed.

5-Customer approved suppliers are applicable for the tender. Offers received through Open tender will be evaluated as per BHEL PQR and technical specification. Offers of technically suitable vendors shall be taken up with customer for their acceptance.The price bids of those vendors, who are approved/accepted by customer shall be opened & the price bids of those vendors, who are not approved/accepted by customer shall not be opened.

6-Delivery period is 5 Months from date of approved drawing or QAP whichever occurs later. Delivery term is for Destination Project Site. After finalisation of rate contract,BHEL will place the PO as per site requirement. Any delay will be calculated as per Annexure-I

7-All the items to be procured from single source. Splitting is not applicable.Evaluation of the offer will be done on total cost to BHEL (all the line items in the enquiry put together).

8-PVC clause is not applicable for the tender.

9-Material Quantity mentioned in the enquiry documents are projected quantity for next two years.

Based on Customer requirement and scope finalisation,Materail code and instruments quantity for some projected quantities may vary during PO placement.

Vendor is requested to submit the prices of the individual list of Instruments and Hook up lines available with enquiry documents. Same will be considered for price finalisation (in case of any change in no of instruments). Price of list of instruments should be submitted along with price bid.In case of any clarification required, please take confirmation before technical bid opening.

BHARAT HEAVY ELECTRICALS LIMITED
RAMACHANDRAPURAM:: HYDERABAD-502032

PUMPS ENGINEERING DEPARTMENT

TECHNICAL PRE-QUALIFICATION REQUIREMENTS

Item: LGB (Local Gauge Board)

PROCEDURE FOR EVALUATION OF OFFERS FOR OPEN TENDERS

The offers will be submitted as two part bid system i.e., Techno –commercial offer including PQR (Part-1) and price offer (Part-2).

Initially, only techno – commercial offer will be opened for scrutiny.

Offers will be evaluated as follows:

(A) Techno – commercial offer (Part-1):

1) The Pre-qualification requirements and credentials as per the table in Annexure-1 will be evaluated and only those offers passing this evaluation will be considered.
   (a) For the items, which are not listed in the customer approved vendor list, the offers passing the BHEL PQR evaluation only will be considered for Technical evaluation.
   (b) For the items, which are listed in the customer approved vendor list, the credentials of those vendors not figuring in the customer approved list will be further forwarded to our end customer for their approval. The offers of those vendors who will be approved by customer only will be considered for Technical evaluation.
2) Technical scrutiny of Offers: The offers meeting the PQR and technical requirements will only be considered for further processing.

(B) Price offer (Part -2) :

The price bids shall be opened of those vendors only who will be approved by BHEL/customer as per above.

M. Mahesh Kumar Naik

సురేశ్ కుమార్ · सुरेश कुमार
SURESH KUMAR
उप महाप्रबंधक / पंप्स अभियांत्रिकी
Dy. General Manager / Pumps Engg.
बी.एच.ई.एल.-एचपीईपी, हैदराबाद-32, BHEL-HPEP, HYD-32

Annexure-1

SL.NO.	REQUIREMENT	ACCEPTANCE	REMARKS
1.	Similar LGB and accessories supplied earlier	Supply of similar or bigger LGB supplied to at-least two thermal power stations, and which are in satisfactory operation for a minimum period of one year each.	a) Reference List of supplies made so far. b) Un-priced PO copies of the two reference supplies. c) End-user certificates of the two reference stations.
2.	Design / Engineering capability for designing of suitable LGB to meet BHEL specification requirements	Vendors must have exclusive R & D division/Design division/Collaboration.	Details of R&D facility/Design facility or Collaboration documents to be furnished.
3.	Manufacturing facilities	Vendor must have manufacturing facilities for similar type of LGB.	Detail list of Manufacture facility shall be furnished.
4.	Testing facilities	Vendor must have testing facilities for similar type of LGB.	Test reports to be furnished
5.	Inspection agencies for earlier supplies	Lloyds / TUV / NTPC / BHEL / SGS / BHEL TPIA or any other International/ Indian inspection agency.	Copies of earlier inspection certificates to be furnished.
6.	Service after Sales & supply of spare parts	Availability of service center and technical experts to meet the after sales service requirements for the supplied equipment at project sites.	Details of the service centers and technical expertise to be furnished.

NOTE: The Suppliers not meeting the above criteria OR not submitted the above required documents will be disqualified.

M. Mahesh Kumar Naik.

సురేశ్ కుమార్ · सुरेश कुमार
SURESH KUMAR
उप महाप्रबंधक / पम्पस अभियांत्रिकी
Dy. General Manager / Pumps Engg.
बी.एच.ई.एल.-एचपीईपी, हैदराबाद-32, BHEL-HPEP, HYD-32

COPYRIGHT AND CONFIDENTIAL
The information on this document is the property of BHARAT HEAVY ELECTRICALS LIMITED .
It must not be used directly or indirectly in any way detrimental to the interest of the company.

TECHNICAL SPECIFICATION FOR LOCAL GAUGE BOARD WITH INSTRUMENTS AND TUBING MOUNTED

1.0.0 INTENT OF THE SPECIFICATION:

This specification is intended to describe the technical requirements for the procurement of local gauge board and mounting of instruments with necessary compression fittings. These local gauge boards are meant for Boiler Feed Pump sets /Condensate Extraction Pumps and other pumps.

2.0.0 SCOPE OF SUPPLY:

Supply of local gauge board with mounted instruments, tubing, wiring, junction boxes, Cables and cable trays, wiring from switches to junction box, foundation bolts, testing and dispatch to site / BHEL stores. A typical arrangement of LGB Drg No.21800054637 is enclosed. No of instruments shall be mounted as per the enquiry varient. Vendor shall furnish the local guage board drg after placement of purchase order for approval.

3.0.0 AESTHETICS:

Top must priority shall be given for aesthetics in Design, manufacture, assembly and painting. All the edges of the gauge boards shall be smoothly ground without the appearance of any gas cut edge.

4.0.0 TECHNICAL REQUIREMENTS:

4.1.0 The instrument panel shall be manufactured as per the following specifications/ drawings.

4.2.0 Informative Instrument tubing loop diagram as per drg no. 41800057023, Rev-04 (6 sheets). End view of the tubing as per fig.2.

4.3.0 Instruments & fittings specification & suppliers name as per relevant annexure-1 (unless specified in the enquiry).

4.4.0 DEVIATIONS:-

Deviations to the specifications if any shall be clearly indicated by the suppliers under the heading “Deviations to specification” referring specification clause & sub clause.BHEL have the right to reject the offer of suppliers based on the deviations indicated in their offer.

If no deviations are furnished in the offer it shall be inferred that the supplier is complying all requirements of the specification. No deviations to technical requirements like make, range & scope of supply will be entertained after the placement of order.

4.5.0 Deleted.

4.6.0 Junction boxes to be made as per the specification no. FP60152.

4.7.0 Wiring shall be done as per enclosed JB connection diagram. And also wiring diagram shall be printed inside of the front door or shall be pasted with transparent cover for ready reference at site.

COPYRIGHT AND CONFIDENTIAL
The information on this document is the property of BHARAT HEAVY ELECTRICALS LIMITED .
It must not be used directly or indirectly in any way detrimental to the interest of the company.

4.8.0 Vendor shall follow the check list for Pr.& Diff. Pr. Switches if indicated along with order. For these orders vendor shall intimate in advance to BHEL for instruments stage witness by customer where ever applicable or vendor can take up with Customer directly for Inspection.

5.0.0 CONSTRUCTION:

The instrument board shall be made of cold rolled sheet steel of 3.15 mm thickness at the front, 2.0 mm for the side & doors, 3 mm thickness on the top and 10mm thickness plate for the bottom of the instrument board. A continuous canopy extending beyond the ends of the rack shall be constructed of not less than 3 mm thick sheet and it is to be bolted to top of the gauge rack as shown in the drawing. Side and top covers shall be supported by 35 x 35 mm angles. The entire gauge board shall be mounted on 2 nos. of 150 x 75 mm channels. Gauge rack shall have grounding termination facility. Each ground point shall be readily accessible for removal, testing and replacement.

Illuminated with rapid start fluorescent strip fixtures with guards to be installed for lightning the interior as well as front fascia. Separate lightning switches shall be mounted for inside and outside lamps.

The pressure and temperature gauges shall be flush mounted on the front side. The pressure switches shall be mounted on two rails. The rail shall be fixed on the rear of front sheet. The entire enclosure shall be supported on each side by rectangular ducts. Each duct must have a partition inside along the heights to separate cables and capillary tubes for temperature instruments.

For pressure instruments impulse tubes shall be of 12.7 x 2.1 seamless stainless steel tubes. All tubes shall be terminated in bulk head fittings, which are mounted at bottom (ref.drg.). All drains shall be connected to drain header and terminated on a separate bulk head fittings. Clamps shall be provided for tubing.

Capillary for temperature gauges shall be neatly tied with rail mounted inside the panel. Provision to be made from gauge rack through duct mounted at side to run capillary at site.

All pressure switches cabling shall be terminated in a junction box fixed through support duct as shown in the drawing. The number of junction boxes and terminal shall be as per drawing. Cable trays are to be fixed on rails to run cable from switches to junction box.

Armored multi core (7 cores x 1.5 mm²), FRLS cable with voltage grade of 1100V shall be used for cabling of all switches.

COPYRIGHT AND CONFIDENTIAL
The information on this document is the property of BHARAT HEAVY ELECTRICALS LIMITED .
It must not be used directly or indirectly in any way detrimental to the interest of the company.

6.0.0 LABELS:

All the instruments in the front board shall be provided with individual permanent engraved labels with **service designation & tag nos.** and this information will be furnished while executing the order. The labels shall be made of black ebonite strips and the engraving shall be in white color.

These labels shall be attached with pin head screws. Labels are to be provided at front facial in case of gauges/indicators and on rails for switches and also on bulk head plate. Label indication of 'HIGH' and 'LOW' also to be fixed at bulk head plate for Diff. pr. gauges & Diff. pr. switches. **The labels with tag nos. will be provided after placement of order against project wise.**

7.0.0 PAINTING

a. Surface finish:-The instrument board shall be through cleaned by sand blasting, degreasing, pickling and phosphating.

b. Primer paint: - It shall be given two coats of anti corrosive paint.

c. Final paint: -shall be epoxy based finish to have a maximum dry film of 125 microns. Final finish shall be Smoke Grey (Matt finish) shade 692 of IS:5 for outside and white Glossy enamel shade for inside of the gauge board.

7.1.0 Painting for Adani project var no. 19, 35,41,47,54 to 57 shall be as per Annexure IV.

8.0.0 INSPECTION: -

8.1.0 Hydraulic pressure testing shall be carried out on 100% quantity tubing with fittings & valves (without gauges) to ensure zero leakage. Hydraulic pressure testing and final inspection shall be offered for BHEL inspection.

8.2.0 **Final inspection: -**

8.2.1 Visual inspection for aesthetics, surface finish and workman ship & paint quality.

8.2.2 Wiring continuity test for switches.

8.2.3 Verification of manufacturers test certificate for instruments.

8.2.4 Dimensional verification as per approved drawing.

9.0.0 DOCUMENTATION: -

9.0.1 Documents enclosed along with enquiry by BHEL.

1. Specification copy no. FP50588
2. Tubing diagram drg.no. 41800057023 (6 sheets)
3. List of labels description & tag numbers.(Later)
4. Technical specification of instruments, cables and manifold valves – as per relevant Annexure.
5. Typical arrangement of LGB Assy Drg.21800054637.

9.0.2 Documents to be submitted by the vendor:

1. Along with offer

a. Out side gauge board drawing indicating cutout sizes & overall dimensions as per the variants.

b. Bill of materials for the items included with the gauge board as per specification.

c. Vendors shall indicate the probable instruments supplier name & model no. and also relevant informative catalogues to be furnished.

2. After placement of purchase order.

a. Final drg of LGB for approval.

b. Final bill of materials for approval.

c. Final vendors list for approval.

d. Wiring diagram for connection of switches / Digital temp. Indicators.

e. Data sheet for instruments like make, model no and range etc.& for cables.

f. Catalogues for all instruments.

g. 5 prints & 1 soft copy of approved front panel layout and bill of materials.

3. At the time of inspection.

a. Test, guarantee, calibration certificates for all the instruments.

10.0.0 PACKING:-

Local gauge board shall be properly packed to with stand the transit risks. Liberal quantities of silica gel shall be placed around the instrument and tubing area to avoid corrosion due to ingress of moisture. The packing shall be sea-worthy.

Suitable packing material (like bubble polythene sheets, thermocol etc) shall be provided inside the packing case to avoid damage to instruments and fittings during transit and handling. Top of the packing case shall be painted on the outside for handling.

COPYRIGHT AND CONFIDENTIAL
The information on this document is the property of BHARAT HEAVY ELECTRICALS LIMITED .
It must not be used directly or indirectly in any way detrimental to the interest of the company.

COPYRIGHT AND CONFIDENTIAL
The information on this document is the property of BHARAT HEAVY ELECTRICALS LIMITED .
It must not be used directly or indirectly in any way detrimental to the interest of the company.

Annexure – I

VENDORS LIST FOR INSTRUMENTS AND OTHER FITTINGS FOR ALL PROJECTS (UNLESS SPECIFIED IN THE ENQUIRY)

SL. NO	INSTRUMENT DESCRIPTION	SPEC.NO	REV	SUPPLIERS NAME	REMARKS
01	PRESSURE GAUGE	FP60123	05	GIC, MUMBAI/ GAUGES BOURDON(I) WIKA INSTRUMENTS,PUNE WAAREE INSTRUMENTS,MUMBAI FORBES MARSHAL, HYD A.N. INSTRUMENTS, KOLKATA WALCHANDNAGAR INDUSTRIES LIMITED	
02	DIFF.PR.GAUGE	FP60124	04	SWITZER, CHENNAI WIKA INSTRUMENTS,PUNE ASHCROFT (I) PVT LTD H. GURU (S.I) PVT LTD GAUGES BOURDON INDIA (GIC) WALCHANDNAGAR INDUSTRIES LIMITED	
03	PR.SWITCH DIFF.PR.SWITCH	FP60125 FP60126	04 05	SWITZER, CHENNAI SOR USA, ITT BORTON USA	
04	TEMP.GAUGE	FP60127	05	A.N. INSTRUMENTS, CALCUTTA. GIC, MUMBAI WIKA INSTRUMENTS,PUNE FORBES MARSHAL, HYD GOA INSTRUMENTS PVT LTD WALCHANDNAGAR INDUSTRIES LIMITED	
05	COMPRESSION FITTINGS			SWASTIK ENGG WORKS MUMBAI. PRECISION ENGG, MUMBAI EXCEL HYDRO, MUMBAI HP VALVES & FITTINGS, CHENNAI	
06	MANIFOLD VALVES	HY7316561 AA7316501	00 00	SWASTIK ENGG WORKS MUMBAI. SKILT FAB, MUMBAI MICRO PRE. PROD., FARIDABAD TECHNOMATIC IND, MUMBAI EXCEL HYDRO, MUMBAI PREC ENGG IND, MUMBAI HP VALVES & FITTINGS, CHENNAI	

COPYRIGHT AND CONFIDENTIAL
The information on this document is the property of BHARAT HEAVY ELECTRICALS LIMITED .
It must not be used directly or indirectly in any way detrimental to the interest of the company.

Annexure – II

(FOR VAR NOS . 32 TO 36 & 19 (FOR NTPC BARH)

SL. NO	INSTRUMENT DESCRIPTION	SPEC.NO	REV	SUPPLIERS NAME	REMARKS
01	PRESSURE GAUGE	FP60123	05	GIC, MUMBAI WIKA INSTRUMENTS,PUNE BELLS CONTROLS, KOLKATA H.GURU, KOLKATA & B'LORE	
02	DIFF.PR.GAUGE	FP60124	04	SWITZER, CHENNAI BUDENBERG, UK ASHCROFT, USA ITT, BARTON	
03	TEMP.GAUGE	FP60127	05	A.N. INSTRUMENTS, CALCUTTA. GIC, MUMBAI BELLS CONTROLS, CHENNAI H.GURU/SI, B'LORE	
04	COMPRESSION FITTINGS			PRECISION ENGG, MUMBAI EXCEL HYDRO, MUMBAI HP VALVES & FITTINGS, CHENNAI	
05	MANIFOLD VALVES	HY7316561 AA7316501	00 00	SKILT FAB, MUMBAI MICRO PRE. PROD., FARIDABAD TECHNOMATIC IND, MUMBAI EXCEL HYDRO, MUMBAI PREC ENGG IND, MUMBAI HP VALVES & FITTINGS, CHENNAI	

COPYRIGHT AND CONFIDENTIAL
The information on this document is the property of BHARAT HEAVY ELECTRICALS LIMITED .
It must not be used directly or indirectly in any way detrimental to the interest of the company.

Annexure – III

(FOR RVUNL SURATGARH 2 X 660 MW)

SL. NO	INSTRUMENT DESCRIPTION	SPEC.NO	REV	SUPPLIERS NAME	REMARKS
01	PRESSURE GAUGE	FP60123	05	GIC, MUMBAI WIKA INSTRUMENTS,PUNE BELLS CONTROLS, KOLKATA H.GURU, KOLKATA & B'LORE A.N.INSTRUMENTS GAUAGES BOURDON INDUSTRIAL EQPT.CO. ODION DRUCK INDIA	
02	DIFF.PR.GAUGE	FP60124	04	INDFOSS AN INSTRUMENTS SWITZER, CHENNAI WAAREE INSTRUMENTS LTD GENERAL INSTRUMENTS LTD H.GURU	
03	TEMP.GAUGE	FP60127	05	G.I. CONSORTIUM BELLS CONTROLS, CHENNAI WAAREE INSTRUMENTS LTD DRESSER-USA	
04	COMPRESSION FITTINGS			PRECISION ENGG, MUMBAI EXCEL HYDRO, MUMBAI HP VALVES & FITTINGS, CHENNAI	
05	MANIFOLD VALVES	HY7316561 AA7316501	00 00	SKILT FAB, MUMBAI MICRO PRE. PROD., FARIDABAD TECHNOMATIC IND, MUMBAI EXCEL HYDRO, MUMBAI PREC ENGG IND, MUMBAI HP VALVES & FITTINGS, CHENNAI	

COPYRIGHT AND CONFIDENTIAL
The information on this document is the property of BHARAT HEAVY ELECTRICALS LIMITED .
It must not be used directly or indirectly in any way detrimental to the interest of the company.

VAR. TABLE NO-1 (REFER PURCHASE ENQUIRY FOR VALID VARIENT Nos.)

VAR NO.	PR. GAUGE (FP60123, Rev. 05)			DIFF. PR. GAUGE (FP60124, Rev. 04)			PR. SWITCH (FP60125, Rev. 04)			DIFF. PR.SWITCH (FP60126, Rev. 05)			TEMP. GAUGE (FP60127, Rev. 05)			JUNCTION BOX (FP60152, Rev. 02)		MATERIAL CODE	REMARKS
	RANGE	QTY	VARNO	RANGE	QTY	VARNO	RANGE	QTY	VARNO	RANGE	QTY	VARNO	RANGE	QTY	VARNO	NO.OF TERMINALS	NO. OF JBs		
01	0-16 0-25 0-350	1 3 1	03 04 08	0-0.4	1	01	0-35	1	08	-	-	-	0-200 0-120 0-60	2 4 2	04 05 01	12 64	1 1	FP9750588010	GENERAL 1NO./BFP
02	0-4	7	02	-	-	-	-	-	-	-	-	-	0-120	4	02	72	1	FP9750588029	GENERAL 1NO/BFP
03	-1 to +1 0-40	2 2	01 05	0 - 0.15	2	02	-	-	-	-	-	-	0-120	2	03	64	1	FP9750588037	GENERAL 1NO/2CEPs
04	0-16 0-25 0-350	1 3 1	03 04 08	0-0.4 0-0.5	1 1	01 03	0-35	1	08	-	-	-	0-200 0-120 0-60	2 4 2	04 05 01	12 96	1 1	FP9750588045	UNCHAHAR /O.P.JINDAL 1NO/BFP
05	0-4	7	02	-	-	-	-	-	-	-	-	-	0-120 0-120	4 6	02 05	72	1	FP9750588053	UNCHAHAR /O.P.JINDAL 1NO/BFP
06	-1 to +1 0-40	3 3	01 05	0 - 0.15	3	02	-	-	-	-	-	-	0-120	3	03	64	1	FP9750588061	GENERAL 1NO/3CEPs
07	0-16 0-25 0-350	1 3 1	03 04 08	0-0.4	1	01	0-35	1	08	-	-	-	0-200 0-120 0-60	2 4 2	04 05 01	48	1	FP9750588070	RVUNL DHOLPUR 1NO./BFP
08	0-4	6	02	-	-	-	-	-	-	-	-	-	0-120	4	02	-	-	FP9750588088	RVUNL DHOLPUR 1NO/BFP

COPYRIGHT AND CONFIDENTIAL
The information on this document is the property of BHARAT HEAVY ELECTRICALS LIMITED .
It must not be used directly or indirectly in any way detrimental to the interest of the company.

VAR. TABLE NO-1 (REFER PURCHASE ENQUIRY FOR VALID VARIENT Nos.)

VAR NO.	PR. GAUGE (FP60123, Rev. 05)			DIFF. PR. GAUGE (FP60124, Rev. 04)			PR. SWITCH (FP60125, Rev. 04)			DIFF. PR.SWITCH (FP60126, Rev. 05)			TEMP. GAUGE (FP60127, Rev. 05)			JUNCTION BOX (FP60152, Rev. 02)		MATERIAL CODE	REMARKS
	RANGE	QTY	VARNO	RANGE	QTY	VARNO	RANGE	QTY	VARNO	RANGE	QTY	VARNO	RANGE	QTY	VARNO	NO.OF TERMINALS	NO. OF JBs		
10	0 - 4 0 - 16 0 - 25 0 - 350	7 1 3 1	02 03 04 08	0-0.4	1	01	0-35	1	08	-	-	-	-	-	-	12 96	1 1	FP9750588100	GENERAL 1NO/BFP
11	-1 to +1 0-40	2 2	01 05	0 - 0.15	2	02	-	-	-	-	-	-	-	-	-	64	1	FP9750588118	NALCO-9&10, 2x120MW
12	0-4	5	02	-	-	-	-	-	-	-	-	-	0-120	4	02	72	1	FP9750588126	TATA POWER UNIT # 6, 1 x 120 MW
13	0-6 0-25 0-250	1 3 1	11 04 07	0-0.4	1	01	-	-	-	-	-	-	0-200 0-120 0-60	2 4 2	04 05 01	64	1	FP9750588134	BORL BINA
14	0-4	6	02	-	-	-	-	-	-	-	-	-	0-120	4	02	72	1	FP9750588142	BORL BINA
15	0-16 0-40 0-350	1 3 1	03 05 08	0-0.4 0-0.5	1 1	01 03	0-40	1	03	-			0-200	2	06	12 96	1 1	FP9750588150	500MW BFP FW-1 No / BFP
16	-			0-0.4 0-2.0	2 2	01 04	-			0-0.5 0-2.0	2 2	01 03	0-120	12	05	36 64	1 2	FP9750588169	500MW BFP S.W & CW-1 / BFP
17	0-4	8	02	-			-			-			0-120	10	05	64 48	1 1	FP9750588177	500MW MD BFP OIL SER 1/BFP

COPYRIGHT AND CONFIDENTIAL
The information on this document is the property of BHARAT HEAVY ELECTRICALS LIMITED .
It must not be used directly or indirectly in any way detrimental to the interest of the company.

VAR. TABLE NO-1 (REFER PURCHASE ENQUIRY FOR VALID VARIENT Nos.)

VAR NO.	PR. GAUGE (FP60123, Rev. 05)			DIFF. PR. GAUGE (FP60124, Rev. 04)			PR. SWITCH (FP60125, Rev. 04)			DIFF. PR.SWITCH (FP60126, Rev. 05)			TEMP. GAUGE (FP60127, Rev. 05)			JUNCTION BOX (FP60152, Rev. 02)		MATERIAL CODE	REMARKS
	RANGE	QTY	VARNO	RANGE	QTY	VARNO	RANGE	QTY	VARNO	RANGE	QTY	VARNO	RANGE	QTY	VARNO	NO.OF TERMINALS	NO. OF JBs		
18	0-4	6	02	-			-			-			0-120	8	05	96	2	FP9750588185	500MW- TD BFP OIL SER-1 / BFP
19	-1 TO +1	3	01	0-0.15	3	02	-			-			-			-		FP9750588193	500MW CEP 1No / 3 CEPS
20	0-16 0-40	3 3	03 05	-			-			-			0-120	3	03	48	2	FP9750588207	500MW CEP 1No / 3 CEPS
21	0-16 0-40 0-350	1 3 1	03 05 08	0-0.4 0-0.5	1 1	01 03	-			-			0-200	2	06	12 96	1 1	FP9750588215	500MW BFP FW-1 No / BFP (FOR ARAVALI ETC)
22	-			0-0.4 0-2.0	2 2	01 04	-						0-120	12	05	36 64	1 2	FP9750588223	500MW BFP SW&CW/ BFP (FOR ARAVALI ETC)
23	-1 to +1 0-60	2 2	01 06	0-0.15	2	02	-			-			0-120	2	03	64	1	FP9750588231	PRAGATI BAVANA 1NO/2CEPs

COPYRIGHT AND CONFIDENTIAL
The information on this document is the property of BHARAT HEAVY ELECTRICALS LIMITED .
It must not be used directly or indirectly in any way detrimental to the interest of the company.

VAR. TABLE NO-1 (REFER PURCHASE ENQUIRY FOR VALID VARIENT Nos.)

VAR NO.	PR. GAUGE (FP60123, Rev. 05)			DIFF. PR. GAUGE (FP60124, Rev. 04)			PR. SWITCH (FP60125, Rev. 04)			DIFF. PR.SWITCH (FP60126, Rev. 05)			TEMP. GAUGE (FP60127, Rev. 05)			JUNCTION BOX (FP60152, Rev. 02)		MATERIAL CODE	REMARKS
	RANGE	QTY	VARNO	RANGE	QTY	VARNO	RANGE	QTY	VARNO	RANGE	QTY	VARNO	RANGE	QTY	VARNO	NO.OF TERMINALS	NO. OF JBs		
24	0-4 0-25 0-350	4 2 1	02 04 08	0-0.4	1	01	0-35	1	08	-	-	-	0-200 0-120 0-60 0-120	2 4 2 2	04 05 01 02	12 64	1 2	FP9750588240	IISCO BURNPUR 1NO./BFP
25	0-4	8	02	--	--	--	--	--	--	--	--	--	0-120	12	05	96	2	FP9750588258	500MW MD BFP SW/CW & OIL SER UKAI ONWARDS
26	0-4	6	02	--	--	--	--	--	--	--	--	--	0-120	12	05	96	2	FP9750588266	500MW TD BFP SW/CW & OIL SER UKAI ONWARDS
27 & 28	DELETED																		
29	0-4 0-16 0-25 0-350	5 1 1 1	02 03 04 08	0-0.4	1	01	0-16 0-25	2 1	02 09	0-0.5	1	04	0-200 0-120 0-120 0-60	2 3 4 2	07 08 05 01	12 64	1 1	FP9750588290	BHATINDA R & M * ALL GAUGES WITH 100MM DIAL ALSO ACCEPTABLE
30	-	-	-	0-0.4 0-2.0	2 2	01 04	-	-	-	0-0.5 0-2.0	2 2	01 03	-	-	-	36 64	1 1	FP9750588304	TUTICORIN 500 MW

COPYRIGHT AND CONFIDENTIAL
The information on this document is the property of BHARAT HEAVY ELECTRICALS LIMITED .
It must not be used directly or indirectly in any way detrimental to the interest of the company.

VAR. TABLE NO-1 (REFER PURCHASE ENQUIRY FOR VALID VARIENT Nos.)

VAR NO.	PR. GAUGE (FP60123, Rev. 05)			DIFF. PR. GAUGE (FP60124, Rev. 04)			PR. SWITCH (FP60125, Rev. 04)			DIFF. PR.SWITCH (FP60126, Rev. 05)			TEMP. GAUGE (FP60127, Rev. 05)			JUNCTION BOX (FP60152, Rev. 02)		MATERIAL CODE	REMARKS
	RANGE	QTY	VARNO	RANGE	QTY	VARNO	RANGE	QTY	VARNO	RANGE	QTY	VARNO	RANGE	QTY	VARNO	NO.OF TERMINALS	NO. OF JBs		
31	0-4	8	02	-	-	-	-	-	-	-	-	-	0-120	4	02	-	-	FP9750588312	IOCL PARADIP FOR MD UB BFP
32	0-25 0-60 0-400	1 2 1	04 06 09	0-0.5	2	03	-	-	-	-	-	-	0-200	2	06	-	-	FP9750588320	BARH 660MW FW-1NO/BFP (MHI BFP)
33	-	-	-	0-0.5 0-2.0	2 2	03 04	-	-	-	-	-	-	0-120	12	05	96	2	FP9750588339	BARH 660MW SW&CW 1NO/BFP (MHI BFP)
34	0-4	6	02	-	-	-	-	-	-	-	-	-	0-200 0-200 0-120 0-120 0-120	2 2 2 2 2	09 10 11 12 05	-	-	FP9750588347	BARH 660MW MD BFP OIL SER 1NO/MD BFP (MHI BFP)
35	0-4	4	02	-	-	-	-	-	-	-	-	-	0-200 0-200 0-120 0-120	2 2 2 2	09 10 11 12	-	-	FP9750588355	BARH 660MW TD BFP OIL SER 1NO/TD BFP (MHI BFP)
36	0-16 0- 60	3 3	03 06	-	-	-	-	-	-	-	-	-	0-200	3	13	64	2	FP9750588363	BARH 660MW CEP 1NO/3CEPs (MHI CEP)

COPYRIGHT AND CONFIDENTIAL
The information on this document is the property of BHARAT HEAVY ELECTRICALS LIMITED .
It must not be used directly or indirectly in any way detrimental to the interest of the company.

VAR. TABLE NO-1 (REFER PURCHASE ENQUIRY FOR VALID VARIENT Nos.)

VAR NO.	PR. GAUGE (FP60123, Rev. 05)			DIFF. PR. GAUGE (FP60124, Rev.			PR. SWITCH (FP60125, Rev. 04)			DIFF. PR.SWITCH (FP60126, Rev. 05)			TEMP. GAUGE (FP60127, Rev. 05)			JUNCTION BOX (FP60152, Rev. 02)		MATERIAL CODE	REMARKS
	RANGE	QTY	VARNO	RANGE	QTY	VARNO	RANGE	QTY	VARNO	RANGE	QTY	VARNO	RANGE	QTY	VARNO	NO.OF TERMINALS	NO. OF JBs		
37	0- 16 0 - 25 0 - 350	1 3 1	03 04 08	0-0.4 0-0.5	1 1	01 03	-	-	-	-	-	-	0-200 0-120 0-60	2 4 2	04 05 01	12 96	1 1	FP9750588371	KBUNL MUZAFARPUR FOR BFP
38	-1 to +1 0 - 16 0 - 40	2 2 2	01 03 05	0 – 0.15	2	02	-	-	-	-	-	-	0-120	2	03	64	1	FP9750588380	KBUNL MUZAFARPUR FOR CEP
39	0 - 4	7	02	-	-	-	-	-	-	-	-	-	0-200 0-120	2 10	09 05	96	2	FP9750588398	MHI BFP660MW 30% MDBFP SW CW&LO SYS 1NO/BFP
40	0 - 4	4	02	-	-	-	-	-	-	-	-	-	0-200 0-200 0-120	2 2 8	09 10 05	96	2	FP9750588401	MHI BFP660MW TDBFP SW CW&LO SYS 1NO/BFP
41	0 - 60	3	06	-	-	-	-	-	-	-	-	-	0-200	3	13	64	2	FP9750588410	MHI CEP 1NO / 3CEPS
42	0 - 4	6	02	-	-	-	-	-	-	-	-	-	0-200 0-200 0-120	2 2 8	09 10 05	96	2	FP9750588428	MHI BFP 50% MDBFP SW CW&LO SYS 1NO/BFP

COPYRIGHT AND CONFIDENTIAL
The information on this document is the property of BHARAT HEAVY ELECTRICALS LIMITED .
It must not be used directly or indirectly in any way detrimental to the interest of the company.

VAR. TABLE NO-1 (REFER PURCHASE ENQUIRY FOR VALID VARIENT Nos.)

VAR NO.	PR. GAUGE (FP60123, Rev. 05)			DIFF. PR. GAUGE (FP60124, Rev. 04)			PR. SWITCH (FP60125, Rev. 04)			DIFF. PR.SWITCH (FP60126, Rev. 05)			TEMP. GAUGE (FP60127, Rev. 05)			JUNCTION BOX (FP60152, Rev. 02)		MATERIAL CODE	REMARKS
	RANGE	QTY	VARNO	RANGE	QTY	VARNO	RANGE	QTY	VARNO	RANGE	QTY	VARNO	RANGE	QTY	VARNO	NO.OF TERMINALS	NO. OF JBs		
43	0- 25 0 - 60 0 - 400	1 2 1	04 06 09	0-0.5	2	03	-	-	-	-	-	-	0-200	2	04	96	1	FP9750588436	MHI 800MW 50% MD/TDBFP FW SYS
44	0 - 60	1	06	0-0.5	3	03	-	-	-	-	-	-	0-60 0-200	2 6	01 09	96	2	FP9750588444	MHI 800MW 50% MD/TDBFP SW & CW SYS
45	0 - 4	6	02	-	-	-	-	-	-	-	-	-	0-200	4	09	96	2	FP9750588452	MHI 800MW 50% MDBFP LO SYS
46	0 - 4	4	02	-	-	-	-	-	-	-	-	-	0-200	8	09	96	2	FP9750588460	MHI 800MW 50% TDBFP LO SYS
47	0-4	7	02	-	-	-	-	-	-	-	-	-	0.120 0-200 0-120	6 2 2	05 09 12	96	2	FP9750588479	MHI 660 MW FA1B75 + MDG 346 (MOUDA 660 MW) MD LO SERVICE
48	-1 – 1 0-60	3 3	01 06	0-0.15	3	02	-	-	-	-	-	-	0-200	3	09	64	2	FP9750588487	800 MW 50% DUTY FOR 3 CEPs

COPYRIGHT AND CONFIDENTIAL
The information on this document is the property of BHARAT HEAVY ELECTRICALS LIMITED .
It must not be used directly or indirectly in any way detrimental to the interest of the company.

VAR. TABLE NO-1 (REFER PURCHASE ENQUIRY FOR VALID VARIENT Nos.)

VAR NO.	PR. GAUGE (FP60123, Rev.07)			DIFF. PR. GAUGE (FP60124, Rev. 06)			PR. SWITCH (FP60125, Rev. 04)			DIFF. PR.SWITCH (FP60126, Rev. 05)			TEMP. GAUGE (FP60127, Rev. 07)			JUNCTION BOX (FP60152, Rev. 02)		MATERIAL CODE	REMARKS
	RANGE	QTY	VARNO	RANGE	QTY	VARNO	RANGE	QTY	VARNO	RANGE	QTY	VARNO	RANGE	QTY	VARNO	NO.OF TERMINALS	NO. OF JBs		
49	0- 6 0 - 40	2 2	11 05	0-0.15	2	02	-	-	-	-	-	-	0-200	2	09	64	2	FP9750588495	800 MW 50% DUTY FOR 2 DRIP PUMPs
50																		FP9750588509	LGB ASSY FOR LO SERVICE (TD)
51	0- 25	8	04										0-120 0-120	1 1	11 12	96	2	FP9750588517	LGB ASSY FOR SW,CW
52	0- 25 0 - 60	1 2	04 06	0-0.5	2	03							0-200	1	06	-	-	FP9750588525	PANKI 660MW FW-1NO/BFP (MHI BFP)
53	0-4	6	02										0-200	10	09	96	2	FP9750588533	PANKI 660MW LUBE OIL SYS MDBFP
54	0- 25 0 - 60 0 - 400	1 2 1	04 06 09	0-0.5	2	03	-	-	-	-	-	-	0-250	2	14	96	1	FP9750588541	ADAN 8000 MW FEEDWATERSYS
55	0 - 60	1	06	0-1.0	3	06	-	-	-	-	-	-	0-60 0-120	2 6	01 05	96	2	FP9750588550	ADAN 8000 MW TDBFP SW/CW SYS
56	-	-	-	0-1.0	4	06	-	-	-	-	-	-	0-120	12	05	96	2	FP9750588568	ADAN 8000 MW MDNFP SW/CW SYS
57	-	-	-	0-0.15	2	02	-	-	-	-	-	-	-	-	-	64	1	FP9750588576	ADAN 8000 MW DRIP PUMP

COPYRIGHT AND CONFIDENTIAL
The information on this document is the property of BHARAT HEAVY ELECTRICALS LIMITED.
It must not be used directly or indirectly in any way detrimental to the interest of the company.

TABLE-2

LOOSE INSTRUMENTS FOR BFP & CEP
(Refer Enquiry)

SL. NO	RANGE	PRODUCT STD. VARNO.	MATERIAL CODE
A. PRESSURE GAUGES (kg/cm²)			
1	-1 to +1	FP60123-01	FP9760123010
2	0 to 4	FP60123-02	FP9760123029
3	0 to 6	FP60123-11	FP9760123118
4	0 to 16	FP60123-03	FP9760123037
5	0 to 25	FP60123-04	FP9760123045
6	0 to 40	FP60123-05	FP9760123053
7	0 to 350	FP60123-08	FP9760123088
B.DIFF.PRESSURE GAUGES (kg/cm²)			
1	0 to 0.4	FP60124-01	FP9760124017
2	0 to 0.15	FP60124-02	FP9760124025
3	0 to 0.5	FP60124-03	FP9760124033
4	0 to 2.0	FP60124-04	FP9760124041
C. PRESSURE SWITCH (kg/cm²)			
1	0 TO 35	FP60125-08	FP9760125080
2	0 TO 40	FP60125-03	FP9760125048
D. DIFF. PRESSURE SWITCHES (kg/cm²)			
1	0 to 0.5	FP60126-01	FP9760126010
2	0 to 2.0	FP60126-03	FP9760126036
E. TEMPERATURE GAUGES (Deg.C)			
1	0 to 60	FP60127-01	FP9760127016
2	0 to 120	FP60127-02	FP9760127024
3	0 to 120	FP60127-03	FP9760127032
4	0 to 200	FP60127-04	FP9760127040
5	0 to 120	FP60127-05	FP9760127059
6	0 to 200	FP60127-06	FP9760127067

NOTE :- 1. All loose supply instruments shall be dispatched to BHEL stores. Each instrument is to be tied with metallic tag and the material code shall be punched on the tag as indicated in the above table.

2. Model no's of all the instruments shall be same as LGB instruments.

RECORD OF REVISIONS

Rev. No.	Date	Revision Details	Revised By	Approved By
01	20.12.05	ANNEXURE 1 AND VAR TABLE REVISED	MMR	BRK
02	30.05.06	VAR NO.07, 08, 10&11 ADDED. CL NO. 4.5.0 DELETED CL NO. 4.6.0 REVISED	MMR	BRK
03	05.06.07	VAR NO.12 ADDED.	KB	BRK
04	05.10.07	VAR NO.13 TO 20 ADDED AND SPEC GENERALLY RIVISED.	MMR	BRK
05	14.02.08	In Vendor List, M/s. A.N. Instruments deleted from Pressure Gauges (Sl no 1), DP Gauges (Sl.no.2) & Temp Gauge (Sl No 4). Range of pressure switch 0-21 changed to 0-35 kg/cmsq.	PB	BRK
06	02.05.08	In Vendor list, M/s. Bells controls, H-Guru, Samson instruments deleted. M/s.Wika, Waree &Forbes marshal added.	MMR	BRK
07	12.09.08	1. M/S A.N. Instruments included for Pr & Temp. gauges. 2. Var no. 21 & 22 added.	MMR	BRK
08	06.03.09	1. Var no. 23 & 24 added.	B. PRAKASH	BRK
09	08.10.09	1. Var no. 25 & 26 added FOR UKAI PROJECT ONWARD.	MMR	BRK
10	07.07.10	Var no. 29 added FOR BHATINDA R & M PROJECT	MMR	BRK
11	01.02.11	Var no. 30 added for TUTICORIN 500MW SW & CW System	MMR	BRK
12	23.04.11	Var no. 31 added for IOCL PARADIP LUBE OIL SYTEM FOR MD UB BFP	D.K.GUPTA	BRK
13	06.06.2011	Var no. 32 to 36 added for BARH 660 MW	MMR	BRK
14	30.01.11	HP valves & fittings included in Annexure I & II at Page 5 & 6	MMR	BRK
15	24.01.12	VAR NO. 37 ADDED.	B. PRAKASH	BRK
16	02.05.12	VAR NO. 38 ADDED.	B. PRAKASH	BRK
17	18.05.12	VAR NOS. 39, 40, 41 & 42 ADDED.	MMR	BRK
18	27.06.13	VAR NOS 43 TO 46 ADDED	MMR	BRK
19	30.01.14	VAR NO. 47 ADDED.	MMR	BRK
20	07.03.14	ANNEXURE-III ADDED	SATISH	MMR
21	11.07.14	Instrument vendor list updated at Page-5. Clause no. 4.3.0 corrected.	MMR	PS

RECORD OF REVISIONS

Rev. No.	Date	Revision Details	Revised By	Approved By
22	24.08.15	VAR NOS 48 TO 49 ADDED	DKG	BRK
23	12.04.18	1: Temperature gauges var. revised for LGB VAR no. 44 and 45. 2: Var.50 &51 are added.	KULDEEP	DKG
24	11.06.19	Annexure-I updated	DK Gupta	ASJK
25	06.02.19	VAR NO 46 UPDATED	SURESH	ASJK
26	17.05.21	VAR 52 & 53 ARE ADDED	KULDEEP	ASJK
27	24-07-21	Corrected temperature range for VAR 44,45,46	SURESH	ASJK
28	24-08-22	VAR 52 DP range corrected	KULDEEP	SURESH
29	06-05-24	VAR 54 to 57 ARE ADDED AND PAINTING CLAUSE 7.1.0 ADDED ALONG WITH ANNEXURE IV	KULDEEP	SURESH

ANNEXURE IV
PAINTING SCHEME

Primer Coat: 1 coat of inorganic ethyl self curing zinc silicate primer (coating) at 75 microns DFT/Coat to be applied by airless/pressure pot. The primer should meet the requirements of IS - 14946 performance standard. Minimum Metallic Zinc in the dry film by weight must be 75%. Volume solids of the primer must be 60% .

Intermediate coat – 1 coat of High build epoxy MIO coating cured with polyamide hardener at 100 microns DFT/ Coat to be applied by airless spray. Minimum Natural Lamellar Micaceous Iron Oxide content in the dry film must be 50% by weight. Volume solids of the product must be 60% .

Finish Coat- One coat of High Build Gloss Aliphatic Acrylic Polyurethane at 50 micron/coat dry film thickness to be applied by brush/airless spray. Volume Solids of the product must be 62%.

Total DFT minimum: 225 Microns.

Notes:

1. This paint system is equivalent to the protective paint system no S4.30 recommended for corrosion category C-4- in ISO 12944-5.
2. This system is satisfactory for surface temperatures to 90° C continuous dry temperature.
3. Colour for final coat shall be as per colour code.
4. All material shall be supplied in the manufacturers original cans, durably & legibly marked with the description of the contents. This shall include the batch number, date of manufacturing & the manufacturer's name.
5. All coating materials used shall confirm to the composition clauses given against each product in the specification. In meeting the composition clauses, the manufacturer shall provide evidence of compliance from approved third party lab before start of the job & internal test report along with every supplied batch.
6. Material containing cadmium, lead or any other toxic material to environment/personnel shall not be used.

COPYRIGHT AND CONFIDENTIAL
The information on this document is the property of BHARAT HEAVY ELECTRICALS LIMITED .
It must not be used directly or indirectly in any way detrimental to the interest of the company.

TECHNICAL SPECIFICATION OF PRESSURE GAUGE

1.0.0 SCOPE:

This standard specifies the technical requirements of pressure gauges for power plant application. The suppliers shall categorically confirm each and every point of this specification and clearly specify deviations, if any in their offers.

2.0.0 TECHNICAL REQUIREMENTS:

2.1.0 GENERAL: The gauges shall be suitable for tropical climate for operation of an ambient temperature of 0°c to 60°c and relative humidity of 10 to 95%. Copper and copper alloys shall be avoided in the construction.

2.2.0 MEASURING SYSTEM: Bourdon tube for high pressures, diaphragm or bellow type for low pressures.

2.3.0 ACCURACY: ± 1.0% of the full scale span or Better.

2.4.0 MOUNTING : Flush panel

2.5.0 PROCESS CONNECTION : ½" NPT male, Back entry

2.6.0 DIAL SIZE & PANEL CUTOUT: Dia150 mm & Dia 165 MM

2.7.0 CASE:

a) Stainless steel (SS316).
b) Case shall be weather proof & dust proof as per IP-65.
c) Safety blowout disc shall be provided.

2.8.0 DIAL & SCALE :

a) Dial shall be of suitable material with anti-corrosive finish.
b) Scale shall be linear, 270° arc concentric and graduated in kg/cm^2.
c) The marking shall be black on a non-reflection white back ground.
d) The pointer deflection angle shall be 270°.
e) Upper range pointer limit stops shall be provided.
f) Over range protection shall be provided for abnormal operating condition.
g) Micrometer screw for zero adjustment. Internal micrometer screw for range adjustment. Zero adjustment shall be external.

2.9.0 MATERIAL OF PRESSURE ELEMENT: 316 St.steel with forged socket and tip of the same material.

2.10.0 MATERIAL OF MOVEMENT: 316 St.steel with teflon coating and nylon bearings.

2.11.0 MATERIAL OF CONNECTION: 316 St.steel

Over load : Maximum scale value kg/cm^2	Over load on maximum scale Value present
For all ranges	150%

3.0.0 TESTS:

3.1.0 Each gauge shall be subjected to the following routine tests.
a) Accuracy test
b) Over range protection test(125% of max.range)
c) All the gauges shall be factory calibration through out the range at minimum five points and calibration results to be furnished.

4.0.0 TEST REPORTS :
Five copies of the following test certificates shall be furnished:

a) Calibration certificate for each gauge.
b) Test certificates for the tests specified at 3.0.0.
c) Compliance certificate for material of element, material of movement and material of construction.
d) Type test report for degree of protection test.

5.0.0 DOCUMENT: Descriptive catalogues giving full details of the gauge shall be furnished with the offer.The final operating and maintenance manuals shall be supplied within 4 weeks after placement of order.

TABLE :

VAR. NO	RANGE(Kg/cm^2)	PURPOSE	MATERIAL CODE
01	-1.0 to +1.0	Cond. pump suction	FP9760123010
02	0 to 4.0	BFP Brgs. oil supply	FP9760123029
03	0 to 16.0	BP suc. pr./CEP S.W inlet pr.	FP9760123037
04	0 to 25.0	BP disch. pressure	FP9760123045
05	0 to 40.0	BP disch. pr / CEP disch.pr.	FP9760123053
06	0 to 60.0	CEP disch. pressure	FP9760123061
07	0 to 250.0	BFP disch. pressure	FP9760123070
08	0 to 350.0	BFP disch. pressure	FP9760123088
09	0 to 400.0	BFP disch. pressure	FP9760123096
10	0 to 35	CEP disch. pressure	FP9760123100
11	0 to 6	BFP suc. pressure	FP9760123118
12	0 to 10	B.C. Leak off pressure	FP9760123126
13	0 to 160	BFP disch. Pressure	FP9760123134

COPYRIGHT AND CONFIDENTIAL
The information on this document is the property of BHARAT HEAVY ELECTRICALS LIMITED .
It must not be used directly or indirectly in any way detrimental to the interest of the company.

PRODUCT STANDARD
PUMPS
HYDERABAD

FP 60123

Rev No. 07

RECORD OF REVISIONS

Rev. No.	Date	Revision Details	Revised By	Approved By
01	15.11.00	CL.No. 2.7.0(b) Revised.	MMR	BRK
02	02.08.01	VAR.10 Added.	MMR	BRK
03	20.08.02	Material codes added in table.	MMR	BRK
04	23.06.03	VAR 11,12 Added.	HRK	BRK
05	21.02.04	Var 13 added.	AVINASH	BRK
06	14.07.21	STANDARD REVIEWED AND REAFFIRMED	VSM	ASJK
07	06.05.24	CL. No. 2.7. Revised and 2.8.0 (g) updated	KK	SK

COPYRIGHT AND CONFIDENTIAL
The information on this document is the property of BHARAT HEAVY ELECTRICALS LIMITED,
It must not be used directly or indirectly in any way detrimental to the interest of the company.

COPYRIGHT AND CONFIDENTIAL
The information on this document is the property of BHARAT HEAVY ELECTRICALS LIMITED .
It must not be used directly or indirectly in any way detrimental to the interest of the company.

TECHNICAL SPECIFICATION FOR DIFFERENTIAL PRESSURE GAUGE

1.0.0 SCOPE:

This standard specifies the technical requirements of differential pressure gauge to be used across strainer for power plant application. The suppliers shall categorically confirm each and every point of this specification and clearly specify deviations, in their offers, if any.

2.0.0 TECHNICAL REQUIREMENTS:

2.1.0 GENERAL:

The gauges shall be suitable for tropical climate for operation at an ambient temperature of 0°C to +60°C and relative humidity of 10 to 95%. Copper and copper alloys shall be avoided in the construction.

2.2.0 MEASURING SYSTEM:

Diaphragm or bellow type.

2.3.0 ACCURACY: ± 1.0% of the full scale span or better.

2.4.0 MOUNTING: Flush panel mounting.

2.5.0 PROCESS CONNECTION: a) ½" NPT male.
b) 316 St.steel material.

2.6.0 DIAL SIZES: ϕ 150mm.

2.7.0 PANEL CUTOUT: ϕ 165mm.

2.8.0 CASE :

a) Stainless steel (SS316).
b) Case shall be weather proof and dust proof as per IP-65
c) Safety blow out disc shall be provided.

2.9.0 DIAL AND SCALE :

a) Dial shall be suitable material with anti-corrosive finish.
b) The marking shall be black on a non-reflection white back ground.
c) The pointer deflection angle shall be 270º.

Revisions:	Prepared:	Approved:	Date:
Refer record of revisions sheet.	M.M.RAO	B.RAJ KUMAR	22.03.2000

d) Upper range pointer limit stops shall be provided. Pointer shall be micrometer adjustable type.
e) Over range protection shall be provided for abnormal operating conditions.
f) Micrometer screw for zero adjustment. Internal micrometer screw for range adjustment. Zero adjustment shall be external.

2.11.0 MATERIAL OF ELEMENT: 316 St. STEEL.

2.12.0 MATERIAL OF MOVEMENT: 316 St. STEEL rotary geared with nylon bearing.

2.13.0 MEDIUM: Water at 165º c.

2.14.0 MAX. STATIC PRESSURE: As per Variant Table

2.15.0 OVER LOAD / OVER RANGE: 25% over the max. Range.

3.0.0 TESTS:

3.1.0 Each gauge shall be subjected to the following routine tests.

a) Accuracy test.
b) Over range protection tests for 125% of max. Range.
c) All gauges shall be factory calibrated through out the range at minimum 3 points and calibration results to be furnished.

3.2.0 Type test for weather proofness of the enclosure.

4.0.0 TEST CERTIFICATES :

Five copies of the following test certificates shall be furnished:

a) Calibration certificate.

b) Type test reports for the tests specified at 3.0.0.

5.0.0 DOCUMENT: Descriptive on catalogues giving full details of the gauges shall be furnished with the offer. The final operating and maintenance manuals shall be supplied within 4 weeks after placement of order.

6.0.0 VARIANTS TABLE:

Var.No	Range (kg/cm²)	Static Pressure (kg/cm²)	Service	Material code
01	0 to 0.4 kg/cm²	15	BP seal filter/BP strainer	FP9760124017
02	0 to 0.15 kg/cm²	15	CEP suction strainer	FP9760124025
03	0 to 0.5 kg/cm²	30	BFP suction strainer	FP9760124033
04	0 to 2.0 kg/cm²	30	BFP Seal filters	FP9760124041
05	0 to 0.2 kg/cm²	15	CEP suction strainer	FP9760124050
06	0 to 1.0 kg/cm²	30	DPG 0-1 KG/CMSQ-VAR 06(BFP SEAL FILTER)	FP9760124068

COPYRIGHT AND CONFIDENTIAL
The information on this document is the property of BHARAT HEAVY ELECTRICALS LIMITED .
It must not be used directly or indirectly in any way detrimental to the interest of the company.

RECORD OF REVISIONS

Rev. No.	Date	Revision Details	Revised By	Approved By
01	15.11.00	CL.No. 2.8.0(b) & 6.0.0 revised		
02	29.7.02	Ranges of instruments revised at CL. No. 6.0.0		
03	19.8.02	Material code added in table 6.0.0		
04	19-10-04	Cl No: 2.15.0 revised from “To the max static pressure” to “25% over the max. Range”. Static pressure added in variant Table 6.0.0. Static Pressure of var No: 03 revised from 15 to 30. Var No:04 added	MMR	BRK
05	04.06.2016	Var. No:05 added	ROHIT	KHRK
06	06.05.2024	Var. No:06 added and clause 2.8 & 2.9 updated.	KULDEEP	SK

COPYRIGHT AND CONFIDENTIAL
The information on this document is the property of BHARAT HEAVY ELECTRICALS LIMITED,
It must not be used directly or indirectly in any way detrimental to the interest of the company.

Ref. Doc.

COPYRIGHT AND CONFIDENTIAL
The information on this document is the property of BHARAT HEAVY ELECTRICALS LIMITED .
It must not be used directly or indirectly in any way detrimental to the interest of the company.

TECHNICAL SPECIFICATION FOR THERMOMETER

1.0.0 SCOPE:

This standard specifies the technical requirements of gauge board mounting capillary type dial thermometers for power plant application. The suppliers shall categorically confirm each and every point of this specification and clearly specify deviations, if any in their offers.

2.0.0 TECHNICAL REQUIREMENTS **:**

2.1.0 GENERAL:

The gauges shall be suitable for tropical climate for operation at an ambient temperature of 0°C to +60°C and relative humidity of 10 to 95%.

2.2.0 MEASURING SYSTEM:

Mercury in steel.

2.3.0 ACCURACY : ± 1% of the full scale span or Better.

2.4.0 MOUNTING : Flush panel mounting.

2.5.0 PROCESS CONNECTION : a) As per table.
b) 316 St.steel material.

2.6.0 DIAL SIZES : ϕ 150mm.

2.7.0 PANEL CUTOUT : ϕ 165mm.

2.8.0 CASE :

a) Stainless steel (SS316).
b) Case shall be weather proof and dust proof as per IP-65

2.9.0 DIAL AND SCALE :

a) Dial shall be suitable material with anti-corrosive finish.
b) Scale shall be concentric and graduated in Deg.c.
c) The marking shall be black on a non-reflection white back ground.
d) The pointer deflection angle shall be 270º c.

2.10.0 BULB & STEM :

a) Material 316 St, steel.
b) Bulb outer dia indicated in variant table.
c) Immersion length shall be adjustable as indicated in the variant table (Ref. fig).

2.11.0 CAPILLARY: With St. steel ss 316 armout & length of 12 meters for var no.04 & 06,for all other Var nos.10 meters (15 meters also acceptable for all var.nos.)

2.12.0 RESPONSE TIME : Max. 10 seconds with out thermowell.

2.12.0 IP 55 degree of protection shall be provided.

2.14.0 THERMOWELL / SINKS: Shall be supplied for Var No. 11 & 12 as per the following requirements. Thermo wells/sinks shall be fixed with temp.gauge and dispatch.

For Temp. Gauge Var 11: Thermo well/sinks, SS, Low Pr, 3/4"NPT(M) external & 1/2" NPT(F) for Temperature gauge, Length incl .threading: 88 mm, Dia (OD) =18mm.

For Temp. Gauge Var 12: Thermo well/sinks, SS, Low Pr, 3/4"NPT(M) external & 1/2" NPT(F) for Temperature gauge, Length incl .threading: 180 mm, Dia (OD) =21 mm.

3.0.0 TESTS:

3.1.0 Each gauge shall be subjected to the following routine tests.

a) Accuracy test.

b) Response test.

All gauges shall be factory calibrated through out the range at minium 5 points and calibration results to be furnished.

4.0.0 TEST CERTIFICATES :

Five copies of the following test certificates shall be furnished:

a) Calibration certificate.

b) For tests specified at 3.0.0.

c) Type test reports for degree of protection test shall be furnished.

d) Material compliance certificates for bulb, and process connection shall be furnished.

5.0.0 DOCUMENT : Descriptive catalogues giving full details of the gauges shall be furnished with the offer.The final operating and maintenance manuals shall be supplied within 4 weeks after placement of order.

COPYRIGHT AND CONFIDENTIAL
The information on this document is the property of BHARAT HEAVY ELECTRICALS LIMITED .
It must not be used directly or indirectly in any way detrimental to the interest of the company.

COPYRIGHT AND CONFIDENTIAL
The information on this document is the property of BHARAT HEAVY ELECTRICALS LIMITED .
It must not be used directly or indirectly in any way detrimental to the interest of the company.

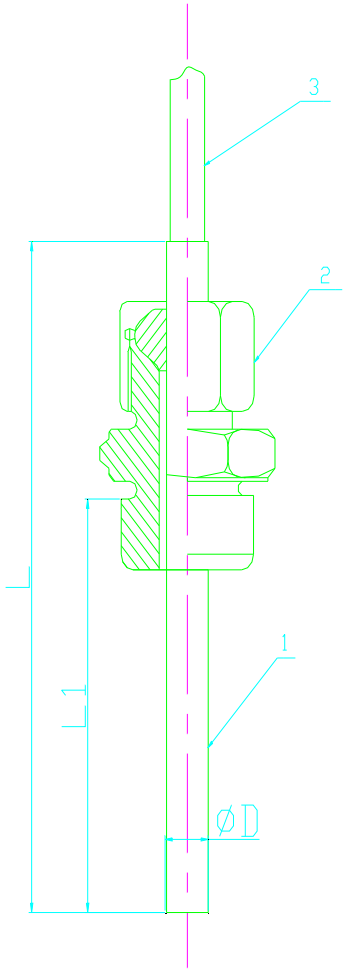

FIGURE – 1

1. **STEM**
2. **ADJ.GLAND**
3. **CAPILLARY**

6.0.0 VARIANTS :

VAR NO.	RANGE Deg.c	IMMERSION LENGTH (L1) ADJUSTABLE	TOTAL STEM LENGTH(L) (Max)	PROCESS CONN	BULB DIA D	PURPOSE	Material code.
01	0 to 60	100 – 200	250	½" NPT(M)	12	CW I & O to BFP seal cooler.JRNL.	FP9760127016
02	0 to 120	100 – 200	250	¾" NPT(M)	12	BFP,BP Brg. Metal Temp.(210mw)	FP9760127024
03	0 to 120	50 – 100	150	¾" NPT(M)	12	CEP Thrust Brg. Temp.(210/500mw)	FP9760127032
04	0 to 200	100 - 200	300	¾" NPT(M)	12	BFP suc. & disch. Temp. (210mw)	FP9760127040
05	0 to 120	100 - 200	250	½" NPT(M)	12	BFP S.W.IL& OL and BFP, BP, Motor brg. drain oil temp. for 210/500 mw. & also for brg metal temp for 500 mw BFP&BP	FP9760127059
06	0 to 200	150 - 250	300	½" NPT(M)	12	BFP suction & disch Temp. (500mw)	FP9760127067
07	0 to 200	100-200	300	M20x1.5(6g)	12	150KHI BFP suc & Disch temp.	--
08	0 to 120	100-200	250	M20x1.5(6g)	12	150 KHI BFP journal By (DE,NDE),thrust Motor DE & NDE brgs.	--
09	0-200	140-155	175	¾" NPT(M)	10	BFP JRNL Brg metal temp (MHI)660 MW	FP9760127091
10	0-200	80-95	125	¾" NPT(M)	10	BP JRNL Brg.metal Temp (MHI) 660MW	FP9760127105
11	0-120	80-95	125	½" NPT(M)	12	BP Brg.drain oil temp.(MHI) 660MW	FP9760127113
12	0-120	175-190	225	½" NPT(M)	12	BFP Brg.drain oil temp.(MHI) 660MW	FP9760127121
13	0-200	48-52	80	½" NPT(M)	6	CEP Th.Brg oil temp.(MHI) 660MW	FP9760127130
14	0 to 250	150 - 250	300	½" NPT(M)	12	BFP suction & disch Temp. (660MW)	FP9760127148

Var No. 11 & 12 shall be supplied with thermo wells/sinks.

COPYRIGHT AND CONFIDENTIAL
The information on this document is the property of BHARAT HEAVY ELECTRICALS LIMITED .
It must not be used directly or indirectly in any way detrimental to the interest of the company.

PRODUCT STANDARD
PUMPS
HYDERABAD

RECORD OF REVISIONS

Rev. No.	Date	Revision Details	Revised By	Approved By
01	15.11.00	Cl.no.2.2.0 and range of var.01 revised		
02	04.08.01	Var.no.05 added and var 01 to 03 revised		
03	21.08.02	Varient table revised & Material codes added		
05	14.07.11	Var.no. 09 to 13 added for MHI(Barh) Pumps	MMR	BRK
06	04.05.18	Var.no. 14 added	NVK	AJK
07	30.04.24	Clause 2.8 updated	KK	SK

COPYRIGHT AND CONFIDENTIAL
The information on this document is the property of BHARAT HEAVY ELECTRICALS LIMITED,
It must not be used directly or indirectly in any way detrimental to the interest of the company.

Ref. Doc.

COPYRIGHT AND CONFIDENTIAL
The information on this document is the property of BHARAT HEAVY ELECTRICALS LIMITED .
It must not be used directly or indirectly in any way detrimental to the interest of the company.

TECHNICAL SPECIFICATION FOR THERMOMETER

1.0.0 SCOPE:

This standard specifies the technical requirements of gauge board mounting capillary type dial thermometers for power plant application. The suppliers shall categorically confirm each and every point of this specification and clearly specify deviations, if any in their offers.

2.0.0 TECHNICAL REQUIREMENTS **:**

2.1.0 GENERAL:

The gauges shall be suitable for tropical climate for operation at an ambient temperature of 0°C to +60°C and relative humidity of 10 to 95%.

2.2.0 MEASURING SYSTEM:

Mercury in steel.

2.3.0 ACCURACY : ± 1% of the full scale span or Better.

2.4.0 MOUNTING : Flush panel mounting.

2.5.0 PROCESS CONNECTION : a) As per table.
b) 316 St.steel material.

2.6.0 DIAL SIZES : ϕ 150mm.

2.7.0 PANEL CUTOUT : ϕ 165mm.

2.8.0 CASE :

a) Stainless steel (SS316).
b) Case shall be weather proof and dust proof as per IP-65

2.9.0 DIAL AND SCALE :

a) Dial shall be suitable material with anti-corrosive finish.
b) Scale shall be concentric and graduated in Deg.c.
c) The marking shall be black on a non-reflection white back ground.
d) The pointer deflection angle shall be 270º c.

2.10.0 BULB & STEM :

a) Material 316 St, steel.
b) Bulb outer dia indicated in variant table.
c) Immersion length shall be adjustable as indicated in the variant table (Ref. fig).

2.11.0 CAPILLARY: With St. steel ss 316 armout & length of 12 meters for var no.04 & 06,for all other Var nos.10 meters (15 meters also acceptable for all var.nos.)

2.12.0 RESPONSE TIME : Max. 10 seconds with out thermowell.

2.12.0 IP 55 degree of protection shall be provided.

2.14.0 THERMOWELL / SINKS: Shall be supplied for Var No. 11 & 12 as per the following requirements. Thermo wells/sinks shall be fixed with temp.gauge and dispatch.

For Temp. Gauge Var 11: Thermo well/sinks, SS, Low Pr, 3/4"NPT(M) external & 1/2" NPT(F) for Temperature gauge, Length incl .threading: 88 mm, Dia (OD) =18mm.

For Temp. Gauge Var 12: Thermo well/sinks, SS, Low Pr, 3/4"NPT(M) external & 1/2" NPT(F) for Temperature gauge, Length incl .threading: 180 mm, Dia (OD) =21 mm.

3.0.0 TESTS:

3.1.0 Each gauge shall be subjected to the following routine tests.

a) Accuracy test.

b) Response test.

All gauges shall be factory calibrated through out the range at minium 5 points and calibration results to be furnished.

4.0.0 TEST CERTIFICATES :

Five copies of the following test certificates shall be furnished:

a) Calibration certificate.

b) For tests specified at 3.0.0.

c) Type test reports for degree of protection test shall be furnished.

d) Material compliance certificates for bulb, and process connection shall be furnished.

5.0.0 DOCUMENT : Descriptive catalogues giving full details of the gauges shall be furnished with the offer.The final operating and maintenance manuals shall be supplied within 4 weeks after placement of order.

COPYRIGHT AND CONFIDENTIAL
The information on this document is the property of BHARAT HEAVY ELECTRICALS LIMITED .
It must not be used directly or indirectly in any way detrimental to the interest of the company.

PRODUCT STANDARD
PUMPS
HYDERABAD

COPYRIGHT AND CONFIDENTIAL
The information on this document is the property of BHARAT HEAVY ELECTRICALS LIMITED .
It must not be used directly or indirectly in any way detrimental to the interest of the company.

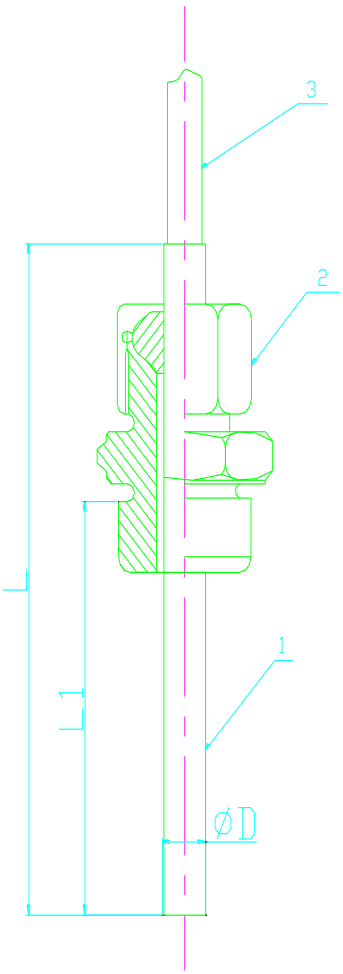

FIGURE – 1

1. **STEM**
2. **ADJ.GLAND**
3. **CAPILLARY**

6.0.0 VARIANTS :

VAR NO.	RANGE Deg.c	IMMERSION LENGTH (L1) ADJUSTABLE	TOTAL STEM LENGTH(L) (Max)	PROCESS CONN	BULB DIA D	PURPOSE	Material code.
01	0 to 60	100 – 200	250	½" NPT(M)	12	CW I & O to BFP seal cooler.JRNL.	FP9760127016
02	0 to 120	100 – 200	250	¾" NPT(M)	12	BFP,BP Brg. Metal Temp.(210mw)	FP9760127024
03	0 to 120	50 – 100	150	¾" NPT(M)	12	CEP Thrust Brg. Temp.(210/500mw)	FP9760127032
04	0 to 200	100 - 200	300	¾" NPT(M)	12	BFP suc. & disch. Temp. (210mw)	FP9760127040
05	0 to 120	100 - 200	250	½" NPT(M)	12	BFP S.W.IL& OL and BFP, BP, Motor brg. drain oil temp. for 210/500 mw. & also for brg metal temp for 500 mw BFP&BP	FP9760127059
06	0 to 200	150 - 250	300	½" NPT(M)	12	BFP suction & disch Temp. (500mw)	FP9760127067
07	0 to 200	100-200	300	M20x1.5(6g)	12	150KHI BFP suc & Disch temp.	--
08	0 to 120	100-200	250	M20x1.5(6g)	12	150 KHI BFP journal By (DE,NDE),thrust Motor DE & NDE brgs.	--
09	0-200	140-155	175	¾" NPT(M)	10	BFP JRNL Brg metal temp (MHI)660 MW	FP9760127091
10	0-200	80-95	125	¾" NPT(M)	10	BP JRNL Brg.metal Temp (MHI) 660MW	FP9760127105
11	0-120	80-95	125	½" NPT(M)	12	BP Brg.drain oil temp.(MHI) 660MW	FP9760127113
12	0-120	175-190	225	½" NPT(M)	12	BFP Brg.drain oil temp.(MHI) 660MW	FP9760127121
13	0-200	48-52	120	3/4" NPT(M)	6	CEP Th.Brg oil temp.(MHI) 660MW	FP9760127130
14	0 to 250	150 - 250	300	½" NPT(M)	12	BFP suction & disch Temp. (660MW)	FP9760127148

Var No. 11 & 12 shall be supplied with thermo wells/sinks.

COPYRIGHT AND CONFIDENTIAL
The information on this document is the property of BHARAT HEAVY ELECTRICALS LIMITED .
It must not be used directly or indirectly in any way detrimental to the interest of the company.

PRODUCT STANDARD
PUMPS
HYDERABAD

RECORD OF REVISIONS

Rev. No.	Date	Revision Details	Revised By	Approved By
01	15.11.00	Cl.no.2.2.0 and range of var.01 revised		
02	04.08.01	Var.no.05 added and var 01 to 03 revised		
03	21.08.02	Varient table revised & Material codes added		
05	14.07.11	Var.no. 09 to 13 added for MHI(Barh) Pumps	MMR	BRK
06	04.05.18	Var.no. 14 added	NVK	AJK
07	30.04.24	Clause 2.8 updated	KK	SK
08	20.05.24	Variant 13 updated corrected in line with CEP 144RND thrust bearing requirement	KK	SK

COPYRIGHT AND CONFIDENTIAL
The information on this document is the property of BHARAT HEAVY ELECTRICALS LIMITED,
It must not be used directly or indirectly in any way detrimental to the interest of the company.

Ref. Doc.

COPYRIGHT AND CONFIDENTIAL
The information on this document is the property of BHARAT HEAVY ELECTRICALS LIMITED,
It must not be used directly or indirectly in any way detrimental to the interest of the company.

TECHNICAL SPECIFICATION OF LOCAL INSTRUMENT RACKS WITH INSTRUMENTS & TUBING MOUNTED

The scope of supply includes:-

Local instrument rack, components and instruments as per typical layout drawing no. 21800054582 and TC55820 (With out Plug and connector type) & TC55817 (With Plug and connector type) (Spec for PTS & DPTS). Model nos of transmitters from each vendor is attached. Mandatory spares of 2 way, 3 way & 5 way valve manifolds and instruments of each type, model & rating shall be supplied along with LIR, if specified in the enquiry.

1.0 All racks shall be fabricated complete with internal piping and fully wired and shall be provided with necessary provision for convenience outlets, internal lighting grounding, vibration pads and other accessories as per IS ; 5039-1969 as required for completeness. Instruments shall be mounted and wired with JBs. The name plates and terminal blocks shall be provided on as required basis for racks.(Refer Annexure-1 for name plate details of LIR, Range of instruments and for the hook up lines)

1.1 No. of instruments to be mounted in LIR as per variant table/enquiry. The list of Vendors for instruments & LIR components as per vendor list indicated in this Spec. Each type of instruments/valves shall be procured from the same vendor against each order.

Instruments shall be procured as per the enclosed specification TC55817 (Weather Proof Pr. & Diff. Pr. Transmitters). Test requirements & guaranteed certificates as per the specification.

2.0 REFERENCE CODES

2.1 Racks, Panels and associated equipment EIA: - RS-310-C-1983 (ANSI C 83.9- 1972).

3.0 CONSTRUCTION FEATURES

All racks furnished as per specification shall be of free standing type and shall be constructed of specified gauge of steel plates.

The racks shall be reinforced as required to ensure true surfaces and adequate support for instruments mounted thereon. All mounting studs & support brackets shall be accurately located. All welds on the exposed panel surface shall be ground smooth. Finished panel surface shall be free from waves, bellies or other imperfections.

All rack shall have removable lifting eye bolls for safe lifting from top during storage and installation handling.

All racks shall be mounted on Rubber pads. A 2” NB pipe shall be provided for mounting transmitters in the Racks.

COPYRIGHT AND CONFIDENTIAL
The information on this document is the property of BHARAT HEAVY ELECTRICALS LIMITED .
It must not be used directly or indirectly in any way detrimental to the interest of the company.

3.1 SURFACE PREPARATION & PAINTING

Exposed raw metal edges shall be ground burr free. The entire rack surface shall be shot blasted/grid blasted to remove rust and scale and all other residue Due to the fabrication operation. Oil grease and salts etc. shall be removed from the surface by one or more solvent cleaning methods.

Two spray coats of inhibitive epoxy primer-surface shall be applied to all exterior and interior surfaces. A minimum of two spray coats of final finish colour (catalyzed epoxy finish) shall be applied to all surfaces. The final finished thickness of paint film on steel shall not be less than 100 micron and more than 150 micron. The finish colours for exterior and interior surfaces shall conform to

a) Exterior : RAL 9002.

Paint films which show sags, checks, blisters, teardrops, fat edges or other imperfections shall not be acceptable and if any such defects appear they shall be repaired by at expense of the Bidder.

The Bidder shall furnish sufficient touch-up paint for one complete finish coat on all exterior factory painted surfaces of each item of equipment. The touch-up paint shall be of the same type and color as the factory applied paint and shall be carefully packed to avoid damage during shipment. Complete painting instructions shall be furnished.

3.2 Painting Requirement:

Painting for Adani projects var no. 43 to 46 shall be as per Annexure IV

4.0 LOCAL INSTRUMENT RACKS

4.1 The local instruments racks shall be of free standing type constructed of suitable 5 mm thick channel frame of steel. The Instrument rack shall be provided with a canopy to protect equipment provided in racks from falling objects, water etc. The fabrication details of instrument racks shall be as finalized during detailed engineering stage. However the rack shall generally comply with the material and construction indicated in drawing no. 2 180 005 4582 enclosed with the specification. The dimension shall be as given below:-

Type A : 2000 mm (w) X 650 mm (deep) X 2150 mm high.
Type B : 1500 mm (w) X 650 mm (deep) X 2150 mm high.
Type C : 1050 mm (w) X 650 mm (deep) X 1500 mm high.

The above dimensions are only indicative and the exact dimensions shall be as finalized during detailed engineering stage without any price repercussions.

4.2 The instrument racks shall be reinforced as required to ensure and to provide adequate support for instruments a equipment mounted therein. Center posts or any member which would reduce access shall not be provided.

4.3 The continuous canopy extension beyond the ends of the rack shall be Constructed of not less than 3mm thick steel.

4.4 Bulk head, specially designed to provide isolation from process line vibration Shall be installed on instrument racks to meet the process sensing line connection requirement.

COPYRIGHT AND CONFIDENTIAL
The information on this document is the property of BHARAT HEAVY ELECTRICALS LIMITED .
It must not be used directly or indirectly in any way detrimental to the interest of the company.

4.5 The internal layout and bulk head termination of the instrument rack shall be so arranged that all process impulse piping including blow down lines etc. run in one end of the racks and the transmitters etc are mounted in other end. This shall ensure that impulse piping/blow down lines is accessible from back side of the racks and the transmitters etc. are accessible from the front side for easy maintenance.

4.6 Each & every section of Rack shall have grounding terminal facility. Each Ground point shall be readily accessible for removal, testing & replacement. All panels and cabinets shall be provided with a continuous GI ground bus of minimum 6m x 25m cross-section. The ground bus shall be bolted to the structure and effectively ground the entire structure.

4.7 Each ground bus shall have provision-at each end for connection of ground Leads (6m x 25m GI flats) by suitable bolting. Each circuit requiring grounding shall be individually and directly connected to the Racks ground bus by ring tongue type compressible lugs.

4. 8 NAME PLATES

4.8.1 Laminated Phenolic name plates shall be provided on all instruments and devices mounted on the Racks except where the instruments or devices are themselves provided with a service engraving at front. Nameplates engraving shall be as shown on the specification drawings and the Racks mounted devices lists included, with these specifications and shall be submitted to the BHEL for approval during detailed engineering stage. Phenolic nameplates shall be attached to the Racks with stainless steel pan head screws. Size of the name plate shall be indicated later.

4.8.2 Nameplates labels and Tag No's shall be in accordance with the Annexure-1 for the respective project.

4.9 All Cabling & electrical field construction shall conform to BHEL approved detail engineering drawings & documents and the latest edition of the relevant VDE, IS, ANSI, ASTM, IEC, NEMA, IEEE, SEN, standards & guidelines. National Electrical Code 1987 as well as other applicable standards and regulations. The contractor shall furnish all material and services required for the completeness of the work identified in this scope as per this specification..

4.10 Suitable rubber pads of 15 mm shall be provided for Vibration isolation.

4.11 Illumination & Power Receptacles:-

4.11.1 All racks interiors shall be illuminated with rapid start fluorescent strip Fixtures rated 40 watt, 240V, single phase 50Hz with guards installed In a continuous row along with racks. All illuminating lights shall be Provided with individual switch

4.11.2 Adequate number of 240'V 15 amps AC power receptacles outlet with disconnect switches shall be installed within Racks such that no point along

the length of Racks shall be more than 2 meters from an outlet. These shall serve for power tools, portable hand lamp and other similar equipment.

4.12. POWER SUPPLY

4.12.1 Unregulated 240V, single phase, 50 Hz power supply for illuminations shall be utilized.

5.0 EQUIPMENT INSTALLATION

5.1 Racks shall be provided to mount the No. of transmitters as per the **variant table** with the associated equipment such as valve manifolds, valves, fittings, pipe tubing etc.(As per applicable instrument installation diagrams). The vendor shall prepare the piping drawings and the general arrangement layout drawings for each of the Racks, these drawings shall indicate the vendor piping arrangement etc. Special attention shall be given in the piping layout to avoid air traps in liquid filled piping or water pockets in piping intended to be dry. Drawings shall indicate the arrangement of all equipment, piping, valves and fittings within the racks and shall be subject to approval.

5.2 Transmitters shall be installed using custom fabricated ports which are attached to the vertical members provided for this purpose. Custom construction shall comply with the mounting recommendation of BHEL. Brackets, clamps and other supports, furnished with the instruments may be employed in the construction of supports. Painting of custom fabrication shall conform to the requirements for rack interiors.

6.0 INSTRUMENT PIPING

6.1 Instrument racks shall be furnished complete with valves, & fittings instrument piping from rack bulkhead connection to all instruments and necessary drain connections as indicated in the instrument installation diagrams in Drg. No. 2 180 005 4582. The components coming in the Rack shall be subject to approval during detailed engineering stage. The components shall be sourced as per the vendor list at clause no.

6.2 Individual instrument piping/tubing blow down piping and valves shall be furnished. Only the blow down header shall be shared within the rack.

6.3 Bulkhead connections shall be used where instruments piping enters the racks. (For instrument lines which enter through the bottom of the enclosure, the primary process line from the instrument valve shall be neatly installed, anchored and terminated at approximately 150 millimeters above the floor of the enclosure). The enclosure shall have a removable, gasketed floor plate which will be field modified to provide an effective seal around the incoming field primary process line. The supporting angle shall be of the same material as the enclosure frame.

COPYRIGHT AND CONFIDENTIAL
The information on this document is the property of BHARAT HEAVY ELECTRICALS LIMITED .
It must not be used directly or indirectly in any way detrimental to the interest of the company.

COPYRIGHT AND CONFIDENTIAL
The information on this document is the property of BHARAT HEAVY ELECTRICALS LIMITED .
It must not be used directly or indirectly in any way detrimental to the interest of the company.

6.4 All liquid filled blows down lines, **except those measuring vacuum** shall be Connected to a two inch header which is extended through one end of the LIR and turned downward. The material of the blow down header shall be carbon steel as per ASTM A 106 Gr.C. The blow down header shall have the ANSI pressure & temperature rating suitable for the application. However, in any case the blow down header shall not be less than schedule 80 pipes. Gas filled line and lines equipped with drain pots shall not be connected to the blow down header.

6.5 Pipe and stainless steel tube welding shall comply with the provisions of the latest application ANSI Code for Pressure Piping.

6.6 Various test connections shall be conveniently located for in place for calibration of various instruments.

6.7 The vendor shall submit to the BHEL with his proposal a copy of his welding procedure, specification together with proof of his compliance with the latest applicable welding code. Prior to any welding being performed, the contractor shall submit the qualifications of the craftsman who will perform the work.

6.8 Instruments piping and tubing shall be hydrostatically tested at one-half times maximum design pressure of the main process pipe system pressure for that instrument. However, for low pressure and vacuum measurement minimum pipe thickness used shall be of sch. 80.

7.0 JUNCTION BOXES FOR ENCLOSURES

7.1 A junction box as per IP 65 protection class for the termination of the wiring shall be provided for each of the instrument enclosure.

7.2 Junction boxes for modular enclosures shall be fabricated externally on one end of each enclosure assembly to accept field wiring through the top/bottom of the junction box. The junction box shall be minimum 200 mm wide. The height and depth of the junction box shall be same as that of the corresponding enclosure. Required gromets and sealing arrangements etc., shall be provided for cable entry from the enclosure/racks to the junction box such that the junction box is properly sealed and isolated from the enclosures. Further the junction box shall be provided with front access door. These doors shall have concealed handless and locking arrangement. The key for junction box door shall be same as that for the enclosures.

7.3 JUNCTION BOXES FOR RACKS.

7.3a The junction box shall comprise of a case and cover/door constructed from cold rolled sheet steel of thickness not less than 2 mm. The construction shall ensure adequate strength and rigidity. Junction boxes and pull boxes shall be hot dipped galvanized and confirm to IP 55 enclosure class as per IS. -2147.

COPYRIGHT AND CONFIDENTIAL
The information on this document is the property of BHARAT HEAVY ELECTRICALS LIMITED .
It must not be used directly or indirectly in any way detrimental to the interest of the company.

7.4 a) The junction boxes shall also meet the following minimum requirements: Junction boxes shall be provided with lockable door on the front side. The locks of the junction boxes shall be identical and operable by one key. Top of the boxes shall be arranged to -slope towards rear of the box. Junction box shall have a gland plate of 3.0mm sheet steel at bottom with neoprene/synthetic gasket lining.

b) All the junction boxes shall be suitable for mounting on racks. The brackets, bolts, nuts, screws, glands and lugs required for erection shall be included in Bidder's scope of supply.

c) A M6 enriching stud shall be provided in the junction box.

d) Terminal blocks shall be properly arranged inside the junction boxes to facilitate easy termination of cables.

e] The exact size and dimensions of junction boxes shall be as decided during detailed engineering. The same shall be subject to BHEL approval.

f) The Bidder shall furnish general arrangement cross sectional details of junction boxes and the same shall be subject to BHEL approval during detailed engineering stage.

8.0 TERMINAL BLOCKS

All terminal block shall be, rail mounted, Cage clamp type with high quality non-flammable insulating material suitable for working temperature of 130 deg C. These terminal blocks shall be suitable for plug-in type connections at both the ends. The exact type of Cage clamp terminal blocks to be provided by the Bidder and the technical details of the same including width etc. shall be subject to BHEL approval.

All the terminal blocks shall be provided complete with all required accessories including assembly rail, locking pin and section, end brackets, partitions, small partitions, test plug bolts transparent covers, support brackets, distance sleeves, screws, washers warning label, marking etc.

The marking on terminal strips shall corresponds numbering on wiring diagrams. At least 20% spare shall be provided, for each of the Junction Boxes all terminal blocks to the terminal unused terminals distributed over all terminal blocks.

All terminal blocks shall be numbered for identification and grouped according to the function. Engraved white-on-black labels shall be provided on terminal blocks.

The terminal blocks shall be arranged with at least 100 mm clearance between two sets of terminal blocks and between terminal blocks and junction box walls. For ensuring proper connections, Bidder shall provide suitable lugs/adopter terminals, boot lace ferrules etc. along with insulation sleeves. The exact connecting accessory i.e. adopter terminal or lugs or boot lace ferrules, etc. to be provided for a particular application

COPYRIGHT AND CONFIDENTIAL
The information on this document is the property of BHARAT HEAVY ELECTRICALS LIMITED .
It must not be used directly or indirectly in any way detrimental to the interest of the company.

shall be finalized during detailed engineering stage subject to BHEL approval without any cost repercussions.

9.0 MATERIAL OF FITTINGS/FIXTURES

The material of all fittings/fixtures and other mounting hardware like brackets channel guides, adaptors rack handle grips, name plates and other accessories which will be housed in the various enclosures shall be of non-flammable grade as per BHEL approved standard.

10.0 DRAWING AND DATASHEETS

10.1 The Bidder shall prepare and furnish all drawings/data sheets, technical literatures etc. as per the following:-.

10.2 PHYSICAL DRAWINGS

10.2.1 Rack dimensions, outline drawings showing plan, elevation, and views and covering weight data.

10.2.2 Installation and mounting details, location of cables entries.

10.2.3 General arrangement drawing showing location of all instruments and devices mounted on and within the enclosures/racks with proper identification of all instruments and devices etc.

10.2.4 Detailed drawings showing the location of terminal blocks and other accessories mounted within the enclosure/racks with proper identification for all instruments/devices etc.

10.2.5 Racks construction details and fabrication drawings.

10.2.6 Transmitter enclosure rack piping and tubing details, bill of material.

10.2.7 Device identification sheets including name plate/etched plate.

10.2.8 Complete Bill of Material for all enclosure/rack mounted devices along with their technical details and literatures.

11.0 ELECTRICAL DRAWINGS

11.1 Electrical drawings shall employ standard symbols.

11.2 The electrical drawing to be prepared and furnished by Bidder shall include the following:

11.2.1 Schematic diagram

11.2.2 Power supply distribution single line diagram.

11.2.3 Internal rack wiring diagrams.

11.2.4 Cable interconnection diagram for all cables one end of which is connected to the equipment under Bidder's scope.

COPYRIGHT AND CONFIDENTIAL
The information on this document is the property of BHARAT HEAVY ELECTRICALS LIMITED .
It must not be used directly or indirectly in any way detrimental to the interest of the company.

11.3 Internal wiring diagram shall be furnished for enclosures/racks a specified in each component, shall be shown in true physical relationship to all of the other components. All wiring between components shall be shown. The internal wiring of each component shall be shown. For identical components, the internal wiring need be shown only once with proper reference made to this wiring for other identical components. All terminal blocks and spare contacts shall be shown.

12.0 SHOP AND SITE TESTS

12.1.1 All enclosures/racks furnished as per this subsection shall be factory tested under various stages of manufacture and upon completion as per BHEL approved Quality Assurance Plan. These tests shall include but not be limited to the following:

12.1.2 a) Paint shade thickness
b] Alignment of section
c] Component ratings
d] Wiring
e] IR
f] HV
g] Accessibility of TBs/ Devices
h] Illumination
I] Hydro test
J] IP Test

Note:- Enclosure type test shall be conducted specifically for this project on one sample JB for LIR.

12.2 Sub vendor components shall be subjected to inspection by BHEL as indicated in the vendor list

12.3 OTHER TESTS SHALL INCLUDE

12.3.1 High voltage test and insulation measurement before and after high voltage test.

12.3.2 Tests for ensuring compliance with construction, painting and other requirements.

12.3.3 The authorized personnel of the BHEL shall be free to visit the manufacturing work of the Contractor/ sub-contractor for the purpose of examining the equipment to ensure that the material processes and testing conform to the requirements of this specification and the work is progressing at a proper rate to meet the delivery schedule and other milestones.

13.0 The racks general arrangement drawings enclosures herewith are preliminary drawings subject to revision by the BHEL during detailed engineering. The Bidder shall furnish all Racks as per general arrangement drawings finalized/approved by the owner during detail engineering. No adjustments in the contract price of Racks shall be applicable in the following cases:

13.01 Change in GA drawings of the enclosure without any change in over all dimensions.

13.02 Increase or decrease in number of instruments and devices mounted on racks provided the dimensions of the panel rack remain unchanged.

13.03 Change in overall dimension and wiring details of instruments devices mounted on within the racks.

14.0 Vendor shall generally follow the check list enclosed for Impulse pipes/Tubes, copper tubing, Air Filter regulator, Isolating valves Quality Assurance Plan shall be furnished for all the components as per enclosed format.

15.0 GA drawing and Quality Plan shall be approved by BHEL

16.0 Vendor shall furnish a deviation list including all the deviations invariably. Deviations not appearing in the deviation list will not be taken cognizance of.

17.0 DEVIATIONS: -

Deviations to the specifications if any shall be clearly indicated by the suppliers under the heading "Deviations to specification" referring specification clause & sub clause. BHEL have the right to reject the offer of suppliers based on the deviations indicated in their offer.

If no deviation is list is furnished in the offer it shall be infurred that the supplier is complying all requirements of the specifications. No deviations to technical requirements like make range and scope of supply will be entertained after the placement of order.

COPYRIGHT AND CONFIDENTIAL
The information on this document is the property of BHARAT HEAVY ELECTRICALS LIMITED .
It must not be used directly or indirectly in any way detrimental to the interest of the company.

HOOK UP LINES – X = LINES FOR BP SUC/BFP SUC & CEP DISCH
Y = LINES FOR BFP DISCHARGE PRESSURE
Z = LINES FOR DIFF.PRESSURE

17.0 **VARIANTS TABLE**

Var No.	Type of Rack	No. of hook up lines to be installed	Range of instruments to be mounted (Qty. same as column-3)	Matl. Code	Projects
1	2	3	4	5	6
01	TYPE-B	Z - 6 NOS	BY BHEL	FP9760167018	K'GAON PH-I&II SIPAT ST-II
02	TYPE-A	X – 6 NOS Z – 3 NOS		FP9760167026	
03	TYPE-A	X – 2 NOS Y – 2 NOS Z – 4 NOS	PT : 0 – 40 KG/CMSQ PT :0 – 250 KG/CMSQ DPT : 0 – 6400 MM WC	FP9760167034	BELLARY (TD BFPS)
04	TYPE-C	X – 1 NOS Y – 1 NOS Z – 2 NOS	PT : 0 – 40 KG/CMSQ PT :0 – 250 KG/CMSQ DPT : 0 – 6400 MM WC	FP9760167042	BELLARY (MD BFP)
05	TYPE-C	Z – 3 NOS	DPT : 0 – 3200 MM WC	FP9760167050	BELLARY (CEP)
06	TYPE-A	X – 9 NOS	PT : 0 – 40 KG/CMSQ	FP9760167069	BELLARY (CEP)
07	TYPE-B	X – 2 NOS Y – 2 NOS Z – 2 NOS	PT : 0 – 40 KG/CMSQ PT :0 – 250 KG/CMSQ DPT : 0 – 6400 MM WC	FP9760167077	PARLI & PARAS (BFPS)
08	TYPE-A	X – 4 NOS Z – 2 NOS	PT : 0 – 40 KG/CMSQ DPT : 0 – 3200 MM WC	FP9760167085	PARLI, PARAS, LEHRA, KORBA EAST, GIRAL, JINDAL SS (CEPS)
09	TYPE-A	X – 3 NOS Y – 3 NOS Z – 3 NOS	PT : 0 – 40 KG/CMSQ PT : 0 – 250 KG/CMSQ DPT : 0 –6400 MMWC	FP9760167093	LEHRA 3&4 (BFPS)

COPYRIGHT AND CONFIDENTIAL
The information on this document is the property of BHARAT HEAVY ELECTRICALS LIMITED .
It must not be used directly or indirectly in any way detrimental to the interest of the company.

Var No.	Type of Rack	No. of hook up lines to be installed	Range of instruments to be mounted	Matl. Code	Projects
10	TYPE-A	X – 6 NOS	PT : 0 – 10 KG/CMSQ-3Nos.	FP9760167107	AP GENCO, BAKRESWAR, MEJIA 5&6
			PT : 0 – 40 KG/CMSQ-3Nos.		
		Y – 3 NOS	PT :0 – 250 KG/CMSQ		
11	TYPE-A	X – 4 NOS	PT : 0 – 10 KG/CMSQ-2Nos.	FP9760167115	GIRAL(BFPS) JINDAL SS (BFP)
			PT : 0 – 40 KG/CMSQ-2Nos.		
		Y – 2 NOS	PT : 0 – 250 KG/CMSQ		
		Z – 2 NOS	DPT : 0 – 6400 MMWC		
12	TYPE-C	Z – 3 NOS	DPT : 0 – 6400 MMWC	FP9760167123	AP GENCO, BAKRESWAR, MEJIA 5&6
13	TYPE-A	X – 6 NOS	PT : 0 – 10 KG/CMSQ-3Nos	FP9760167131	KOBRA EAST
			PT : 0 – 40 KG/CMSQ-3Nos.		
		Z – 3 NOS	DPT : 0 – 6400 MMWC		
14	TYPE-A	X – 6 NOS	PT : 0 – 40 KG/CMSQ	FP9760167140	BAKRESWAR 4&5, MEJIA 5&6
		Z – 3 NOS	DPT : 0 – 3200 MMWC		
15	TYPE-B	X – 3 NOS	BY BHEL	FP9760167158	SIPAT ST-II
		Y – 3 NOS			
16	TYPE-A	X - 9 NOS	PT : 0 – 10 KG/CMSQ-3Nos	FP9760167166	BHILAI 2x250MW
			PT : 0 – 40 KG/CMSQ-6Nos.		
17	TYPE-A	Y – 3 NOS	PT : 0 –250 KG/CMSQ-3Nos.	FP9760167174	BHILAI 2x250MW
		Z – 3 NOS	DPT : 0 – 6400 MMWC-3Nos		
18	TYPE-B	Z – 6 NOS	DPT: 6400 MMWC	FP9760167182	KORBA 500 MW
19	TYPE-A	X – 6 NOS	PT : 0 – 40 KG/CMSQ.	FP9760167190	KORBA 500 MW
		Z – 3 NOS	DPT : 0 – 3200 MMWC		

COPYRIGHT AND CONFIDENTIAL
The information on this document is the property of BHARAT HEAVY ELECTRICALS LIMITED .
It must not be used directly or indirectly in any way detrimental to the interest of the company.

Var No.	Type of Rack	No. of hook up lines to be installed	Range of instruments to be mounted	Matl. Code	Projects
20	Type-A	X-6 Nos	PT: 0-10KG/CM^2- 2 Nos.	FP9760167204	NALCO DAMANJODI (BFPs)
			PT: 0-40KG/CM^2- 4 Nos.		
		Y-2 Nos	PT: 0-250KG/CM^2- 2 Nos.		
		Z-2 Nos	DPT: 0-6400MMWC-2 Nos		
21	Type- B	X-4 Nos.	PT: 0-10KG/CM^2-1 No.	FP9760167212	NEC KOSTI SUDAN (BFP)
			PT: 0-40KG/CM^2-3 Nos.		
		Y -1 No.	PT: 0-250KG/CM^2-1 No.		
		Z- 1 No.	DPT: 0-6400MMWC-1 No.		
		Y- 3 Nos.	PT: 0-250KG/CM^2		
22	Type- A	X- 3 Nos.	PT: 0-40KG/CM^2	FP9760167220	ARAVALI ENNORE SIMHADRI (BFP)
		Z-6 Nos.	DPT: 0-6400MMWC		
23	Type- C	Z- 2 Nos.	DPT: 0-6400MMWC-2 Nos	FP9760167239	ARAVALI ENNORE SIMHADRI (BFP)
		Z- 2 Nos.	DPT: 0.13-1.3kg/sq.cm-2Nos		
24	Type- A	Z- 4 Nos.	DPT: 0-6400MMWC-4 Nos	FP9760167247	ARAVALI ENNORE SIMHADRI (BFP)
		Z- 4 Nos.	DPT: 0.13-1.3kg/sq. cm-4Nos		
25	TYPE-A	X – 4 NOS	PT : 0 – 60 KG/CMSQ	FP9760167255	PRAGATI BAVANA (CEPs)
		Z – 2 NOS	DPT : 0 – 3200 MM WC		
26	TYPE-A	X – 4 NOS	PT: 0-40 KG/CM^2- 4 Nos.	FP9760167263	IISCO BURNPUR 1 NO/2 BFPs
		Y- 2 Nos	PT: 0-250KG/CM^2- 2 Nos.		
		Z- 2 Nos	DPT: 0-6400MMWC-2 Nos		
27	TYPE-A	X – 3 Nos	PT: 0-40 KG/CM^2- 3Nos.	FP9760167271	500 MW TPS
		Y- 1 Nos	PT: 0-250KG/CM^2- 1 Nos.		
		Z- 2 Nos	DPT: 0-6400MMWC-2 Nos		
28	TYPE-A	Y – 3 NOS	PT : 0 – 40 KG/CMSQ-3Nos.	FP9760167280	KBUNL Muzaffurpur 2x195 MW
		Z – 3 NOS	DPT : 0 – 6400 MMWC-3Nos		

COPYRIGHT AND CONFIDENTIAL
The information on this document is the property of BHARAT HEAVY ELECTRICALS LIMITED .
It must not be used directly or indirectly in any way detrimental to the interest of the company.

Var No.	Type of Rack	No. of hook up lines to be installed	Range of instruments to be mounted	Matl. Code	Projects
29	TYPE-B	X – 2 NOS	PT : 0 – 40 KG/CMSQ.	FP9760167298	BARA LALITPUR 660MW (FOR ALL NON NTPC PROJECTS)
		Y – 1NOS	PT : 0 – 400 KG/CMSQ		
		Z – 2 NOS	DPT : 0 – 6400 MMWC		
30	TYPE-B	X – 6 NOS	PT : 0 – 40 KG/CMSQ.	FP9760167301	3 NO's CEP DISCHARGE PRESSURE
31	TYPE-A	X – 5 NOS	PT : 0 – 40 KG/CMSQ.	FP9760167310	SINGARENI 660MW
		Y – 2 NOS	PT : 0 – 250 KG/CMSQ		
		Z – 2 NOS	DPT : 0 – 6400 MMWC		
32	TYPE-B	X – 6 NOS	PT : 0 – 60 KG/CMSQ.	FP9760167328	3 NO's CEP
33	TYPE-A	X – 2 NOS	PT : 0 – 60 KG/CMSQ.	FP9760167336	800MW, BFP FW & SW
		Y – 1NOS	PT : 0 – 400 KG/CMSQ		
		Z – 5 NOS	DPT : 0 – 6400 MMWC		
34	TYPE-A	X – 2 NOS	PT : 0 – 40 KG/CM^2 - 01 No	FP9760167344	MOUDA 660 MW
			PT : 0 – 60 KG/CM^2 – 01 No		
		Y – 1NOS	PT : 0 – 400 KG/CM^2		
		Z – 2 NOS	DPT : 0 – 6400 MMWC		
35	TYPE-A	X – 4 NOS	PT: 0 – 60 KG/CMSQ.	FP9760167352	LIR ASSEMBLY BFP,MDG455(1 no per BFP) - VAR NO:35
		Y – 1NOS	PT : 0 – 400 KG/CMSQ		
		Z – 5 NOS	DPT : 0 – 6400 MMWC		
36	TYPE-A	X – 9 NOS	PT: 0 – 40 KG/CMSQ.	FP9760167360	LIR ASSEMBLY CEP,144RND(1 no for 3 CEPs) - VAR NO:36
		Y – 3 NOS	DPT : 0 – 3200 MMWC		

COPYRIGHT AND CONFIDENTIAL
The information on this document is the property of BHARAT HEAVY ELECTRICALS LIMITED .
It must not be used directly or indirectly in any way detrimental to the interest of the company.

COPYRIGHT AND CONFIDENTIAL
The information on this document is the property of BHARAT HEAVY ELECTRICALS LIMITED .
It must not be used directly or indirectly in any way detrimental to the interest of the company.

Var No.	Type of Rack	No. of hook up lines to be installed	Range of instruments to be mounted	Matl. Code	Projects
37	TYPE-A	X – 6 NOS	PT: 0 – 40 KG/CMSQ.	FP9760167379	LIR ASSEMBLY DRIP PUMP(1 no for 2 Drip pump) - VAR NO:37
		Y – 2 NOS	DPT : 0 – 3200 MMWC		
38	TYPE-B	X – 3 NOS	PT : 0 – 40 KG/CMSQ.	FP9760167387	LIR VAR NO 38
		Y – 3 NOS	PT : 0 – 400 KG/CMSQ		
		X – 1NOS	PT: 0 – 60 KG/CMSQ.		
		Z – 6 NOS	DPT : 0 – 6400 MMWC		
39	TYPE-A	X – 4 Nos	PT : 0 – 40 KG/CM² - 01 No	FP9760167395	LIR ASSEMBLY BFP FW, MDG406 Sagardighi (1 no per BFP)-VAR NO:39
			PT : 0 – 60 KG/CM² - 03 Nos		
		Y – 1Nos	PT : 0 – 400 KG/CM²		
		Z – 2 Nos	DPT : 0 – 6400 MMWC		
40	TYPE-C	Z- 2 Nos.	DPT: 0 - 6400MMWC	FP9760167409	LIR ASSEMBLY BFP SW & CW, MDG406-Sagardighi (1 no per BFP) -VAR NO:40
		Z- 2 Nos.	DPT: 0.13 - 1.3 KG/CM²		
41	TYPE-A	X – 9 Nos	PT: 0 – 60 KG/CM²	FP9760167417	LIR ASSEMBLY CEP (1 no for 3 CEP'S discharge pressures) - VAR NO:41
42	TYPE-A	X – 3 Nos	PT: 0 – 16 KG/CM²	FP9760167425	LIR ASSEMBLY CEP (1no for 3 CEP'S Gland sealing & Strainer DPT) - VAR NO:42
		Z – 3 Nos	DPT : 0 – 3200 MMWC		
43	TYPE-A	X – 6 NOS	PT: 0 – 60 KG/CMSQ.	FP9760167433	LIR ASSEMBLY FOR 3 CEPs
		Y – 3 NOS	DPT : 0 – 3200 MMC		
44	TYPE-A	X – 2 NOS	PT: 0 – 60 KG/CMSQ.	FP9760167441	LIR ASSEMBLY MDBFP
		Y – 1 NOS	PT : 0 – 400 KG/CMSQ		
		Z - 2 NOS	DPT: 0 - 3200MMWC		
		Z - 4 NOS	DPT: 0 - 6400MMWC		
45	TYPE-A	X – 2 NOS	PT: 0 – 60 KG/CMSQ.	FP9760167450	LIR ASSEMBLY TDBFP
		Y – 1 NOS	PT : 0 – 400 KG/CMSQ		
		Z - 2 NOS	DPT: 0 - 3200MMWC		
		Z - 3 NOS	DPT: 0 - 6400MMWC		
46	TYPE-C	Z - 2 NOS	DPT: 0 - 3200MMWC	FP9760167468	LIR ASSEMBLY FOR 2 DRIP PUMPs

COPYRIGHT AND CONFIDENTIAL
The information on this document is the property of BHARAT HEAVY ELECTRICALS LIMITED .
It must not be used directly or indirectly in any way detrimental to the interest of the company.

NOTE: 1. ACCURACY OF INSTRUMENTS FOR VAR NO'S 05, 32 &38 SHALL BE +/- 0.04%.
This accuracy value supersedes the value in specification TC55817.

2. INSTRUMENTS VENDORS FOR VAR. 18, 19, 22 to 24 shall be as per SL. No. 'H'.

3. Accuracy of PT for Var. No's 39, 41 & 42, SHALL BE +/- 0.075% of Span or better & This accuracy value supersedes the value in specification TC55817.

4. Accuracy of PT for Var. No's 43 TO 46 SHALL BE ± 0.04% of Span or better, For DPT: ± 0.025 % of calibrated span or better, Repeatability: ± 0.05% of Span or better, IP-65 (Explosion proof for NEC Class-1, Division 1 area)
& This value may supersedes the value in specification TC55817

NOTE TO VENDOR:- All transmitters including DPTS electrical connection shall be supplied with **PLUG AND SOCKET** type.

LIST OF VENDORS FOR INSTRUMENTS AND LIR COMPONENTS

A. Impulse pipes/tubes
01. Sumitomo, Japan
02. Manessman, Germany
03. TPS Technitube, Germany
04. Trouvay & Cauvin, France
05. ISMT, Ahmedanagar (only for carbon steel pipes)
06. Maharashtra seamless, Delhi (only for carbon steel pipes)
07. BHEL, Trichy

B. Socket weld fitting
01. Vikas, Delhi
02. Excel Hydro, Mumbai
03. HP valves & fittings, Chennai

C. Compression fittings
01. Precision, Mumbai
02. Swagelock, USA
03. Excel Hydro, Mumbai (with ferrules hardened at eximp holland for 9000 psi rated fittings)
04. HP valves & fittings, Chennai

D. Instrument Valves
01. IL, Palghat
02. BHEL, Trichy
03. Excel Hydro, Mumbai
04. Precision Engg Industry Mumbai
05. HP valves & fittings, Chennai

E. Valve manifolds
01. Schneider, Germany
02. Excel hydro, Mumbai
03. Anderson greenwood, UK

04. Precision Engg Industry Mumbai
05. HP valves & fittings, Chennai

F. Cage clamp type terminals used in juction box:
01. Phoenix
02. Wago
03. Connectwell industries pvt ltd, Dombivli-421204

G. Pr. & Diff. pr. transimitters:
01. ABB instrumentation, Faridabad or ITALY**(2600T MODEL)**
02. Emerson process management, Mumbai
03. Yokogowa blue star, Banglore
04. Tata Honey Well, Pune
05. Thermax Fuji Electric (P) Ltd.

H. Pr. & Diff. pr. transimitters:(For VAR NO.18 & 19)
01. ABB instrumentation, Faridabad or ITALY **(2600T MODEL)**
02. Emerson, Daman
03. Yokogawa, Japan (Calibration at Bangalore Acceptable)
04. Fuji, Japan

RECORD OF REVISIONS

Rev. No.	Date	Revision Details	Revised By	Approved By
01	07.05.05	Specification revised to include Transmitters	MMR	BRK
02	06.08.05	Var. No. 15 added.	S. SAHU	BRK
03	07.03.06	VAR. NO.16 & 17 added	MMR	BRK
04	01.06.06	CL.NO. 17.0 added. Sl.No.14 at sheet hook up line corrected from 'Y' to 'X'. Sl.No.G-01 required model No indicated	MMR	BRK
05	06.09.06	VAR NO. 18,19 & 20 added SL No. 'H' added at Vendors list for Var. No. 18 & 19. Additional vendor list revised at 'D', 'E', and 'G'.	MMR	BRK
06	07.06.2007	VAR NO. 21 added.	AVINASH	BRK
07	25.09.2008	VAR NO. 22,23&24 added. Type of transmitter connection added at "Note to Vendor" in page 12 of 14.	MMR	BRK
08	06.03.2009	VAR NO. 25 & 26 ADDED.	B.PRAKASH	BRK

COPYRIGHT AND CONFIDENTIAL
The information on this document is the property of BHARAT HEAVY ELECTRICALS LIMITED .
It must not be used directly or indirectly in any way detrimental to the interest of the company.

Ref. Doc

Rev. No.	Date	Revision Details	Revised By	Approved By
09	29.01.2010	VAR NO.27 ADDED & VENDOR LIST OF TRANSMITTERS CORRECTED (V.AUTOMATIC DELETED) VAR NO. 23&24 PR.UNIT IS CORRECTED.	D.K.GUPTA	BRK
10	23.03.2010	Transmitter specification updated (at page 1 0f 14). Transmitter model nos of each vendor attached for reference.	MMR	BRK
11	30.09.2011	HP valves & Fitting added In vender List at SL NO : B, C, D & E At Page 13	MMR	BRK
12	24.01.2012	Var No. 28 Added	B. PRAKASH	BRK
13	18.06.2012	Var No. 29 Added	MMR	BRK
14	27.06.2013	Var No. 30 to 33 Added	MMR	BRK
15	30.01.2014	Var No. 34 Added	MMR	BRK
16	21.08.2015	Var No. 35 to 37 Added	DK Gupta	PS
17	27.02.2018	Var No 38 Added	NVKS	AJK
18	21.04.2018	Instruments updated in Var No38	NVKS	AJK
19	16.05.2018	Note regarding Accuracy indicated for Var No's 05,32 &38.	NVKS	AJK
20	30.08.2022	For Sagardighi Var No's 39,40 & 41 added & Note 3 added below variant table regarding Accuracy of PT for Var No's 39 & 41.	V Kiran Kumar Reddy	Suresh Kumar
21	16.09.2023	For Sagardighi Var no.42 added & Note 3 edited below variant table regarding Accuracy of PT for Var No. 42. Number of instruments corrected Var.no. 41.	V Kiran Kumar Reddy	Suresh Kumar
22	07.05.2024	For ADANI 2 X800 MW Var no.43 to 46 added & Note 4 edited below variant table regarding Accuracy of PT/DPT for Var No. 43 to 46.Clause 3.2 painting clause as per Annexure IV is added for Adani proejct	KK	Suresh Kumar

COPYRIGHT AND CONFIDENTIAL
The information on this document is the property of BHARAT HEAVY ELECTRICALS LIMITED .
It must not be used directly or indirectly in any way detrimental to the interest of the company.

Ref. Doc

ANNEXURE IV
PAINTING SCHEME

Primer Coat: 1 coat of inorganic ethyl self curing zinc silicate primer (coating) at 75 microns DFT/Coat to be applied by airless/pressure pot. The primer should meet the requirements of IS - 14946 performance standard. Minimum Metallic Zinc in the dry film by weight must be 75%. Volume solids of the primer must be 60% .

Intermediate coat – 1 coat of High build epoxy MIO coating cured with polyamide hardener at 100 microns DFT/ Coat to be applied by airless spray. Minimum Natural Lamellar Micaceous Iron Oxide content in the dry film must be 50% by weight. Volume solids of the product must be 60% .

Finish Coat- One coat of High Build Gloss Aliphatic Acrylic Polyurethane at 50 micron/coat dry film thickness to be applied by brush/airless spray. Volume Solids of the product must be 62%.

Total DFT minimum: 225 Microns.

Notes:

1. This paint system is equivalent to the protective paint system no S4.30 recommended for corrosion category C-4- in ISO 12944-5.
2. This system is satisfactory for surface temperatures to 90° C continuous dry temperature.
3. Colour for final coat shall be as per colour code.
4. All material shall be supplied in the manufacturers original cans, durably & legibly marked with the description of the contents. This shall include the batch number, date of manufacturing & the manufacturer's name.
5. All coating materials used shall confirm to the composition clauses given against each product in the specification. In meeting the composition clauses, the manufacturer shall provide evidence of compliance from approved third party lab before start of the job & internal test report along with every supplied batch.
6. Material containing cadmium, lead or any other toxic material to environment/personnel shall not be used.

COPYRIGHT AND CONFIDENTIAL
The information on this document is the property of BHARAT HEAVY ELECTRICALS LIMITED,
It must not be used directly or indirectly in any way detrimental to the interest of the company.

TECHNICAL SPECIFICATION OF TRANSMITTERS RACK ASSEMBLY WITH INSTRUMENTS & TUBING MOUNTED (FOR NTPC PROJECTS)

The scope of supply includes: -

Transmitters Rack Assembly (TRA), components and instruments as per typical layout drawing no. 21800054582 and TC55817 (With Plug and connector type) (Spec for PTS & DPTS based on Hart control) and FP60348 (specs for PTS & DPTS based on Profibus control)
Mandatory spares of 2 way, 3 way & 5 way valve manifolds and instruments of each type, model & rating shall be supplied along with TRA, if specified in the enquiry.

1.0 All racks shall be fabricated complete with internal piping and fully wired and shall be provided with necessary provision for convenience outlets, internal lighting grounding, vibration pads and other accessories as per IS ; 5039-1969 as required for completeness. Instruments shall be mounted and wired with JBs. The name plates and terminal blocks shall be provided on as required basis for racks.(Name plate & tag nos details will be provided after placement of order)

1.1 No. of instruments to be mounted in TRA as per variant table/enquiry. The list of Vendors for instruments & TRA components as per vendor list indicated in this Spec. Each type of instruments/valves shall be procured from the same vendor against each order. Instruments shall be procured as per the enclosed specification TC55817/FP60348 (Weather Proof Pr. & Diff. Pr. Transmitters). Test requirements & guaranteed certificates as per the specification.

2.0 REFERENCE CODES

2.1 Racks, Panels and associated equipment EIA: - RS-310-C-1983 (ANSI C 83.9- 1972)

3.0 CONSTRUCTION FEATURES

All racks furnished as per specification shall be of free standing type and shall be constructed of specified gauge of steel plates.
The racks shall be reinforced as required to ensure true surfaces and adequate support for instruments mounted thereon. All mounting studs & support brackets shall be accurately located. All welds on the exposed panel surface shall be ground smooth. Finished panel surface shall be free from waves, bellies or other imperfections.
All rack shall have removable lifting eye bolls for safe lifting from top during storage and installation handling.
All racks shall be mounted on Rubber pads. A 2" NB pipe shall be provided for mounting transmitters in the Racks.

COPYRIGHT AND CONFIDENTIAL
The information on this document is the property of BHARAT HEAVY ELECTRICALS LIMITED .
It must not be used directly or indirectly in any way detrimental to the interest of the company.

4.0 SURFACE PREPARATION & PAINTING

Exposed raw metal edges shall be ground burr free. The entire rack surface shall be shot blasted/grid blasted to remove rust and scale and all other residue
Due to the fabrication operation. Oil grease and salts etc. shall be removed from the surface by one or more solvent cleaning methods.

Two spray coats of inhibitive epoxy primer-surface shall be applied to all exterior and interior surfaces. A minimum of two spray coats of final finish colour (catalyzed epoxy finish) shall be applied to all surfaces. The final finished thickness of paint film on steel shall not be less than 100 micron and more than 150 micron. The finish colors for exterior and interior surfaces shall conform to

a) Exterior : RAL 9002.

Paint films which show sags, checks, blisters, teardrops, fat edges or other imperfections shall not be acceptable and if any such defects appear they shall be repaired by at expense of the Bidder.

The Bidder shall furnish sufficient touch-up paint for one complete finish coat on all exterior factory painted surfaces of each item of equipment. The touch-up paint shall be of the same type and color as the factory applied paint and shall be carefully packed to avoid damage during shipment. Complete painting instructions shall be furnished.

5.0 TRANSMITTERS RACK ASSEMBLY

5.1 The Transmitters Rack Assembly shall be of free standing type constructed of suitable 5 mm thick channel frame of steel. The Instrument rack shall be provided with a canopy to protect equipment provided in racks from falling objects, water etc. The fabrication details of instrument racks shall be as finalized during detailed engineering stage. However the rack shall generally comply with the material and construction indicated in drawing no. 2 180 005 4582 enclosed with the specification. The dimension shall be as given below:-

Type A : 2000 mm (w) X 650 mm (deep) X 2150 mm high.
Type B : 1500 mm (w) X 650 mm (deep) X 2150 mm high.
Type C : 1050 mm (w) X 650 mm (deep) X 1500 mm high.
The above dimensions are only indicative and the exact dimensions shall be as finalized during detailed engineering stage without any price repercussions.

5.2 The instrument racks shall be reinforced as required to ensure and to provide adequate support for instruments and equipment mounted therein. Center posts or any member which would reduce access shall not be provided.

5.3 The continuous canopy extension beyond the ends of the rack shall be Constructed of not less than 3mm thick steel.

5.4 Bulk head, specially designed to provide isolation from process line vibration Shall be installed on instrument racks to meet the process sensing line connection requirement.

COPYRIGHT AND CONFIDENTIAL
The information on this document is the property of BHARAT HEAVY ELECTRICALS LIMITED .
It must not be used directly or indirectly in any way detrimental to the interest of the company.

5.5 The internal layout and bulk head termination of the instrument rack shall be so arranged that all process impulse piping including blow down lines etc. run in one end of the racks and the transmitters etc are mounted in other end. This shall ensure that impulse piping/blow down lines is accessible from back side of the racks and the transmitters etc. are accessible from the front side for easy maintenance.

5.6 Each & every section of Rack shall have grounding terminal facility. Each Ground point shall be readily accessible for removal, testing & replacement. All panels and cabinets shall be provided with a continuous GI ground bus of minimum 6m x 25m cross-section. The ground bus shall be bolted to the structure and effectively ground the entire structure.

5.7 Each ground bus shall have provision-at each end for connection of ground Leads (6m x 25m GI flats) by suitable bolting. Each circuit requiring grounding shall be individually and directly connected to the Racks ground bus by ring tongue type compressible lugs.

5. 8 NAME PLATES

5.8.1 Laminated Phenolic name plates shall be provided on all instruments and devices mounted on the Racks except where the instruments or devices are themselves provided with a service engraving at front. Nameplates engraving shall be as shown on the specification drawings and the Racks mounted devices lists included, with these specifications and shall be submitted to the BHEL for approval during detailed engineering stage. Phenolic nameplates shall be attached to the Racks with stainless steel pan head screws. Size of the name plate shall be indicated later.

5.8.2 Name plate & tag nos details will be provided after placement of order.

5.8.3 All Cabling & electrical field construction shall conform to BHEL approved detail engineering drawings & documents and the latest edition of the relevant VDE, IS, ANSI, ASTM, IEC, NEMA, IEEE, SEN, standards & guidelines. National Electrical Code 1987 as well as other applicable standards and regulations. The contractor shall furnish all material and services required for the completeness of the work identified in this scope as per this specification.

5.8.4 Suitable rubber pads of 15 mm shall be provided for Vibration isolation.

5.8.5 Illumination & Power Receptacles: -

5.8.6 All racks interiors shall be illuminated with rapid start fluorescent strip Fixtures rated 40 watts, 240V, single phase 50Hz with guards installed in a continuous row along with racks. All illuminating lights shall be provided with individual switch

5.8.7 Adequate number of 240'V 15 amps AC power receptacles outlet with disconnect switches shall be installed within Racks such that no point along the length of Racks shall be more than 2 meters from an outlet. These shall serve for power tools, portable hand lamp and other similar equipment.

5.8.8 POWER SUPPLY

5.8.9 Unregulated 240V, single phase, 50 Hz power supply for illuminations shall be utilized.

COPYRIGHT AND CONFIDENTIAL
The information on this document is the property of BHARAT HEAVY ELECTRICALS LIMITED .
It must not be used directly or indirectly in any way detrimental to the interest of the company.

6.0 EQUIPMENT INSTALLATION

6.1 Racks shall be provided to mount the No. of transmitters as per the **variant table** with the associated equipment such as valve manifolds, valves, fittings, pipe tubing etc. (As per applicable instrument installation diagrams). The vendor shall prepare the piping drawings and the general arrangement layout drawings for each of the Racks, these drawings shall indicate the vendor piping arrangement etc. Special attention shall be given in the piping layout to avoid air traps in liquid filled piping or water pockets in piping intended to be dry. Drawings shall indicate the arrangement of all equipment, piping, valves and fittings within the racks and shall be subject to approval.

6.2 Transmitters shall be installed using custom fabricated ports which are attached to the Vertical members provided for this purpose. Custom construction shall comply with the mounting recommendation of BHEL. Brackets, clamps and other supports to be furnished with the instruments may be employed in the construction of supports. Painting of custom fabrication shall conform to the requirements for rack interiors.

7.0 INSTRUMENT PIPING

7.1 Instrument racks shall be furnished complete with valves, & fittings instrument piping from rack bulkhead connection to all instruments and necessary drain connections as indicated in the instrument installation diagrams in Drg. No. 2 180 005 4582. The components coming in the Rack shall be subject to approval during detailed engineering stage. The components shall be sourced as per the vendor list at clause no.

7.2 Individual instrument piping/tubing blow down piping and valves shall be furnished. Only the blow down header shall be shared within the rack.

7.3 Bulkhead connections shall be used where instruments piping enters the racks. (For instrument lines which enter through the bottom of the enclosure, the primary process line from the instrument valve shall be neatly installed, anchored and terminated at approximately 150 millimeters above the floor of the enclosure). The enclosure shall have a removable, gasketed floor plate which will be field modified to provide an effective seal around the incoming field primary process line. The supporting angle shall be of the same material as the enclosure frame.

7.4 All liquid filled blows down lines, **except those measuring vacuum** shall be Connected to a two inch header which is extended through one end of the TRA and turned downward. The material of the blow down header shall be carbon steel as per ASTM A 106 Gr.C. The blow down header shall have the ANSI pressure & temperature rating suitable for the application. However, in any case the blow down header shall not be less than schedule 80 pipes. Gas filled line and lines equipped with drain pots shall not be connected to the blow down header.

7.5 Pipe and stainless steel tube welding shall comply with the provisions of the latest application ANSI Code for Pressure Piping.

7.6 Various test connections shall be conveniently located for in place for calibration of various instruments.

7.7 The vendor shall submit to the BHEL with his proposal a copy of' his welding procedure, specification together with proof of his compliance with the latest applicable welding code. Prior to any welding being performed, the contractor shall submit the qualifications of the craftsman who will perform the work.

7.8 Instruments piping and tubing shall be hydrostatically tested at one-half times maximum design pressure of the main process pipe system pressure for that instrument. However, for low pressure and vacuum measurement minimum pipe thickness used shall be of sch. 80.

8.0 JUNCTION BOXES FOR ENCLOSURES

8.1 A junction box as per IP 55 protection class for the termination of the wiring shall be provided for each of the instrument enclosure.

8.2 Junction boxes for modular enclosures shall be fabricated externally on one end of each enclosure assembly to accept field wiring through the top/bottom of the junction box. The junction box shall be minimum 200 mm wide. The height and depth of the junction box shall be same as that of the corresponding enclosure. Required grommets and sealing arrangements etc., shall be provided for cable entry from the enclosure/racks to the junction box such that the junction box is properly sealed and isolated from the enclosures. Further the junction box shall be provided with front access door. These doors shall have concealed handless and locking arrangement. The key for junction box door shall be same as that for the enclosures.

8.2 JUNCTION BOXES FOR RACKS.

8.3 The junction box shall comprise of a case and cover/door constructed from cold rolled sheet steel of thickness not less than 2 mm. The construction shall ensure adequate strength and rigidity. Junction boxes and pull boxes shall be hot dipped galvanized and confirm to IP 55 enclosure class as per IS. -2147.

8.4 a) The junction boxes shall also meet the following minimum requirements:
Junction boxes shall be provided with lockable door on the front side. The locks of the junction boxes shall be identical and operable by one key. Top of the boxes shall be arranged to -slope towards rear of the box. Junction box shall have a gland plate of 3.0mm sheet steel at bottom with neoprene/synthetic gasket lining.

b) All the junction boxes shall be suitable for mounting on racks. The brackets, bolts, nuts, screws, glands and lugs required for erection shall be included in Bidder's scope of supply.

c) A M6 enriching stud shall be provided in the junction box.

d) Terminal blocks shall be properly arranged inside the junction boxes to facilitate easy termination of cables.

e) The exact size and dimensions of junction boxes shall be as decided during detailed engineering. The same shall be subject to BHEL approval.

f) The Bidder shall furnish general arrangement cross sectional details of junction boxes and the same shall be subject to BHEL approval during detailed engineering stage.

8.5 Junction boxes are not required for Profibus based instruments as mentioned in Variant table Var 13,14,15 &16

COPYRIGHT AND CONFIDENTIAL
The information on this document is the property of BHARAT HEAVY ELECTRICALS LIMITED .
It must not be used directly or indirectly in any way detrimental to the interest of the company.

COPYRIGHT AND CONFIDENTIAL
The information on this document is the property of BHARAT HEAVY ELECTRICALS LIMITED .
It must not be used directly or indirectly in any way detrimental to the interest of the company.

9.0 TERMINAL BLOCKS

All terminal block shall be, rail mounted, Cage clamp type with high quality non-flammable insulating material suitable for working temperature of 130 deg C. These terminal blocks shall be suitable for plug-in type connections at both the ends. The exact type of Cage clamp terminal blocks to be provided by the Bidder and the technical details of the same including width etc. shall be subject to BHEL approval.

All the terminal blocks shall be provided complete with all required accessories including assembly rail, locking pin and section, end brackets, partitions, small partitions, test plug bolts transparent covers, support brackets, distance sleeves, screws, washers warning label, marking etc.

The marking on terminal strips shall corresponds numbering on wiring diagrams. At least 20% spare shall be provided, for each of the Junction Boxes all terminal blocks to the terminal unused terminals distributed over all terminal blocks.

All terminal blocks shall be numbered for identification and grouped according to the function. Engraved white-on-black labels shall be provided on terminal blocks.

The terminal blocks shall be arranged with at least 100 mm clearance between two sets of terminal blocks and between terminal blocks and junction box walls. For ensuring proper connections, Bidder shall provide suitable lugs/adopter terminals, boot lace ferrules etc. along with insulation sleeves. The exact connecting accessory i.e. adopter terminal or lugs or boot lace ferrules, etc. to be provided for a particular application shall be finalized during detailed engineering stage subject to BHEL approval without any cost repercussions.

10.0 MATERIAL OF FITTINGS/FIXTURES

The material of all fittings/fixtures and other mounting hardware like brackets channel guides, adaptors rack handle grips, name plates and other accessories which will be housed in the various enclosures shall be of non-flammable grade as per BHEL approved standard.

11.0 DRAWING AND DATASHEETS

11.1 The Bidder shall prepare and furnish all drawings/data sheets, technical literatures etc. as per the following: -.

11.2 PHYSICAL DRAWINGS

11.2.1 Rack dimensions, outline drawings showing plan, elevation, and views and covering weight data.

11.2.2 Installation and mounting details, location of cables entries.

11.2.3 General arrangement drawing showing location of all instruments and devices mounted on and within the enclosures/racks with proper identification of all instruments and devices etc.

COPYRIGHT AND CONFIDENTIAL
The information on this document is the property of BHARAT HEAVY ELECTRICALS LIMITED .
It must not be used directly or indirectly in any way detrimental to the interest of the company.

11.2.4 Detailed drawings showing the location of terminal blocks and other accessories mounted within the enclosure/racks with proper identification for all instruments/devices etc.
11.2.5 Racks construction details and fabrication drawings.
11.2.6 Transmitter enclosure rack piping and tubing details, bill of material.
11.2.7 Device identification sheets including name plate/etched plate.
11.2.8 Complete Bill of Material for all enclosure/rack mounted devices along with their technical details and literatures.

12.0 ELECTRICAL DRAWINGS

12.1 Electrical drawings shall employ standard symbols.
12.2 The electrical drawing to be prepared and furnished by Bidder shall include the following:
12.2.1 Schematic diagram
12.2.2 Power supply distribution single line diagram.
12.2.3 Internal rack wiring diagrams.
12.2.4 Cable interconnection diagram for all cables one end of which is connected to the equipment under Bidder's scope.
12.3 Internal wiring diagram shall be furnished for enclosures/racks a specified in each component, shall be shown in true physical relationship to all of the other components. All wiring between components shall be shown. The internal wiring of each component shall be shown. For identical components, the internal wiring need be shown only once with proper reference made to this wiring for other identical components. All terminal blocks and spare contacts shall be shown.

13.0 SHOP AND SITE TESTS

13.1.1 All enclosures/racks furnished as per this subsection shall be factory tested under various stages of manufacture and upon completion as per BHEL approved Quality Assurance Plan. These tests shall include but not be limited to the following:
13.1.2 a] Paint shade thickness
b] Alignment of section
c] Component ratings
d] Wiring
e] IR
f] HV
g] Accessibility of TBs/ Devices
h] Illumination
I] Hydro test
J] IP Test
Note: - Enclosure type test shall be conducted specifically for this project on one sample JB for TRA.
13.2 Sub vendor components shall be subjected to inspection by BHEL as indicated in the vendor list

COPYRIGHT AND CONFIDENTIAL
The information on this document is the property of BHARAT HEAVY ELECTRICALS LIMITED .
It must not be used directly or indirectly in any way detrimental to the interest of the company.

13.3 OTHER TESTS SHALL INCLUDE

13.3.1 High voltage test and insulation measurement before and after high voltage test.

13.3.2 Tests for ensuring compliance with construction, painting and other requirements.

13.3.3 The authorized personnel of the BHEL shall be free to visit the manufacturing work of the Contractor/ sub-contractor for the purpose of examining the equipment to ensure that the material processes and testing conform to the requirements of this specification and the work is progressing at a proper rate to meet the delivery schedule and other milestones.

14.0 The racks general arrangement drawings enclosures herewith are preliminary drawings subject to revision by the BHEL during detailed engineering. The Bidder shall furnish all Racks as per general arrangement drawings finalized/approved by the owner during detail engineering. No adjustments in the contract price of Racks shall be applicable in the following cases:

14.1 Change in GA drawings of the enclosure without any change in over all Dimensions.

14.2 Increase or decrease in number of instruments and devices mounted on racks provided the dimensions of the panel rack remain unchanged.

14.3 Change in overall dimension and wiring details of instruments devices mounted on within the racks.

15.0 Vendor shall generally follow the check list enclosed for Impulse pipes/Tubes, copper tubing, Air Filter regulator, isolating valves Quality Assurance Plan shall be furnished for all the components as per enclosed format.

16.0 GA drawing and Quality Plan shall be approved by BHEL

17.0 Vendor shall furnish a deviation list including all the deviations invariably. Deviations not appearing in the deviation list will not be taken cognizance of.

18.0 DEVIATIONS: -

Deviations to the specifications if any shall be clearly indicated by the suppliers under the heading "Deviations to specification" referring specification clause & sub clause. BHEL have the right to reject the offer of suppliers based on the deviations indicated in their offer.

If no deviation list is furnished in the offer it shall be in furred that the supplier is complying all requirements of the specifications. No deviations to technical requirements like make range and scope of supply will be entertained after the placement of order.

HOOK UP LINES – X = LINES FOR BP SUC/BFP SUC & CEP DISCH
Y = LINES FOR BFP DISCHARGE PRESSURE
Z = LINES FOR DIFF.PRESSURE

19.0 Packing shall be seaworthy

20.0 VARIANTS TABLE

Var No.	Type of Rack	No. of hook up lines to be installed	Range of instruments to be mounted (Qty. same as column-3)	Matl. Code	Projects
1	2	3	4	5	6
01	TYPE-C	Z – 3 Nos	DPT : 0 – 3200 mmwc	FP9760261014	MOUDA 660 MW (CEP)
02	TYPE-B	X – 6 Nos	PT: 0 – 60 kg/cm^2.	FP9760261022	MOUDA 660 MW (CEP)
03	TYPE-A	X – 2 Nos	PT: 0 – 40 kg/cm^2.- 01 No	FP9760261030	MOUDA 660 MW
			PT: 0 – 60 kg/cm^2.– 01 No		
		Y – 1Nos	PT: 0 – 400 kg/cm^2.		
		Z – 2 Nos	DPT : 0 – 6400 mmwc		
04	TYPE-A	X - 3 Nos.	PT: 0-40 kg/cm2.	FP9760261049	UNCHAHAAR (BFP)
		Z - 6 Nos.	DPT: 0-6400 mmwc		
05	TYPE-C	Z - 2 Nos.	DPT: 0-6400 mmwc	FP9760261057	DPT's FOR SW & CW LINES FOR 1 No's BFP SETS (BFP) UNCHAHAAR
		Z - 2 Nos.	DPT: 0.13-1.3 kg/cm^2.		
06	TYPE-A	X – 6 Nos.	PT: 0 – 40 kg/cm^2.	FP9760261065	UNCHAHAAR (CEP)
		Z – 3 Nos.	DPT : 0 – 3200 mmwc		
07	TYPE-A	Z - 4 Nos.	DPT: 0-6400mmwc	FP9760261073	DPT's FOR SW & CW LINES FOR 2 No's BFP SETS (BFP) UNCHAHAAR
		Z - 4 Nos.	DPT: 0.13-1.3 kg/cm^2.		
08	TYPE-C	Y - 3 Nos.	PT: 0 – 60 kg/cm^2.	FP9760261081	MOUDA 660MW (CEP-C PT's)
09	TYPE-A	X- 9 Nos.	PT: 0 – 60 kg/cm^2.	FP9760261090	GADARWARA , NORTH KARANPURA (CEP - 3 PUMP'S)
10	TYPE-A	X – 3No's	PT: 0 – 60 kg/cm^2.	FP9760261103	GADARWARA (1 NO PER BFP)
		Y – 1No's	PT: 0 – 400 kg/cm^2.		
		Z – 2 No's	DPT : 0 – 6400 MMWC		

COPYRIGHT AND CONFIDENTIAL
The information on this document is the property of BHARAT HEAVY ELECTRICALS LIMITED .
It must not be used directly or indirectly in any way detrimental to the interest of the company.

11	TYPE-A	X – 2No's	PT: 0 – 60 kg/cm^2.	FP9760261111	NORTH KARANPURA (FOR 1 No. BFP SET FW LINE)
		Y – 2No's	PT: 0 – 400 kg/cm^2.		
		Z – 2 No's	DPT : 0 – 6400 MMWC		
12	TYPE-A	X – 2No's	PT: 0 – 60 kg/cm^2.	FP9760261120	MAITREE BANGLADESH (FOR 1 No. BFP SET FW LINE
		Y – 1No's	PT: 0 – 400 kg/cm^2.		
		Z – 2 No's	DPT : 0 – 6400 MMWC		
13	TYPE-C	Z – 3 Nos	DPT : 0 – 3200 mmwc	FP9760261138	660 MW (CEP) PROFIBUS TYPE WITHOUT JUNCTION BOX
14	TYPE-A	X- 9 Nos.	PT: 0 – 60 kg/cm^2.	FP9760261146	(CEP - 3 PUMP'S) PROFIBUS TYPE WITHOUT JUNCTION BOX
15	TYPE-C	Z - 2 Nos.	DPT: 0-6400 mmwc	FP9760261154	DPT's FOR SW & CW LINES FOR 1 No's MDBFP SETS (BFP) PROFIBUS TYPE WITHOUT JUNCTION BOX
		Z - 2 Nos.	DPT: 0.13-1.3 kg/cm^2.		
16	TYPE-A	X – 3No's	PT: 0 – 60 kg/cm^2.	FP9760261162	660MW & 800MW (1 NO PER MDBFP) PROFIBUS TYPE WITHOUT JUNCTION BOX
		Y – 1No's	PT: 0 – 400 kg/cm^2.		
		Z – 2 No's	DPT : 0 – 6400 MMWC		

Note: Var 13,14,15 &16 junction box not included.

NOTE TO VENDOR: -

1. All transmitters including DPTS electrical connection shall be supplied with **PLUG AND SOCKET** type.
2. Transmitters shall comply Annexure-I

COPYRIGHT AND CONFIDENTIAL
The information on this document is the property of BHARAT HEAVY ELECTRICALS LIMITED .
It must not be used directly or indirectly in any way detrimental to the interest of the company.

Ref. Doc

COPYRIGHT AND CONFIDENTIAL
The information on this document is the property of BHARAT HEAVY ELECTRICALS LIMITED .
It must not be used directly or indirectly in any way detrimental to the interest of the company.

LIST OF VENDORS FOR INSTRUMENTS AND TRA COMPONENTS

A. Impulse pipes/tubes
01. Sumitomo, Japan
02. Manessman, Germany
03. TPS Technitube, Germany
04. Trouvay & Cauvin, France
05. ISMT, Ahmedanagar (only for carbon steel pipes)
06. Maharashtra seamless, Delhi (only for carbon steel pipes)
07. BHEL, Trichy

B. Socket weld fitting
01. Vikas, Delhi
02. Excel Hydro, Mumbai
03. HP valves & fittings, Chennai

C. Compression fittings
01. Precision, Mumbai
02. Swagelock, USA
03. Excel Hydro, Mumbai (with ferrules hardened at ex imp holland for 9000 psi rated fittings)
04. HP valves & fittings, Chennai
05. Swastik Engg Works Mumbai

D. Instrument Valves
01. IL, Palghat
02. BHEL, Trichy
03. Excel Hydro, Mumbai
04. Precision Engg Industry Mumbai
05. HP valves & fittings, Chennai
06. Swastik Engg Works Mumbai

E. Valve manifolds
01. Schneider, Germany
02. Excel hydro, Mumbai
03. Anderson greenwood, UK
04. Precision Engg Industry Mumbai
05. HP valves & fittings, Chennai
06. Swastik Engg Works Mumbai

F. Cage clamp type terminals used in juction box:
01. Phoenix
02. Wago
03. Connectwell industries pvt ltd, Dombivli-421204

G. Pr. & Diff. pr. Transmitters.
01. ABB instrumentation, Faridabad or ITALY **(2600T MODEL)**
02. Emerson (Rosemount), USA/Pawance
03. Yokogawa, Japan (Calibration at Bangalore Acceptable)
04. Fuji, China
05. Siemens, France/India
06. Honeywell, Pune

H. Pr. & Diff. pr. Transmitters. (field bus)
01. ABB India limited, Bengaluru

Annexure-I

Transmitters:

1) All transmitters (With HART protocol) shall have an impressed output signal of 4-20 mA corresponding to zero to full range input. However, digital communication shall also be acceptable.
2) Generally, 2-wire transmitters shall be used. If for some special purposes (e.g. analyzers) 230 V AC power supply is required, the output circuit shall be isolated.
3) As far as possible, all transmitters shall be of the SMART – type, if applicable. This applies also to field mounted temperature transmitters.
4) All transmitters (With HART protocol) shall be fitted with a local analog indicator displaying appropriate physical units which may be read clearly from an easily accessible position.
5) Transmitters with accuracy class "0" or better must be used. The repeatability shall be within a range of ± 0.1 % of full span.
6) The output signal of all transmitters must be independent of the burden of the transmitter output circuit including cable resistance over a wide range.
7) The removable of connected devices must not open the transmitter output circuit or cause malfunction of this circuit. In the case of failure and return of the supply voltage within a measuring circuit, no false signals endangering the system shall be issued. All transmitters shall be individually fused. If not specified otherwise, local parameterization at each transmitter or protocol shall be possible.
8) For the continuous remote position indication of valves, dampers etc. also transmitters (With HART protocol) with impressed output signal of 4-20 mA shall be employed.

COPYRIGHT AND CONFIDENTIAL
The information on this document is the property of BHARAT HEAVY ELECTRICALS LIMITED .
It must not be used directly or indirectly in any way detrimental to the interest of the company.

9) All transmitters shall be suitable for field installation and shall have strong, moisture and dustproof cases of IP 65 or better according to EN 60529. This applies also for temperature transmitters when installed in the field.

10) Diaphragm seals shall be provided to serve as a barrier for corrosive process fluids, slurries or highly viscous oils. The seal shall be of the flanged type, suitable for the same conditions as those for the transmitter. The material selection shall be according to the requirements of the fluids to be measured. The seal shall be provided with a flushing connection.

11) Transmitters to be used in hazardous areas shall be explosion proof. Suitable intrinsically safe circuits are to be provided in accordance with EN 60079-11.

12) All transmitters potentially subjected to vacuum shall be capable of withstanding 100% vacuum without damage.

13) No stress shall be imposed through the connections between Plant and the transmitter. As far as possible, the transmitters shall be grouped together into enclosed racks or panels for easy access. Sunshades shall be provided for all outdoor panels.

14) Individually installed Transmitters shall have their own weather proof enclosure of robust construction and be suitable for the proposed environment. All field equipment terminals shall be wired to a terminal box using screwed connections.

15) Transmitters shall be provided with all necessary isolating, vent and blow-down valves and facilities shall be provided for the connection of test instruments at the input and output of each transmitter, to enable calibration to be carried out.

COPYRIGHT AND CONFIDENTIAL
The information on this document is the property of BHARAT HEAVY ELECTRICALS LIMITED .
It must not be used directly or indirectly in any way detrimental to the interest of the company.

RECORD OF REVISIONS

Rev No.	Date	Revision Details	Revised By	Approved By
01	30.09.2014	1. VAR-08 ADDED. 2. VENDORS LIST FOR INSTRUMENTS AND TRA COMPONENTS UPDATED.	R.P	M.M.RAO
02	31.01.2015	ANNEXURE-I UPDATED.	R.P	AVINASH
03	27.04.2015	1. VAR-09 & 10 ADDED.	RAJESH	SRINIVAS.P
04	02.07.2015	1. VAR-11 ADDED.	R.P	SRINIVAS.P
05	04.08.2015	1. VAR-11 INSTRUMENTS QTY REVISED.	R.P	SRINIVAS.P
06	01.02.2018	VAR. NO.12 & Annexure-I ADDED	SATISH	KHRK
07	29.08.2022	VAR. NO.13 TO 16 FOR PROFIBUS TYPE	KK	SK

COPYRIGHT AND CONFIDENTIAL
The information on this document is the property of BHARAT HEAVY ELECTRICALS LIMITED .
It must not be used directly or indirectly in any way detrimental to the interest of the company.

FIRST ANGLE PROJECTION

(ALL DIMENSIONS ARE IN mm)

DRG.NO. 2 180 005 4582

THE INFORMATION ON THIS DOCUMENT IS THE PROPERTY OF BHARAT HEAVY ELECTRICALS LIMITED.
IT MUST NOT BE USED DIRECTLY OR INDIRECTLY IN ANY WAY DETRIMENTAL TO THE INTEREST OF THE COMPANY.

COMP. FILE NAME FP2180005 4582-00

INVENTORY NO.

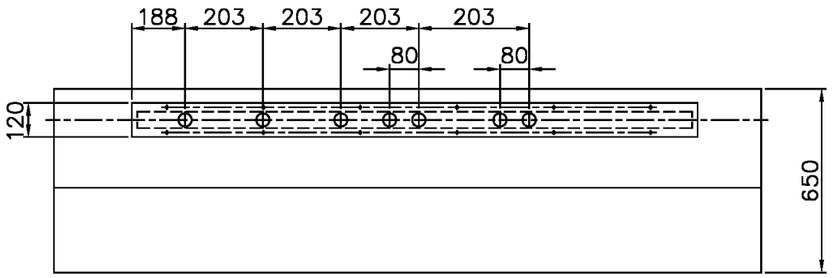

TOP VIEW

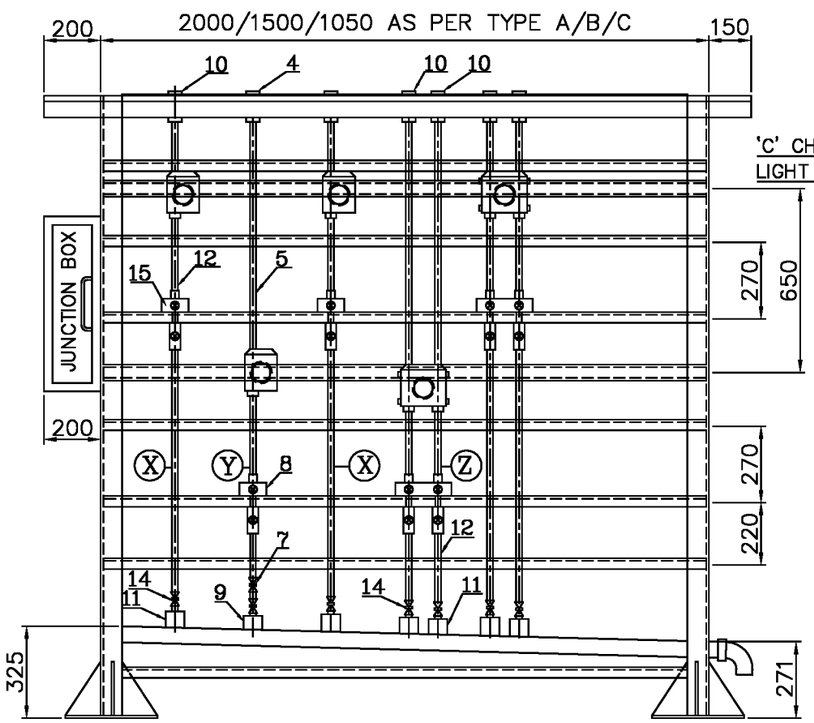

FRONT VIEW

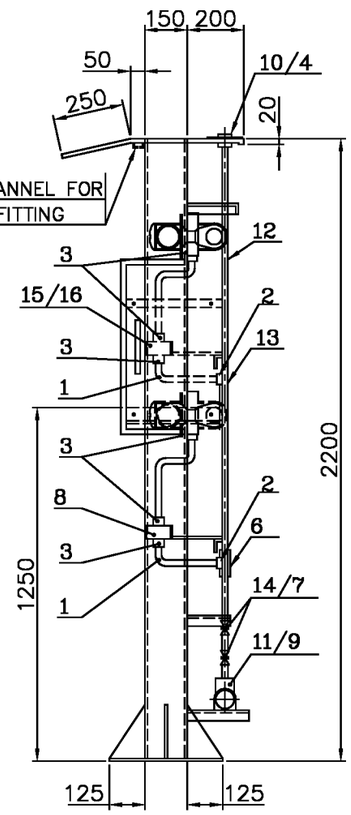

SIDE VIEW

NOTES:

1. TYPICAL HOOK UP/ INSTALLATION SCHEMES FOR TRANSMITTERS/DP TRANSMITTERS

   (X)– BP SUCTION /BFP SUCTION/CEP DISCHARGE PRESSURE TRANSMITTERS

   (Y)– BFP DISCHARGE PRESSURE TRANSMITTERS

   (Z)– DP ACCROSS BP/BFP/CEP SUCTION STRAINERS (DP TRANSMITTERS)

2. FOR NO. OF HOOK UP LINES TO BE INSTALLED, REFER PRODUCT STD. FP60167, VARIANTS TABLE, PAGE 10 & 11.

ITEM NO.	DESCRIPTION	VALID FOR HOOK UP/ INSTALLATION SCHEME
16	FIVE VALVE MANIFOLD WITH VENT PLUG, PORT SIZE : ½" NPT(F)/ MATL SS316, PR. TESTING :3000 PSI	(Z)
15	TWO VALVE MANIFOLD WITH VENT PLUG PORT SIZE: ½" NPT(F) MATL:SS316 PR. TESTING:3000PSI	(X) (Z)
14	FORGED GLOBE VALVE BODY:ASTM A105/STEM:ASTM A182, Gr F6A SIZE: ½" NB–SW/CL:800.	(X) (Z)
13	FORGED TEE AS PER ANSI B16.11 MATL:ASTM A105 SIZE: ½" NB–SW CL: 3000 LBS	(X) (Z)
12	IMPULSE PIPE MATL: ASTM A106 GR. B SIZE: ½" NB–SCH–80.	(X) (Z)
11	HALF COULING AS PER ANSI B16.11	(X) (Z)
10	BULK HEAD UNION COUPLING AS PER ANSI B16.11 MATL: ASTM A105 SIZE : ½" NB–SW/CL 3000 LBSx16.50mm ID–SW	(X) (Z)
9	HALF COULING /½" NB–SW AS PER ANSI B16.11	(Y)
8	TWO VALVE MANIFOLD WITH VENT PLUG PORT SIZE:½" NPT(F) PR. TESTING:6000 PSI/MATL:SS316	(Y)
7	FORGED GLOBE VALVE BODY:ASTM A105/STEM:ASTM A182 GR.F6A SIZE ½" NB–SW/CL:2500.	(Y)
6	FORGED TEE/ AS PER ANSI B16.11 MATL:ASTM A105 SIZE: ½" NB–SW/CL:6000LBS.	(Y)
5	IMPULSE PIPE MATL: ASTM A106 GR.C SIZE: ½" NB–SCH 160.	(Y)
4	BULK HEAD UNION COUPLING AS PER ANSI B16.11 MATL: ASTM A105 SIZE : ½" NB–SW/CL 6000 LBSx16.50mm ID–SW	(Y)
3	TUBE FITTING TYPE: DFDC (DOUBLE FERROLE DOUBLE COMPRESSION) MATL:SS316 SIZE: ½" NPT(M) x TO SUIT ½" OD SS TUBE	(X) (Y) (Z)
2	TEE–TUBE UNION MAT: SS316 SIZE:OD OF ½" NB PIPE x TO SUIT ½" OD SS TUBE	(X) (Y) (Z)
1	TUBE MATL: A213 TP 316H SIZE : ½" OD x 2.1MM THICK	(X) (Y) (Z)

THE FOLLOWING CONDITIONS APPLY EXCEPT OTHERWISE STATED...

1. REF.TO HY0230261 FOR UNSPECIFIED TOLERANCES.
2. CHAMFER M/CD SHARP EDGES 1.2 TO 1.0 AT 45°.
3. INTERNAL M/CD CORNER RADII 1 TO 0.7.
4. THE SURFACE ROUGHNESS WHEREVER NOT SHOWN SHALL BE TAKEN FROM THE SURFACE ROUGHNESS SHOWN OUT SIDE BACK SLASHES GIVEN AT THE TOP MOST RIGHT CORNER OF THE DRG.

TYPE OF PRODUCT OR NAME OF CUSTOMER/PROJECT: BFP / CEP

BHARAT HEAVY ELECTRICALS LTD. HYDERABAD

	NAME	SIGN.	DATE
DRN.	G.AMBAJEE		25.11.04
CHD.	M.M.R.		25.11.04
APPD.	B.R.K.		26.11.04

NO.OF VAR.: NA

DEPT.	PUMPS	SCALE	WEIGHT(Kg)	REF. TO ASSY DRG.	ITEM NO.	NO.OF ITEMS
CODE	410	1:15	N.A	N.A	N.A	NA

TITLE: LAYOUT AND MOUNTING ARRGT. OF TRANSMITTER RACK

DRAWING NO. 2 180 005 4582 REV. 00

SHEET NO. 01 NO OF SHEETS 01

REV.	DATE	ALTERED	CHECKED	APPD.	REV.	DATE	ALTERED	CHECKED	APPD.	REV.	DATE	ALTERED	CHECKED	APPD.	REV.	DATE	ALTERED	CHECKED	APPD.
ZONE					ZONE					ZONE					ZONE				

(To be executed on Non- Judicial Stamp Paper for an appropriate value.
To be stamped as an agreement)

(For Suppliers on Unit's / Division's PMD)

ANNEXURE-II

Framework Confidentiality Agreement Cum Undertaking

This Agreement made on this the _____ day of (month) _____ 20 ___ ("Effective Date") by and between M/s. BHARAT HEAVY ELECTRICALS LIMITED, having registered office at "BHEL House", Siri Fort, New Delhi – 110049 (India), acting through its _____ Unit (hereinafter may be referred to as "BHEL" or "the company").

And

M/s. _____ (address) _____ represented by authorized representative Sri _____ (herein after referred to as the "Supplier").

The supplier and the company may, unless the context otherwise requires, hereinafter be collectively referred to as "Parties" or singly as the "Party".

RECITALS

Whereas, BHEL is engaged in the design, engineering, manufacturing, construction, testing, commissioning and servicing of a wide range of products, systems and services for the core sectors of the economy, viz. Power, Transmission, Industry, Transportation, Renewable energy, Oil & Gas and Defence and providing associated services to varied customers in relation to which BHEL / its affiliates own valuable information of a secret and confidential nature.
Whereas the Company may, in connection with contract(s) (as defined hereunder) placed or to be placed upon the supplier, or otherwise, from time to time, make available, Technical Information as is defined hereunder.

And Whereas BHEL is willing to provide such Technical Information to the Supplier from time to time and the Supplier understands and acknowledges that such Technical Information is valuable for the Company and as such is willing to protect confidentiality of such information, subject to the terms and conditions set out hereunder.

Now therefore, in view of the foregoing premises and in consideration of the mutual covenants and agreements hereinafter set forth, the parties agree as under:

1. Definitions:

Unless the context so requires, in this Agreement, the following terms will bear the meaning ascribed to the said term in this clause.

A. **"Contract"** means the contract entered into with a supplier and includes a Purchase Order, or a Work Order for procurement of any goods or for provision of any services.
B. **"Effective Date"** means the date of this Agreement as mentioned in the preamble of this Agreement.
C. **"Supplier"** includes a Contractor or a Vendor of the Company whether for supplying of goods or for providing any services under a Contract or both.
D. **"Technical Information"** includes Drawings, and / or Product Standards and / or Specifications and / or Corporate / Plant Specifications and / or Technological Process Sheets and / or Technical Data Sheets and / or Jigs & Fixtures and / or Pattern & Dies and / or Special Gauges and / or Tools etc. Belonging to or wherein the Company has acquired from a third party a right of user and includes any improvement thereto from time to time whether carried out by the Company or by the Suppliers.
E. **"Intended Purpose"** means the purpose for which the Technical Information is provided to the supplier under or in connection with a contract.
F. **"Improvement"** includes any modification made to, or adaptation of, the Technical Information which enhances or is calculated to enhance the performance (Whether in terms of effectiveness or in terms of efficiency or both) of the product and / or the service to be provided by the Supplier under a Contract.

2. This Agreement shall come into force / deemed to have come into force, as the case may be, on the Effective Date; or, on the first date when the Technical Information or any part thereof is provided by BHEL to the supplier; whichever is earlier.

3. **Agreement deemed to be incorporated in each contract:** Unless and to the extent otherwise stipulated in the Contract, the conditions of this Agreement are deemed to be incorporated in all Contracts which may be entered into between the Company and the Supplier. Further, unless otherwise stipulated, the obligations under this Agreement are and will be independent of the obligations under the Contracts and such obligations of the Supplier hereunder will remain of full effect and validity notwithstanding that the period of validity of the Contract has expired by efflux of time stipulated therein; or, the contract has been discharged by performance or breach; or, the termination of the Contracts for any reason whatsoever.

4. **Ownership:**

4.1 The Company may, from time to time, make available to the Supplier, Technical Information on a non-exclusive basis by way of loan.

4.2 The Supplier acknowledges and agrees that all Technical Information and copies thereof that are or may be provided by the Company to the Supplier, are and shall remain the property of

BHEL or that of the concerned entity from whom BHEL has obtained the Technical Information and such Technical Information are and shall constitute trade secrets of the BHEL. Nothing in this Agreement or in any disclosures made hereunder by or on behalf of the Company shall be construed as granting upon the Supplier any patent, copyright or design or any other intellectual property rights of whatsoever description that subsists or may hereinafter exist in the Technical Information. Furthermore, nothing in this Agreement or in any disclosures made hereunder by or on behalf of the Company shall be construed as granting upon the supplier any license or right of use of such patent, copyright or design or any other intellectual property rights of whatsoever description which may now or hereafter exist in the Technical Information except for use of the Technical Information strictly in accordance with this Agreement and the contract and / or as directed in writing by the Company, solely for the Intended Purpose under the Contract.

4.3 Neither party is obligated by or under this Agreement to purchase from or provide to the other party any service or product and that any such purchase / sale of any product and / or service by one party to the other party will be governed by the Contract if any, that may be entered into by and between the Company and the Supplier.

4.4 The Supplier is / has been made well aware and acknowledges that the Technical Information being / which may be shared with it by the Company has been either generated by the Company by incurring huge investment and cost or obtained from foreign collaborators under Technical Collaboration Agreement (TCA) with stringent confidentiality conditions.

4.5 The supplier agrees and undertakes to adhere to confidentiality requirements as applicable to BHEL under a TCA and also ensure that the confidentiality requirements are adhered to by all its concerned employees or sub-contractors /suppliers (where permitted to be engaged by BHEL). Any damages, losses, expenses of any description whatsoever, arising out of or in connection with a breach of the confidentiality requirements under a TCA owing to any act or omission on the part of the supplier or its employees or sub-contractors / suppliers that is claimed by a foreign collaborator from the Company shall be wholly borne by the Supplier and it shall keep BHEL fully indemnified in this behalf. The demand by the Company shall be conclusive upon the Supplier who shall thereupon forthwith pay to the Company without demur, dispute or delay the amount as demanded without demanding any further proof thereof.

4.6 The Supplier agrees and undertakes that unless so decided and advised by the Company in writing all rights / title to any Improvement to the Technical Information shall vest in the Company. The Supplier undertakes and agrees to inform forthwith to the Company of any such Improvement made to the Technical Information and transfer all drawings / documents or other materials connected with such Improvement to the Company and also agrees to fully cooperate with the Company for protecting the Company's interests in such Improvements

in the Technical Information including but not limited to obtaining necessary protection for the intellectual property rights in such improvement, if so desired by the Company. If a question arises whether a modification amounts to improvement to the Technical Information, the same shall be decided by the Company and such decision shall be final and binding upon the supplier.

5. Use and Non – Disclosure:

5.1 Unless otherwise stipulated by the Company, all Technical Information made available to the supplier, by the Company shall be treated as Confidential irrespective of whether the same is marked or otherwise denoted to be Confidential or not.

5.2 The Supplier undertakes and agrees that the Technical Information in its possession shall be held in strict confidence and will be used strictly in accordance with this Agreement and solely for the Intended Purpose under the Contract. Use of the Technical Information for any other purpose other than Intended Purpose is prohibited.

5.3 In particular, the Supplier shall not use Technical Information or any Improvement in its possession for the manufacture or procurement of the product(s) or components or parts thereof or use the Technical Information or any portion thereof or any modification or adaptation thereof in any form to provide any product and / or service to any third party, without the prior written consent of the Company.

5.4 The Supplier shall not disclose any of such Technical Information to any third party without the prior written consent of the Company. The Supplier agrees that without prior written consent of the Company, the supplier shall not disclose to a third party about the existence of this Agreement, or of the fact that it is / was in possession of or has experience in the use of any Technical Information nor shall the Supplier share in any manner whatsoever, with a third party, the name or details of any Contract(s) awarded by the Company to it or performed by the Supplier or the scope of work thereof or share any document or correspondence by and between the Company and the supplier in or in connection with this Agreement or such Contract(s). Notwithstanding what is stated elsewhere, the overall responsibility of any breach of the confidentiality provisions under this Agreement shall rest with the Supplier.

5.5 This Supplier undertakes and agrees not to make copies or extracts of and not to disclose to other any or all of the Technical Information in its possession, except as follows:

(a) The Supplier may disclose the Technical Information to such of its officers and employees strictly to the extent as is necessary for such officer or employee for the Intended Purpose, provided that the Confidential Information (or copies thereof) disclosed shall be marked

clearly as the confidential and proprietary information of Company and that such officers and employees shall similarly be bound by undertakings of confidence, restricted use and non-disclosure in respect of the Technical Information. The Supplier shall be responsible for any breach of such confidentiality provisions by such officers and employees.

(b) With the prior written consent of Company, the supplier may disclose for the Intended Purpose such Technical Information as is provided for in such consent to such of its professional advisers: consultants, insurers and subcontractors who shall be similarly bound by undertakings of confidence, restricted use and non-disclosure in respect of such Technical Information.

(c) The Supplier shall not be prevented to make any disclosure required by (i) order of a court of competent jurisdiction or (ii) any competent regulatory authority or agency where such disclosure is required by law, provided that where the supplier intends to make such disclosure, it shall first consult Company and take all reasonable steps requested by it to minimize the extent of the Technical Information disclosed and to make such disclosure in confidence and also shall cooperate with the Company in seeking any protective order or any other remedy from proper authority in this matter.

6. <u>Exceptions:</u>

The Obligations of the Supplier pursuant to the provisions of this agreement shall not apply to any Confidential Information that:

a) was / is known to, or in the possession of the Supplier prior to disclosure thereof by the Company;
b) is or becomes publicly known, otherwise than as a result of a breach of this agreement by the Supplier.
c) is developed independently of the Disclosing party by the Supplier in circumstances that do not amount to a breach of the provisions of this Agreement or the Contract;
d) is received from a third party in circumstances that do not result in a breach of the provisions of this Agreement.

7. The Obligation of maintaining confidentiality of the Technical Information on each occasion, shall subsist for the entire duration during which the Technical Information / equipment is in possession of the Supplier and shall thereafter subsist for a further period of _____ years from the date when the complete Technical Information has been returned in portions on different dates, the period of ____ years will be reckoned from the date when the last portion of the Technical Information has been returned. Notwithstanding the expiry of the confidentiality obligation, the obligation of the Supplier under clause 5.4 shall continue to subsist for a further period of _____ years.

8. <u>Warranties & Undertakings</u>:

a) The Supplier undertakes to ensure the due observance of the undertakings of confidence, restricted use and non-disclosure by its persons to whom it discloses or releases copies or extracts of the Technical Information.

b) The Supplier shall keep the Technical Information or improvement made therein properly segregated and not mix up the same with any other material / documents belongings to him / it or to any other third party.

c) The Supplier further undertakes that he / it shall not hypothecate or give on lease or otherwise alienate or do away with any of the Technical Information and / or equipment of the Company, made available to him / it, and undertakes that he / it shall hold the same as a trustee, in capacity of custodian thereof and use / utilise the same solely for the purpose of executing the contract awarded by the Company.

d) The Supplier further undertakes that he / it shall return all the equipment and / or Technical Information as far as practicable in the same condition in which the same was made available to him / it by the Company together with any Improvement thereon and the documents connected with such Improvement, to the Company forthwith upon completion of the scope of work or contract for which such Technical Information was provided by the Company to it or as directed by the Company together with a confirmation by way of an affidavit or in such manner as directed by the Company that it has not retained any equipment and / or Technical Information / improvement thereof. In case any such equipment and / or Technical Information or thereof shall remain in his possession or is not capable of being returned, the retention and use of such Technical Information or improvement thereto shall continue to be governed by this Agreement.

e) The Supplier undertakes to indemnify the Company for all the direct, indirect and / or consequential losses, damages, expenses whatsoever including any consequential loss of business, profits suffered by the Company owing to breach by the Supplier of its obligations under this Agreement and / or the confidentiality requirements, if any, contained in the Contract and that the Supplier hereby agrees that the decision of the Company in all such or any such matter/s shall be final and binding on the Supplier. On mere written demand of the Company, the Supplier shall forthwith and without demur or delay pay to the Company any such sum as determined by the Company as the amount of loss or damage or expense which has been suffered by the Company. The Supplier agrees that the Company shall be entitled to withhold and appropriate any amount payable to the Supplier under any Contract then existing between the Company and the Supplier, in case the Supplier fails to make payment, in terms of the written demand, within 7 days thereof. Without prejudice to the forgoing actions, in respect to any breach of this Agreement, the Company shall be entitled to take

any other action against the Supplier as per applicable laws, the Contract, Company's applicable policies, guidelines rules, procedures, etc.

9. Without prejudice to any other mode of recovery as may be available to the Company for recovery of the amount determined as due as per Clause 9 (f) hereinabove, the Company shall have a right to withhold, recovery and appropriate the amount due towards such losses, damages, expenses, from any amount due to the Supplier in respect of any other Contract (s) placed on him / it by any department / office / unit/ division of the said Company.

10. <u>Arbitration & Conciliation:</u>

Except as provided elsewhere in this Contract, in case amicable settlement is not reached between the Parties, in respect of any dispute or difference; arising out of the formation, breach, termination, penalty deduction, validity or execution of the Contract; time extension, or, the respective rights and liabilities of the Parties; or, in relation to interpretation of any provision of the Contract; or, in any manner touching upon the Contract, then, either Party may, by a notice in writing to the other Party refer such dispute or difference to the sole arbitration . Sole arbitrator to be appointed by Head of the Unit - BHEL, HPEP.

The Arbitrator shall pass a reasoned award and the award of the Arbitrator shall be final and binding upon the Parties.

Subject as aforesaid, the provisions of Arbitration and Conciliation Act 1996 (India) or statutory modifications or re-enactments thereof and the rules made thereunder and for the time being in force shall apply to the arbitration proceedings under this clause.

The seat of arbitration shall be Sangareddy / Hyderabad, Telangana. The language of arbitration shall be English and the documents shall be submitted in English.

The cost of arbitration shall initially be borne equally by the Parties subject to the final apportionment of the cost of the arbitration in the award of the Arbitrator.

Subject to the arbitration in terms of clause 46 of ITB (clause 27 of ATC GeM), the courts at Sangareddy, Telangana State shall have exclusive jurisdiction over any matter arising out of or in connection with this contract.

Notwithstanding the existence or any dispute or differences and/or reference for the arbitration, the Contractor shall proceed with and continue without hindrance the performance of its obligations under this Contract with due diligence and expedition in a professional manner except where the Contract has been terminated by either Party in terms of this Contract.

ARBITRATION FOR CONTRACT WITH PUBLIC SECTOR ENTERPRISE (PSE) OR A GOVERNMENT DEPARTMENT

In the event of any dispute or difference relating to the interpretation and application of the provisions of commercial contract(s) between Central Public Sector Enterprises (CPSEs/ Port Trusts inter se and also between CPSEs and Government Departments/Organizations (excluding disputes concerning Railways, Income Tax, Customs & Excise Departments), such dispute or difference shall be taken up by either party for resolution through AMRCD as mentioned in DPE 0M No 4(1)/2013-DPE(GM/FTS 1835 dated 22-05-2018

CONCILIATION CLAUSE FOR CONDUCTING CONCILIATION PROCEEDINGS UNDER THE BHEL CONCILIATION SCHEME, 2018: The Parties agree that if at any time (whether before, during or after the arbitral or judicial proceedings), any Disputes (which term shall mean and include any dispute, difference, question or disagreement arising in connection with construction, meaning, operation, effect, interpretation or breach of the agreement, contract or the Memorandum of Understanding, penalty deduction, time extension), which the Parties are unable to settle mutually, arise inter-se the Parties, the same may, be referred by either party to Conciliation to be conducted through Independent Experts Committee to be appointed by competent authority of BHEL from the BHEL Panel of Conciliators.

The proceedings of Conciliation shall broadly be governed by Part-III of the Arbitration and Conciliation Act 1996 or any statutory modification thereof and as provided in Procedure in http://www.bhel.com/index.php/story_details?story=2454 . The Procedure together with its Formats will be treated as if the same is part and parcel hereof and shall be as effectual as if set out herein in this ITB

11. Governing Law & Jurisdiction:

This agreement shall be construed and interpreted in accordance with the laws of India and shall have exclusive jurisdiction of Sangareddy/Hyderabad courts, Telangana, India.

SIGNATURE

WITNESSES

1

Name:

Address:

2

Name:

Address:

WEATHER PROOF PRESSURE TRANSMITTERS (TC 55817)

Var. No	Calibration Range (0-min-max) Kg/cm2	BHEL, Material Code
1	0 to 1 (ABS)	TC9755817018
2	-1 to +1.5	TC9755817026
3	-1 to +4	TC9755817034
4	-1 to +9	TC9755817042
5	-1 to +10	TC9755817050
6	-1 to +16	TC9755817069
7	0 to 2.5	TC9755817077
8	0 to 4	TC9755817085
9	0 to 6	TC9755817093
10	0 to 10	TC9755817107
11	0 to 16	TC9755817115
12	0 to 25	TC9755817123
13	0 to 40	TC9755817131
14	0 to 60	TC9755817140
15	0 to 100	TC9755817158
16	0 to 160	TC9755817166
17	0 to 250	TC9755817174
18	0 to 400	TC9755817182

WEATHER PROOF PRESSURE TRANSMITTERS (TC 55817)

Var. No	Measuring Range (0-min-max)(Kg/cm2)	Static pressure (Kg/cm2)	BHEL, Material Code
81	-300 to 800 mmWC	160	TC9755817816
82	0-60-600 mmWC	160	TC9755817824
83	0-320-3200 mmWC	160	TC9755817832
84	0-640-6400 mmWC	160	TC9755817840
85	0-0.13-1.3	160	TC9755817859
86	0-0.5-5	160	TC9755817867
87	0-0.2-20	160	TC9755817875
88	0-0.3-30	160	TC9755817883
89	-5 to 25	250	TC9755817891
90	0-0.5-10	250	TC9755817905

WEATHER PROOF PRESSURE TRANSMITTERS (FP60348)

Var. No	Calibration Range (0-min-max) Kg/cm2	BHEL, Material Code
1	0 to 60	FP9760348012
2	0 to 400	FP9760348020

WEATHER PROOF PRESSURE TRANSMITTERS (FP60348)

Var. No	Measuring Range (0-min-max)(Kg/cm2)	Static pressure (Kg/cm2)	BHEL, Material Code
31	0-320-3200 mmWC	160	FP9760348314
32	0-640-6400 mmWC	160	FP9760348322
33	0-0.13-1.3	160	FP9760348330

PRESSURE GAUGE (FP60123) List

VAR. No.	RANGE(Kg/cm^2)	PURPOSE	MATERIAL CODE
1	-1.0 to +1.0	Cond. pump suction	FP9760123010
2	0 to 4.0	BFP Brgs. oil supply	FP9760123029
3	0 to 16.0	BP suc. pr./CEP S.W inlet pr.	FP9760123037
4	0 to 25.0	BP disch. pressure	FP9760123045
5	0 to 40.0	BP disch. pr / CEP disch.pr.	FP9760123053
6	0 to 60.0	CEP disch. pressure	FP9760123061
7	0 to 250.0	BFP disch. pressure	FP9760123070
8	0 to 350.0	BFP disch. pressure	FP9760123088
9	0 to 400.0	BFP disch. pressure	FP9760123096
10	0 to 35	CEP disch. pressure	FP9760123100
11	0 to 6	BFP suc. pressure	FP9760123118
12	0 to 10	B.C. Leak off pressure	FP9760123126
13	0 to 160	BFP disch. Pressure	FP9760123134

DIFFERENTIAL PRESSURE GAUGE (FP60124) List

Var.No	Range (kg/cm²)	Static Pressure (kg/cm²)	Service	Material code
1	0 to 0.4 kg/cm²	15	BP seal filter/BP strainer	FP9760124017
2	0 to 0.15 kg/cm²	15	CEP suction strainer	FP9760124025
3	0 to 0.5 kg/cm²	30	BFP suction strainer	FP9760124033
4	0 to 2.0 kg/cm²	30	BFP Seal filters	FP9760124041
5	0 to 0.2 kg/cm^2	15	CEP suction strainer	FP9760124050
6	0 to 1.0 kg/cm²	30	BFP SEAL FILTER	FP9760124068

TEMPERATURE GAUGE (FP60127) List

VAR NO.	RANGE Deg.c	IMMERSION LENGTH (L1) ADJUSTABLE	TOTAL STEM LENGTH(L) (Max)	PROCESS CONN	BULB DIA D	PURPOSE	Material code.
1	0 to 60	100 – 200	250	½" NPT(M)	12	CW I & O to BFP seal cooler.JRNL.	FP9760127016
2	0 to 120	100 – 200	250	¾" NPT(M)	12	BFP,BP Brg. Metal Temp.(210mw)	FP9760127024
3	0 to 120	50 – 100	150	¾" NPT(M)	12	CEP Thrust Brg. Temp.(210/500mw)	FP9760127032
4	0 to 200	100 - 200	300	¾" NPT(M)	12	BFP suc. & disch. Temp. (210mw)	FP9760127040
5	0 to 120	100 - 200	250	½" NPT(M)	12	BFP S.W.IL& OL and BFP, BP, Motor brg. drain oil temp. for 210/500 mw. & also for brg metal temp for 500 mw BFP&BP	FP9760127059
6	0 to 200	150 - 250	300	½" NPT(M)	12	BFP suction & disch Temp. (500mw)	FP9760127067
7	0 to 200	100-200	300	M20x1.5(6g)	12	150KHI BFP suc & Disch temp.	--
8	0 to 120	100-200	250	M20x1.5(6g)	12	150 KHI BFP journal By (DE,NDE),thrust Motor DE & NDE brgs.	--
9	0-200	140-155	175	¾" NPT(M)	10	BFP JRNL Brg metal temp (MHI)660 MW	FP9760127091
10	0-200	80-95	125	¾" NPT(M)	10	BP JRNL Brg.metal Temp (MHI) 660MW	FP9760127105
11	0-120	80-95	125	½" NPT(M)	12	BP Brg.drain oil temp.(MHI) 660MW	FP9760127113
12	0-120	175-190	225	½" NPT(M)	12	BFP Brg.drain oil temp.(MHI) 660MW	FP9760127121
13	0-200	48-52	120	3/4" NPT(M)	6	CEP Th.Brg oil temp.(MHI) 660MW	FP9760127130
14	0 to 250	150 - 250	300	½" NPT(M)	12	BFP suction & disch Temp. (660MW)	FP9760127148

Clause on IP in the tender

Integrity Pact (IP)

(a) IP is a tool to ensure that activities and transactions between the Company and its Bidders/ Contractors are handled in a fair, transparent and corruption free manner. Following Independent External Monitors (IEMs) on the present panel have been appointed by BHEL with the approval of CVC to oversee implementation of IP in BHEL.

Sl	IEM	Email
1.	Shri Otem Dai, IAS (Retd.)	iem1@bhel.in
2.	Shri Bishwamitra Pandey, IRAS (Retd.)	iem2@bhel.in
3.	Shri Mukesh Mittal, IRS (Retd.)	iem3@bhel.in

(b) The IP as enclosed with the tender is to be submitted (duly signed by authorized signatory) along with techno-commercial bid (Part-I, in case of two/ three part bid). Only those bidders who have entered into such an IP with BHEL would be competent to participate in the bidding. In other words, entering into this Pact would be a preliminary qualification.

(c) Please refer Section-8 of IP for Role and Responsibilities of IEMs. In case of any complaint arising out of the tendering process, the matter may be referred to any of the above IEM(s). All correspondence with the IEMs shall be done through email only.

Note:

No routine correspondence shall be addressed to the IEM (phone/ post/ email) regarding the clarifications, time extensions or any other administrative queries, etc on the tender issued. All such clarification/ issues shall be addressed directly to the tender issuing (procurement) department's officials whose contact details are provided below:

Details of contact person(s):

(1)
Name:Narendra Kumar
Deptt: Purchase/Pumps
Address: BHEL Hyderabad
Phone: (Landline/ Mobile)
___04023182440_
Email: narendrakmr@bhel.in
Fax: _____

(2)
Name:Nandgopal
Deptt: _Purchase/Pumps
Address: __BHEL Hyderabad
Phone: (Landline/ Mobile) _2440
Email: 9483944073
Fax: _____

INTEGRITY PACT

Between

Bharat Heavy Electricals Ltd. (BHEL), a company registered under the Companies Act 1956 and having its registered office at "BHEL House", Siri Fort, New Delhi – 110049 (India) hereinafter referred to as "The Principal", which expression unless repugnant to the context or meaning hereof shall include its successors or assigns of the ONE PART

and

_____, (description of the party along with address), hereinafter referred to as "The Bidder/ Contractor" which expression unless repugnant to the context or meaning hereof shall include its successors or assigns of the OTHER PART

Preamble

The Principal intends to award, under laid-down organizational procedures, contract/s for _____ _____ _____. The Principal values full compliance with all relevant laws of the land, rules and regulations, and the principles of economic use of resources, and of fairness and transparency in its relations with its Bidder(s)/ Contractor(s).

In order to achieve these goals, the Principal will appoint Independent External Monitor(s), who will monitor the tender process and the execution of the contract for compliance with the principles mentioned above.

Section 1 – Commitments of the Principal

1.1 The Principal commits itself to take all measures necessary to prevent corruption and to observe the following principles:-

1.1.1 No employee of the Principal, personally or through family members, will in connection with the tender for, or the execution of a contract, demand, take a promise for or accept, for self or third person, any material or immaterial benefit which the person is not legally entitled to.

1.1.2 The Principal will, during the tender process treat all Bidder(s) with equity and reason. The Principal will in particular, before and during the tender process, provide to all Bidder(s) the same information and will not provide to any Bidder(s) confidential / additional information through which the Bidder(s) could obtain an advantage in relation to the tender process or the contract execution.

1.1.3 The Principal will exclude from the process all known prejudiced persons.

1.2 If the Principal obtains information on the conduct of any of its employees which is a penal offence under the Indian Penal Code 1860 and Prevention of Corruption Act 1988 or any other statutory penal enactment, or if there be a substantive suspicion in this regard, the Principal will inform its Vigilance Office and in addition can initiate disciplinary actions.

Section 2 – Commitments of the Bidder(s)/ Contractor(s)

2.1 The Bidder(s)/ Contractor(s) commit himself to take all measures necessary to prevent corruption. He commits himself to observe the following principles during his participation in the tender process and during the contract execution.

2.1.1 The Bidder(s)/ Contractor(s) will not, directly or through any other person or firm, offer, promise or give to the Principal or to any of the Principal's employees involved

in the tender process or the execution of the contract or to any third person any material, immaterial or any other benefit which he / she is not legally entitled to, in order to obtain in exchange any advantage of any kind whatsoever during the tender process or during the execution of the contract.

2.1.2 The Bidder(s)/ Contractor(s) will not enter with other Bidder(s) into any illegal or undisclosed agreement or understanding, whether formal or informal. This applies in particular to prices, specifications, certifications, subsidiary contracts, submission or non-submission of bids or any other actions to restrict competitiveness or to introduce cartelization in the bidding process.

2.1.3 The Bidder(s)/ Contractor(s) will not commit any penal offence under the relevant IPC/ PC Act; further the Bidder(s)/ Contractor(s) will not use improperly, for purposes of competition or personal gain, or pass on to others, any information or document provided by the Principal as part of the business relationship, regarding plans, technical proposals and business details, including information contained or transmitted electronically.

2.1.4 The Bidder(s)/ Contractor(s) will, when presenting his bid, disclose any and all payments he has made, and is committed to or intends to make to agents, brokers or any other intermediaries in connection with the award of the contract.

2.2 The Bidder(s)/ Contractor(s) will not instigate third persons to commit offences outlined above or be an accessory to such offences.

Section 3 – Disqualification from tender process and exclusion from future contracts

If the Bidder(s)/ Contractor(s), before award or during execution has committed a transgression through a violation of Section 2 above, or acts in any other manner such as to put his reliability or credibility in question, the Principal is entitled to disqualify the Bidder(s)/ Contractor(s) from the tender process or take action as per the separate "Guidelines on Banning of Business dealings with Suppliers/ Contractors". framed by the Principal.

Section 4 – Compensation for Damages

4.1 If the Principal has disqualified the Bidder from the tender process prior to the award according to Section 3, the Principal is entitled to demand and recover the damages equivalent Earnest Money Deposit/Bid Security.

4.2 If the Principal has terminated the contract according to Section 3, or if the Principal is entitled to terminate the contract according to section 3, the Principal shall be entitled to demand and recover from the Contractor liquidated damages equivalent to 5% of the contract value or the amount equivalent to Security Deposit/Performance Bank Guarantee, whichever is higher.

Section 5 – Previous Transgression

5.1 The Bidder declares that no previous transgressions occurred in the last 3 years with any other company in any country conforming to the anti-corruption approach or with any other Public Sector Enterprise in India that could justify his exclusion from the tender process.

5.2 If the Bidder makes incorrect statement on this subject, he can be disqualified from the tender process or the contract, if already awarded, can be terminated for such reason.

Section 6 – Equal treatment of all Bidders/ Contractors/ Sub-contractors

6.1 The Bidder(s)/ Contractor(s) undertake(s) to obtain from all subcontractors a commitment consistent with this Integrity Pact and report Compliance to the Principal. This commitment shall be taken only from those sub-contractors whose contract value is more than 20 % of Bidder's/ Contractor's contract value with the Principal. The Bidder(s)/ Contractor(s) shall continue to remain responsible for any default by his Sub-contractor(s).

6.2 The Principal will enter into agreements with identical conditions as this one with all Bidders and Contractors.

6.3 The Principal will disqualify from the tender process all bidders who do not sign this pact or violate its provisions.

Section 7 – Criminal Charges against violating Bidders/ Contractors /Sub-contractors

If the Principal obtains knowledge of conduct of a Bidder, Contractor or Subcontractor, or of an employee or a representative or an associate of a Bidder, Contractor or Subcontractor which constitutes corruption, or if the Principal has substantive suspicion in this regard, the Principal will inform the Vigilance Office.

Section 8 –Independent External Monitor(s)

8.1 The Principal appoints competent and credible Independent External Monitor for this Pact. The task of the Monitor is to review independently and objectively, whether and to what extent the parties comply with the obligations under this agreement.

8.2 The Monitor is not subject to instructions by the representatives of the parties and performs his functions neutrally and independently. He reports to the CMD, BHEL.

8.3 The Bidder(s)/ Contractor(s) accepts that the Monitor has the right to access without restriction to all contract documentation of the Principal including that provided by the Bidder(s)/ Contractor(s). The Bidder(s)/ Contractor(s) will grant the monitor, upon his request and demonstration of a valid interest, unrestricted and unconditional access to his contract documentation. The same is applicable to Sub-contractor(s). The Monitor is under contractual obligation to treat the information and documents of the Bidder(s)/ Contractor(s) / Sub-contractor(s) with confidentiality.

8.4 The Principal will provide to the Monitor sufficient information about all meetings among the parties related to the contract provided such meetings could have an impact on the contractual relations between the Principal and the Contractor. The parties offer to the Monitor the option to participate in such meetings.

8.5 As soon as the Monitor notices, or believes to notice, a violation of this agreement, he will so inform the Management of the Principal and request the Management to discontinue or take corrective action, or heal the situation, or to take other relevant action. The Monitor can in this regard submit non-binding recommendations. Beyond this, the Monitor has no right to demand from the parties that they act in a specific manner, refrain from action or tolerate action.

8.6 The Monitor will submit a written report to the CMD, BHEL within 8 to 10 weeks from the date of reference or intimation to him by the Principal and, should the occasion arise, submit proposals for correcting problematic situations.

8.7 The CMD, BHEL shall decide the compensation to be paid to the Monitor and its terms and conditions.

8.8 If the Monitor has reported to the CMD, BHEL, a substantiated suspicion of an offence under relevant IPC / PC Act, and the CMD, BHEL has not, within reasonable time, taken visible action to proceed against such offence or reported it to the Vigilance Office, the

Monitor may also transmit this information directly to the Central Vigilance Commissioner, Government of India.

8.9 The number of Independent External Monitor(s) shall be decided by the CMD, BHEL.

8.10 The word 'Monitor' would include both singular and plural.

Section 9 – Pact Duration

9.1 This Pact begins and shall be binding on and from the submission of bid(s) by bidder(s). It expires for the Contractor 12 months after the last payment under the respective contract and for all other Bidders 6 months after the contract has been awarded.

9.2 If any claim is made / lodged during this time, the same shall be binding and continue to be valid despite the lapse of this pact as specified as above, unless it is discharged/ determined by the CMD, BHEL.

Section 10 – Other Provisions

10.1 This agreement is subject to Indian Laws and jurisdiction shall be registered office of the Principal, i.e. New Delhi.

10.2 Changes and supplements as well as termination notices need to be made in writing. Side agreements have not been made.

10.3 If the Contractor is a partnership or a consortium, this agreement must be signed by all partners or consortium members.

10.4 Should one or several provisions of this agreement turn out to be invalid, the remainder of this agreement remains valid. In this case, the parties will strive to come to an agreement to their original intentions.

10.5 Only those bidders/ contractors who have entered into this agreement with the Principal would be competent to participate in the bidding. In other words, entering into this agreement would be a preliminary qualification.

Nandgopal

---------- ----------

నంద గోపాల్ · नंद गोपाल
NANDGOPAL
वरिष्ठ प्रबंधक / क्रय पंप
Sr. Manager / Purchase Pumps
बी.एच.ई.एल.-एच.ई.पी., हैदराबाद-32, BHEL-HPEP, HYD-32.

For & On behalf of the Principal

(Office Seal)

For & On behalf of the Bidder/ Contractor

(Office Seal)

Place----Hyderabad

Date----------

Witness: Narendra Kumar

(Name & Address) _____

BHEL Hyderabad.

Witness: _____

(Name & Address) _____

(Attachment to Enquiry No. XXXXXXXXXX Due on Date XX.XX.XXXX for submission by 11.00 hrs to open from 14.00 hrs.)

INSTRUCTIONS TO BIDDER (ITB)

NOTE: Bidder to confirm in affirmative by typing "YES" or "Applicable Data" in the response column. Deviations, if any shall be recorded in deviations/comments column (Separate sheet can be attached if needed). Non deviatable clauses are indicated as "NON DEVIATABLE".

Sl. No.	DETAILED TERMS & CONDITIONS	BIDDER RESPONSE (YES/NO)	DEVIATIONS / COMMENT
1	**SCOPE OF SUPPLY:**		
	Signed & Sealed offers are invited for the Scope of Supply of goods or services or both as detailed in the enquiry. Relevant enclosures/supporting documents / catalogue, if any shall be enclosed to the technical offer.		
2	**DEFINITIONS**		
A	'The Buyer' means BHEL-HPEP, Ramachandrapuram, Hyderabad-502 032 of Bharat Heavy Electricals Limited (A Govt. of India Undertaking) incorporated under the companies Act having its registered office at BHEL House, Siri fort, New Delhi-110049, India and shall be deemed to include its successors and assigns. It may also be referred to as BHEL.		
B	'The Bidder' means the persons, firm, company or organization on whom the Purchase order is placed and shall be deemed to include the bidder's successors, representatives, heirs, executors and administrator as the case may be. It may also be referred to as Contractor, supplier or bidder.		
C	'Contract' shall mean and include the Purchase order incorporating various documents viz., Notice Inviting Tender (NIT), Offer, Letter Of Intent/Acceptance (LOI/LOA), Instruction to Bidders (ITB) and Special Conditions of Contract (SCC), specifications, inspection/quality plan, schedule of prices and quantities, drawings, if any, enclosed by Bidder/ provided by the Buyer or his authorized nominee and the samples or patterns if any to be provided under the provision of the contract. In case of any inconsistency or contradiction between any of the documents, the order of precedence shall be Purchase Order, LOI/LOA followed by Minutes Of Meeting (MOM), NIT, SCC, ITB.		
D	'Parties to the contract' shall mean the bidder and the buyer as named in the main body of the Purchase Order.		
E	'Goods/Material' shall include Works and Services which are incidental or consequential to supply.		
3	**GENERAL INSTRUCTIONS:**		
A	Mode of submission of offer shall be as indicated in SCC		**Non Deviatable**
B	The quotation should be neatly typed and free from over writing/ erasures. Any correction or addition must be authenticated. The offer including annexures and brochures should be submitted in English / Hindi. All Pages of Techno Commercial Bids (Main Pages), ITB, SCC should be signed and Stamped. If there is a conflict in case of bilingual submission, the submission in English will be final. Prices shall be quoted both in figures and words. In case of any discrepancy in value, the prices quoted in words shall be considered for evaluation and establishing L1 Status. Any discount / revised offer / bids submitted by a bidder on his own shall be considered, provided it is received on or before the due date and time of offer / bid submission (Part-1). Conditional discounts shall not be considered for evaluation of tenders.		**Non Deviatable**
C	Incomplete offers are liable for rejection.		**Non Deviatable**
D	Bidders to please note that the Terms & conditions contained in this document and SCC are to be read fully before submission of quotations.		**Non Deviatable**
E	Bidders are advised to comply with ITB and SCC, should there be any deviations (where deviations are permitted), it shall be entered in the deviation column. BHEL reserves the right to reject such offers or load the bid suitably for evaluation.		**Non Deviatable**
F	Offers shall be submitted directly, only by the bidder or by their authorized representative / agent and the offer should be in line with the regulatory guidelines (i.e. A valid Agency agreement between principal bidder and agent / representative shall be attached and the agreement shall cover the scope of services rendered by Agent, Agency Commission and any other information called for as per the regulatory guidelines). OEM / Mill details shall be provided if bidder is not a manufacturer. Bid envelops shall bear the name of Bidder. In case of submission through authorized representative/agent, the name of representative/agent should also be mentioned apart from bidder name.		**Non Deviatable**
G	Offer received after the specified time and date of submission will be rejected. No further correspondence shall be entertained.		**Non Deviatable**
H	Unsolicited offers will not be considered.		**Non Deviatable**
4	**OTHER PARTICULARS (Please indicate applicable data)**		
A	Name of the Bid currency (freely tradable foreign currency for imports and Indian Rupees for indigenous purchase).		
B	Name of the Port of loading and Port of Discharge (applicable to imports).		

5	**BID SUBMISSION PROCEDURE FOR CONVENTIONAL TENDER:**		
A	**For Single Part Bids:**		
	The complete bid shall be submitted in a single sealed cover superscribing the Tender number and due date, addressed to Sr DGM/CMM, Vendor Complex, BHEL, Hyderabad and sent by appropriate mode to above address or dropped in tender box located at vendor complex on or before the specified time and date of submission of offers, preferably in the bidder's envelope. E- mail bids shall be sent to mail ID pricebid_hyd@bhel.in only as an attachment.		**Non Deviatable**
B.	**For two-Part Bids:**		
i	The offer is to be submitted in two parts viz., Techno-commercial Bid - (Part-I), with all technical specification & scope including bill of material etc., Earnest Money Deposit (EMD)(wherever applicable) and unpriced bid with all applicable Commercial Terms and Conditions, rates of agency commission, duties, taxes and other charges, Signed and Stamped ITB and SCC, <u>except the price,</u> shall be kept in a separate sealed cover, superscribing enquiry No. (Techno-Commercial Bid) and due date AND Price Bid (Part-II), containing ONLY the price (including agency commission, if any) and the applicable duties/taxes/other charges shall be kept in a separate sealed cover superscribing Enquiry no. (Price bid) & due date. Both the above covers (Part –I & II) shall be kept in a Third cover superscribing Enquiry no. & due date. Bidder can also submit offer through email. Technical offer to be submitted to mail ID technicalbid_hyd@bhel.in, and price bid to be submitted to mail ID pricebid_hyd@bhel.in only as an attachment. Interchanging the information in the mails may lead to rejection of the offer. Bidder shall have no claim on e-mail offers sent to any other e-mail ID. In case of e-mail offers, the mail subject should contain Enquiry Number, Due date and Bidder name. Bidder address including contact details shall be mentioned in the content of the mail. Without these details, the offer is liable for rejection. All techno commercial terms & conditions mutually agreed prior to price bid opening shall prevail and supersede any terms and conditions specified otherwise in price bid.		**Non Deviatable**
ii	The bidders whose bids are techno commercially not accepted will be informed and EMD shall be returned wherever submitted.		
iii	Bidders will be allowed to submit the impact on their quoted prices due to changes in technical scope, specifications, and commercial terms/conditions as specified in NIT which in the opinion of BHEL , warrant changes in prices.		**Non Deviatable**
C	Bids shall be opened on due time and date in the presence of bidders who may like to be present. Only one representative of each bidder shall be permitted to attend the bid opening. Only the price bids of bidder (in case of two part bid) whose techno commercial bids are accepted will be opened later on a specified date.		**Non Deviatable**
6	**DELIVERY TERMS**		
A	**Indigenous Purchase**		
	a. Terms of Delivery for dispatches to BHEL Hyderabad (HPEP) shall be FOR Destination. b. Terms of Delivery for Direct Dispatch (DD) items shall be Ex Works. i. Incase specified in SCC that insurance is in customer/BHEL scope, price quoted shall include Freight charges up to Destination. ii. Otherwise, price quoted shall include Freight and Insurance upto Destination. However, beneficiary for insurance shall be BHEL.		
B.	**Imports**		
	The goods shall be delivered on FCA capital airport basis in case of freight by Air and CIP basis in case of freight by Sea.		
7	**Documentation for Payment**		
A	**Indigenous Purchase**		
	Following documents shall be submitted immediately on dispatch of material to BHEL HPEP / Site a. Original Tax Invoice (Refer ITB clause no 11 for Tax Compliance) b. Packing List - clearly showing number of packages, gross weight and net weight. c. Test/Warranty/Guarantee certificates, O&M Manual (If specified in SCC) d. Insurance intimation/declaration certificate e. Pre-dispatch Inspection report /Third Party Inspection Certificates. f. Consignee copy of LR signed & stamped by Customer/Site representative for DD Items g. e-waybill h. Any other documents as specified in SCC. Softcopies of the above documents shall be uploaded in Pradan portal https://hpep.bhel.com/mm immediately after dispatch of the material.		**Non Deviatable**

B	**Imports** i) Bidder shall inform BHEL the readiness of material along with packing details 30 days in advance from the date of delivery. For Hazardous cargo/DG cargo, supplier must provide the following documents prior to handing over shipment to freight forwarder, wherever freight is in BHEL scope: 1. Valid MSDS 2. DGD certificate with appropriate UN numbers. 3. Labelling and marking on DG cargo along with photo of packaging. 4. Self-declaration for consignment 5. Packaging Certificate as per DG Standards 6. TSA Approved Truckers details to be provided to forwarder at the time of shipment In addition to the above, supplier should ensure to comply all IATA DG regulations, if any new requirement is added in future. ii). Bidder shall also upload the soft copy of the dispatch documents consisting of BL / AWB, Invoice, delivery note, packing list, country of origin & Test certificates and other documents as specifically indicated in the SCC in PRADAN Portal (https://hpep.bhel.com/mm) within Five days from the B/L date for sea shipment and One day from AWB date for Air shipment and sent to email ids: mssea@bhel.in, msair@bhel.in, cmmfe@bhel.in. iii) AWB/BL must contain the information of BHEL GST no., and PAN no. iv) **Air Shipments:** Bidder shall ensure the following a) Port of discharge -- Mumbai/Chennai/Hyderabad (as indicated in SCC). b) Consignee shall be BHEL, Hyderabad. Material shall be air freighted through cargo mode only and not through Courier. c) Upon handing over the cargo to the forwarder, bidder shall ensure the acknowledgement receipt with wordings" Cargo handed over in sound condition for Air freighting". Note: Warehouse receipt will not be considered for penalty calculations. d) In case of CIF/ shipments, bidder shall also inform BHEL the information about discharge port agent details and cargo arrival information within one day from the date of Shipment. e) Following dimensions of single package may be noted. i). Maximum dimension of the cargo(ODC) -- 125" x 88" x 63" ii). Maximum weight of the cargo -- 3.5 MT. If any package dimension or weight exceeds the above set limits, it will be treated as Over Dimension Cargo (ODC) or Over Weight Cargo and bidder shall inform BHEL 30 days in advance to the delivery date to enable BHEL to finalize the freight forwarder. f). If package falls under Hazardous category, bidder shall communicate BHEL 30 days in advance period with document support. v) **Sea Shipments:-** bidder shall ensure the following a). Port of discharge -- Nhavaseva/Mumbai/Chennai. b). Place of Delivery / Final Destination for CIP shipments - Nhavaseva CFS / Chennai CFS. c). In case of FOB shipments, bidder shall handover the material to BHEL nominated forwarder and obtain the cargo receipt. d). If the material cannot be containerized in 20 or 40 GP containers, an advance information of 30 days prior to the delivery date shall be communicated to BHEL for necessary arrangements and finalisation of freight forwarder. e). **For CIP shipments** 1. In case of FCL shipments, Detention free period must be 14 days. 2. Bidder shall also inform BHEL the information about discharge port agent details and cargo arrival information within 5 days from the date of Shipment. 3. No charges for the services rendered till place of destination will be payable by BHEL. Incase liner / forwarder insist for charges, not in the scope of BHEL, the same will be adjusted from bidder account. 4. In case of CIF shipments -- Bidder must select a forwarder/liner whose discharge port published tariff for THC and other services is available. Any charges over and above the published tariff will not be borne by BHEL or will be adjusted from the bidder's bill. 5. bidder must insure the cargo for 110% of material value including the freight amount. (vi). Recovery charges for non-submission of documents: - Bidder shall submit all the required documents to BHEL as prescribed in the Purchase order and NIT. If BHEL incurs any charges such as Penalty, demurrage, container detention, wharfage, storage, Ground rent etc., due to non - compliance / non - submission of documents prescribed in Purchase Order/ NIT/Letter of credit, the same shall be recovered from the bidder as under: 1. EUROPE/USA/Black Sea/ Far East/Middle East/South East sector A. **For FOB Sea Consignments:-** Penalty for late submission / negotiation of documents beyond 14 days shall be as under:		

Sl. no	Period (From Date of Bill of Lading)	Recoverable Charges	Recoverable Charges per day per container	
		LCL per week/ Break bulk cargo per day	20FT Container	40FT Container
i	Upto 14th day	Nil	Nil	Nil
ii	15th day onward	USD 10	USD 110	USD 200

B. **For CIP Sea Shipments: -**
Bidder shall provide rates for detention charges after free period at the time of offer itself in case of engagement of 20FT Container and 40FT category. In case of late presentation of documents to the bank recovery will be effected from the Bidder as per the rates quoted by the Bidder at the time of offer in this regard.
In case of Break bulk cargo and LCL, Demurrage charges shall be recovered at the rate of USD 1 per Ton per day and storage charges at the rate of USD 10 per week respectively shall be charged as late presentation charges.

(vii) Description of items in invoice, packing list, BL / AWB or LR shall be same as PO item description. Bidders shall ensure that invoice shall contain PAN nos. of both bidder and BHEL along with other tax related numbers. BHEL PAN AAACB4146P and BHEL TAN HYDB00086C Any other additional documents sought by the statutory authorities, the same shall be produced by the bidder on priority basis.
(viii) Bidder shall provide package details including number of packages, gross weight, net weight etc.

(ix) The bidder shall provide the following documents at the time of submission of offer:
a) No Business Connection in India declaration issued by the bidder as per the format specified. (or)
b) (i) No Permanent Establishment in India declaration issued by the bidder as per the format specified.
(ii) Tax Residence Certificate issued by the bidder's tax authorities.
(iii) Form 10F, as attached in Annexure V, to be issued by the bidder.
c) In case the bidder has a Business Connection in India as per Section 9 of Income Tax Act or significant economic presence in India as per rule 11 UD of IT Act or Permanent Establishment in India as per Article 5 of Double Taxation Avoidance Agreement between India and the bidder's country, the bidder shall provide a withholding tax order issued by the Indian Income Tax authority for recovery of applicable tax.

8	**Delivery Schedule**		
	The tendered goods shall be delivered within the period stipulated in NIT/ SCC as accepted. Inordinate delay/early supply are liable for rejection/Hold on payment.		**Non Deviatable**
9	**Pricing Terms**		
	Quoted price shall be inclusive of Packing & Forwarding and shall remain firm and valid during the execution of PO. Offers with PVC will be rejected outright except in cases where specifically called for in the SCC.		**Non Deviatable**
10	**PRICE VALIDITY :**		
	Unless otherwise specified, offer shall be valid for a period of 90 days from the date of bid opening (Technical bid /part-I in case of two part bid). However the prices quoted for spare parts of the Main equipment shall be kept valid for a period as specified in SCC.		**Non Deviatable**
11	**Taxes & Duties (RATE TO BE INDICATED by the bidder against the space provided)**		

			Non Deviatable
A	**Indigenous Purchase** i) Only valid GST registered bidders will be considered for the tender. The GSTIN of the bidder should be clearly mentioned in the offer. ii) If bidder is exempted from GST registration under any provision of the GST Law, a declaration with due supporting documents should be furnished for considering the offer. iii) Bidder to quote the applicable taxes in the following manner: - Harmonized System of Nomenclature (HSN) of Goods - Services Accounting Code(SAC) of Services. - IGST/CGST/SGST/UTGST: Rate of Tax to be quoted as extra in % against the space provided iv) Bidders to ensure correct applicability of IGST/CGST/SGST/UTGST based on the Inter / Intra state movement of goods/services. v) In case Bidder has opted for GST Composition Scheme, the same may be stated explicitly both in their technical and price bids. An undertaking to the effect that any change in the status of the bidder will be intimated. vi) Any other taxes & duties not covered anywhere above may be indicated separately. **Taxes deducted at source:** - TDS as per the extant statutes shall be deducted. - In case bidder does not provide PAN details, higher rate of tax shall be deducted as per the Act. - Concessional certificates, if any, should be provided well in time for lower deduction of tax.		
	Terms & Conditions to be complied 1. All invoices (incl. Credit Notes, Debit Notes) to contain BHEL HPEP GSTIN ie 36AAACB4146P1ZG. Invoices submitted should be in the format as specified under GST Law. All details as mentioned in Invoice Rules including Dealer GST registration number (GSTIN), invoice number with date of issue, quantity, rate, value, taxes with nomenclature – CGST, SGST, UGST, IGST mentioned separately, HSN Code / SAC Code etc. 2. Reimbursement of GST amount will be made only upon completion of the following: i. Bidder declaring such invoice in their GSTR-1 Return/ IFF ii. Receipt of Goods or Services and Submission of Tax invoice by BHEL iii. The tax invoice is reflected in the GSTR2B of BHEL, HPEP (buyer). Payment of GST will be made only if it is matching with data uploaded by the Bidder in GST portal. 3. In case of discrepancy in the data uploaded by the bidder in the GSTN portal vis-a-vis the tax invoice or in case of any shortages or rejection in the supply, then BHEL will not be able to avail the tax credit. The same would be available in PRADAN Portal for the bidder's information. Bidder has to rectify the data discrepancy in the GSTN portal or issue credit note or debit note (details also to be uploaded in GSTN portal) for the shortages or rejections in the supplies or additional claims for processing of such invoices. 4. In cases where invoice details have been uploaded by the bidder but failed to remit the GST amount to GST Department within stipulated time, then GST on the invoices in default will be recovered from the bidder along with the applicable interest. 5. In case GST credit is delayed/denied to BHEL due to non/delayed receipt of goods and/or tax invoice or expiry of timeline prescribed in GST law for availing such ITC, or any other reasons not attributable to BHEL, such GST amount will be recoverable from bidder along with interest levied/ leviable on BHEL. 6. GST TDS deducted as per GST Act, is uploaded in GSTN portal along GSTR7. Bidders can directly download the GST TDS Certificate from the GSTN Portal. 7. Bidders to note that Rules & Regulations pertaining to E-way bill system are to be strictly adhered to, as and when notified by Govt. authorities. 8. Vendors who fall under the E-Invoice regulations, i.e., having an annual turnover of Rs. 10 crores **(Rs 5 crore w.e.f 01.08.2023)** in the previous year shall issue e-invoice in line with Rule 48(4) of CGST Rules failing which GST amount will not be reimbursed to the vendor even if the other requirements are fulfilled. 9. In case the vendor is exempted by the GST department under the Rule 48(4) of CGST Rules from issuing E-invoice, a declaration as prescribed in the Notification 17/2022 - Central Tax dated 01-08-2022 shall be provided on the invoice. 10. Vendors who do not fall under the E-Invoice regulations, i.e., whose annual turnover is less than Rs. 10 crores **(Rs 5 crore w.e.f 01.08.2023)** in the previous year have to give an undertaking indemnifying BHEL that the vendor is not falling under the E-invoice requirement category and that in case of any breach of this E-invoicing requirement, the vendor indemnifies BHEL of any consequences that may arise due to such a breach. 11. No GST shall be levied on liquidated damages / penalty.		
B.	**Foreign Purchase (Imports)**		

	The offered price shall be inclusive of all the Taxes and duties as applicable in country of export / country of dispatch for the quoted price. Taxes deducted at source: a. In case of goods or services subject to Income tax in India, such tax as per the extant statute shall be recovered. b. In case bidder does not provide necessary documents for beneficial taxation (Refer clause 7-B-(ix) a-c of ITB), the TDS deduction shall be at the maximum percentage stipulated as per the provisions of Income Tax Act.		**Non Deviatable**
12	**Payment Terms: Unless otherwise specified in SCC, following shall be the terms of Payment.**		
A	**Indigenous:** a. Micro & Small Enterprises (MSEs) - 100% Direct EFT payment within 45 days b. Medium Enterprises - 100% Direct EFT payment within 60 days c. Non MSME Bidders - 100% direct EFT Payment within 90 Days Note A. Above due date is reckoned from the date of Receipt of material or 15 days from the date of submission of complete set of documents as per PO whichever is later. Payment will be made on acceptance of Material. B. MSEs (covered under MSME Act) need to register and renew periodically and update the same with BHEL C. The taxes that are reimbursed are limited to applicable taxes as on the Purchase Order delivery date or the amount actually paid whichever is less. D. Adherence to the above time schedule of payment is contingent upon Bidder complying with GST provisions and availment of Input Tax Credit by BHEL before the date of payment. E. In case of packaged items, 10% of supply value will be retained till completion of total supplies. F. Bidders to comply with **clause 11** on GST requirements G. MSE benefits are not applicable to Traders/Wholesalers registered as MSEs		
B	**Imports:** i) 100% payment (less Indian Agency Commission, if any) shall be through Wire Transfer with a credit period of 60 days - Cash Against Documents (CAD) ii) In case Bidder opts for Letter of Credit payment, the LC Usance period shall be 90 days with respective bank charges to respective accounts and loading of 0.50% iii) Indian Agency commission if payable and so specified in the Purchase order shall be paid in Indian Rupees, considering the SBI TT selling exchange rate, as on the date of payment after successful completion of the contract.		
C	**Conditions for LC:** a. LC validity period will be 90 days and for any extension, applicable charges will be to bidder's account. b. LC will be opened after successful completion of pre dispatch inspection prior to the scheduled / agreed delivery date. LC will be opened within 15 bank working days from the date of request.		**Non Deviatable**
D	**Conditions for both Indigenous & Foreign Bidders:** a. In case Bidders insist for lesser Credit period and BHEL accepts, a loading of 0.60% for every 15 days reduction will be applicable. b. In case PBG as required is not furnished, Payment will be released deducting the BG amount, which will be paid after expiry of warranty period against submission of supplementary claim. c. Payment does not imply in any respect whatsoever a waiver of Buyer's right to performance of the Order. Buyer is entitled to set off claimable debts against claimable liabilities with the bidder by means of a setoff Note.		**Non Deviatable**
E	Wherever EMD is applicable, the EMD will be paid back to unsuccessful bidders within fifteen days after award of the contract. Successful bidder's EMD will be retained till submission of Performance Bank Guarantee (PBG). Tender Fee wherever applicable is not refundable. No interest shall be payable by BHEL on earnest money or security deposit or any money due to the contractor by BHEL.		**Non Deviatable**

13	**Penalty clause:**		
	In the event of delay in supply /part-supply of goods, Penalty as detailed below is leviable a. Penalty of 0.5% per week or part there of shall be levied, limited to a max of 10% (ten percent) of delayed portion value / order value (as specified in SCC). b. Penalty applicable for delay in documentation is as per SCC. c. Date Reckoned for Penalty - Indigenous Orders with delivery terms FOR HPEP: C Note date. - Indigenous Orders (Others): Date of e-waybill. - Imports: For CIP/CIF Orders: IGM date - Imports: For FOB Orders: AWB / BL date - Imports: For FCA/Ex Work Orders: Date of acknowledgement from Freight Forwarder. d. In case of Deviation to above Penalty clause, loading applicable to the extent to which not agreed by Bidder. e. Timelines as mentioned in the Annexure 1 will be considered for reckoning delivery. Penalty amount so determined along with applicable GST (for Indigenous orders) thereon shall be recovered. Imposition, recovery or settlement of this penalty shall not affect BHEL's right to performance, compensation and termination of the order.		
14	**Excess materials** supplied beyond tolerance limit as specified in PO will not be paid and bidder may raise credit note for the excess/unaccepted material as per GST law.		**Non Deviatable**
15	**Rejected materials**, if any, shall be collected by the bidder within 90 days of such communication to the bidder. Beyond this period the bidder forfeits their right to the materials.		**Non Deviatable**
16	**Guarantee / Warranty Period:** Wherever required, and so provided in the specifications/SCC/Purchase Order, the bidder shall guarantee that the goods supplied shall comply with the specifications laid down, for materials, workmanship and performance. a. Guarantee period shall be 12 months from the date of commissioning or 18 months from the date of supply whichever is earlier. b. In case erection & commissioning is involved, guarantee period shall be 12 months from the date of commissioning. c. In case of equipment bought as a package which are intended to be incorporated in installations or systems, the guarantee period shall be 12 months from the date of commissioning of such equipment. The guarantee period shall be extended by the period during which the goods are not in compliance. If the delivery is found to be non-complaint, bidder shall replace, repair or re-execute the as requested by BHEL. If the bidder defaults on his obligations, buyer has the right to proceed to replace, repair or re-execute at the bidder's expense. A guarantee period as described above shall apply afresh to replaced, repaired or re-executed parts of a delivery. **Loading for deviation:** In case warranty specified in SCC is over and above the period mentioned in b & c above; loading will be 1% per annum for the deviation in warranty end period, on the contract value. Expected commissioning period is as indicated in SCC.		**Non Deviatable**
17	**PERFORMANCE BANK GUARANTEE (PBG) (Applicable in case mentioned in SCC)** In case enquiry specifically spells out PBG requirement, PBG is to be submitted by Bidder in requisite format as per Annexure VII. Further detailing on PBG as specified in SCC. The PBG shall be for the performance of the goods and shall remain binding not withstanding such variations, alterations or extensions of item as may be made, give, conceded or agreed to between the Bidder and BHEL under these Terms and conditions or otherwise.		**Non Deviatable**
NOTE: Deviations (Commercial as well as Technical) from the tender specifications and conditions are generally not acceptable. However, deviation if any, shall be brought out clearly with proper justification in the offer. The deviation, if considered by BHEL, shall be loaded for comparison, while evaluating the offer. If a bidder unconditionally withdraws any deviation before price bid opening, the same shall not be loaded. Loading criteria in respect of major commercial conditions where deviations if any are accepted shall be as per clause No.18. ***The Bidders may specifically note the following.***			
18	**Evaluation and Loading Criteria:**		

i) Evaluation Currency for this tender shall be “INR”.
ii) Evaluation of prices shall be done item-wise unless otherwise specified in the SCC.
iii) Evaluation shall be on the basis of delivered cost, i.e. “Total Cost to BHEL” w.r.t the finalized technical scope and commercial conditions (after considering incidence of applicable taxes and duties and loading).
iv) In the course of evaluation, if more than one Bidder happens to occupy L1 status, effective L1 will be decided by soliciting discounts from the respective L1 Bidders. In case more than one Bidder happens to occupy the L1 status even after soliciting discounts, the L1 Bidder shall be decided by a toss/draw of lots, in the presence of the respective L1 Bidders or their representatives. Ranking will be done accordingly. BHEL decision in such situations shall be final and binding.

INDIGENOUS
a. Bidder shall ensure to indicate the applicable taxes against each line item, failing which the same will be considered as inclusive/NIL.
b. Ex-works offers received (as against FOR Destination mentioned in enquiry) shall be loaded by 2% of Ex-works value.
c. GST and any other charges quoted will be added to the base price. However, in case input credit is available for GST (SGST, CGST/IGST), the same shall be excluded for arriving at “Total Cost to BHEL"

IMPORTS
For evaluation of offers in foreign currency, exchange rate (TT selling rate of State Bank of India) as on the date of bid opening (Part-I, in case of two-part bids) shall be considered. If the relevant day happens to be a bank holiday, then the forex rate as on the previous bank (SBI) working day shall be taken.
In case of foreign Bidders, the quoted CIP price shall be loaded by the following factors to arrive at “Total Cost to BHEL":
- Import duty as applicable on the date of Part-I bid opening.

- Loading will be as per the table below

	Ex Works	FOB/FCA	CIF/CFR	CIP
Foreign Inland freight and insurance	2%			
Marine freight and marine insurance	3%	3%		
Destination Port handling charges	0.50%	0.50%	0.50%	
clearing charges & inland freight and insurance	2%	2%	2%	2%

COMMON LOADING FOR IMPORTS & INDIGENOUS that will be added for arriving the "Total Cost to BHEL"
A. Loading on Deviated Penalty clause shall be 10% or to the extent to which the bidder has opted for deviation.
B. Loading for payment terms as per clause 12 of ITB
C. Loading for deviation in Warranty & PBG as per clause 16,17.

19 Procurement directly from the manufacturers/ suppliers shall be preferred. However, no agent shall be allowed to represent more than one manufacturer/ supplier in the same tender. Moreover, either the agent could bid on behalf of the manufacturer/ supplier or the manufacturer / supplier could bid directly but not both. In case bids are received from both from the manufacturer/ supplier and the agent, bid received from the agent shall be ignored.

20 **RIGHT OF REJECTION /NON- PLACEMENT OF PO:** BHEL reserves the right to accept or reject any or all bid/s in full or part without assigning any reason whatsoever.

21 **INTEGRITY PACT**
Bidders shall have to enter into Integrity Pact with BHEL as per Annexure VI - for Tender value of rupees two crores and above and shall be signed by the authorized signatory along with the offer, failing which Bidder’s offer will be rejected.

22 **Public Procurement**

A **Make in India**
For this Procurement, the local content to categorize a bidder as a Class I local bidder / Class II local bidder / Non-Local bidder and purchase preference to Class I local bidder, is as defined in Public Procurement (Preference to Make in India) order No P-45021/2/2017-PP(BE-II) dated 04-06-2020 issued by DPIIT as amended from time to time.
Proforma for self-certification for minimum local content and auditor’s certification is given in Annexure III.

B Any Bidder from a country which shares a land border with India will be eligible to bid in this tender only if the bidder is registered with competent authority. GOI website https://www.mea.gov.in/ to be referred for latest details of competent authority and exemptions .
Proforma for self-certification for compliance is given in Annexure IV.

C **Startups:**
For Start-ups duly registered with DPIIT (Copy of certificate to be provided), condition of prior turnover and prior experience in Public Procurement may be relaxed subject to meeting of Quality and Technical Specifications. Startups are exempt from paying EMD.

23 **Benefits earmarked for Purchase from Micro & Small Enterprises (MSEs) – Indigenous Purchase**

A All Micro and Small Enterprises (MSEs) as defined in MSE Procurement Policy are exempt from Paying EMD.
NSIC/UDYAM registered bidders shall submit NSIC/UDYAM Certificate along with bid documents. Date to be reckoned for determining the deemed validity will be the last date of Technical bid submission. Non- submission of such document will lead to consideration of their bid, at par with other bidders and MSE status of such bidders shall be shifted to Non- MSE Category till the bidder submits these documents.

B	In tender, MSEs quoting price within price band of L1+15% shall also be allowed to supply a portion of requirement by bringing down their price to L1 price in a situation where L1 price is from someone other than a MSE and such MSE shall be allowed to supply at least 25% of total tendered value. In case of more than one such MSE, the supply shall be shared proportionately. Out of these 25% minimum 3% shall be earmarked for MSEs owned by women and 6.25% for MSEs owned by SC/STs who submit the relevant documents.
C	If an enterprise falling under MSME category as defined in the Act, graduates to a higher category from its original category or beyond the purview of the Act, it shall continue to avail all non-tax benefits of its original category notified by the Ministry of Micro, Small and Medium Enterprise for a period of three years from the date of such graduation to the higher category.
D	BHEL HPEP is registered with RXIL (TReDS) platform. MSME bidders are requested to get registered with RXIL (TReDS) platform to avail the facility as per the GOI guidelines.
24	Inspection Measuring and Test Equipment (IMTE) used by the Bidder/ Contractor or sub-contractor shall be calibrated, maintained and controlled. Calibration shall be valid and IMTE maintained in sound condition during usage.
25	ISO-9001, ISO14001 & OHSMS 45001 shall be complied.
26	If BHEL registered supplier is not quoting against this NIT, supplier shall send regret letter positively with valid reasons for not participating. Repeated lack of response on the part of supplier may lead to deletion of such registered supplier from BHEL's approved supplier's list as per BHEL SEARP Guidelines.
27	**Risk Purchase clause:** In case bidder fails/delays to supply whole or part of the ordered items or supplies defective items or fails to fulfil any other terms and conditions given in Purchase Order/Contract, BHEL has the right to terminate the order/contract or withdraw balance scope of work/supply and make the purchase of such material / services from elsewhere at the risk and cost of the defaulted bidder. The bidder is liable for the additional expenditure / difference in Cost, if any, including consequential losses which BHEL may sustain by reason of risk purchase in addition to the applicable LD as per the order/contract. Non-performance of contract attracts penal provisions in line with BHEL guidelines for Suspension of Business Dealings (SBD).
28	Any other terms and conditions of the bidder attached / referred against the tender enquiry will not be considered.
29	All drawings, patterns and tools supplied by BHEL or made at BHEL's expense are BHEL's property. These cannot be used or referred to any other party and must be used only in the execution of BHEL's orders.
30	Any amount payable by the bidder under any of the conditions of this contract shall be liable to be adjusted against any amount payable to the bidder under any other work / contract awarded by BHEL HPEP or any other BHEL Units. This is without prejudice to any other action as may be deemed fit by BHEL.
31	The bids of the bidders who are on the banned list and also the bids of the bidders, who engage the services of the banned firms, will be rejected. The list of firms banned by BHEL is available on BHEL web site: www.bhel.com
32	**Ordering and confirmation of order**
	The bidder shall send the order acceptance within one week from the date of LOI/Purchase order or such other period as specified/agreed by the Buyer. Buyer reserves the right to revoke the order placed if the order confirmation differs from the original order placed. Buyer shall be legally bound, only if agreed for any deviation explicitly in writing. The acceptance of deliverables or supplies by Buyer as well as payments made in this regard shall not imply acceptance of any deviations. The Purchase order will be deemed to have been accepted if no communication to the contrary is received within one week (or the time limit as specified /agreed by the Buyer) from the date of P.O. Buyer, is at liberty to send signed P.O. through electronic media such as e-mail and the receipt of which shall be treated as receipt of order.
33	**Execution**
	The whole contract is to be executed in the most workman like manner, substantial and approved as per the contracted terms.
34	**Progress Report**
	The bidder shall render such report as to the progress of work and in such form as may be called for by the Buyer from time to time. The submission and acceptance of such reports shall not prejudice the rights of the buyer in any manner. Bidder shall communicate to BHEL immediately, the change of address, ownership, contact person(s), the mobile numbers and e-mail of the dealing person concerned. Milestones shall be periodically updated by bidder through PRADAN Portal **(https://hpep.bhel.com/mm/).** Non updation will adversely affect service rating of bidder performance.
35	**Non-disclosure Obligations**

	Drawings, technical documents or other technical information received by one party shall not without the consent of the other party, be used for any other purpose than that for which they were provided. They may not, without the consent of the submitting party, otherwise be used or copied, reproduced, transmitted or communicated to third parties. All information and data contained in general product documentation, whether in electronic or any other form, are confidential and binding only to the extent that they are by reference expressly included in the contract. The bidder shall, as per agreed date/s but not later than the date of delivery, provide free of charge any information and/or drawings which are necessary to permit the Buyer to erect, commission, operate and maintain the product. Such information and drawings shall be supplied as specified in technical specification. All intellectual properties, including designs, drawings and product information etc. exchanged during the formation and execution of the contract shall continue to be the property of the submitting party. The bidder shall provide Buyer with all information pertaining to the delivery in so far as it could be of importance to Buyer. The bidder shall not reveal confidential information to its own employees not involved with the tender/contract and its execution and delivery or to third parties, unless Buyer has agreed to this in writing beforehand. The bidder shall not be entitled to use the Buyer's name in advertisements and other commercial publications including website without prior written permission from Buyer. In the event of violation of the confidentiality as agreed, BHEL will take legal action as deemed fit. Non-disclosure agreement to be entered as per **Annexure- II** wherever applicable.

36	**Inspection and Testing**
A	The goods and stores shall be manufactured by approved quality system and each part/component may be inspected and tested by the Buyer prior to shipment and shall comply with relevant requirements. Buyer has the right to inspect at any stage during manufacture/ delivery.
B	Buyer or his authorized representative shall be entitled at all reasonable times during execution to inspect, examine and test at the bidder's premises the material and workmanship of all stores to be supplied under the contract, and if the part of the stores are being manufactured at other premises, the bidder shall obtain for buyer or his authorized representative permission to inspect, examine and test as if the said stores are being manufactured at the bidder's premises. Such inspection, examination and testing, if made shall not release the bidder from any obligation under the contract. For indigenous bidders all costs related to first inspection request shall be borne by the buyer and the cost of subsequent inspections due to non-readiness of material/rework/ rejections shall be borne by the bidder. In case of imports all inspection charges including third party inspections if any shall be borne by the bidder. The cost of inspection staff/third party specified by the Buyer shall be borne by bidder unless otherwise specifically agreed. If the contract provides for tests on the premises of the bidder or any of his sub-contractor/s, bidder shall be responsible to provide such assistance, labor, materials, electricity, fuels, stores, apparatus, instruments as may be required and as may be reasonably demanded to carry out such tests efficiently. Cost of any type test or such other special tests shall be borne by the bidder unless otherwise specifically agreed in the contract. The Bidder shall give the authorized representative of the buyer reasonable notice in writing of the date on and the place at which any stores will be ready for inspection/ testing as provided in the Contract. Annexure – I, may strictly be complied with for the time lines. Any delay in submission of the documents by the bidder will not alter the delivery date.
37	**Quality and Condition of the Deliverables**
	The bidder shall be responsible for compliance with applicable technical, safety, quality, environmental requirements and other regulations in relation to products, packaging and raw and ancillary materials.
38	**Packaging and Dispatch**
	The bidder shall package the deliverables safely and carefully and pack them suitably in all respects considering the peculiarity of the material for normal safe transport by sea/air/rail/road to its destination suitably protected against loss, damage, corrosion in transit and the effect or tropical salt laden atmosphere. The packages shall be provided with fixtures/hooks and sling marks as may be required for easy and safe handling by mechanical means. Special packaging conditions/ environmental conditions as defined in the NIT shall be fully complied. Each package must be marked with consignee name, address, P.O. number, Package Number, gross weight & net weight, dimensions (Lx B x H) and bidder's name. The packing shall allow for easy removal and checking of goods on receipt and comply with carrier's conditions of packing or established trade practices. Packing list for goods inside each package with P.O. item No. & quantity must also be fixed securely outside the box to indicate the contents. If any consignment needs special handling instruction, the same shall be clearly marked with standard symbols/instructions. Hazardous material should be notified as such and their packing, transportation and other protection must conform to relevant regulations.
39	**Contract variations; Increase or decrease in the scope of supply**
	Buyer may vary the contracted scope during execution due to exigencies of project requirement. If the bidder is of the opinion that the variation has an effect on the agreed price or delivery period, Buyer shall be informed of this immediately in writing along with technical details, and in the event of additional work, submit a quotation with regards to the price and period involved, as well as the effect this additional work will have on the other work to be performed by the bidder. Wherever unit rates are available in the contract, the same shall be applied to such additional work. The bidder shall not perform additional work before buyer has issued written instructions/amendment to the purchase order to that effect. The work which the bidder should have or could have anticipated in terms of delivering the service (s) and functionality (ies) as described in this agreement should be executed by the bidder without any price implication. In case of no change in the scope / technical specifications, bidder shall endeavor to keep the material ready and intimate the same to BHEL within the contractual delivery date, failing which, the delay if any will be attributed to supplier, and any upward price variation thereof for delivery at a later date is not admissible.
40	**Rejected/Short shipments/ warranty/guarantee replacements**
	In case of any short shipment during initial supply which is subsequently dispatched by the bidder or any guarantee / warranty replacements shall be dispatched on "DDP-Delivered duty paid BHEL stores" basis for imported items and "FOR-BHEL Stores/designated destination" basis for indigenous items.
41	**Export Administration Regulations**
	If a delivery includes such technology and / or supply that is subjected to the export regulations the bidder shall obtain due permissions, approvals, license etc.
42	**Force Majeure**

	The bidder shall not be considered in default if delay occurs due to causes beyond their control such as Acts of God, Natural calamities, Fire, Frost, Flood, Civil War, civil commotion, riot, Government Restrictions. Only those causes that have duration of more than seven days shall be considered cause of force majeure. Notification to this effect duly certified by local chamber of commerce/statutory authorities with supporting documents shall be given by the bidder to BHEL by registered letter/courier service immediately without loss of time. In the event of delay due to such causes the delivery schedule shall be extended for a length of time equal to the period of Force Majeure or at the option of BHEL the order may be cancelled. Such cancellation would be without any liability whatsoever on the part of BHEL. In the event of such cancellation the bidder shall refund any amount advanced or paid to the bidder by BHEL and deliver back any material issued to him by BHEL and release facilities, if any provided by BHEL.
43	**Non-waiver of Defaults**
	If any individual provision of the contract is invalid, the other provisions shall not be affected.
44	**Settlement of Disputes**
	Except as otherwise specifically provided in the contract, all disputes concerning questions of the facts arising under the contract, shall be decided by the Buyer, subject to written appeal by the bidder to the buyer, whose decision shall be final. Any disputes of differences shall to the extent possible be settled amicably between the parties thereto, failing which the disputed issues shall be settled through arbitration The bidder shall continue to perform the contract, pending settlement of disputes(s).
45	**Conciliation clause**
	CONCILIATION CLAUSE FOR CONDUCTING CONCILIATION PROCEEDINGS UNDER THE BHEL CONCILIATION SCHEME, 2018: The Parties agree that if at any time (whether before, during or after the arbitral or judicial proceedings), any Disputes (which term shall mean and include any dispute, difference, question or disagreement arising in connection with construction, meaning, operation, effect, interpretation or breach of the agreement, contract or the Memorandum of Understanding, penalty deduction, time extension), which the Parties are unable to settle mutually, arise inter-se the Parties, the same may, be referred by either party to Conciliation to be conducted through Independent Experts Committee to be appointed by competent authority of BHEL from the BHEL Panel of Conciliators. The proceedings of Conciliation shall broadly be governed by Part-III of the Arbitration and Conciliation Act 1996 or any statutory modification thereof and as provided in Procedure in http://www.bhel.com/index.php/story_details?story=2454 . The Procedure together with its Formats will be treated as if the same is part and parcel hereof and shall be as effectual as if set out herein in this ITB
46	**ARBITRATION (WITH SOLE ARBITRATOR)**
	Except as provided elsewhere in this Contract, in case amicable settlement is not reached between the Parties, in respect of any dispute or difference; arising out of the formation, breach, termination, penalty deduction, validity or execution of the Contract; time extension, or, the respective rights and liabilities of the Parties; or, in relation to interpretation of any provision of the Contract; or, in any manner touching upon the Contract, then, either Party may, by a notice in writing to the other Party refer such dispute or difference to the sole arbitration . Sole arbitrator to be appointed by Head of the Unit - BHEL , HPEP .
	The Arbitrator shall pass a reasoned award and the award of the Arbitrator shall be final and binding upon the Parties.
	Subject as aforesaid, the provisions of Arbitration and Conciliation Act 1996 (India) or statutory modifications or re-enactments thereof and the rules made thereunder and for the time being in force shall apply to the arbitration proceedings under this clause. The seat of arbitration shall be Sangareddy / Hyderabad, Telangana. The language of arbitration shall be English and the documents shall be submitted in English.
	The cost of arbitration shall initially be borne equally by the Parties subject to the final apportionment of the cost of the arbitration in the award of the Arbitrator.
	Subject to the arbitration in terms of clause 45, the courts at Sangareddy, Telangana State shall have exclusive jurisdiction over any matter arising out of or in connection with this contract. Notwithstanding the existence or any dispute or differences and/or reference for the arbitration, the Contractor shall proceed with and continue without hindrance the performance of its obligations under this Contract with due diligence and expedition in a professional manner except where the Contract has been terminated by either Party in terms of this Contract.
	ARBITRATION FOR CONTRACT WITH PUBLIC SECTOR ENTERPRISE (PSE) OR A GOVERNMENT DEPARTMENT
	In the event of any dispute or difference relating to the interpretation and application of the provisions of commercial contract(s) between Central Public Sector Enterprises (CPSEs/ Port Trusts inter se and also between CPSEs and Government Departments/Organizations (excluding disputes concerning Railways, Income Tax, Customs & Excise Departments), such dispute or difference shall be taken up by either party for resolution through AMRCD as mentioned in DPE 0M No 4(1)/2013-DPE(GM/FTS 1835 dated 22-05-2018
47	**Applicable Laws and jurisdiction of Courts**
	This agreement shall be construed and interpreted in accordance with the laws of India and shall have exclusive jurisdiction of Sangareddy/Hyderabad courts, Telangana, India.
48	**BHEL-Fraud prevention policy shall be adhered to.**
	The Bidder along with its associate/ Collaborators/ Sub-contractors/ sub-bidders/ consultants/ service providers shall strictly adhere to BHEL Fraud Prevention policy displayed on BHEL Website http://www.bhel.com and shall immediately bring to the notice of BHEL management about any fraud or suspected fraud as soon as it comes to their notice. List of nodal officers is hosted on BHEL Hyderabad website https://hpep.bhel.com/.
49	**Suspected Cartel Formation**
	The Bidder declares that they will not enter into any illegal or undisclosed agreement or understanding, whether formal or informal with other Bidder(s). This applies in particular to prices, specifications, certifications, subsidiary contracts, submission or non-submission of bids or any other actions to restrict competitiveness or to introduce cartelization in the bidding process. In case , the Bidder is found having indulged in above activities, suitable action shall be taken by BHEL as per extant policies / guidelines .
50	**Conflict of Interest:** "A bidder shall not have conflict of interest with other bidders. Such conflict of interest can lead to anti-competitive practices to the detriment of Procuring Entity's interests. The bidder found to have a conflict of interest shall be disqualified. A bidder may be considered to have a conflict of interest with one or more parties in this bidding process, if:

	a) they have controlling partner (s) in common; or b) they receive or have received any direct or indirect subsidy/ financial stake from any of them; or c) they have the same legal representative/agent for purposes of this bid; or d) they have relationship with each other, directly or through common third parties, that puts them in a position to have access to information about or influence on the bid of another Bidder; or e) Bidder participates in more than one bid in this bidding process. Participation by a Bidder in more than one Bid will result in the disqualification of all bids in which the parties are involved. However, this does not limit the inclusion of the components/ sub-assembly/ Assemblies from. one bidding manufacturer in more than one bid; or f) In cases of agents quoting in offshore procurements, on behalf of their principal manufacturers, one agent cannot represent two manufacturers or quote on their behalf in a particular tender enquiry. One manufacturer can also authorize only one agent/dealer. There can be only one bid from the following: 1. The principal manufacturer directly or through one Indian agent on his behalf; and 2. Indian/foreign agent on behalf of only one principal; or g) A Bidder or any of its affiliates participated as a consultant in the preparation of the design or technical specifications of the contract that is the subject of the Bid; or h) In case of a holding company having more than one independently manufacturing units, or more than one unit having common business ownership/management, only one unit should quote. Similar restrictions would apply to closely related sister companies. Bidders must proactively declare such sister/ common business/ management units in same/ similar line of business. "

Note: Purchase officer has to fill Annexure-I while sending enquiry

(Attachment to Rate Contract					
Special Conditions of Contract (SCC) Rev 01					
Sl.No	**ITB Clause No.**	**Clause**	**Available Options**	**BHEL requirements**	**Bidder response**
1	3	Mode of Submission	Conventional / E-Procurement	Conventional (Email)	
2	5	Type of Bid	Single part / Two Part / Three Part	Two Part	
3	6	Indigenous purchase - Destination	BHEL, RCPuram, Hyderabad / Site	Site Projects	
4			Destination in case of Site	Site Projects	
		Mode of Shipment	Air / Sea	Road/Sea	
5		Imports purchase - Destination	Mumbai / Navasheva / Hyderabad / Others	NA	
6		Freight	Customer / BHEL / Vendor	Vendor	
7		Insurance	Customer / BHEL / Vendor	BHEL	
8		**Basic Custom Duty**	Project Imports/ Concessional Duty / Merit Duty / Nil / Others _____Duty Structure	NA	
9	9	Price validity	_____ days	180 Days	
		Optional Spares price validity	_____ Months / years from the date of _____	As per tender documents	
10	8	Delivery Period	___ weeks / ___ Months (Staggered delivery to be detailed)	As per tender documents	
11	18	Evaluation basis	Itemwise / Total	Total (Overall L1)	
12	Others	Quantity Split	Splittable / Non-Splittable	Non-Splittable	
13			(Tabulation for splitting to be detailed)	Not applicable	
14	9	Price Variation Clauser (PVC)	Applicable / Not applicable	Not applicable	
15	12	Payments Terms	As per ITB13	Applicable	
16		Tender cost	Applicable / Not applicable	Not applicable	
17		Earnest Money Deposit (EMD)	__% of tender value / Not applicable	Not applicable	
18		E & C Supervision Charges	Applicable / Not applicable	Not applicable	
19	Others	Contract execution Bank Guarantee	__% of PO Value to be submitted after receipt of PO / Not Applicable	Not applicable	
20	17	Performance Bank Guarantee		Not applicable	
	7	Additional documentation for payment	Test / Warranty / Guaranty / O&M Manual etc.,	As per tender documents	
21	13	Max Penalty applicable on	Delayed portion / Order value	As per tender documents	
22	Others	Contract Specific Penalty Clause	including Documentation delay , Performance , E&C etc., to be detailed , considering Project , Unit , Set , etc.,	As per tender documents/Technical specification	
23	16	Guarantee / Warranty Period	Applicable Clause a/b/c	As per tender documents	
24		Contract Specific Guarantee / Warranty Period	Specific period if any to be detailed	As per tender documents	
25	Others	Customer approval of vendor	Applicable / Not applicable	Applicable	
26		Drawing approval	Applicable / Not applicable	Applicable	
27		QAP approval	Applicable / Not applicable	Applicable	
28	36	Inspection by	BHEL / BHEL TPI / Vendor TPI / Customer	Applicable	
29	Others	Financial / Commercial PQC	Applicable / Not applicable	Applicable	
30			if Applicable to be detailed	As per tender documents	

Note:

In case any BHEL requirement is not mentioned/specified above, that will be as per BHEL tender documents.

Sl.No.	Annexure-C for Commercial Terms and Conditions	SUPPLIER COMMENTS: REQUESTED TO OFFER EITHER CONFIRMED OR ACCEPTED OR REMARKS IF ANY DEVIATION IS TAKEN
1	Terms of Delivery and Location : FOR Destination: Destination is RESPECTIVE SITE (Cost, Packing, Forwarding ,Freight etc., are in Supplier's scope i.e. included in the quoted prices.Transit Insurance in BHEL Scope), non acceptance of terms of delivery is laible to rejection. Evaluation will be done on grand total Package basis and Total cost to BHEL.	Non-Devaitable
2	Quoted currency should be in Indian Rupee(INR) only.	
3	Delivery Period:To mention clearly the exact delivery period from date of approved drawing or QAP whichever occurs later. Any delay in submission of documents and approval from BHEL/Customer will be calculated as per Annexure-I	
4	Terms of payment:As per ITB13	Non Devaitable
5	**Material Quantity mentioned in the enquiry documents are projected quantity for next two years. Based on Customer requirement and scope finalisation,Materail code and instruments quantity for some projected quantities may vary during PO placement. Vendor is requested to submit the prices of the individual list of Instruments and Hook up lines available with enquiry documents. Same will be considered for price finalisation (in case of any change in no of instruments). Price of list of instruments should be submitted along with price bid.In case of any clarification required, please take confirmation before technical bid opening.**	
6	Custmer approved vendor list is applicable for the instruments.In case of any clarification required, please take confirmation before technical bid opening.	
7	Guarantee Certificate :As per Technical Specification/ITB13	
8	Warranty shall be as per technical specification	
9	Inspection before despatch: Inspection before despatch at supplier's works by BHEL / BHEL appointed .Inspection agency / Customer / Customer appointed inspection agency.	
10	Firm Price: Prices shall be kept firm till completion of supplies and acceptance of materials at BHEL Project Sites/Stores.	
11	MSE / Non MSE Status with support documents.	
12	Contact details of bidders: Contact persons Name/Designation/Mobile No/Email ID/Fax No/Phone No.etc. should be furnished.	
13	Pointwise conformation/acceptance or comments to our technical specification is must and Each page shall be signed BY THE BIDDER and affixed the official seal.	
14	Risk Purchase Clause:Supplier Confirmation is Required.Non acceptance to risk purchase clause may leads to rejection of offer. Hence bidders are requested to accept risk purchase clause and no clarification on this will be entertained.	
15	In case of ambiguity between Customer/BHEL specification, Please take the confirmation before technical bid opening.	
16	Vendor shall duly filled and submit the MII local content delcaration form as given in the tender.	
17	Vendor shall duly filled and submit the eligibility criteria form as given in the tender.	
18	Rate contract is valid for the PO placement within rate contract period (02 years from the date of finalisation of Rate Contract)	
19	For any technical query please mail to narendrakmr@bhel.in, nandgopal@bhel.in,gcsahoo@bhel.in	

BHARAT HEAVY ELECTRICALS LIMITED
HEAVY POWER EQUIPMENT PLANT
PURCHASE DEPARTMENT/PUMPS
RAMACHANDRAPURAM, HYDERABAD

Ref:F7/RC/24-26/LGB ASSEMBLY:PRICE BID

Sl.No	Material Code	Project	Material Description	Quantity	Unit Price without GST	Total Price without GST
1	FP9750588193	8x800 MW Adani Projects	LGB ASSLY WITH INSTRUMENTS-VAR NO 19	8		
2	FP9750588355		LGB ASSY FOR LO SERVICE(TD) INST-VAR 35	16		
3	FP9750588410		LGB FOR 3 CEPS-660/800 MW	8		
4	FP9750588479		LGB ASSEMBLY - VAR NO.47	8		
5	FP9750588541		LGB ASSY FOR FW SERVICE INST-VAR54	24		
6	FP9750588550		LGB ASSY FOR SW&CW SERVICE TDBFP-VAR55	16		
7	FP9750588568		LGB ASSY FOR SW&CW SERVICE MDBFP-VAR56	8		
8	FP9750588576		LGB ASSY FOR DRIP PUMP INST-VAR57	8		
9	FP9750588541	NTPC LARA NTPC SINGRAULI	LGB ASSY FOR FW SERVICE INST-VAR54	8		
10	FP9750588550		LGB ASSY FOR SW&CW SERVICE TDBFP-VAR55	8		
11	FP9750588355		LGB ASSY FOR LO SERVICE(TD) INST-VAR 35	8		
12	FP9750588541		LGB ASSY FOR FW SERVICE INST-VAR54	4		
13	FP9750588568		LGB ASSY FOR SW&CW SERVICE MDBFP-VAR56	4		
14	FP9750588479		LGB ASSEMBLY - VAR NO.47	4		

Sl.No	Material Code	Project	Material Description	Quantity	Unit Price without GST	Total Price without GST
15	FP9750588193		LGB ASSLY WITH INSTRUMENTS-VAR NO 19	4		
16	FP9750588410		LGB FOR 3 CEPS-660/800 MW	4		
17	FP9750588576		LGB ASSY FOR DRIP PUMP INST-VAR57	4		
18	FP9750588320	DVC Raghunathpur (2x660MW)	LGB ASSY FOR FW SERVICE INST-VAR 32	8		
19	FP9750588401		LGB 660MW TDBFP SW&CW AND LO SYS	4		
20	FP9750588398		LGB 660MW MDBFP SW&CW AND LO SYS	4		
21	FP9750588193		LGB ASSLY WITH INSTRUMENTS-VAR NO 19	2		
22	FP9750588410		LGB FOR 3 CEPS-660/800 MW	2		
Total Price without GST (Including all line items put together)						
Total Price with GST						