INVENTORY NO | SIGN. AND DATE | REF. DRG. NO. | COMPUTER DRG. PATH NAME :

COPY RIGHT AND CONFIDENTIAL
THE INFORMATION ON THIS DOCUMENT IS THE PROPERTY OF BHARAT HEAVY ELECTRICALS LIMITED.
IT MUST NOT BE USED DIRECTLY OR INDIRECTLY IN ANY WAY DETRIMENTAL TO THE INTEREST OF THE COMPAY

FIRST ANGLE PROJECTION (ALL DIMENSIONS ARE IN MM.)

DRG. NO. TB202407-1002453-SC3540-765kV-ELEC-LAY

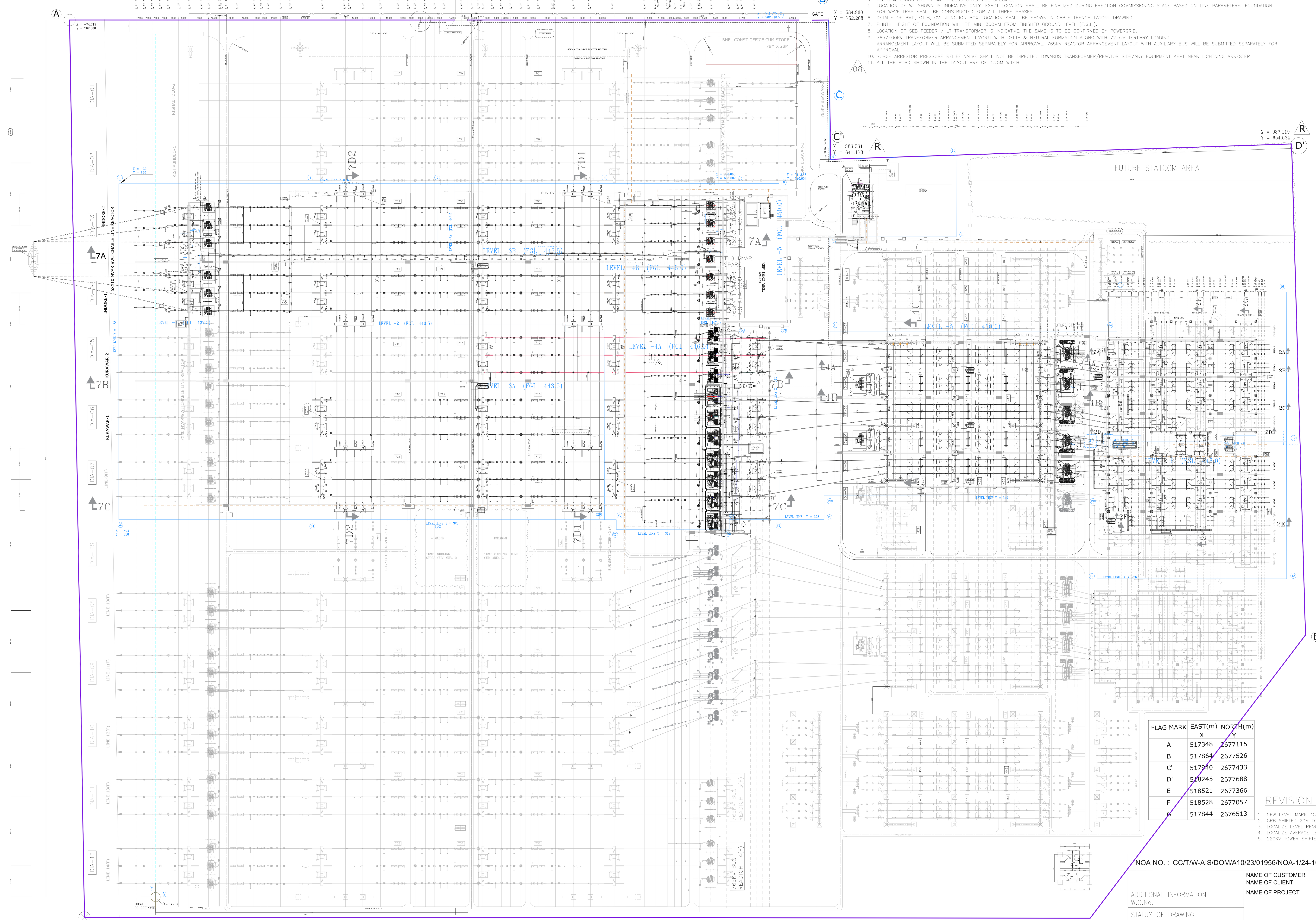

NOTES:

1. DEAD END TOWER ERECTION AND OUTGOING STRINGING OF LINE CONDUCTOR & SHIELD WIRE ARE NOT IN BHEL SCOPE BUT CONNECTION OF EQUIPMENT TOWARDS LINE SIDE SHALL BE DONE BY BHEL. SUPPLY OF TENSION INSULATOR STRING ON LINE SIDE OF TAKE OFF GANTRY IS IN BHEL SCOPE OF WORK INCLUDING TENSION CLAMP FOR EARTHWIRE.
2. SUPPLY ERECTION, TESTING, COMMISSIONING OF 765KV REACTOR & 400KV TRAFO INCLUDING (OLTC) & (NGR, 120kV LA), IS NOT IN BHEL SCOPE. HOWEVER, FORMATION OF HV, LV, TERTIARY, NEUTRAL & AUXILIARY BUSES ALONG WITH BPI & ITS STRUCTURE EARTHING AND ASSOCIATED CIVIL WORKS IS COVERED IN SCOPE OF WORK BUT 765KV AUX BUS ROUTING FOR 80MVAR & 110MVAR REACTOR IS NOT IN SCOPE AF BHEL.
3. FIRE RESISTANT WALL BETWEEN 765kV TRANSFORMER UNITS AND 765kV REACTORS UNITS ARE IN BHEL SCOPE.
4. ALL DIMENSIONS ARE IN MM UNLESS OTHERWISE SPECIFIED
5. LOCATION OF WT SHOWN IS INDICATIVE ONLY. EXACT LOCATION SHALL BE FINALIZED DURING ERECTION COMMISSIONING STAGE BASED ON LINE PARAMETERS. FOUNDATION FOR WAVE TRAP SHALL BE CONSTRUCTED FOR ALL THREE PHASES.
6. DETAILS OF BMK, CTJB, CVT JUNCTION BOX LOCATION SHALL BE SHOWN IN CABLE TRENCH LAYOUT DRAWING.
7. PLINTH HEIGHT OF FOUNDATION WILL BE MIN. 300MM FROM FINISHED GROUND LEVEL (F.G.L.).
8. LOCATION OF SEB FEEDER / LT TRANSFORMER IS INDICATIVE. THE SAME IS TO BE CONFIRMED BY POWERGRID.
9. 765/400KV TRANSFORMER ARRANGEMENT LAYOUT WITH DELTA & NEUTRAL FORMATION ALONG WITH 72.5kV TERTIARY LOADING ARRANGEMENT LAYOUT WILL BE SUBMITTED SEPARATELY FOR APPROVAL. 765KV REACTOR ARRANGEMENT LAYOUT WITH AUXILIARY BUS WILL BE SUBMITTED SEPARATELY FOR APPROVAL.
10. SURGE ARRESTOR PRESSURE RELIEF VALVE SHALL NOT BE DIRECTED TOWARDS TRANSFORMER/REACTOR SIDE/ANY EQUIPMENT KEPT NEAR LIGHTNING ARRESTER
11. ALL THE ROAD SHOWN IN THE LAYOUT ARE OF 3.75M WIDTH.

SYSTEM PARAMETERS

SL. No	DESCRIPTION OF PARAMETERS	220kV System	400kV System	765kV System
1	SYSTEM OPERATING VOLTAGE (RMS)	220kV	400kV	765kV
2	MAXIMUM VOLTAGE OF THE SYSTEM (RMS)	245kV	420kV	800kV
3	RATED FREQUENCY	50Hz	50Hz	50Hz
4	NO. OF PHASES	3	3	3
5	RATED INSULATION LEVELS			
i)	IMPULSE WITHSTAND VOLTAGE FOR - TRANSFORMER AND REACTORS - FOR OTHER EQUIPMENT - FOR INSULATOR STRINGS	±950kVp ±1050kVp ±1050kVp	±1425kVp ±1425kVp ±1550kVp	2100kVp 2100kVp 2100kVp
ii)	ONE MINUTE POWER FREQUENCY DRY AND WET WITHSTAND VOLTAGE (RMS)	460kV	630kV	975kV
6	MAX. RADIO INTERFERENCE VOLTAGE FOR FREQUENCY BETWEEN 0.5 MHZ AND 2 MHZ	1000 uV at 156kV rms	1000 uV at 266kV rms	2500 uV at 508kV rms
7	MINIMUM CREEPAGE DISTANCE - FOR INSULATOR STRINGS - FOR OTHER EQUIPMENT	7595 mm 6125 mm	13020 mm 10500 mm	24800 mm 20000 mm
8	MINIMUM CLEARANCES			
i)	PHASE TO PHASE	2100 mm	4200 mm	7600 mm
ii)	PHASE TO EARTH	2100 mm	3500 mm	4900 mm
iii)	SECTIONAL CLEARANCES	5000 mm	6500 mm	10300 mm
9	RATED SHORT CIRCUIT CURRENT	50 kA for 1 sec	63kA for 1 sec	50kA for 1 sec
10	SYSTEM NEUTRAL EARTHING	Effectively earthed	Effectively earthed	Effectively earthed
11	CORONA EXTINCTION VOLTAGE	NA	320kV	508kV
12	RATED AMBIENT TEMPERATURE	50 Deg. C	50 Deg. C	50 Deg. C

BILL OF QTY. FOR 765kV MAIN EQUIPMENTS:

SL.NO.	DESCRIPTION	RATING	S. C. RATING	NOA QTY. (NO.)	SLD QTY. (NO.)	SLD SYMBOL	LAYOUT SYMBOL	SCOPE OF SUPPLY	LEGEND	MAKE
1	500 MVA, (1-PH) AUTOTRANSFORMER	765/400/33KV	50 KA FOR 1 S.	10	10		(3 NOS)	POWERGRID	T	GE
							(3 NOS + 1 SPARE)	POWERGRID	T	HITACHI
2.a.	110MVAR LINE REACTOR (1-PH)	765KV	50 KA FOR 1 S.	6	6			POWERGRID	LR	HITACHI
2.b	110MVAR BUS REACTOR (1-PH)	765KV	50 KA FOR 1 S.	7	7			POWERGRID	BR	GE
2.c.	80MVAR LINE REACTOR (1-PH)	765KV	50 KA FOR 1 S.	-	-			POWERGRID	LR	--
3	NGR(400 Ohm) FOR REACTOR	145KV	N.A	2	2			POWERGRID	NGR	–
4	SF6 CIRCUIT BREAKER WITH CR, (3-PH)	3150A	50 KA FOR 1 S.	4	4# with CSD	*		BHEL	52	TBD
5	SF6 CIRCUIT BREAKER WITH CR,WITHOUT CSD (3-PH)	3150A	50 KA FOR 1 S.		2			BHEL	52	TBD
6	SF6 CIRCUIT BREAKER WITHOUT CR,WITH CSD (3-PH)	3150A	50 KA FOR 1 S.	7	5#	*		BHEL	52	TBD
7	SF6 CIRCUIT BREAKER (1-PH) (WITHOUT CR)	3150A	50 KA FOR 1 S.	1	1	P		BHEL	52	TBD
8	ISOLATOR WITH ONE E/S (3 PH) VERTICAL KNEE TYPE	3150A	50 KA FOR 1 S.	14	14			BHEL	89/89E	TBD
9	ISOLATOR WITH TWO E/S (3 PH) VERTICAL KNEE TYPE	3150A	50 KA FOR 1 S.	10	10			BHEL	89/89E1 /89E2	TBD
10	ISOLATOR WITH ONE E/S (1 PH) VERTICAL KNEE TYPE	3150A	50 KA FOR 1 S.	23	23			BHEL	89/89E1	TBD
11	ISOLATOR WITHOUT E/S (1 PH.) VERTICAL KNEE TYPE	3150A	50 KA FOR 1 S.	40	40			BHEL	89	TBD
12	CURRENT TRANSFORMER (1 PH.) WITH 120% EXTENDED CURRENT RATING.	3000A	50 KA FOR 1 S.	33	33			BHEL	CT	TBD
13	CVT (1 PH.)	8800pF	NA	12	12			BHEL	CVT	BHEL
14	SURGE ARRESTER (1 PH.)	624 kV	NA	29	29			BHEL	LA	TBD
15	WAVE TRAP (1 PH.) PEDESTAL TYPE.	1mH, 3150A	50 KA FOR 1 S.	04	04			BHEL	WT	TBD
16	CONTROLLED SWITCHING DEVICE FOR 765KV,3-PH CIRCUIT BREAKER	765kV	NA	8	9#	*		BHEL	CSD	TBD
17	765KV, 3150A, 50KA, 3PHASE CIRCUIT BREAKER WITHOUT CLOSING RESISTOR WITH CONTROL SWITCHING SUITABLE FOR 1-PH REACTOR SWITCHING	765kV	NA	2	2	*		BHEL	CB with CSD	TBD
18	765KV POST INSULATOR-8KN (EXCEPT WT)	765kV	-	100	50# (11)			BHEL		TBD
18	765KV POST INSULATOR(FOR WT)	765kV	-	12	12			BHEL		TBD

BILL OF QTY. FOR 400kV MAIN EQUIPMENTS (BHEL'S SCOPE):

SL. NO.	DESCRIPTION	RATING	S. C. RATING	NOA QTY. (NO.)	SLD QTY. (NO.)	SLD SYMBOL	LAYOUT SYMBOL	LEGEND	MAKE
1	125MVAR BUS REACTOR (3-PH)	420 kV	63 KA FOR 1 S.	2	2			BR	BHEL
2	SF6 CIRCUIT BREAKER WITHOUT CR (3-PH) WITH SUPPORT STRUCTURE	3150A	63 KA FOR 1 S.	15	10 with CSD	#		52	MAKE TO BE INDICATED IN FINAL AS BUILT DRAWING
3	SF6 CIRCUIT BREAKER WITHOUT CR (3-PH) WITH SUPPORT STRUCTURE	3150A	63 KA FOR 1 S.		5 w/O CSD			52	
4	ISOLATOR WITH ONE E/S (3 PH) DOUBLE BREAK TYPE	3150A	63 KA FOR 1 S.	35	35			89/89E	
5	ISOLATOR WITH TWO E/S (3 PH) DOUBLE BREAK TYPE	3150A	63 KA FOR 1 S.	2	2			89/89E1 /89E2	
6	ISOLATOR WITH ONE E/S (1 PH) DOUBLE BREAK TYPE	3150A	63 KA FOR 1 S.	10	10			89/89E	
7	ISOLATOR WITHOUT E/S (1 PH) DOUBLE BREAK TYPE	3150A	63 KA FOR 1 S.	8	8			89	
8	CURRENT TRANSFORMER (1 PH.) WITH 120% EXTENDED CURRENT RATING.	3000A	63 KA FOR 1 S.	45	45			CT	BHEL
9	SURGE ARRESTER (1 PH.)	336 kV	NA	31	31			LA	BHEL
10	500MVA, 400/220/33KV ICT	400KV	NA	5	5			ICT	T&R
11	CVT (1-Ph)	400KV	4400pF	6	6			CVT	BHEL
12	CONTROLLED SWITCHING DEVICE	400KV	NA	10	10			CSD	BHEL
13	400KV POST INSULATOR-8KN	400KV	NA	110	68*			BPI	BHEL

REMARK – PLEASE REFER TABLE- 18 NOS 400KV POST INSULATORS UNDER ERECTION HARDWARE LOT ITEM

SCHEDULE OF EQUIPMENT (OUTDOOR)

ITEM CODE	DESCRIPTION	SLD SYMBOL	LAYOUT SYMBOL	NOA QTY. (NOS.)	SLD QTY. (NOS.)	LEGEND	MAKE
1	245KV, 1600A, 50kA/1s CIRCUIT BREAKER (3-Ph) WITH SUPPORT STRUCTURE			14	14	52	MAKE TO BE INDIACATED IN FINAL AS-BUILT DRAWINGS
2	245KV, 3150A, 50kA/1s CIRCUIT BREAKER (3-Ph) WITH SUPPORT STRUCTURE (BUS COUPLER & BUS SECTIONALISER BAYS)			4	4	52	
3	245KV, 1600A, 50kA/1s HDB ISOLATOR WITH 2E/S (3-Ph)			14	14	89/89E1 /89E2	
4	245KV, 1600A, 50kA/1s HDB ISOLATOR WITH 1E/S (3-Ph)			14	14	89/89E1	
5	245KV, 1600A, 50kA/1s HDB TANDEM ISOLATOR WITHOUT E/S (3-Ph)			26	26	89	
6	245KV, 3150A, 50kA/1s HDB ISOLATOR WITHOUT E/S (3-Ph) (BUS COUPLER BAYS)			04	04	89/89E1	
7	245KV, 3150A, 50kA/1s HDB ISOLATOR WITH 1E/S (3-Ph)(BUS SECTIONALISER BAYS)			04	04	89/89E2	
8	245KV, 1600A (120%), 50kA/1s CURRENT TRANSFORMER (1-Ph)			42	42	CT	
9	245KV, 250A (150%), 50kA/1s CURRENT TRANSFORMER (1-Ph) (BUS COUPLER & BUS SECTIONALISER BAYS)			12	12	CT	
10	245KV CAPACITIVE VOLTAGE TRANSFORMER (4400 pF) (1-Ph)			33	33	CVT	
11	216KV SURGE ARRESTER (1-Ph)			14	36	LA	
12	220KV, 1600A, 0.5mH, 50kA/1s LINE TRAP (1-Ph)			14	14	WT	
13	220KV POST INSULATOR-8KN			230	186+24+6	BPI	

FLAG MARK	EAST(m) X	NORTH(m) Y
A	517348	2677115
B	517864	2677526
C'	517940	2677433
D'	518245	2677688
E	518521	2677366
F	518528	2677057
G	517844	2676513

REVISION 06 REMARKS:

1. NEW LEVEL MARK 4C IS INTRODUCED AROUND ONE NUMBER OF 765KV BUS REACTOR TO ADDRESS ROAD GRADIENT
2. CRB SHIFTED 20M TOWARDS 765KV YARD AS PER SITE INPUT
3. LOCALIZE LEVEL REQUIRED FOR 220KV TOWER NEAR COORDINATE X=828, Y=400 FOR GANTRY CONNECTION.
4. LOCALIZE AVERAGE LEVEL ARE TO BE DONE AROUND AUX BUILDING PLACED IN 220KV YARD Y = 393
5. 220KV TOWER SHIFTED AT X828, Y319. TOWER TYPE PLEASE BE REVISITED

NOA NO. : CC/T/W-AIS/DOM/A10/23/01956/NOA-1/24-102643/01

NAME OF CUSTOMER / NAME OF CLIENT: POWERGRID CORPORATION OF INDIA LTD.

NAME OF PROJECT: ESTABLISHMENT OF 3X1500MVAR, 765/400KV AND 5X500MVA, 400/220KV MANDSAUR POOLING STATION ALONG WITH 2X330MVAR (765KV) BUS REACTOR AND 2X125MVAR 420KV BUS REACTOR.

ADDITIONAL INFORMATION W.O.No.
STATUS OF DRAWING
DISTRIBUTION OF PRINTS

भारत हेवी इलेक्ट्रिकल्स लिमिटेड
BHARAT HEAVY ELECTRICALS LTD.
TRANSMISSION BUSINESS GROUP

	नाम /NAME	हस्ता./SIGN.	दि./DATE
बनाया DRAWN	RT	-SNG-	25-11-24
जाँचा CHECKED	PC/JK	-SNG-	25-11-24
स्वीकृत APPROVED	VK	-SNG-	25-11-24

अनुपात / SCALE — कार्ड कोड CARD CODE — POWERGRID DRAWING NO.

शीर्षक/TITLE: 765/400/220kV MANDSAUR SS-765kV ELECTRICAL LAYOUT & SECTION DRAWING

ड्राइंग.क्र./DRAWING NO. TB202407-1002453-SC3540-765kV-ELEC-LAY — पुनः/REV. 11

FIRST ANGLE PROJECTION (ALL DIMENSIONS ARE IN MM.)

DRG. NO. TB202407-10024S3-SC3540-765KV-ELEC-LAY SEC

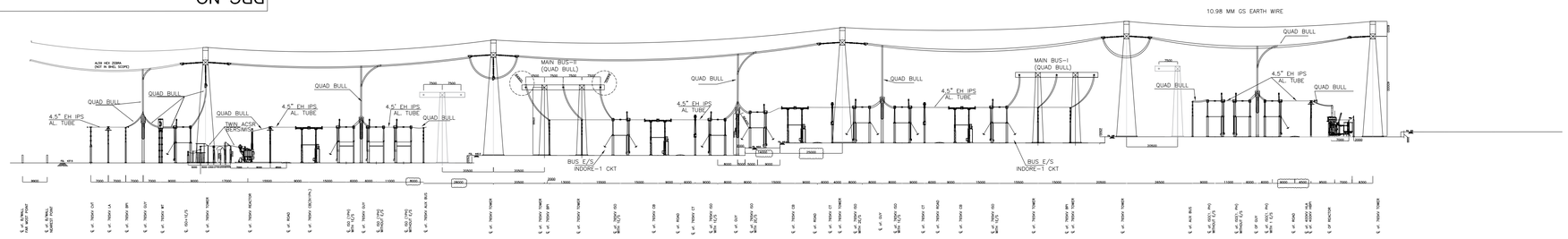

TYPICAL SECTION 7A-7A (765KV-INDORE LINE-TIE-REACTOR) DIA-03 & 04

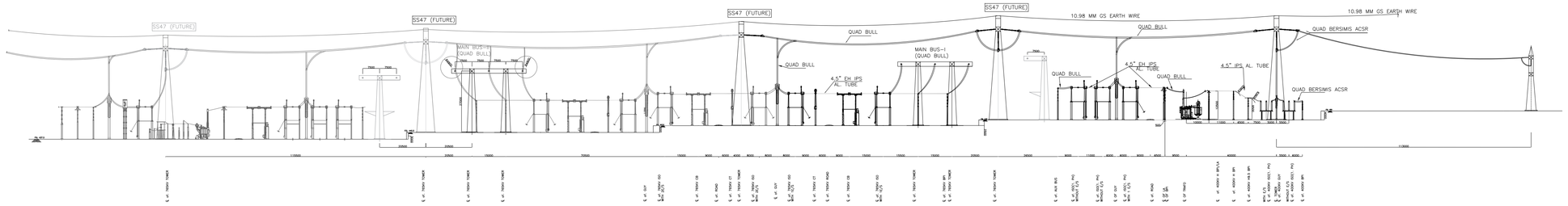

SECTION 7B-7B (765KV-KURAWAR-2 LINE (FUTURE) - TIE (FUTURE) - ICT 1) DIA-05

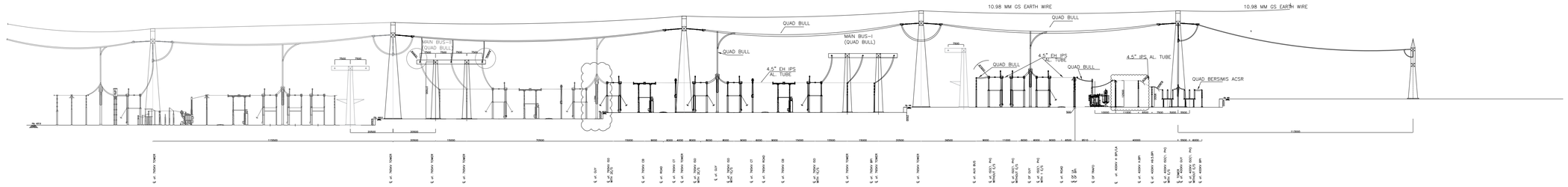

SECTION 7C-7C (765KV-FUTURE KURAWAR-1 LINE-TIE-ICT-2) DIA-06

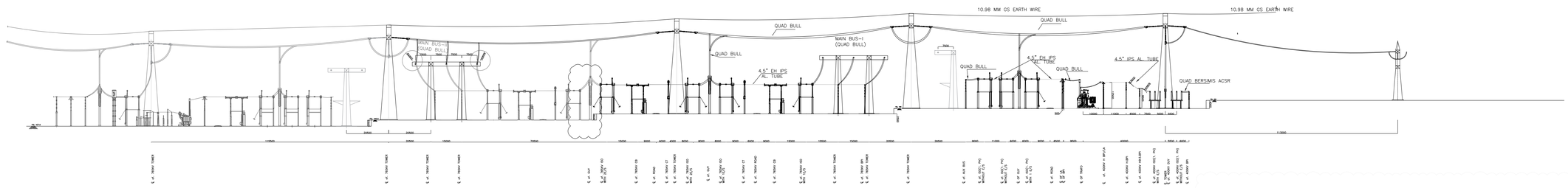

SECTION 7C-7C (765KV-FUTURE LINE-TIE-ICT-3) DIA-07

SYSTEM PARAMETERS

SL. No	DESCRIPTION OF PARAMETERS	765kV System
	- TRANSFORMER AND REACTORS - FOR OTHER EQUIPMENT - FOR INSULATOR STRINGS	2100kVp 2100kVp 2100kVp
ii)	ONE MINUTE POWER FREQUENCY DRY AND WET WITHSTAND VOLTAGE (RMS)	975kV
7	MINIMUM CREEPAGE DISTANCE - FOR INSULATOR STRINGS - FOR OTHER EQUIPMENT	 24800 mm 20000 mm
8	MINIMUM CLEARANCES	
i)	PHASE TO PHASE	7600 mm
ii)	PHASE TO EARTH	4900 mm
iii)	SECTIONAL CLEARANCES	10300 mm

Between Phases : 9400 mm (For Rod-Structure Configuration)
Between Phases to Earth : 4900 mm (For Conductor-Structure Configuration)
Between Phases to Earth : 6400 mm (For Rod-Structure Configuration)
Between Phases to Earth : 6400 mm (For Rod-Structure Configuration)

Min Height of Equipment Bus centre Line shall be 14000mm (Above Plinth Level)
Vertical distance between lowest part of the insulator and plinth level- 2550mm

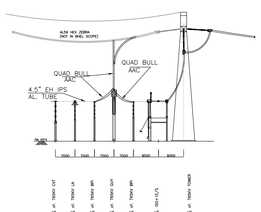

765KV LINE WITHOUT WAVE TRAP (TYPICAL SECTION)

Reference: For Detailed ICT Section, please refer drawing no. Rev. Dated

NOA NO. : CC/T/W-AIS/DOM/A10/23/01956/NOA-1/24-102643/01

NAME OF CUSTOMER: POWERGRID CORPORATION OF INDIA LTD.
NAME OF CLIENT: ESTABLISHMENT OF 3X1500MVAR, 765/400KV AND 5X500MVA, 400/220KV MANDSAUR POOLING STATION ALONG WITH 2X330MVAR (765KV) BUS REACTOR AND 2X125MVAR 420KV BUS REACTOR.
NAME OF PROJECT

ADDITIONAL INFORMATION W.O.No.
STATUS OF DRAWING
DISTRIBUTION OF PRINTS

भारत हेवी इलेक्ट्रिकल्स लिमिटेड
BHARAT HEAVY ELECTRICALS LTD.
TRANSMISSION BUSINESS GROUP

	नाम /NAME	हस्ता./SIGN.	दि./DATE
तैयार DRAWN	RT	-SNG-	25-11-24
जाँचा CHECKED	PC/JK	-SNG-	25-11-24
स्वीकृत APPROVED	VK	-SNG-	25-11-24

REV.	DATE	ALTERED	RT
04	28.11.25	CHECKED	
		APPROVED	
ZONE	AS PER POWERGRID COMMENTS		

REV.	DATE	ALTERED	RT
03	11.06.25	CHECKED	JK
		APPROVED	VK
ZONE	AS PER POWERGRID COMMENTS		

REV.	DATE	ALTERED	RT
01	18.03.25	CHECKED	JK
		APPROVED	VK
ZONE	AS PER POWERGRID COMMENTS		

विभाग DEPT. | कोड CODE | अनुपात / SCALE | कार्ड कोड CARD CODE

POWERGRID DRAWING NO.

शीर्षक/TITLE: 765/400/220kV MANDSAUR SS-765kV ELECTRICAL LAYOUT SECTION DRAWING

ड्राईंग क्र./DRAWING NO.: TB202407-10024S3-SC3540-765kV-ELEC-LAY SEC

पुनः/REV. 04

पृष्ठ क्र./SHEET No. 01 | अगला पृष्ठ/NEXT SHEET 02

COPY RIGHT AND CONFIDENTIAL
THE INFORMATION ON THIS DOCUMENT IS THE PROPERTY OF BHARAT HEAVY ELECTRICALS LIMITED.
IT MUST NOT BE USED DIRECTLY OR INDIRECTLY IN ANY WAY DETRIMENTAL TO THE INTEREST OF THE COMPAY

COMPUTER DRG. PATH NAME :
REF. DRG. NO.
SIGN. AND DATE
INVENTORY NO

FIRST ANGLE PROJECTION (ALL DIMENSIONS ARE IN MM.)

DRG. NO.
TB202407-1002453-SC3540-765kV-ELEC-LAY SEC

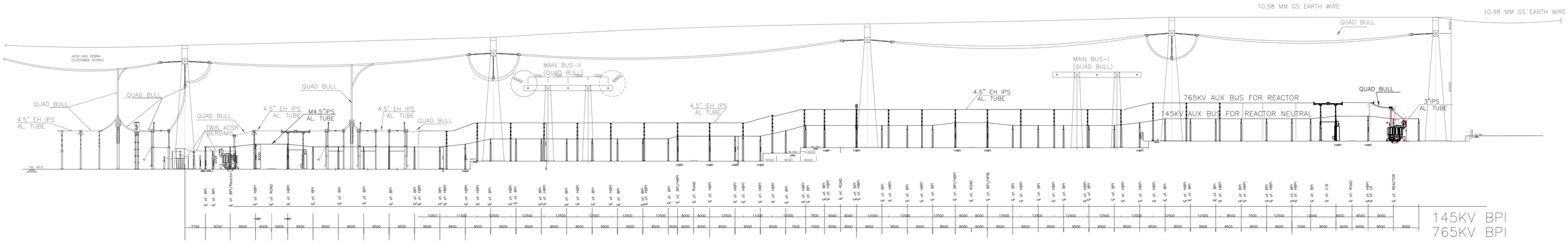

765/145KV BPI AUX BUS INTERCONNECTION ALONG THE DIAMETER

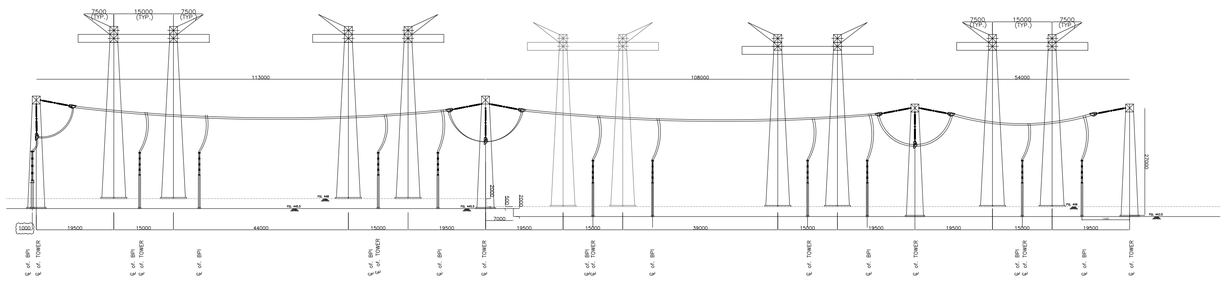

SECTION 7D1-7D1 (765KV MAIN BUS-I)

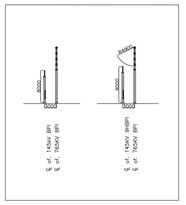

SECTION E-E

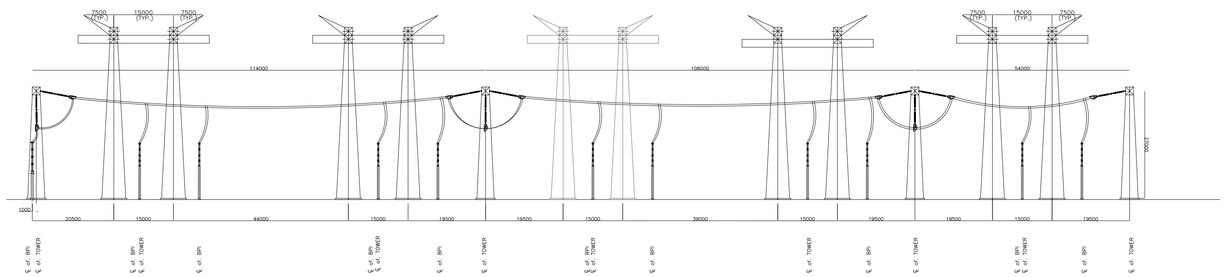

SECTION 7D2-7D2 (765KV MAIN BUS-II)

ALUMINUM TUBE

———	4.5 INCH AL TUBE
———	3.0 INCH AL TUBE

145KV AUX BUS FOR REACTOR NEUTRAL

REMARK :- 765KV & 145KV AUX BUS INTERCONNECTION ALONG THE 765KV DIAMETER WAS NOT IN BHEL SCOPE OF SUPPLY & SHOWN FOR REFERENCE ONLY.

NOA NO. : CC/T/W-AIS/DOM/A10/23/01956/NOA-1/24-102643/01

ADDITIONAL INFORMATION W.O.No.

STATUS OF DRAWING

DISTRIBUTION OF PRINTS

NAME OF CUSTOMER: POWERGRID CORPORATION OF INDIA LTD.
NAME OF CLIENT: ESTABLISHMENT OF 3X1500MVAR, 765/400KV AND 5X500MVA, 400/220KV MANDSAUR POOLING STATION ALONG WITH 2X330MVAR (765KV) BUS REACTOR AND 2X125MVAR 420KV BUS REACTOR.
NAME OF PROJECT

भारत हेवी इलेक्ट्रिकल्स लिमिटेड
BHARAT HEAVY ELECTRICALS LTD.
TRANSMISSION BUSINESS GROUP

	नाम /NAME	हस्ता./SIGN.	दि./DATE
बनाया DRAWN	RT	-SNG-	25-11-24
जाँचा CHECKED	PC/JK	-SNG-	25-11-24
स्वीकृत APPROVED	VK	-SNG-	25-11-24

REV.	DATE	ALTERED	CHECKED	APPROVED
04	28.11.25	RT	JK	VK
03	11.06.25	RT	JK	VK
01	18.03.25	RT	JK	VK

ZONE: AS PER POWERGRID COMMENTS

विभाग DEPT.
कोड CODE
अनुपात / SCALE
कार्ड कोड CARD CODE

शीर्षक/TITLE: 765/400/220kV MANDSAUR SS-765kV ELECTRICAL LAYOUT SECTION DRAWING

POWERGRID DRAWING NO.
ड्राईंग क्र./DRAWING NO. TB202407-1002453-SC3540-765kV-ELEC-LAY SEC
पुनः/REV. 04
पृष्ठ क्र./SHEET No. 02 क्रमला पृष्ठ/NEXT SHEET —

COPY RIGHT AND CONFIDENTIAL
THE INFORMATION ON THIS DOCUMENT IS THE PROPERTY OF BHARAT HEAVY ELECTRICALS LIMITED.
IT MUST NOT BE USED DIRECTLY OR INDIRECTLY IN ANY WAY DETRIMENTAL TO THE INTEREST OF THE COMPAY

COMPUTER DRG. PATH NAME :
REF. DRG. NO.
SIGN. AND DATE
INVENTORY NO

FIRST ANGLE PROJECTION (ALL DIMENSIONS ARE IN MM.)

DRG. NO. TB202407-1002453-SC3540-400KV-ELEC-LAY SEC

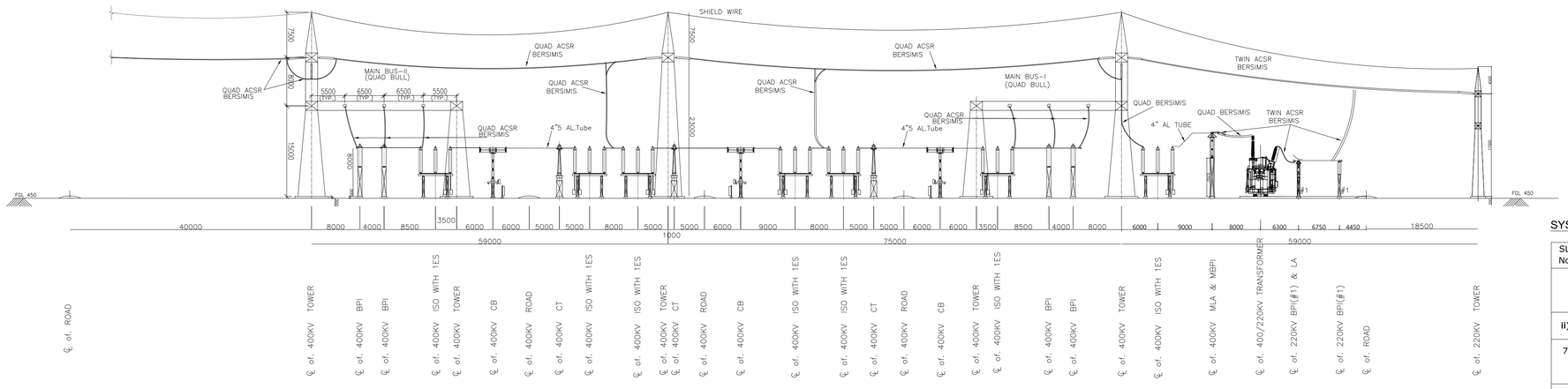

SECTION 4A–4A (765/400KV ICT#1–TIE–400/220KV ICT#1)

SYSTEM PARAMETERS

SL. No	DESCRIPTION OF PARAMETERS	400kV System
	- TRANSFORMER AND REACTORS - FOR OTHER EQUIPMENT - FOR INSULATOR STRINGS	±1425kVp ±1425kVp ±1550kVp
II)	ONE MINUTE POWER FREQUENCY DRY AND WET WITHSTAND VOLTAGE (RMS)	630kV
7	MINIMUM CREEPAGE DISTANCE - FOR INSULATOR STRINGS - FOR OTHER EQUIPMENT	 13020 mm 10500 mm
8	MINIMUM CLEARANCES	
i)	PHASE TO PHASE	4200 mm
II)	PHASE TO EARTH	3500 mm
iii)	SECTIONAL CLEARANCES	6500 mm

Min Height of Equipment Bus centre Line shall be 8000mm (Above Plinth Level)

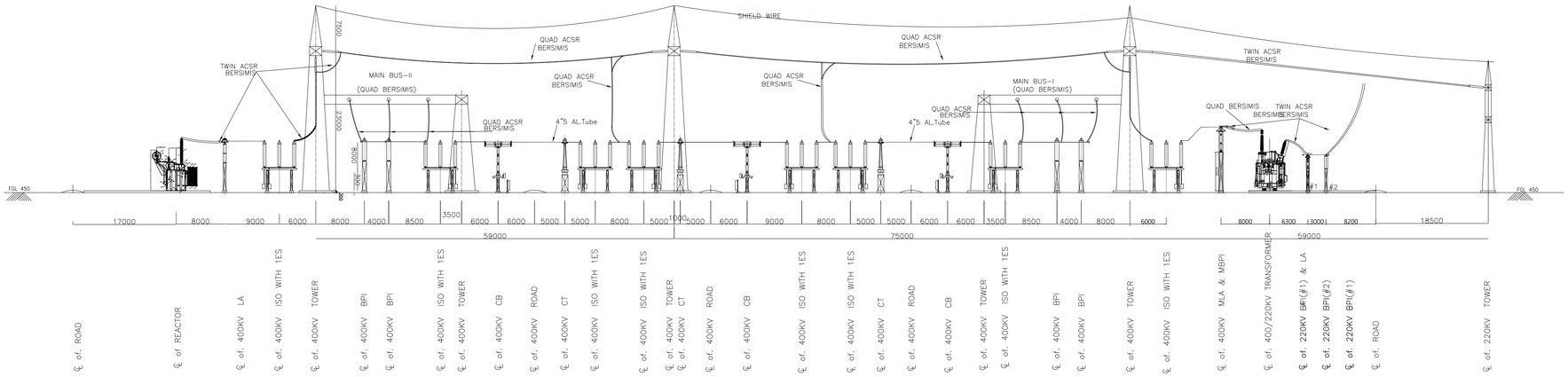

SECTION 4B–4B (400KV REACTOR–TIE–400/220KV ICT#3)

REMARK –
220KV BPI(#1) : APPLICABLE FOR 400/220KV ICT – 1 & 3 IV SIDE
220KV BPI(#2) : APPLICABLE FOR 400/220KV ICT – 2, 4 & 5 IV SIDE

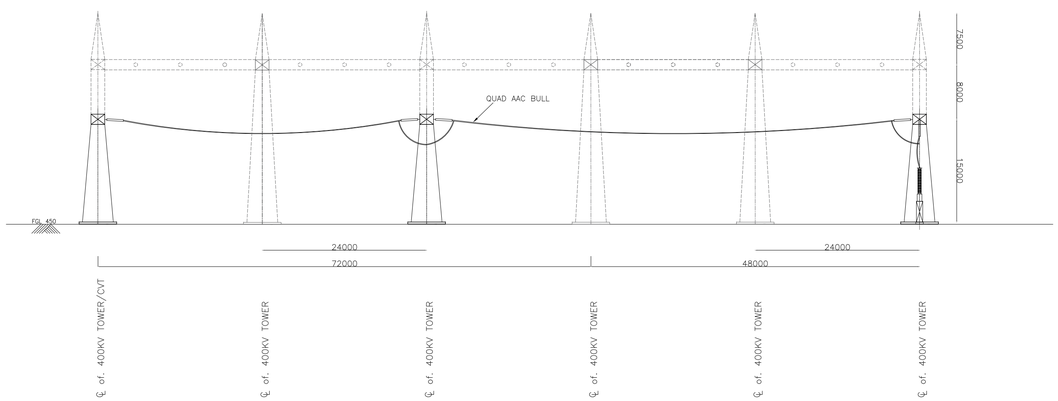

SECTION 4C–4C (400KV MAIN BUS–II)

NOA NO. : CC/T/W-AIS/DOM/A10/23/01956/NOA-1/24-102643/01

ADDITIONAL INFORMATION W.O.No.

STATUS OF DRAWING

DISTRIBUTION OF PRINTS

NAME OF CUSTOMER / NAME OF CLIENT / NAME OF PROJECT: POWERGRID CORPORATION OF INDIA LTD. ESTABLISHMENT OF 3X1500MVAR, 765/400KV AND 5X500MVA, 400/220KV MANDSAUR POOLING STATION ALONG WITH 2X330MVAR (765KV) BUS REACTOR AND 2X125MVAR 420KV BUS REACTOR.

भारत हेवी इलेक्ट्रिकल्स लिमिटेड
BHARAT HEAVY ELECTRICALS LTD.
TRANSMISSION BUSINESS GROUP

	नाम /NAME	हस्ता./SIGN.	दि./DATE
बनाया DRAWN	RT	–SNG–	25–11–24
जाँचा CHECKED	PC/JK	–SNG–	25–11–24
स्वीकृत APPROVED	VK	–SNG–	25–11–24

REV.	DATE	ALTERED / CHECKED / APPROVED	ZONE
03	28.11.25	RT / JK / VK	AS PER POWERGRID COMMENTS
02	11.06.25	RT / JK / VK	AS PER POWERGRID COMMENTS
01	04–03–25	RT / JK / VK	AS PER POWERGRID COMMENTS

विभाग DEPT. / कोड CODE / अनुपात / SCALE / कार्ड कोड CARD CODE

POWERGRID DRAWING NO.

शीर्षक/TITLE: 765/400/220kV MANDSAUR SS-400kV ELECTRICAL LAYOUT & SECTION DRAWING

ड्राईंग क्र./DRAWING NO.: TB202407-1002453-SC3540-400kV-ELEC-LAY SEC

पुनः/REV. 03

पृष्ठ क्र./SHEET No. 01 अगला पृष्ठ /NEXT SHEET –

COPY RIGHT AND CONFIDENTIAL
THE INFORMATION ON THIS DOCUMENT IS THE PROPERTY OF BHARAT HEAVY ELECTRICALS LIMITED.
IT MUST NOT BE USED DIRECTLY OR INDIRECTLY IN ANY WAY DETRIMENTAL TO THE INTEREST OF THE COMPAY

COMPUTER DRG. PATH NAME :
REF. DRG. NO.
SIGN. AND DATE
INVENTORY NO

FIRST ANGLE PROJECTION (ALL DIMENSIONS ARE IN MM.)

DRG. NO.

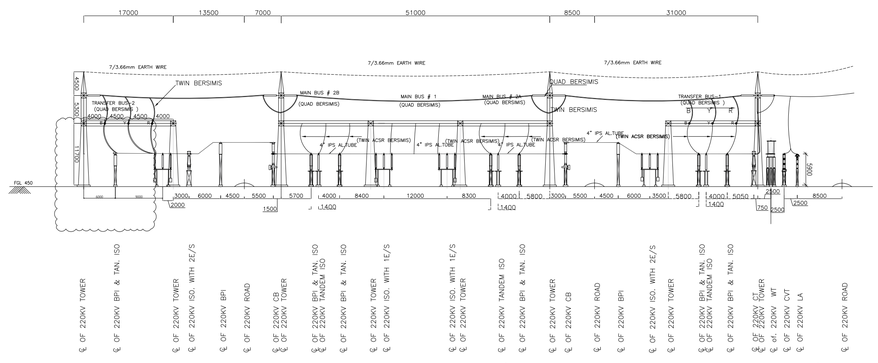

SECTION 2A–2A (220KV TBC–LINE)

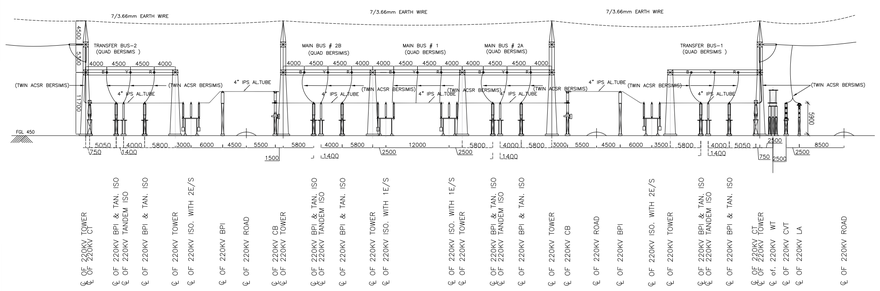

SECTION 2B–2B (220KV ICT–LINE)

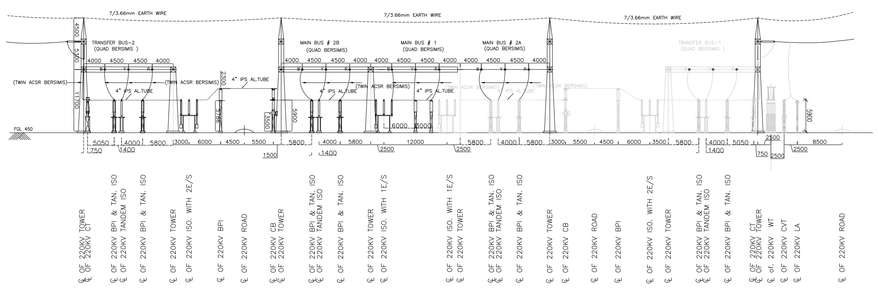

SECTION 2D–2D (220KV ICT–LINE(FUTURE)

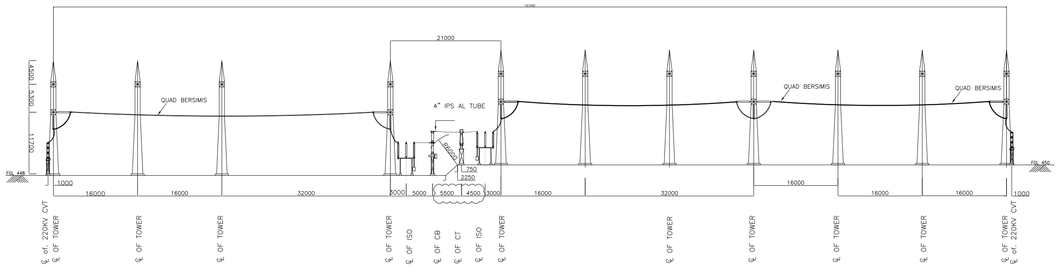

SECTION 2F–2F (220KV MAIN BUS–II(A))

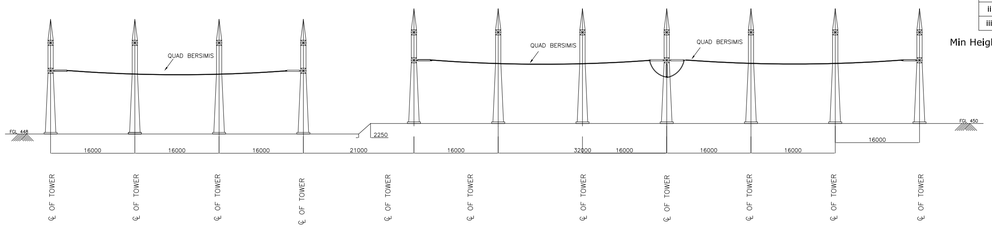

SECTION 2G–2G (220KV TRANSFER BUS–I)

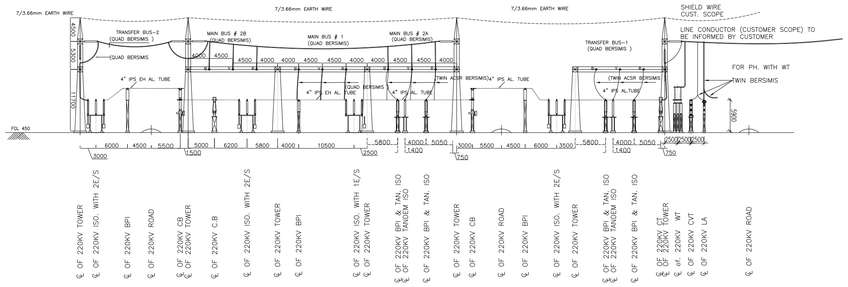

SECTION 2C–2C (220KV–BUS COUPLER–LINE)

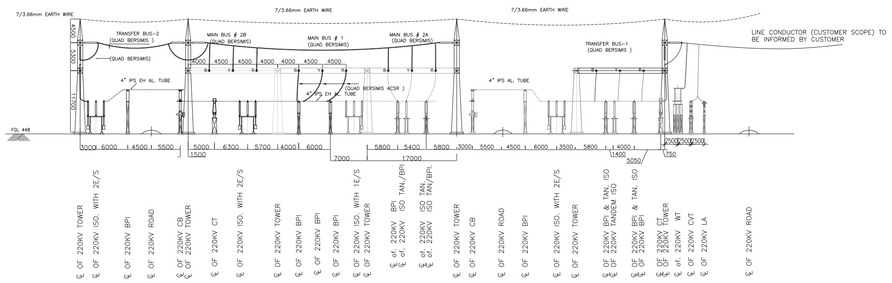

SECTION 2E–2E (220KV–BUS COUPLER–LINE)

SYSTEM PARAMETERS

SL. No	DESCRIPTION OF PARAMETERS	220kV System
	- TRANSFORMER AND REACTORS - FOR OTHER EQUIPMENT - FOR INSULATOR STRINGS	±950kVp ±1050kVp ±1050kVp
ii)	ONE MINUTE POWER FREQUENCY DRY AND WET WITHSTAND VOLTAGE (RMS)	460kV
7	MINIMUM CREEPAGE DISTANCE - FOR INSULATOR STRINGS - FOR OTHER EQUIPMENT	 7595 mm 6125 mm
8	MINIMUM CLEARANCES	
i)	PHASE TO PHASE	2100 mm
ii)	PHASE TO EARTH	2100 mm
iii)	SECTIONAL CLEARANCES	5000 mm

Min Height of Equipment Bus centre Line shall be 5900mm (Above Plinth Level)

COPY RIGHT AND CONFIDENTIAL
THE INFORMATION ON THIS DOCUMENT IS THE PROPERTY OF BHARAT HEAVY ELECTRICALS LIMITED.
IT MUST NOT BE USED DIRECTLY OR INDIRECTLY IN ANY WAY DETRIMENTAL TO THE INTEREST OF THE COMPAY

COMPUTER DRG. PATH NAME :

REF. DRG. NO.

SIGN. AND DATE

INVENTORY NO

NOA NO. : CC/T/W-AIS/DOM/A10/23/01956/NOA-1/24-102643/01

ADDITIONAL INFORMATION
W.O.No.

STATUS OF DRAWING

DISTRIBUTION OF PRINTS

NAME OF CUSTOMER
NAME OF CLIENT — POWERGRID CORPORATION OF INDIA LTD.
NAME OF PROJECT — ESTABLISHMENT OF 3X1500MVAR, 765/400KV AND 5X500MVA, 400/220KV MANDSAUR POOLING STATION ALONG WITH 2X330MVAR (765KV) BUS REACTOR AND 2X125MVAR 420KV BUS REACTOR.

भारत हेवी इलेक्ट्रिकल्स लिमिटेड
BHARAT HEAVY ELECTRICALS LTD.
TRANSMISSION BUSINESS GROUP

	नाम /NAME	हस्ता./SIGN.	दि./DATE
बनाया DRAWN	RT	-SNG-	25-11-24
जाँचा CHECKED	PC/JK	-SNG-	25-11-24
स्वीकृत APPROVED	VK	-SNG-	25-11-24

REV.	DATE	ALTERED / CHECKED / APPROVED
ZONE		

REV.	DATE	ALTERED / CHECKED / APPROVED
02	28.11.25	RT / JK / VK
ZONE	AS PER POWERGRID COMMENTS	

REV.	DATE	ALTERED / CHECKED / APPROVED
01	11.06.25	RT / JK / VK
ZONE	AS PER POWERGRID COMMENTS	

विभाग DEPT. — कोड CODE — अनुपात / SCALE — कार्ड कोड CARD CODE — POWERGRID DRAWING NO.

शीर्षक/TITLE
765/400/220kV MANDSAUR SS-220kV
ELECTRICAL LAYOUT & SECTION DRAWING

ड्राईंग क्र./DRAWING NO. TB202407-1002453-BC3540-220kV-ELEC-LAY SEC — पुनः/REV. 02

पृष्ठ क्र./SHEET No. — अगला पृष्ठ /NEXT SHEET

पावरग्रिड
POWERGRID

पावर ग्रिड कॉर्पोरेशन ऑफ इंडिया लिमिटेड
(भारत सरकार का उद्यम)
POWER GRID CORPORATION OF INDIA LIMITED
(A Government of India Enterprise)

संदर्भ/Ref : CC-ENGG-TB202447-1002655-SC3540-SLD **Date :** 20/04/2025

From : Somiran Das
Senior GM

To : M/s Bharat Heavy Electricals Limited
Regional Operations Division, 3rd Floor
Integrated Office Complex, Lodhi Road
New Delhi-110003

Cc : NIL

Subject : Substation Package SS47T

LOA Ref : CC/T/W-AIS/DOM/A06/23/12236/NOA-1/24-114234/01 & NOA-2/24-114234/02 Dated 27/11/2024

Please find enclosed following drawings/ documents for necessary action at your end.

Vendor Drg. No. :

Orgn. Drg. No.	:	TB202447-1002655-SC3540-SLD
Revision No.	:	03
Drg. Title	:	SS47T-765kV MANDSAUR SS-SINGLE LINE DIAGRAM
App. Category	:	CAT-I
Release Date	:	20/04/2025

Scan to verfiy

Comments : Generally in order

अनुमोदित श्रेणी/App. Category:

I. फेब्रिकेशन/निर्माण/टाइप टेस्टिंग हेतु जारी।
Approved/released for fabrication/construction.

II. फेब्रिकेशन/निर्माण/टाइप टेस्टिंग हेतु अनुमोदित/जारी बशर्ते दिए गए टिप्पणियाँ एवं आशोधनों की सम्मिलित किया जाये। कृपया रिवाइजड दस्तावेज अनुमोदनार्थ प्रस्तुत करें।
Approved/released for fabrication/ construction subject to incorporation of comments and modification as noted. Revised drawing required for approval.

III. टिप्पणियाँ सम्मिलित करने के उपरांत दस्तावेज को अनुमोदनार्थ प्रस्तुत करें।
To be resubmitted for approval after incorporating the comments.

IV. सूचनार्थ एवं रिकार्ड हेतु।
For information and record.

CATREL/ REL-CON निर्माण हेतु जारी।
Released for construction.

नोट/Note:

1. Approval/Comments conveyed herein neither relieve the contractor of his contractual obligations and his responsibilities, weights, quantities, design details assemble fits, performance particulars and conformity of the supplies with the Indian Statutory Laws as may be applicable, nor does it limits the purchaser's right under the contract.
2. The approval conveyed vide this letter does not cover the approval of make for sub-vendor items.

DRG. NO. TB-1-431-510-001

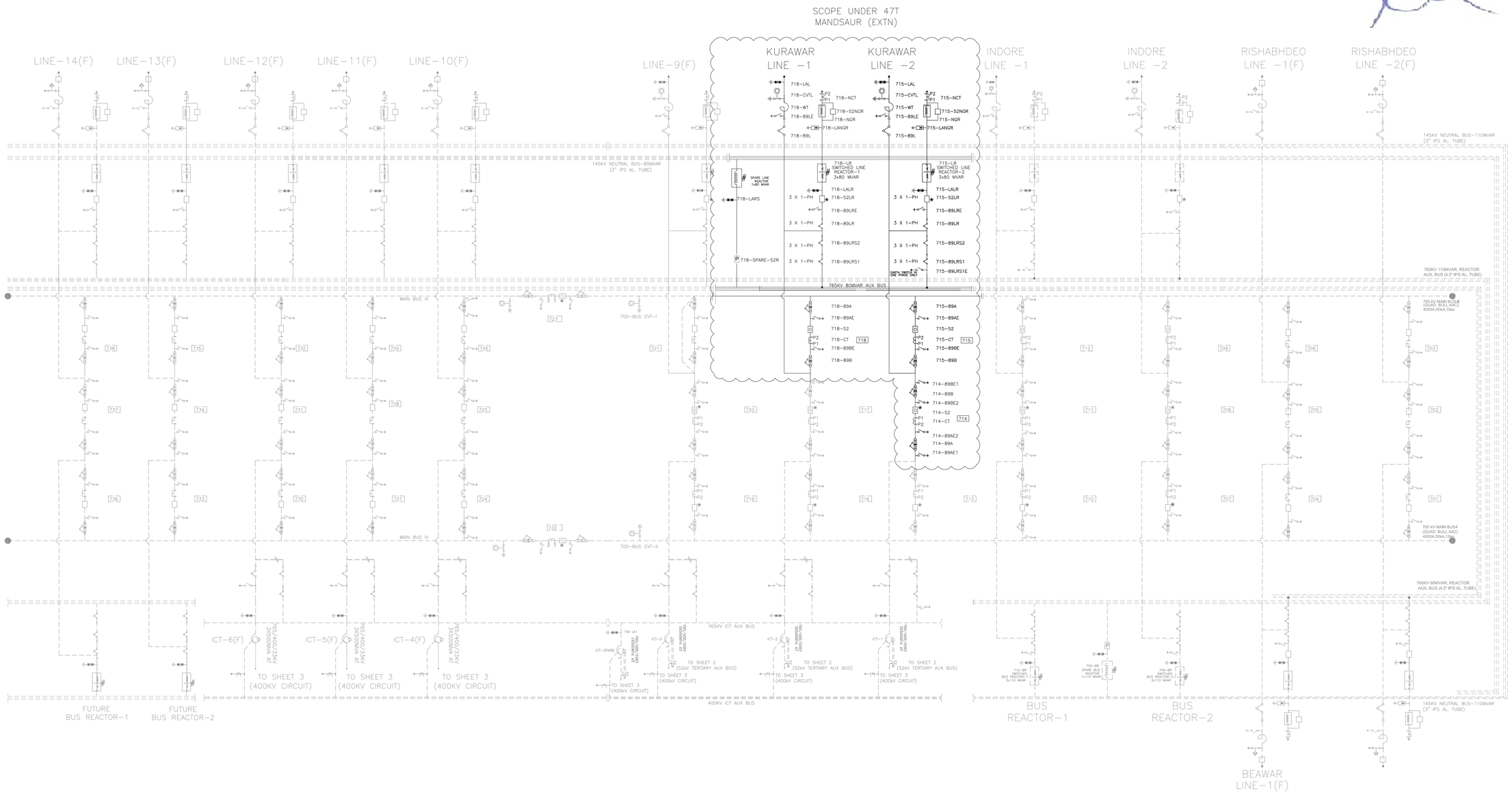

NOTES:-
1. SYSTEM
765kV, 50kA FOR 1 SEC., 50Hz, 3Ph, SOLIDLY EARTHED
2. PRESENT ———
FUTURE – – – –
3. PHASE LOCATION OF WAVE TRAPS TO BE DECIDED DURING DETAILED ENGINEERING
4. 765kV EQUIPMENTS FOR ICT AND REACTOR SWITCHING ARE ALSO INCLUDED IN THE BOQ OF QTY. FOR 765kV MAIN EQUIPMENTS.

NOA NO. : CC/T/WAIS/DOM/A06/23/12236/ NOA-1/24-114234/01 DTD 27-11-2024

ADDITIONAL INFORMATION
W.O.No.

STATUS OF DRAWING

DISTRIBUTION OF PRINTS

ग्राहक/परियोजना का नाम
NAME OF CUSTOMER/CONSULTANT:- POWERGRID CORPORATION OF INDIA LIMITED
NAME OF PROJECT:-
765KV AIS PKG SS-47T FOR (I) ESTABLISHMENT OF 765/400/220/132KV KURAWAR (NEW) SUBSTATION (II) EXTN. OF 400KV SHUJALPUR S/S (III) EXTN. OF 400KV ASHTHA S/S (IV) EXTN. OF 765KV MANDSAUR S/S

बीएचईएल भारत हैवी इलेक्ट्रिकल्स लिमिटेड ट्रांसमिशन परियोजना विभाग
BHARAT HEAVY ELECTRICALS LTD. TRANSMISSION PROJECTS DIVISION

	नाम /NAME	हस्ता./SIGN.	दि./DATE
बनाया DRAWN	PC	-SGD-	10.01.25
जाँचा CHECKED	JK	-SGD-	10.01.25
स्वीकृत APPROVED	VK	-SGD-	10.01.25

REV.	DATE	ALTERED	REV.	DATE	ALTERED	REV.	DATE	ALTERED
03	11.03.25	PC	02	06.03.25	PC	01	24.02.25	PC
		CHECKED JK			CHECKED JK			CHECKED JK
		APPROVED VK			APPROVED VK			APPROVED VK
ZONE	POWERGIRD COMMENTS INCORPORATED. CSD IS INCLUDED FOR TIE BAY CB OF ICT AS PER 6.8.2 OF SPECIFIC REQUIREMENTS		ZONE	POWERGIRD COMMENTS INCORPORATED. CSD IS INCLUDED FOR TIE BAY CB OF ICT		ZONE	AS PER POWERGIRD COMMENTS	

विभाग DEPT. | कोड CODE | अनुपात / SCALE | कार्ड कोड CARD CODE

शीर्षक/TITLE SINGLE LINE DIAGRAM FOR 765kV MANDSAUR EXTN S/S

ड्राईंग.क./DRAWING NO. TB202447-1002655-SC3540-SLD

पुनः/REV. 02

पृष्ठ क./SHEET No. | अगला पृष्ठ/NEXT SHEET

COPY RIGHT AND CONFIDENTIAL
THE INFORMATION ON THIS DOCUMENT IS THE PROPERTY OF BHARAT HEAVY ELECTRICALS LIMITED.
IT MUST NOT BE USED DIRECTLY OR INDIRECTLY IN ANY WAY DETRIMENTAL TO THE INTEREST OF THE COMPAY

COMPUTER DRG. PATH NAME :
REF. DRG. NO.
SIGN. AND DATE
INVENTORY NO

DRG. NO.

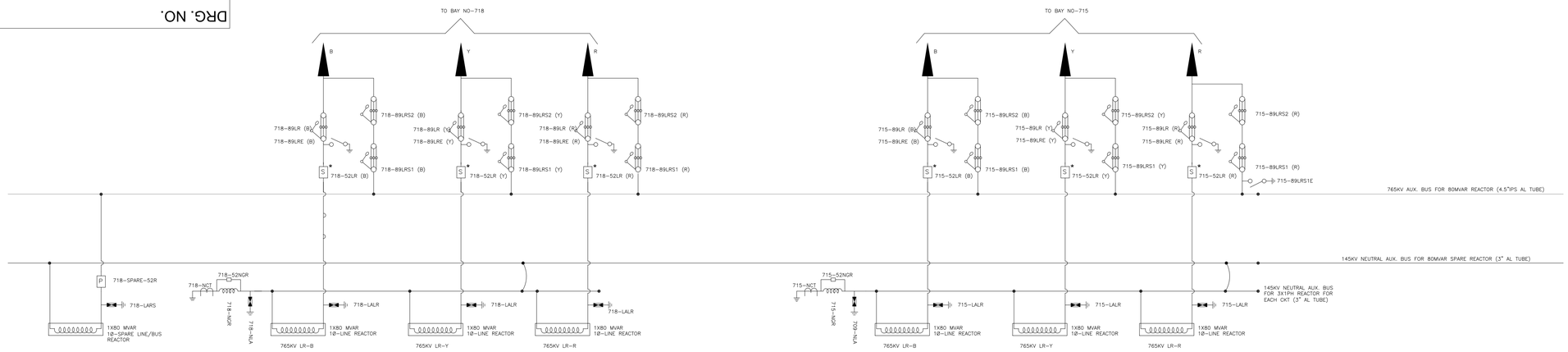

(ARRANGEMENT OF 765kV, 80MVAR LINE REACTOR AND AUX. BUS)

BILL OF QTY. FOR 765kV MAIN EQUIPMENTS:

SL.NO.	DESCRIPTION	RATING	S. C. RATING	NOA QTY. (NO.)	SLD QTY. (NO.)	SYMBOL	SCOPE OF SUPPLY	LEGEND	MAKE
1	80MVAR LINE REACTOR (1-PH) WITH NGR	765KV	50 KA FOR 1 S.	07	07		POWERGRID	LR/NGR	TBD
2	SF6 CIRCUIT BREAKER WITH CR, (3-PH)	765kV,3150A	50 KA FOR 1 S.	03	02 W/O CSD 01 WITH CSD		BHEL	52	TBD
3	SF6 CIRCUIT BREAKER (3-PH) WITHOUT CLOSING RESISTOR WITH CONTROL SWITCHING SUITABLE FOR 1-PH REACTOR SWITCHING	765kV, 3150A	50 KA FOR 1 S.	02	02	*	BHEL	52	TBD
4	SF6 CIRCUIT BREAKER WITHOUT CR,WITH CSD (1-PH) PROVISION	765kV, 3150A	50 KA FOR 1 S.	01	01	P	BHEL	52	TBD
5	ISOLATOR WITH ONE E/S (3 PH) VERTICAL KNEE TYPE	765kV, 3150A	50 KA FOR 1 S.	06	06		BHEL	89/89E	TBD
6	ISOLATOR WITH TWO E/S (3 PH) VERTICAL KNEE TYPE	765kV, 3150A	50 KA FOR 1 S.	02	02		BHEL	89/89E1 /89E2	TBD
7	ISOLATOR WITH ONE E/S (1 PH) VERTICAL KNEE TYPE	765kV, 2000A	50 KA FOR 1 S.	07	07		BHEL	89/89E1	TBD
8	ISOLATOR WITHOUT E/S	765kV, 2000A	50 KA FOR 1 S.	11	11		BHEL	89	TBD
9	CURRENT TRANSFORMER (1 PH.) WITH 120% EXTENDED CURRENT RATING.	3000A	50 KA FOR 1 S.	09	09		BHEL	CT	TBD
10	CVT (1 PH.)	8800pF	NA	06	06		BHEL	CVT	BHEL
11	SURGE ARRESTER (1 PH.)	624 kV	NA	13	13		BHEL	LA	TBD
12	WAVE TRAP (1 PH.) PEDESTAL TYPE.	1mH, 3150A	50 KA FOR 1 S.	04	04		BHEL	WT	TBD
13	CONTROLLED SWITCHING DEVICE	765kV	50 KA FOR 1 S.	02	03#		BHEL	CSD	TBD

POWERGRID TO ISSUE SUITABLE BOQ AMENDMENT FOR 765kV BREAKER QUANTITY

800kV CT DETAILS

CORE	CURRENT RATIO	ACCURACY CLASS	OUTPUT BURDEN (VA)	MIN KPV (V)	MAX RCT (OHMS)	MAX IM AT KPV(MA)	PURPOSE
1	3000/ 2000/ 500/1	PX	–	3000-2000-500	15-10-2.5	20mA on 3000/1 Tap 30mA on 2000/1 Tap 120mA on 500/1 Tap	BUS DIFF. MAIN-1
2	3000/ 2000/ 500/1	PX	–	3000-2000-500	15-10-2.5	20mA on 3000/1 Tap 30mA on 2000/1 Tap 120mA on 500/1 Tap	BUS DIFF. MAIN-2
3	3000/ 2000/ 500/1	0.2S 0.2S 0.2S	20 20 20	–	–		METERING
4	3000/ 2000/ 500/1	0.2S 0.2S 0.2S	20 20 20	–	–		METERING
5	3000/ 2000/ 500/1	PX	–	3000-2000-500	15-10-2.5	20mA on 3000/1 Tap 30mA on 2000/1 Tap 120mA on 500/1 Tap	TRAFO DIFF./ LINE PROTN
6	3000/ 2000/ 500/1	PX	–	3000-2000-500	15-10-2.5	20mA on 3000/1 Tap 30mA on 2000/1 Tap 120mA on 500/1 Tap	LINE PROTN/ LBB PROTN.

765kV CVT DETAILS

APPLICATION	PRIMARY (KV)	SECONDARY (KV)	OUTPUT (VA)	ACCURACY
PROTECTION	$\frac{765kV}{\sqrt{3}}$	$\frac{0.11kV}{\sqrt{3}}$	50VA	0.5/3P
PROTECTION	$\frac{765kV}{\sqrt{3}}$	$\frac{0.11kV}{\sqrt{3}}$	50VA	0.5/3P
METERING	$\frac{765kV}{\sqrt{3}}$	$\frac{0.11kV}{\sqrt{3}}$	50VA	0.2

CORE UTILIZATION SHALL BE AS PER APPROVED PROTECTION SCHEMATIC DRAWINGS

NOA NO. : CC/T/WAIS/DOM/A06/23/12236/ NOA-1/24-114234/01 DTD 27-11-2024

ADDITIONAL INFORMATION W.O.No.

STATUS OF DRAWING

DISTRIBUTION OF PRINTS

ग्राहक/परियोजना का नाम
NAME OF CUSTOMER/CONSULTANT:- POWERGRID CORPORATION OF INDIA LIMITED
NAME OF PROJECT:- **765KV AIS PKG SS-47T** FOR (I) ESTABLISHMENT OF 765/400/220/132KV KURAWAR (NEW) SUBSTATION (II) EXTN. OF 400KV SHUJALPUR S/S (III) EXTN. OF 400KV ASHTHA S/S (IV) EXTN. OF 765KV MANDSAUR S/S

भारत हैवी इलेक्ट्रिकल्स लिमिटेड
ट्रांसमिशन परियोजना विभाग
BHARAT HEAVY ELECTRICALS LTD.
TRANSMISSION PROJECTS DIVISION

	नाम /NAME	हस्ता./SIGN.	दि./DATE
बनाया DRAWN	PC	-SGD-	10.01.25
जाँचा CHECKED	JK	-SGD-	10.01.25
स्वीकृत APPROVED	VK	-SGD-	10.01.25

विभाग DEPT. | कोड CODE | अनुपात / SCALE | कार्ड कोड CARD CODE

शीर्षक/TITLE
ARRANGEMENT OF AUX. REACTOR AND TECHNICAL PARAMETERS FOR MANDSAUR EX

ड्राईंग.क./DRAWING NO. TB202447-1002655-SC3540-SLD
पुनः/REV. 02
पृष्ठ क./SHEET No. | अगला पृष्ठ /NEXT SHEET

REV.	DATE	ALTERED	ZONE
03	11.03.25	PC / JK / VK	POWERGIRD COMMENTS INCORPORATED. CSD IS INCLUDED FOR TIE BAY CB OF ICT AS PER 6.8.2 OF SPECIFIC REQUIREMENTS
02	06.03.25	PC / JK / VK	POWERGIRD COMMENTS INCORPORATED. CSD IS INCLUDED FOR TIE BAY CB OF ICT
01	24.02.25	PC / JK / VK	AS PER POWERGIRD COMMENTS

COPY RIGHT AND CONFIDENTIAL
THE INFORMATION ON THIS DOCUMENT IS THE PROPERTY OF BHARAT HEAVY ELECTRICALS LIMITED.
IT MUST NOT BE USED DIRECTLY OR INDIRECTLY IN ANY WAY DETRIMENTAL TO THE INTEREST OF THE COMPAY

COMPUTER DRG. PATH NAME :
REF. DRG. NO.
SIGN. AND DATE
INVENTORY NO

संदर्भ/Ref : CC-ENGG-TB202447-1002655-SC3540-ELEC LAY **Date :** 04/12/2025

From : Somiran Das
Senior GM

To : M/s Bharat Heavy Electricals Limited
Regional Operations Division, 3rd Floor
Integrated Office Complex, Lodhi Road
New Delhi-110003

Cc : NIL

Subject : Substation Package SS47T

LOA Ref : CC/T/W-AIS/DOM/A06/23/12236/NOA-1/24-114234/01 & NOA-2/24-114234/02 Dated 27/11/2024

Please find enclosed following drawings/ documents for necessary action at your end.

Vendor Drg. No.	:	MANDSAUR EXTENSION LAYOUT SECTION
Orgn. Drg. No.	:	TB202447-1002655-SC3540-ELEC LAY
Revision No.	:	03
Drg. Title	:	SS47T-765kV MANDSAUR SS-ELECTRICAL LAYOUT PLAN & SECTION
App. Category	:	CAT-II
Release Date	:	04/12/2025

Scan to verfiy

Comments : Comments marked on the document

अनुमोदित श्रेणी/App. Category:

I. फेब्रिकेशन/निर्माण/टाइप टेस्टिंग हेतु जारी।
Approved/released for fabrication/construction.

II. फेब्रिकेशन/निर्माण/टाइप टेस्टिंग हेतु अनुमोदित/जारी बशर्ते दिए गए टिप्पणियाँ एवं आशोधनों की सम्मिलित किया जाये। कृपया रिवाइजड दस्तावेज अनुमोदनार्थ प्रस्तुत करें।
Approved/released for fabrication/ construction subject to incorporation of comments and modification as noted. Revised drawing required for approval.

III. टिप्पणियाँ सम्मिलित करने के उपरांत दस्तावेज को अनुमोदनार्थ प्रस्तुत करें।
To be resubmitted for approval after incorporating the comments.

IV. सूचनार्थ एवं रिकार्ड हेतु।
For information and record.

CATREL/ REL-CON निर्माण हेतु जारी।
Released for construction.

नोट/Note:

1. Approval/Comments conveyed herein neither relieve the contractor of his contractual obligations and his responsibilities, weights, quantities, design details assemble fits, performance particulars and conformity of the supplies with the Indian Statutory Laws as may be applicable, nor does it limits the purchaser's right under the contract.
2. The approval conveyed vide this letter does not cover the approval of make for sub-vendor items.

DRG. NO. TB202407-1002453-SC3540-765kV-ELEC-LAY

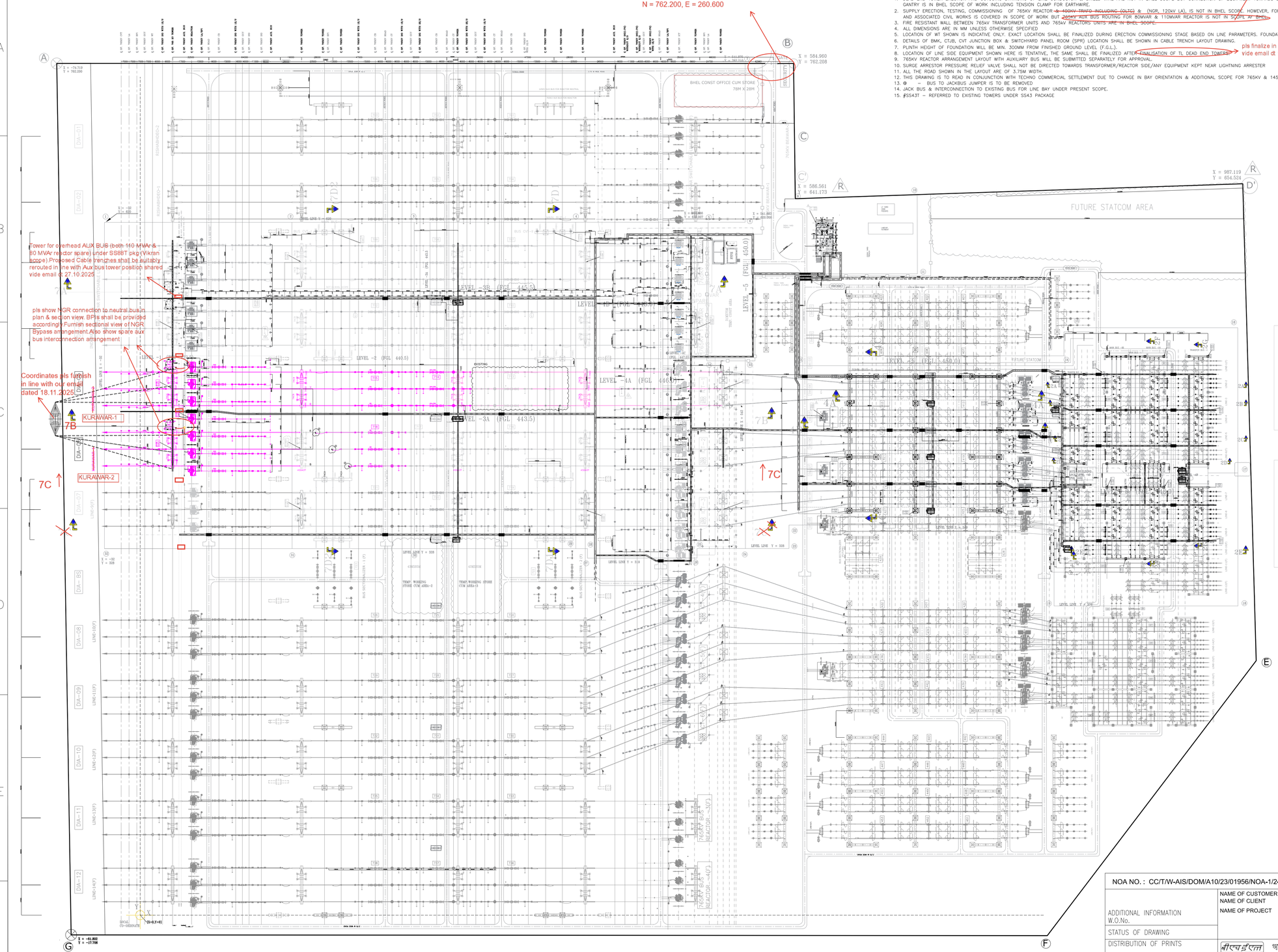

NOTES:

1. DEAD END TOWER ERECTION AND OUTGOING STRINGING OF LINE CONDUCTOR & SHIELD WIRE ARE NOT IN BHEL SCOPE BUT CONNECTION OF EQUIPMENT TOWARDS LINE SIDE SHALL BE DONE BY BHEL. SUPPLY OF TENSION INSULATOR STRING ON LINE SIDE OF TAKE OFF GANTRY IS IN BHEL SCOPE OF WORK INCLUDING TENSION CLAMP FOR EARTHWIRE.
2. SUPPLY ERECTION, TESTING, COMMISSIONING OF 765KV REACTOR ~~& 400KV TRAFO INCLUDING (OLTC)~~ & (NGR, 120kV LA), IS NOT IN BHEL SCOPE. HOWEVER, FORMATION OF HV, LV, TERTIARY, NEUTRAL & AUXILIARY BUSES ALONG WITH BUS & ITS STRUCTURE EARTHING AND ASSOCIATED CIVIL WORKS IS COVERED IN SCOPE OF WORK BUT ~~765KV AUX BUS ROUTING FOR 80MVAR & 110MVAR REACTOR IS NOT IN SCOPE AT BHEL~~
3. FIRE RESISTANT WALL BETWEEN 765kV TRANSFORMER UNITS AND 765kV REACTORS UNITS ~~ARE IN BHEL SCOPE~~
4. ALL DIMENSIONS ARE IN MM UNLESS OTHERWISE SPECIFIED
5. LOCATION OF WT SHOWN IS INDICATIVE ONLY. EXACT LOCATION SHALL BE FINALIZED DURING ERECTION COMMISSIONING STAGE BASED ON LINE PARAMETERS. FOUNDATION FOR WAVE TRAP SHALL BE CONSTRUCTED FOR ALL THREE PHASES.
6. DETAILS OF BMK, CT,LB, CVT JUNCTION BOX & SWITCHYARD PANEL ROOM (SPR) LOCATION SHALL BE SHOWN IN CABLE TRENCH LAYOUT DRAWING.
7. PLINTH HEIGHT OF FOUNDATION WILL BE MIN. 300MM FROM FINISHED GROUND LEVEL (F.G.L.).
8. LOCATION OF LINE SIDE EQUIPMENT SHOWN HERE IS TENTATIVE, THE SAME SHALL BE FINALIZED AFTER FINALISATION OF TL DEAD END TOWERS.
9. 765kV REACTOR ARRANGEMENT LAYOUT WITH AUXILIARY BUS WILL BE SUBMITTED SEPARATELY FOR APPROVAL.
10. SURGE ARRESTOR PRESSURE RELIEF VALVE SHALL NOT BE DIRECTED TOWARDS TRANSFORMER/REACTOR SIDE/ANY EQUIPMENT KEPT NEAR LIGHTNING ARRESTER
11. ALL THE ROAD SHOWN IN THE LAYOUT ARE OF 3.75M WIDTH.
12. THIS DRAWING IS TO READ IN CONJUNCTION WITH TECHNO COMMERCIAL SETTLEMENT DUE TO CHANGE IN BAY ORIENTATION & ADDITIONAL SCOPE FOR 765KV & 145KV AUX BUS ROUTING.
13. Φ – BUS TO JACKBUS JUMPER IS TO BE REMOVED
14. JACK BUS & INTERCONNECTION TO EXISTING BUS FOR LINE BAY UNDER PRESENT SCOPE.
15. #SS43T – REFERRED TO EXISTING TOWERS UNDER SS43 PACKAGE

FLAG MARK	EAST(m) X	NORTH(m) Y
A	517348	2677115
B	517864	2677526
C'	517940	2677433
D'	518245	2677688
E	518521	2677366
F	518528	2677057
G	517844	2676513

BILL OF QTY. FOR 765kV MAIN EQUIPMENTS:

SL.NO.	DESCRIPTION	RATING	S.C. RATING	NOA QTY. (NOJ)	SLD QTY. (NOJ)	SLD SYMBOL	LAYOUT SYMBOL	SCOPE OF SUPPLY	LEGEND	MAKE
1	80MVAR LINE REACTOR (1-PH) WITH NGR	765kV	50 KA FOR 1 S.	07	07			POWERGRID	LR/NGR	TBD
2	SF6 CIRCUIT BREAKER WITH CR. (3-PH)	765kV,3150A	50 KA FOR 1 S.	03	02 (ICT-1&2) 01 (ICT-3&4)			BHEL	52	TBD
3	SF6 CIRCUIT BREAKER (3-PH) WITHOUT CLOSING RESISTOR WITH CONTROL SWITCHING SUITABLE FOR 1-PH REACTOR SWITCHING	765kV, 3150A	50 KA FOR 1 S.	02	02			BHEL	52	TBD
4	SF6 CIRCUIT BREAKER WITHOUT CR.WITH CSD (1-PH) PROVISION	765kV, 3150A	50 KA FOR 1 S.	01	01			BHEL	52	TBD
5	ISOLATOR WITH ONE E/S (3 PH) VERTICAL KNEE TYPE	765kV, 3150A	50 KA FOR 1 S.	06	06			BHEL	89/89E	TBD
6	ISOLATOR WITH TWO E/S (3 PH) VERTICAL KNEE TYPE	765kV, 3150A	50 KA FOR 1 S.	02	02			BHEL	89/89E1 /89E2	TBD
7	ISOLATOR WITH ONE E/S (1 PH) VERTICAL KNEE TYPE	765kV, 2000A	50 KA FOR 1 S.	07	07			BHEL	89/89E1	TBD
8	ISOLATOR WITHOUT E/S	765kV, 2000A	50 KA FOR 1 S.	11	11			BHEL	89	TBD
9	CURRENT TRANSFORMER (1 PH.) WITH 125% EXTENDED CURRENT RATING.	3000A	50 KA FOR 1 S.	09	09			BHEL	CT	TBD
10	CVT (1 PH.)	8800pF	NA	06	06			BHEL	CVT	BHEL
11	SURGE ARRESTER (1 PH.)	624 kV	NA	13	13			BHEL	LA	TBD
12	WAVE TRAP (1 PH.) PEDESTAL TYPE.	1mH, 3150A	50 KA FOR 1 S.	04	04			BHEL	WT	TBD
13	765kV POST INSULATOR>8kN (EXCEPT WT)	765kV		33	21			BHEL	BPI	TBD
14	765kV POST INSULATOR (PART OF ERECTION HARDWARE)>8kN	765kV		LOT	12			BHEL	BPI	

NOA NO. : CC/T/W-AIS/DOM/A10/23/01956/NOA-1/24-102643/01

NAME OF CUSTOMER	POWERGRID CORPORATION OF INDIA LTD.
NAME OF CLIENT	765/400/220/132KV KURAWAR (NEW) SUBSTATION (II) EXTN. OF 400KV SHUJALPUR S/S (III) EXTN. OF 400KV ASHTHA S/S (IV) EXTN. OF 765KV MANDSAUR S/S 765KV AIS PKG SS-47T
NAME OF PROJECT	
ADDITIONAL INFORMATION W.O.No.	
STATUS OF DRAWING	
DISTRIBUTION OF PRINTS	

भारत हैवी इलेक्ट्रिकल्स लिमिटेड
BHARAT HEAVY ELECTRICALS LTD.
TRANSMISSION BUSINESS GROUP

	नाम /NAME	हस्ता./SIGN.	दि./DATE
बनाया DRAWN	JK	–SNG–	15.04.25
जाँचा CHECKED	JK	–SNG–	15.04.25
स्वीकृत APPROVED	VK	–SNG–	15.04.25

REV.	DATE	ALTERED / CHECKED / APPROVED	REV.	DATE	ALTERED / CHECKED / APPROVED	REV.	DATE	ALTERED / CHECKED / APPROVED
ZONE			3 ZONE	27.11.2025	REVISED FOR REACTOR OGA AND LINE CO-ORDINATE	2 ZONE	29.05.25	AS PER CUSTOMER COMMENT

विभाग DEPT. / कोड CODE / अनुपात / SCALE / कार्ड कोड CARD CODE / POWERGRID DRAWING NO.

शीर्षक/TITLE: SS47T-765kV MANDSAUR (EXTENSION) SS-ELECTRICAL LAYOUT PLAN & SECTION

ड्राईंग क्र./DRAWING NO.: TB202447-1002655-SC3540-ELEC LAY

पुनः/REV.: 3

पृष्ठ क्र./SHEET No. 01 अगला पृष्ठ /NEXT SHEET --

COPY RIGHT AND CONFIDENTIAL
THE INFORMATION ON THIS DOCUMENT IS THE PROPERTY OF BHARAT HEAVY ELECTRICALS LIMITED.
IT MUST NOT BE USED DIRECTLY OR INDIRECTLY IN ANY WAY DETRIMENTAL TO THE INTEREST OF THE COMPAY

COMPUTER DRG. PATH NAME :
REF. DRG. NO.
SIGN. AND DATE
INVENTORY NO

DRG. NO.
TB202447-1002453-SC3540-765kV-ELEC-LAY SEC

COPY RIGHT AND CONFIDENTIAL
THE INFORMATION ON THIS DOCUMENT IS THE PROPERTY OF BHARAT HEAVY ELECTRICALS LIMITED.
IT MUST NOT BE USED DIRECTLY OR INDIRECTLY IN ANY WAY DETRIMENTAL TO THE INTEREST OF THE COMPAY

COMPUTER DRG. PATH NAME :

REF. DRG. NO.

SIGN. AND DATE

INVENTORY NO

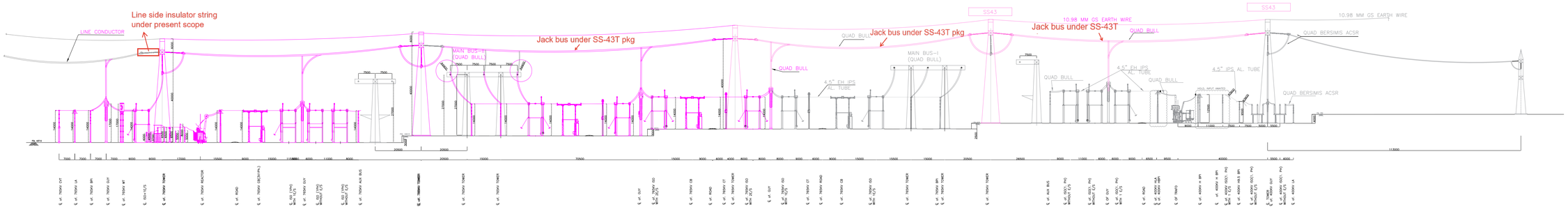

SECTION 7B–7B (765KV–KURAWAR ~~2~~ 1 LINE – TIE – ICT 1(EXISTING)

DIA–05

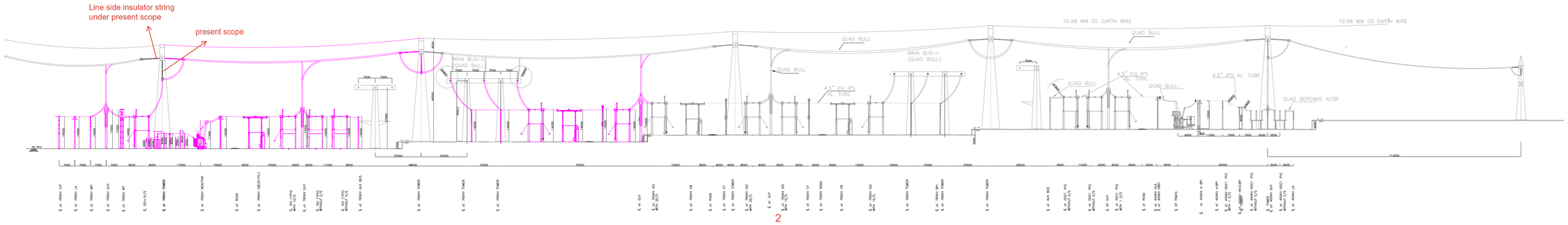

SECTION 7C–7C (765KV– KURAWAR ~~1~~ 2 LINE–TIE (EXISTING)–ICT 2(EXISTING))

DIA–06

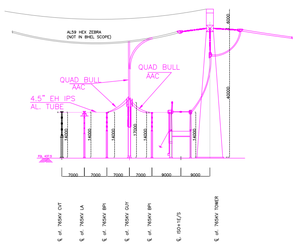

765KV LINE WITHOUT WAVE TRAP
(TYPICAL SECTION)

NOA NO. : CC/T/W-AIS/DOM/A10/23/01956/NOA-1/24-102643/01

ADDITIONAL INFORMATION
W.O.No.

STATUS OF DRAWING

DISTRIBUTION OF PRINTS

NAME OF CUSTOMER
NAME OF CLIENT
NAME OF PROJECT

POWERGRID CORPORATION OF INDIA LTD.
765/400/220/132KV KURAWAR (NEW) SUBSTATION (II) EXTN. OF 400KV SHUJALPUR S/S (III) EXTN. OF 400KV ASHTHA S/S (IV) EXTN. OF 765KV MANDSAUR S/S 765KV AIS PKG SS-47T

भारत हेवी इलेक्ट्रिकल्स लिमिटेड
BHARAT HEAVY ELECTRICALS LTD.
TRANSMISSION BUSINESS GROUP

	नाम /NAME	हस्ता./SIGN.	दि./DATE
बनाया DRAWN	JK	–SNG–	15.04.25
जाँचा CHECKED	JK	–SNG–	15.04.25
स्वीकृत APPROVED	VK	–SNG–	15.04.25

REV.	DATE	ALTERED		REV.	DATE	ALTERED	RT	REV.	DATE	ALTERED	RT
03	27.11.25	CHECKED		02	07.04.2025	CHECKED	JK	01	18.03.25	CHECKED	JK
		APPROVED				APPROVED	VK			APPROVED	VK
ZONE	REVISED FOR REACTOR OGA AND LINE CO–ORDINATE			ZONE	AS PER POWERGRID COMMENTS			ZONE	AS PER POWERGRID COMMENTS		

विभाग DEPT.
कोड CODE
अनुपात / SCALE
कार्ड कोड CARD CODE

शीर्षक/TITLE
SS47T-765kV MANDSAUR (EXTENSION)
SS-ELECTRICAL LAYOUT PLAN & SECTION

POWERGRID DRAWING NO.

ड्राईंग क्र./DRAWING NO.
TB202447–1002655–SC3540–ELEC LAY

पुनः/REV. 3

पृष्ठ क्र./SHEET No. 01 अगला पृष्ठ /NEXT SHEET 02

CONTENTS

SL.NO.	PARTICULARS	PAGE NOS
PRE-COMMISSIONING PROCEDURES FOR SWITCHYARD EQUIPMENTS		1
TRANSFORMER AND REACTOR		1
2.1	Checks after receipt of Transformer/Reactor at site	4
2.2	Insulating oil	5
2.3	Internal Inspection	6
2.4	Precautions during erection	7
2.5	Final tightness test with vacuum (i.e. leakage test or Vacuum Drop Test)	9
2.6	Oil filling	10
2.7	Hot oil Circulation using High Vacuum Filter Machine	13
2.8	Procedure for Dry Out of Wet Winding of Transformer/Reactor by Vacuum Pulling,N2 filling and Heating	14
2.9	Relation between different units (conversion of units)	16
PRE-COMMISIONING CHECKS/ TESTS FOR TRANSFORMER & REACTOR		17
3.1	Core Insulations Check	18
3.2	Earth Pit Resistance Measurement	19
3.3	Insulation Resistance (IR) Measurement	20
3.4	Capacitance & Tand Measurement of Bushing	21
3.5	Capacitance and Tand measurement of windings	24
3.6	Turns ratio (Voltage ratio) measurement	25
3.7	Vector Group & Polarity	25
3.8	Magnetic Balance test	26
3.9	Floating Neutral point measurement	27
3.10	Measurement of Short Circuit Impedance	27
3.11	Exciting/Magnetising current measurement	28
3.12	Operational checks on OLTCs	28
3.13	Tests/Checks on Bushing Current Transformer (BCT)s	29
3.14	Operational checks on Protection System	29
3.15	Stability Test of Differential, REF of Transformers/Reactor	30
3.16	Frequency Response Analysis (FRA) measurement	32
3.17	Winding resistance measurement	33
3.18	Dissolved Gas Analysis (DGA) of oil sample	34
CHECK LIST FOR ENERGISATION OF TRANSFORMER/ REACTOR		35
4.1	Preliminary checks	35
4.2	Checking of auxiliary and protective ciruits	36

SL.NO	PARTICULARS	PAGE NOS
	POST COMMISSIONING CHECKS/ TESTS FOR TRANSFORMERS AND REACTORS	38
5.1	Thermovision scanning (IR thermography)	38
5.2	Online Moisture Measurement	38
5.3	Vibration measurement of Oil- immersed reactor	38
	PRE-COMMISSIONING CHECKS/ TESTS FOR OTHER SWITCHYARD EQUIPMENTS	39
6.1	Capacitance & Tand Measurement of CT, CVT, CB voltage grading capacitor & Surge Arresters	42
6.2	Checks/ tests applicable for Cts	43
6.3	Checks/ tests application for Circuit Breakers	47
6.4	Checks / Test applicable for CVTs	54
6.5	Checks/ tests applicable for Isolator	55
6.6	Checks/ tests applicable for Surge Arrester	55
6.7	Checks/ tests applicable for other areas/equipments	56
	BUS BAR PROTECTION	59
7.1	High Impedance Protection	59
7.2	Low Impedance Protection	60
7.3	Primary injection and bus bar differential stability test (New Substation)	61
7.4	Primary injection and bus bar differential stability test (Bay Extension in the old substation)	62
7.5	Scheme Checking of bus bar protection & DC trip logic. (New substation & Bay extension)	64
7.6	AMP Testing of bus bar protection and scheme	65
7.7	Double main transfer scheme (400kV/220kV)	66
7.8	Scheme checking of bus bar protection & DC trip logic. (New substation & Bay extension)	73
7.9	AMP testing of bus bar protection and scheme	74
	PRE-COMMISSIONING FORMATS FOR SWITCHYARD EQUIPMENT	
1	No. CF/ICT/01/ R-4 DATED 01/04/2013 ICT	75
2	No. CF/SR/02/ R-4 DATED 01/04/2013 SHUNT REACTOR	106
3	No. CF/CB/03/ R-4 DATED 01/04/2013 CIRCUIT BREAKER	126
4	No. CF/CT/04/ R-4 DATED 01/04/2013 CURRENT TRANSFORMER	140
5	No. CF/CVT/05/ R-4 DATED 01/04/2013 CVT	151
6	No. CF/BAY/06/ R-4 DATED 01/04/2013 BAY/FEEDER	156
7	No. CF/ISO/07/ R-4 DATED 01/04/2013 ISOLATOR/GROUND SWITCH	166
8	No. CF/SA/08/ R-4 DATED 01/04/2013 SURGE ARRESTER	171
9	No. CF/WT/09/ R-4 DATED 01/04/2013 WAVE TRAP	174
10	No. CF/C&P/10/ R-4 DATED 01/04/2013 CONTROL & PROTECTION	176

PRE-COMMISSIONING CHECKS/TESTS FOR OTHER SWITCHYARD EQUIPMENTS

Once erection is completed, various pre-commissioning checks/ tests are performed to ensure the healthiness of the switchyard equipments prior to their energisation. Various major electrical tests to be performed and their significance are given below:

Sr. No.	Name of Test / Check point	Purpose of test/ check
6.1	Tan δ & Capacitance measurement of CT, each stack of CVT & total capacitance, CB voltage grading capacitor & each stack of Surge Arresters	The purpose of the dissipation factor measurement of high voltage insulation is to detect incipient weaknesses in HV insulation. The most important benefit to be gained from this measurement is to obtain a "benchmark reference reading" on costly and high voltage equipment when the equipment is new and insulation is clean, dry and free from impurities. Tan delta & Capacitance values shall be comparable with factory test results and in no case shall be more than 0.5 %.
6.2	**Checks/ Tests applicable for CTs**	
6.2.1	Polarity test for CT	To ascertain whether the polarity markings are correct or not as per drawing.
6.2.2	Magnetization characteristics of CT	To prove that the turns of CTs secondary windings are not short circuited and to check healthiness of CT cores. The magnetizing currents at KPV (Knee point voltage) shall be less than the specified value. The ratio of secondary and primary voltage shall also be measured.
6.2.3	Ratio test for CT	The ratio errors of the primary to the secondary currents should within specified ratio errors.
6.2.4	IR measurement of CT (Primary & Secondary windings)	Changes in the normal IR value of CT indicate abnormal conditions such as presence of moisture, dirt, dust, crack in insulator of CT and degradation of insulation.
6.2.5	DGA test of CT oil	This test shall be conducted after 30 days of commissioning. The purpose is to identify evolving faults in the CT and DGA values shall be comparable with factory values (if available)
6.3	**Checks/ Tests applicable for Circuit Breakers**	
6.3.1	Dew point measurement of SF6 gas	Dew point of SF6 gas is to measure moisture content in SF6 gas which shall indicate whether CB evacuation is done properly or not. This test shall be carried out preferably at rated pressure of SF6 gas.
6.3.2	Measurement of Circuit	To measure closing/ tripping/ CO timings. These timings

Sr. No.	Name of Test / Check point	Purpose of test/ check
	Breaker Operating Timings including PIR Timings	should be within permissible limits and shall be comparable with factory values. Pole discrepancies and Break to Break discrepancies shall be less than specified values.
6.3.3	DCRM Contact Travel Measurement / DC injected currents and trip/ close coil currents.	DCRM is the technique for measuring Contact Resistance during operation (Close/ Trip) of a circuit breaker with a delay Tco of 300ms. A DC current of at least 100 Amp is injected through the circuit breaker. The current and voltage drop are measured and resistance is calculated. The resistance and travel versus time data provides useful information on the condition of the circuit breaker contacts and is used as a diagnostic tool. DCRM test signatures shall be approved by Corporate OS.
6.3.4	Operational lockout checking for EHV Circuit Breakers	To ensure various lockout operation of CB by simulating the actual conditions at the specified pressure of oil/ air/ operating medium.
6.3.5	Measurement of static contact resistance	This test is conducted to evaluate healthiness of Main contacts. 100 Amp DC is injected and voltage drop is measured across each CB contact to compute contact resistance.
6.3.6	Checking the Anti-Pumping feature	By giving simultaneous close/ trip commands, CB hunting shall not take place by operation of Mechanical/ Electrical anti pumping feature.
6.3.7	Checking the Anti-Condensation Heaters	To check correct operation of Thermostat provided for anti condensation heaters.
6.3.8	Pole discrepancy relay testing	To test tripping of CB in case of pole discrepancy more than 2.5 seconds or specified value.
6.3.9	Checking the N2 priming pressure	This test is to check healthiness of N2 accumulators provided in Hydraulic drive mechanisms. N2 priming pressure shall be as per the rated pressure.
6.4	**Checks/ Tests applicable for CVTs**	
6.4.1	CVT polarity, Ratio test	This test is conducted in the same manner as for CT to determine correct CVT polarity, ratio and phasor group.
6.4.2	Insulation resistance measurement of Primary & secondary winding	Changes in the normal IR value of CVT indicate abnormal conditions such as presence of moisture, dirt, dust, crack in insulator of CVT and degradation of insulation.
6.5	**Checks/ Tests applicable for Isolators**	
6.5.1	MILLIVOLT Drop test	The voltage drop gives a measure of resistance of current carrying part and contacts by injecting minimum 100 A DC current.

Sr. No.	Name of Test / Check point	Purpose of test/ check
6.5.2	50 operation tests	To test operation of contacts etc with jumpers connected and contact resistance to be measured after 50 operations. There shall not be any change from the previous value.
6.6	**Checks/ Tests applicable for Surge Arrestors**	
6.6.1	Third Harmonic Resistive Current (THRC) for surge arrestors	To monitor healthiness of Surge arrestors by monitoring third harmonic resistive current from the leakage current. This test is to be conducted after charging of Las. The value of THRC shall be less than 30 µA.
6.6.2	IR measurement of each stack of LA	Changes in the normal IR value of LA indicate abnormal conditions such as presence of moisture, dirt, dust, crack in insulator of LA and degradation of insulation.
6.6.3	Checking of operation of LA counter	This test is done to check the healthiness of LA counter.
6.7	**Checks/ Tests for other areas/ equipments**	
6.7.1	Earth resistance measurement	To ensure value of earth resistance is below 1 ohm.
6.7.2	Secondary current injection test	Conducted for testing of protecting devices, circuit breakers, trip coils, motor overloads etc.
6.7.3	Contact Tightness check of Bay contacts by Primary injection method	Since complete bay contact resistance measurement is practically not possible because DC current may not be injected in CT primary, hence contact tightness check by primary injection method has been introduced to check overall contact tightness.
6.7.4	Stability check for Bus Bar	This test is performed to check the proper operation of Bus Bar protection by simulating actual conditions. Any problem in CT connection, wrong cabling, relay setting can be detected by this test.

6.1 TAN DELTA & CAPACITANCE MEASUREMENT OF CT, CVT, CB VOLTAGE GRADING CAPACITORS AND LA STACKS

To measure dissipation factor/loss factor (Tan delta) and Capacitance measurement of EHV class CTs, CVTs, CB Voltage Grading Capacitors & LA stacks by applying test voltages up to 10kV.

A) CURRENT TRANSFORMERS

CTs with test taps

1. Tan delta tap to be disconnected from ground.
2. High voltage lead from tan delta kit to be connected to primary(HV) Terminal and LV lead to be connected to the Tan delta test tap.
3. P1 and P2 to be shorted
4. Porcelain surface to be thoroughly cleaned.
5. Measurements have to be taken in UST mode with fully automatic test kit.
6. Standard procedure(as specified by kit supplier) for measuring capacitance and tan delta in charged switchyard/induced voltage conditions should be followed for measurement of capacitance and tan delta values.
7. It is to be ensured to connect the test tap to ground terminal after carrying out the test.

B) CB VOLTAGE GRADING CAPACITOR

1. Connect LV cable to the middle of the double interrupter.
2. Connect HV cable to the other end of the Grading capacitor to be tested.
3. The opposite end of the grading capacitor has to be grounded using earth switch.
4. Measurements have to be taken in UST Mode with fully automatic test kit.
5. Disconnect the HV cable and connect the same to the other grading capacitor and ground the previous grading capacitor. Now the second grading capacitor is ready for testing.
6. Standard procedure (as specified by kit supplier) for measuring capacitance and tan delta in charged switchyard/induced voltage conditions should be followed
7. Measurements are to be carried out at 10 kV/ 12 KV.

C) CAPACITOR VOLTAGE TRANSFORMERS

1. Testing procedure for Top and Middle Stacks:
   (a) Apply 10 KV between flanges of Top/Middle stacks (whichever is being tested)
   (b) Carry out measurements in UST mode at 10.0 KV
   (c) While measuring Middle/ Bottom stacks, Top/ middle stacks to be shorted.

2. Testing procedure for Bottom Stack connected to EMU PT
   (a) Connect HV of the test kit at the top flange of bottom stack. HF point to be grounded. Earth connection of the neutral of the PT to be opened/ isolated from ground.
   (b) Top of CVT to be guarded. LV lead of the kit to be connected at the top of the CVT for guarding.

(c) Carry out measurements in GSTg mode at 10.0 KV
(d) Repeat the Test with neutral of PT connected to ground.
(e) In case Tan delta value is negative or erratic, only capacitance values are to be monitored.
(f) Measurement to be carried out using fully automatic kit.

3. Standard procedure (as specified by kit supplier) for measuring capacitance and tan delta in charged switchyard/ induced voltage conditions should be followed.

D) SURGE ARRESTERS

1. Testing procedure for Top, Middle and Bottom Stacks:
   (a) Apply 10 KV between flanges of Top/Middle/ Bottom stacks (whichever is being tested)
   (b) Carry out measurements in UST mode at 10.0 KV with fully automatic test kit.
   (c) While measuring Middle/ Bottom stacks, the stacks above the HV lead to be shorted.
2. Standard procedure (as specified by kit supplier) for measuring capacitance and tan delta in charged switchyard/ induced voltage conditions should be followed.
3. While doing measurement of bottom stack the earth connection to be removed.

6.2 CHECKS/ TESTS APPLICABLE FOR CTs

6.2.1 POLARITY TEST FOR CT

A centre zero voltmeter is connected across CT secondary. A 1.5 Volt battery is touched to primary of CT. The deflection of pointer should be similar in case of each CT core.

At any instant current entering the primary from P1 the current should leave secondary from the terminal marked S1. A setup shown in the Figure 9 can show whether the polarity markings are correct or not.

When the key is pressed, current enters the primary through terminal P1, the voltmeter connected as shown, should read positive. A general arrangement of polarity test setup is indicated in Fig. 10.

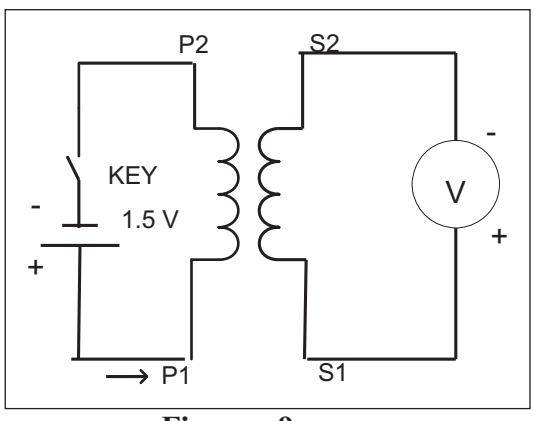

Figure - 9

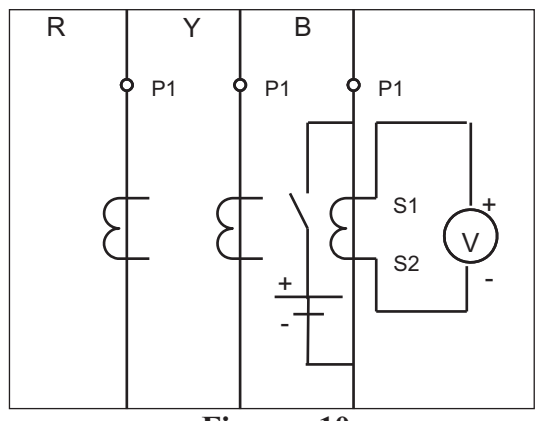

Figure - 10

6.2.2 MAGNETIZATION CHARACTERISTICS OF CTs

PRECAUTIONS

a) There should be no joints in testing leads/cables.
b) It should be ensured that whole testing equipment along with testing procedures are available at testing site. Testing must be carried out in presence of testing personnel only.

Test Equipment: Voltage source of 5 kV, Voltmeter of range 0 to 5 kV, Ammeter of range 0 to 500 Amps, testing leads/cables etc.

Test Procedure: Make connections as per diagram shown below (Fig- 11). After making proper connections, applied voltage is increased from zero to rated Knee Point Voltage in steps of 25%, 50%, 75% and 100%. Measure the current drawn by the CT secondary core at respective applied voltages and record the test results

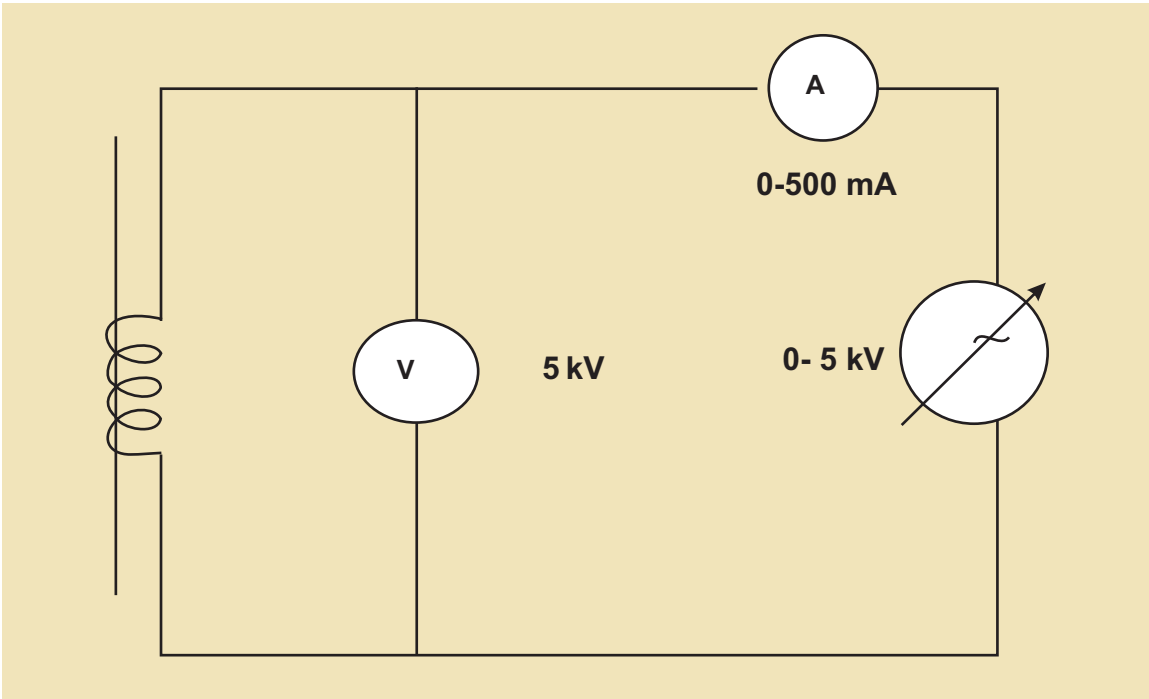

Figure - 11

Knee Point Voltage is normally defined as the voltage at which 10% increase in the applied voltage causes 30 to 50% increase in secondary current. The magnetization current at rated Knee Point Voltage should not be more than the specified/designed value. A curve can be drawn between applied voltage and magnetizing current. Typically, the curve drawn should be like the one given below in Fig.-12.

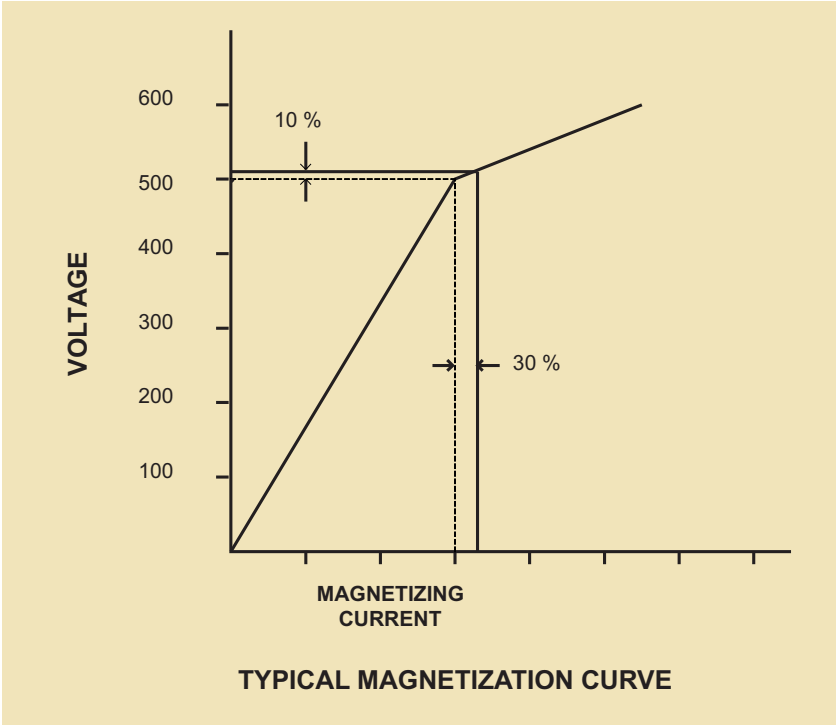

Figure - 12

From the curve it can be implied that up to rated KPV (Knee Point Voltage), the VI curve should be almost a straight line. However, if this line is not linear, this indicates that the magnetizing characteristics are not desirable. If the slop of the curve starts increasing, it indicates that magnetizing induction becomes low and total primary current is utilized in exciting the core alone. Consequently, out put of CT secondary disappears.

6.2.3 RATIO TEST FOR CURRENT TRANSFORMER

The ratio check has to be carried out as indicated in Fig-13 below.

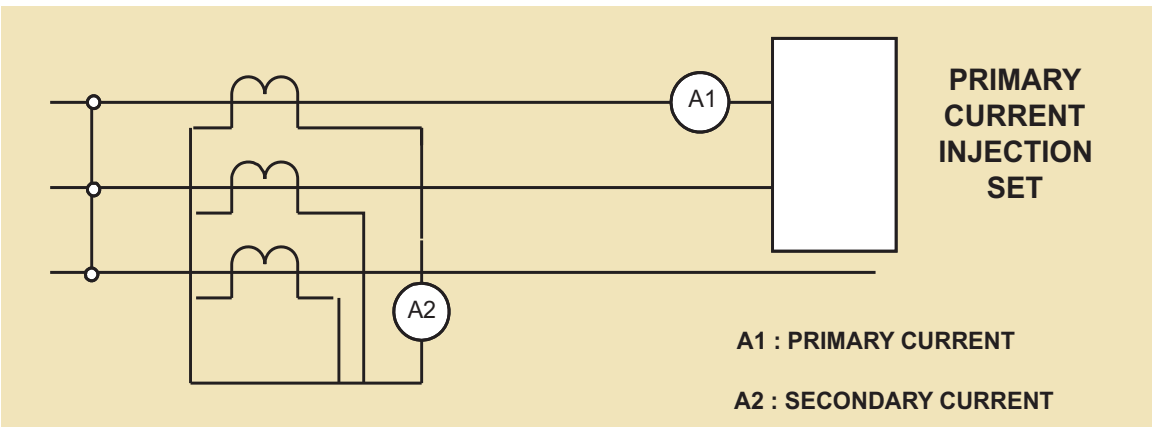

Figure - 13

It is customary to conduct this in conjunction with the primary injection test. Current is passed through the primary circuit with the secondary winding circuit to its normal circuit load. The ratio of the primary to the secondary currents should approximate closely to that stamped under CT identification plate.

Alternatively, ratio test is to be conducted as per the following method (Fig-14).

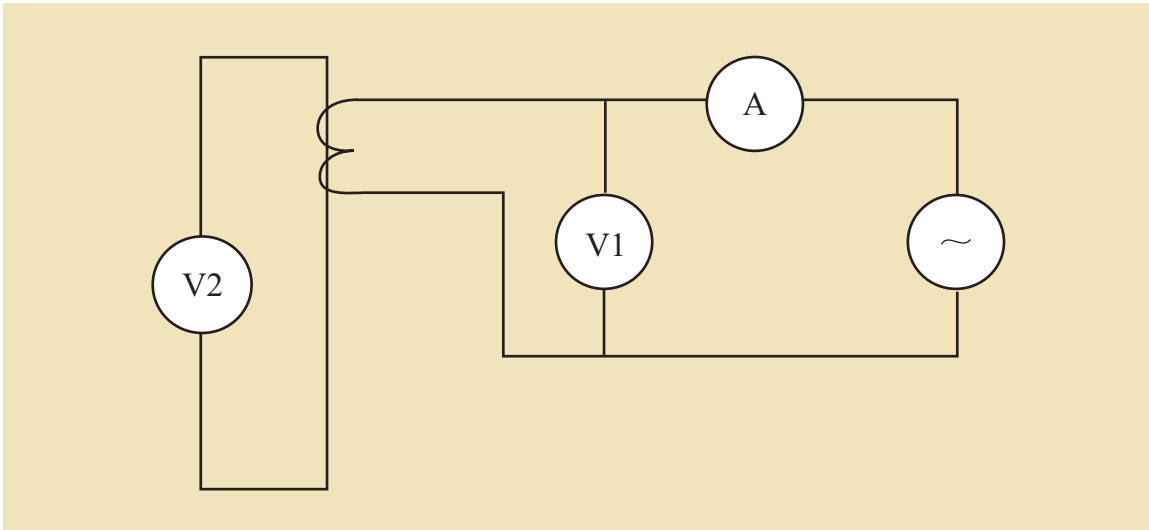

Figure - 14

Apply voltage from secondary of the CT and measure voltage in primary winding. Increase voltage in secondary up to rated KPV/ ISF and by recording Primary Voltage, compute ratio of V1/ V2. The ratio should match with the specified value.

6.2.4 INSULATION RESISTANCE MEASUREMENT OF CURRENT TRANSFORMER

PRECAUTIONS

a) There should be no joints in testing cables.

b) Test leads should not touch any live part.

c) Megger body should be earthed (if separate terminal is provided).

d) Surface/terminals should be cleaned.

e) IR measurement should be carried out preferably in dry and sunny weather.

f) Never connect the test set to energized equipment.

g) The ground terminal must be connected first and removed at last.

h) High voltage plugs should be free from moisture during installation and operation.

i) If oil traces are found on the surface of CT, the same should be cleaned by Methyl Alcohol only. Petrol or diesel should never be used.

j) It should be ensured that whole testing equipment along with testing procedures are available at testing site. Testing must be carried out in presence of testing engineer only.

k) After testing with high voltage, test terminals must be grounded before being touched by any personnel.

l) Test leads should be properly screened/ shielded.

Connect the Megger as per figure-15 given below. Connect the HV terminal to the Primary terminal of CT by using crocodile clip for firm grip

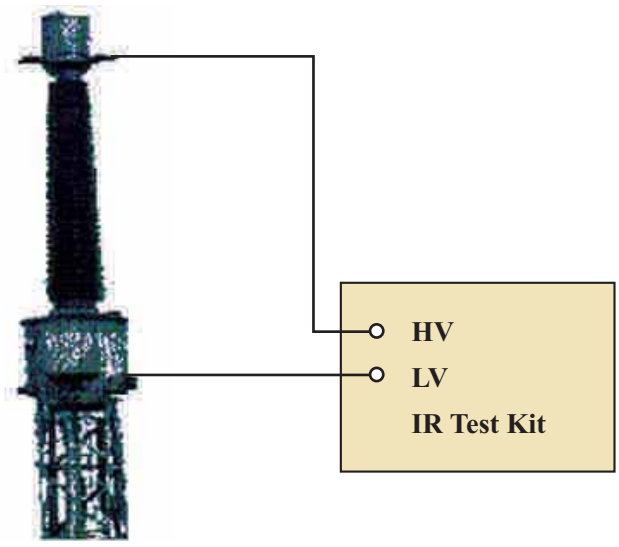

Figure-15 Typical Arrangement for IR measurement

Carry out the measurement as per standard procedure given by the kit supplier.

A test voltage as specified is applied as per the above connections and successive readings are taken. Values of IR should be recorded after 15 seconds, 60 seconds and 600 seconds. Ambient temperature and weather conditions are to be recorded.

6.2.5 DGA Test of CT Oil: Oil samples to be collected in 300ml bottles and to be sent to CIOTL Hyderabad for testing. Test results should be comparable to factory values. In case of any deviation, test results to be forwarded to CC-OS for approval.

6.3 CHECKS/ TESTS APPLICABLE FOR CIRCUIT BREAKERS

6.3.1 DEW POINT MEASUREMENT OF SF6 GAS FOR CIRCUIT BREAKER

Dew Point is the temperature at which moisture content in SF6 gas starts condensing.

Dew Point at rated pressure of CB: Dew Point when measured keeping regulating valve in service at the outlet of dew point kit to allow required flow rate of gas, is called at rated pressure of CB. Inlet valve is opened completely.

Dew Point at atmospheric pressure : Dew Point when measured by regulating the gas flow at the inlet of dew point kit and keeping outlet regulating valve (if provided) in fully open condition so that flow rate of gas is maintained as required, is called at atmospheric pressure.

TESTING PROCEDURE

a) Make the connections to the kit from CB pole ensuring that regulating valve is fully closed at the time of connections of the Dew Point kit.

b) By regulating the flow rate of SF6 gas (0.2 liter/min to 0.5 liter/min - ref. IEC 60480), the value of dew point is observed till it becomes stable.

c) If the regulating valve is provided at outlet of the dew point kit then values as given in Doc. no. for rated pressures are to be monitored.

Dew Point of SF6 gas varies with pressure at which measurement is being carried out. This is due to the fact that Saturation Vapour Pressure decreases with increase in Pressure of the SF6 gas. Hence, dew point of SF6 gas at higher pressure is lower than dew point at atmospheric pressure Therefore, it is to be ensured that if measurement has been done at a pressure other than the atmospheric pressure, same is to be converted to the atmospheric pressure as given in the table below used at the time of commissioning for various CB manufacturers: Method for converting dew point at different gas pressures, is given/described in IEC-60480.

Sl. No.	Make of CB	Dew point at rated pressure	Dew point at Atmospheric Pressure (Limit)
1	BHEL	(-) 15° C	- 36° C
2	M & G	-	- 39° C
3	CGL	(-) 15° C	- 35° C
4	ABB	(-) 15° C	- 35° C
5	NGEF	(-) 15° C	- 36° C

6.3.2 MEASUREMENT OF CIRCUIT BREAKER OPERATING TIMINGS INCLUDING PRE INSERTION RESISTOR TIMINGS

PRECAUTIONS

a) There should not be any joint in testing cables.
b) Test leads should not touch any live part.
c) Never connect the test set to energised equipment.
d) The ground cable must be connected first and removed at last.
e) High voltage plugs should be free from moisture during installation and operation.
f) Circuit Breaker Analyser body should be earthed (if separate earth is provided).
g) It should be ensured that whole testing equipment along with testing procedures are available at testing site. Testing must be carried out in presence of testing personnel only.
h) Surface/terminals should be cleaned where the connections for testing are to be made.
i) Clean earth point with sand paper/wire brush where earth terminal is to be provided.
j) Ensure that all the poles trip simultaneously through single close/trip command.

TESTING PROCEDURE

a) Make connections as shown in the figure-16 below. It is to be ensured that R, Y, B phase marking cables are connected with the proper place in the CB analyser and colour codes are to be maintained for all the three poles of CB.
b) Make connections for recording operating timings of Auxiliary contacts.
c) Extend power supply to Circuit Breaker Analyzer.
d) Give closing command to closing coil of CB and note down the PIR and main contact closing time. Take the print out from the Analyzer.

e) Give tripping command to trip coil-I of CB & note down the main contact tripping time.

f) Give tripping command to trip coil-II of CB & note down the main contact closing time.

g) Note down the timings for `CO', and `OCO' by giving respective commands. CO command to be given without time delay but 300ms time delay to be given between O and CO operation in testing for OCO.

h) To find out opening time of PIR contacts, PIR assembly has to be electrically isolated from Main contacts and then PIR contacts are to be connected to separate digital channels of the Analyzer.

EVALUATION OF TEST RESULTS

A) CLOSING TIMINGS

Closing timings and Discrepancy in operating times of PIR and main contacts should not exceed the permissible limits as specified in the DOC NO: D-5-02-XX-01-03. In any case, main contacts should not close prior to closing of PIR contacts and PIR contacts should not open prior to closing of main contacts. In case, contact bouncing is observed in operating timings for PIR and main contacts, same should be rectified by tightening the cable connections.

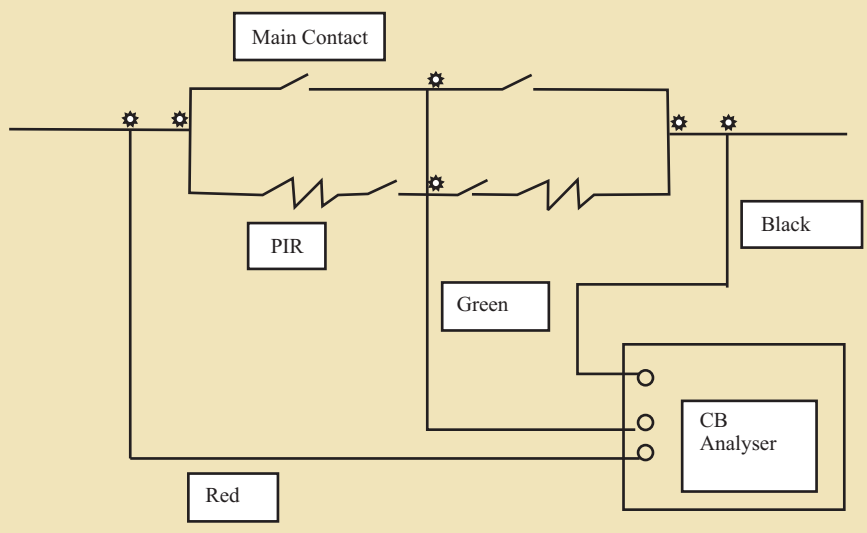

Typical Arrangement for Operating Timings Measurement of CB

Figure - 16

B) TRIPPING TIMINGS

Trip time and pole discrepancy in operating timings should not exceed beyond permissible value given in Doc. No. D-5-02-XX-01-03. In case of ABB, NGEF and CGL make CBs, while tripping, PIR contacts should not open after opening of main contacts.

C) 'CO' TIMINGS

CO timings should be within permissible limits as specified by different manufacturers. If operating timings of CB poles are not within limits, same may be corrected by:

1. Equalizing the SF6 gas pressure in all the poles
2. Adjusting plunger movement of trip/ close coils
3. Adjustment in operating mechanism
4. Changing of trip/ close coils (if required)

It is also important to measure timings of auxiliary contacts from the point of view of variations w.r.t. the main contacts.

6.3.3 DYNAMIC CONTACT RESISTANCE MEASUREMENT (DCRM) AND CONTACT TRAVEL MEASUREMENT OF EHV CIRCUIT BREAKERS

Test Equipment: 100 Amp. DCRM kit with CB operational analyzer with 10k Hz sampling frequency.

Isolation Required

a) CB should be in open position.

b) Isolator of both sides of CB should be in open position.

c) Earth switch of one side of CB should be in open position.

Precautions

a) There should be no joints in testing leads/cables.

b) It should be ensured that whole testing equipment along with testing procedures are available at testing site. Testing must be carried out in presence of testing personnel only.

c) Current leads should be connected such that voltage leads are not outside area of current flow.

Testing Procedure

1. Follow the standard procedure as given in instruction manual of DCRM kit.
2. The tightness of connections at CB flanges is most important to ensure error free measurement. CB during CO operation generates lot of vibrations and failure of connections during this period can dramatically change the dynamic signature of CB resistance.
3. DCRM signatures should be recorded for CO operation. Open command should be extended after 300 ms from the close command.
4. Clean portions of incoming and outgoing flanges of CB with polish paper to remove paint, oxidation etc, at points where Current clamps are mounted.
5. Select this point of connection, as close as possible to the end of porcelain insulator to ensure that minimum resistance is offered by flanges, bolts, terminal connectors etc.
6. It should be ensured that Travel Transducers are properly fitted.
7. Sampling frequency during measurement should be 10 KHz.
8. Resistance, travel, injected current and Trip/ Close coil currents are to be recorded.

The variations in the measured resistance versus time will be seen as a finger print for the breaker contacts and can be used as a bench mark for comparing with future measurements on the same breaker. This provides information on the condition of the breaker contacts, driving mechanism, operating levers etc.

Dynamic Contact Resistance Measurement for CB healthiness

By application of Dynamic Contact Resistance Measurement, condition of arcing contact, main contact, operating levers, driving mechanism can be predicted. If DCRM signature shows vide variations and also there is change in arcing contact insertion time, it indicates erosion of the arcing contacts to main contacts and subsequent failure.

Contact Travel Measurement

Transducers are attached to the operating rod or interrupting chamber in order to record the contact travel. When CB closes, contact travel is recorded. Contact bounces or any other abnormality is also clearly indicated by the Contact Travel Measurement.

If contact travel, contact speed and contact acceleration signature are compared with the original signatures, then it may indicate problems related with the operating mechanism, operating levers, main/ arcing contacts, alignments etc.

DCRM along with Contact Travel measurement is useful in monitoring length of Arcing contacts. Erosion of Arcing contacts may lead to commutation failures and current may get transferred to Main contacts. Due to heat of arc, main contacts may get damaged.

6.3.4 OPERATIONAL LOCKOUT CHECKING FOR EHV CIRCUIT BREAKERS

6.3.4.1 TESTING PROCEDURE:

A. SF6 GAS PRESSURE LOCKOUT

a) LOW PRESSURE ALARM

Close Isolation Valve between CB Pole(s) and density monitor. Start releasing SF6 gas from density monitor till the low pressure gas alarm contacts are actuated which is detected by Multimeter. Note down the pressure and temperature at which the contacts get actuated.

b) OPERATIONAL LOCKOUT:

Continue releasing SF_6 gas from isolated zone till the operational lockout Alarm Contacts are actuated which are detected by Multimeter. Note down the pressure and temperature at which the contacts get actuated. This is called operational lockout pressure.

B. PNEUMATIC OPERATING SYSTEM LOCKOUT

a) COMPRESSOR START/STOP SWITCH

Close the isolating valve of CB. Release air into atmosphere from the compressor. Note down the value of pressure at which Compressor starts building up air pressure and pressure at which Compressor stops.

b) CB AUTO RECLOSE LOCKOUT

Close isolation valve between pneumatic system and pressure switches. Release air from the isolated zone to atmosphere. Note down pressure at which A/R L/O contacts of pressure switch get actuated which are detected by Multimeter. The leads of the Multimeter should be connected to the contactor where the AR L/O of CB are made.

c) CB CLOSING LOCKOUT

Release air from the isolated zone to atmosphere. Note down pressure at which CB Closing L/O contacts of pressure switch get actuated which are detected by Multimeter.

d) CB OPERATIONAL LOCKOUT

Release air from the isolated zone to atmosphere. Note down pressure at which CB Operational L/O contacts of pressure switch get actuated which are detected by Multimeter.

e) MECHANICAL CLOSING INTERLOCK (FOR ABB & BHEL CBs ONLY)

CB should be in closed position. Release air from pneumatic system of CB to atmosphere and observe whether CB poles start opening, if so, note down the pressure at which tie rod starts coming down. In such case the closing interlock is to be opened for inspection and if required, replace the closing interlock.

C. HYDRAULIC OPERATING SYSTEM LOCKOUT

a) Pump START/STOP

By opening pressure release valve, note down the pressure at which Pump starts building up oil pressure and pressure at which pump stops.

b) CB AUTO RECLOSE LOCKOUT

Close Isolation valve between hydraulic system and pressure switches. Release oil from the isolated zone to oil tank. Note down pressure at which A/R L/O contacts of pressure switch get actuated which are detected by Multimeter.

c) CB CLOSING LOCKOUT

Release oil from the isolated zone to oil tank. Note down pressure at which CB Closing L/O contacts of pressure switch get actuated which are detected by Multimeter.

d) CB OPERATIONAL LOCKOUT

Release oil from the isolated zone to container. Note down pressure at which CB Operational L/O contacts of pressure switch get actuated which are detected by Multimeter.

D. OPERATING PRESSURE DROP TEST:

For Pneumatic/ Hydraulic operating system, operating pressure drop test to be performed during OCO operation of CB, keeping AC supply of Hydraulic pump/ Compressor in off condition. Hydraulic/ Pneumatic pressure drop should be within limits (as recommended by Manufacturer)

6.3.4.2 EVALUATION OF TEST RESULTS

A. SF6 GAS PRESSURE LOCKOUT

All the SF6 gas pressure switches settings should be checked and corrected with ambient temperature. Settings of SF6 gas pressure switches should be within ± 0.1 bar/ Kg/cm^2 of the set value (after taking into account the temperature correction factor).

B. AIR PRESSURE LOCKOUT

All the air pressure switches settings should be checked and corrected and should be within ± 0.3 bar/ Kg/cm^2 of the set value.

C. OIL PRESSURE LOCKOUT

All the oil pressure switches settings should be checked and corrected and should be within ± 0.3 bar/ Kg/cm^2 of the set value.

6.3.5 MEASUREMENT OF STATIC CONTACT RESISTANCE

The Static contact resistance of main circuit of each pole of a circuit breaker is of the order of a few tens of micro ohms. 100 A DC is injected and milli volt drop is measured across each CB contact to compute contact resistance. The values should be within specified limits.

6.3.6 CHECKING THE ANTI-PUMPING FEATURE

When the breaker is in open position and closing and opening commands are given simultaneously the breaker first closes and then opens, but does not reclose even though the closing command is maintained.

6.3.7 CHECKING THE ANTI-CONDENSATION HEATERS

Check the supervisory circuit of the anti-condensation heaters for correct functioning. With the heaters switched ON, measure their current output.

6.3.8 POLE DISCREPANCY RELAY TESTING

Pole Discrepancy is defined as the difference in closing & opening timings of different poles of CB.

A. WHEN CB IN OPEN POSITION

Closing Command is extended to close one pole, say R-Pole, of CB. After closing R-Pole of CB, this Pole should automatically open after 2.5 seconds (as per pole discrepancy timer settings). Repeat the test for remaining two poles of CB.

B. WHEN CB IN CLOSED POSITION

Tripping Command is extended to trip one pole, say R-Pole, of CB. Remaining Y and B- Poles of CB should automatically open after 2.5 seconds. Repeat the same test for remaining two poles of CB.

C. EVALUATION OF TEST RESULTS

Permissible value of pole discrepancy between two poles of CB is 3.33 msec. from system point of view and it should not be confused with the setting of pole discrepancy timer which is generally 1.0 or 2.5 sec. depending on Auto-reclose scheme.

6.3.9 CHECKING THE NITROGEN PRIMING PRESSURE

Close the pressure release valve. Shortly after the oil pump starts, the priming pressure (200 bar at 20 °C) in the accumulator can be read. The relationship between the pressure and temperature is indicated in Fig. 17.

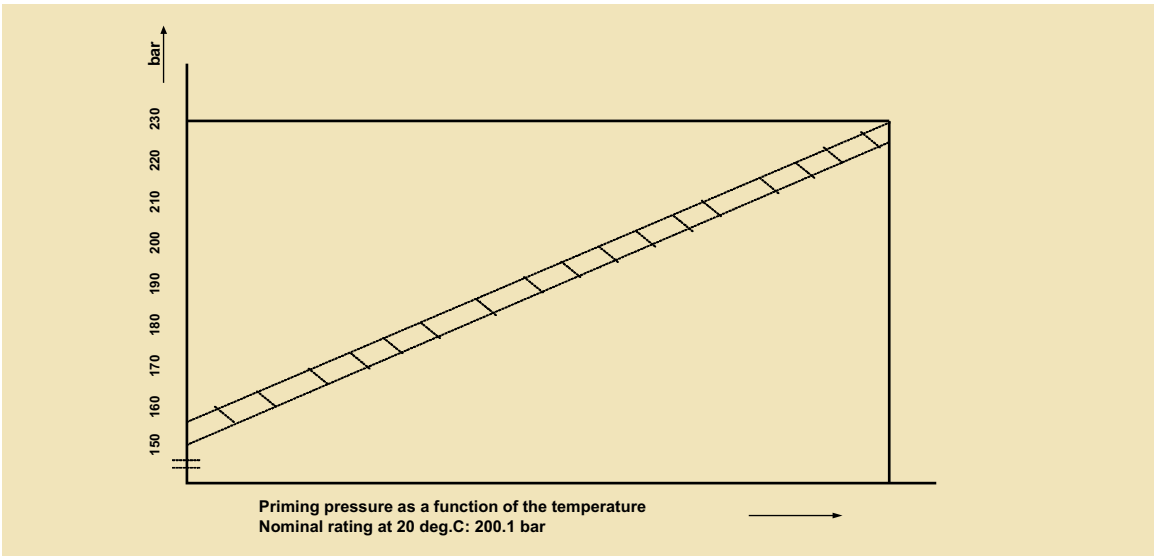

Figure - 17

6.4 CHECKS/ TESTS APPLICABLE FOR CVTs

6.4.1 CVT POLARITY, RATIO TEST

CVT polarity is checked in the same manner as for CT, taking care to ensure that the battery is connected to the primary winding. In case of star/star winding configuration care has to be taken to ensure that the primary and secondary neutral points are not connected together. It is necessary to verify that the phase rotation sequence of the 3 phase CVT is correct. The secondary voltage between phases and neutral are measured and then phase rotation meter is connected across the three phase terminal.

6.4.2 INSULATION RESISTANCE MEASUREMENT OF PRIMARY & SECONDARY WINDING

6.5 CHECKS/ TESTS APPLICABLE FOR ISOLATORS

6.5.1 MILLI VOLT DROP TESTS

The milli volt drop across the isolator is measured using DC current. The voltage drop gives a measure of resistance of current carrying part and contacts.

The DC current should be equal to or more than 100 A. The resistance of isolator should be measured at ambient air temperature. The temperature of specimen/environmental temperature should be recorded. The value of measured resistance should be converted to the value of temperature at which factory test results are taken. Temperature corrected value of resistance should be comparable to the factory value.

6.5.2 50 OPERATION TESTS

6.6 CHECKS/ TESTS APPLICABLE FOR SURGE ARRESTERS

6.6.1 MEASUREMENT OF THIRD HARMONIC RESISTIVE CURRENT FOR SURGE ARRESTERS

Testing Procedure

a. Make the connections as per the diagram given below (Fig.18)
b. The kit should be properly earthed.
c. Clamp On type CT should be placed above the surge monitor to pick up the total leakage current.
d. Carryout the measurements as per standard procedure supplied by the test kit manufacturer.
e. Note down the system voltage and ambient temperature along with the test current value.
f. Avoid measurement during monsoon.

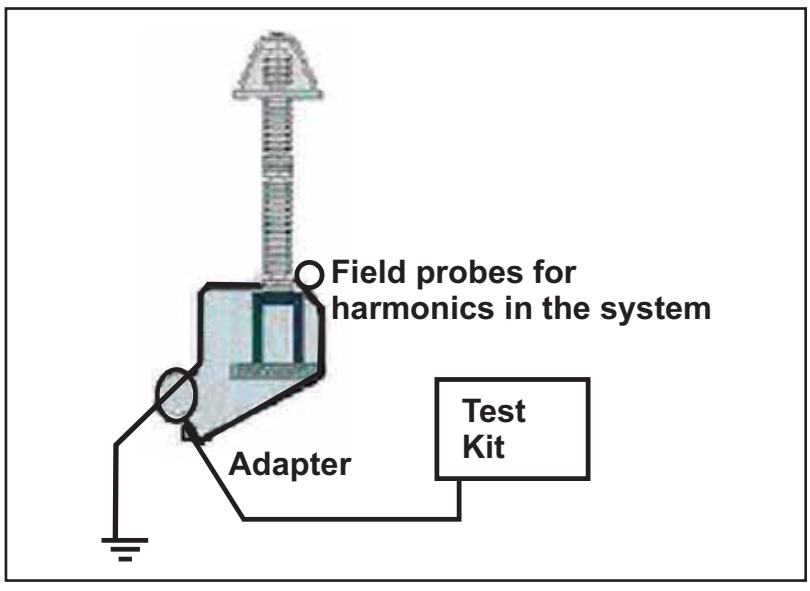

Figure- 18 Typical arrangement for THRCM Test

EVALUATION OF TEST RESULTS

A. ZnO Surge Arrester continuously conducts a small leakage current (Fig.19). The resistive component of this leakage current may increase with time due to different stresses causing ageing and finally cause arrester failure.

B. If Harmonics are present in the system voltage, it affects the value of measured third harmonic current. Compensating device provided to be used to nullify the effect. The value of Third Harmonic Resistive current shall be less than 30 µA

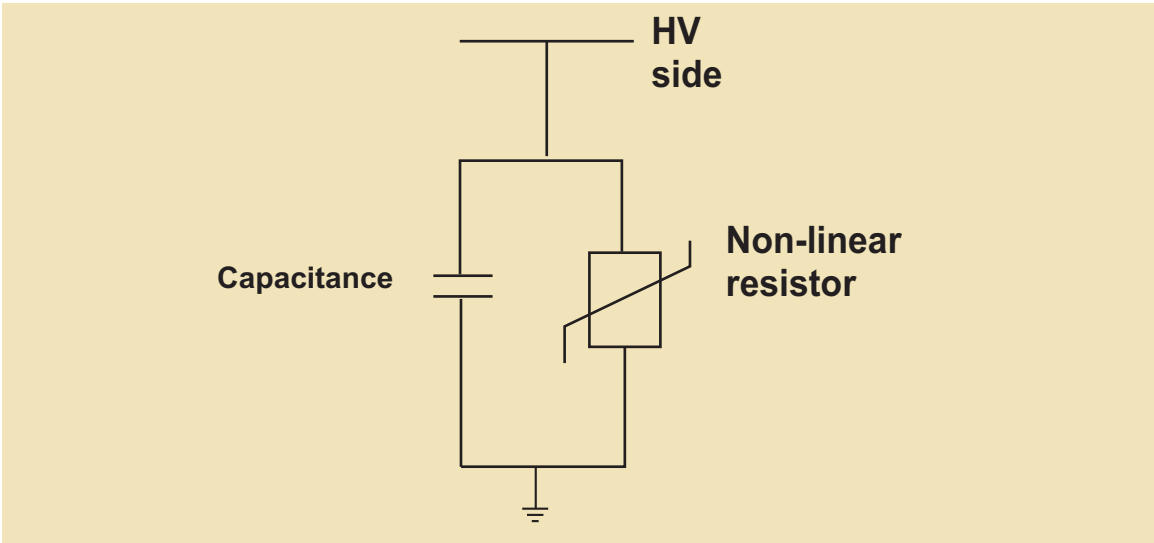

Figure-19 Arrester equivalent circuit

6.7 CHECKS/ TESTS FOR OTHER AREAS/ EQUIPMENTS

6.7.1 EARTH RESISTANCE MEASUREMENT

Normally Earth tester is used for measuring

(a) Soil resistivity

(b) Earth resistance

a. Prior to the testing of soil resistivity and earth resistance the operation manual of the testing instrument available at site may be referred for procedures to be adopted for measurement of soil resistivity and earth resistance.
A typical earth tester has 4 terminals. C1, P1, C2, P2 and 4 similar electrodes are driven in the ground at equal distances and connected to the instruments in the order of C1, P1 and P2, C2. Then the handle is rotated or button is pressed and the reading of the resistance is read on the scale of the instrument. If R is the resistance measured then

Specific Resistivity = 2π a R

Where 'a' is the distance between the electrode

And R is the resistance in ohms measured on the earth tester.

b. In order to measure earth resistance of the electrode of the substation, it could be connected to C1 and the value of R could be read in the scale with the rotation of the handle of the Insulation tester. This will give the earth resistance. The value as far as possible should be around 1 ohm. To improve the value, water should be spread at the earth pit.

6.7.2 SECONDARY CURRENT INJECTION TEST SETS

The primary test is essential when commissioning and new installation as a test the whole protection system and will detect current transformers connected with incorrect polarity or relays that have been set in the wrong sequence in differential system. Secondary current injection sets are very useful for conducting these tests. The standard secondary current injection test equipment consists of a 1/5 A current injection set, separate wave form filter unit and a digital counter. The equipment is designed in a portable kit for on site testing of protecting devices, circuit breakers, trip coils, motor overloads, and similar apparatus. The filter unit should be used when testing saturating core type relays to ensure that the test current has a substantially sinusoidal waveform. The typical test setup is shown in fig. 20. Details of the testing will be elaborated in the relay testing.

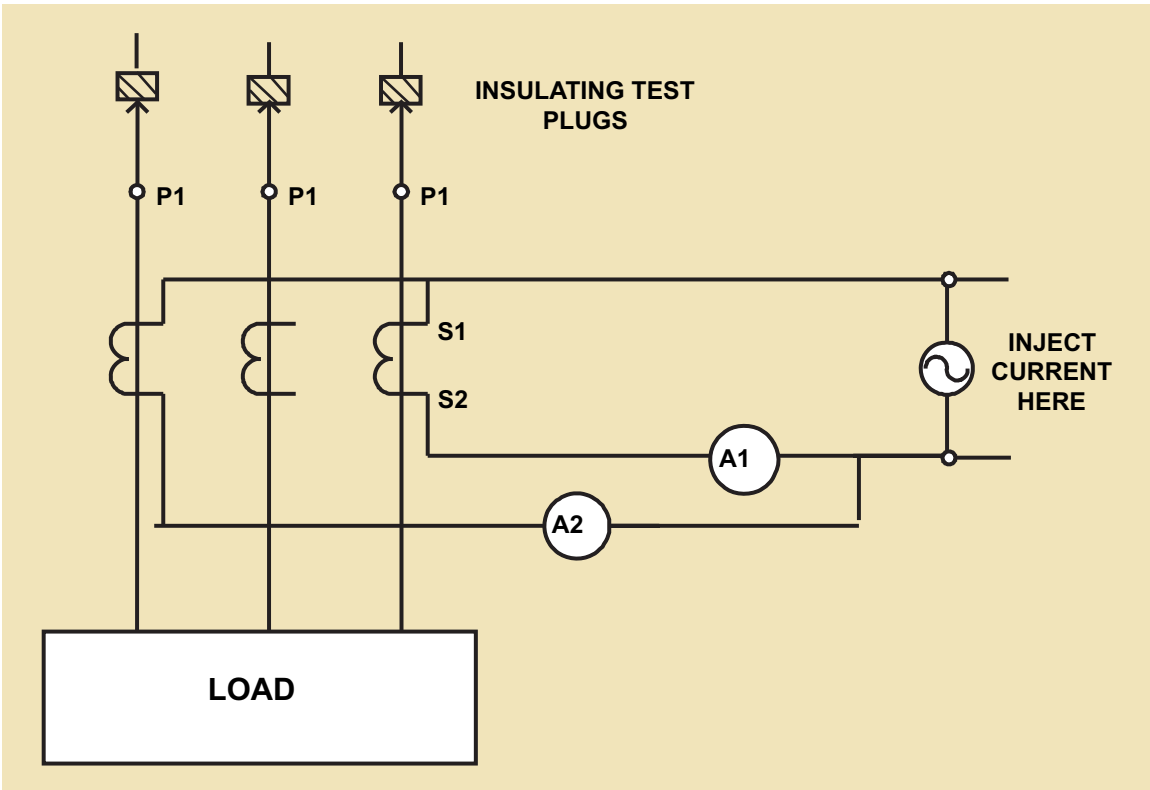

Figure - 20

6.7.3 CONTACT TIGHTNESS TEST OF BAY CONTACTS:

a. Isolate the Bay from Bus –Side and line side as shown in Fig.-21.

b. Ensure that all the secondary cores are connected or short if not in use.

c. Inject the Current at Point 1 (200A) from primary injection kit (w r t earth) and return current via earth point at 2 as shown in Fig.-21.

d. Check that we are able to inject current at point 1 and measure the current at point 2.

e. Injection of current is the indication of contact tightness.

f. Repeat the procedure for point 1 & 3

g. Repeat the procedure for point 1 & 4

Note: Above tests can be aborted if individual contact resistances are within satisfactory limit and physical phase checking is satisfactory.

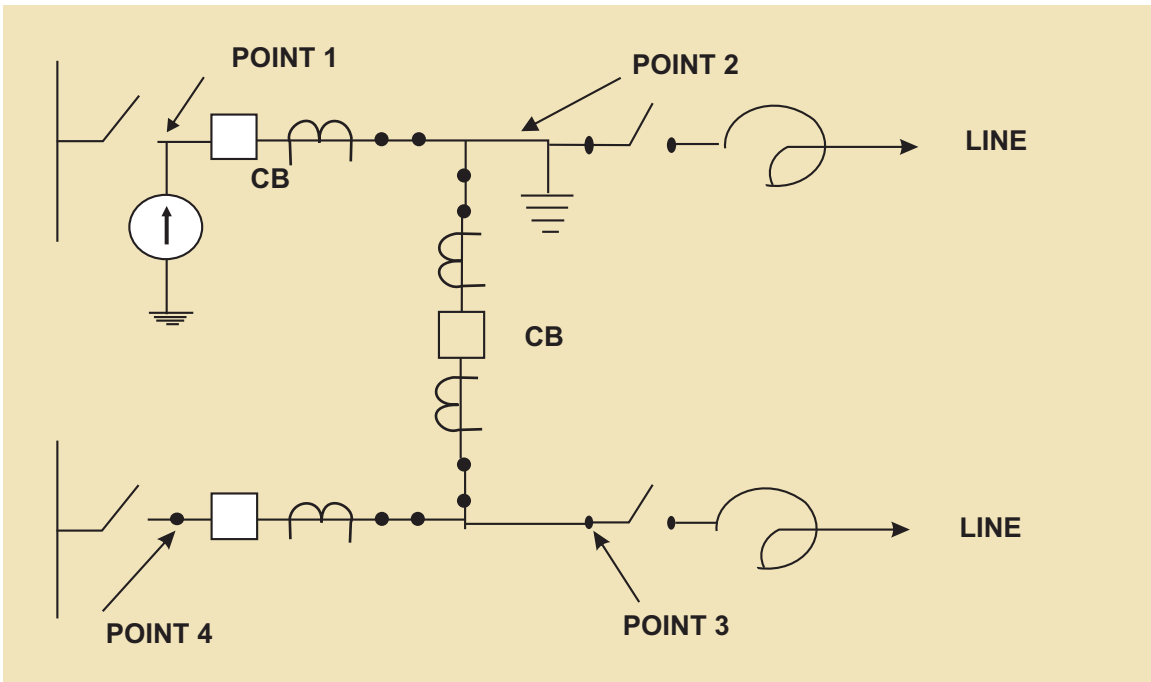

Figure-21 : Primary injection test to check contact tightness of Bay/ feeders

TECHNICAL SPECIFICATION SECTION: SWITCHGEAR-CB REVISION-11

CIRCUIT BREAKER

17.0 PRE-COMMISSIONING TESTS

17.1 An indicative list of tests is given below. All routine tests except power frequency voltage dry withstand test on main circuit breaker shall be repeated on the completely assembled breaker at site. For Pre-commissioning tests, procedures and formats for circuit breakers, POWERGRID document no. CF/CB/03/R-4 dated 01/04/2013 of document no. D-2-01-03-01-04 dated 01-04-2013 will be the reference document. This document will be available at respective sites and shall be referred by the contractor. Contractor shall perform any additional test based on specialties of the items as per the field Q.P./instructions of the equipment Supplier or Employer without any extra cost to the Employer. The Contractor

shall arrange all instruments required for conducting these tests alongwith calibration certificates and shall furnish the list of instruments to the Employer for approval.

(a) Insulation resistance of each pole.

(b) Check adjustments, if any suggested by manufacturer.

(c) Breaker closing and opening time.

(d) Slow and Power closing operation and opening.

(e) Trip free and anti pumping operation.

(f) Minimum pick-up voltage of coils.

(g) Dynamic Contact resistance measurement.

(h) Functional checking of control circuits interlocks, tripping through protective relays and auto reclose operation.

(i) Insulation resistance of control circuits, motor etc.

(j) Resistance of closing and tripping coils.

(k) SF6 gas leakage check.

(l) Dew Point Measurement

(m) Operation check of pressure switches and gas density monitor during gas filling.

(n) Checking of mechanical ‘CLOSE’ interlock, wherever applicable.

(o) Testing of grading capacitor.

(p) Resistance measurement of main circuit.

(q) Checking of operating mechanisms

(r) Check for annunciations in control room.

(s) Point of wave switching test (wherever applicable)

17.2 The contractor shall ensure that erection, testing and commissioning of circuit breaker shall be carried out under the supervision of the circuit breaker manufacturer's representative. The commissioning report shall be signed by the manufacturer’s representative.

MODEL TECHNICAL SPECIFICATION

SECTION-SWITCHGEAR-INST

(INSTRUMENT TRANSFORMERS)

(REV. NO. 11)

9.0 PRE-COMMISSIONING TESTS

9.1 An indicative list of tests is given below. Contractor shall perform any additional test based on specialties of the items as per the field Q.P./Instructions of the equipment Supplier or Employer without any extra cost to the Employer. **The Contractor shall arrange all instruments**

required for conducting these tests alongwith calibration certificates at his own cost.

9.2 **Current Transformers**

(a) Insulation Resistance Test for primary and secondary

(b) Polarity test

(c) Ratio identification test - checking of all ratios on all cores by primary injection of current

(d) Dielectric test of oil (wherever applicable)

(e) Magnetizing characteristics test

(f) Tan delta and capacitance measurement

(g) Secondary winding resistance measurement

(h) Contact resistance measurement (wherever possible/accessible)

(i) Test for SF_6 (for SF_6 filled CTs) – Dew point measurement, SF_6 alarm/ lockout check

(j) DGA test of oil

Dissolved Gas Analysis (DGA) shall be carried out twice within the first year of service, first within the first month of commissioning/charging and second between six months to one year from the date of commissioning/charging.

CTs/IVTs must have adequate provision for taking oil samples from the bottom of the CT/IVT without exposure to atmosphere. Manufacturer shall recommend the frequency at which oil samples should be taken and norms for various gases in oil after being in operation for different durations. ~~Bidder/~~Manufacturer should also indicate the total quantity of oil which can be withdrawn from CT for gas analysis before refilling or further treatment of CT becomes necessary.

Bidder shall supply 2 nos. oil sampling device for every 20 nos. oil filled CT supplied with a minimum of 2 nos. oil sampling device for each substation.

9.3 **Inductive Voltage Transformers/Capacitive Voltage Transformers**

(a) Insulation Resistance test for primary (if applicable) and secondary winding
(b) Polarity test
(c) Ratio test
(d) Dielectric test of oil (wherever applicable)

(e) Tan delta and capacitance measurement of individual capacitor stacks
(f) Secondary winding resistance measurement

For pre-commissioning procedures and formats for Current Transformers, Doc.No.: CF/CT/04/R-4 dtd-01.04.2013 and for Voltage Transformers, CF/CVT/05/R-4 dtd-01.04.2011 under POWERGRID document no. D-2-01-03-01-04 will be the reference document. **This document will be available at respective sites and shall be referred by the contractor.**

12.0 PRE-COMMISSIONING TESTS

12.1 Contractor shall perform any additional test based on specialties of the items as per the field Q.P./Instructions of the equipment manufacturer or Employer without any extra cost to the Employer. The Contractor shall arrange all instruments required for conducting these tests along with calibration certificates at his own cost.

An indicative list of tests on isolator and earth switch is given below. For pre-commissioning procedures and formats for Isolators and Grounding switch, Doc No. **CF/ISO/08/R-5** under POWERGRID standard pre-commissioning document **Doc. No. D-2-01-03-01-05** will be the reference document. This document will

be available at respective sites and shall be referred by the contractor.

(a) Insulation resistance of each pole

(b) Manual and electrical operation and interlocks

(c) Insulation resistance of control circuits and motors

(d) Ground connections

(e) Contact resistance measurement

(f) Proper alignment so as to minimize vibration during operation

(g) Resistance of operating and interlocks coils

(i) Functional check of the control schematic and electrical & mechanical interlocks

(j) 50 operations test on isolator and earth switch

12. 2 The Contractor shall ensure that erection, testing and commissioning of Isolators above 72.5 kV class shall be carried out under the supervision of the Isolator manufacturer's representative and the cost of the same shall be included in the erection price of the respective equipment.

8. PRE-COMMISSIONING TESTS

8.1. An indicative list of tests is given below:

a. Operation check of LA counters.

b. Insulation resistance measurement

c. Capacitance and Tan delta measurement of individual stacks.

d. Third harmonic resistive current measurement (to be conducted after energisation.)

8.2. Contractor shall perform any additional test based on specialties of the items as per the field Q.P./Instructions of the equipment manufacturer or Employer without any extra cost to the Employer. The Contractor shall arrange all instruments required for conducting these tests along with calibration certificates at his own cost.

8.3. For pre-commissioning procedures and formats for Surge Arresters, Doc.No.: CF/SA/08/R-4 dtd-01/04/2013 under POWERGRID Document no. D-2-01-03-01-04 will be reference document. This document will be available at respective sites and shall be referred by the contractor.