REQUEST FOR QUOTATION

MMI:PU:RF:003

BHARAT HEAVY ELECTRICALS LIMITED
Electronics Division
PB No. 2606, Mysore Road Bangalore - 560026
INDIA

RFQ NUMBER:
SAMRC25007

RFQ DATE :
27.01.2025

Due Date/Day: 17.02.2025 MON
Time : 13:00 HRS
Tender Box : Reception Area
Opening Venue:
SUB ASSLY PUR

(address for communication) :

(for all correspondence)
Purchase Executive : Sarita
Phone : 080 26998239
Fax :
E-mail: sarita@bhel.in

Sl No.	Description	Qty	Unit	Delivery qty	Delivery Date
1	DV0688171400 CAP MTL POLYPROP 1200MF 10% 700V * HSN/SAC : 8532 Mfr Part No.- LNK-P7X-1200-70 Vendor - ICAR SPA Mfr Part No.- E57.A40-125010 Vendor - ELECTRONICON KONDENSATOREN GMBH Mfr Part No.- LNK 800/1.2/7I/A Vendor - VISHAY COMPONENTS INDIA PVT. LTD. CAP MTL POLYPROP 1200MF +/- 10% 700V	4,050	NO	4,050	20.06.2025

Total Number of Items - 1

1.
2.

TWO PART BID - SUBMIT TECHNICAL AND PRICE BID IN SEPARATE SEALED COVERS

NOTES:
1. This RFQ is governed by:
a) INSTRUCTIONS TO BIDDERS/SELLERS and GENERAL CONDITIONS OF CONTRACT FOR PURCHASE available at **http://edn.bhel.com (RFQ-PO Terms & Conditions)**
b) Any other specific Terms and Conditions mentioned.
2. Bidders / Representatives who would like to be present during opening of offers are required to furnish authorization letter for the same.
* The HSN/SAC no mentioned against the line items in the RFQ are indicative only.

For and On behalf of BHEL.

Sarita
Sub-Assembly

EDN BANGALORE	PURCHASE SPECIFICATION FOR CAPACITOR POLYPROPYLENE 1200µF 10% 700V	PS4062399 REV NO 00 PAGE 00 OF 05

SPECIFICATION FOR CAPACITOR 1200µF 10% 700V

REVISION HISTORY SHEET

REV. NO	DATE	NATURE OF CHANGE	REASONS	PREPARED BY	APPROVED BY
00	14.10.2023	FIRST ISSUE		HARI KALLURU	T J GIRISH

COPY RIGHT AND CONFIDENTIAL
The information on this document is the property of Bharat Heavy Electricals Limited.
It must not be used directly or indirectly in anyway detrimental to the interest of the company.

Approved: T J Girish		
Prepared: Hari Kalluru	Issued: SAE/406	Date: 14/10/2023

File No. EDN-SA0SAMP(PFE)/42/2025-EDN-SA/MM/PUR (Computer No. 139161)
Generated from eOffice by Sarita Mohapatra, MANAGER(SM)-SA/MM/PUR-EDN, MANAGER(Electrical), BHARAT HEAVY ELECTRICAL LTD on 07/02/2025 08:18 am

COPY RIGHT AND CONFIDENTIAL
The information on this document is the property of Bharat Heavy Electricals Limited.
It must not be used directly or indirectly in anyway detrimental to the interest of the company.

Introduction: These capacitors are used as DC link capacitor in IGBT based 130kVA auxiliary Inverter module for traction application. Following are general specification of capacitor used in power converter.

Description: CAPACITOR POLYPROPYLENE 1200µF 10% 700V

1. Detailed Specification

1.1	Rated Capacitance	: 1200µF, ± 10%
1.2	Rated D.C. voltage (*U*N)	: ≥700 V DC
1.3	Ripple voltage (Ur)	: ≥ 100V
1.4	Non-recurrent surge voltage (Us)	: ≥ 1400V
1.5	Voltage test between terminals UBB	: ≥ 1050 V DC/10s
1.6	Maximum rms current	: ≥ 165A
1.7	Maximum peak current	: ≥ 3 kA
1.8	Maximum surge current	: ≥ 15kA
1.9	Self-Inductance	: ≤ 30nH
1.10	Series resistance	: ≤ 0.3mΩ
1.11	Tangent of the loss angle of dielectric	: $2x10^{-4}$
1.12	Maximum operating temperature	: + 85°C
1.13	Lowest operating temperature	: - 25°C
1.14	Endurance type test temperature	: 70 °C
1.15	Cooling	: Natural Convection
1.16	Thermal resistance with natural cooling	: ≤ 4.1 (°C/W)

Construction

1.17	Dielectric	: DC - metallized polypropylene capacitor, self-healing
1.18	Casing	: Plastic case RAL5012 (V0 acc to UL94)
1.19	Filler / impregnant	: dry type , Self extinguishing resin moulded
1.20	Dimensions (Lx WxH)	: 165 x 75 x 170 mm (Refer drawing)
1.21	Approx. weight	: 3.0 kg

2. Standards

IEC61881-1	Rolling stock equipment – capacitors for power electronics
IEC61071	Capacitors for power electronics
IEC61373	Shock and vibration test
EN50125-1	Environmental conditions
IEC61376	Creepage and clearance

COPY RIGHT AND CONFIDENTIAL
The information on this document is the property of Bharat Heavy Electricals Limited.
It must not be used directly or indirectly in anyway detrimental to the interest of the company.

3. Reliability, availability, maintainability and safety

Operating hours	8640 hours/year
Typical load	continuous operation
Statistical lifetime	> 100000 hr
Failure rate	< 200 FIT
Safety	The risk of explosion due to over voltage, ageing, loss or other reasons should be minimized

4. Climatic & Environmental Condition:

Temperature	Max. temperature: Locomotive standing dead under sun 75 °C, Working loco 65ºC Minimum temperature: 0°C Average temperature: 47°C
Solar radiation	1 kW/m^2
Humidity	Upto 100% during rainy season
Altitude	Upto 1200 m above mean Sea level
Rainfall	Very heavy in certain areas
Atmosphere during hot weather	Extremely dusty and desert terrain in certain areas. The dust concentration in air may reach a high value of 1.6mg/cubic meter
Coastal area	The equipment shall be designed to work in coastal area in humidity and salt laden and corrosive atmosphere. The maximum values of the condition shall be as follows: Maximum pH value: 8.5 Sulphate: 7 mg per litre Max. Concentration of chlorine: 6 mg per litre Maximum conductivity: 130 micro Siemens/cm
Electromagnetic pollution	High degree of electromagnetic pollution is anticipated in locomotive machine room, where the equipment shall be mounted. Necessary precaution shall be taken in this regard.

File No. EDN-SA0SAMP(PFE)/42/2025-EDN-SA/MM/PUR (Computer No. 139161)
Generated from eOffice by Sarita Mohapatra, MANAGER(SM)-SA/MM/PUR-EDN, MANAGER(Electrical), BHARAT HEAVY ELECTRICAL LTD on 07/02/2025 08:18 am

	PURCHASE SPECIFICATION FOR CAPACITOR POLYPROPYLENE 1200µF 10% 700V	PS4062399 REV NO 00 PAGE 03 OF 05

COPY RIGHT AND CONFIDENTIAL
The information on this document is the property of Bharat Heavy Electricals Limited.
It must not be used directly or indirectly in anyway detrimental to the interest of the company.

5. Dimensional details:

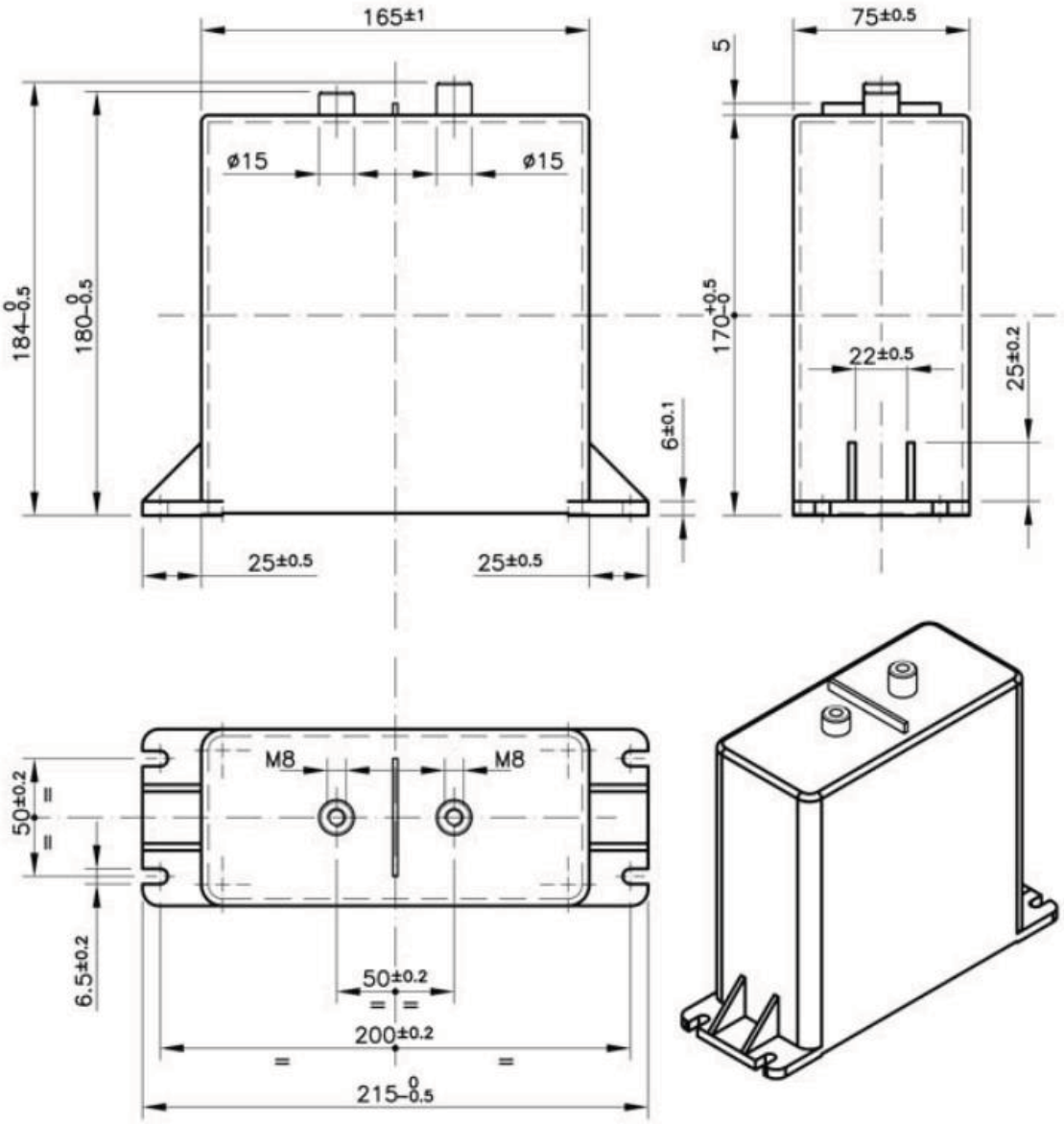

Terminals: M8X10, Maximum Tightening torque: 12Nm

All dimensions are in mm. Wherever tolerance is not specified, it may be taken as +/- 1 mm.

Compliance to these dimensional requirement and terminations are mandatory. No deviations are allowed on these dimensions.

COPY RIGHT AND CONFIDENTIAL
The information on this document is the property of Bharat Heavy Electricals Limited.
It must not be used directly or indirectly in anyway detrimental to the interest of the company.

6. Tests

List of tests to be performed on prototype as per IEC 61881 are as follows.

6.1 Routine tests

Routine tests shall be carried out by the manufacturer on every capacitor before delivery and routine test certificate shall be submitted.

6.2 Type tests

Supplier to perform type tests for the first time on capacitor. The type tested capacitor should not be supplied**.**

Supplier shall submit test protocol for Routine & type tests along with techno commercial offer.

S.NO	Test	Type / Routine test
1	Visual inspection & Dimensional check	Type/Routine
2	Measurement of capacitance and tangent of the loss angle (tan δ)	Type/Routine
3	Voltage test Between terminals Between terminal and case	Type/Routine
4	Surge discharge test	Type
5	Thermal stability test	Type
6	Self-Healing Test	Type
7	Resonance Frequency Measurement	Type
8	Environmental Testing Change of Temperature Damp Heat, Steady State	Type
9	Endurance Test	Type
10	Mechanical tests Torque resistance of terminals Vibration and shocks as per IEC61373	Type

7.Rating plate

The following information shall be given on the rating plate of each capacitor unit:

1. Manufacturer
2. Identification number and manufacturing date
3. Capacitance (µF)
4. Tolerance (%)
5. *U*NDC or *U*N (volts)
6. θ min (°C)
7. θmax (°C)
8. Maximum tightening torque = Nm

File No. EDN-SA0SAMP(PFE)/42/2025-EDN-SA/MM/PUR (Computer No. 139161)
Generated from eOffice by Sarita Mohapatra, MANAGER(SM)-SA/MM/PUR-EDN, MANAGER(Electrical), BHARAT HEAVY ELECTRICAL LTD on 07/02/2025 08:18 am

COPY RIGHT AND CONFIDENTIAL
The information on this document is the property of Bharat Heavy Electricals Limited.
It must not be used directly or indirectly in anyway detrimental to the interest of the company.

8. DOCUMENTATION

8.1 Information required along with techno commercial offer without which offer is liable for Rejection.

8.1.1 Supplier shall furnish clause wise confirmation/comments to the technical specification. Deviation, if any, shall be clearly brought out indicating the clause number, original specification, deviation sought with proper technical backup (catalogue, technical brochure, international standards, calculations etc. If no deviations required, then supplier shall furnish certificate indicating "NO DEVIATIONS REQUESTED" and we comply fully with all the technical requirements of this specification.

8.1.2 Dimensional drawing confirming to clause no. 5 of this specification.

8.2 Information required after receipt of the PO

8.2.1 Dimensional drawing for approval of BHEL along with terminal details etc.

8.2.2 Supplier to submit the successful type tested report. Supplier to start manufacturing of RFQ quantity after receipt of manufacturing clearance from BHEL based on successful type tested report.

8.3 Information required along with material supply

8.3.1 Type tested reports (for first capacitor) for the tests as per clause 6.

8.3.2 Routine Test certificates for the tests as per clause 6 on all capacitor.

9.Packing:

Equipment shall be packed in a manner suitable for delivery and storage at the appointed delivery address. Transport packaging will provide adequate protection against accidental damage during normal handling. Terminals, leads, mounting brackets etc. will be protected from mechanical damage.

10. Acceptance criteria:

Dimensional report as per approved drawing

Routine / type test report

--END--

File No. EDN-SA0SAMP(PFE)/42/2025-EDN-SA/MM/PUR (Computer No. 139161)
Generated from eOffice by Sarita Mohapatra, MANAGER(SM)-SA/MM/PUR-EDN, MANAGER(Electrical), BHARAT HEAVY ELECTRICAL LTD on 07/02/2025 08:18 am

	PRE-QUALIFICATION CRITERIA (PQC)	
A	**General**	COMPLIED
	1. The bidder shall be an Original Equipment Manufacturer (OEM) or authorized by the OEM (to be supported with valid authorization from OEM for supplies to Indian region)	Yes / No
	2. The OEM shall be a Capacitor manufacturer for industrial application.	Yes / No
	3. Offer shall be for new Capacitor only and not for any used or refurbished material	Yes / No
	4. Vendors who are already developed and evaluated for regular supply of these **Capacitor 1200µF 700V** to BHEL for usage in Traction IGBT power modules shall quote for the same item as per their approved part numbers.	Yes / No / NA
	5a. Vendors whose samples are under trial and pending approval from BHEL shall not be eligible for this tender.	Yes / No / NA
	5b. New vendor (with no prior supply history of this material to BHEL-EDN) shall not be eligible for this tender. They will be considered for development order as per the details below.	Yes / No / NA
B	**Criteria for placing Development Order on new Vendors** New vendors shall be considered for separate development orders for technical evaluation and subsequent field trials which is independent of this tender, provided the material is offered at a competitive price. They shall supply Capacitor as per BHEL purchase specification PS4062399 rev 00.	Yes / No / NA

COPY RIGHT AND CONFIDENTIAL
The information on this document is the property of Bharat Heavy Electricals Limited.
It must not be used directly or indirectly in anyway detrimental to the interest of the company.

APPROVED BY: SUDHA IYENGAR		
PREPARED BY GIRISH T J	ISSUED BY SAE/406	DATE 17.10.2023

File No. EDN-SAOSAMP(PFE)/42/2025-EDN-SA/MM/PUR (Computer No. 139161)
Generated from eOffice by Sarita Mohapatra, MANAGER(SM)-SA/MM/PUR-EDN, MANAGER(Electrical), BHARAT HEAVY ELECTRICAL LTD on 07/02/2025 08:19 am

Additional terms and conditions Rev01

1. This RFQ is for entering into Rate contract (RC) with BHEL for the tendered item. Validity of the RC will be 12 months from the award of rate contract (LOI). Firm orders will be placed during the tenure of rate contract. Prices will remain firm till the validity of RC or till the completion of supplies against the purchase orders placed against this rate contract whichever later. May please note that these quantities are projections based on the current business scenario and expected orders from customers. In the eventuality of business not coming through, BHEL is not obligated to exhaust the ordering of RC quantities.

2. Quantity indicated in the RFQ is tentative based on BHEL' S projected requirement over the next one year. Purchase orders shall be placed as and when actual requirements arise during the tenure of this rate contract.

3. BHEL reserves the right of postponement, rescheduling or staggering of delivery based on the BHEL delivery Schedule.

4. Rates and other terms and conditions agreed upon shall remain firm till the completion of tenure of rate contract or till completion of supplies against purchase orders placed under rate contract, whichever is later.

5. PO shall be placed from time to time depending on actual requirement of BHEL during the tenure of the contract

6. Validity of the offer shall be for 90 days for issue of LOI.

7. In the event of not accepting for Rate contract terms, your offer will be liable for rejection.

8. If any conditions not acceptable shall be mentioned exclusively. Otherwise it will be treated as all conditions are acceptable to the bidder.

Annexure-I

Additional terms for Order Splitting

Order Splitting: BHEL reserve the right to Split the rate contract quantity in the ratio of 70:30 to L1, and L2 Bidders respectively subjected to L2 Bidder accept to supply as per L1 negotiated price. In case, L2 Bidder does not accept to supply as per L1 negotiated price, the counter offer will be extended to subsequent Bidder's i.e. L3, L4, L5…. In case no subsequent Bidder accept to supply at L1 price, balance quantity will be ordered on L1 only. The decision of BHEL shall be final on this matter.

In case of single qualified bidder 100% quantity will be order on L1.

RFQ TERMS & CONDITIONS

Following points are to be noted before submitting your offer.

1- **Important Notice**: Request you to go through terms and conditions before submitting quote.

a) INSTRUCTIONS TO BIDDERS/SELLERS (**Doc No :BHEL:EDN:ITB-SHOP: Rev 03**) available at **http://edn.bhel.com** (RFQ-PO Terms & Conditions).

b) GENERAL CONDITIONS OF CONTRACT FOR PURCHASE (**Doc no: BHEL: EDN: GCC-SHOP: Rev 01**) available at **http://edn.bhel.com** (RFQ-PO Terms & Conditions).

c) Any other specific Terms and Conditions mentioned.

d) **FOR THIS PROCUREMENT, PUBLIC PROCUREMENT (PREFERENCE TO MAKE IN INDIA)**, Order 2017 dated 15.06.2017, 28.05.2018 and revision dated 16th September 2020 and subsequent Orders issued by the respective Nodal Ministry shall be applicable even if issued after issue of this NIT but before finalization of contract/PO against this NIT.

In the event of any Nodal Ministry prescribing higher or lower percentage of purchase preference and/or local content in respect of this procurement, same shall be applicable. ***https://dipp.gov.in/public-procurements***

e) **FOR THIS PROCUREMENT (GFR),** Restrictions under Rule 144(xi) of the General Financial Rules (GFRs), 2017- Dept. of Expenditure OM No.6/18/2019-PPD dated 23rd July, 2020 and subsequent Orders issued by the respective Nodal Ministry shall be applicable even if issued after issue of this NIT but before finalization of contract/PO against this NIT.
https://www.mea.gov.in/

f) **PURCHASE PREFERENCE FOR MSE VENDORS:**
MSE vendors quoting within a price band of L1 + 15% shall be allowed to supply up to 25% of the requirement against this tender provided: -

(i) The MSE vendor matches the L1 price.

(ii) L1 price is from a non MSE vendor.

(iii) L1 price will be offered to the vendor nearest to L1 in terms of price ranking (L2 – nearest to L1). In case of non-acceptance by the MSE vendor (L2), next ranking MSE vendor will be offered who is within the L1 + 15% band (if L3 is also within 15% band).

(iv) 3% of the 25% will be earmarked for women owned MSEs.

(v) 25% of the 25% (i.e., 6.25% of the total enquired quantity) will be earmarked for SC/ST owned MSE firms provided conditions as mentioned in (i) & (ii) are fulfilled.

(vi) In case where no SC/ST category firms are meeting the conditions mentioned in (i) and (ii) or have not participated in the tender, the 6.25% of earmarked quantity for SC/ST owned MSE firms will be distributed among the other eligible MSE vendors who have participated in the tender.

(vii) In case after the bid opening it is seen that no MSE has become L1, then depending on the nature of the item, if it is not possible to split the tendered items/quantities on account of reasons like customer contract requirements of supplying one make for a given project or technical reasons like the tendered item being a system etc., then BHEL would not counter offer the L1 prices even though there may be MSE bidders within the +15% band of L1. Such information that tendered quantity will not be split shall be indicated in the RFQ.

2- Bidders should mention GSTN number of the place of supply and HSN (Harmonized System of Nomenclature)/SAC (Services Accounting Code) number in the offer. In case both supply and service are involved, GSTN no of the place of supply for services shall also be mentioned separately in the offer if different.

3- This is TWO PART BID tender. BIDDERS are requested to send "Techno Commercial Bid" AND "Price BID" separately. For more details, please refer point 2.b in attached RFQ Terms and conditions document.

4- Penalty for delayed delivery is applicable for this Enquiry. If it is not mentioned explicitly it will be assumed as acceptance.

5- Offers with ADVANCE PAYMENT are liable for rejection.

6- If only "Sight Draft" is mentioned it will be considered as "Sight Draft with 45 days".

7- In case of not interested in submitting quotation, please send the regret letter which is essential for our records.

8- Please indicate complete part number in your quotation and make, else your quotation might be rejected.

9- ***Please quote for our RFQ quantity and for MOQ (if any). Offers with high MOQ may not be accepted.***

10- Material has to be supplied in manufacturer's pack in sealed condition (Refurbished/ pulled out parts are not accepted).

11- The evaluation currency for this RFQ shall be INR.

12- Documents Required from Foreign Bidders: -

I - Documents needed for consignments to be picked

1. Airfreight request format.
2. Invoice
3. Packing list
4. PO copy

II - Documents to be submitted to SBI & Soft copy of the same to be shared to concerned purchase officer,

1. Covering letter
2. Invoice
3. Packing list
4. AWB

III - Tax compliance documents – Every Financial Year.

1. Form 10F – shall be furnished electronically and shall be verified in the manner prescribed under sub-rule (1) of Rule 131
2. No PE/BC
3. Tax Residency Certificate (TRC)

13- **Conflict of Interest**:- "A bidder shall not have conflict of interest with other bidders. Such conflict of interest can lead to anti-competitive practices to the detriment of Procuring Entity's interests. The bidder found to have a conflict of interest shall be disqualified. A bidder may be considered to have a conflict of interest with one or more parties in this bidding process, if:

a) they have controlling partner (s) in common; or
b) they receive or have received any direct or indirect subsidy/ financial stake from any of them; or
c) they have the same legal representative/agent for purposes of this bid; or
d) they have relationship with each other, directly or through common third parties, that puts them in a position to have access to information about or influence on the bid of another Bidder, or
e) Bidder participates in more than one bid in this bidding process. Participation by a Bidder in more than one Bid will result in the disqualification of all bids in which the parties are involved. However, this does not limit the inclusion of the components/ sub-assembly/ Assemblies from. one bidding manufacturer in more than one bid; or
f) In cases of agents quoting in offshore procurements, on behalf of their principal manufacturers, one agent cannot represent two manufacturers or quote on their behalf in a particular tender enquiry. One manufacturer can also authorise only one agent/dealer.

There can be only one bid from the following:

(i) The principal manufacturer directly or through one Indian agent on his behalf; and
(ii) Indian/foreign agent on behalf of only one principal, or

g) A Bidder or any of its affiliates participated as a consultant in the preparation of the design or technical specifications of the contract that is the subject of the Bid, or

h) In case of a holding company having more than one independently manufacturing units, or more than one unit having common business ownership/management, only one unit should quote. Similar restrictions would apply to closely related sister companies. Bidders must proactively declare such sister/ common business/ management units in same/ similar line of business. "

14. Force Majeure:

14.1. "Force Majeure" shall mean circumstance which is:

a) beyond control of either of the parties to contract,

b) either of the parties could not reasonably have provided against the event before entering into the contract,

c) having arisen, either of the parties could not reasonably have avoided or overcome, and

d) is not substantially attributable to either of the parties And

Prevents the performance of the contract,

Such circumstances include but shall not be limited to:

i) War, hostilities, invasion, act of foreign enemies.

ii) Rebellion, terrorism, revolution, insurrection, military or usurped power, or civil war.

iii) Riot, commotion or disorder by persons other than the contractor's personnel and other employees of the contractor and sub-contractors.

iv) Strike or lockout not solely involving the contractor's personnel and other employees of the contractor and sub-contractors.

v) Encountering munitions of war, explosive materials, ionizing radiation or contamination by radio-activity, except as may be attributable to the contractor's use of such munitions, explosives, radiation or radio- activity.

vi) Natural catastrophes such as earthquake, tsunami, volcanic activity, hurricane or typhoon, flood, fire, cyclones etc.

vii) Epidemic, pandemic etc.

14.2. The following events are explicitly excluded from Force Majeure and are solely the responsibilities of the non-performing party: a) any strike, work-to-rule action, go slow or similar labour difficulty (b) late delivery of equipment or material (unless caused by Force Majeure event) and (c) economic hardship.

14.3. If either party is prevented, hindered or delayed from or in performing any of its obligations under the Contract by an event of Force Majeure, then it shall notify the other in writing of the occurrence of such event and the circumstances thereof within 15 (fifteen) days after the occurrence of such event.

14.4. The party who has given such notice shall be excused from the performance or punctual performance of its obligations under the Contract for so long as the relevant event of Force Majeure continues and to the extent that such party's performance is prevented, hindered or delayed. The Time for Completion shall be extended by a period of time equal to period of delay caused due to such Force Majeure event.

14.5. Delay or non-performance by either party hereto caused by the occurrence of any event of Force Majeure shall not

i) Constitute a default or breach of the Contract.

ii) Give rise to any claim for damages or additional cost expense occasioned thereby, if and to the extent that such delay or non-performance is caused by the occurrence of an event of Force Majeure.

14.6. BHEL at its discretion may consider short closure of contract after 1 year of imposition of Force Majeure in line with extant guidelines. In any case, Supplier/Vendor cannot consider deemed short-closure after 1 year of imposition of Force Majeure.

15. SETTLEMENT OF DISPUTE:

If any dispute or difference of any kind whatsoever shall arise between BHEL and the Supplier/Vendor, arising out of the contract for the performance of the work whether during the progress of contract termination, abandonment or breach of the contract, it shall in the first place referred to Designated Engineer for amicable resolution by the parties. Designated Engineer (to be nominated by BHEL for settlement of disputes arising out of the contract) who within 60 days after

being requested shall give written notice of his decision to the contractor. Save as hereinafter provided, such decision in respect of every matter so referred shall forthwith be given effect to by the Supplier/Vendor who shall proceed with the work with all due diligence, whether he or BHEL desires to resolve the dispute as hereinafter provided or not.

If after the Designated Engineer has given written notice of this decision to the party and no intention to pursue the dispute has been communicated to him by the affected party within 30 days from the receipt of such notice, the said decision shall become final and binding on the parties. In the event the Supplier/Vendor being dissatisfied with any such decision or if amicable settlement cannot be reached then all such disputed issues shall be resolved through conciliation in terms of the BHEL Conciliation Scheme 2018 as per Clause 15.1.

15.1. CONCILIATION:

Any dispute, difference or controversy of whatever nature howsoever arising under or out of or in relation to this Agreement (including its interpretation) between the Parties, and so notified in writing by either Party to the other Party (the "Dispute") shall, in the first instance, be attempted to be resolved amicably in accordance with the conciliation procedure as per BHEL Conciliation Scheme 2018. The proceedings of Conciliation shall broadly be governed by Part-III of the Arbitration and Conciliation Act 1996 or any statutory modification thereof and as provided in - "Procedure for conduct of conciliation proceedings" (as available in www.bhel.com)).

Note:

Ministry of Finance has issued OM reference No. 1/2/24 dated 03.06.2024 regarding "Guidelines for Arbitration and Mediation in Contracts of Domestic Public Procurement. In the said OM it has been recommended that Government departments/Entities/ agencies are to encourage mediation under the Mediation Act. 2023. The said Act has not yet been notified by the Government. Therefore, the clause "Settlement of Disputes" shall be modified accordingly as and when the Mediation Act 2023 gets notified.

15.2. ARBITRATION:

15.2.1.

Except as provided elsewhere in this Contract, in case Parties are unable to reach amicable settlement (whether by Conciliation to be conducted as provided in Clause 15.1 herein above or otherwise) in respect of any dispute or difference; arising out of the formation, breach, termination, validity or execution of the Contract; or, the respective rights and liabilities of the Parties; or, in relation to interpretation of any provision of the Contract; or. in any manner touching upon the Contract (hereinafter referred to as the 'Dispute'), then, either Party may, refer the disputes to Arbitral Institution **"Arbitration & Conciliation Centre, Bengaluru (Domestic & International)"** and such dispute to be adjudicated by Sole Arbitrator appointed in accordance with the **Arbitration Centre - Karnataka (Domestic and International) Rules, 2012.**

15.2.2.

A party willing to commence arbitration proceeding shall invoke Arbitration Clause by giving notice to the other party in terms of section 21 of the Arbitration & Conciliation Act, 1996 (hereinafter referred to as the 'Notice') before referring the matter to arbitral institution. The Notice shall be addressed to the Head of the Region, Power Sector/ Unit, BHEL, executing the Contract and shall contain the particulars of all claims to be referred to arbitration with sufficient detail and shall also indicate the monetary amount of such claim including interest, if any.

15.2.3.

After expiry of 30 days from the date of receipt of aforesaid notice, the party invoking the Arbitration shall submit that dispute to the **"Arbitration & Conciliation Centre, Bengaluru (Domestic & International)"** and that dispute shall be adjudicated in accordance with their respective Arbitration Rules **Arbitration Centre - Karnataka (Domestic and International) Rules, 2012.** The matter shall be adjudicated by a Sole Arbitrator who shall necessarily be a Retd. Judge having considerable experience in commercial matters to be appointed/nominated by the respective institution. The cost/expenses pertaining to the said Arbitration shall also be governed in accordance with the Rules of the respective Arbitral Institution. The decision of the party invoking the Arbitration for reference of dispute to a specific Arbitral institution for adjudication of that dispute shall be final and binding on both the parties and shall not be subject to any change thereafter. The institution once selected at the time of invocation of dispute shall remain unchanged.

15.2.4.

The fee and expenses shall be borne by the parties as per the Arbitral Institutional rules.

15.2.5.

The Arbitration proceedings shall be in English language and the seat and venue of Arbitration shall be in Bengaluru, Karnataka only.

15.2.6.

Subject to the above, the provisions of Arbitration & Conciliation Act 1996 and any amendment thereof shall be applicable. All matters relating to this Contract and arising out of invocation of Arbitration clause are subject to the exclusive jurisdiction of the Court(s) situated at Bengaluru, Karnataka only.

15.2.7.

Notwithstanding any reference to the Designated Engineer or Conciliation or Arbitration herein, a. the parties shall continue to perform their respective obligations under the Contract unless they otherwise agree. Settlement of Dispute clause cannot be invoked by the Contractor, if the Contract has been mutually closed or 'No Demand Certificate' has been furnished by the Contractor or any Settlement Agreement has been signed between the Employer and the Contractor.

15.2.8.

It is agreed that Mechanism of resolution of disputes through arbitration shall be available only in the cases where the value of the dispute is less than Rs. 10 Crores.

15.2.9.

In case the disputed amount Claim, Counter claim including interest is Rs. 10 crores and above, the parties shall be within their rights to take recourse to remedies other than Arbitration, as may be available to them under the applicable laws after prior intimation to the other party. Subject to the aforesaid conditions, provisions of the Arbitration and Conciliation Act, 1996 and any statutory modifications or re-enactment thereof as amended from time to time, shall apply to the arbitration proceedings under this clause.

15.2.10.

In case, multiple arbitrations are invoked (whether sub-judice or arbitral award passed) by any party to under this contract, then the cumulative value of claims (including interest claimed or awarded) in all such arbitrations shall be taken in account while arriving at the total claim in dispute for the subject contract for the purpose of clause 15.2.9. Disputes having cumulative value of less than 10 crores shall be resolved through arbitration and any additional dispute shall be adjudicated by the court of competent jurisdiction.

15.2.11.

In case of Contract with Public Sector Enterprise (PSE) or a Government Department, the following shall be applicable:

In the event of any dispute or difference relating to the interpretation and application of the provisions of commercial contract(s) between Central Public Sector Enterprises (CPSEs)/ Port Trusts inter se and also between CPSEs and Government Departments/Organizations (excluding disputes concerning Railways, Income Tax, Customs & Excise Departments), such dispute or difference shall be taken up by either party for resolution through AMRCD (Administrative Mechanism for Resolution of CPSEs Disputes) as mentioned in DPE OM No. 05/0003/2019-FTS-10937 dated 14-12-2022 as amended from time to time.

16. JURISDICTION:

This contract shall be governed by the Law for the time being in force in the Republic of India.
Indian laws both substantive and procedural, for the time being in force, including modifications thereto, shall govern the Contract. In case of any suit or other legal proceedings arising under or relating to this Contract, the courts at Bengaluru, Karnataka only shall have the Jurisdiction.

17. BREACH OF CONTRACT, REMEDIES AND TERMINATION:

17.1. BREACH OF CONTRACT:

The following shall amount to breach of contract:

i. Non-supply of material/ non-completion of work by the Supplier/Vendor within scheduled delivery/ completion period as per contract or as extended from time to time.

ii. The Supplier/Vendor fails to perform as per the activity schedule and there are sufficient reasons even before expiry of the delivery/ completion period to justify that supplies shall be inordinately delayed beyond contractual delivery/ completion period.

iii. The Supplier/Vendor delivers equipment/ material not of the contracted quality.

iv. The Supplier/Vendor fails to replace the defective equipment/ material/ component as per guarantee clause.

v. Withdrawal from or abandonment of the work by the Supplier/Vendor before completion as per contract.

vi. Assignment, transfer, subletting of Contract by the Supplier/Vendor without BHEL's written permission resulting in termination of Contract or part thereof by BHEL.

vii. Non-compliance to any contractual condition or any other default attributable to Supplier/Vendor.

viii. Any other reason(s) attributable to Vendor towards failure of performance of contract. In case of breach of contract, BHEL shall have the right to terminate the Purchase Order/ Contract either in whole or in part thereof without any compensation to the Supplier/Vendor.

ix. Any of the declarations furnished by the contractor at the time of bidding and/ or entering into the contract for supply are found untruthful and such declarations were of a nature that could have resulted in non-award of contract to the contractor or could expose BHEL and/ or Owner to adverse consequences, financial or otherwise.

x. Supplier/Vendor is convicted of any offence involving corrupt business practices, antinational activities or any such offence that compromises the business ethics of BHEL, in violation of the Integrity Pact entered into with BHEL has the potential to harm the overall business of BHEL/ Owner.

Note:

Once BHEL considers that a breach of contract has occurred on the part of Supplier/Vendor, BHEL shall notify the Supplier/Vendor by way of notice in this regard. Contractor shall be given an opportunity to rectify the reasons causing the breach of contract within a period of 14 days.

In case the contractor fails to remedy the breach, as mentioned in the notice, to the satisfaction of BHEL, BHEL shall have the right to take recourse to any of the remedial actions available to it under the relevant provisions of contract.

17.2. REMEDIES IN CASE OF BREACH OF CONTRACT:

i. Wherein the period as stipulated in the notice issued under clause 17.1 has expired and Supplier/Vendor has failed to remedy the breach, BHEL will have the right to terminate the contract on the ground of "Breach of Contract" without any further notice to contractor.

ii. Upon termination of contract, BHEL shall be entitled to recover an amount equivalent to 10% of the Contract Value for the damages on account of breach of contract committed by the Supplier/Vendor. This amount shall be recovered by way of encashing the security instruments like performance bank guarantee etc. available with BHEL against the said contract. In case the value of the security instruments available is less than 10% of the contract value, the balance amount shall be recovered from other financial remedies (i.e. available bills of the Supplier/Vendor, retention amount, from the money due to the Supplier/Vendor etc. with BHEL) or the other legal remedies shall be pursued.

iii. wherever the value of security instruments like performance bank guarantee available with BHEL against the said contract is 10% of the contract value or more, such security instruments to the extent of 10% contract value will be encashed. In case no security instruments are available or the value of the security instruments available is less than 10% of the contract value, the 10% of the contract value or the balance amount, as the case may be, will be recovered in all or any of the following manners:

iv. In case the amount recovered under sub clause (a) above is not sufficient to fulfil the amount recoverable then; a demand notice to deposit the balance amount within 30 days shall be issued to Supplier/Vendor.

v. If Supplier/Vendor fails to deposit the balance amount within the period as prescribed in demand notice, following action shall be taken for recovery of the balance amount:

a. from dues available in the form of Bills payable to defaulted Supplier/Vendor against the same contract.
b. If it is not possible to recover the dues available from the same contract or dues are insufficient to meet the recoverable amount, balance amount shall be recovered from any money(s) payable to Supplier/Vendor under any contract with other Units of BHEL including recovery from security deposits or any other deposit available in the form of security instruments of any kind against Security deposit or EMD.
c. In-case recoveries are not possible with any of the above available options, Legal action shall be initiated for recovery against defaulted supplier/Vendor.

vi. It is an agreed term of contract that this amount shall be a genuine pre-estimate of damages that BHEL would incur in completion of balance contractual obligation of the contract through any other agency and BHEL will not be required to furnish any other evidence to the Supplier/Vendor for the purpose of estimation of damages.

vii. In addition to the above, imposition of liquidated damages, debarment, termination, de-scoping, short-closure, etc., shall be applied as per provisions of the contract.

Note:

The defaulting Supplier/Vendor shall not be eligible for participation in any of the future enquiries floated by BHEL to complete the balance work. The defaulting contractor shall mean and include:

(a) In case defaulted Supplier/Vendor is the Sole Proprietorship Firm, any Sole Proprietorship Firm owned by same Sole Proprietor.

(b) In case defaulted Supplier/Vendor is The Partnership Firm, any firm comprising of same partners/ some of the same partners; or sole proprietorship firm owned by any partner(s) as a sole proprietor.

18. OVER RUN CHARGES

No Overrun charges are applicable.

19. ORDER OF PRECEDENCE

The Purchase Order along with its Annexures the NIT, its amendments /corrigendum's shall all together constitute the entire contract between the Parties and shall be complementary to one another. In case of any contradiction, the order of precedence shall be as below:

a. Purchase Order along with its Annexures
b. Amendments/Clarifications/Corrigenda/Errata etc. issued in respect of the tender documents by BHEL.
c. NIT

20. OTHER POINTS

Vendor should follow the agreed tender term (Cl. no. 28.0 of NIT) strictly: -- "The offers of the bidders who are on the banned list as also the offer of the bidders, who engage the services of the banned firms, shall be rejected. The list of banned firms is available on BHEL web site www.bhel.com)".

All other terms & conditions not covered here shall be as per those specified in the tender document (NIT) along with TCNs including Technical Specification, Specific Conditions of Contract & General Conditions of Contract.

i. In case of negotiation, validity of offer shall be 60 days from receipt of revised /negotiated final price or 90 days from Part-I opening, whichever is later.
ii. Offers with shorter validity than above are liable to be rejected.

21. NO INTEREST PAYABLE TO CONTRACTOR

Notwithstanding anything to the contrary contained in any other document comprising in the Contract, no interest shall be payable by BHEL to Contractor on any moneys or balances including but not limited to the Security Deposit, EMD, Retention Money, RA Bills or the Final Bill, or any amount withheld and/or appropriated by BHEL etc., which becomes or as the case may be, is adjudged to be due from BHEL to Contractor whether under the Contract or otherwise.

22. LIQUIDATED DAMAGE

Liquidated Damages, wherever referred under this Tender/Agreement, shall mean and refer to the damages, not in the nature of penalty, which the contractor agrees to pay in the event of delay in delivery of supplies, breach of contract etc. as the case may be.

Liquidated Damages leviable upon the Supplier/Vendor is a sum which is agreed by the parties as a reasonable and genuine pre-estimate of damages which will be suffered by BHEL on account of delay/breach on the part of the Supplier/Vendor.

If the Seller/Service Provider fails to deliver any or all of the Goods/Services within the original/re-fixed delivery period(s) specified in the contract/PO, the Buyer/BHEL will be entitled to deduct/recover the Liquidated Damages for the delay, unless covered under Force Majeure conditions aforesaid, @ 0.5% of the contract value of delayed quantity per week or part of the week of delayed period as pre-estimated damages not exceeding 10% of the contract value of delayed quantity without any controversy/dispute of any sort whatsoever.

COMMERCIAL TERMS & CONDITIONS

	To be mandatory filled in *YES/No* or Not applicable *(NA)*	(YES/No/NA)	Remarks (if, any)
1	**Payment terms:** (For any deviation Loading factor will be applicable above the quoted rate)		
1.A	**For Quote in INR:** BHEL standard payment terms is 100% within 45 days credit:		
1.B	**For Quote in other than INR:** BHEL standard payment terms is 100% against sight draft with 45 days credit		
2	**Delivery Terms:**		
2.A	**For Quote in INR:**Delivery Terms: BHEL Standard delivery is BHEL DDL-EDN BANGALORE:		
2.B	**For Quote in other than INR:(Vendor to mention INCO Terms like FCA/EX-Works)**		
3	**Penalty terms for Delayed Delivery:** 10% loading factor for not accepting the penalty.		
3.1	BHEL standard Penalty Terms is accepted for delayed delivery		
4	**Offer validity: 90 Days**		
5	**Delivery lead time (In Weeks)**		
6	**GFR Certificate attached**		
7	**MII Certificate attached**		
8	**Other terms & Conditions as per NIT**		
9	**Mention the Government E-Marketplace (GeM) Seller ID (Mandatory for placing PO worth Rs. 25 Lakhs & above) Applicable for only INDIAN VENDORS**		
10	**PO Delivery:- As per Vendor Quoted Delivery or RFQ Indicated Delivery whichever is later.**		

Note-1: **MII certificate: For this tender, Non-Local supplier whose local content is less than 20% are not eligible to participate.** Certificate in the format shall be considered for Class-I local supplier whose local content is more than 50% for purchase preference. If Class-I local supplier is not L1, even then 50 % of the RFQ qty. shall be offered to him for ordering at L1 price. For details, refer Government of India Circular No. P-450212/2017-PP (BE-II) issued by ministry of Commerce and Industry, DPIIT (Public Procurement Section) dt 16.09.2020 and its subsequent revisions.

Note-2: **Reverse Auction is not applicable for this tender.**

<u>On Bidder Letter Head</u>

Date:

To,

M/s Bharat Heavy Electricals Ltd.
Electronics Division, Mysore Road,'
Bangalore – 560026

Sub: Model Clause / Certificate as per Annex-III (Tenders) of Restrictions Under Rule 144 (xi) of the General Financial Rules (GFRs) 2017, Dated 23.07.2020.

Ref: BHEL Tender / RFQ / NIT Number ……

I…… [***Write name of Authorized person***] Authorized signatory for M/s …….. [***Write Company Name***] have read the clause regarding restrictions on procurement from a bidder of a country which shares a land border with India , we certify that this bidder M/s …….……..……..[**Vendor Name & address**] is not from such a country or , if from such a country [***Tick appropriate option & cut the other one***], has been registered with the competent authority . We hereby certify that we fulfill all requirements in this regard and is eligible to be considered [***attach evidence of valid registration certificate with competent authority***].

For M/s ……

Authorized Signatory
(with company seal & Name)

<u>On Bidder Letter Head</u>

Date:

To,

M/s Bharat Heavy Electricals Ltd.
Electronics Division, Mysore Road,'
Bangalore – 560026

Sub: Model Clause / Certificate as per clause 9 (a) of Revised Public Procurement (Preference to Make in India Order, 2017 of DPIIT dated 13.06.2020.

Ref: BHEL Tender / RFQ / NIT Number ……

I……. (authorized signatory for M/s ……..) a 'Class-I Local Supplier' / 'Class-II Local Supplier' at the time of tender, bidding or solicitation hereby confirm that the item meets the Local Content requirement for 'Class-I Local Supplier' / 'Class-II Local Supplier' (Tick appropriate option & cut the other one) and the Local Content percentage is ……..

The address is as below, where the local content / value addition is made:

[Factory Address]

For M/s ……

Authorized Signatory
(with company seal & Name)

Annexure-1

INTEGRITY PACT

Between

Bharat Heavy Electricals Ltd. (BHEL), a company registered under the Companies Act 1956 and having its registered office at "BHEL House", Siri Fort, New Delhi - 110049 (India) hereinafter referred to as "The Principal", which expression unless repugnant to the context or meaning hereof shall include its successors or assigns of the ONE PART

and

_____, (description of the party along with address), hereinafter referred to as "The Bidder/ Contractor" which expression unless repugnant to the context or meaning hereof shall include its successors or assigns of the OTHER PART

Preamble

The Principal intends to award, under laid-down organizational procedures, contract/s for _____ _____ _____. The Principal values full compliance with all relevant laws of the land, rules and regulations, and the principles of economic use of resources, and of fairness and transparency in its relations with its Bidder(s)/ Contractor(s).

In order to achieve these goals, the Principal will appoint Independent External Monitor(s), who will monitor the tender process and the execution of the contract for compliance with the principles mentioned above.

Section 1- Commitments of the Principal

1.1 The Principal commits itself to take all measures necessary to prevent corruption and to observe the following principles:-

1.1.1 No employee of the Principal, personally or through family members, will in connection with the tender for, or the execution of a contract, demand, take a promise for or accept, for self or third person, any material or immaterial benefit which the person is not legally entitled to.

1.1.2 The Principal will, during the tender process treat all Bidder(s) with equity and reason. The Principal will in particular, before and during the tender process, provide to all Bidder(s) the same information and will not provide to any Bidder(s) confidential/ additional information through which the Bidder(s) could obtain an advantage in relation to the tender process or the contract execution.

1.1.3 The Principal will exclude from the process all known prejudiced persons.

1.2 If the Principal obtains information on the conduct of any of its employees which is a penal offence under the Indian Penal Code 1860 and Prevention of Corruption Act 1988 or any other statutory penal enactment, or if there be a substantive suspicion in this regard, the Principal will inform its Vigilance Office and in addition can initiate disciplinary actions:

Section 2 - Commitments of the Bidder(s)/ Contractor(s)

2.1 The Bidder(s)/ Contractor(s) commit himself to take all measures necessary to prevent corruption. He commits himself to observe the following principles during his participation in the tender process and during the contract execution.

2.1.1 The Bidder(s)/ Contractor(s) will not, directly or through any other person or firm, offer, promise or give to the Principal or to any of the Principal's employees involved in the tender process or the execution of the contract or to any third person any material, immaterial or any other benefit which he/ she is not legally entitled to, in order to obtain in exchange any advantage of any kind whatsoever during the tender process or during the execution of the contract.

2.1.2 The Bidder(s)/ Contractor(s) will not enter with other Bidder(s) into any illegal or undisclosed agreement or understanding, whether formal or informal. This applies in particular to prices, specifications, certifications, subsidiary contracts, submission or non-submission of bids or any other actions to restrict competitiveness or to introduce cartelization in the bidding process.

2.1.3 The Bidder(s)/ Contractor(s) will not commit any penal offence under the relevant Indian Penal Code (IPC) and Prevention of Corruption Act; further the Bidder(s)/ Contractor(s) will not use improperly, for purposes of competition or personal gain, or pass on to others, any information or document provided by the Principal as part of the business relationship, regarding plans, technical proposals and business details, including information contained or transmitted electronically.

2.1.4 Foreign Bidder(s)/ Contractor(s) shall disclose the name and address of agents and representatives in India and Indian Bidder(s)/ Contractor(s) to disclose their foreign principals or associates. The Bidder(s)/ Contractor(s) will, when presenting his bid, disclose any and all payments he has made, and is committed to or intends to make to agents, brokers or any other intermediaries in connection with the award of the contract.

2.2 The Bidder(s)/ Contractor(s) will not instigate third persons to commit offences outlined above or be an accessory to such offences.

2.3 The Bidder(s)/ Contractor(s) shall not approach the Courts while representing the matters to IEMs and will await their decision in the matter.

Section 3 - Disqualification from tender process and exclusion from future contracts

If the Bidder(s)/ Contractor(s), before award or during execution has committed a transgression through a violation of Section 2 above, or acts in any other manner such as to put his reliability or credibility in question, the Principal is entitled to disqualify the Bidder(s)/ Contractor(s) from the tender process or take action as per the separate "Guidelines on Banning of Business dealings with Suppliers/ Contractors", framed by the Principal.

Section 4 - Compensation for Damages

4.1 If the Principal has disqualified the Bidder from the tender process prior to the award according to Section 3, the Principal is entitled to demand and recover the damages equivalent Earnest Money Deposit/ Bid Security.

4.2 If the Principal has terminated the contract according to Section 3, or if the Principal is entitled to terminate the contract according to section 3, the Principal shall be entitled to

demand and recover from the Contractor liquidated damages equivalent to 5% of the contract value or the amount equivalent to Security Deposit/ Performance Bank Guarantee, whichever is higher.

Section 5 - Previous Transgression

5.1 The Bidder declares that no previous transgressions occurred in the last 3 years with any other company in any country conforming to the anti-corruption approach or with any other Public Sector Enterprise in India that could justify his exclusion from the tender process.

5.2 If the Bidder makes incorrect statement on this subject, he can be disqualified from the tender process or the contract, if already awarded, can be terminated for such reason.

Section 6 - Equal treatment of all Bidders/ Contractors / Sub-contractors

6.1 The Principal will enter into agreements with identical conditions as this one with all Bidders and Contractors. In case of sub-contracting, the Principal contractor shall be responsible for the adoption of IP by his sub-contractors and shall continue to remain responsible for any default by his sub-contractors.

6.2 The Principal will disqualify from the tender process all bidders who do not sign this pact or violate its provisions.

Section 7 - Criminal Charges against violating Bidders/ Contractors /Subcontractors

If the Principal obtains knowledge of conduct of a Bidder, Contractor or Subcontractor, or of an employee or a representative or an associate of a Bidder, Contractor or Subcontractor which constitutes corruption, or if the Principal has substantive suspicion in this regard, the Principal will inform the Vigilance Office.

Section 8 - Independent External Monitor(s)

8.1 The Principal appoints competent and credible Independent External Monitor for this Pact. The task of the Monitor is to review independently and objectively, whether and to what extent the parties comply with the obligations under this agreement.

8.2 The Monitor is not subject to instructions by the representatives of the parties and performs his functions neutrally and independently. He reports to the CMD, BHEL.

8.3 The Bidder(s)/ Contractor(s) accepts that the Monitor has the right to access without restriction to all contract documentation of the Principal including that provided by the Bidder(s)/ Contractor(s). The Bidder(s)/ Contractor(s) will grant the monitor, upon his request and demonstration of a valid interest, unrestricted and unconditional access to his contract documentation. The same is applicable to Sub-contractor(s). The Monitor is under contractual obligation to treat the information and documents of the Bidder(s)/ Contractor(s) / Sub-contractor(s) with confidentiality in line with Non- disclosure agreement.

8.4 The Principal will provide to the Monitor sufficient information about all meetings among the parties related to the contract provided such meetings could have an impact on the contractual relations between the Principal and the Contractor. The parties offer to the Monitor the option to participate in such meetings.

8.5 The role of IEMs is advisory, would not be legally binding and it is restricted to resolving issues raised by an intending bidder regarding any aspect of the tender which allegedly restricts competition or bias towards some bidders. At the same time, it must be understood that IEMs are not consultants to the Management. Their role is independent in nature and the advice once tendered would not be subject to review at the request of the organization.

8.6 For ensuring the desired transparency and objectivity in dealing with the complaints arising out of any tendering process, the matter should be examined by the full panel of IEMs jointly as far as possible, who would look into the records, conduct an investigation, and submit their joint recommendations to the Management.

8.7 The IEMs would examine all complaints received by them and give their recommendations/ views to CMD, BHEL, at the earliest. They may also send their report directly to the CVO and the Commission, in case of suspicion of serious irregularities requiring legal/ administrative action. IEMs will tender their advice on the complaints within 10 days as far as possible.

8.8 The CMD, BHEL shall decide the compensation to be paid to the Monitor and its terms and conditions.

8.9 IEM should examine the process integrity, they are not expected to concern themselves with fixing of responsibility of officers. Complaints alleging mala fide on the part of any officer of the organization should be looked into by the CVO of the concerned organisation.

8.10 If the Monitor has reported to the CMD, BHEL, a substantiated suspicion of an offence under relevant Indian Penal Code/ Prevention of Corruption Act, and the CMD, BHEL has not, within reasonable time, taken visible action to proceed against such offence or reported it to the Vigilance Office, the Monitor may also transmit this information directly to the Central Vigilance Commissioner, Government of India.

8.11 The number of Independent External Monitor(s) shall be decided by the CMD, BHEL.

8.12 The word `Monitor' would include both singular and plural.

Section 9 - Pact Duration

9.1 This Pact shall be operative from the date IP is signed by both the parties till the final completion of contract for successful bidder and for all other bidders 6 months after the contract has been awarded. Issues like warranty / guarantee etc. should be outside the purview of IEMs.

9.2 If any claim is made/ lodged during currency of IP, the same shall be binding and continue to be valid despite the lapse of this pact as specified above, unless it is discharged/ determined by the CMD, BHEL.

Section 10 - Other Provisions

10.1 This agreement is subject to Indian Laws and jurisdiction shall be registered office of the Principal, i.e. New Delhi.

10.2 Changes and supplements as well as termination notices need to be made in writing. Side agreements have not been made.

10.3 If the Contractor is a partnership or a consortium, this agreement must be signed by all partners or consortium members.

10.4 Should one or several provisions of this agreement turn out to be invalid, the remainder of this agreement remains valid. In this case, the parties will strive to come to an agreement to their original intentions.

10.5 Only those bidders / contractors who have entered into this agreement with the Principal would be competent to participate in the bidding. In other words, entering into this agreement would be a preliminary qualification.

---	---
For & On behalf of the Principal	For & On behalf of the Bidder/ Contractor
(Office Seal)	(Office Seal)
Place----------	
Date----------	
Witness:_____	Witness:_____
(Name & Address) _____	(Name & Address) _____
_____	_____

ಭಾರತ್ ಹೆವಿ ಎಲೆಕ್ಟ್ರಿಕಲ್ಸ್ ಲಿಮಿಟೆಡ್
भारत हेवी इलेक्ट्रिकल्स लिमिटेड

Bharat Heavy Electricals Ltd.(A Government of India undertaking)
Electronics Division PB 2606, Mysore Road Bangalore, 560026 INDIA

SPECIAL CONDITIONS OF CONTRACT

This "Special Conditions of Contract" will form an integral part of the contract as and when the RFQ culminates into a Purchase Order / Contract. Integrity commitment will be applicable in the tender process and execution of contracts.

Independent External Monitor (IEM) Name: Shri Otem Dai IAS (Retd.) / Shri Bishwamitra Pandey, IRAS (Retd.)/ Shri Mukesh Mittal, IRS (Retd)

PLEASE FIND ENCLOSED A COPY OF INTEGRITY PACT AGREEMENT. THE SAME HAS TO BE FILLED AND SIGNED BY AUTHORIZED SIGNATORY WHO SIGNS THE BID AND TO BE SUBMITTED ALONG WITH TECHNO-COMMERCIAL (PART-1 BID) OFFER. ONLY THOSE VENDOR/BIDDERS WHO HAVE ENTERED INTO SUCH AN IP WITH BHEL WOULD BE COMPETENT TO PARTICIPATE IN THE BIDDING. IN OTHER WORDS, ENTERING INTO THIS PACT WOULD BE PRELIMINARY QUALIFICATION.

Clause on IP in the tender

Integrity Pact (IP)

(a) IP is a tool to ensure that activities and transactions between the Company and its Bidders/ Contractors are handled in a fair, transparent and corruption free manner. Following Independent External Monitors (IEMs) on the present panel have been appointed by BHEL with the approval of CVC to oversee implementation of IP in BHEL.

Sl	IEM	Email
1.	Shri Otem Dai, IAS (Retd.)	iem1@bhel.in
2.	Shri Bishwamitra Pandey, IRAS (Retd.)	iem2@bhel.in
3.	Shri Mukesh Mittal, IRS (Retd.)	iem3@bhel.in

(b) The IP as enclosed with the tender is to be submitted (duly signed by authorized signatory) along with techno-commercial bid (Part-I, in case of two/ three part bid). Only those bidders who have entered into such an IP with BHEL would be competent to participate in the bidding. In other words, entering into this Pact would be a preliminary qualification.

(c) Please refer Section-8 of IP for Role and Responsibilities of IEMs. In case of any complaint arising out of the tendering process, the matter may be referred to any of the above IEM(s). All correspondence with the IEMs shall be done through email only.

Note:

No routine correspondence shall be addressed to the IEM (phone/ post/ email) regarding the clarifications, time extensions or any other administrative queries, etc on the tender issued. All such clarification/ issues shall be addressed directly to the tender issuing (procurement) department's officials whose contact details are provided below:

Details of contact person(s):

(1)
Name :Sarita Mohapatra
Deptt :SA-MM
Address :BHEL EDN, NEB 6th Floor, Mysore Road,Bangalore- 560026
Phone : 08026998239/7406555022
Email :sarita@bhel.in
Fax : 080 26989228

(2)
Name :Kanimozhi D
Deptt :SA-MM
Address :BHEL EDN, NEB 6th Floor, Mysore Road,Bangalore- 560026
Phone : 08026998842/ 9972060369
Email :kanimozhid@bhel.in
Fax : 080 26989228