BHARAT HEAVY ELECTRICALS LIMITED
TRANSMISSION BUSINESS GROUP
SUBCONTRACTS MANAGEMENT
5th Floor, Plot no.- 25, Sector-16 A, Noida
Dist.: - Gautambudh Nagar, UP-201301

TENDER DOCUMENTS

FOR

RECEIPT OF EQUIPMENT/MATERIAL AT SITE, UNLOADING, RECONCILIATION, INSPECTION, VERIFICATION, STORAGE, UP-KEEPING DURING STORAGE, ERECTION, TESTING, COMMISSIONING AND HANDING OVER OF 245KV GIS AND POTHEAD YARD, LTHPCL TEESTA-VI H. E. PROJECT IN SIKKIM.

CUSTOMER

M/s LANCO TEESTA HYDRO POWER LIMITED

TENDER SPEC. NO.: TBSM/TEESTA VI/ETC/TENDER/22-23

DATE:16.01.2023

TRANSMISSION BUSINESS GROUP
SUB-CONTRACTS MANAGEMENT

INDEX

Sl. No.	Description	No. of Pages
1.0	Notice Inviting Tender	10
2.0	Pre-Qualifying Requirements	03
3.0	Project Information/ BHEL's Contacts	01
4.0	Health, Safety & Environment specification (Doc. No.:- TBG/HSE/NIT-01, Rev-01 Date 22.10.2021)	18
5.0	Condition of Contract for ETC Works	106
6.0	Annexure to conditions of contract for ETC Works	25
7.0	Annexure A of Clause No M of Annexure to GCC for ETC -"BHEL Conciliation Scheme"	11
8.0	Bill Of Quantity Cum price schedule	04
9.0	Price Bid Format: - To be filled by the Bidder Online through https://eprocurebhel.co.in.	01
10.0	Technical Details & Drawings	70
11.0	No Deviation Certificate	01
12.0	Declaration for relation in BHEL	01
13.0	E payment Format	01

BHARAT HEAVY ELECTRICALS LIMITED

TRANSMISSION BUSINESS GROUP

SECTOR- 16A, NOIDA -201301

e-mail: dipak.mandal@bhel.in

NOTICE INVITING TENDER

REF.: TBSM/TEESTA VI/ETC/TENDER/22-23 **DATE: 16.01.2023**

SUB: TENDER FOR "RECEIPT OF EQUIPMENT/MATERIAL AT SITE, UNLOADING, RECONCILIATION, INSPECTION, VERIFICATION, STORAGE, UP-KEEPING DURING STORAGE, ERECTION, TESTING, COMMISSIONING AND HANDING OVER OF 245KV GIS AND POTHEAD YARD, LTHPCL TEESTA-VI H. E. PROJECT IN SIKKIM"

Dear Sirs,

1. **Sealed tenders are invited for the following:**

NAME OF WORK	TIME OF COMPLETION	EARNEST MONEY DEPOSIT	TENDER SUBMISSION DATE AND TIME	TENDER OPENING DATE & TIME
RECEIPT OF EQUIPMENT/ MATERIAL AT SITE, UNLOADING, RECONCILIATION, INSPECTION, VERIFICATION, STORAGE, UP-KEEPING DURING STORAGE, ERECTION, TESTING, COMMISSIONING AND HANDING OVER OF 245KV GIS AND POTHEAD YARD, LTHPCL TEESTA-VI H. E. PROJECT IN SIKKIM	31st January, 2024	₹ 1,58,493/- As per Annexure to conditions of contract for erection works	31.01.2023 14.30 hrs.	31.01.2023 15.30 hrs. (Technical bid only) and Price bid opening date will be intimated later to Techno commercially acceptable parties

2. Bidder **has** to submit offer directly through E-PROCURMENT MODE. Bidder may visit https://eprocurebhel.co.in

Procedure for Submission of Tenders through e tendering: The tender is also floated online through our E-Procurement Site https://eprocurebhel.co.in . The bidder may respond by submitting their offer online in our e-Procurement platform at https://eprocurebhel.co.in

Offers are invited in two-parts only.

Documents Comprising the e-Tender

The tender shall be submitted online as per the instructions mentioned below (EXCEPT EMD, as EMD shall be submitted in physical form as described in NIT clause. No.1 above):

a) Technical Bid (Un priced Tender)

All Technical details (eg. Eligibility Criteria requested (as mentioned below)) should be attached in e-tendering module, failing which the tender stands invalid & may be REJECTED. Bidders shall furnish the following information along with technical tender (preferably in pdf format):

- **i.** Earnest money Deposit (EMD) furnished in accordance with NIT Clause 4.0
- **ii.** Technical Bid (without indicating any prices).

b) Price Bid:

i. Prices are to be quoted in the attached Price Bid format online on e-tender portal.
ii. The price should be quoted for the accounting unit indicated in the e-tender document.
iii. Note: It is the responsibility of tenderer to go through the Tender document to ensure furnishing all required documents in addition to above, if any. Any deviation would result in REJECTION of tender and would not be considered at a later stage at any cost by BHEL.
iv. A person signing (manually or digitally) the tender form or any documents forming part of the contract on behalf of another shall be deemed to warrantee that he has authority to bind such other persons and if, on enquiry, it appears that the persons so signing had no authority to do so, the purchaser may, without prejudice to other civil and criminal remedies, cancel the contract and hold the signatory liable for all cost and damages.
v. A tender, which does not fulfil any of the above requirements and/or gives evasive information/reply against any such requirement, shall be liable to be ignored and rejected.

c) Uploading of the price bid in prequalification bid or technical bid may RESULT IN REJECTION of the tender.

d) Tenders shall be uploaded with all relevant PDF/zip format. The relevant tender documents should be uploaded by an authorized person having Class 3- SHA2- 2048 BIT- SIGNING & ENCRYPTION digital signature certificate (DSC).

3. **Tender must be accompanied by the prescribed amount of Earnest Money Deposit (EMD) in the manner described in "Annexure to the Conditions of contract for erection work "which shall be part of the Technical Bid.**

   In case of E-Tenders, no paper bids shall be accepted, therefore, the scanned copy of the Banker's Cheque/ Demand Draft/ Pay Order/ Details of payment made through Electronic Fund Transfer/ Fixed Deposit Receipt (FDR) / Bank Guarantee should be uploaded in the E-Procurement Portal and hard copy of the same should reach to following address at before the due date and time of bid submission. BHEL shall not be responsible for postal or any other delays in this regard.)

   TENDER SPEC. NO: TBSM / TEESTA VI / ETC / TENDER / 22-23 **DATE: 16.01.2023**
   To,

   Dipak Kumar Mandal
   AGM (TBSM)
   BHARAT HEAVY ELECTRICALS LIMITED,
   TRANSMISSION BUSINESS GROUP,
   Plot no.: - 25, Sector- 16A, Noida, Distt.- Gautambudh Nagar, UP-201301
   TELEPHONE: 0120-6748134, 99111 63182
   E-mail: dipak.mandal@bhel.in

4. **Bidders may please note that no other mode of bid submission shall be considered for evaluation apart from Clause no. 02 to 03 mentioned above.**

5. The prospective bidders who have downloaded the tender documents from our website are requested to send their acknowledgement and willingness to participate in the tender to the undersigned, through fax or email.

6. Offers should be strictly in accordance with the Tender Specifications and General Instructions to Tenderer enclosed herewith.

7. "BHEL shall be resorting to Reverse Auction (RA) (Guidelines as available on www.bhel.com) for this tender. RA shall be conducted among all the techno-commercially qualified bidders.

   Price bids of all techno-commercially qualified bidders shall be opened and same shall be considered for RA. In case any bidder(s) do(es) not participate in online Reverse Auction, their sealed envelope price bid along with applicable loading, if any, shall be considered for ranking."

8. The contractor shall give his explicit confirmation without any deviations to the HSE (Health, Safety and Environment) requirements as per enclosed Doc. No.:- TBG/HSE/NIT-01, Rev-01 Date 22.10.2021. Contactors are also required to furnish details as per Annexure (HSE) to NIT along with their offer. Offers received without compliance & data about HSE requirements are liable to be rejected.

9. All documents submitted with the offer shall be signed and stamped in each page by authorized representative of the bidder.

10. Clarifications, if any, can be obtained from the undersigned but such requests should be submitted well before the due date for submission of tenders. Due date for submission and opening of tenders will not be extended on such grounds.

11. Please note that wherever there is a contradiction between the 'Annexure to conditions of contract for erection works' and 'Conditions of contract for erection works', the 'Annexure to conditions of contract for erection works' clauses shall be governing and binding on the contractor.

12. **Drawings & FQP enclosed with the NIT (if provided) are for tender purpose only. Drawings & FQP may get change during execution stage and work to be carried as per latest RFC drawings & Field Quality Plan (FQP).**

13. **Construction/ RFC drawing/ Fronts shall be furnished progressively as per project requirement. No claim towards idling charges/ project overheads etc. are entertained on account of non-availability of drawings/ fronts.**

14. **Completion period of the work has been envisaged under best possible conditions. Any changes/ deviation during execution shall be dealt as per relevant clauses mentioned in general/ special conditions of contract for erection works.**

15. ***"In case this tender is awarded to first time contractor*, then the bidder shall be eligible to qualify for the next tender of similar work# of BHEL, TBG; only after successful executing of 50% (fifty percent) of this work prior to the date of next tender (in which bidder desires to quote) and on satisfactory performance feedback by BHEL site Incharge."***

    **** First time contractor: The bidders who have not successfully executed more than 50% (fifty percent) of awarded similar work by BHEL (TBG/ ISG/Power Sector/Any BHEL Unit) in last 5 years from date of NIT.***

    <u>The bidders who have taken any order from BHEL under 1st time category, and desires to further participate in BHEL tenders, needs to submit a certificate/ undertaking mentioning the reason of not executing 50% of awarded work, hence the criteria under 1st time bidder shall not be applicable to them. The certificate/ undertaking shall be duly certified by Site In charge of BHEL.</u>

    # Similar work: Similar to nature of work of the tender under consideration.

16. The Bidders are advised to visit Site to have better understanding of job.

17. The offers of the bidders who are under suspension as also the offers of the bidders, who engage the services of the banned firms, shall be rejected. The list of banned firms is available on BHEL web site www.bhel.com.

    1.0 Integrity commitment, performance of the contract and punitive action thereof:

    1.1. Commitment by BHEL:

    BHEL commits to take all measures necessary to prevent corruption in connection with the tender process and execution of the contract. BHEL will during the tender process treat all Bidder(s) in a transparent and fair manner, and with equity.

1.2. Commitment by Bidder/ Supplier/ Contractor:

1.2.1. The bidder/ supplier/ contractor commit to take all measures to prevent corruption and will not directly or indirectly influence any decision or benefit which he is not legally entitled to nor will act or omit in any manner which tantamount to an offence punishable under any provision of the Indian Penal Code, 1860 or any other law in force in India.

1.2.2. The bidder/ supplier/ contractor will, when presenting his bid, disclose any and all payments he has made, and is committed to or intends to make to agents, brokers or any other intermediaries in connection with the award of the contract and shall adhere to relevant guidelines issued from time to time by Govt. of India/ BHEL.

1.2.3. The bidder/ supplier/ contractor will perform/ execute the contract as per the contract terms & conditions and will not default without any reasonable cause, which causes loss of business/ money/ reputation, to BHEL.

If any bidder/ supplier/ contractor during pre-tendering/ tendering/ post tendering/ award/ execution/ post-execution stage indulges in mal-practices, cheating, bribery, fraud or and other misconduct or formation of cartel so as to influence the bidding process or influence the price or acts or omits in any manner which tantamount to an offence punishable under any provision of the Indian Penal Code, 1860 or any other law in force in India, then, action may be taken against such bidder/ supplier/ contractor as per extant guidelines of the company available on www. bhel.com and/or under applicable legal provisions".

18. Also, offer of the bidders who are suspended (under hold/ delist) for business dealings by BHEL, TBG shall not be considered. Please note that lifting/ restoration of suspension (Ban/Hold/ De-list) of business dealing is not automatic after expiry of specified suspension period. Hence, vendor shall be considered as suspended for business till suspension is lifted by BHEL in writing on specific request of the vendor as per extant guidelines.

19. BHEL Fraud Prevention Policy, The Bidder along with its associate/ collaborators/ sub-contractors/ sub-vendors/ consultants/ service providers shall strictly adhere to BHEL Fraud Prevention Policy displayed on BHEL website http://www.bhel.com and shall immediately bring to the notice of BHEL Management about any fraud or suspected fraud as soon as it comes to their notice.

20. Offers will be scrutinized based on the qualifying requirements and only those who are technically and financially capable to execute the Job and who fulfil the Pre-Qualifying Requirements (PQR) are eligible to quote against the above NIT. However, final acceptance of the bidder/ offer shall be subject to acceptance of our customer.

21. The evaluation currency for this tender shall be INR.

22. In the course of evaluation, if more than one bidder happens to occupy L-1 status, effective L-1 will be decided by soliciting discounts from the respective L-1 bidders.
In case more than one bidder happens to occupy the L-1 status even after soliciting discounts, the L-1 bidder shall be decided by toss/ draw of lots, in the presence of the respective L-1 bidder(s) or their representative(s).

Ranking will be done accordingly. BHEL's decision in such situations shall be final and binding.

23. Technical Bid will be opened in the office of undersigned. If required, technical discussions will be held with only those bidders who have taken any deviations. Bidders representative may be present during technical bid opening for technical discussion, if required. The price bids will be opened subsequently, after Technical Bids of all the bidders have been evaluated and freezed. Bidders should quote their most competitive rates as there will not be any price negotiation. However, if felt necessary by BHEL, price negotiation will be held with lowest bidder (L-1) only. **IT WOULD BE PREFERRED THAT YOUR OFFER IS WITHOUT ANY DEVIATION w.r.t. TENDER SPECIFICATIONS AND THE SAME MAY BE CLEARLY MENTIONED ON THE COVERING LETTER ACCOMPANYING THE TECHNICAL BID.** Offers with deviations are likely to be rejected. However, if the bidder insists on any

technical or commercial deviations, from the specification and/or tender conditions, the price implication if any, of withdrawing the deviations must be submitted along with the price bid in a separate sealed envelope superscribed "Price Implication for withdrawal of deviations".

24. In case any adverse information is received concerning performance, capability or conduct of the bidder after issue of tender enquiry, BHEL reserves the right to reject the offer at any stage as deemed fit.

25. Any materials (if required) for erection works have to be procured from Customer approved sources only. It will be the bidder's responsibility to get the approval of materials and vendors for materials.

26. The purchase preference for central P.S.Us shall be given as per the prevailing Government policy.

27. Work schedule and the deployment of manpower and T&P resources committed by the contractor in their offer, to match the scheduled completion, shall be submitted by contractor and mutually agreed with site In-charge immediately after the award of work. Further, the contractor shall mobilise at site within two weeks of award of work.

28. In case an offer is not being submitted by the prospective bidders against this tender, they may send their "regret" letter to this office, for information.

29. Details of qualifying work(s) executed by the bidder will be forwarded to the principal employer for verification of the work with respect to completion, commencement & completion date and value of the work executed. Performance feedback of the bidder will also be sought from the principal employer.

30. The bidder representative may be called for discussion with the committee. His originals may be verified by the committee. In addition to above their organisation chart and detail list of manpower, tools & plants and technically capability will be discussed and ascertained by the committee.

31. Conflict of Interest among bidders/Agents: -

"A bidder shall not have conflict of interest with other bidders. Such conflict of interest can lead to anti-competitive practices to the detriment of Procuring Entity's interests. ***The bidder found to have a conflict of interest shall be disqualified****. A bidder may be considered to have a conflict of interest with one or more parties in this bidding process, if:*

a) they have controlling partner (s) in common; ***or***

b) they receive or have received any direct or indirect subsidy/ financial stake from any of them; ***or***

c) they have the same legal representative/agent for purposes of this bid; ***or***

d) they have relationship with each other, directly or through common third parties, <u>that puts them in a position to have access to information about or influence on the bid of another Bidder</u>; ***or***

e) Bidder participates in more than one bid in this bidding process. Participation by a Bidder in more than one Bid will result in the disqualification of all bids in which the parties are involved. <u>However, this does not limit the inclusion of the components/ sub-assembly/ Assemblies from one bidding manufacturer in more than one bid</u>; ***or***

f) In cases of agents quoting in offshore procurements, on behalf of their principal manufacturers, one agent cannot represent two manufacturers or quote on their behalf in a particular tender enquiry. One manufacturer can also authorise only one agent/dealer. There can be only one bid from the following:

1. The principal manufacturer directly or through one Indian agent on his behalf; and

2. Indian/foreign agent on behalf of only one principal;

or

g) *A Bidder or any of its affiliates participated as a consultant in the preparation of the design or technical specifications of the contract that is the subject of the Bid;* ***or***

h) *In case of it holding company having more than one independently manufacturing units, or more than one unit having common business ownership/management, only one unit should quote. Similar restrictions would apply to closely related sister companies. Bidders must proactively declare such sister/ common business/ management units in same/ similar line of business.*

Thanking you,

Yours faithfully,
For and on behalf of BHEL,

(Dipak Kumar Mandal)
AGM /TBSM

TO BE FILLED BY TENDERER OVER THEIR LETTERHEAD

REF.: TBSM/TEESTA VI/ETC/TENDER/22-23 TENDER DATE: 16.01.2023

SUB: TENDER FOR "RECEIPT OF EQUIPMENT/MATERIAL AT SITE, UNLOADING, RECONCILIATION, INSPECTION, VERIFICATION, STORAGE, UP-KEEPING DURING STORAGE, ERECTION, TESTING, COMMISSIONING AND HANDING OVER OF 245KV GIS AND POTHEAD YARD, LTHPCL TEESTA-VI H. E. PROJECT IN SIKKIM.".

It is certified that General Instructions and Information for tenderer have been read/ complied/ agreed to and each page of tender offer has been initialled and stamped.

Also It is being declares that we (Bidder Name .) will not enter into any illegal or undisclosed agreement or understanding, whether formal or informal with other Bidder(s). This applies in particular to prices, specifications, certifications, subsidiary contracts, submission or non-submission of bids or any other actions to restrict competiveness or to introduce cartelization in the bidding process.

In case, the Bidder is found having indulged in above activities, suitable action shall be taken by BHEL as per extant policies/ guidelines

(Signature of Tenderer)

Name and Designation of Authorised person (s)
Signing the tender on behalf of the tenderer

Authorization of representative who will participate in the on line Reverse Auction Process:

1	NAME & DESIGNATION OF OFFICIAL	
2	POSTAL ADDRESS (COMPLETE)	
3	TELEPHONE NOS. (LAND LINE & MOBILE BOTH)	
4	FAX NO.	
5	E-MAIL ADDRESS	
6	NAME OF PLACE / STATE / COUNTRY, WHEREFROM S/HE WILL PARTICIPATE IN THE REVERSE AUCTION	

BHARAT HEAVY ELECTRICALS LIMITED

TRANSMISSION BUSINESS GROUP, NOIDA

PRE-QUALIFYING REQUIREMENTS

Tender Ref. No.: TBSM/TEESTA VI/ETC/TENDER/22-23 Date: 16.01.2023

SUB: Pre-Qualifying Requirements

Sl. No.	Criteria	Description
a.	Turn Over	Vendors should have a minimum average annual turnover of **₹23,77,391**/- for last three financial Years (2018-19, 2019-20 & 2020-21 OR 2019-20, 2020-21 & 2021-22) and should submit audited balance sheet and Profit & Loss Account Sheet of these years. In case audited balance sheet is not available due to turnover being less than statutory requirement of audit, bidder should furnish self-certified copies of Balance Sheet, Profit & Loss account along with income tax returns.
b.	Profit	Vendor should have earned profit in at least one year during last three financial years as mentioned in 'a' above.
c.	Similar Work	• Bidder should be an ISO certified company • Bidder Should have executed similar works* (as mentioned below) of following value: i. Three similar jobs executed costing (except service tax/GST) not less than **₹31,69,855**/- each. OR ii. Two similar jobs executed costing (except service tax/GST) not less than **₹39,62,319**/- OR iii. One similar job executed costing (except service tax/ GST) not less than **₹63,39,710**/-

Similar Work Definition*:

Bidder should have erected / installed, tested & commissioned at least three hydro power plants of 100MW or above earlier during the last ten (10) years ending on 31.12.2019.
With vertical turbine generator unit(s).

OR
Balance of Plant (Generator Transformers, 245kV GIS and 220kV XLPE Cable).

The equipment so erected should have been in successful operation.

Documentary evidence duly certified by contractor along with the complete details of the company profile be furnished.

Notes (General points):

a) Consideration of offer shall be subject to customer's approval of bidder's, if applicable.

b) Bidder to submit all supporting documents in English. If documents submitted by bidder are in language other than English, a self- attested English translated document should also be submitted.

c) Notwithstanding anything stated above, BHEL reserves the right to assess the capabilities and capacity of the bidder to perform the contract, should the circumstances warrant such assessment in the overall interest of BHEL.

d) After satisfactory fulfilment of all the above criteria / requirement, offer shall be considered for further evaluation as per NIT and all the other terms of the tender.

1. The word 'executed' means the bidder should have achieved the criteria specified in the PQR even if the total contract has not been completed or closed. Executed value of erection portion of work order shall be considered for evaluation against PQR.

2. If the similar work is executed in the last ten years period ending 31-12-2019, as specified above, even if it has been started earlier, the same will also be considered meeting the qualifying requirements.

3. **Consortium/ JV bidding is not allowed under this NIT.**

4. BHEL reserves the right to:

   (a) Accept or reject any bid received at its discretion without assigning any reasons whatsoever.
   (b) Postpone the above mentioned date, split and distribute the work among more than one bidder without assigning any reason whatsoever.

   (c) May ask for further qualification during techno commercial scrutiny of bids received.

   (d) May ask for further proofs including TDS certificates/ Final bill/Form 26AS/ payment detail for the said job for cross- verification.

5. BHEL shall not be responsible for any delay, loss, damage for bids sent by post.

6. BHEL shall not be liable for any expenses incurred by bidder in preparation of bid irrespective of whether it is accepted or not.

7. Quotations received from bidders who do not fulfil the PQR shall be summarily rejected without any further evaluation and information to bidders.

8. Canvassing i.e. soliciting favour, seeking advantage etc. in any form is strictly prohibited and any bidder found to have engaged in canvassing shall be liable to have his bid rejected summarily.

9. If the bidder deliberately gives any wrong information in his tender to create in circumstances for the acceptance to his bid, BHEL reserves the right to reject such application.

10. Bidder's selection is subject to approval of BHEL's customer for this work.

11. All corrigenda, addenda, amendments and clarifications to this Tender will be hosted in web page, www.bhel.com & https://eprocurebhel.co.in and not in the newspaper. Bidders shall keep themselves updated with all such amendments.

PROJECT INFORMATION

1.0 CUSTOMER:

M/s LANCO TEESTA HYDRO POWER LIMITED

2.0 PROJECT LOCATION AND DETAILS:

Project & Work details: - RECEIPT OF EQUIPMENT/MATERIAL AT SITE, UNLOADING, RECONCILIATION, INSPECTION, VERIFICATION, STORAGE, UP-KEEPING DURING STORAGE, ERECTION, TESTING, COMMISSIONING AND HANDING OVER OF 245KV GIS AND POTHEAD YARD, LTHPCL TEESTA-VI H. E. PROJECT IN SIKKIM

3.0 CONTACT PERSON: FOR CONTRACTUAL ISSUES

DIPAK KUMAR MANDAL
AGM (TBSM)
SUBCONTRACTS MANAGEMENT,
TRANSMISSION BUSINESS GROUP,
Plot no.: - 25, Sector- 16A, Noida,
Distt. Gautambudh Nagar, UP-201301

PHONE: 0120-674-8134/ 99111 63182
E-mail: **dipak.mandal@bhel.in**

4.0 CONTACT PERSON: FOR ENGINEERING ISSUES

Gaurav Vig
Dy. Manager / TBEM
TRANSMISSION BUSINESS GROUP,
Plot no.: - 25, Sector- 16A, Noida,
Dist. Gautambudh Nagar, UP-201301

PHONE: 0120-674-8457/ 9958271114
E-mail: gorav@bhel.in

5.0 CONTACT PERSON: FOR CONTRACT EXECUTION ISSUES

Lakshman Sarkar
GM (Eastern Sector & OS Projects)
TRANSMISSION BUSINESS GROUP,
Plot no.: - 25, Sector- 16A, Noida,
Dist. Gautambudh Nagar, UP-201301

PHONE: 0120-674-8126 / 9903039168
E-mail: lsarkar@bhel.in

HSE CONDITIONS
at a GLANCE (for bidders)

Health Safety and Environment Management

Transmission Business Group, Noida

DOCUMENT CONTROL			
Document number:	TBG/HSE/NIT-01		
Issue number:	00	Issue date:	08.01.2020
Revision number:	01	Revision date :	22.10.2021

	Prepared by	Checked by	Approved and Issued for use by
Name	Sanjeev Sharma	Arvind Kumar Pandey	Anindya Chakraborty
Designation	Addl. Engineer	Engineer	Adl. General Manager
Signature	-sd-	-sd-	-sd-
Date	22.10.2021	22.10.2021	22.10.2021

Doc. copy issue no. :	Doc. copy issue date :

	Name	Designation	Signature
Issued to :			
Issued by :			

BHARAT HEAVY ELECTRICALS LIMITED

TRANSMISSION BUSINESS GROUP

BHEL TBG through its long experience and policy, has developed a culture to consider wellbeing of the society, protection of environment and occupational health and safety of its workers first. TBG has also a culture of transparency in all its business activities. In line to this culture, this NIT annexure is prepared as a peeping window in to the TBG HSE requirements which need to be 100% complied by the successful bidders while executing the contract. Interested bidders should go through these HSE conditions:

1. BHEL HSE Policy

In BHEL, Health, Safety and Environment (HSE) responsibilities are driven by our commitment to protect our employees and people we work with, community and environment. BHEL believes in zero tolerance for unsafe work/non-conformance to safety and in minimizing environmental footprint associated with all its business activities. We commit to continually improve our HSE performance by:

- Developing safety and sustainability culture through active leadership and by ensuring availability of required resources.
- Ensuring compliance with applicable legislation, regulations and BHEL systems.
- Taking up activities for conservation of resources and adopting sound waste management by following Reduce/Recycle/Reuse approach.
- Continually identifying, assessing and managing environmental impacts and Occupational Health & Safety risks of all activities, products and services adopting approach based on elimination/ substitution/reduction/control.
- Incorporating appropriate Occupational Health, Safety and Environment criteria into business decisions, design of products & systems and for selection of plants, technologies and services.
- Imparting appropriate structured training to all persons at workplace and promoting awareness amongst customers, contractors and suppliers on HSE issues.
- Reviewing periodically this policy and HSE Management Systems to ensure its relevance, appropriateness and effectiveness.
- Communicating this policy within BHEL and making it available to interested parties.

June 5, 2018

Atul Sobti
Chairman & Managing Director

Creating BHEL of tomorrow

2. Legal Compliances:

a. Statutory Provisions: All the sub-contractors are to comply with client specific rules and procedures, the National legislations and codes, in particular the following or their revised versions:

Srl. No	Acts/Rules Name	Srl. No	Acts/Rules Name
1	The Factories Act 1948, Amendment Act 1947	11	Contractor labour Act, 1970 (Regulation and abolition)
2	The Environment Act 1986	12	Provident fund Act, 1952
3	Workmen's Compensation Act, 1923	13	Payment of gratuity Act, 1972
4	Building and Other Construction Workers (Regulation of employment and condition of service) Act, 1996	14	Indian Explosives Act and the explosives Rules 2008
5	Buildings and Other Construction Workers Welfare Act, 1996	15	The Gas Cylinder Rules, 2016, Static and Mobile Pressure Vessels (Unfired) Rules 2016
6	Payment of wages Act, 2017 Equal remuneration Act,	16	The Indian Electricity Act 2003 and Indian Electricity Rules 2005
7	Minimum wages Act.1948	17	The Atomic Energy Act, 2015
8	Employers liability Act, 1938	18	The atomic energy (Radiation Protection) Rules. 2004
9	Industrial dispute Act, 1947	19	National Fire Protection Association (NFPA),
10	maternity benefit amendment act 2017	20	National Building Code of India 2016 etc.

b. Indian Standard (IS) Codes related to HSE

All the sub-contractors are to comply with client specific rules and procedures, the National legislations and codes in particular the following or their revised versions:

Srl	IS Code	Applies on
1	IS: 4081 -1986	Safety code for Blasting and Related Drilling operations
2	IS: 3764 -1992	Safety code for excavation work
3	IS: 5121 -1969	Safety code for pilling and other deep foundations

4	IS: 2750 -1964	Specification for steel scaffoldings
5	IS: 3696 (Part-I)-1987	Safety code for scaffolds and Ladders: Part- I Scaffolds
6	IS: 3696 (Part-II) -1991	Safety code for scaffolds and Ladders: Part –II Ladders
7	IS: 4082 -1977	Recommendations on stacking and storage of construction materials at site (First revision)
8	IS: 4130-1976	Safety code for demolition of building (First revision)
9	IS: 4912-1978	Safety requirements for floor and wall openings, railings and toe boards (First revision)
10	IS: 5916- 1970	Safety code for constructions involving use of hot bituminous materials
11	IS: 7205 -1974	Safety code for erection of structural steel work
12	IS: 7969 -1975	Safety code for handling and storage of building materials
13	IS: 8989 -1978	Safety code for erection of concrete framed structures
14	IS: 7293 -1974	Safety code for working with construction machinery
15	IS: 2212 -1991	Pipe lines –Identification –Colour code
16	IS: 5216 -1982	Recommendations on safety procedures &practices in Electrical works (Part -I &II)
17	IS: 875 -1964	Code of practice for structural safety of buildings and loading standards
18	IS: 10386 -1983	General aspects Part-1 -1983, Part-2 -1982, Part-6 -1983, Part-10 -1983- Amenities, Protective clothing and equipment, construction, storage, handling, detection and Safety measures for gases, chemicals and flammable liquids
19	IS: 10500-2012	Drinking water (Specification)
20	IS: 10291 -1982	Code of dress in civil engineering works
21	IS: 2925-1984	Safety helmets
22	IS: 1179-1967	Welding helmets
23	IS: 7524 -1979 (Part-I)	Safety goggles
24	IS: 9167 -1979	Ear muff /Ear plugs
25	IS: 6994 -1973 (Part-I)	Canvas hand gloves, Cotton hand gloves, Chrome leather gloves
26	IS: 4770 -1991	Rubber hand gloves tested for 15,000 volts
27	IS: 3521 -1999	Full body safety harness
28	IS: 11057 -1984	Specification for Industrial safety nets
29	IS: 13415 -1992	Protective Barriers in & around buildings (Code of safety)

30	IS: 13416 -1992	Preventive measures against Hazards at work places-Recommendations part-I Falling materials hazards Prevention part-I
31	IS: 13416 -1992	Preventive measures against Hazards at work places-Recommendations part-II Fall Prevention
32	IS: 15298 -2011 (Part 1&2)	Personal Protective Equipment -Safety shoes
33	IS: 12254 -1993	Poly vinyl chloride (PVC) industrial boots
34	IS: 5557:2004	Industrial and Protective Rubber knee and Ankle boots
35	IS: 2878 -2004	Co2 Type fire extinguisher
36	IS: 2171 -1999	Dry chemical powder fire extinguisher
37	IS: 13849 – 1993	Fire extinguisher for ABC fires
38	IS: 10204-2001	Mechanical Foam type extinguisher (Foam used shall conform to IS: 4989 -1974 and Co2 cartridge shall conform to IS: 4947 -1985)
39	IS: 3786 -1983	Methods for computation of Frequency rate and Severity rates for Industrial injuries and classification of Industrial accidents (First revision)

c. The Sub-contractors need to

- Attend HSE familiarization program at TBG-HQ with his site management team. This will be a half day long awareness session on HSE requirements and compliances which the agency is supposed to fulfil during contract execution at site. The session shall be taken by TBG HSE department on intimation by TBSM. **(Rev-01)**
- Request for issuance of Form-V in their name from customer on behalf of BHEL
- Get the Labour license registration from concerned Labour office.
- Get the BOCW Registration done along with the labour license.
- Get their labourers registered under BOCW for benefits provided by the office.
- Maintain Seven registers of labours as per BOCW requirement.
- Ensure payment of wages to labours not less than the current minimum wages applicable in the premises.
- Ensure PF deduction of labourers and submission of proof to BHEL office (Wage sheet, ECR & Challan copies) duly signed.
- Submit Labour Payment Certificate by 10th of Every month.
- File timely returns, get renewals done and submit a copy to BHEL office.

- Get Workmen's Compensation policy before the start of work, covering all the labourers and staff,
  - Policy should clearly mention the project name and location,
  - should be as per labour class and wage.
  - Should cover all the height workers with clear mention of Max. height.
  - Policy should be submitted to BHEL office and renewal before expiry.
- Issue employment card to every worker.

3. Labour Welfare and Medical Facilities

a. Labour Welfare

1. Declaration of normal working hours and weekly off day, Payment day & intervals
2. Paid rest days & holidays.
3. Payment of overtime @ twice the normal wage rate.
4. No labour shall be allowed overtime >12 hrs/week, limited to 48 hrs/month.
5. Rest and lunch area.
6. Separate Male/Female Toilets and Lavatories, clearly marked in local Language and provided with signage.
7. Cold and clean drinking water facility suitable to strength and near workplace
8. Creche for children of female workers as per BOCW requirements
9. Arranging labour accommodation in hygienic environment with the facilities of Water (Drinking, Sanitation), washing and bathing area, toilets in sufficient nos., clean and safe camps and surrounding, access road, well illuminated camp and roads, mode of contact, transport facility, first aid centre, 24x7 Security etc.
10. Cooking and eating place to be maintained in hygienic condition
11. General awareness of health and hygiene.

b. Medical facilities and Health centres

- Availability of first aid box at every work location and agency office, with contents as per BOCW requirement.
- Emergency vehicle (four wheeler) at work place
- Availability of stretchers in emergency vehicle and in office.
- Trained first aider
- Medical check-up for all the supervisors and workers including cooks, at the time of induction and annually thereafter.
- Tetanus Vaccination for all in every six months.
- Identification and tie-up with nearby reputed hospital(s) and display of their contact number in Emergency contact list.

4. House Keeping & Storage

Housekeeping is a continuous process and is the part of work. Agencies shall maintain safe and presentable housekeeping all the time in their respective areas, common work locations and passage areas. Roads, passages, staircases, entrance/exit gates shall always be maintained obstruction free. No material shall be left or stacked at the roof edges. Agency shall make arrangements to remove scraps on regular basis and dispose them at a space provided by customer, clearly fenced and marked by the sub-contractor as **"SCRAP YARD"**. Suitable arrangement like dedicated housekeeping team and tractor/hydra should be identified for this work.

Construction materials like shuttering materials, staging materials, cables, re-bars, cements bags, earthing flats and rods, FF pipes, surplus soil etc should be stored/stacked properly such that it should neither pose threat to safety of man nor should obstruct the free movement of man and machineries.

Every sub-contractor should have separate and well maintained storage area for his own materials, T&Ps, PPEs and BHEL issued materials. Consumables like diesel, cotton, grease, oil, paint, admixtures and other fire potential materials should be stored separately with suitable firefighting facility.

Fire capacity of store area to be assessed and accordingly fire extinguishers shall be planned suiting the class and capacity of fire. Sand heaps may also be stacked in open store yards suitably to use in case of fires.

5. Site Safety

a. Induction and others safety trainings

Every sub-contractor shall make arrangement to provide induction training as per BHEL and/or customer requirement on a pre-approved and fixed module to all its new inductees irrespective of class or grade of appointment/hire. He shall also arrange the required facilities for induction training such as board, marker, dummy, posters/banners with all the mandatory PPEs.
Sub-contractor shall also arrange for periodic trainings on fire-fighting, first aid, CPR, importance and use of PPEs, electrical safety, hot work safety, Height work safety, confined space, deep excavations and barricading, concreting work safety etc.

b. Appointment of Safety Officer/Supervisor

Every sub-contractor shall appoint at least one full time qualified safety officer having qualification and experience as specified in Schedule-VIII of BOCW Act-1996. He shall not be assigned any duty/work other than assisting in upliftment of safety practices. He shall perform his duties in accordance with the requirements of Schedule-VIII of BOCW-1996. He shall ensure daily TBT, induction training, health check-up and other such compliances as per HSEP-14 on regular basis. In case of non-appointment, agency shall be penalized as per provisions in clause no. 7.0 of HSEP-14 (HSE Plan for Site Operations (subcontractors)) **(Rev-01)**

c. Safety organisation, Safety committees and meetings

Safety officer shall report directly to the head of the projects of the sub-contractor management. There shall be some appointed or nominated safety stewards from each sub-group like shuttering, bar-bending, concreting, brick work, material handling, structure erection, cable laying, pipe work, maintenance, batching plant, housekeeping etc.

A safety committee shall be formed including members from different agencies, BHEL and customer covering at-least 50% participation from workers. Safety committee shall meet on weekly basis or as may be decided by customer, outcomes shall be complied as committed.

d. Personal Protective Equipments.

Unless mentioned otherwise, there will be three mandatory PPEs- Safety shoes, Safety Helmet and Reflective jackets conforming to relevant IS codes as mentioned above.
Every person entering in the project premises shall use above mandatory PPEs.
There will be other PPEs too based on the work requirement like:
Twin lanyard full body harness, fall arresters and life lines for height workers,
Face shield for welders and grinders, Induction helmets and Electrical resistant shoes with FRP/PVC toe for electricians and commissioning engineers, Gum boots for concrete workers and manual excavators, Goggle for gas cutters and grinders, Aprons for welders, shoulder pads for material handlers, Hand gloves – Leather for binders/welders/grinders, certified Rubber gloves

for electricians, PVC for concrete/cement handlers, cotton-housekeeping team/brick coolies/erectors, cable laying men and other material handlers. Dust mask for cement handlers.

e. Material Handling

BHEL as a policy discourages continuous manual handling. Material handling contributes a major portion in the project and hence proper means (mechanical/ electrical powered) should be deployed appropriately for this work. Cranes/Faranas/hydras should not be used for material transportation for long distances(>100m), if such movement is un-avoidable, it must be accompanied by a trained signal man. Long materials should be guided by tagline. Roads for material movement should be free from obstructions. Lifting appliances must be in good condition and must have test/inspection certificates.
Lifting tackles like- D-shackles, chains, ropes, slings, belts shall be periodically inspected and shall have valid test certificate and/or third party inspection certificates.
Painted/galvanized structures/materials to be lifted by adequate capacity nylon belts only.
If a machine undergoes a major maintenance, fresh TPI shall be required before use. Hydraulic/pneumatic machines shall be free from leakages. Daily checklist to be filled and witnessed by the concerned supervisor before start of the work.

f. Vehicle/Machinery Documents and other safety requirements

- Crawler mounted boom cranes/Tyre mounted telescopic cranes/tower cranes
  1. Valid third party inspection certificate.
  2. Valid Insurance policy
  3. Registration Certificate (if applicable)
  4. Valid Pollution under control (PUC) (if applicable)
  5. Fitness certificate from RTO (if applicable)
  6. Operator's valid license, experience and/or competence certificate.
  7. Swing horn
  8. Reverse horn
  9. Boom aviation light
  10. Approved Load chart (inside cabin)
  11. Fire extinguisher (inside cabin)
  12. First aid kit (inside cabin)
  13. Boom angle indicator
  14. Hook Latch
  15. Reflector strips on around cabin and on boom

- Loader backhoe (JCB), crawler excavators (Poclain), Hydra,
  1. Valid third party inspection certificate.
  2. Valid Insurance policy
  3. Registration Certificate (if applicable)
  4. Valid Pollution under control (PUC) (if applicable)

5. Fitness certificate from RTO (if applicable)
6. Operator's valid commercial license, experience and/or competence certificate.
7. Reverse horn
8. Approved Load chart (inside cabin) (Hydra)
9. Fire extinguisher (inside cabin)
10. First aid kit (inside cabin)
11. Hook Latch (Hydra)
12. Reflector strips on around cabin and on boom

- Tipper, Transit mixtures (TM), Self-loading concrete mixture (Ajax Fiori), Tractors
    1. Valid third party inspection certificate.
    2. Valid Insurance policy
    3. Registration Certificate
    4. Valid Pollution under control (PUC)
    5. Fitness certificate from RTO
    6. Operator's valid commercial Heavy license, experience and/or competence certificate.
    7. Reverse horn
    8. Fire extinguisher (inside cabin)
    9. First aid kit (inside cabin)
    10. Reflector strips on around cabin and on body

Note: 1. Tractors may be allowed with Light Commercial/non-commercial license on customer's consent.

- Cars, Taxis, scooters, motor cycles and other public carriers
    - Valid 2/4 wheeler license (as applicable- commercial/non-commercial)
    - Registration Challan
    - Valid Insurance
    - Pollution under control

g. Man-lifts (Cherry pickers), Scissors Lifts

1. Trained operator with experience/competence certificate and license
2. Valid third party inspection certificate.
3. Valid Insurance policy
4. Registration Certificate (if applicable)
5. Valid Pollution under control (PUC) (if applicable)
6. Swing horn
7. Reverse horn
8. Boom aviation light
9. Fire extinguisher (inside cabin)
10. First aid kit (inside cabin)
11. Reflector strips on around cabin and on boom

Note:

1. No one shall ride man-lift bucket without safety belt, safety shoes, helmet and reflective jacket.
2. Not more than 3 persons at a time will board in bucket of man-lift (without any heavy materials) including operator.
3. Operator will not leave the machine while persons are elevated and working.
4. No one other than the authorised operator will operate the man lifts/Scissors lifts.

h. Excavation

Prior permission/clearance from customer is a must for excavations in areas where underground service services such as gas/water/oil/chemical/electrical lines may be routed. Due precautions shall be taken during excavation in such area. Excavations near water bodies (ponds/canals etc.) shall be done with sand/soil bags ready to plug water from accidental damaged/burst of edges. All the excavations shall be done by either step cutting (min. 600mm step at every 1.5m depth) or slope cutting at 1:2(X:Y axis) (or greater depending upon the soil condition). Where step cutting/slope cutting is not possible due to space constraints, shoring/shuttering or sheet piling to be used to check collapse of soil.

Excavated soil shall be stacked away from edge of the pit, at-least 1.5 meters or half of the depth whichever is higher. Height of the stack shall not exceed 2m in height.

Ramps shall be provided for access of the workers in large pits and ladder of metal/good built for small pits. Ladders shall be of sufficient length protruding at least 1m above the ground level.

Pumps of adequate capacity shall be available for pumping out of water. No lone worker shall be allowed to work in any excavation. Overloaded vehicle shall not be allowed near excavated pits.

i. Bar bending and Binding

Bar bending machine shall be installed under shed/roof. It shall be properly earthed and maintained for operation. Housekeeping of the area shall be team's responsibility on daily basis. All be bar benders shall be given hand gloves (leather/cotton) in addition to mandatory PPEs. Scrap shall be segregated and moved to scrap yard on regular basis. Bar bending station shall be located away from Main plying roads/passages. The station shall be well illuminated, shall have a maintained first aid kit and potable water. Station shall be located in such a way that the movement of the material be minimised.

j. Concreting

No electric vibrators shall be allowed to use. All the concrete workers shall be issued gum boots, safety helmets, reflective jackets and PVC hand gloves. Free fall of concrete from chute shall not exceed 1m in height. Heavy machineries/ vehicles shall be kept at least 2m away from the edge. Emergency vehicle shall be available near concreting work. Late night works shall be avoided, if it is unavoidable, a prior permission from BHEL/Customer is mandatory.

k. Welding, Gas Cutting & other hot works

Welding: Only experienced welders should be deployed for welding jobs. Welders shall be provided with apron, hand gloves, arm pads, leg pads, face shield and safety shoes. Welding leads shall be joint less and insulated. Power input point shall be fully covered at machine.

Gas cutting: If LPG is being used, domestic cylinder is strictly prohibited inside the project premises, (not allowed for site kitchen too). Hose pipes shall be in good condition without cracks, cuts, punctures or joints. Ends should be clamped with worm clamps. Dial gauges shall be of good quality and duly calibrated. Flash back arresters is a must for both oxygen/acetylene or LPG/Oxygen combination. Cylinders shall be stored, transported and used in vertical position only. When not in use, they shall be capped. Empty and filled cylinders to be stored separately with distinct marking.
Cylinders shall neither be rolled on the ground nor thrown during loading/unloading.

Grinding: Grinder shall be given clear glass face shield, apron, safety shoes, ear muffs and hand gloves. Grinder machines shall have wheel guard. Plug tops to be used for power connection preferably three wire type. Only trained persons shall be allowed to use grinders, abrasive cutters. Electrical connection shall be free from cuts, joints etc.

l. Erection & Height Work

Only trained filters and experienced helpers shall be engaged in erection work. Step bolts of lattice towers shall be checked for full tightness with spring washers before use. Height pass shall be issued to the identified group of erectors who have passed medical test and have working experience at height. Name of such workers shall be displayed at appropriate place. These workers only shall be allowed to work at height. Height work shall not be permitted in high wind/bad weather condition, during raining or in night/dark.

m. Electrical Safety

BHEL usually provided single point power source and sub-contractors draw power from there. Otherwise agencies make their own arrangement for construction power like DG sets etc. Sub-contractors shall submit their load requirement (amperage & phase) to BHEL before start of work. Accordingly, they shall make arrangements to draw power and distribution arrangements too in a safe way. MCCBs and HRC fuses to be put in circuit for short circuit and overload protections and RCCBs of 30mA sensitivity to be put at each distribution panel for human safety. Earthing pits shall be installed at each distribution point and maintained below three Ohm resistivity which shall be inspected randomly. The distribution points shall be clean, free from vegetation and water logging, easily accessible and covered/protected from three sides and top for rain. Earthing of DBs shall be done by 25x3mm GI flats connected from proper earth pits. Insulation mat, PVC Sheet/Wooden plank to be placed before DBs as platform. DB Sheds shall be legibly marked with name of agency, contact no of electrician and SLD of that DB. Only industrial plugs and sockets shall be allowed. Three wire (Phase, neutral and earth) system shall be used for tools, lights and machineries and two wire power draw shall be strictly prohibited. PTW and LOTO system shall be maintained to work on LT system. Name and contact no of authorised electricians who will be responsible of electrical power facility maintenance shall be submitted to BHEL by Agencies. Unauthorised sharing of power from one agency to other is strictly prohibited. Electricians shall use standard PPEs and insulated tools only. Standard and tested/certified discharge rods to be used in the areas where there is a possibility

of residual current or induction charge. The induction rod to be connected to the earth first and removed in the last. Induction helmets only to be used in the charged area. Electricians to be provided with electrical resistant safety shoes having FRP/PVC toe.

n. Dust Gases and fumes

Sub-contractor shall make arrangements to avoid accumulation of dust fumes and gases. Cement handlers inside store or at batching plant and gravel spreader shall be given effective nose masks and jaggery (at least 200g per person per day). DG sets and other machineries like cranes excavators etc. shall have valid and effective PUC certificate and shall have maintained engine with silencer. No IC engine operated machine shall be used in confined and covered area like hall, sheds, store etc. where accumulation due to lack of ventilation can increase to harmful levels. Dedicated arrangements (tanker or tractor with sprinkler) shall be made by the sub-contractors (individual or jointly) to continuously subside the dusts arising out of the movement of the vehicles roads/passages. Welding activities near roof accumulates harmful gases. Welders in such positions shall be provided with effective masks conforming to IS standards.

o. Vehicular Traffic

Speed limits defined within the premises shall strictly be followed by the drivers/commuters of construction as well as other vehicles.

Every construction machinery, man-lift shall display the name, contact no and passport size photograph of the authorised operator (There can be one or more authorised operators).

No one other than operator and co-operator shall sit inside the cabin of any construction machine while it is working.

Construction machineries (tractor, trucks, tippers, JCBs, hydra, Fassi cranes etc. shall never be used as mode of public transport. Machineries like Ajax Fiori and hydra shall not be driven in back direction except for small distances. No overloaded vehicle shall be permitted entry in the project premises.

Over speeding shall be reported and driver/operator shall be barred from entry or shall be penalised.

Drunken drivers shall be barred from entry in the project.

Carrying harmful weapons like knives (>6”), guns etc. shall permanently disqualify the person from entry in project premises.

p. Barricading and floor openings

Every pit deeper than 4 feet (1.2m) shall be barricaded immediately after excavation and will remain barricaded till backfilling.

Pits/trenches drains near roads, passages whether temporary or permanent shall be hard barricaded and well illuminated. Roof edges and openings shall be strictly hard barricaded and illuminated. Height works like masonry works, structure erection, erection by cranes, Lattice tower/beam erection areas shall be barricaded to restrict entry. Areas under charging/commissioning shall be barricaded and caution boards shall be displayed on newly charged areas.

q. Scaffold & Ladder

No bamboo/wooden scaffold shall be allowed to be used. Only tubular steel scaffolds with couplers conforming to the relevant IS codes shall be allowed with base plates. Standard steel or wooden planks to be used as platforms and no packing materials shall be used. All the platforms shall be built with provisions of **top rail at 1m height, mid rail at 0.5m height and toe boards of min 6" height** at floor level. Minimum width of platform shall be 900mm and if wheel barrow is to be used then 1200mm. Means of access to be provided in the form of ladders, ramps or staircase. Multilevel work platforms or those platforms having passage underneath shall be provided with safety net, screen or canopy at each level for protection from falling objects. Platforms shall be free from concrete, debris or other materials. Platforms shall not extend out of the putlogs and shall be secured and fastened. Decking shall be made non-skidding.
Scaffolds under erection shall be tagged **"RED"**, under repair/maintenance/inspection shall be tagged **"YELLOW"** and ready for use shall be tagged **"GREEN"**

Only metal ladders in the construction site and FRP ladders in charged areas shall be allowed. Ladders made from packing materials shall not be used. Ladders shall be securely fixed at bottom, top and long ladders at middle points too at an interval not more than 2400mm and must have a landing at every 6m. Inclination angle should be approximately 1:4 (X:Y) or 75deg. Ladder must extend at least 1m above the platform/access area. Gap between two rungs shall not exceed 300mm. Portable ladder should not be more than 4m in length. Minimum width of the ladder shall not be less than 300mm.

Use of Mobile aluminium scaffold is preferably advisable for erection of transformers/reactors.

r. Illumination

The sub-contractor shall ensure that the areas such as work stations, buildings, batching plants, passages/roads, stores, rest areas, power sources, staircases etc. are illuminated sufficiently to make safe work conditions at site and shall not be less than the relevant IS standards. Excavations/ below ground level structures near passages/roads shall also be sufficiently illuminated.

s. Safety banners/posters, caution boards

Sub-contractors shall display boards and banners in sufficient quantity having safety signs, slogans, important messages, pictures, cautions at prominent locations to promote safety and spread awareness for important precautions such as "Deep Excavation Ahead", Speed Limit", "Charged Area", "Do not operate", "Hard hat area", "No smoking Zone" etc. Boards containing messages of Emergency contacts, First aid facility, rates of minimum wages, working hours, rest day etc. should be displayed at specific areas.

t. Waste management and disposal

Sub-contractor shall make suitable and effective arrangement to remove waste material from site on regular basis and store them in an identified and safe location. Disposal of wastes shall also be done as per manufacturer's instructions or as per the guidelines laid by legal authorities. Re-bars, Cement bags, packing material (wooden/metal/plastic/paper), paint, oil, grease, cables (armour, sheathing, insulation), civil debris, metal chips, GI sheet scraps, batteries etc. are the common waste materials. Sub-contractor

shall arrange disposal of the hazardous wastes/materials in conformance to the legal and contractual requirements only.

u. Inspection of PPEs, T&Ps, Machineries and lifting appliances

All the PPEs, T&P and lifting appliances purchased newly by sub-contractors shall have test certificates which shall be submitted to BHEL office periodically or on demand. There shall be at least monthly joint inspection schedule for inspection of healthiness of all the PPEs, T&Ps and lifting appliances. All the lifting appliances shall be tested and examined by a competent person before taking into use for the first time or after it has undergone any alterations or repairs liable to affect its strength or stability

and also once at least in every twelve months. To confirm quality of the PPEs as per the relevant IS codes, BHEL may ask sub-contractors to get any or all types of PPEs tested through NABL approved lab as per relevant IS codes. At any stage, the 100% cost of such tests shall be in the scope of respective sub-contractors.

v. Cable Laying

Sub-contractor shall ensure cable trenches free from water, mud, debris, snakes, Scorpios, lizards before start of the work in trenches. Cable drum rollers shall be used to pull cables out of drums to avoid twisting of cables. Hand gloves, Safety shoes/gum boots, reflective jackets, safety helmets shall be provided to the workers. Cable laying area shall be well illuminated.

w. Fire Protection

Every sub-contractor has to maintain their working area, store and office area free from bushes. Stacking of flammable materials like wood, paper, plastic, paint, oil, grease, fuel, cotton, gases etc. at isolated place disconnected from other storage and office areas. Adequate arrangements of firefighting means like suitable extinguishers, fire/water buckets, water tanks, sand dunes etc. shall be made by the agency depending upon the fire capacity assessed or as per MSDS. Fire drills and trainings on how to operate fire extinguishers and how to react in case of fire breakouts shall be the part of regular training program. Guards and store persons must be a regular participant of such training programs. A list of trained firefighting persons and periodicity of such training programs shall be submitted to BHEL by every agency and same to be adhered. Sufficient number of fire extinguishers with suitable class shall be placed at such locations where there can be fire hazard like stores, pantry, office, DG set, electrical distribution panels etc.

x. Fencing of exposed rotating parts

Exposed rotating parts poses great threat to the person in vicinity. Such parts need to be fenced/covered. Guards are mandatory of grinders, abrasive cutters. Flywheels of the engines of heavy machines, Diesel engines, DG sets need to be covered. Electric winch machines, pulleys, chains, shafts, exhaust fans at reachable height, table fans, need to be caged/fenced. Such fencing/guard shall not be removed while machinery is in operation.

y. Emergency preparedness response plan and periodic mock drills.

Sub-contractor shall comply JSA (Job Safety Analysis) and arrange to mitigate the effects of identified possible hazards. He shall also define following in response to emergency preparedness:
An emergency assembly point and put a board of the same with information to all in induction training.
Have facility of ambulance or tie-up with nearest hospital for service in minimum possible time (Max-30min) if there is not ambulance inside the premises.
Ensure availability of emergency vehicle with driver all the time at site during work.
Conduct mock-drills on possible risks like electrocution, fall from height, fire, heat stroke etc., record responses and take photographs to submit in BHEL office. Stretchers availability in emergency vehicle or at work place should be well accessible. Provide fire extinguishers of right type at right place in right quantity with information to all. Display emergency contact nos. to various risk locations and at office, service building or at major work locations. Provide first aid training by doctors for and display names of such trained first aiders and fire fighters. Rescue kit with trained staff or man lift or both to rescue a man hanging by safety belt at height. Provide running water tap near chemical storage and handling points. Agencies shall follow emergency response plan prepared by BHEL in each area of work, store and office.

z. Safety reports & Reporting of accidents

BHEL will provide ''formats and checklists'' for the purpose of records/documents pertaining to the compliance of aforesaid clauses. Agencies shall be responsible for strict adherence and compliance for timely generation and fill-up of the checklists and reports. These shall be submitted on weekly and monthly basis as specified in the formats.

Agency shall also promote such an environment that the near misses, incidents and accidents are reported by every person, whosoever witnesses them. These shall help in analysing the trend and taking measures in reducing/stopping the accidents/incidents. Initial reporting can be in any form-by call, SMS, WhatsApp, e-mail, letter etc.
Major and fatal accidents or high potential incidents shall be investigated for route cause and outcomes shall be immediately implemented to check recurrences.

6. General conditions and penalty clauses

Following are the general conditions:

PPEs shall not only bear the ISI mark but also be conforming to the required standards, 100% compliance of the PPEs is mandatory.
Over speeding of vehicles shall attract penalty/notice and recurrence will attract debarring from entry into project premises.
Hiding of facts like incidents, accidents, fake/forged reports/certificates shall also attract penalty/ notice or both. Only approved third party agencies shall be allowed to inspect the machines, T&Ps. Reports shall directly be sent to BHEL/customers by the third parties.
Insurance and TPIs to be renewed before expiry. Machines, T&Ps shall not be allowed to work if renewal delayed. Continuity of WC policy to be maintained religiously by the respective agencies.

Agency shall submit the status report of his labour license, BOCW registration, WC Policy, insurance & TPI validity on monthly basis with list of machineries and T&Ps

Sub-contractors shall also maintain a buffer stock of all the PPEs in at least 20% excess to the present strength of the work force.

If construction power is not drawn as per the guidelines laid in clause no. 5(m), given above, BHEL may take-up this work at the risk and cost of the agency and/or may withhold a sum of min. Rs. 50,000/- (Rs. Fifty Thousand) or more as the site in-charge deems fit till the system is aligned as per aforesaid requirement.

Agencies shall be responsible for the compliance of the above requirements. Failure in one or more clauses/area shall attract a notice or monitory penalty or a combination of above.

Monitory penalty will be

- Rs. 1000/- per person/incident per day for non-conformity in above areas.
- A Major/severe accident shall attract a penalty of Rs. 2,00,000/- per head
- Fatality or permanent disability with total loss of earning capacity, if any, will attract a penalty of Rs. 5,00,000/- (Rs. Five Lakh).
- Further fatality/permanent disability shall attract double the last penalty imposed on the agency.
- Above penalties are exclusive of medical expenses of the victim or compensation to the family through insurance policy (WC Policy or group insurance).
- **Penalties imposed by customer shall be fully transferable to the sub-contractor. In the event of above cases, penalties shall be imposed whichever will be higher.**
- Evaluation of agency's performance on HSE compliance shall be done as per BHEL guide lines/system.

Revision History

Revision Date	Revision No.	Old Text	New Text	Reason	Revised by (with sign)
03.05.2019	00	N/A	Full Document	New Release	
12.10.2021	01	Nil	Attend HSE familiarization program at TBG-HQ with his site management team. This will be a half day long awareness session on HSE requirements and compliances which the agency is supposed to fulfil during contract execution at site. The session shall be taken by TBG HSE department on intimation by TBSM. (at page no. 5)	For better understanding of HSE requirements to agency. (HSE Review meeting dated 23.08.2021)	
12.10.2021	01	Edition	Inclusion of penalty provisions in case of non-deployment of safety person(page-8)	Introduction of HSEP-14	

-:End of Document:-

BHARAT HEAVY ELECTRICALS LIMITED

TRANSMISSION BUSINESS GROUP,

NEW DELHI

CONDITIONS OF CONTRACT

FOR

ERECTION WORKS

DOC. NO. – TB-ETC-GCC,REV.-02
20th JUNE, 2005

INDEX

S.No.	Description	Page No.
A.0	**GENERAL INSTRUCTIONS TO TENDERERS**	**05 – 31**
A.1.0	Procedure for submission of Sealed Tenders	6
A.2.0	Procedure for evaluation of Price Bids	6
A.12.0	Data to be enclosed	8
A.13.0	Earnest Money Deposit	9
A.14.0	Authorization and Attestation	10
A.15.0	Validity of Offer	11
A.16.0	Execution of Contract	11
A.17.0	Security Deposit	11
A.19.0	Rejection of Tender and Other conditions	14
Annex-A	Details of work executed/ Being Executed	17
Annex-B	Proposed Manpower	18
Annex-C	Status of Tools, Plants and Instruments	19
Annex-D	Analysis of Unit Rate	20
Annex-E	Declaration sheet	21
Annex-F	Checklist and Schedule of General Particulars	22
Annex-G	Deleted.	
Annex-H	Contract Agreement	23
Annex-I	Form of BG for Security Deposit	25
Annex-J	Proforma for Performance Guarantee	27
Annex-K	Revised offer in lieu of Deviation withdrawal	30
Annex-L	BG confirmation letter from Banker	31
B.0	**GENERAL TERMS AND CONDITIONS**	**32-61**
B.1.0	Definitions	33
B.2.0	Law governing the contract and Court Jurisdiction	35
B.3.0	Issue of Notice	35
B.4.0	Use of Land	36
B.5.0	Commencement of Work	36
B.6.0	Measurement of work and Mode of Payment	36
B.7.0	Rights of BHEL	38
B.8.0	Responsibility of Contractor in respect of local laws	40
B.9.0	Responsibility of Contractor in respect of Safety	44
B.10.0	Consequences of Cancellation	47
B.11.0	Insurance	48
B.12.0	Strikes and Lockouts	48
B.13.0	Force Majeure	49
B.14.0	Guarantee	49

B.15.0	Arbitration	50
B.16.0	Variations and Valuations of variations	51
Annex-M	Programme of Work	54
Annex-N	List of Test Equipment	54
Annex-P	Activities for Testing and Commissioning	58
Annex-Q	List of Tools and Tackles	61
C.0	**SPECIAL CONDITIONS OF CONTRACT**	**63 - 76**
C.1.0	Qualification of Contractor	64
C.2.0	Terms of Payment	65
C.3.0	Security Deposit	66
C.4.0	Performance Guarantee	67
C.5.0	LD/Penalty for Delay in Execution	67
C.6.0	Receipt/Unloading etc. at site	68
C.7.0	Facilities to be provided by contractor	68
C.8.0	Testing and Commissioning	68
C.9.0	Completion of Contract	70
C.10.0	Trial Operation and Handing over	70
C.11.0	Additional Expenditure	71
C.12.0	Splitting the work	71
C.13.0	Supply of Material	71
C.14.0	Electricity and Water	72
C.15.0	Insurance	73
C.16.0	Escalation/Price Variation	73
C.17.0	Over run charges	73
C.18.0	Construction Schedule	73
C.19.0	Heavy material handling Equipment	73
C.20.0	Calibrated Test Instruments	73
C.22.0	Protection of Work	74
C.23.0	Safety Measures	74
C.24.0	Quality Records	74
C.28.0	Working Hours	75
C.29.0	Division of Work	75
C.30.0	Income Tax/Sales Tax/Works Tax	75
C.31.0	Discrepancies and Adjustment of Errors	76
D.0	**ERECTION CONDITIONS OF CONTRACT**	**78-94**
D.1.0	General	79
D.2.0	Regulation of Local Authorities & Statutes	79
D.3.0	Owner's Lien on Equipment	80
D.4.0	Re-works etc.	80
D.5.0	Access to site and works on site	80
D.6.0	Contractors Site office Establishment	80

D.7.0	Co-operation with other contractors	81
D.8.0	Discipline of Workmen	81
D.9.0	Contractors Field Operation	82
D.10.0	Photographs and Progress Reports	82
D.11.0	Manpower Report	83
D.12.0	Protection of Work	83
D.13.0	Employment of Labour	83
D.14.0	Facilities to be provided by Owner	84
D.15.0	Facilities to be provided by Contractor	84
D.16.0	Lines and Grades	85
D.17.0	Fire Protection	86
D.18.0	Security	86
D.19.0	Contractors Area Limits	87
D.20.0	Contractor's co-operation with Owner/BHEL	87
D.21.0	Pre -commissioning Trials and Initial Operation	87
D.22.0	Material handling and Storage	88
D.23.0	Construction and Arrangements	90
D.24.0	Field Quality Plans and Records	91
D.25.0	Contractor's Material brought to site	91
D.26.0	Protection of Property and Contractors liability	92
D.27.0	Painting	92
D.28.0	Protection of Monuments and Reference Points	92
D.29.0	Work and Safety Regulations	93
D.30.0	Electrical Safety Regulations	93
D.31.0	Consumables	94
D.32.0	MS and Aluminium Welding	94

E.0 SCOPE OF WORK AND COMPLETION SCHEDULE 96-106

E.1.0	Scope of work	97
E.2.0	Erection, Testing and Commissioning Requirements	100
E.3.0	Method of workmanship and Quality of work	101
E.4.0	Equipment, Material and Services to be provided	102
E.5.0	Testing and Commissioning Equipment	104
E.6.0	Preparation for Commissioning	104
E.7.0	Minor Civil works	105
E.8.0	Price Schedules	106
E.9.0	Start of work and completion schedule	106
E.10.0	Schedule of Equipment	106

SECTION- A

GENERAL INSTRUCTIONS TO TENDERERS

SECTION - A

GENERAL INSTRUCTIONS AND INFORMATION FOR TENDERER

A.1.0 : PROCEDURE FOR SUBMISSION OF SEALED TENDERS

Please refer Annexure to the Conditions of Contract for Erection work attached with the tender documents

PART - II (PRICE - BID) COVER - II:

Rate/Price Schedule only shall be given in this part - II "Price Bid".

A.2.0 : PROCEDURE FOR EVALUATION OF PRICE BID

Please Refer "ANNEXURE TO CONDITIONS OF CONTRACT FOR ETC WORKS" attached with the tender document

A.3.0

Please Refer "ANNEXURE TO CONDITIONS OF CONTRACT FOR ETC WORKS" attached with the tender document

A.4.0

A.5.0

A.6.0

A.7.0

A.8.0

A.9.0

A.10.0

A.11.0

A.12.0

A.12.1

A.12.2 Please Refer "ANNEXURE TO CONDITIONS OF CONTRACT FOR ETC WORKS" attached with the tender document

A.12.3 Three years financial turn over (certified), present commitments with all orders in hand, value of total order, value completed, and balance with completion dates as per Annexure-A.

A.12.4 **ORGANISATION CHART & MANPOWER DEPLOYMENT**:

The organisation pattern and the manpower that are totally available with him & that will be deployed by the tenderer for this work in the form of month wise and category wise deployment plan duly indicating the number of Engineers, Supervisors, Skilled and Unskilled Workers etc. as per proforma at Annexure-B shall be submitted.

A.12.5 A list of machines, tools and plant that the tenderer is having and those that will be deployed on this job giving proof of ownership or any tie-up of equipment as per proforma enclosed at Annexure-C.

A.12.6 Analysis of unit rate quoted as per proforma enclosed at Annexure-D.

A.12.7 Declaration sheet as per proforma enclosed at Annexure-E.

A.12.8 Checklist as per proforma enclosed at Annexure-F.

A.12.9 Certificate from schedule Bank to prove his financial capacity to undertake the work or solvency certificate from the concerned Government Authority.

A.12.10 A certificate of Income Tax/Sales Tax verification from the appropriate authority in the forms prescribed duly indicating annual turnover. These certificates shall be valid for one year from the date of issue or for the period prescribed therein for all tenders submitted during the period.

A.12.11 In addition to the above, the particulars required elsewhere in the tender documents.

A.12.12 NOTE: In terms of clauses A.12.1 to A.12.11 above, all the data required to be enclosed with the tender need to be furnished neatly typed, signed & stamped in the given formats only (in the form of separate sheets) failing which the tender may be considered as incomplete and is liable for rejection. Documentary proof wherever necessary also need to be enclosed.

A.13.0 EARNEST MONEY DEPOSIT

A.13.1 Please refer " Annexure to conditions of contract for ETC Work" attached with the tender documents.

A.13.2

A.13.3

A.13.4

A.13.5 Please refer " Annexure to conditions of contract for ETC Work" attached with the tender documents.

A.13.6

A.13.7

A.13.8

Above clause No. A.13.0 stands deleted. Please refer Annexure to conditions of contract for ETC works.

A.14.0 **AUTHORISATION AND ATTESTATION:**

A.14.1 Tenders shall be signed by persons duly authorised / empowered to do so. Certified copies of such authority and relevant documents shall be submitted along with the tenders.

A.15.0 **VALIDITY OF OFFER:**

A.15.1 THE OFFER SHALL BE KEPT OPEN FOR ACCEPTANCE FOR A MINIMUM PERIOD OF FOUR MONTHS FROM THE DATE OF OPENING OF TENDERS. In case the BHEL calls for negotiations, such negotiations shall not amount to cancellation or withdrawal of the original offer which shall be binding on the tenderer.

A.16.0 **EXECUTION OF CONTRACT :**

A.16.1 The successful tenderer's responsibility under this contract commences from the date of issue of the Letter of Intent by BHEL. The successful tenderer shall be required to execute an agreement in the prescribed form as per Annexure-H with BHEL within a reasonable time after the acceptance of his tender and in any case before submitting the first bill for payment. The expenses for completion, stamping and registration of the agreement with prescribed authority if necessary, shall be borne by the contractor.

A.17.0 **SECURITY DEPOSIT:**

Please refer " Annexure to conditions of contract for ETC Work" attached with the tender documents.

A.17.1

e)

f)

Please refer " Annexure to conditions of contract for ETC Work" attached with the tender documents.

g)

h)

i)

j)

k)

l)

Note

A.17.2

Please refer " Annexure to conditions of contract for ETC Work" attached with the tender documents.

A.17.3

A.17.4

A.17.5

A.17.6

A.17.7

Above clause No. A.17.0 stands deleted. Please refer Annexure to conditions of contract for ETC works.

.

A.19.0 **REJECTION OF TENDER & OTHER CONDITIONS:**

A.19.1

Please Refer "ANNEXURE TO CONDITIONS OF CONTRACT FOR ETC WORKS" attached with the tender document

A.19.2

A.19.3

A.19.4

A.19.5

A.19.6

A.19.7

A.19.8

A.19.9

A.19.10

A.19.11

A.19.12

Please Refer "ANNEXURE TO CONDITIONS OF CONTRACT FOR ETC WORKS" attached with the tender document

A.19.13 The tenderers must go through Annexure 'Q' of Section-B which details out the List of Tools, Tackles & Calibrated Test Equipments to be arranged by ETC contractor together with special purpose instruments which can be provided by BHEL free of cost for execution of work provided the same is informed to BHEL on award of contract.

Also, Annexure 'Q' gives the details of specialised Services which can be provided by BHEL for system commissioning on NO CHARGE basis with advance intimation to 'ENGINEER' in this regard. The tenderer must also see Clause E.4.2 & E.6.3 of Section E for more details.

A.19.14 IT WOULD BE PREFERRED THAT YOUR OFFER IS WITHOUT ANY DEVIATION w.r.t. TENDER SPECIFICATIONS AND THE SAME MAY BE CLEARLY MENTIONED ON THE COVERING LETTER ACCOMPANYING THE TECHNICAL BID. Offers with deviations are likely to be rejected. However if the bidder insists on any technical or commercial deviations, from the specification and/or tender conditions, the price implication if any, of withdrawing the deviations must be submitted along with the price bid in a separate sealed envelope superscribed "Price Implication for withdrawal of deviations". No price implication for withdrawal of deviation shall be accepted at a later date, after the opening of technical bid.

ANNEXURE - A

DETAILS OF WORK EXECUTED / BEING EXECUTED

A) WORK EXECUTED

SL. NO.	FINANCIAL YEAR	CUSTOMER	DESCRIPTION OF WORK	TOTAL ORDER VALUE	REMARKS

B) WORK BEING EXECUTED

SL. NO.	CUSTOMER	DESCRIPTION OF WORK	TOTAL VALUE	VALUE OF THE PORTION COMPLETED	ACTUAL START DATE	EXPECTED COMPLE-TION DATE	REMARKS

(SIGNATURE OF TENDERER)
WITH STAMP

ANNEXURE - B

(A) PROPOSED MANPOWER (ENGINEERS / SUPERVISORS) RESOURCES FOR EXECUTION OF WORK

SL. NO.	NAME OF STAFF	QUALIFICATION	EXPERIENCE IN YEARS	REMARKS

(B) MONTH WISE MANPOWER DEPLOYMENT PLAN

SL. NO.	CATEGORY	INDICATE NO. OF PERSONS TO BE DEPLOYED IN EACH MONTH								
		1st	2nd	3rd	4th	5th	6th	7th	8th	AND SO ON

(C) Total Man-days planned to be deployed for the work : .....Man-days

Plus man-days for unskilled labour as per site requirement.

(SIGNATURE OF TENDERER)
WITH STAMP

ANNEXURE - C

(A) STATUS OF TOOLS, PLANTS & INSTRUMENTS

Sl. No.	Name of Eqpt.	Quantity owned	Registration No. wherever applicable	Documents enclosed for proof of Ownership/Tie-up	Present Location	Quantity proposed to be deployed for this job

(B) MONTH WISE TOOLS, PLANTS & INSTRUMENTS DEPLOYMENT PLAN

Sl. No.	Description of Tools, Plants and Instruments	(Indicate No. to be deployed in each month)							
		1st	2nd	3rd	4th	5th	6th	7th	and so on

(SIGNATURE OF TENDERER)
WITH STAMP

ANNEXURE - D

ANALYSIS OF UNIT RATE

Sl. No.	DESCRIPTION	PERCENTAGE OF THE UNIT RATE	REMARKS
01	Salary & Wages for staff & workers		
02	Materials (a) .....) (b) .....) (c) .....) (d) .....)		
03	Depreciation & maintenance for T & P		
04	Depreciation & maintenance for other items		
05	Establishment & Admn. expenses of site		
06	Overheads		
07	Profit		

(SIGNATURE OF TENDERER)
WITH STAMP

ANNEXURE -E

DECLARATION SHEET

I ..... hereby certify that all the information and data furnished by me with regard to this Tender Specification No. ..... are true and complete to the best of my knowledge. I have gone through the specification, conditions and stipulations in detail and agree to comply with the requirements and intent of specifications.

(SIGNATURE OF TENDERER)
WITH STAMP

ANNEXURE - F

CHECKLIST & SCHEDULE OF GENERAL PARTICULARS

NOTE: Tenderers are requested to fill in the following details and no column should be left blank.

1.	Name & Address of the Tenderer	:	
2.	Telegraphic/telex address	:	
3.	Phone/Fax No. (Office)	:	
4.	Name & designation of the official of the tenderer to whom all the references shall be made	:	
5.	Tenderer's Proposal No. & date	:	
6.	Whether EMD submitted (by cash/ Bank Guarantee/Bank Draft)	:	By.....
7.	Validity of offer/rates quoted for six months from the date of opening of tender	:	Yes/No
8.	Attested copy of power of attorney as per Clause-A.12.1	:	Yes/No
9.	Solvency Certificate submitted as per Clause-A.12.9	:	Yes/No
10.	Income Tax/Sales Tax Certificate submitted as per Clause-A.12.10	:	Yes/No
11.	Details of work executed/being executed as per Annexure-A	:	Yes/No
12.	Monthwise & Category wise manpower deployment plan as per Annexure-B	:	Yes/No
13.	Status of Tools, Plants and Instruments & their month wise deployment plan as per Annexure-C	:	Yes/No
14.	Analysis of unit rate quoted as per Annexure-D	:	Yes/No
15.	Declaration sheet as per Annexure-E	:	Yes/No
16.	Request for registration (for new tenderers) submitted	:	Yes/No

Date .....

(SIGNATURE OF TENDERER)
WITH STAMP

WITNESS : (Signature with full particulars)

1.
2.

ANNEXURE - H

C O N T R A C T A G R E E M E N T

CONTRACT NO. :
LETTER OF INTENT NO. :
WORK ORDER NO. :

1. The Contract Agreement entered into the day of ....., 20... (..... day of .....two thousand and……. ....) at New Delhi between M/S BHARAT HEAVY ELECTRICALS LIMITED, TRANSMISSION BUSINESS GROUP, New Delhi, having it's Registered Office at BHEL House, Siri Fort, New Delhi - 110 049 (hereinafter called the FIRST PARTY which expression shall include their executors, administrators, successors and permitted assigns)

   AND

   M/S ..... (hereinafter called the SECOND PARTY which expression shall include their executors, administrators, successors and permitted assigns).

2. And whereas the FIRST PARTY called for the offer for the work of..... as per approved specifications, drawings and quality plan at ..... as per Tender Specification No..... , dated .....

3. Whereas the SECOND PARTY submitted their offer No. ..... dated ..... against above.

4. Whereas the FIRST PARTY has accepted the offer referred to above & issued Letter of Intent No....., dt..... and also detailed Work Order No…….. dt .....

5. Whereas the SECOND PARTY has agreed to work as Sub-Contractor of the FIRST PARTY on the conditions specified in the Tender Specifications at a contract price of Rs....……..(Rupees.....)

6. Now, therefore it is hereby mutually agreed to by and between the parties hereto as under :

   a) The SECOND PARTY shall execute the works of ..... at ..... on the conditions specified in Tender Specifications of FIRST PARTY and Letter of Intent referred to herein before at a total contract price of Rs..... ……(Rupees .....)

   b) That the SECOND PARTY shall organise all activities and mobilisation of facilities so that the work specified herein before is completed by .....as per the time bound programme mentioned in the Tender Specifications.

c) That all disputes arising out of or relating to this agreement shall be referred to the sole Arbitrator as per arbitration clause mentioned in the Tender Specifications. The Arbitrator from time to time with the consent of the parties enlarge the time for making and publishing award without reference to the court for the purpose.

d) That the jurisdiction in all suits or claims arising out of this agreement shall be of New Delhi Courts only.

e) The Following documents shall form part of this agreement :-

i)
ii)
iii)
iv)
v)
vi)

7. Deviation Limit : The contract value is subject to deviations depending upon the actual requirement within plus or minus 30%. Quantities of individual items may vary to any extent or may get deleted.

8. Terms of Payment : The terms of payment applicable to this contract shall be those covered under Point No.... of Work Order dt. ..... and as per Tender Specifications.

9. Abandoning the work : In the event of the SECOND PARTY abandoning the work, FIRST PARTY reserves the right to get the unfinished work done at the risk and cost of the SECOND PARTY.

10. All other terms and conditions shall be as stipulated in the Tender Documents.

11. This contract agreement consists.... pages.

IT WITNESS WHEREOF, the parties have signed this agreement on the date, month and year first above written in presence of:

For and on Behalf of
(FIRST PARTY)

WITNESS (WITH ADDRESS)

For and on Behalf of
(SECOND PARTY)

1.
2.

ANNEXURE - I

MODEL FORM OF BANK GUARANTEE (FOR SECURITY DEPOSIT)

1.

Please Refer "ANNEXURE TO CONDITIONS OF CONTRACT FOR ETC WORKS" attached with the tender document

2.

b)

c)

5.

Please Refer "ANNEXURE TO CONDITIONS OF CONTRACT FOR ETC WORKS" attached with the tender document

6.

7.

NOTE

ANNEXURE - J

PROFORMA FOR PERFORMANCE GUARANTEE
(to be used in appropriate value non - judicial stamp paper)

1. This deed of guarantee made this ..... day of ..... 20… by ..... Bank Limited ..... in favour of Bharat Heavy Electricals Limited, having their registered office at BHEL House, Siri Fort, New Delhi - 110 049.

2. Whereas M/s ..... (hereinafter called the CONTRACTOR / SELLER have entered into a Contract bearing No. ..... dated..... (hereinafter called the CONTRACT) for supply / civil works /erection, testing and commissioning of M/s Bharat Heavy Electricals Limited (hereinafter called the COMPANY).

3. And whereas the said CONTRACT Inter - alia provides that the CONTRACTOR / SELLER shall pay to the COMPANY a sum of Rs. ..... only towards Performance Guarantee in the form and manner therein specified.

4. And whereas the SELLER / CONTRACTOR have approached ..... Bank Limited (hereinafter referred to as the GUARANTOR) and at their request and in consideration of the arrangement arrived at between the CONTRACTOR and the GUARANTOR, the GUARANTOR has agreed to give the Guarantee as hereinafter mentioned in favour of the COMPANY.

NOW THIS DEED WITNESSES AS FOLLOWS:

5. The GUARANTOR by the hand of Mr. ..... and its lawfully and fully constituted attorney and do hereby guarantee the due and faithful performance of the said CONTRACT and do hereby irrevocably undertake and promise to pay the COMPANY without any demur merely on demand made by them a sum not exceeding Rs. ..... only in case the COMPANY sustains any loss or damage by reason of any breach, default by the CONTRACTOR / SELLER of any of the terms, conditions, stipulations or undertakings or any one of them contained in the said CONTRACT and the tender documents attached hereto and for payment of any moneys payable by the CONTRACTOR / SELLER to the COMPANY under the terms and conditions of the said CONTRACT. The decision of the COMPANY regarding the breach, default, loss, damage and payment shall be conclusive and binding in the GUARANTOR, irrespective of the fact whether the CONTRACTOR / SELLER admits or denies such claims or questions its correctness in any court, tribunal or arbitration proceedings or before any other authority.

6. The COMPANY shall have the fullest liberty without effecting in any way the liability of the GUARANTOR under this guarantee, from time to time to vary any of the terms and conditions of the CONTRACT or extend time by the SELLER / CONTRACTOR or to postpone for any time and from time to time any of the powers exercisable by its against the SELLER / CONTRACTOR and either to enforce or forbear from enforcing any of terms and conditions governing the CONTRACT or securities available to the COMPANY and the GUARANTOR shall not be released from its liability under these presents by any exercise by the COMPANY of the liberty with reference to the matters aforesaid or by reason of time being given to the SELLER or any other forbearance, act or omission on the part of the COMPANY or any indulgence by the COMPANY to the SELLER / CONTRACTOR or of any other matter or thing whatsoever which under the law relating to sureties, would but for this provision have the effect of so releasing the GUARANTOR / CONTRACTOR from its liability under this Guarantee.

7. This Guarantee shall remain in full force and effect and the GUARANTOR shall be liable under the same irrespective of any concession or time being granted by the COMPANY to the CONTRACTOR in or for fulfilling the said CONTRACT and this Guarantee shall remain in full force irrespective of any change in terms and conditions, stipulations or any variations in the terms of CONTRACT irrespective of whether notice of such change and / or variation is given to the GUARANTOR or not and the claim to receive such notice of any change and or variation of the terms / or conditions of the CONTRACT is hereby specially waived by the GUARANTOR.

8. The GUARANTEE herein contained shall not be determined, prejudiced or effected by the liquidation or winding up or insolvency of or change in the constitution of the CONTRACTOR but shall in all respects and for all purposes be binding and operative until all payments or all moneys due or that may hereafter become payable to the COMPANY are paid in respect of any liability or obligation of the CONTRACTOR under the CONTRACT.

b) The GUARANTOR further agree that the Guarantee herein contained shall remain in full force and effect during the period that would be taken for the commencement of the CONTRACT till end of the CONTRACT and its claim satisfied or discharged and till the COMPANY certified that the terms and conditions of the CONTRACT have been fully and properly carried out by the SELLER and accordingly discharges this guarantee, subject, however, that the COMPANY shall have no claim under this Guarantee after ..... months from the date of completion of the Guarantee has been served on the GUARANTOR before the expiry of the said period in which case the same shall be enforceable against GUARANTOR not withstanding the fact that the same is enforced after expiry of said period.

The GUARANTOR undertake not to revoke this Guarantee during the period it is in force except with the previous consent of the COMPANY in writing and agree that any liquidation or winding up or insolvency or dissolution or any change in the constitution of the SELLER or the GUARANTOR shall not discharge the GUARANTOR's liability here under.

It shall not be necessary for the COMPANY to proceed against the SELLER before proceeding against the GUARANTOR and the Guarantee herein contained shall be enforceable against them not withstanding any security which the company may have obtained or obtained from the SELLER shall at the time when proceedings are taken against the GUARANTOR here under be outstanding or unrealized.

The GUARANTOR hereby declares that it has power to execute this Guarantee and the executant has full powers to do so on its behalf under the proper authorities granted to him / them by of the guarantor.

10. Not withstanding anything herein before contained, our liability under this Guarantee is restricted to Rs. ..... (Rupees .... only) and will expire on ..... and unless a claim in writing is presented to us or an action or suit to enforce the claim is filed against us, within six months from the date, all our rights shall be forfeited and we shall be relieved and discharged from all our liabilities thereunder.

IN WITNESS whereof the ..... (Bank) have hereunto set and subscribed their hands the day, month and year first above written.

SIGNED FOR AND ON
BEHALF OF THE BANK

WITNESS:

NAME AND ADDRESS **SIGNATURE**

1.

2.

ANNEXURE - K

REVISED PRICE OFFER IN LIEU OF WITHDRAWAL OF DEVIATIONS/ CLARIFICATIONS OFFERED BY BHEL DURING TECHNICAL DISCUSSION

Sl. No.	Clause Ref.	Description of Deviation/ Clarification	Whether Increase/ Decrease in Price	Unit Rate (if applicable)	Total Increase/ Decrease	Remarks

NOTE: Total increase or decrease in total price shall be indicated either in percentage or in value (Rs.).

(SIGNATURE OF TENDERER)
WITH STAMP

ANNEXURE -L

(On Bank's Letter Head)

To,
AGM(Finance)
Transmission Business Group,
Block-VI, Central Annexe, IInd Floor,
Bharat Heavy Electricals Ltd.
Bhopal – 462 022

Ref & Date

Sub : Confirmation of Bank Guarantee no. <<BG No.>>

We are a Scheduled Bank other than Co-operative sector Bank under the RBI Act 1934. The aforesaid << BG No.>> for Rs. <<BG Amount>>/ (In Words Also) and valid up to <<validity date>> is issued by us on behalf of M/s << Beneficiary's Name>> in favour of BHARAT HEAVY ELECTRICALS LTD.
The format of the Bank guarantee is strictly as per the format prescribed by M/s BHEL and the stamp papers forming part of the BG are as per the state rules extant.

The signatures to the Bank Guarantee are duly authorised.

Thanking you,

For & On behalf of
Name of the Bank & Seal

(Please Sign here)

SECTION-B

GENERAL TERMS AND CONDITIONS

SECTION - B

GENERAL TERMS AND CONDITIONS

B.1.0 The following terms shall have the meaning hereby assigned to them except where the context requires otherwise:-

B.1.1 BHEL (or B.H.E. Ltd.) shall mean Bharat Heavy Electricals Limited, a Company registered under Indian Companies Act 1956, with its Registered Office at BHEL House, Siri Fort, New Delhi-110 049 or its Authorised Officers or its Engineer or other Employees authorised to deal with any matters with which these persons are concerned.

B.1.2 "GENERAL MANAGER" shall mean the Officer in Administrative charge of the Contracting Unit of BHEL.

B.1.3 "ENGINEER" OR "ENGINEER-IN-CHARGE" shall mean Engineer deputed by BHEL. The term includes "Deputy General Manager, Construction Manager, Resident Engineer, Assistant Site Engineer of BHEL/at the site as well as the officers in charge at Head Office.

B.1.4 "SITE" shall mean the place or places at which the plants/equipments are to be erected and services are to be performed as per the specification of this tender.

B.1.5 "CLIENTS OF BHEL" or "CUSTOMER/OWNER" shall mean the organisation to whom BHEL is responsible for this work.

B.1.6 "CONTRACTOR" or “ETC CONTRACTOR” shall mean the individual, firm or Company who enters into this Contract with BHEL and shall include their executors, administrators, successors and assigns.

B.1.7 "CONTRACT" or "CONTRACT DOCUMENT" shall mean and include the agreement, the work order, the accepted appendices of rates, Schedules of Quantities, if any, General Terms and Conditions of Contract, Special Conditions of Contract, Instructions to Tenderer, the drawings, the Technical Specifications, the Special Specifications, if any, the tender documents and the Letter of Intent\Accepting Letter issued by BHEL. Any conditions or terms stipulated by the tenderer in the tender documents or subsequent letters shall not form part of the Contract unless specifically accepted in writing by BHEL in the Letter of Intent and incorporated in the Agreement.

B.1.8 "GENERAL CONDITIONS OR CONTRACT" shall mean the "Instructions and Information for Tenderer and General Terms and Conditions" pertaining to the work detailed.

B.1.9 "TENDER SPECIFICATIONS" shall mean the Special Conditions, Technical Specifications, Appendices, Site Information and drawings pertaining to the work for which the tenderer are required to submit their offer. Individual Specification Numbers will be assigned to each technical specifications.

B.1.10 "TENDER DOCUMENTS" shall mean the General Terms and Conditions and Tender Specifications.

B.1.11 "LETTER OF INTENT" shall mean the intimation by a letter/telegram/telex/ fax to the tenderer that the tender has been accepted in accordance with provisions contained in the letter. The responsibility of the contractor commences from the date of issue of this letter and all the terms and conditions of contract are applicable from this date.

B.1.12 "COMPLETION TIME" shall mean the period by date specified in the Letter of Intent/Work Order or date mutually agreed upon for handing over of the erected equipment/plant which are found acceptable by the Engineer being of required standard and conforming to the specifications of the contract.

B.1.13 "ZERO DATE" shall mean the planned commencement date of work under this tender and shall be date of issue of Letter of Intent.

B.1.14 "PLANT OR PROJECT OR SWITCHYARD" shall mean and connote the entire assembly of the plant and equipments covered by the contract.

B.1.15 "EQUIPMENT" shall mean all equipments, machineries, materials, structural, electrical and other components of the plant covered by the contract.

B.1.16 “TESTS" shall mean and include such test or tests to be carried out by the contractor as are prescribed in the contract or considered necessary by BHEL, in order to ascertain the quality, workmanship, performance and efficiency of the contracted work or part thereof.

B.1.17 "APPROVED" "DIRECTED" or "INSTRUCTED" shall mean approved, directed or instructed by BHEL.

B.1.18 "WORK OR CONTRACT WORK" shall mean and include supply of all categories of labour, specified consumables, tools and tackles required for complete and satisfactory site transportation, handling, stacking, storing, civil and electrical works, erection, testing & commissioning of the equipment to the entire satisfaction of BHEL.

B.1.19 "SINGULAR AND PLURAL" etc. words carrying singular number shall also include plural and vice versa, where the context so requires. Words imparting masculine gender shall be taken to include the feminine gender and words imparting persons shall include any Company or Association or Body or Individuals, whether incorporated or not.

B.1.20 "HEADINGS" The headings in these General Conditions are solely for the purpose of facilitating reference and shall not be deemed to be part thereof or be taken into consideration in the interpretation of construction thereof or the contract.

B.1.21 "MONTH" shall mean calendar month.

B.1.22 "WRITING" shall include any manuscript typewritten or printed statement under the signature or seal as the case may be.

B.2.0 **LAW GOVERNING THE CONTRACT & COURT JURISDICTION**:

The Contract shall be governed by the Law for the time being enforce in the Republic of India. The Civil Court at New Delhi having ordinary Original Civil Jurisdiction shall alone have exclusive jurisdiction in regard to all claims in respect of this contract.

B.3.0 **ISSUE OF NOTICE**:

The contractor shall furnish to the Engineer, the name, designation and address of his authorised agent and all complaints, notices, communications and references shall be deemed to have been duly given to the Contractor, if delivered to the Contractor or his authorised agent and shall be deemed to have been so given in the case of posting on the day on which they would have reached such address in the ordinary course of post or at which they were so delivered or left.

B.4.0 **USE OF LAND:**

No land belonging to BHEL or its customer under temporary possessions of BHEL shall be occupied by the contractor without the written permission of BHEL.

B.5.0 **COMMENCEMENT OF WORK:**

B.5.1 The contractor shall commence the work within fifteen days of Letter of Intent or the time indicated in the Letter of Intent/Work Order and shall proceed with the same with due expedition without delay.

The Contractor shall have to give programme of work in Annexure 'M' to the ENGINEER-IN-CHARGE after mobilisation at site. This will have to be regularly updated / revised so as to meet the Project completion schedule as per requirement of BHEL /Owner.

B.5.2 If the successful tenderer fails to commence the work within the stipulated time, BHEL, at its sole discretion will have the right to cancel the Letter of Intent/ Contract. His Earnest Money and/or Security Deposit will stand forfeited without any further reference to him without prejudice to any and all of BHEL's other rights and remedies in this regard.

B.5.3 All the works shall be carried out under the direction and to the satisfaction of BHEL/Customer/Owner.

B.5.4 The transported equipment, erected/constructed plant or work performed under the contract, as the case may be, shall be taken over when it has been completed in all respect and/or satisfactorily put into operation at site.

B.6.0 **MEASUREMENT OF WORK AND MODE OF PAYMENT:**

B.6.1 All payments due to the contractor shall be made only by "Account Payee Cheques".

B.6.2 For progress/running bill payments, the contractor shall present detailed measurement sheets in duplicate duly indicating all relevant details based on technical documents, protocols & material test reports and connected drawings for the work done during the calendar month/period under different categories in line with terms of payment as per Letter of Intent. The basis of arriving at the quantities/ weights shall be the relevant documents and drawings released by BHEL.

These measurement sheets shall be prepared jointly with Engineer and signed by both parties. Where required, joint measurement with Customer/Owner shall have to be taken.

B.6.3 The measurement sheets will be checked by the Engineer and quantities and percentage eligible for payment under different groups shall be decided by him. The abstract of quantities and percentage so arrived at based on the terms of payment shall be entered in the Measurement Book & signed by both the parties. Where required counter signature of Customer/Owner shall have to be taken.

B.6.4 Based on the above quantities, contractor shall prepare the bills in the prescribed proforma and work out the financial value. These will be entered in the Measurement Book and signed by both the parties. Payment shall be made by BHEL after effecting the recoveries due from the Contractor.

B.6.5 All recoveries due from the contractor for the month/period shall be effected in full from corresponding running bills unless specific approval from Competent Authority is obtained to the contrary.

B.6.6 Measurement shall be taken jointly by person duly authorised by BHEL and the Contractor.

B.6.7 The Contractor shall bear the expenditure involved, if any, in taking the measurements and testing of materials to be used in the works. The Contractor shall without extra cost to BHEL, provide all the assistance with appliances and other things necessary for measurement.

B.6.8 If at any time due to any reason whatsoever, it becomes necessary to remeasure the work done, in full or in part, the expenses towards such re-measurement shall be borne by contractor.

B.6.9 Passing of bills covered by such measurement does not amount to acceptance by BHEL of the completion of the work measured. Any left out work has to be completed by the Contractor, as directed by BHEL.

B.6.10 Final measurement bill shall be prepared in the proforma prescribed for the purpose, based on the certificate issued by the Engineer that the entire work as stipulated in the tender specification has been completed in all respects to the entire satisfaction of BHEL.

The contractor shall give unqualified "No claim" and "No Demand" certificates. All the tools and tackles loaned to him should be returned in condition satisfactory to BHEL. The abstract of final quantities and financial values shall also be entered in the Measurement Book and signed by both the parties. The final bill shall be paid after completion of all the defects/deficiencies etc. pointed out by BHEL. The contractor should submit all the original documents such as material consumption, site order book etc. maintained at site. After payment of final bill only guarantee obligation, percentage value shall remain unpaid which shall be released in accordance with Clause A.15.0.

B.7.0 **RIGHTS OF BHEL:**

B.7.1 Please Refer "ANNEXURE TO CONDITIONS OF CONTRACT FOR ETC WORKS" attached with the tender document

B.7.2

B.7.3

B.7.4

B.7.5 Please Refer "ANNEXURE TO CONDITIONS OF CONTRACT FOR ETC WORKS" attached with the tender document

B.7.6

B.7.7

B.7.8

B.7.9

Please Refer "ANNEXURE TO CONDITIONS OF CONTRACT FOR ETC WORKS" attached with the tender document

B.7.10

B.7.11

B.8.0 **RESPONSIBILITY OF THE CONTRACTOR IN RESPECT OF LOCAL LAWS, EMPLOYMENT OF WORKERS ETC:**

The following are the responsibilities of the Contractor in respect of observance of local laws, employment of personnel, payment of taxes etc.

B.8.1 As far as possible, unskilled workers shall be engaged from the local areas in which the work is being executed. In case of any necessity is felt by the contractor to bring labourers from out side State, provisions of law governing such immigration by the concerned State are to be followed.

B.8.2 The Contractor at all times during the currency of this contract, shall in all his dealings with the local labour for the time being employed on or in connection with the work, have due regard to all local festivals, religious and other customs.

B.8.3 The contractor shall comply with all State and Central Laws, Statutory Rules, Regulations etc., such as : The payment of wages to, The Minimum Wages Act, The Workmen Compensation Act, The Employees Liability Act, The Industrial Dispute Act,The Employees Provident Fund and Miscellaneous Provisions Act 1952, Employees State Insurance Scheme, The Contract Labour (Regulations &Abolition) Act 1970 and other Acts, Rules and Regulations for labour as may be enacted by the Government during the tenure of the contract and having in force or jurisdiction at site. The Contractor shall give to the local Governing Body, Police and other concerned Authorities all such notice as may be required under law.

The contractor should have Provident Fund Code Number and shall ensure compliance of the EPF& MP Act, 1952 by the sub-contractors, if any engaged by the contractor for the said work,

B.8.4 The contractor, as required, will obtain independent license under the Contract Labour (Regulations and Abolition) Act 1970 from the concerned authorities based on the certificate (Form-V) issued by the Principal Employer/Customer.

B.8.5 The Contractor shall pay all taxes, fees, license charges, deposits, duties, tolls, royalty, commissions or other charges which may be Leviable on account of any of his operations connected with this contract. The Contractor is responsible to furnish documentary evidence towards GST Registration of the State wherein the site is located and any other documents as per GST Act which may be required from time to time by BHEL.The contractor should have to get the contract registered immediately after award of works as per rules and regulations of the State Government. The contractor will file regular return as per statute of the State/

Centre and provide all information to BHEL as required for the assessment of the project concerned . In case BHEL is forced to make any of such payments, BHEL shall recover the same from the contractor either from moneys due to him or otherwise as deemed fit.

B.8.6 Arrangements for the periodical visits of inspection agencies such as Electrical Inspector etc. to site, inspection certificates etc. will have to be made by the contractor at his cost. The contractor will also meet all expenses in connection with his welder's qualification/ re-qualification tests etc.

B.8.7 The contractor shall be responsible for provision of health and sanitary arrangements {more particularly described in the Contract Labour (Regulation & Abolition) Act 1970} and safety precautions as may be required for safe and satisfactory execution of the contract.

B.8.8 The Contractor shall be responsible for proper accommodation including adequate medical facilities for the personnel employed by him.

B.8.9 The Contractor shall be responsible for the proper behaviour and observance of all regulations by the staff employed by him.

B.8.10 The contractor shall ensure that no damage is caused to any person/property of other parties working at site. If any such damage is caused, it shall be the responsibility of the contractor to make good the losses or compensate them.

B.8.11 All the properties/equipment/components of BHEL/its customer loaned with or without deposit, to the contractor, shall remain the properties of BHEL/its customer. The contractor shall use such properties for the purpose of execution of this contract. All such properties/equipment/components shall be taken to in good condition unless notified to the contrary by the contractor within 48 Hrs. The Contractor shall return them in good conditions as and when required by BHEL/its customer. In case of non-return, loss, damage repairs etc., the cost thereof, as may be fixed by the Engineer, will be recovered from the contractor.

B.8.12 It shall not be obligatory on the part of BHEL to supply any tools and tackles or materials other than those specifically agreed to be given by BHEL. However, depending upon availability/possibility, BHEL/its customer's equipment and other materials may be made available to the contractor on payment of the hire charges as fixed by them, subject to the conditions laid down by BHEL/its Customer from time to time. Unless paid in advance, such hire and other charges shall be recovered from out of dues to the contractor or Security Deposit in one instalment.

B.8.13 The Contractor shall fully indemnify and keep indemnified BHEL/its customer against all claims of whatsoever nature arising during the course of execution of this contract.

B.8.14 In case the contractor is required to undertake any work outside the scope of this contract, the amount payable shall be as may be mutually agreed upon.

B.8.15 Any delay in completion of works or non-achievement of periodical targets, due to reasons attributable to the contractor, will have to be compensated by the contractor either by increased manpower and resources or by working extra hours or more than one shift at no extra cost to BHEL.

B.8.16 The contractor shall execute the work under the conditions usual to such construction work and in conjunction with numerous other operations at site and proceed in a manner that shall help in the progress of work at site as a whole.

B.8.17 The contractor will be directly responsible for payment of wages to his workmen. A pay roll sheet giving details of all payments made to the workmen duly signed by the contractor's representative should be furnished to BHEL, along with each Running Account Bill. Also, Contractor shall display wages paid by him as per The Minimum Wages Act.

B.8.18 In case of any class of work for which there is no specification laid down in the contract, such work shall be carried out in accordance with the instructions and requirements of the Engineer.

B.8.19 No levy, payment or charges made or imposed shall be impeached by reason of any clerical error or by reason of any mistake in the amount levied, demanded or charged.

B.8.20 No idle labour charges will be admissible in the event of any stoppage of work resulting in the contractor's workmen being rendered idle due to any reason any time.

B.8.21 The contractor shall take all reasonable care to protect the materials and the work till such time the place/equipment has been taken over by BHEL/its customer.

B.8.22 The contractor shall not stop work or abandon the site for whatsoever reason or dispute, excepting for force majeure conditions. All problems/disputes shall be separately discussed and settled without effecting the progress of work. Stoppage or abandonment of work, other than under force majeure conditions, shall be treated as breach of work of contract and dealt with accordingly.

B.8.23 The contractor shall keep the area of work clean and shall remove debris etc. while executing day-to-day work. Upon completion of work, the contractor shall remove from the vicinity of works, all scrap, packing materials, rubbish, unused and other materials and deposit them in places specified by the Engineer. The contractor will also demolish all the hutments, sheds, offices etc. constructed and used by him and shall clean the debris. In the event of his failure to do so, the same will be arranged to be done by the Engineer and the expenses recovered from the contractor.

B.8.24 The contractor shall execute the work in the most substantial and workman like manner in the stipulated time. Accuracy of work and timely execution shall be the essence of this contract. The contractor shall be responsible to ensure that the quality, assembly and workmanship conform to the dimensions and clearance given in the drawings and/or as per instructions of the Engineers.

B.8.25 The contractor shall furnish progress reports on work at regular intervals as required by the Engineer.

B.9.0 **RESPONSIBILITIES OF CONTRACTOR IN RESPECT OF SAFETY OF MEN, EQUIPMENT, MATERIAL & ENVIRONMENT**:

B.9.1 All safety rules and codes applied by BHEL/its customer at site shall be observed by the contractor and his workmen without exception. The contractor shall be responsible for the safety of the equipment/materials and work to be performed by him and shall maintain all lights, fencing guards, signs etc. or other protections necessary for the purpose. Contractor shall also take such additional precautions as may be indicated from time to time by the Engineer, with a view to prevent pilferage, accidents, fire hazards etc. and suitable number of clerical staff, watch and ward, store keepers to take care of equipment, materials and construction tools and tackles shall be posted at site by the contractor till the completion of the work under this contract. The contractor shall arrange for such safety devices as are necessary for this type of work and carry out the requisite site tests of handling equipment, lifting tools, tackles etc. as per usual standards and practices.

B.9.2 The contractor shall provide to its work force and ensure the use of required personal protective equipment as found necessary & as directed by the authorised BHEL officials in line with latest Amendments / Revisions of various Indian Standards.

i) Safety helmets conforming to IS-2925 : 1984.

ii) Safety belts conforming to IS-3521 : 1983.

iii) Safety shoes conforming to IS-1989 : 1978.

iv) Eye and face protection devices conforming to IS-8520 : 1977 and IS-8940 : 1978.

v) Hand and body protection devices conforming to IS-2573 : 1975, IS-6994 : 1973, IS-8807 : 1978 and IS-8519 : 1977.

B.9.3 All tools, tackles, fitting appliances, material handling equipment, scaffolds, cradles, safety nets, ladders, equipment, etc. used by the contractor (as per Annexure 'N') shall be of safe design and construction and maintained in good condition. However BHEL officials shall have the right to ban use of any of them or get them tested at their discretion.

All test & measuring instruments to be pre-calibrated through certifying agency before use. Also, please see. Cl. E.4.2 & E.6.3 of section - E for more details.

All electrical equipment, connections and wiring for construction power, its distribution and use shall conform to the relevant requirements of Indian Electricity Act and Rules. Only electricians licensed by the appropriate statutory authority shall be employed by the contractor to carry out electrical works.

B.9.4 All electrical appliances including portable electric tools used by contractor shall have safe plugging system to source of power and be appropriately earthed.

B.9.5 The contractor shall not use any hand lamp energised by electric power with supply voltage of more than 240 volts. For work in confined spaces, lighting shall be arranged with power source of not more than 240 volts.

B.9.6 Where it becomes necessary to provide and/or store petroleum products, explosives, chemicals and liquid or gaseous fuel or any other substance that may cause fire or explosion, the contractor shall be responsible for carrying out such provision and/or storage in accordance with the rules and regulations laid down in the relevant Government Acts, such as Petroleum Act, Explosive Act, Petroleum and Carbides of Calcium Manual of the Chief Controller of Explosives, Government of India etc. Prior approval of the authorised BHEL official at the site shall also be taken by the contractor in all such matters.

B.9.7 The contractor shall arrange at his cost appropriate illumination as required at all work spots for safe working, when natural day light may not be adequate for clear visibility.

B.9.8 In case of a fatal or disabling injury/accident to any person at construction sites pertaining to this work, the victim and/or his/her dependents shall be compensated by the contractor as per statutory requirements. However, if considered necessary, BHEL shall have the right to impose appropriate financial penalty on the contractor & recover the same from payments due to the contractor for suitably compensating the victim and/or his/her dependents. Before imposing any such penalty, appropriate enquiry shall be held by BHEL giving opportunity to the contractor to present his case.

B.9.9 In case of any damage to property due to lapse by the contractor, BHEL shall have the right to recover the cost of such damages from the payments due to the contractor.

B.9.10 In case of any delay in the completion of a job due to mishaps attributable to lapses by the contractor, BHEL shall have the right to recover cost of such delay

from the payments due to the contractor, after notifying the contractor suitably and giving him opportunity to present his case.

B.9.11 If contractor fails to improve the standards of safety in its operation to the satisfaction of BHEL after being given reasonable opportunity to do so and/or if the contractor fails to take appropriate safety precautions or to provide necessary safety devices and equipment or to carry out instructions regarding

safety issued by the authorised BHEL official, BHEL shall have the right to take the corrective steps at the risk and cost of the contractor after giving appropriate notice indicating the steps that would be taken by BHEL.

B.9.12 The contractor shall submit report of all accidents, fires, property damaged & dangerous occurrences connected with his area of work or caused due to his action/ inaction, to the authorised BHEL official immediately after such occurrence, but in any case not later than 12 hours of the occurrence.

B.9.13 During the course of construction, alteration or repairs scrap lumbers with protruding nails, sharp edges etc. and all other debris including combustibles scrap shall be kept cleared from working areas, passage ways and stairs in and around site.

B.9.14 Cylinders shall be moved by tilting and rolling them on their bottom edges. They shall not be intentionally/ negligently dropped, struck or permitted to strike each

other violently. When cylinders are transported by powered vehicles, they shall be secured in a vertical position.

B.9.15 The contractor shall be responsible for the safe storage of his radioactive sources if same have been permitted to use.

B.9.16 All contractor's supervisory personnel and sufficient number of workmen shall be trained for fire fighting and first aid duties and shall be assigned specific duties. Enough number of such trained personnel must be available during the tenure of the contract.

B.9.17 Contractor shall provide enough fire protecting equipment of the types & numbers at his office, stores, construction/erection site, other temporary structures, labour colony area etc. Access to such fire protection equipment shall be easy and kept open at all times. Compliance of the above requirement under fire protection system at project site shall in no way relieve the contractor of any of his responsibilities & liabilities to fire accident occurring. In the event of fire safety measures being not to BHEL's satisfaction, BHEL shall have option to provide the same and recover the cost plus incidentals from contractor's bills and/or impose penalty as deemed fit by the Engineer.

B.9.18 Before commencing the work, the contractor shall appoint/nominate a responsible officer to supervise implementation of all safety measures and liaison with BHEL Engineer at site.

B.9.19 If safety record of the contractor in execution of the awarded job is to the satisfaction of Safety Department of BHEL, issue of an appropriate certificate to recognise the safety performance of the contractor may be considered by BHEL after completion of the job.

B.10.0 **CONSEQUENCES OF CANCELLATION:**

B.10.1 Whenever BHEL exercises its authority to terminate the contract/withdraw a portion of work, the work may be got completed by any other means at the contractor's risk and cost provided that in the event of the cost of completion (as certified by the Engineer which shall be final and binding on the contractor) being less than the contract value, the advantage shall accrue to BHEL. If the cost of completion exceeds the money due to the Contractor under the Contract, the Contractor shall either pay the excess amount demanded by BHEL or the same shall be recovered from the contractor. This will be in addition to the forfeiture of Security Deposit and recovery of liquidated damages as per relevant clauses.

B.10.2 In case BHEL completes the work under the provisions of this clause, the cost of such completion to be taken into account for determining the excess cost to be charged to the contractor shall consist of cost of materials purchased and/or labour provided by BHEL with an addition of such percentage to cover supervision and establishment charges as may be decided by BHEL.

B.11.0 **INSURANCE:**

B.11.1 BHEL/its customer shall arrange for insuring the project materials/properties of BHEL/its customer covering the risks during transit, storage, construction, erection and commissioning.

B.11.2 It shall be the sole responsibility of the Contractor to insure his workmen against risks of accident and injury while at work as required by the relevant rules and to pay compensation, if any, to them as per Workmen's Compensation Act. The Contractor shall also insure his staff against accidents. The work will be carried out in a protected area and all the rules and regulations of BHEL/its client in the project area which are in force from time to time will have to be followed by the contractor.

B.11.3 If due to negligence and/or non-observance of safety and other precautions any accident/injury occurs to any other person/public, the contractor shall pay necessary compensation and other expenses, if so decided by the appropriate authority.

B.11.4 It shall be the responsibility of the contractor to provide security and insurance claim related information/reports, FIRs etc. for the equipment/material belonging to BHEL/its customer and handed over to the contractor for transportation/erection/ construction till these are taken over by BHEL after erection/construction or are returned to BHEL/its customer's store.

B.11.5 If due to Contractor's carelessness, negligence, non-observance of safety precautions, improper security arrangements or due to non-compliance of paper work needed for lodging insurance claim, damage to BHEL/its Customer's property and/or personnel should occur, and if BHEL is unable to recover its claim from the Insurance Company, the deficit will be recovered from the Contractor. **All losses arising out of theft of material from the contractor's store/erection site shall be recovered from the contractor irrespective of the insurance claims.**

B.12.0 **STRIKES & LOCKOUTS:**

B.12.1 The Contractor will be solely responsible for all disputes & other issues connected with his workmen. In the event of the contractor's workmen resorting to strike or the contractor resorting to lockout and if the strike or the lockout so declared is not settled within a period of one month, BHEL shall have the right to get the work executed by employing its own men or through other agencies or both. The cost incurred by BHEL in this regard shall be recovered from the Contractor.

B.12.2 For any purpose whatsoever, the employees of the contractor shall not be deemed to be in the employment of BHEL/its Customer.

B.13.0 **FORCE MAJEURE:**

B.13.1 The following shall amount to force majeure conditions:-

Acts of God, Act of any Government, war, Sabotage, riots, civil Commotion, Police Action, Revolution, Flood, Fire Cyclone, Earthquake, Epidemic and other similar causes over which the contractor has no control.

B.13.2 If the contractor suffers delay in the due execution of the contract, due to delays caused by force majeure conditions, as defined above, the agreed time of completion of the work covered by this contract may be extended by a reasonable period of time in consultation and after agreement of BHEL's clients / owner, provided that on the occurrence of any such contingency, the Contractor immediately reports to BHEL in writing the causes of delay. The Contractor shall not be eligible for any compensation on this account.

B.14.0 **GUARANTEE:**

B.14.1 Even though the work will be carried under the supervision of BHEL Engineers, the contractor will be responsible for the quality of the workmanship and shall guarantee the work done for a period of 12 months from the date of putting the complete system into commercial operation or 18 months from the date of system is declared completely erected duly tested and accepted by customer whichever is later and shall rectify free of cost all defects due to faulty erection detected during the guarantee period starting from the date of the completion of rectification. In the event of the contractor failing to repair the defective works within the time specified by the Engineer, BHEL may proceed to undertake the repairs of such defective works at the contractor's risk and expense without prejudice to any other rights and recover the same from Security Deposit/other dues.

B.15.0 **ARBITRATION:**

B.15.1

Please refer " Annexure to conditions of contract for ETC Work" attached with the tender documents.

Please refer " Annexure to conditions of contract for ETC Work" attached with the tender documents.

NOTE:

Above clause No. B.15.0 stands deleted. Please refer Annexure to conditions of contract for ETC works.

B.16.0 **VARIATIONS AND VALUATIONS:**

B.16.1 **QUANTITIES:**

The quantities set out in the Bill of Quantities are the estimated quantities of the work but they are not to be taken as the actual and correct quantities of the works to be executed by the Contractor in fulfilment of his obligations under the Contract.

B.16.2 **VARIATIONS:**

B.16.2.1 The Engineer shall have power to make any variation of the form, quantity of the Works or any part thereof that may in his opinion be necessary and for that purpose or if for any other reason it shall in his opinion be desirable shall have power to order the Contractor to do and Contractor shall do any of the following:-

a) Increase or decrease the quantity of any work included in the contract.

b) Omit any such work.

c) Change the character or quality or kind of any such work.

d) Execute additional work of any kind necessary for the completion of the works and no such variation shall in any way vitiate or invalidate the contract but the value (if any) of all such variation shall be taken into account in ascertaining the amount of the Contract Price.

e) Restrict the extent of work of any item covered under Clause E.10.0 of Section - E "Schedule of Equipment".

B.16.2.2 Orders for Variations to be in writing. No such variation shall be made by the contractor without an order in writing of the Engineer provided that, no order in writing shall be required for increase or decrease in the quantity of any work where such increase or decrease is not the result of an order given under this clause but is the result of the quantities exceed in for being less than those stated in the Bill of Quantities. Provided also that if for any reason the Engineer shall consider it desirable to give any such order verbally the Contractor shall comply with such order and any confirmation in writing of such verbal order given by the Engineer whether before or after the carrying out of the order shall be deemed to be an order in writing within the meaning of this clause. Provided further that if the contractor shall confirm in writing to the Engineer any verbal order of the Engineer and such confirmation shall not be contradicted in writing by the Engineer, it shall be deemed to be an order in writing by the Engineer.

B.16.3 **VALUATION OF VARIATIONS:**

The Engineer shall determine the amount (if any) which in his opinion should be added to or deducted from the sum named in the Contract in respect of any extra or additional work done or work omitted by his order. All such work shall be valued at the rates set out in the Contract if in the opinion of the Engineer the same shall be applicable. If the contract shall not contain any rates applicable to the extra or additional work then suitable prices shall be derived from the nearest item of BOQ or arrived at from the actual cost of manpower utilised (the cost of T&P and testing equipment etc. are not to be taken into account for arriving at the rates of additional/extra works) plus 10% for contractor's OH and profit. The rates for manpower shall be as per the minimum wages applicable for the project area.

Above clause No.B.16.3 shall be read in conjunction with clause No.1.of of Annexure to conditions of contract for ETC works.

B.16.4 **POWER OF ENGINEER TO FIX RATES:**

If the nature or amount of any omission or addition relative to the nature or amount of the whole of the contract work or to any part thereof shall be such that in the opinion of the Engineer the rate or price contained in the Contract for any item of the Work is by reason of such omission or addition rendered unreasonable or inapplicable then a suitable rate or price shall be agreed upon between the Engineer and the Contractor. In the event of disagreement the Engineer shall fix such other rate of price as shall in his opinion be reasonable and proper having regard to the circumstances and the same shall be binding on the contractor. But under no circumstance the contractor shall suspend the work on the plea of non-settlement of rates falling under the clause or claim any compensation on that account.

****

ANNEXURE - M

PROGRAMME OF WORK

SL.NO.	ACTIVITY	DURAION
01.	Award of work.	Zero week
02.	Mobilisation & setting up of site office	..... weeks
03.	Start / finish of structure erection	..... weeks
04.	Start / finish of stringing of shielding wire and conductors	..... weeks
05	Start / finish of Circuit Breaker erection	..... weeks
06.	Start / finish of other equipment erection	..... weeks
07.	Start / finish of testing and precommissioning	..... weeks
08.	Start / finish of commissioning	..... weeks
09.	Final Handing over	..... weeks

(SIGNATURE OF TENDERER)
WITH STAMP

ANNEXURE - N

LIST OF TEST EQUIPMENTS TO BE ARRANGED BY ETC CONTRACTOR

All measuring and testing instrument shall be pre-calibrated through a certifying agency before use. The certificate of calibration shall be submitted to BHEL Site Engineer for records. Also see clause E.4.2 & E.6.3 under Section E of the tender specification for more details.

A -	**General purpose**	**Qty.**
1.	Digital multimeter - 4½ digits Accuracy ± 1% (Any reputed make - preferably Fluke - make)	4 Nos.
2.	Megger 2.5 kV - 5kV, range 0.5 MΩ - 10,000 MΩ (Motorised/Electronic) (Any reputed make)	1 No.
3.	Meggar having voltage multiplier 0-500V- 1000V, (Motorised / Electronic) Range 0.5 MΩ - 1000 MΩ (Any reputed make)	1 No.
4.	Single phase variac 8 A, 0.-250V, 50 HZ	2 No
5.	Three phase variac 15A, 0-440V, 50 HZ	1 No
6.	Single phase transformer 220V / 4000V, 500VA, 50HZ	1No
7.	Stop watch	1No
8	Micro- ohm- meter (mV drop test kit) 0-200ADC, 0-2000 micro ohm with suitable calibrated cable leads for current injection and mV drop.	1 No
9.	Phase sequence meter	1 No
10.	Two way intercom set with 50 to 100 M cables for checking of cable continuity	2 sets
11.	Walkie - Talkie sets with battery charging sets Receiver + Transmitter, Type GP 300 - Motorola - make	1 set
12.	Variable D.C. power supply 0-220VDC, 10 A	2 Nos
13.	4 pole Miniature moulded case breaker 16 A	3 No
14.	Capacitance meter having range 20 PF- 100mfd ± 1%	1 No
15.	Isolation Transformer 1KVA, 240V AC, 1 phase, 50Hz	2 Nos

B	**For testing of current transformer**	
1.	Primary injection test kit, range 0-2000A with a pair of leads & C clamps for testing of CT's	1 No
2.	Secondary injection test kit suitable for 5A& 1A with banana plug cable leads.	1 No
3.	Digital Tongue tester 0-2000A, 600VAC, 50 Hz (Any reputed make).	1 No
4	Digital Tongue tester 0-20A, 600V AC, 50 Hz (Any reputed make).	1 No
5.	Digital Tongue Tester, 0-1A, 600V AC, 50Hz	2 Nos.
C -	**For testing of oil cooled transformer and AC reactor**	
1.	Transformer winding resistance meter or Kelvin's double bridge	1 No
2.	Transformer turns ratio meter	1 No
3.	PPM tester for transformer oil	1 No
4.	BDV tester for transformer oil	1 No
D	**For testing of relays**	
	Single phase / 3 phase relay test kit having timer current source 5A, 1A, voltage source 0-220VDC, 0-110 VAC 50 HZ. (Any reputed make)	1set
E-	**For time measurement of breaker**	
	Breaker closing and / opening time measurement timer	1 No
F	**For testing of relays and distance protection**	1 Set
1.	CFB kit or equivalent - of any reputed make	
2.	ZFB kit or equivalent - of any reputed make	

G **For testing of transformer bushings CT, CVT & Circuit Breaker used in HV System**

Capacitance and tan Delta kit suitable for 12KV 1 Set
(Any reputed make)

H. **Safety / protective means**

- Protective earth rod suitable for 220Kv / 400 KV system 2 Nos
  having leakage current meter, 70MM² copper cables and C clamps
  (Any reputed make).
- Helmets and hand globes etc.

I. **For PLCC Equipment:**

b) Digital time interval meter and frequency counter, 8 digits with frequency range 10 Hz to 10MHz.

c) 200Hz to 620KHz Selective level meter.

d) 200Hz to 620KHz Selective level generator.

Note:

1. Above is only a specimen/indicative list and any other test equipment (s) as may be required by Owner / BHEL at site during the execution of work will be arranged by the contractor well in time.
2. The status of tools, plants and instruments mentioned in annexure C of section - A does not relieve the subcontractor of his responsibility to make available all the test equipments and tools & tackles mentioned in annexure N of section B as per requirement of project.

ANNEXURE - P

ACTIVITIES FOR TESTING AND COMMISSIONING BY ETC CONTRACTOR

1. Preparation of joint inspection records / observation by BHEL, BHEL customer and the contractor on the pending activities of erection holding for starting of testing and commissioning.

2. Issue of certificate for completion of erection activities to the satisfaction of BHEL customer.

3. Compilation of documents (scheme, cable schedules, FQP, technical literature, operation and maintenance manuals, technical reports, works test certificate for the equipments / components, and other relevant documents to expedite commissioning) in a systematic manner to present to customer/owner to meet the contractual requirement.

4. To expedite the testing activities contractor has to arrange the engineers and his staff and instruments at site for testing and commissioning of switchyard equipments as follows:

4.1 Testing of individual relay, energy meter, transducer and meters for their satisfactory operation.

4.2 Protection devices / relays will be tested with appropriate current and voltage injections.

4.3 Individual control and protection panels testing for their satisfactory operation as per scheme.

4.4 Individual CT, PT, CVT, Breaker, Transformer and Isolator LA, MB, Battery Charger etc. where ever possible to test them independently.

4.5 Wiring check as per scheme and cable schedule preferably in the following sequences:

- Between marshalling Kiosk in the yard to other yard equipments.
- Between equipments in the yard.
- Yard equipments to control room equipments.
- Inter connection between control room equipments.

5. All cables to be properly glanded, identified and terminated suitably.

6. Cables should have proper / accurate cross reference ferruling and necessary cable tags for identifications as per recommendation by BHEL/ Customer.

7 Green marking in cable schedule and scheme after wiring check. Contractor to make also “As Built” scheme and cable schedule for submission to BHEL/Customer.

8. List of wiring mistakes, component damage and mal-operation of components.

9. Successful completion of equipment level testing operative from local and remote and desired FQP filled up and approved by ultimate customer. Approval/acceptance on FQP results by customer has to be obtained by Contractor. For any technical clarifications, BHEL will only assist.

10. In case the contractor is finding difficulty to understand the technicalities to undertake testing and commissioning of a particular equipment, subsystem and system he has to inform BHEL in advance with in 2 months from the date of award of contract for necessary information and explanation.

11. For erection/commissioning of SF6 Circuit Breakers (If called for in BOQ), the services of experts +for supervision will be extended by BHEL free of cost. Contractor will provide adequate support by providing skilled manpower and tools & tackles**.** However the complete responsibility for erection and commissioning lies with subcontractor.

12. Contractor has to keep a senior and experienced person in the area of testing and commissioning associated with his skilled staff till charging and handing over of complete switchyard to the satisfaction of BHEL customer.

13. Contractor has to be well equipped at site with testing instruments and safety measures (like helmet and hand globes) while doing testing and commissioning.

14. Contractor will also carry out design validation tests as per BHEL / BHEL customer documents.

15 If the contractor fails to take up testing and commissioning work as per the requirement of contract or project requirement, then BHEL will be at liberty to hire services of third agency for this work at the risk and cost of subcontractor.

16 Testing of mandatory spares or any other spare (if required by customer / BHEL), cleaning and handing over to customer's stores is also included in the scope of this Tender Specification. The site Test Reports of these mandatory spares will also be generated by subcontractor in such a case.

17 In case contractor fails to arrange Test equipments as referred in Annexure 'N' (as per requirement of equipment covered in BOQ), BHEL will arrange the instruments at the risk and cost of contractor for providing such instruments.

18. Contractor has to repeat any tests free of cost, even if already conducted, whenever required to prove and check the healthiness of system before power flow, such tests could be primary injection and secondary injection in CT, CVT, meggering, and functional tests or any other tests as required by BHEL/customer.

19. Oil processing/filtering in a transformer, CT and CVT shall also be repeated free of cost if required before charging and handing over of the switchyard to the owner in case BDV and PPM of oil is not satisfactory.

20. As isolator is a rotating equipment and its alignment is likely to get disturbed. Therefore contractor has to do alignment of isolators and measurement of contact resistance repeatedly free of cost as and when required till handing over of the station.

21. Commissioning means charging of total system in a sub-station and inter connected equipments by power flow. Accordingly the payment will be made to the contractor as per payment terms.

22. Contractor has to deploy adequate and experienced man power at site as per project requirement and advice of BHEL site in-charge. Non compliance of this requirement will be treated as indiscipline and non cooperation of the contractor. Accordingly BHEL will hire the man power as required at the risk and cost of the contractor after giving a single notice.

23. Based on site requirement, for the works not stipulated in the contract, the contractor has to provide assistance of skilled manpower with required tools and test instruments.

24 If any Expert services of manufacturer for commissioning supervision of special protection relays / numerical relays / equipment is felt necessary by the contractor, the same shall be arranged by the contractor themselves at their cost. Contractor shall provide testing & Commissioning, Engineer, electrician, other tools tackles and consumables for these equipments and for total system.

Any delay in arranging special testing & commissioning equipment and expert supervisor shall not entitle the contractor to any claim (idle labour, additional time etc.) whatsoever.

25. Any idle days of the expert supervisor at site due to reasons attributable to the contractor, due to lack of readiness in erection, delay in arranging of manpower, tools etc. shall be to contractor's account.

NOTES :-

(1) Above is only an indicative list. Contractor has to mobilise and keep adequate competent commissioning staff at site to ensure that all mile stones & events and relevant commissioning activities are completed successfully in a scheduled time.

(2) In case contractor is not finding competent and adequate staff with him, he can hire the commissioning services from out side agencies approved and accepted by BHEL. Contractor will furnish the details (experience, qualification) of all commissioning staff and the commissioning tools and instruments available with the contractor OR obtained on loan basis with in 60 days from the date of award of the work.

ANNEXURE - Q

LIST OF TOOLS & TACKLES TO BE ARRANGED BY CONTRACTOR

Sl. No.	PARTICULARS
01.	Electrical Drilling Machine & Hand drilling Machine.
02.	Hydraulic Bending Machine for Al. pipes.
03.	Gas Welding Set & Gas Cutting Set.
04.	Hand Operated Winches.
05.	Electric Welding machine.
06.	Jack with axle for lifting Cable Drum.
07.	Jointers Tool Box.
08.	Blow Lamps.
09.	Compression Tools suitable for Cables.
10.	Pull Lifts.
11.	Pulley Blocks.
12.	Hooks/Chains
13.	Cable Rollers.
14.	Hydraulic Jacks - For cable laying.
15.	Aluminium Rollers.
16.	D- Shackles.
17.	Dynamometers.
18.	TIG, Welding machine (for Aluminium welding).
19.	High Vacuum 1000 GPH Oil Filtration Machine for Transformer / Reactor oil suitable for 760mm vacuum. In case 250 MVA / 315 MVA transformer ETC work is covered in the scope, Oil filtration equipment of 1500 GPH suitable for High Vacuum along with 30 kL capacity storage tank for oil storage and processing of oil should be provided.
20.	Hydraulic cranes including accessories (20 tonne or more and boom height of 15mts. Vertical or more) suitable for erection of transformer bushings accessories and other equipments.
21.	Hydraulic Crimping tools for conductor / Shield wire.
22.	Crimping tools for cable termination.
23.	Torque wrenches of different ranges in sufficient numbers.
24.	All general purpose hand tools in sufficient quantities.
25.	Shearing Machine for cutting of Earthing Flat.

26. Tool Kit for fitters.
27. Tool Kit for Electrician.
28. Bench Vice.
29. 'A' type collapsible Al. ladder height 8M.
30. 'H' type Al. ladder height 5M.
31. Pressure Gauge 0-1kg/Sq.cm for measurement of N2 pressure.
32. Vacuum gauges for measuring fire vacuum of less than 1 torr in transformer.
33. Nylon slings for 4T capacity with different lengths.
34. Turper
35. Angle meter for measurement of bushing angle during erection.
36. Nylon hammer.
37. Wedge for cutting of 'O' rings/neoprene gaskets.
38. Die/Drill tool for making holes in gland plates (All sizes in sufficient numbers)
39. Phoenix screw drivers for handling of Terminal Blocks.

IMPORTANT NOTE:

1. The Contractor shall submit the copies of latest test certificate of lifting tackles, slings, pulleys etc. after mobilisation at site to the ENGINEER-IN-CHARGE.
2. Above is only a specimen/indicative list and any other Tools & Tackles as may be required by Owner/ BHEL at site during the execution of work will be arranged by the contractor promptly.
3. The status of tools, plants and instruments mentioned in annexure C of section - A does not relieve the subcontractor of his responsibility to make available all the test equipments and tools & tackles mentioned in the annexures of section B as per requirement of project.

SECTION-C

SPECIAL CONDITIONS OF CONTRACT

SECTION - C

SPECIAL CONDITIONS OF THE CONTRACT

C.1.0 **QUALIFICATION OF THE CONTRACTOR :**

C.1.1 The contractor must have the experience of execution of identical work in the past as specified in the tender documents and must have executed contracts of similar nature. The contractor must furnish enough evidence to establish his capacity in erection, testing and commissioning of similar equipments covered under this specification.

C.1.2 The contractor should be able to obtain clearance from the Electrical Inspector/ State Authorities on completion of the installations. If required, the Contractor is supposed to obtain such clearances on part completion of the installation as required by BHEL / Owner time to time. Also, before the start of work the contractor should obtain the supervisory license from the concerned Electrical Authorities.

C.1.3 The Contractor will have following certificates.

a) Contractor electrical licence.

b) Supervisor competency certificates to deal with Electrical high voltage equipments for their installation and for their installation and testing.

Such certificates from two persons of subcontractors representatives who will be posted at site will be required.

C.1.4 The contractor should be aware of the local conditions and be well acquainted with the site.

C.1.5 The contractor shall be preferred who has worked for State Electricity Boards/BHEL/Steel Authorities/Public Undertakings.

C.1.6 The contractor should have a very good engineering background and capability of carrying out erection and commissioning work of large scale.

C.2.0 **TERMS OF PAYMENT FOR ERECTION, TESTING AND COMMISSIONING :**

C.2.1

C.2.2

C.2.3

Please refer " Annexure to conditions of contract for ETC Work" attached with the tender documents.

C.2.4

C.2.5

C.2.6

C.2.7

Please refer " Annexure to conditions of contract for ETC Work" attached with the tender documents.

C.2.8

Above clause No. C.2.0 stands deleted. Please refer Annexure to conditions of contract for ETC works.

C.3.0 **SECURITY DEPOSIT:**

C.3.1

C.3.2

Please refer " Annexure to conditions of contract for ETC Work" attached with the tender documents.

C.3.3

C.3.4

C.3.5 **RETURN OF SECURITY DEPOSIT:**

The contractor should refer the clause A.17.7.

No interest shall be payable by BHEL on Earnest Money/Security Deposit or on any money due to the contractor by BHEL.

C.4.0 **PERFORMANCE GUARANTEE:**

C.4.1 The contractor shall be responsible for any defects in the execution of work noticed in guarantee period of 12 months reckoned from the date of putting the complete system into commercial operation/handing over to customer or 18 months from the date of system is declared completely erected, duly tested and accepted by BHEL and customer. The Contractor shall submit a bank guarantee worth 10% of the total contract value of erection, testing and commissioning of equipment in the prescribed proforma form of BHEL. If the contract is for more than one sub-station and the substations are completed and taken over by customer in stages, then the performance BG for the substation completed and handed over may be submitted based on the contract value of individual substation at the time of submitting the final bill, substation wise.

C.5.0 **LD/PENALTY FOR DELAY IN EXECUTION:**

C.5.1

Please refer " Annexure to conditions of contract for ETC Work" attached with the tender documents.

Above clause No.C.5.0stands deleted. Please refer Annexure to conditions of contract for ETC works.

C.6.0 **RECEIPT/ UNLOADING, HANDLING, TRANSPORTATION, SECURITY AND PRESERVATION OF EQUIPMENT AT SITE:**

C.6.1 The contractor shall take the delivery of all the equipment, structures and materials etc. at site and their security shall be the responsibility of the contractor. Further transportation of materials to work place as per requirements will be in the scope of the contractor. For any delay, demurrage/wharfage/detention charges will be borne by the contractor.

In order to ensure timely completion of project, some of the equipment/material as covered under clause no. E.10.0 of Section-E (Schedule of equipment) may arrive at site and are unloaded and stacked/stored prior to mobilisation of ETC Contractor for the work covered under this Tender Specification. In such a case, the amount actually spent by BHEL on unloading and storage till the time of mobilisation by the ETC contractor shall be debited to their account. Immediately after mobilisation, the contractor shall take these into their custody and all the conditions as applicable for the material directly received by the contractor will be applicable for these material.

C.7.0 **FACILITIES TO BE PROVIDED AT SITE BY THE CONTRACTOR:**

C.7.1 Watch and ward by authorised/licensed agency for the safe custody of the equipment shall be responsibility of the contractor.

C.7.2 It is the responsibility of the contractor to dismantle and take away all the materials of his office accommodation as soon as the project in handed over to BHEL/Owner and clean the area off debris.

C.8.0 **TESTING AND COMMISSIONING:**

C.8.1 All the electrical/mechanical test of the materials and equipment will be arranged by the contractor as per standard Specification/Field Quality Plan/ Erection Manual/Directive of the Site Engineer and Owner. The contractor shall have to fill the check list (site inspection record forms)for receipt, storage, erection, testing and commissioning of all the equipments as per BHEL systems to ensure proper quality of work.

C.8.2 All the testing equipment required to carry out the site test for all the equipment or the erected equipment shall be calibrated and shall be arranged by the contractor at his own cost. However, necessary instruction and the guidelines will be given by BHEL/owner.

In case Contractor is unable to provide the calibrated measuring and test instruments to the satisfaction of 'ENGINEER' then as per his own wisdom/ judgement can recommend a deduction of maximum limit up to 5% from the Contractor's bill. But this in no way relieves the Contractor from arranging the test & measuring instruments / equipment as required for completion of the 'PROJECT' without affecting the quality of work and meeting any Contractual obligation whatsoever.

C.8.3 The contractor shall be completely responsible for the satisfactory erection and providing Test Equipment and skilled manpower for testing, commissioning of all equipment, not withstanding the fact that he may be assisted by BHEL or its authorised representative.

C.8.4 The installation of all electrical equipment shall be carried out only by an electrical contractor holding a valid License for carrying out installation work of the voltage classes involved, under the direct supervision of and by persons holding valid certificates of competency for the same voltage classes, issued or recognised by the State Government. Contractor shall submit the particulars of the License held by him.

C.8.5 The contractor shall furnish to BHEL the names and particulars of certificates of competency of the supervisors and workmen to be engaged for carrying out installation work against this specifications.

C.8.6 The work shall be executed in a workman like manner in accordance with the requirements specified in the General Specification of Electrical Equipment installation, testing and commissioning specifications. Copy of such specifications/ drawings will be given to successful bidder before starting the work.

C.8.7 All electrical work shall also comply with standard norms and practices adopted by the State Electricity Board. Site test reports shall be prepared and submitted by the contractor.

C.8.8 Before charging the installation in part or full, this shall have to be approved by Statutory Govt. Authorities like Electrical Inspector, other concerned agency and the contractor has to arrange approval for the same as and when required by BHEL/Owner.

C.8.9 Any feasible modification in the equipment or installation that may be demanded by Electrical Inspector shall have to be carried out by the contractor at no extra charges to BHEL. The contractor shall take all necessary steps to enable BHEL/Owner to get the installation approved by the above authorities & shall render all necessary assistance to BHEL/Owner in the matter.

C.9.0 **COMPLETION OF CONTRACT:**

C.9.1 All equipment, mountings, fittings accessories or apparatus which may not have been specifically mentioned but which are usual or necessary for completing the erection and commissioning work of system, shall be done by the contractor without any extra charges.

C.10.0 **TRIAL OPERATION AND HANDING OVER:**

C.10.1 On completion of erection of the equipment and before pre-commissioning tests of the equipment, each of the equipment shall be inspected by the BHEL/Owner for the correctness and completeness of the installation. Thereafter commissioning engineers shall carry out all pre-commissioning tests. The results of such pre-commissioning tests shall be signed jointly by the contractor`s representative and BHEL/Owner.

C.10.2 On conclusion of satisfactory pre-commissioning tests, the trial operation of the equipments shall start. The equipment shall be on trial operations during which period all necessary adjustments shall be made.

C.10.3 After completion of trial operation, the plant will be handed over to the owner, after the period to be specified by BHEL. On taking over the plant, the owner shall issue a certificate to that effect.

C.10.4 BHEL/Owner shall be at liberty from time to time or at any time before the completion of the works to take possession and use any part of the completed works and in such case the contractor shall completely finish the said uncompleted part or parts of the works as and when the engineer shall direct whether before or after the respective prescribed time or extended time (if any) for the completion of the works and if required by the engineer while the owner is in possession of the said part or parts, of the site or works.

C.10.5 If due to reason of any default on the part of Contractor, a taking over certificate has not been issued in respect of any portion of the works, within one month after the time for completion or extended time as the case may be, the Owner/BHEL shall be at liberty to use the works or any portion thereof in respect of which a taking over certificate has not been issued, provided that the works or the portion so used as aforesaid shall be reasonably capable of being used and that the Contractor shall be afforded the earliest opportunity of taking such steps as may be necessary to permit the issue of the taking over certificate.

C.11.0 **ADDITIONAL EXPENDITURE:**

In case any additional expenditure is incurred in the works arising out of the faulty execution of the works by the contractor, such additional expenditure shall be borne by the contractor.

C.12.0 **SPLITTING THE WORK:**

BHEL reserves the right to split the work and award any part of the work to any agency without assigning any reason whatsoever.

C.13.0 **SUPPLY OF MATERIAL:**

C.13.1 The Contractor shall in no case be entitled to any compensation or damage on account of any delay in supply or non- supply there of for all or any such materials and stores but the contractor shall be entitled to suitable extension of time as may be determined by the Engineer whose decision shall be final and binding.

C.13.2 The contractor shall satisfy himself of the quantity and quality of the materials at the time of taking delivery from the BHEL/Owner. No claim whatsoever will be entertained by the BHEL/Owner on account of quality or quantity after the materials are taken by the contractor from the BHEL/Owner.

C.14.0 **ELECTRICITY AND WATER:**

C.14.1 Electricity for construction work shall be provided at one point on chargeable basis at the rate prevailing at the time of drawal of power, unless specified otherwise. The contractor shall have to make their own arrangements, at their cost, for distribution to various locations for their works including proper switch/fuse units, distribution boards, cables, poles etc. to ensure safety of men and equipment. Where required the contractor shall employ diesel operative equipment in addition to electric operated ones to ensure timely completion of work.

In case BHEL is unable to provide Electricity on chargeable basis then the contractor has to arrange same at his end.

C.14.2 The contractor shall indicate in his offer the power load required by him along with the load details for which power is required.

C.14.3 The owner shall not be responsible for any inconvenience caused due to any failure of lighting and power supply and no compensation for delay in works can be claimed by the contractor due to such non-supply on the grounds of idle labour, machinery or any other grounds.

C.14.4 The contractor should ensure that the work in critical areas is not held up in the event of lighting and power breakdown and for the same he should have some standby arrangement at his cost. In the event of breakdown in the electric supply, if the progress of work is hampered, it will be the responsibility of the contractor to step up the progress after restoration of electric supply so that over all progress of work is not affected. The contractor shall make proper arrangement of illumination at work place while working in late hours or in darkness.

C.14.5 Unless stated otherwise in the scope of works, the contractor shall make his own adequate arrangement for procuring clear water to be used in the works.

C.15.0 **INSURANCE :**

C.15.1 Contractor shall take insurance cover(s) to cover his Tools and Plants, Assets, workmen compensation and third party liability. The contractor shall make available the original insurance cover(s) to the Engineer for necessary verification before commencement of work.

C.16.0 **ESCALATION/PRICE VARIATION :**

C.16.1 Under this contract, **No escalation/ Price variation** is allowed. The quoted prices are FIRM till complete commissioning and handing over of the Project to Customer/Owner.

C.17.0 **OVERRUN CHARGES:**

C.17.1 Above clause No.C-17.0 stands deleted. Please refer Annexure to conditions of contract for ETC works.

C.18.0 **CONSTRUCTION SCHEDULE:**

C.18.1 While submitting the offer the contractor shall furnish Bar Chart detailing out all major activities, as to how he proposes to complete the work maintaining the completion schedule as given in Notice Inviting Tender. If the contractor fails to achieve any milestone indicated in the Bar Chart/completion schedule mentioned elsewhere, the contractor shall be levied penalty as per clause C.5.0.

C.19.0 **HEAVY MATERIAL HANDLING EQUIPMENT:**

The contractor must clearly indicate the details of all Heavy Materials Handling Equipment owned by him in Annexure-C of Section-A, General Instructions to the Tenderer. The boom length, capacity of handling load and other relevant details must also be given.

C.20.0 **CALIBRATED TEST INSTRUMENTS:**

Contractor is required to bring all the required testing equipments and instruments for conducting pre-commissioning test. All instruments should be calibrated as this is an ISO System requirement and the contractor should furnish test certificate for calibration. Also, please see clause E.4.2 and E.6.3 of Section-E for more details.

C.21.0 Contractor should maintain moisture free store.

C.21.1 Illumination system in & around store should be maintained by the contractor.

C.21.2 All the material stored in the open yard shall be covered by tarpaulins to be arranged by the contractor.

C.22.0 **PROTECTION OF WORK :**

C.22.1 Contractor shall effectively protect his work, equipment, material from theft, damage or tempering at his own expenses till the work is finally taken over by the BHEL/Owner.

C.22.2 Finished work where required, shall be suitably covered to keep it clean and free from defacement or damage.

C.22.3 Necessary fire protection arrangement is to be made by the contractor for store and place of work.

C.23.0 **SAFETY MEASURES :**

C.23.1 All safety rules and codes as applicable to work shall be followed without exception.

C.23.2 All safety appliances and protective devices including safety belt, hand gloves, aprons, helmets, shield goggles etc. shall be provided by the contractor to his personnel. Also, the Contractor must follow BHEL Quality system to ensure safety in all activities of site work.

C.24.0 **QUALITY RECORDS (FQPs, MATERIAL MANAGEMENT ETC.)**

C.24.1 Contractor should follow field quality plan furnished by BHEL to ensure quality in all activities of work performed at site.

C.24.2 The contractor shall have to maintain records pertaining to Material Verification on receipt at site as well as Daily Receipt Register, Stock Register as per the various quality systems of BHEL.

C.25.0 The contractor shall remove all scaffolding, ladders, temporary structures etc. erected by him during erection in order to leave place neat and clean to the satisfaction of the owner.

C.26.0 All packing/items are to be checked immediately on receipt at site. Any shortages, damages are to be reported to BHEL within a week's time in writing.

C.26.1 All parts shall be thoroughly cleaned, all rust removed and surface polished as required before erection of any equipment.

C.26.2 Cleaned and polished parts shall be coated with anti-corrosive paints wherever necessary.

C.27.0 After completion of work, reconciliation is to be done for all the material issued to the contractor. Balance materials are to be returned to BHEL/Owner.

C.28.0 **WORKING HOURS:**

If in the opinion of BHEL, the progress of the erection work by the contractor at any stage needs expediting so as to ensure completion of work within stipulated time, BHEL shall have the right to instruct the Contractor to increase the Contractor's manpower and working hours and the contractor shall comply with such instructions without any Extra Charges.

C.29.0 **DIVISION OF WORK:**

Prices are to be quoted for schedule of Equipment - E.10.0 of Section-E. Work can be split-up and awarded to more than one contractor as per requirement of BHEL/Owner for timely completion of Project.

C.30.0 **INCOME TAX / SALES TAX / WORKS TAX/VAT**

Please refer " Annexure to conditions of contract for ETC Work" attached with the tender documents.

Above clause No.C-30.0 stands deleted.Please refer Annexure to conditions of contract for ETC works.

C.31.0 **DISCREPANCIES AND ADJUSTMENT OF ERRORS**

C.31.1 The several documents forming the contract are to be taken as mutually explanatory of one another, detailed drawings being followed in preference to small scale drawings & figures dimensions in preference to scale & special conditions in preference to general conditions.

C.31.2 In case of discrepancies between schedule of quantities, the specification and/or the drawings the following order of preference shall be observed.

a) Description in Schedule of Quantities.
b) Special Conditions.
c) Drawings
d) Technical Specifications.
e) General Conditions of Contract.

C.31.3 If there are varying or conflicting provisions made in any one document forming part of the contract, the Engineer shall be deciding authority with regard to the document.

C.31.4 Any error in the description, quantity in schedule of quantities or any omission there from shall not vitiate the contract or release the contractor from the execution of the whole or any part of the works comprised therein according to the drawings and specifications or from any of his obligations under the contract.

C.31.5 If on check there are found to be differences between the rates given by the contractor in words and figures or in the amount worked out by him in the schedule of quantities and general summary, the same shall be adjusted in accordance with the following rules. :

a) In the event of discrepancies between description in words and figures quoted by tenderer, the description in words shall prevail.

b) In event of an error occurring in the amount column of schedule of quantities as a result of wrong extension of the unit rate and the quantity, the unit rate shall be regarded as firm and extension shall be amended on the basis of the rates.

c) All errors in totalling in the amount column and in carrying forward totals shall be corrected.

d) The totals of sections of bill of quantities amended shall be carried over to the general summary and the tendered sum amended accordingly. The tendered sum so altered shall, for the purpose of tender be substituted for the sum originally tendered and considered for acceptance instead of the original sum quoted by the tenderer. Any rounding of quantities or in sections of bill of quantities or in general summary, by the tenderer, shall be ignored.

C.31.6 If neither drawings nor specifications contain any mention of minor details of construction which in the opinion of the Engineer, whose decision shall be final and conclusive, are reasonable and obviously and fairly intended for satisfactory completion of work, such details shall be provided by the contractor without any extra cost, as if they were specially mentioned and shall be deemed to be included in the contract.

****

SECTION-D

ERECTION CONDITIONS OF CONTRACT

SECTION - D

ERECTION CONDITIONS OF CONTRACT

D.1.0 **GENERAL:**

D.1.1 The following shall supplement the conditions already contained in the other parts of these specifications and documents and shall govern that portion of the work of this contract to be performed at site.

D.1.2 The contractor upon signing of the contract shall, in addition to a Project Coordinator, nominate another responsible officer as his representative at site suitably designated for the purposes of overall responsibility and co-ordination of the works to be performed at site. Such person shall function from the site office of the contractor during the pendency of the contract.

D.2.0 **REGULATION OF LOCAL AUTHORITIES AND STATUTES:**

D.2.1 The contractor shall comply with all the rules and regulations of local authorities during the performances of his field activities. He shall also comply with the **Minimum Wages Act, 1948 and the Payment of Wages Act** (Both of Government of India) and the rules made there under in respect of any employee or workman employed or engaged by him or his sub-contractor.

The Contractor should note that all instructions of Engineer shall be binding for example display of Minimum Wages paid to the workmen, construction of toilets etc. in the vicinity of working area from health and sanitation standpoint etc.

D.2.2 All registration and statutory inspection fees, if any in respect of his work pursuant to this contract shall be to the account of the contractor. However any registration, statutory inspection fees lawfully payable under the provision of the statutory laws and it's amendments from time to time during erection in respect of the plant equipment ultimately to be owned by the Owner/BHEL shall be to the account of the Owner/BHEL. Should any such inspection or registration need to be rearranged due to the fault of the Contractor or his sub-contractor, the additional fees for such inspection and/or registration shall be borne by the contractor.

D.3.0 **OWNER'S LIEN ON EQUIPMENT :**

The owner/ BHEL shall have lien on all equipments including those of the contractor brought to the site for the purposes of erection, testing and commissioning of the plants. The Owner/ BHEL shall continue to hold the lien on all such equipments through out the period of contract. No material brought to the site shall be removed from the site by the contractor and/ or his Sub-contractors without the prior written permission of BHEL.

D.4.0 **RE-WORKS ETC. :**

In case Owner/BHEL/consultant during inspection at site rejects an item already agreed and the same is agreed to by BHEL and any re-execution of works of other contractors and/or his agencies, which might have got damaged or affected by the replacements will have to be attended to by the contractor free of cost.

D.5.0 ACCESS TO SITE AND WORKS ON SITE :

D.5.1 Suitable access to and possession of the site shall be provided to the contractor by Owner/ BHEL in reasonable time.

D.5.2 The works so far as it is carried out on the owner's premises shall be carried out at such time as the owner/BHEL may approve and the Owner/ BHEL shall give the contractor reasonable help/ facility for carrying out the works.

D.5.3 In the executions of the works, no persons other than the Contractor or his duly appointed representative, Sub- contractor and workmen shall be allowed to do work on the site except by the special permission in writing by BHEL.

D.6.0 **CONTRACTOR'S SITE OFFICE ESTABLISHMENT:**

The contractor shall establish site office at the site and keep posted an authorised representative for the purpose of contract. Any written order or instruction of BHEL or his duly authorised representative shall be communicated to the contractor at the site office and the same shall deemed to have been communicated to the contractor at his legal address.

D.7.0 **CO-OPERATION WITH OTHER CONTRACTORS:**

D.7.1 The contractor shall co-operate with all other contractors or tradesmen of the owner/BHEL who may be performing other works on behalf of them and the workmen who may be employed by the owner/BHEL doing work in the vicinity of the works under the contract. The contractor shall also arrange to perform his work as to minimise to the maximum extent possible interference with the work of other contractors and his workmen. Any injury or damage that may be sustained to the employees of the other contractors, BHEL and the owner due to the contractor's work shall promptly be made good at contractors own expenses. The owner/ BHEL shall determine the resolution of any difference or conflict that may arise between the contractor and other contractor's or between the contractor and workmen of the owner and BHEL in regard to their work. If the works of the contractor is delayed because of any acts or omission of another contractor, the contractor shall have no claim against the owner/ BHEL on that account other than an extension of time for completing his works.

D.7.2 BHEL shall be notified promptly by the contractor of any defects in the other contractor's works that could affect to the contractor's works. The owner/BHEL shall determine the corrective measures if any, required to rectify this situation which shall be binding on the contractor.

D.8.0 **DISCIPLINE OF WORKMEN:**

D.8.1 The contractor shall adhere to the disciplinary procedure set by the owner in respect of his employees & workman at site. The owner/BHEL shall be at liberty to object to the presence of any representatives or employee of the contractor at the site, if in the opinion of the owner/ BHEL such employee has misconducted himself or be incompetent or negligent or otherwise undesirable and then the contractor shall remove such a person objected to and provide in his place a competent replacement.

D.9.0 **CONTRACTOR'S FIELD OPERATION:**

D.9.1 The contractor shall keep informed in advance regarding his field activity plans & schedule for carrying out such part of the works. Any review of such plan or schedule or method of work by the BHEL shall not relieve the contractor of any of his responsibilities towards the field activities and its schedule. Such reviews shall also not be considered as an assumption of any risk or liability by the owner/BHEL or consultant or any of his representatives and no claim of the contractor will be entertained because of the failure or inefficiency of any such plan or schedule or method or work reviewed. The contractor shall be solely responsible for the safety adequacy and efficiency of plant and equipments and his erection methods.

D.9.2 The contractor shall be completely responsible for the conditions of the work-site including the safety of all persons employed by him or his sub-contractor and all the properties under his custody during the performance of the work. This requirements shall apply continuously till the completion of contract and shall not be limited to normal working hours.

D.10.0 **PHOTOGRAPH AND PROGRESS REPORT:**

D.10.1 The Contractor shall furnish to BHEL photographs of the progress of work / work done at site. Photographs shall be taken as & when indicated by BHEL representative. Photograph shall be adequate in size & number to indicate various stages of erection. Each photograph shall contain the date, the name of the Contractor and the title of the Photograph. The cost of photographs is to be born by the Contractor.

D.10.2 The above Photographs along with the soft copy (on floppy/CD) shall accompany the monthly progress report detailing out the progress achieved on all erection activities as compared to the schedules. The report shall also indicate the reasons for the variance between the scheduled and actual progress and action proposed for corrective measures wherever necessary.

D.11.0 **MANPOWER REPORT:**

D.11.1 The Contractor shall submit to BHEL from the first working day of every month, a Manpower report of the previous month detailing the number of persons scheduled to have been employed and actually employed skill-wise and the areas of employment of such labour.

D.12.0 **PROTECTION OF WORK:**

The Contractor shall have total responsibility for protecting his works till it is finally taken over by the owner. No claim will be entertained by the BHEL for damage or loss to the Contractor's works & the contractor shall be responsible for the complete restoration of the damaged work to its original condition to comply with the specification & drawings. Should any such damage to the Contractor's works occur because of other party not under him directly, & if disagreement or

conflict or dispute develops between the contractor & the other party or parties concerns works the same will be resolved as per the provisions of the clause D.7.0 above entitled cooperation with other contractors. The contractor shall not cause any delay in the repair of such damaged works because of any delay in the resolution of such dispute. The contractor shall proceed to repair the work immediately & no cause thereof will be assigned pending resolution of such dispute.

D.13.0 **EMPLOYMENT OF LABOUR:**

D.13.1 The Contractor will be expected to employ on the work only his regular skilled employees with experience of his particular work. No female labour shall be employed after darkness. No person below the age of eighteen years shall be employed.

D.13.2 All travelling expenses including provision of all necessary transport to and fro for Site, lodging allowance and other payments to be Contractor's employees shall be the sole responsibility of the contractor.

D.13.3 The hours of work on the Site shall be decided by the owner/BHEL and the Contractor shall adhere to it. Working hours will normally be eight (8) hours per day Monday through Saturday or depending upon the situation/ requirement.

D.13.4 Contractor's employees shall wear identification badges while on the work at site.

D.13.5 In the case of owner/BHEL become liable to pay any wages or dues to the labour or to any Government agency under any of the provisions of the Minimum Wages Act, Workmen Compensation Act, Contractor Labour Regulation Abolition Act or any other law due to act or omission of the Contractor, BHEL may make such payment and recover the same from the Contractor's bills or from any amount which is already under process of payment to the Contractor.

D.14.0 **FACILITIES TO BE PROVIDED BY OWNER:**

D.14.1 Space: The Contractor shall advice BHEL within Fifteen (15) days from the date of acceptance of the Letter of Intent about his exact requirement of space for his office, storage area. The above requirements shall be reviewed by the Owner/BHEL & space will be allotted to the Contractor for construction of his temporary structures like office and storage sheds.

D.14.2 Construction water and power (Electricity) (Refer Clause C.14.0).

D.15.0 **FACILITIES TO BE PROVIDED BY THE CONTRACTOR:**

D.15.1 **CONSTRUCTION EQUIPMENTS, TOOLS, TACKLES AND SCAFFOLDINGS:**

The Contractor shall provide all the construction equipments, tools, tackles and scaffoldings required for pre-assembly, erection, testing and commissioning of the equipments covered under the contract. He shall submit a list of all such materials to the BHEL before the commencement of work at Site. These tools and tackles shall not be removed from site without the written permission of the owner/BHEL.

D.15.2 **COMMUNICATION:**

The Contractor will make his own arrangement for all his communication needs such as telephone, fax etc., at his site office and his residential accommodation.

D.15.3 **FIRST AID:**

The Contractor shall provide necessary first aid facilities for all the employees, representatives and workmen working at the Site. Enough number of contractor's personnel shall be trained in administering first aid.

D.15.4 **CLEANLINESS:**

D.15.4.1 The Contractor shall be responsible for keeping the entire area allotted to him clean and free from rubbish, debris, etc. during the period of contract. The Contractor shall employ enough number of special personnel to thoroughly clean his work-area at least once in a day. All such rubbish and scrap material shall be stacked or disposed in a place to be identified by the owner/BHEL. Materials and stores shall be so arranged to permit easy cleaning of the area. In areas where equipment might drip oil and cause damage to the floor surface, a suitable protective cover of the flame resistant, oil proof shield shall be provided to protect the floor from such damage.

D.15.4.2 Similarly the labour colony, the office & the residential areas of the Contractor's employees and workmen shall be kept clean & neat to the entire satisfaction of the Owner/BHEL. Proper sanitation arrangements shall be provided by the contractor in the workmen areas, office and residential areas of the contractor.

D.16.0 **LINES AND GRADES:**

All the works shall be performed to the lines, grades and elevations indicated on the drawings. The Contractor shall be responsible to locate the layout of the works. Basic horizontal and vertical control points as required will be established & marked by the Owner/BHEL at Site at suitable points.

These points shall be used as datum for the works under the contractor. The contractor shall inform the Engineer well in advance of the time and places at which he wishes to do work in the area allotted to him, so that suitable datum points may be established and checked by Owner/BHEL to enable the contractor to proceed with his works. Any work done without being properly located may be removed and/or dismantled by the Owner/BHEL at Contractor's expenses.

D.17.0 **FIRE PROTECTION:**

D.17.1 The work procedures that are to be used during erection shall be those which minimise fire hazards to the extent practicable. Combustible materials, combustible waste and rubbish shall be collected and removed from the site at least once each day. Fuels, oils and volatile or flammable materials shall be stored away from the construction and equipments and material storage and areas in safe containers. Untreated canvas paper, plastic or other flammable materials shall not at all be used at site for any other purpose unless otherwise specified, if any such materials are received with the equipment at the Site, the same shall be removed and replaced with acceptable materials before moving in to the construction area or storage.

D.17.2 Similarly corrugated paper fabricated cartons etc., will not be permitted in the construction area either for storage or for handling of materials. All such materials used shall be of water proof and flame resistance type. All other materials such as working drawings, plants etc. which are combustible but are essential for the works to be executed shall be protected against combustion resulting from welding sparks, cutting flames and other similar fire sources.

D.17.3 All the contractors supervisory personnel and sufficient number of workers shall be trained for fire-fighting and assigned specific fire protection duties. Enough of such trained personnel must be available at the Site during the entire period of the Contract.

D.17.4 The contractor shall provide enough fire protection equipment of the types and number for the ware-houses, office, temporary structures, labour colony area etc., access to such fire protection equipment shall be easy and kept all times.

D.18.0 **SECURITY:**

The Contractor shall have total responsibility for all equipments & materials in his custody stored, loose, semi assembled and/or erected by him at site. The contractor shall make suitable security arrangements including employment of security personnel to ensure the protection of all materials, equipments and works from theft, fire, pilferage & other damages and losses. All materials belonging to the Contractors shall enter and leave the project site only with the written permission of the Owner/BHEL in the prescribed manner.

D.19.0 **CONTRACTOR'S AREA LIMITS:**

The Owner will make out the boundary limits of access roads, parking spaces, storage and construction areas for the contractor and the contractor shall not trespass the areas not so marked out for him. The contractor shall be responsible to ensure that none of his personnel move out the areas marked out for his operations. In case of such a need for the contractor's personnel to work in the areas not marked out for him, the same shall done only with written permission of the Owner/BHEL.

D.20.0 **CONTRACTOR'S COOPERATION WITH THE OWNER/ BHEL:**

In cases where the performances of the erection work by the contractor affects the operation of the system facilities of the Owner/BHEL such erection work of the contractor shall be scheduled to be performed only in the manner stipulated by the Owner/BHEL and the same shall be acceptable at all times to the contractor. The Owner/BHEL may impose such restriction on the facilities provided to the contractor such as electricity, water etc., as he may think fit in the interest of the Owner/BHEL and the contractor shall strictly adhere to such restrictions and cooperate with the Owner/BHEL. It will be responsibility of the contractor to provide all necessary temporary instrumentation and other measuring devices required during start up and operation of the equipment system which are erected by him. The contractor shall also be responsible for flushing and initial filling of all the oil and lubricant required for the equipment furnished and erected by him, so as to make such equipments ready for operation. The contractor shall be responsible for supplying such flushing oil & other lubricants unless otherwise specified elsewhere in these documents and specifications.

D.21.0 **PRE-COMMISSIONING TRIALS AND INITIAL OPERATIONS:**

The pre-commissioning trials and initial operations of the equipments furnished and erected by the contractor shall be the responsibility of the contractor as detailed in relevant clauses. The contractor shall provide in addition, test instruments calibrating devices etc. and the labour required for the successful performance of these trials. If it is anticipated that the above test may prolong for a long time, the Contractor's workmen required for the above test shall always be present at site during such trials.

D.22.0 **MATERIAL HANDLING AND STORAGE:**

D.22.1 All the equipments furnished under this contract arriving at site shall be promptly received, unloaded, transported and stored in the storage spaces by the contractor.

D.22.2 Contractor shall be responsible for examining all the shipments immediately on receipt at site and notify BHEL immediately if any damage, shortage, discrepancy. Filling of material verification reports on receipt of materials shall be carried out by the Contractor as per the instructions of Engineer. For any shortages or damages in transit, handling and/or in storage and erection of the equipments at site shall be intimated to BHEL/ equipment supplier promptly to enable them lodge claim with the underwriters. Any financial and/or time loss happened due to contractor's negligence in this regard shall be to the account of the contractor. Any demmurrage, wharfage and any other charges claimed by the Transporter or Railways due to any reason attributable to the contractor such as delay in taking delivery in time shall also be to the account of the contractor.

D.22.3 The Contractor shall maintain an accurate and exhaustive record detailing out the list of all equipments received and keep such record open for the inspection of the Owner/BHEL at any time.

BHEL is an ISO Company and the contractor shall extend all help in maintaining records of receipts, issue and stock in line with Material Management System issued by BHEL. Also, he shall assist in periodic inspection of equipment/materials in stores as per this system.

The Contactor shall carryout all field activities related with ETC work as per Field Quality Plans (FQPs) provided by Engineer to ensure Quality of work at site as well as meet the contractual obligation to BHEL/Owner.

D.22.4 All equipments shall be handled very carefully to prevent any damage or loss. No bare wire ropes, slings etc. shall be used for unloading and/or handling of the equipments without the specified written permission of BHEL. The equipment stores shall be properly protected to prevent damage either to the equipment or to the floor where they are stored. The equipment from the store shall be moved to the actual location at the appropriate time so as to avoid damage of such equipment at site.

D.22.5 All electrical panels, control gears, motors and such other devices shall be properly dried by heating before they are installed and energised. Motor bearings, slip rings, commutators and other exposed parts shall be protected against moisture ingress and corrosion during storage and periodically inspected. Heavy rotation parts if any, in assembled conditions shall be periodically rotated to prevent corrosion due to prolonged storage.

D.22.6 All the electrical equipment, such as motors, transformers etc. shall be tested for insulation resistance at least once in three months from the date of receipt till the date of commissioning and record for such measured insulation values maintained by the contractor. Such records shall be open for inspection by the Owner/BHEL.

D.22.7 The contractor shall ensure that all the packing materials and protection devices used for the various equipments during transit and storage are removed before the equipments are installed.

D.22.8 The consumable and other supplies likely to deteriorate due to storage must be thoroughly protected and stored in a suitable manner to prevent damage or deterioration in quality by storage.

D.22.9 All the materials stored in the open or dusty location must be covered with suitable weather proof & flame proof covering materials wherever applicable.

D.22.10 If the materials belonging to the contractor are stored in areas other than these earmarked for him, the Owner/BHEL will have the right to get it removed to the area earmarked for the contractor at the contractor's cost.

D.22.12 **STORAGE INSTRUCTION FOR GAS FILLED EQUIPMENTS:**

D.22.12.1 All transformers despatched to site are fitted with Nitrogen cylinder in the tank to maintain positive pressure. It will be the responsibility of the contractor to maintain the pressure and replace the empty Nitrogen cylinder with Nitrogen filled cylinder of required purity at his own cost whenever such cylinders are become empty. Contractor should also maintain the periodic record of the pressure of Nitrogen in the transformer in a register for this purpose.

D.22.12.2 For all other gas filled equipments, like CTs, VTs, CVTs etc. the contractor should also maintain the gas pressure & if it falls below the required value, contractor should refill the leaked gas of required purity at his own cost.

D.23.0 **CONSTRUCTION AND ARRANGEMENTS:**

D.23.1 The field activities of the contractors working at site, will be coordinated by BHEL and BHEL decision shall be final in resolving any dispute or conflicts between the contractor and other contractor's and tradesmen of the BHEL regarding scheduling and coordination of work. Such decisions shall not be cause for extra compensation for time to the contractor.

D.23.2 The Owner/Consultant shall hold weekly meetings of all the contractors working at the site at a time and a place so designated. The contractor along with BHEL shall attend such meetings and take notes of discussions during the meeting and the decisions of the Owner/BHEL/Consultant shall be strictly adhered to in performing his works. In addition to the above weekly meetings, the Owner/Consultant/BHEL may call for other meetings either with individual contractors or with selected number of contractors and in such a case the contractor, if called will also attend such meetings with BHEL.

D.23.3 Time is the essence of the contract & the contractor shall be responsible for performance of his work in accordance with the specified construction schedule. If at any time the contractor is falling behind the schedule, he shall take necessary action to make good for such delay by increasing his work force or by working overtime or otherwise accelerate the progress of the work to comply with the schedule and shall communicate such actions in writing to the BHEL satisfying them that his action will compensate for the delay. The contractor shall not be allowed any extra compensation for such action.

D.23.4 BHEL shall however not be responsible for provision of additional labour and/or materials or supply or any other service to the contractor except for the coordination work between various contractors as set out earlier.

D.24.0 **FIELD QUALITY PLANS AND RECORDS:**

The contractor shall maintain at his Site Office upto date copies of all drawings, specifications, FQPs and other contract documents and any other supplementary data complete with all the latest information thereto. The contractor shall also maintain in addition the continuous record of all changes to the above contract documents, drawings, specifications, supplementary data etc. effected at the field and on completion of his total assignment under the contract, shall incorporate all such changes on the drawings and other engineering data to indicate as installed/build conditions of the equipments furnished and erected under the contract.

Such "AS BUILT DRAWINGS" and "ENGINEERING DATA" shall be submitted to BHEL in required number of copies.

D.25.0 **CONTRACTOR'S MATERIALS BROUGHT ON TO SITE:**

D.25.1 The contractor shall bring to site all equipments, components, parts, materials, including construction equipment, tools & tackles for the purpose of the works under intimation to the owner/BHEL. All such goods shall, from the time of there being brought to site but may be used for the purpose of the works only and shall not on any account be removed or taken away by the contractor without the written permission of the BHEL.

D.25.2 After the completion of the works the contractor shall remove from the site under the direction of the BHEL the material such as construction equipment, erection tools and tackles, scaffolding etc. with the written permission of BHEL. If the contractor fails to remove such materials within fifteen (15) days of issue of a notice by the BHEL to do so, then BHEL shall have the liberty to dispose/remove such materials and expanses incurred by BHEL in this regard will be recovered from the Contractor.

D.26.0 **PROTECTION OF PROPERTY AND CONTRACTOR'S LIABILITY:**

D.26.1 The contractor shall be responsible for any damage resulting from his operation. He shall also be responsible for protection of all persons including members of public and employees of the Owner/BHEL and the employees of other contractors and subcontractors building, other plants and equipments and utilities either above or below the ground.

D.26.2 The contractor will ensure provisions of necessary safety equipments such as barriers, sign-boards, warning lights and alarm etc. to provide adequate protection to persons and property. The contractor shall be responsible to give reasonable notice to Owner/BHEL of public or private property and utilities when such property and utilities are likely to get damaged or injured during the performance of his work shall make all necessary arrangements with such owners related to removal and or replacement or protection of such property and utilities.

D.27.0 **PAINTING:**

All exposed metal parts of the equipment including pipings, structures, railings etc. wherever applicable shall be first painted with at least one coat of suitable primer after thoroughly cleaning all such parts off dirt and rust scales, greases, oil and other foreign materials by wire brushing, scraping or/and blasting and the same being inspected and approved by the Engineer for painting. After wards the above parts shall be finished with two coats of enamel paint. The quality of the finish paint shall be as per the standards of ISI equivalent and to be of the colour as approved by the Owner/BHEL.

D.28.0 **PROTECTION OF MONUMENTS AND REFERENCE POINTS:**

The contractor shall ensure that at points such as relic, antiquity, coins, fossils etc. which he may come across during the course of performance of his works either during excavation or elsewhere are properly protected & handed over to the owner under intimation to BHEL. Similarly the contractor shall ensure that the bench marks reference points etc. which are marked out either with the help of owner or by BHEL shall not be disturbed in any way during the performance of his works. If any work is to be performed which may disturb such references, the same shall be only after these are transferred to other suitable locations under the direction of BHEL. The contractor shall provide all necessary materials and assistant for such relocation of reference points etc.

D.29.0 **WORK AND SAFETY REGULATIONS:**

D.29.1 The contractor shall ensure the safety of all the workmen, materials, and equipment either belonging to him or to others working at site.

D.29.2 The contractor will notify the BHEL office of his intention to bring on to site any equipment or any container with liquid or gases, fuel or other substances which may create hazards. BHEL shall have the right to prescribe the conditions under which such equipment or container may be handled and used during the performance of the works and the contractor shall strictly adhere to such instructions. BHEL shall have strictly the right to inspect any construction plant and to forbid its use, if in his opinion it is unsafe. No claim due to such prohibition shall be entertained by BHEL.

D.29.3 Where it is necessary to provide and/or store petroleum products or petroleum mixtures & explosive, the contractor shall be responsible for carrying out such provision and/or storage in accordance with the rules and regulations laid down in Petroleum Act,1934. Explosively Act,1948 and petroleum and carbide of calcium manual published by the Chief Inspector Of Explosive of India. All such storage shall have prior approval of BHEL in case any approval are necessary from the Chief Inspector of Explosive of any statutory authorities, the contractor shall be responsible for obtaining the same.

D.29.4 The contractor shall be responsible for the safe storage of his & his sub-contractor's radio-active source if any.

D.30.0 **ELECTRICAL SAFETY REGULATIONS:**

D.30.1 In no circumstances will the contractor interfere with fuses and Electrical Equipment belonging to BHEL/Owner or to the other contractors.

D.30.2 Before the contractor connects any electrical appliances to any plug or sockets belonging to the other contractor or Owner, he shall:

(a) Satisfy the Owner/BHEL that the appliances are in good working conditions.
(b) Inform the Owner/BHEL of the maximum current, relating, voltage etc. of the appliances.
(c) Obtain permission of the Owner detailing the sockets to which the appliances may be connected.

D.30.3 The BHEL will not grant permission to the contractor until he satisfies that:

(a) The appliance is in good conditions and fitted with suitable plug.
(b) The appliance is fitted with a suitable cable having proper earthing provisions.

D.30.4 No cable in use will be disturbed by the contractor without prior permission. No weight of any description will be imposed on any such cable and no ladder or similar equipment will rest against or attached to it.

D.30.5 No work shall be carried out on any live equipment. The equipment must be made safe by the BHEL/Owner and a permit to work issued before any work is carried out.

D.30.6 The contractor shall employ the necessary number of qualified full time electrician to maintain his temporary electrical installation.

D.31.0 **CONSUMABLES:**

The contractor shall make arrangements for an adequate inventory at site of necessary consumable prior to erection so that the requirements of the same will not come in the way of timely completion of the works under the contract.

D.32.0 **MILD STEEL AND ALUMINIUM WELDING & OTHER SPECIAL PROCESSES :**

D.32.1 Only an approved and qualified welder shall be employed by the contractor. The welder will be subjected to pre-qualification test by Owner/BHEL.

D.32.2 The Contractor shall ensure that personnel employed for doing other special processes like tube/pipe bending etc. are having proper experience and are qualified for doing such work.

D.32.3 Erection of Aluminium tubular bus bar shall include cutting, bending, aluminium welding with sleeves (sleeves supplied by BHEL), Radiographic testing and D.P test of 100% welded joints, fixing corona end bells etc to complete.

D.32.4 For MS welding, red lead paint shall be applied followed by aluminium paint and bitumen after welding. For GS welding , two coats of cold galvanising anti-corrosive paint shall be applied after welding. In case any special process is indicated in customer's specification, then the same shall be applicable.

D.32.5 10% welded joints in earthing shall be tested for Dye penetration test.

****

SECTION – E

SCOPE OF WORK AND COMPLETION SCHEDULE

SECTION - E

SCOPE OF WORK AND COMPLETION SCHEDULE

E.1.0 **SCOPE OF WORK :**

The scope of work of the successful tenderer shall comprise but not limited to the following. The Tenderer shall read this scope of work in conjunction with all terms and conditions (Section -A,B,C & D) contained else where in this document. The quoted rates for various equipments/activities are deemed to include all the below mentioned activities and nothing extra is payable on account of these.

E.1.1 **For Contractor supplied materials:** It shall be prime responsibility of contractor to ensure safe storage of material supplied by him. The contractor may construct open/ covered store to ensure proper storage of the materials as per site requirement. Contractor will be permitted to dismantle and take back the stores after completion of the work. No additional payment shall be made/deducted on account of stores constructed by contractor for storing these materials.

For BHEL supplied materials: Contractor shall construct open/ covered store only if the same is mentioned in the Bill of Quantities.

If due to any reason the material can not be unloaded in designated store/open yard and it is unloaded at some nearby place on instructions of site Engineer then this material has to be shifted by subcontractor to designated store/open yard when it is ready without any additional claim. Any multiple handling of material within project premises is not payable by BHEL

Some items may get delivered at stores of other BHEL unit on account of convenience of despatch within the plant area. These material will be collected/shifted by subcontractor to switchyard store at no extra cost.

E.1.2.1 Inspection / verification of equipment / materials received for any shortage / damage after opening the packing cases and intimating the same to BHEL/ Owner and underwriters within the time period specified by BHEL and to strictly follow the procedures specified. Storage of equipment indoor / open stores in line with the instructions of the manufacturer / BHEL.

Conservation / maintenance / upkeep of the equipment in the store.

Temporary lighting in stores & construction area wherever required.

Safety / Security of equipments / materials.

E.1.2.2 **Watch and ward of Erected Equipment/Material** - Soon as the erection of switchyards are taken up, the watch and ward for the erected items will also be arranged by the subcontractor till the switchyards are taken by BHEL/customer

E.1.3 Erection, levelling and fixing of GI Structures of towers, beams including all the equipment support structures on their respective foundations in line with drawings to be furnished by BHEL. Final adjustment of foundation levels by chipping and dressing, checking location, elevation, etc., and checking position of foundations / anchor bolts and grouting/under pinning of anchor bolts and base plates wherever necessary for certain aux. equipment and accessories of main equipment. Materials such as M.S. packing shims of required thickness for levelling and alignment and civil material for final grouting with 1:1 cement mortar with approved make anti-shrinkage compound and finishing shall be arranged by contractor. *The grouting/underpinning of all tower and equipment foundation bolts as per specifications is in the scope of Contractor ie Bidder.*

Fixing and assembly including minor modification, where required, of all cable trench materials like cable tray racks, cable trays, coupler plates, 'T' and 'L' bends etc in line with drawings to be furnished by BHEL. The work shall also covers laying of all cables including glanding and termination for all the equipments covered under BOQ . At various crossing and wherever necessary the cables to pass through pipes laid underground in line with drawing to be furnished by BHEL. Pipes will be supplied by BHEL for cabling from trench to equipment and laying of the same including excavation and backfilling and making and finishing of holes in trench walls will be carried out by the contractor.

E.1.4 Transportation of equipment/material from stores to erection site, erection of equipment materials in line with the drawings/instructions to be furnished by BHEL including filtration of oil wherever required, testing and commissioning and handing over to owner/customer.

E.1.5 Earthing (if called for in BOQ) : laying of earth mat and risers including excavation, bending, cutting, welding, cleaning and painting of joints, backfilling and earth compaction etc. as per BHEL drawings/specifications.

Cutting, pointing and driving of MS rod electrode, installation of pipe electrode and construction of chambers as per drawings.

Earth connections from risers to equipment, structures etc. through GI flat including bending, cutting, welding, cleaning and painting of welded joints as per BHEL's drawings/specifications.

Welding electrode should be of reputed make company ISI certified, and as per BHEL's specifications.

E.1.6 Providing for all consumables : It shall be noted by the tenderer that BHEL shall supply only the equipments/materials listed in schedule of equipments as free issue items. Any other sundry items required for completion of the job shall be procured by the contractor.

All Equipment fixing hardware shall be arranged by BHEL.

All cable glands shall be arranged by BHEL. However cable accessories like ferrules, lugs and markers, cable dressing and tying material etc. shall be in the scope of the contractor. The lugs shall be of reputed make company and as advised by BHEL site Incharge.

E.1.7 Maintenance of switchyard and associated equipment till handing over to the owner, any other activity necessary for completion of the job but not specifically mentioned in this specification.

E.1.8 Unloading, shifting, storing, verification, preservation during storage and handing over of spare items/maintenance equipment to Customer/Owner.

E.1.9 Reconciliation and shifting of all the balance excess material and scrap material to BHEL store or handover in customer store, as the case may be.

This excess material may include erection spares for various items of BOQ such as ACSR/AAC conductor, Al tube, Cable trench materials, Cables etc. Excess erection spare (except main equipment) supplied by purchaser upto 10% of the erected quantity shall be absorbed by the contractor & shall not be payable. Only as erected quantity of the various items of BOQ shall be payable as per the unit rates. However, any erection spares (excluding main equipment) handled in excess of 10% of the erected quantity shall be payable @ 10% of the unit rate (to account for only unloading, storage and watch & ward. However, any additional quantity of main equipment, handled but not erected, shall be paid @ 10% of the item rate.

E.2.0 **ERECTION, TESTING & COMMISSIONING REQUIREMENTS :**

E.2.1 All the switchyard equipment shall be erected, installed, tested and commissioned by the contractor to the satisfaction of BHEL/Owner adhering to the latest national standard and codes. Some of the Reference standards are given below which are normally applicable for Switchyard work. ETC activity of all other equipment to be done as per relevant standards.

a) IS : 10118-1982 Code of practice for selection, installation and maintenance of switchgear & control gear.

b) IS : 10028-1985 Code of practice for installation and maintenance of transformer.

c) IS : 732-1963 Code of practice for electrical wiring.

d) IS : 3043-1963 Code of practice for earthing.

e) IS : 2309-1989 Code of practice for the protection of building and allied structure against lightning.

f) IS : 1646-1982 Code of practice for fire safety of building (General) Electrical installations.

E.2.2 All electrical equipment and installations hall also conform to the latest Indian Electricity rules as regards safety, earthing and other essential provisions specified therein for insulation and operation of electric plants.

E.2.3 Earthing system, earth connections, testing of earthing system and connection, lightning protection system, electrical clearance and safety shall be strictly followed as per the national specifications which will be given to the successful bidder.

E.2.4 The schedule of equipment indicates the quantity of the equipment and these will be procured by BHEL and are to be erected by the contractor. The contractor has to erect, test all equipment for system commissioning and putting the same into operation. The trial run of individual equipment and final commissioning upto the handing over of the system to the customer of BHEL is the responsibility of the contractor.

Contractor will have to provide necessary support i.e.. suitable manpower, common tools, conventional testing instruments as per Annexure 'N' and other assistance as required by BHEL wherever expert services of any equipment are arranged by BHEL viz.. SF6 circuit breakers.

E.2.5 All equipments, material and accessories provided by the contractor shall conform to the requirements of the relevant Indian standard or International standard.

E.3.0 **METHOD OF WORKMANSHIP & QUALITY OF WORK**:

E.3.1 Workmanship will be in accordance with the best engineering practices to ensure satisfactory performances and service life.

E.3.2 All works shall be installed in a first class manner with technical skill in the trade involved to achieve quality of work of high standard. BHEL site supervisor's comments regarding quality of work should be taken care by the contractor.

E.3.3 The erection work shall be supervised by the competent supervisor holding supervisory license by the state or central Government or statutory licensing authority, as the case may be.

E.3.4 The installation shall be carried out in such a manner not to obstruct access to the other equipment installed or likely to be installed in the vicinity.

E.3.5 The complete erection shall be performed in accordance with the modern practices for similar substation equipments.

E.4.0 **EQUIPMENT, MATERIAL & SERVICES TO BE FURNISHED**

E.4.1 The contractor shall employ sufficient labours, skilled, unskilled, supervisory and administrative personnel for timely and effective execution of the contract.

E.4.2 The contractor shall arrange as per Annexure - Q erection tools and tackles, mobile crane, all transport vehicles, measuring & testing equipments necessary for timely and effectively execution of the contract. All measuring & testing instruments shall be pre-calibrated through a certifying agency before use. The certificate of calibration shall be submitted to Engineer for records. In case Contractor is unable to provide the calibrated measuring and test instruments then 'ENGINEER' according to his own wisdom / judgement can recommend a deduction of maximum limit up to 5% from the Contractor's bill. But this in no way relieves the Contractor from arranging the test & measuring instruments / equipment as required for completion of work without affecting the quality of work and meeting any Contractual obligation whatsoever.

E.4.3 All equipment including individual component fittings and accessories shall be properly stored at site so as to obviate any deterioration of electrical properties and mechanical damages.

E.4.4 All equipment shall be thoroughly cleaned of packing materials, scales rust, oil grease etc. prior to commencement of the installation work.

E.4.5 All equipment shall be checked physically for the completeness of all components and devices before taking up installation.

E.4.6 The contractor shall repair all minor defects in equipment, free of charge, if required prior to installation in consultation with equipment manufacturer of BHEL, so that manufacturer's guarantee is not affected in any way. In case of any major damage to the equipments, the same shall be rectified or replaced by the manufacturer's representatives with the approval of BHEL / Owner.

E.4.7 All equipments and accessories shall be installed strictly in accordance with the manufacturer's instructions / drawings. Equipment supplied in sections or in dismantled conditions shall be re-assembled at site with all associated accessories as per manufacturer's instructions.

E.4.8 If the services of BHEL engineers, suppliers, and / or of any equipment manufacturers are required by the contractor at any stage of work, it will made available on chargeable basis at existing rates prevailing at that time.

E.4.9 All consumable items required to carry out welding, brazing, soldering etc. for the erection and commissioning is included in the offer of contractor and shortages in hardware (due to careless / negligent handling at site) to be made up free of cost by the contractor. The quality of such replenishment shall be at par with main supply and to be acceptable to BHEL / Owner.

E.4.10 The successful contractor should note that after execution of work they will send marked up drawings "as erected" drawings to Project Manager at site for preparation of firm "AS BUILT" drawings. "AS BUILT" drawings will bear the signature of Project Manager of BHEL and Contractor's representative.

E.4.11 **OIL FILTRATION (IN CASE OF TRANSFORMERS COVERED IN BOQ):**

An extra high vacuum oil filtration plant with a minimum of thousand GPH capacity shall be employed by the contractor for oil filtration.

An empty oil tank of minimum of 12000 ltrs. capacity also shall be arranged by the contractor to prepare the oil before pushing it into the transformer.

E.5.0 **TESTING AND COMMISSIONING OF EQUIPMENT:**

E.5.1 The testing of all electrical equipment as well as the system as a whole shall be carried out to ensure that the equipment and its components are in satisfactory condition and will successfully perform its functional operation. All required tests shall be carried out by the contractor using his own instruments, testing equipments as well as qualified testing personnel. The tests on power transformer (if covered in BOQ) shall include winding resistance, tan-delta, PPM of moisture, acidity in oil. For SF-6 Circuit Breaker (if covered in BOQ) closing and tripping timing test shall also be carried out in addition to other routine tests.

E.5.2 At site all equipments shall be energised only after certification by the personnel performing the test that the equipment is ready for energising and with the concurrence of BHEL / Owner.

E.6.0 **PREPARATION FOR COMMISSIONING:**

E.6.1 After completion of the installation at site and for the preparation of system commissioning the contractor shall carry out checking and testing of all equipment and installation in accordance with the agreed standards, codes of practices of Indian Standards Institutions and specific instruction furnished by the particular equipments suppliers as well as the Owner.

E.6.2 Required checking to be made on all equipment and installation at site. This shall include but not limited to the following:

a) Physical inspection for removal of any foreign bodies external defects such as damaged insulators, loose connecting bolts, loose foundation bolts etc.

b) Check for grease insulating / lubricating oil leakage and its proper level / quantity.

c) Check for free movement of mechanism of the circuit breaker / isolator and rotating parts of other rotating machine and devices.

d) Check for tightness of all the cables, busbars as well as earth connection in the main earthing net work.

e) Check for clearance of live busbar and conductors from the metal enclosures.

f) Continuity check in case of power and control cables.

g) Checking of all mechanical and electrical interlocks, including tripping of breakers using manual operation of relay.

h) Checking of alarm and annunciation circuits by manual actuation of relevant relays like buchholz relay in case of transformer.

i) Check and calibrate devices requiring field adjustments / calibration like adjustment of relay setting etc.

j) Check proper connection to earth-mat work of all non current carrying parts of equipments & installation.

E.6.3 All the measuring and testing instruments will be arranged by the contractor and while submitting his quotation he shall furnish list of testing equipments which are readily available with him and also which can be procured by him from outside agency for the purpose of testing and commissioning.

E.7.0 **MINOR CIVIL WORK:**

E.7.1 Minor civil works including secondary grouting/under pinning of structure i.e. filling the gap between structure and foundation after levelling, alignment shall be done by the contractor at no extra cost. This shall also include necessary materials required for doing the work.

E.7.2 Minor civil works of final / secondary grouting of structures, towers equipment has to be arranged by the contractor and the rate for the same should be included in respective erection. Final / secondary grouting means filling the gap between the structure and foundation after levelling, alignment etc.

E.7.3 Minor civil work shall also include fixing of foundation bolts for radiator / cooling oil pump etc. Foundation bolts for such work shall however be arranged by BHEL.

E.8.0 **PRICE SCHEDULE**

E.8.1 The prices to be quoted FIRM and should be valid till the work is completed to the satisfaction of BHEL / Owner and handed over the system to Owner.

E.8.2 The quantities given in schedule of equipment are estimated ones and may vary up to ± 30% on the total value of the contract. Quantity of individual item may vary up-to any extent.

E.9.0 **START OF WORK AND COMPLETION SCHEDULE**

E.9.1 The contractor shall mobilise at site within one week from the date of LOI.

E.9.2 The entire work under this tender is required to be completed as indicated in Letter of Intent.

E.9.3 Detailed Bar Chart (activity schedule) should be submitted by the bidder in Annexure 'M' showing as to how the work is proposed to be executed in order to meet the completion schedule. This shall be filled in by the bidder after mobilisation at site and to be given to ENGINEER-IN-CHARGE at site.

E.9.4 The contractor is required to commence the work within the time as indicated in Letter of Intent failing which the contract is liable to be cancelled and EMD/SD shall be forfeited.

E.10.0 **SCHEDULE OF EQUIPMENT:**

The estimated quantities in the Schedule of Equipment given in Annexure-1 is tentative to give idea of work and to enable tenderer to quote unit rates. The actual quantities required to be erected shall be based on relevant drawings and latest revisions.

ANNEXURE TO CONDITIONS OF CONTRACT FOR ETC WORKS

The following terms and conditions shall form a part of the tender document. If any discrepancies found between below mentioned clauses and clauses in the Conditions of Contract for Erection Works, DOC. NO. – TB-ETC-GCC, REV.-02, dated 20th JUNE, 2005, the clauses mentioned in this annexure shall prevail.

A. Condition of Contract for Erection works (DOC. NO. – TB-ETC-GCC, REV.-02, 20th June, 2005):

A. 1.0: GENERAL INSTRUCTION

1.1 **All pages of the tender documents shall be duly signed, stamped and submitted along with the offer in token of complete acceptance thereof.** The information furnished shall be complete by itself. The tenderer is required to furnish all the details and other documents as required in the following pages.

1.2. Tenderers are advised to study all the tender documents carefully. Any submission of tender by the tenderer shall be deemed to have been done after careful study and examination of the tender documents and with the full understanding of the implications thereof. Should the tenderers have any doubt about the meaning of any portion of the Tender Specification or find discrepancies or omissions in the drawings or the tender documents issued are incomplete or shall require clarification on any of the technical aspect, the scope of work etc., tenderer shall at once, contact the authority inviting the tender well in time (so as not to affect last date of submission) for clarification before the submission of the tender. Tenderer's request for clarifications shall be with reference to Sections and Clause numbers given in the tender documents. The specifications and terms and conditions shall be deemed to have been accepted by the tenderer in his offer. Non-compliance with any of the requirements and instructions of the tender enquiry may result in the rejection of the tender.

A.2.0 PROCEDURE FOR SUBMISSION OF SEALED TENDERS

A.2.1 Bidders may please refer Cl no. 02 to Cl no. 05 of the Notice inviting tender.

A.2.2 The tenders received after the specified time of their submission shall be treated as 'Late Tenders' and shall not be considered under any circumstances.

A.2.3 Tenders shall be opened by the officers concerned of BHEL at the time, date and venue as specified in the tender enquiry. Tenderer or their authorized representative may witness the bid opening.

A.2.4 The tenderer shall closely pursue all the clauses, specifications and drawings indicated in the Tender Documents before quoting. Should the tenderer have any doubt about the meaning of any portion of the Tender Specifications or find discrepancies/omission in the drawings or the tender documents issued are incomplete or shall require clarification on any of the technical aspect, scope of work etc. he shall at once contact the authority inviting the tender for clarification before the submission of the tender.

A.2.5 Before submission of offer, the tenderers are advised to inspect the work & the environments and be well acquainted with the actual working and other prevalent conditions, facilities available, sourcing of material and labour, means of transport and access to site, accommodation, etc. No claim will be entertained later on the grounds of lack of knowledge on any of these conditions/ resources.

A.2.6 Tenderer must fill up all the schedules and furnish all the required information as per the instructions given in various sections of the tender specification. Each and every page of the Tender Specification must be SIGNED AND SUBMITTED ALONG WITH THE OFFER by the Tenderer in token of complete acceptance thereof the information furnished shall be complete by itself.

A.2.7 The tenderer shall quote the rates in English Language and international numerals. Total price offered should be entered in figures as well as in words. For the purpose of the tender, the metric system of units shall be used.

A.2.8 T**he tenderer shall quote a percentage above/ below/At Par the rates shown in the "Bill of Quantities Cum Price Schedule (Annexure-I)" of subject tender.**

A.2.9 **The quoted percentage will apply to the individual items of "Annexure-I i.e Bill of Quantity Cum Price Schedule" uniformly.**

A.2.10 All entries in the tender shall either be typed or be written legibly in ink. Erasing and overwriting are not permitted and may render such tender liable for rejection. All cancellations and insertions shall be duly attested by the tenderer.

A.2.11 The tenderer must provide the registered e-mail of their registered office along with the addresses and authorised phone/mobile nos.

A.3.0 <u>ADJUSTMENT PRICE DISCREPANCY (IES): - Not Applicable being e procurement.</u>

A.4.0 <u>EVALUATION OF TECHNICAL BIDS</u>

4.1 Technical Bids submitted by the tenderer will be opened first and evaluated for fulfilling the Pre-Qualification criteria and other conditions in NIT/Tender documents, based on documentary evidences submitted along with the offer.

4.2 In case the same qualifying experience is claimed by more than one bidder due to subletting of work by main contractor to subcontractor (s) then following conditions shall be applicable.

a) For labour + consumable contract without material and T&P:
Benefit of work experience shall be given to the subcontractor who has actually executed job and not to the contractor offloaded down the line.

b) For contract with complete scope i.e. with materials, T&P, labour and consumable:

i) Benefit of work experience shall be given to the subcontractor who has actually executed job and not to the contractor offloaded down the line.

ii) If the contractor offloads the labour and/or T&P portion only, Benefit of work experience shall be given to the main contractor and not to the subcontractor who has executed only as labour supply contractor

The bidder's qualification shall be subject to submission of documentary proof. BHEL reserves the right to ask for further proofs including submission of TDS certificates/ for the said job

4.3 In case the qualifying experience is claimed by private organizations based on Work Order and completion certificates from another private organization, BHEL reserves the right to ask for further proofs including submission of TDS certificates/ form 26AS /bills for the said job.

4.4 Credentials of all the bidders participating in open tender will be scrutinized thoroughly by the nominated committee w.r.t. the pre-qualifying requirement for the tender.

4.5 Details of qualifying work(s) executed by the bidder will be forwarded to the principle employer for verification of the work with respect to completion, commencement & completion date, scope and value of the work executed. Performance feedback of the bidder will also be sought from the principle employer.

4.6 BHEL may conduct onsite verification of at least one of the qualifying work to verify completion of the work and evaluate capability and performance of the bidder.

4.7 The bidder representative may be called for the discussion with the committee. His originals may be verified by the committee. In addition to above their organization chart and detailed list of manpower, tools & plants and technical capability may be discussed and ascertained by the committee.

5.0 **EVALUATION OF PRICE BIDS**

5.1 Price Bids of unqualified bidders shall not be opened.

5.2 The offers will be evaluated on the basis of total price basis (refer "BILL OF QUANTITY AND PRICE SCHEDULE) as shown in the price bid.

5.3 Reasons for rejection of the bid shall be intimated in due course after issue of LOI/LOA to successful bidder and receipt of unconditional acceptance of LOI /LOA from the successful bidder

5.4 In case of electronic Reverse Auction, the unqualified bidders shall not be allowed to participate in reverse auction.

A.6.0 DOCUMENTS TO BE ENCLOSED:

Full information shall be given by the tenderer in respect of the following.

6.1 Tenders shall be signed by persons duly authorized/empowered to do so. An attested copy of the Power of Attorney to be submitted in all cases except where the sole proprietor is the signatory to the tender documents

6.2 *PERMANENT ACCOUNT NUMBER:*

Certified copies of Permanent Account Numbers as allotted by Income Tax Department for the Company / Firm / Individual Partners, etc. shall be furnished along with tender.

6.3 AUDITED *BALANCE SHEET AND INCOME TAX RETURN*:

Copy of Audited Balance sheets and income tax return for last three financial years (financial years as specified in PQR)

6.4 *SOLVENCY CERTIFICATE:*

If asked in NIT, bidder should submit solvency certificate (not older than 12 months from date of tender notification) issued by any scheduled bank.

6.5 *DOCUMENT RELATED TO INCORPORATION OF BUSINESS ENTITY:*

6.5.1 *IN CASE OF INDIVIDUALTENDERER:*
His/her full name, address and place & nature of business.

6.5.2 *IN CASE OF PARTNERSHIP FIRMS:*
The names of all the partners with address. A copy of the partnership deed/instrument of partnership duly certified by the Notary shall be enclosed.

6.5.3 *IN CASE OF COMPANIES:*
Date & place of registration including date of commencement certificate in case of Public Companies and the nature of business carried on by the company. Certified copies of Memorandum and Articles of Association are also to be furnished.

6.6 Offer forwarding letter over the letterhead

6.7 *Declaration sheets (As per Prescribed format) over the letter head*

6.8 *No Deviation certificates (As per Prescribed format) over the letterhead*

6.9 GST Registration certificate

All the data required to be enclosed with the tender need to be furnished neatly typed, signed & stamped in the given formats only (in the form of separate sheets) failing which the tender may be considered as incomplete and is liable for rejection. Documentary proof wherever necessary also need to be enclosed.

A.7.0 VALIDITY OF OFFER

The rates in the Tender shall be kept valid for acceptance for a minimum period of **Four Months** from latest due date of offer submission (including extension(s), if any). In case BHEL (Bharat Heavy Electricals Limited) calls for negotiations, such negotiations shall not amount to cancellation or withdrawal of the original offer which shall be binding on the tenderer.

A.8.0 REJECTION OF TENDER & OTHER CONDITIONS:

8.1 The decision of acceptance of tender will rest with BHEL which does not bind itself to accept the lowest tender or any tender and reserves to itself full rights for the following without assigning any reasons whatsoever:

(a) To reject any or all of the tenders.

(b) To split up the work amongst two or more Tenderer as per NIT

(c) To award the work in part as per NIT

(d) In either of the contingencies stated in (b) and (c) above to modify the time for completion suitably.

8.2 Conditional tenders, unsolicited tenders, containing abnormally low/ unworkable rates & amounts, tenders which are incomplete or not in the form specified or defective or have been materially altered or not in accordance with the tender conditions, specifications etc. are liable to be rejected.

8.3. Tenders are liable to be rejected in case of unsatisfactory performance of the tenderer with BHEL, or tenderer under suspension (hold / banning / delisted) by any unit / region / division of BHEL or tenderers who do not comply with the latest guidelines of Ministry / Commissions of Govt. of India. BHEL reserves the right to reject a bidder in case it is observed that they are overloaded and may not be in a position to execute this job as per the required schedule in line with 'NIT'. The decision of BHEL will be final in this regard.

8.4 In case of any adverse information is received concerning performance, capability or conduct of the tenderer after issue of tender enquiry or opening of tender or award of work, BHEL reserves the right to reject the offer at any stage as deemed fit.

8.5 Offers with inadequate Tools & Plants, Manpower Deployment Plan, and Method Statement are liable for rejection.

8.6 If a tenderer who is a proprietor expires after the submission of his tender or after the acceptance of his tender, BHEL may at its discretion, cancel such tender. If a partner of a firm expires after the submission of the tender or after the acceptance of the tender, BHEL may cancel such tender at its discretion unless the firm retains its character.

8.7 BHEL will not be bound by any Power of Attorney granted by the tenderer or by changes in the composition of the firm made subsequent to the execution of the contract. BHEL may, however, recognise such Power of Attorney and changes after obtaining proper legal advice, the cost of which will be chargeable to the contractor concerned.

8.8 If the tenderer deliberately gives wrong information in his tender, BHEL reserves the right to reject such tender at any stage or to cancel the contract, if awarded, and forfeit the Earnest Money/Security Deposit/any other moneys due.

8.9 Canvassing in any form in connection with the tender is strictly prohibited and the tenders submitted by the tenderer who resorts to canvassing are liable to be rejected.

8.10 In case the Proprietor, Partner or Director of the Company / Firm submitting the Tender, has any relative or relation employed in BHEL, the authority inviting tender shall be informed to the fact as per specified format along with the offer, failing this, BHEL may, at its sole discretion reject the tender or cancel the contract and forfeit the Earnest Money/ Security Deposit.

8.11 The successful tenderer should not sub-contract the part or complete work detailed in the tender specifications without written permission of BHEL's Site In charge/ Sector Head. For this the contractor shall submit request application to site in charge supported by credentials (financial and technical) and resource mobilisation schedule of such sub-contractor. Such request is to be considered in consultation with end user/ultimate customer (if applicable) and subject to satisfactory credentials, fund flow arrangement between them, HSE and other contractual and statutory obligations. The tenderer is solely responsible to BHEL for the work awarded to him.

8.12 The Tender submitted by a tenderer shall become the property of BHEL who shall be under no obligation to return the same to the bidder. However unopened price bids and

late tenders shall be returned to the bidders.

8.13 unsolicited discount received after the due date and time of Bid Submission shall not be considered for evaluation. However, if the party who has submitted the unsolicited discount/rebate becomes the L-I party, then the awarded price i.e contract value shall be worked out after considering the discount so offered.

8.14 BHEL shall not be liable for any expenses incurred by the bidder in the preparation of the tender irrespective of whether the tender is accepted or not.

A.9.0 NO DEVIATIONS ARE ACCEPTABLE: -

Offers with deviations are likely to be rejected. However, if the bidder insists on any technical or commercial deviations from the specifications and / or tender conditions, **the price implication, if any, of withdrawing the deviations must be submitted along with the price bid in a separate sealed envelope** super-scribed "**PRICE IMPLICATION FOR WITHDRAWAL OF DEVIATIONS**". No price implication for withdrawal of deviation shall be accepted at a later date, after opening of technical bid.

A.10.0 Consortium**/** JV bidding is not allowed under this NIT. Please refer the Pre-Qualifying requirement for details terms & conditions in case of Consortium/JV bidding

B. EARNEST MONEY DEPOSIT

Every tender must be accompanied by the prescribed amount of Earnest Money Deposit (EMD) mentioned in NIT.

1. Mode of EMD deposit:

EMD can be submitted in any one of the following modes:

i) Cash deposit as permissible under the extant Income Tax Act (before tender opening),

ii) Electronic Fund Transfer credited in BHEL account (before tender opening). Details of BHEL account mentioned in tender document.

iii) Banker's cheque/Pay order/Demand Draft, in favour of 'BHEL' and payable at New Delhi (Along with offer)

iv) Fixed Deposit Receipt (FDR) issued by schedule Banks/Public Finance Institutions as defined in the companies ACT (FDR should be in the name of the contractor, a/c BHEL

v) In case total EMD amount is more than Rs. 2 Lakh, the amount in excess of Rs. 2 lakh may be accepted in the form of Bank Guarantee from scheduled bank. The Bank Guarantee in such cases shall be valid for at least six months.

C. No other form of EMD remittance shall be acceptable to BHEL.

1. Forfeiture of EMD

   EMD by the bidder will be forfeited as per NIT conditions, if

   i) After opening the tender and within the offer validity period, the bidder revokes his tender or makes any modification in his tender which is not acceptable to BHEL.

   ii) The contractor fails to deposit the required Security deposit or commence the work within the period as per LOI/contract.

2. EMD by the tenderer shall be withheld in case any action on the tenderer is envisaged under the provision of extant "Guidelines on Suspension of business dealing with supplier/contractors" and forfeited/ released based on the action as determined under these guidelines.

3. In the case of unsuccessful bidders, the Earnest Money will be refunded to them within a reasonable time after award of work.

4. EMD shall not carry any interest.
5. EMD of successful bidder shall be retained as part of Security Deposit.
6. Bidders may please note that "One Time EMD" provision stands deleted. Hence, bidders who have deposited Rs. 2 Lakh as 'One Time EMD' with BHEL are also required to submit the requisite amount of EMD.

7. **No MSE benefits shall be given to MSEs bidder for WORKS CONTRACT. Please refer clause no. N (facilities provided to MSEs) for detail.**

D. **SECURITY DEPOSIT**

Security Deposit means the security provided by the Contractor towards fulfilment of any obligations in terms of the provision of the contract.

1. Upon acceptance of Tender, the successful Tenderer should deposit the required amount of Security Deposit for satisfactory completion of work. **The total amount of Security Deposit will be 5 % of the Contract Value. EMD of the successful tenderer shall be converted and adjusted towards the required amount of Security Deposit.**

2. Mode of Security deposit:
   The security Deposit should be furnished **before start of the work** by the contractor.

   "Bidders agrees to submit performance security required for execution of the contract within the time period mentioned. In case of delay in submission of Performance security, enhanced performance security which would include interest (SBI rate + 6%) for the delayed period, shall be submitted by the bidder. Further, if performance security is not submitted till such time the first bill becomes due, the amount of performance security due shall be recovered as per terms defined in NIT / Contract, from the bills along with due interest".

   The balance amount to make up the required Security Deposit of 5% of the contract Value may be furnished in any of the following forms:

   i) Cash (as permissible under the extant Income Tax Act)

   ii) Local cheques of scheduled banks (subject to realization) / Pay Order / Demand Draft / Electronic Fund Transfer, in favour of BHEL.

   iii) Bank Guarantee from Scheduled Banks / Public Financial Institutions as defined in the Companies Act. The Bank Guarantee format for Security Deposit shall be in the prescribed formats enclosed with general conditions of contract.

iv) Fixed Deposit Receipt issued by Scheduled Banks / Public Financial Institutions as defined in the Companies Act. The FDR should be in the name of the contractor, A/C BHEL and duly discharged on the back.

v) Securities available from Indian Post Offices such as National Savings Certificates, Kisan Vikas Patras etc. (Certificates should be held in the name of Contractor furnishing the security and duly endorsed/hypothecated/pledged, as applicable, in favour of BHEL and duly discharged on the back).

(NOTE: BHEL will not be liable or responsible in any manner for the collection of interest or renewal of the documents or in any other matter connected therewith)

3. **Submission of Security Deposit:**

   i) At least 50 % of the required Security Deposit, including the EMD, shall be submitted before start of work. Balance of the Security Deposit can be submitted by way of deduction of 10% of the gross amount progressively from each running bills of the contractor till the total amount of the required Security Deposit is collected.

   ii) If the value of work done at any time exceeds the contract value, the amount of Security Deposit shall be correspondingly enhanced and the additional Security Deposit shall be immediately deposited by the Contractor or it shall be recovered from payment/s due to the Contractor.

   iii) The recoveries made from running bills (cash deduction towards balance SD amount) can be released against submission of equivalent Bank Guarantee in acceptable form, but only once, before completion of work, at the discretion of BHEL.

4. The BG shall be submitted only through the Banker. Along with the BG, the Bank shall also furnish a letter of confirmation (in the prescribed formats enclosed with general conditions of contract).

5. The validity of the Bank Guarantee furnished towards Security Deposit shall be up to three months more than the period of completion of work as stipulated in the LOI and the same will be kept valid by proper renewal till the completion of the work.

6. BHEL reserves the right of forfeiture of Security Deposit in addition to other claims and penalties in the event of the contractor's failure to fulfil any of the contractual obligations or in the event of termination of contract as per terms and conditions of the contract. BHEL reserves the right to set off the Security Deposit, against any claims of any other contracts with BHEL.

7. **<u>Conditions for acceptance of bank guarantees</u>**

   Contractors are advice to obtain Bank Guarantee preferably from any of the following BHEL consortium banks

Sl. No.	Nationalised Bank	Sl. No.	Nationalised Bank
1	Allahabad bank	19	Vijaya Bank
2	Andhra bank		**Public Sector Banks**
3	Bank of Baroda	20	IDBI
4	Canara Bank		**Foreign bank**
5	Corporation bank	21	CITI Bank N.A
6	Central bank of India	22	Deutsche Bank AG
7	Indian Bank	23	The Hongkong and Shanghai Banking Corporation Limited
8	Indian Overseas Bank	24	Standard Chartered Bank
9	Oriental bank of Commerce	25	J P Morgan
10	Punjab National Bank		
11	Punjab & Sindh Bank		**Private bank**
12	State Bank of India	26	Axis Bank
13	State Bank of Hyderabad	27	The Federal Bank Limited
14	Syndicate Bank	28	HDFC
15	State Bank of Travancore	29	Kotak Mahindra Bank
16	UCO Bank	30	ICICI
17	Union Bank of India	31	Indusind Bank
18	United Bank of India	32	Yes Bank

Bank Guarantees from Banks outside BHEL's consortium shall be as below:

The Bank Guarantees of all Public sector banks can be accepted (in addition to consortium banks)

The Bank Guarantees of Co-operative banks shall not be accepted.

Bank Guarantees of other than consortium bank and public sector bank can be accepted subject to an overall exposure limit (at New Delhi) of Rs. 10 crores for banks with networth of more than Rs. 500 crores as on last balance sheet date and Rs 5 crores for banks with net worth between Rs. 350 to Rs 500 crores (A certificate and copy of latest Balance Sheet to be given by the Bank at the time of submission of Bank Guarantees).

In case of private sector banks a clause to be incorporated in the text of Bank Guarantee that it can be enforceable by being presented at any branch of the bank.

In case of foreign vendors, the bank guarantees issued by foreign banks may be confirmed by our consortium bank in India.

In case of Bank Guarantees given by Non-Consortium banks (Private sector or Public sector), the Bank Guarantees are to be enforceable in New Delhi or the town/ city in which the sector office is located.

8. **RETURN OF SECURITY DEPOSIT:**

If the contractor duly performs and completes the work in all respects to the entire satisfaction of BHEL and presents an absolute "No demand certificate", returns properties belonging to BHEL, taken, borrowed or hired by him for carrying out the said works, and furnishes performance bond BG in the prescribed proforma, Security Deposit will be released to the contractor after deducting all costs, expenses and other amounts that are to be paid to BHEL under this contract or other contracts entered into with the contractor. It may be noted that in no case the Security Deposit shall be refunded/released prior to passing of final bill.

E. Bank Account Details for submission of EMD/ Security Deposit through electronic fund transfer mode.

NAME OF THE COMPANY	**BHARAT HEAVY ELECTRICALS LTD**
ADDRESS OF THE COMPANY	**TRANSMISSION BUSINESS GROUP, 10TH FLOOR, JOY TOWER, PLOT NO. *25*, SECTOR- 16A, NOIDA – 201301 (U.P.)**
NAME OF BANK	**STATE BANK OF INDIA**
NAME OF BANK BRANCH	**CAG-II NEW DELHI (17313)**
CITY	**NEW DELHI**
ACCOUNT NUMBER	00000030206227732
ACCOUNT TYPE	**CASH CREDIT**
IFSC CODE	**SBIN0017313**

F. Payment terms: Clause No. C.2.0 stands deleted. Now this clause shall be read as below.

2.1 <u>For all BOQ items (Except item no. 46 to 49, 55 to 63, 72 to 77) Complete scope of work:</u>

2.1.1 No Mobilization Advance shall be paid.

2.1.2 10% of the contract item price on the monthly progressive bills on pro rata basis for receipt, material including arranging crane for unloading, maintaining proper records of receipt & storage in Field Quality Plans (FQPs) and as certified by BHEL Engineer. In case of power transformer/ reactors, 5% amount shall be paid after unloading and 5% after dragging main tank in position on foundation. The sub-items mentioned in transformer/ reactor shall be consider for payment with main item.

2.1.3 60% of the contract item price on the monthly progressive bills on pro rata basis after arranging necessary calibrated tools/tackles required for erection, submitting calibration reports, qualification/experience certificates of welder/Electrician/other staff, levelling, alignment, tightening and completion of erection including maintaining proper records of installation in FQPs and as certified by BHEL, Engineer.

2.1.4 10% of the contract item price on the monthly progressive bills on pro rata basis on arranging calibrated testing equipment, submission of calibration reports, testing of equipment including maintaining proper records of testing in FQPs and as certified by BHEL, Engineer. BOQ items, which are not required to be tested as per FQP, shall be qualified for release of payment on

prorate basis after completion of testing of all equipment's of corresponding bay (As per SLD/ layout)

2.1.5 10% of the contract item price after completion of satisfactory commissioning and submission of complete records of erection/testing/commissioning /charging protocol as per FQPs for the corresponding bay.

2.1.6 Last 10% of the contract item price after all test reports as per contract are jointly witnessed and signed by BHEL/customer, "As Built" changes are incorporated in relevant drawings, material reconciliation and substation is handed over to the Owner / Customer. If the contract is for more than one sub-station, then the same will be released after successful handing over of each sub-station. If for any reason, the handing over is delayed for reasons beyond the control of the contractor, in such case this payment will be released against commissioning certificate issued by the BHEL / customer and against submission of final bill of individual substation.

2.2 <u>For BOQ item no: - 46 to 49, 55 to 63, 73 to 75 & 77 (Supply in contractor's scope)</u>

2.2.1 80% of the contract item price on the monthly progressive bills on prorate basis after supply, receipt of the material at site, unloading, proper storage and as certified by site in charge.

2.2.2 10% of the contract item price on the monthly progressive bills on prorate basis after material erection as certified by BHEL site In-charge on prorate basis after erection.

2.2.3 Last 10% payment shall be released as per 2.1.6 above.

2.3 <u>For BOQ item No. 72 (Unloading)</u>

2.3.1 80% of the contract item price on the monthly progressive bills on prorate basis after receipt of the material at site, unloading, proper storage and as certified by site in charge.

2.3.2 10% of the contract item price on the monthly progressive bills on prorate basis after material erection as certified by BHEL site In-charge on prorate basis after erection.

2.3.3 Last 10% payment shall be released as per 2.1.6 above.

2.4 <u>For BOQ item no. 76 (Watch & Ward- Material Security)</u>

2.4.1 100% of the contract item price on the monthly progressive bills on pro rata basis towards watch & ward against submission of invoice and on certification of engineer in-charge of BHEL.

G. Clause No. B.16.3 shall be read in conjunction with the following

Extra works - Extra works that arise on account of contractor's fault will have to be carried out by the contractor free of cost including the supply of consumables etc.

After eligibility of extra works is established and finally accepted by BHEL Engineer/Designer, payment will be decided on the following rates

<u>Man-day rate for eligible extra works:</u>

Single man-day rate (for Skilled manpower & un-skilled manpower) for carrying out rework/repairs/rectification/fabrication and other such works for a man-day of 8 hours as may arise during the course of erection will be limited to minimum wages of skilled/ un-skilled manpower prevailing at the time of execution of the extra work as notified by the

state Government. Contractor has to submit notification published by the concerned state Govt. regarding minimum wage applicable for the period of execution of the extra work.

The above man day rate includes overtime if any, other site expenses and incidentals, consumables, tools and tackles etc.

As mentioned above, no payment will be made if an item of work lasts less than eight man hours.

H. **Overall price variation**- The individual quantity can vary to any extent or may be deleted for which no compensation will be payable to the contractor and **the rates will remain firm**. Also the rate of each item remains firm as long as the variation in the total value of work executed under the contract including extra items if any remains within plus/minus 30 percent of the contract value. In case the actual value of executed work including extra work on completion of work becomes less than 70% of the basic/original contract value than the following method shall be adopted.

The actual executed value shall be raised by 7 % (For arriving at the final payment against work executed) subject to the condition that total value of work executed plus increase by 7% as above shall be limited to 70% of the basic/original contract value. The rate quoted shall be firm irrespective of any upward variation in the contract price.

I. **Clause No. C.30.0 "INCOME TAX/SALES TAX/WORKS TAX/VAT" stands deleted. Now this clause shall be read as below.**

1. All taxes (except GST), duties, charges, royalties, cess and any other levies by Central/ State/local authorities for the execution of the contract shall be borne by the contractor and shall not be payable extra. Any increase of the same at any stage during execution of the contract shall be borne by the contractor. Quoted price of the same shall be inclusive of all such requirements.

2. Contractors have to make their own arrangement at their cost for completing the formalities, if required with relevant taxation authorities, for bringing their material, plant and machinery at site for the execution of the contract. Road permits / way bill if required shall be arranged by the contractor.

3. The Contractor is responsible to furnish documentary evidence towards GST Registration of the State wherein the site is located and any other documents as per GST Act which may be required from time to time by BHEL. BHEL will not be held to be responsible for any non-compliance of the Contractor in respect of GST laws as framed from time to time.

4. Goods and Service Tax (GST) will be reimbursed to the Contractor subject to the following conditions: -

   (i) Submission of valid GST Compliant Tax Invoice as per the GST Invoice Rules
   (ii) The Invoice raised by the Contractor should indicate the BHEL GST Registration Number.

5. The GST amount shall get reflected within prescribed time limit in the GSTN for BHEL to avail the input credit. If the GST Credit is reversed/ denied/ delayed to BHEL due to non-receipt/delayed receipt of Services and/or tax invoice or due to expiry of timeline prescribed in GST law or due to any other factor for availing such Input Tax Credit (ITC) or for any other reason arising out of the act directly attributable to the Contractor, GST amount shall be recoverable from Contractor from any dues payable to the Contractor along with any interest levied/ leviable on BHEL.

6. Statutory variation, if any, on account of GST will be payable by BHEL at actuals on submission of documentary evidence.
7. TDS under Income Tax Act/GST Act shall be deducted as per applicable rates unless Exemption certificate, if applicable, from the appropriate Authority is furnished to BHEL along with the Invoice.
8. **New Taxes & duties:**

   If any new tax or duty is levied by the Central/State Government/ Municipality/Local Authority and becomes directly applicable on items specified in the Bill of Quantities, full reimbursement shall be made subject to submission of documentation as per statute.

J. <u>DELAY AND EXTENSION OF TIME:</u>

If, in the opinion of the Engineer, the work is delayed

(i) by reason of abnormally bad weather, or

(ii) by reason of serious loss or damage by fire, or

(iii) by reason of civil commotion, local combination of workmen, strike or lockout, affecting any of the trades employed on the work, or

(iv) by delay on the part of the agency or tradesman engaged by the BHEL in executing work not forming part of the contract, or

(v) By reason of any other cause which in the absolute discretion of the Engineer is beyond the contractor's control, then in any such case, the Engineer (or higher authority) may make fair and reasonable extension in the completion dates of the individual items of work of the contract as whole. Such extension which will be communicated to the contractor by the Engineer in writing shall be final and binding on the contractor. No other claim in this respect for compensation, idle labour or otherwise howsoever is admissible. Upon the happening of any such event causing delay the contractor shall immediately give notice thereof in writing to the Engineer but shall nevertheless use constantly his best endeavour to prevent or make good the delay and shall do all that may reasonably be required to the satisfaction of the Engineer to proceed with the work.

(vi) In case of delay in completion of work BHEL reserve the right to grant time extension under the following options depending upon the performance of the vendor:

a. Time extension without levy of LD in case it is found that delay is not attributable to the vendor

b. Time extension with deduction of applicable LD in line with Liquidity Damage clause if the delay is solely attributable to the vendor.

c. In case facts of delay is not settled, BHEL reserve the right to grant provisional time extension for delay in completion of total work or part thereof and running/ interim payments to the vendor will be released without deduction of LD subject to submission of additional Bank guarantee equivalent to maximum LD amount valid till completion of work under their scope and grant of final time extension.

   During provisional time extension period ORC/ PVC shall not be payable to the contractor. The Final Delay analysis shall be prepared on completion of the work. In case

   of delay is not attributable to contractor as per final delay analysis the ORC/ PVC shall be released along with the final bill without any interest charges attributable to BHEL.

   In case of delay attributable to contractor, LD shall be deducted for that period in line with clause “Compensation/ LD/ Penalty for delay in execution” of conditions of contract and balance ORC/ PVC (if any) shall be released along with the final bill without any interest charges attributable to BHEL.

PVC/ ORC shall be governed by respective clauses in the NIT.

K. LD / PENALTY FOR DELAY IN EXECUTION:

The Clause No. C.5.0 "LD / Penalty for delay in execution" of Conditions of contract for ETC works stands deleted. Now the modified clause shall be read as below:

In case the contractor fails to complete the project within the time specified in the tender specification or any extension thereof subject to force majeure condition, the contractor shall be liable to pay by way of LD/Penalty a sum equal to the half percent of the contract price, per calendar week or part thereof by which the commissioning of the project is delayed, subject to ceiling of 10 % of the contract price along with applicable GST (if any) on LD. Once the maximum limit of delay is reached (i.e. 20 week of delay) BHEL may consider termination of the contract and forfeit the Security deposit without prejudice to the other remedies under the contract.

If the contract is for more than one sub-station and the substations are completed and taken over by customer in stages, then the delays if any by the contractor for the substation completed and handed over may be accounted for the individual substation and LD leviable shall be computed based on the contract value of individual substation.

Amended/ revised contract value (excluding ORC, Extra Works, and Supplementary/ Additional Items) shall be considered for calculating LD/ penalty

L. Model Conciliation Clause for Conducting Conciliation Proceedings Under The BHEL Conciliation Scheme, 2018

The Parties the if at any time (whether before, during or after the arbitral or judicial proceedings), any Disputes (which terms shall means and include any dispute, difference, question or disagreement arising in connection with construction, meaning, operation, effect, interpretation or breach of the agreement, contract or the Memorandum of Understanding (delete whichever is inapplicable), which the parties unable to settle mutually), arise inter-se the Parties, the same may, be refereed by either party to conciliation to be conducted through Independent Experts Committee to be appointed by competent authority of BHEL from the BHEL Panel of Conciliators.

Notes:

1. No serving or a retired employee of BHEL/Administrative Ministry of BHEL shall be included in the BHEL Panel of Conciliators.

2. Any other person(s) can be appointed as Conciliator(s) who is/are mutually agreeable to both the parties from outside the BHEL Panel of Conciliators.

The proceedings of Conciliation shall broadly be governed by Part-III of the Arbitration and Conciliation Act 1996 or any statutory modification thereof and as provided ***in Annexure-A*** to this GCC.

The Annexure-A together with it's appendices will be treated as if the same is part and parcel hereof and shall be as effectual as if set out herein in these GCC."

Guidelines for settlement of claims for compensation on accidents

The amount of compensation paid by BHEL under its guidelines on Settlement of claims for compensation on accidents as applicable for BHEL, **i.e. Rs.10,00,000/- (Rs Ten Lakh) in the event of death or permanent disability resulting from Loss of both limbs and `**

7,00,000/-(Rs Seven Lakh) in the event of permanent disability: shall be recoverable in full from the contractor, agency or firm, if the accident is attributable to negligence of contractor, agency or firm or any of its employees, except in case of work/ service contract etc. being of less than Rs. 5,00,000/- value, in which case the entire amount of compensation shall be borne by BHEL.

M. RIGHTS OF BHEL: - The Clause No. B.7.0 "RIGHTS of BHEL" of Conditions of contract for ETC works stands deleted. Now the modified clause shall be read as below: -

BHEL **reserves** the following rights in respect of this contract during the original contract period or its extensions if any, as per the provisions of the contract, without entitling the contractor for any compensation

N.7.1 To withdraw any portion of work (after due opportunity given to contractor to meet schedule**)** &/or to restrict/alter quantum of work as indicated in the contract during the progress of construction and get it done through other agency to suit BHEL's commitment to its customer or in case BHEL decides to advance the date of completion period due to other emergent reasons/BHEL's obligations to its customer.

N.7.2 To restrict or increase the quantity and nature of work to suit site requirements, since the tender specification is based on preliminary documents and quantities furnished therein are indicative and approximate. Quantity/ contract variation clause may also be read in conjunction with this clause.

N.7.3 To terminate the contract or to restrict the quantum of work and pay for the portion of work executed in case BHEL's contracts with its customer are terminated/ altered/ deferred/ disputed/on hold for any reason as per mutual agreement.

N.7.4 To effect recovery from any amounts due to the contractor under this or any other contract or in any other form, the moneys BHEL is statutorily forced to pay to anybody, due to contractor's failure to fulfill any of his obligations. BHEL shall levy overheads of 5% on all such payments.

N.7.5 While every endeavour will be made by BHEL to this end, they cannot guarantee uninterrupted work due to conditions beyond their control. The Contractor will not be normally entitled for any compensation/extra payment on this account unless otherwise specified elsewhere in the contract. No idle labour charges will be payable by BHEL in any case.

N.7.6 To deploy BHEL's skilled and unskilled workmen in case of emergency/poor progress/deficiency in skill on the part of the employees of the contractor and to recover the expenditure on account of the same from the moneys due to the contractor.

N.7.7 In event of termination of contract/ withdrawal/ the contractor shall have no claim to compensate for any loss sustained by him by reason of having purchase of any material or entered into agreement or made any advance on account of execution of work/ contract on account of any profit or advantage which he might have derived from the execution of the works in full but which he did not derive in consequence of the termination/ withdrawal of works.

N.7.8 In the event of any dispute of technical nature, the decision of BHEL shall be final and binding on the Contractor.

N.7.9 **Risk & Cost Clause**

In case of fault of the contractor, BHEL reserves the following rights without entitling the contractor for any compensation:

N.7.9.1 To terminate the contract or withdraw portion of work and get it done through other agency, at the risk and cost of the contractor after due notice **of a period of 14 days' by BHEL i**n any of the following cases:

i) Contractor's poor progress of the work vis-à-vis execution timeline as stipulated in the Contract, backlog attributable to contractor including unexecuted portion of work does not appear to be executable within balance available period considering its performance of execution.

ii) Withdrawal from or abandonment of the work by contractor before completion of the work as per contract.

iii) Non-completion of work by the Contractor within scheduled completion period as per Contract or as extended from time to time, for the reasons attributable to the contractor.

iv) Termination of Contract on account of any other reason (s) attributable to Contractor.

v) Assignment, transfer, subletting of Contract without BHEL's written permission.

vi) Non-compliance to any contractual condition or any other default attributable to Contractor.

N.7.9.2 **Risk & Cost Amount against Balance Work**:

Risk & Cost amount against balance work shall be calculated as follows:

Risk & Cost Amount= [(A-B) + (A x H/100)]

Where,

A= Value of Balance scope of Work (*) as per rates of new contract

B= Value of Balance scope of Work (*) as per rates of old contract being paid to the contractor at the time of termination of contract i.e. inclusive of PVC & ORC, if any.

H = Overhead Factor to be taken as 5

In case (A-B) is less than 0 (zero), value of (A-B) shall be taken as 0 (zero).

* Balance scope of work (in case of termination of contract):

Difference of Contract Quantities and Executed Quantities as on the date of issue of Letter for 'Termination of Contract', shall be taken as balance scope of Work for calculating risk & cost amount.

Contract quantities are the quantities as per original contract. If, Contract has been amended, quantities as per amended Contract shall be considered as Contract Quantities.

Items for which total quantities to be executed have exceeded the Contract Quantities based on drawings issued to contractor from time to time till issue of Termination letter, then for these items total Quantities as per issued drawings would be deemed to be contract quantities.

Substitute/ extra items whose rates have already been approved would form part of contract quantities for this purpose. Substitute/ extra items which have been executed but rates have not been approved, would also form part of contract quantities for this purpose and rates of such items shall be determined in line with contractual provisions.

However, increase in quantities on account of additional scope in new tender shall not be considered for this purpose.

NOTE: In case portion of work is being withdrawn at risk & cost of contractor instead of termination of contract, contract quantities pertaining to portion of work withdrawn shall be considered as 'Balance scope of work' for calculating Risk & Cost amount.

N.7.9.3 **LD against delay in executed work in case of Termination of Contract:**

LD against delay in executed work shall be calculated in line with LD clause of the contract, for the delay attributable to contractor. For limiting the maximum value of LD, contract value shall be taken as Executed Value of work till termination of contract.

Method for calculation of "LD against delay in executed work in case of termination of contract" is given below.

i) Let the time period from scheduled date of start of work till termination of contract excluding the period of Hold (if any) not attributable to contractor = T1

ii) Let the value of executed work till the time of termination of contract= X

iii) Let the Total Executable Value of work for which inputs/fronts were made available to contractor and were planned for execution till termination of contract = Y

iv) Delay in executed work attributable to contractor i.e. T2=[1-(X/Y)] x T1

v) LD shall be calculated in line with LD clause of the Contract for the delay attributable to contractor taking "X" as Contract Value and "T2" as period of delay attributable to contractor.

N.7.9.4 **Recoveries arising out of Risk & Cost and LD or any other recoveries due from Contractor**

Following sequence shall be applicable for recoveries from contractor after informing the contractor of the total proposed recovery:

a) Dues available in the form of Bills payable to contractor, SD, BGs against the same contract.
b) Demand notice for deposit of balance recovery amount to be sent to contractor, if funds are insufficient to effect complete recovery against dues indicated in (a) above.
c) If contractor fails to deposit the balance risk & cost amount within the period as prescribed in demand notice, following action shall be taken for balance recovery:

i) Dues payable to contractor against other contracts in the same Region/unit shall be considered for recovery.

ii) If recovery cannot be made out of dues payable to the contractor as above, balance amount to be recovered, shall be informed to other Regions/Units for

making recovery from the Unpaid Bills/Running Bills/SD/BGs/Final Bills of contractor.

iii) In-case recoveries are not possible with any of the above available options, Legal action shall be initiated for recovery against contractor.

N. The Clause No. B.15.0 "Arbitration" of Conditions of contract for ETC works stands deleted. Now the modified clause shall be read as below:

Except as provide elsewhere in this Contract, in case amicable settlement is not reached between the Parties, in respect of any dispute or difference; arising out of the formation, breach, termination, validity or execution of the contract; or, the respective rights and liabilities of the Parties; or, in relation to interpretation of any provision of the contract; or, in relation to interpretation of any provision of the Contract; or, in any manner touching upon the contract, then, either Party may, by a notice in writing to the other Party refer such dispute or difference to the sole arbitration of an arbitrator appointed by Head of the BHEL Unit/Region/Division issuing the Contract.

The Arbitrator shall pass a reasoned award and the award of the Arbitrator shall be final and binding upon the Parties.

Subject as aforesaid, the provisions of Arbitration and Conciliation Act 1996 (India) or statutory modifications or re-enactments thereof and the rules made thereunder and for the time being in force shall apply to the arbitration proceedings under this clause. The seat of arbitration shall be New Delhi.

The cost of arbitration shall be borne as per the award of the Arbitrator.

Subject to the arbitration in terms of clause L above, the court at New Delhi shall have exclusive jurisdiction over nay matter arising out of or in connection with this Contract.

Notwithstanding the existence or any dispute or differences and/or reference for the arbitration, the Contractor shall proceed with and continue without hindrance the performance of its obligations under this contract with due diligence and expedition in a professional manner except where the contract has been terminated by either Party in terms of this contract.

In the event of dispute or difference relating to the interpretation and application of the provisions of commercial contract(s) between Central Public Sector Enterprises (CPSEs)/ Port Trusts inter se and also between CPSEs and Government Departments/Organizations (excluding disputes concerning Railways, Income Tax, Customs & Excise Departments), such dispute or difference shall be taken up by either party for resolution through AMRCD as mentioned in DPE OM No.4(1)/2013-DPE9GM)/FTS-1835 dated 22.05.2018.

O. FACILITIES PROVIDED TO MSEs: -

Vide office memorandum F.No.21(8)/2011-MA dated 09.11.2016, Office of AS&DC, Ministry of MSME has issued clarification regarding definition of Goods and Services under the Public Procurement Policy of MSEs order-2012, In accordance with the Public Procurement Policy for MSEs order-2012 and OM regarding definition of Goods and Services issued by Ministry of MSME, it is clarified that benefits as envisaged in Public Procurement Policy for MSEs Order 2012 are to be provided in respect of the

procurements related to the Goods and Services produced and provided by Micro and Small Enterprises (MSEs) only and **no benefits is to be given in Case of Works Contracts.**

P. All other terms and conditions of tender shall remain unchanged.

PROFORMA OF BANK GUARANTEE (in lieu of SECURITY DEPOSIT)

In consideration of Bharat Heavy Electricals Limited (hereinafter referred to as the 'Employer' which expression shall unless repugnant to the context or meaning thereof, include its successors and permitted assigns) incorporated under the Companies Act, 1956 and having its registered office at BHEL House, Siri Fort, New Delhi-110049 through its Unit at BHEL, Transmission Business Group, Noida (name of the Unit) having agreed to exempt _____(Name of the Vendor / Contractor / Supplier) with its registered office at_____[1] (hereinafter called the said "Contractor" which term includes supplier), from demand under the terms and conditions of the Contract reference No._____ dated _____ [2] valued at Rs…….[3](Rupees ……) (hereinafter called the said Contract), of Security Deposit for the due fulfilment by the said Contractor of the terms and conditions contained in the said Contract, on production of a Bank Guarantee for Rs…….[4] (Rupees…….....only),

We _____(indicate the name and address of the Bank) having its Head Office at _____(address of the head Office) (hereinafter referred to as the Bank), at the request of _____ [Contractor(s)], being the Guarantor under this Guarantee, do hereby irrevocably and unconditionally undertake to forthwith and immediately pay to the Employer, an amount not exceeding Rs._____without any demur, immediately on demand from the Employer and without any reservation, protest, and recourse and without the Employer needing to prove or demonstrate reasons for its such demand

Any such demand made on the bank, shall be conclusive as regards the amount due and payable by the Bank under this guarantee. However, our liability under this guarantee shall be restricted to an amount not exceeding Rs._____.

We undertake to pay to the Employer any money so demanded notwithstanding any dispute or disputes raised by the Contractor(s) in any suit or proceeding pending before any Court or Tribunal or Arbitrator or any other authority, our liability under this present being absolute and unequivocal.

The payment so made by us under this guarantee shall be a valid discharge of our liability for payment hereunder and the Contractor(s) shall have no claim against us for making such payment.

We, further agree that the guarantee herein contained shall remain in full force and effect during the period that would be taken for the performance of the said Contract and that it shall continue to be enforceable till all the dues of the Employer under or by virtue of the said Contract have been fully paid and its claims satisfied & the Employer certifies that the terms and conditions of the said Contract have been fully and properly carried out by the said contractor(s) or acceptance of the final bill or discharge of this guarantee by the Employer, whichever is earlier. This guarantee shall initially remain in force up to and including_____[5] and shall be extended from time to time for such period as may be desired by the Employer. Unless a demand or claim under this guarantee is made on us in writing on or before the _____[6], (3 months more than the present date of validity of Bank Guarantee) we shall be discharged from all the liability under this guarantee thereafter.

We, _____ (indicate the name of the Bank) further agree with the Employer that the Employer shall have the fullest liberty without our consent and without affecting in any manner our obligations hereunder to vary any of the terms and conditions of the said Contract or to extend time of performance by the said contractor(s) from time to time or to postpone for any

time or from time to time any of the powers exercisable by the Employer against the said contractor(s) and to forbear or enforce any of the terms and conditions relating to the said Contract and we shall not be relieved from our liability by any reason of any such variation or extension being granted to the said contractor(s) or for any forbearance, act or omission on the part of the Employer or any indulgence by the Employer to the said contractor(s) or by any such matter or thing whatsoever which under the law relating to sureties would but for this provision have effect of so relieving us.

The Bank also agrees that the Employer at its option shall be entitled to enforce this Guarantee against the Bank as a principal debtor, in the first instance without proceeding against the Contractor and notwithstanding any security or other guarantee that the Employer may have in relation to the Contractor's liabilities.

This Guarantee shall not be determined or affected by liquidation or winding up, dissolution or change of constitution or insolvency of the Contractor but shall in all respects and for all purposes be binding and operative until payment of all money payable to the Employer in terms thereof. This guarantee will not be discharged due to the change in the constitution of the Bank or the Contractor(s).

We,……. BANK lastly undertake not to revoke this guarantee during its currency except with the previous consent of the Employer in writing.

Notwithstanding anything to the contrary contained hereinabove:

a) The liability of the Bank under this Guarantee shall not exceed…… [4]
b) This Guarantee shall be valid up to ……[5]
c) Unless the Bank is served a written claim or demand on or before _____[6] all rights under this guarantee shall be forfeited and the Bank shall be relieved and discharged from all liabilities under this guarantee irrespective of whether or not the original bank guarantee is returned to the Bank.

We, _____ Bank, have power to issue this Guarantee under law and the undersigned as a duly authorized person has full powers to sign this Guarantee on behalf of the Bank.

Date _____ Day of _____

for___(indicate the name of the Bank)__

(Signature of Authorised signatory)

[1] ADDRESS OF THE VENDOR /CONTRACTOR / SUPPLIER .
[2] DETAILS ABOUTTHE NOTICE OF AWARD/CONTRACTREFERENCE
[3] CONTRACT VALUE
[4] BG AMOUNTIN FIGURES AND WORDS
[5] VALIDITY DATE (At least 3 months more than completion period)
[6] DATE OF EXPIRY OF CLAIM PERIOD (At least 3 months more than the present date of validity of BG)

Notes:

1 The expiry of claim period shall be at least 3 months more than the validity date. It may be ensured that the same is in line with the agreement/ contract entered with the Vendor.

2 The BG should be on Non-Judicial Stamp paper/e-stamp paper of appropriate value as per Stamp Act prevailing in the State(s) where the BG is submitted or is to be acted upon or the rate prevailing in the State where the BG was executed, whichever is higher. The Stamp Paper/e-stamp paper shall be purchased in the name of Vendor/Contractor/Supplier /Bank issuing the guarantee.

3 In Case of Bank Guarantees submitted by Foreign Vendors:

a. From Nationalized/Public Sector / Private Sector/ Foreign Banks (BG issued by Branches in India) can be accepted subject to the condition that the Bank Guarantee should be enforceable in the town/city or at nearest branch where the Unit is located i.e. Demand can be presented at the Branch located in the town/city or at nearest branch where the Unit is located.

b. From Foreign Banks (wherein Foreign Vendors intend to provide BG from local branch of the Vendor country's Bank)

b.1 In such cases, in the Tender Enquiry/ Contract itself, it may be clearly specified that Bank Guarantee issued by **any of the Consortium Banks only** will be accepted by BHEL. As such, Foreign Vendor needs to make necessary arrangements for issuance of Counter- Guarantee by Foreign Bank in favour of the Indian Bank's (BHEL's Consortium Bank) branch in India. It is advisable that all charges for issuance of Bank Guarantee/ counter- Guarantee should be borne by the Foreign Vendor. The tender stipulation should clearly specify these requirements.

b.2 In case, Foreign Vendors intend to provide BG from Overseas Branch of our Consortium Bank (e.g. if a BG is to be issued by SBI Frankfurt), the same is acceptable. However, the procedure at sl.no. b.1 will required to be followed.

PROFORMA OF BANK GUARANTEE (in lieu of EARNEST MONEY if permissible in NIT)

(On non-Judicial paper of appropriate value)

Bank Guarantee No……

Date…….……

To,

M/s Bharat Heavy Electricals Limited
Transmission Business Group (TBG)
5th Floor, Advant Navis IT Business Park
Plot No. 7, Sector-142, Expressway Noida,
UP-201305

Dear Sirs,

In accordance with the terms and conditions of Invitation for Bids/Notice Inviting Tender No……[1](Tender Conditions), M/s …… having its registered office at ……[2] (hereinafter referred to as the 'Tenderer'), is submitting its bid for the work of …… ……[3] invited by M/s Bharat Heavy Electricals Limited through its Unit at BHEL, Transmission Business Group, Noida.

The Tender Conditions provide that the Tenderer shall pay a sum of Rs …… as Earnest Money Deposit in the form therein mentioned. The form of payment of Earnest Money Deposit includes Bank Guarantee executed by a Scheduled Bank.

In lieu of the stipulations contained in the aforesaid Tender Conditions that an irrevocable and unconditional Bank Guarantee against Earnest Money Deposit for an amount of Rs.....[4] is required to be submitted by the Tenderer as a condition precedent for participation in the said Tender and the Tenderer having approached us for giving the said Guarantee,

We, the…….....[Name & address of the Bank]

having our Registered Office at……..(hereinafter referred to as the Bank) being the Guarantor under this Guarantee, hereby irrevocably and unconditionally undertake to forthwith and immediately pay to the Employer without any demur, merely on your first demand any sum or sums of Rs. .....[4] (in words Rupees.....) without any reservation, protest, and recourse and without the beneficiary needing to prove or demonstrate reasons for its such demand.

Any such demand made on the Bank shall be conclusive as regards the amount due and payable by the Bank under this guarantee. However, our liability under this guarantee shall be restricted to an amount not exceeding Rs._____.

We undertake to pay to the Employer any money so demanded notwithstanding any dispute or disputes raised by the Vendor/Contractor/Supplier in any suit or proceeding pending before any Court or Tribunal, Arbitrator or any other authority, our liability under this present being absolute and unequivocal.

The payment so made by us under this Guarantee shall be a valid discharge of our liability for payment hereunder and the Tenderer shall have no claim against us for making such payment.

We ……. Bank further agree that the Employer shall have the fullest liberty without our consent and without affecting in any manner our obligations hereunder to vary any of the terms and conditions of the said Tender or to extend the time of submission of from time to time or to postpone for any time or from time to time any of the powers exercisable by the Employer against the said Tenderer and we shall not be relieved from our liability by reason of any such variation, or extension being granted to the said Tenderer or for any forbearance, act or omission on the part of the Employer or any indulgence by the Employer to the said Tenderer or by any such matter or thing whatsoever which under the law relating to sureties would but for this provision have effect of so relieving us.

The Bank also agrees that the Employer at its option shall be entitled to enforce this Guarantee against the Bank as a principal debtor, in the first instance without proceeding against the Tenderer and notwithstanding any security or other guarantee that the Employer may have in relation to the Tenderer's liabilities.

This Guarantee shall be irrevocable and shall remain in force upto and including…….[5] and shall be extended from time to time for such period as may be desired by the Employer.

This Guarantee shall not be determined or affected by liquidation or winding up, dissolution or change of constitution or insolvency of the Tenderer but shall in all respects and for all purposes be binding and operative until payment of all money payable to the Employer in terms hereof. However, unless a demand or claim under this Guarantee is made on us in writing on or before the ……. [6] we shall be discharged from all liabilities under this Guarantee.

We, …… Bank lastly undertake not to revoke this guarantee during its currency except with the previous consent of the Employer in writing.

Notwithstanding anything to the contrary contained hereinabove:

a) The liability of the Bank under this Guarantee shall not exceed…….[4]

b) This Guarantee shall be valid up to ……[5]

c) Unless the Bank is served a written claim or demand on or before _____[6] all rights under this guarantee shall be forfeited and the Bank shall be relieved and discharged from all liabilities under this guarantee irrespective of whether or not the original bank guarantee is returned to the Bank.

We, _____ Bank, have power to issue this Guarantee under law and the undersigned as a duly authorized person has full powers to sign this Guarantee on behalf of the Bank.

For and on behalf of

(Name of the Bank)

Date…….....……

Place of Issue…….

1 Details of the Invitation to Bid/Notice Inviting Tender
2 Name and Address of the Tenderer
3 Details of the Work
4 BG Amount in words and Figures

5 Validity Date (At least six months from date of tender opening)
6 Date of Expiry of Claim Period (At least 3 months more than the present date of validity of BG)

Note:

1 The Bank Guarantee should be valid for at least six months from date of tender opening. The expiry of claim period shall be at least 3 months more than the validity date. It may be ensured that the same is in line with the agreement/ contract entered with the Vendor.

2 The BG should be on Non-Judicial Stamp paper/e-stamp paper of appropriate value as per Stamp Act prevailing in the State(s) where the BG is submitted or is to be acted upon or the rate prevailing in the State where the BG was executed, whichever is higher. The Stamp Paper/e-stamp paper shall be purchased in the name of Vendor/Contractor/Supplier /Bank issuing the guarantee.

3 **In Case of Bank Guarantees submitted by Foreign Vendors-.**

a. **From Nationalized / Public Sector / Private Sector/ Foreign Banks (BG issued by Branches in India)** can be accepted subject to the condition that the Bank Guarantee should be enforceable in the town/city or at nearest branch where the Unit is located i.e. Demand can be presented at the Branch located in the town/city or at nearest branch where the Unit is located.

b. From Foreign Banks (wherein Foreign Vendors intend to provide BG from local branch of the Vendor country's Bank)

b.1 In such cases, in the Tender Enquiry/ Contract itself, it may be clearly specified that Bank Guarantee issued by **any of the Consortium Banks only** will be accepted by BHEL. As such, Foreign Vendor needs to make necessary arrangements for issuance of Counter- Guarantee by Foreign Bank in favour of the Indian Bank's (BHEL's Consortium Bank) branch in India. It is advisable that all charges for issuance of Bank Guarantee/ counter- Guarantee should be borne by the Foreign Vendor. The tender stipulation should clearly specify these requirements.

b.2 In case, Foreign Vendors intend to provide BG from Overseas Branch of our Consortium Bank (e.g. if a BG is to be issued by SBI Frankfurt), the same is acceptable. However, the procedure **at sl.no. b.1** will required to be followed.

b.3 The BG issued may preferably be subject to Uniform Rules for Demand Guarantees (URDG) 758 (as amended from time to time). The BG Format provided to them should clearly specify the same.

Annexure-A

ANNEXURE TO MODEL CONCILIATION CLAUSE FOR CONDUCT OF CONCILIATION UNDER THE BHEL CONCILIATION SCHEME, 2018

BRIEF PROCEDURE FOR CONDUCT OF CONCILIATION PROCEEDINGS

1. The proceedings of Conciliation shall broadly be governed by Part-III of the Arbitration and Conciliation Act 1996 or any statutory modification thereof and as provided herein:

2. The party desirous of resorting to Conciliation shall send an invitation/notice in writing to the other party to conciliate specifying all points of Disputes with details of the amount claimed. The party concerned shall not raise any new issue thereafter. Parties shall also not claim any interest on claims/counter-claims from the date of notice invoking Conciliation till the conclusion of the Conciliation proceedings.

3. The party receiving the invitation/notice for Conciliation shall within 30 days of receipt of the notice of Conciliation intimate its consent for Conciliation along with its counter-claims, if any.

4. The Conciliation in a matter involving claim or counter-claim (whichever is higher) up to Rs 5 crores shall be carried out by sole Conciliator nominated by BHEL while in a matter involving claim or counter-claim (whichever is higher) of more than Rs 5 crores Conciliation shall be carried out by 3 Conciliators nominated by BHEL.

5. The Parties shall be represented by only their duly authorized in-house executives/officers and neither Party shall be represented by a Lawyer.

6. The first meeting of the IEC shall be convened by the IEC by sending appropriate communication/notice to both the parties as soon as possible but not later than 30 days from the date of his/their appointment. The hearings in the Conciliation proceeding shall ordinarily be concluded within two (2) months and, in exceptional cases where parties have expressed willingness to settle the matter or there exists possibility of settlement in the matter, the proceedings may be extended by the IEC by a maximum of further 2 months with the consent of the Parties subject to cogent reasons being recorded in writing.

7. The IEC shall thereafter formulate recommendations for settlement of the Disputes supported by reasons at the earliest but in any case within

15 days from the date of conclusion of the last hearing. The recommendations so formulated along with the reasons shall be furnished by the IEC to both the Parties at the earliest but in any case within 1 month from the date of conclusion of the last hearing.

8. Response/modifications/suggestions of the Parties on the recommendations of the IEC are to be submitted to the IEC within time limit stipulated by the IEC but not more than 15 days from the date of receipt of the recommendations from the IEC.

9. In the event, upon consideration, further review of the recommendations is considered necessary, whether by BHEL or by the other Party, then, the matter can be remitted back to the IEC with request to reconsider the same in light of the issues projected by either/both the Parties and to submit its recommendations thereon within the following 15 days from the date of remitting of the case by either of the Parties.

10. Upon the recommendations by the Parties, with or without modifications, as considered necessary, the IEC shall be called upon to draw up the Draft Settlement Agreement in terms of the recommendations.

11. When a consensus can be arrived at between the parties only in regard to any one or some of the issues referred for Conciliation the draft Settlement Agreement shall be accordingly formulated in regard to the said Issue(s), and the said Settlement Agreement, if signed, by the parties, shall be valid only for the said issues. As regards the balance issues not settled, the parties may seek to resolve them further as per terms and conditions provided in the contract.

12. In case no settlement can be reached between the parties, the IEC shall by a written declaration, pronounce that the Conciliation between the parties has failed and is accordingly terminated.

13. Unless the Conciliation proceedings are terminated in terms of para 22 (b), (c) & (d) herein below, the IEC shall forward his/its recommendations as to possible terms of settlement within one (1) month from the date of last hearing. The date of first hearing of Conciliation shall be the starting date for calculating the period of 2 months.

14. In case of 3 members IEC, 2 members of IEC present will constitute a valid quorum for IEC and meeting can take place to proceed in the matter after seeking consent from the member who is not available. If necessary, videoconferencing may be arranged for facilitating participation of the members. However, the IEC recommendations will be signed by all members. Where there is more than one (1) Conciliator, as a general rule they shall act jointly. In the event of differences between the Members of IEC, the decision/recommendations of the majority of the Members of IEC shall prevail and be construed as the recommendation of the IEC.

15. The Draft Settlement Agreement prepared by the IEC in terms of the consensus arrived at during the Conciliation proceedings between the Parties shall be given by the IEC to both the parties for putting up for approval of their respective Competent Authority.

16. Before submitting the draft settlement agreement to BHEL's Competent Authority viz. the Board Level Committee on Alternative Dispute Resolution (BLCADR) for approval, concurrence of the other party's Competent Authority to the draft settlement agreement shall be obtained by the other party and informed to BHEL within 15 days of receipt of the final draft settlement agreement by it. Upon approval by the Competent Authority, the Settlement Agreement would thereafter be signed by the authorized representatives of both the Parties and authenticated by the members of the IEC.

17. In case the Draft Settlement Agreement is rejected by the Competent Authority of BHEL or the other Party, the Conciliation proceedings would stand terminated.

18. A Settlement Agreement shall contain a statement to the effect that each of the person(s) signing thereto (i) is fully authorized by the respective Party(ies) he/she represents, (ii) has fully understood the contents of the same and (iii) is signing on the same out of complete freewill and consent, without any pressure, undue influence.

19. The Settlement Agreement shall thereafter have the same legal status and effect as an arbitration award on agreed terms on the substance of the dispute rendered by an arbitral tribunal passed under section 30 of the Arbitration and Conciliation Act, 1996.

20. Acceptance of the Draft Settlement Agreement/recommendations of the Conciliator and/or signing of the Settlement Agreement by BHEL shall

however, be subject to withdrawal/closure of any arbitral and/or judicial proceedings initiated by the concerned Party in regard to such settled issues.

21. Unless otherwise provided for in the agreement, contract or the Memorandum of Understanding, as the case may be, in the event of likelihood of prolonged absence of the Conciliator or any member of IEC, for any reason/incapacity, the Competent Authority/Head of Unit/Division/Region/Business Group of BHEL may substitute the Conciliator or such member at any stage of the proceedings. Upon appointment of the substitute Conciliator(s), such reconstituted IEC may, with the consent of the Parties, proceed with further Conciliation into the matter either de-novo or from the stage already reached by the previous IEC before the substitution.

22. The proceedings of Conciliation under this Scheme may be terminated as follows:
    a. On the date of signing of the Settlement agreement by the Parties; or,
    b. By a written declaration of the IEC, after consultation with the parties, to the effect that further efforts at conciliation are no longer justified, on the date of the declaration; or,
    c. By a written declaration of the Parties addressed to the IEC to the effect that the Conciliation proceedings are terminated, on the date of the declaration; or,
    d. By a written declaration of a Party to the other Party and the IEC, if appointed, to the effect that the Conciliation proceedings are terminated, on the date of the declaration.
    e. On rejection of the Draft Settlement Agreement by the Competent Authority of BHEL or the other Party.

23. The Conciliator(s) shall be entitled to following fees and facilities:

Sl No	Particulars	Amount
1	Sitting fees	Each Member shall be paid a Lump Sum fee of Rs 75,000/- for the whole case payable in terms of paragraph No. 27 herein below.
2	Towards drafting of settlement agreement	In cases involving claim and/or counter-claim of up to Rs 5crores. Rs 50,000/- (Sole Conciliator)

Sl No	Particulars	Amount
		In cases involving claim and/or counter-claim of exceeding Rs 5 crores but less than Rs 10 crores. Rs 75,000 (per Conciliator) In cases involving claim and/or counter-claim of more than Rs 10 crores. Rs 1,00,000/- (per Conciliator) Note: The aforesaid fees for the drafting of the Settlement Agreement shall be paid on Signing of the Settlement Agreement after approval of the Competent Authority or Rejection of the proposed Settlement Agreement by the Competent Authority of BHEL.
3	Secretarial expenses	Rs 10,000/- (one time) for the whole case for Conciliation by a Sole Member IEC. Where Conciliation is by multi member Conciliators –Rs 30,000/- (one time)- to be paid to the IEC
4	Travel and transportation and stay at outstation i) Retired Senior Officials of other Public Sector Undertakings (pay scale wise equivalent to or more than E-8 level of BHEL)	As per entitlement of the equivalent officer (pay scale wise) in BHEL.
	Others	As per the extant entitlement of whole time Functional Directors in BHEL.

Sl No	Particulars	Amount
		Ordinarily, the IEC Member(s) would be entitled to travel by air Economy Class.
5	Venue for meeting	Unless otherwise agreed in the agreement, contract or the Memorandum of Understanding, as the case may be, the venue/seat of proceedings shall be the location of the concerned Unit / Division / Region / Business Group of BHEL. Without prejudice to the seat/venue of the Conciliation being at the location of concerned BHEL Unit / Division / Region / Business Group, the IEC after consulting the Parties may decide to hold the proceedings at any other place/venue to facilitate the proceedings. Unless, Parties agree to conduct Conciliation at BHEL premises, the venue is to be arranged by either Party alternately.

24. The parties will bear their own costs including cost of presenting their cases/evidence/witness(es)/expert(s)on their behalf. The parties agree to rely upon documentary evidence in support of their claims and not to bring any oral evidence in IEC proceedings.

25. If any witness(es) or expert(s) is/are, with the consent of the parties, called upon to appear at the instance of the IEC in connection with the matter, then, the costs towards such witness(es)/expert(s) shall be determined by the IEC with the consent of the Parties and the cost so determined shall be borne equally by the Parties.

26. The other expenditures/costs in connection with the Conciliation proceedings as well as the IEC's fees and expenses shall be shared by the Parties equally.

27. Out of the lump sum fees of Rs 75,000/- for Sitting Fees, 50% shall be payable after the first meeting of the IEC and the remaining 50% of the Sitting Fees shall be payable only after termination of the conciliation proceedings in terms of para 22 hereinabove.

28. The travelling, transportation and stay at outstation shall be arranged by concerned Unit as per entitlements as per Serial No. 3 of the Table at para 23 above, and in case such arrangements are not made by the BHEL Unit, the same shall be reimbursed to the IEC on actuals limited to their entitlement as per Serial No. 4 of the Table at Para 23 above against supporting documents. The IEC Member(s) shall submit necessary invoice for claiming the fees/reimbursements.

29. The Parties shall keep confidential all matters relating to the conciliation proceedings. Confidentiality shall extend also to the settlement agreement, except where its disclosure is necessary for purposes of its implementation and enforcement or as required by or under a law or as per directions of a Court/Governmental authority/ regulatory body, as the case may be.

30. The Parties shall not rely upon or introduce as evidence in any further arbitral or judicial proceedings, whether or not such proceedings relate to the Disputes that is the subject of the Conciliation proceedings:
    a. Views expressed or suggestions made by the other party in respect of a possible settlement of the Disputes;
    b. admissions made by the other party in the course of the Conciliator proceedings;
    c. proposals made by the Conciliator;
    d. The fact that the other Party had indicated his willingness to accept a proposal for settlement made by the Conciliator.

31. The Parties shall not present the Conciliator(s) as witness in any Alternative Dispute Resolution or Judicial proceedings in respect of a Disputes that is/was the subject of that particular Conciliation proceeding.

32. None of the Conciliators shall act as an arbitrator or as a representative or counsel of a Party in any arbitral or judicial proceeding in respect of a Disputes that is/was the subject of that particular Conciliation proceeding.

33. The Parties shall not initiate, during the Conciliation proceedings, any arbitral or judicial proceedings in respect of a Disputes that is the subject matter of the Conciliation proceedings except that a Party may initiate arbitral or judicial proceedings where, in his opinion, such proceedings are necessary for preserving his rights including for preventing expiry of period of limitation. Unless terminated as per the provisions of this Scheme, the Conciliation proceedings shall continue

notwithstanding the commencement of the arbitral or judicial proceedings and the arbitral or judicial proceedings shall be primarily for the purpose of preserving rights including preventing expiry of period of limitation.

34. The official language of Conciliation proceedings under this Scheme shall be English unless the Parties agree to some other language.

Format 2 to BHEL Conciliation Scheme, 2018

FORMAT FOR SEEKING CONSENT FOR REFERRING THE DISPUTES TO CONCILIATION THROUGH IEC

To,

M/s. (Stakeholder's name)

Sub: Resolution of the Disputes through conciliation by Independent Expert Committee (IEC).

Ref: Contract No/MoU/Agreement/LOI/LOA& date _____.

Sir,

With reference to above referred Contract/MoU/Agreement/LOI/LOA, you have raised certain Disputes/claims. Vide your letter dated____ you have requested BHEL to refer the Disputes/claims to IEC for Conciliation.

We are enclosing herewith Format (3) for giving consent and the terms and conditions of BHEL Conciliation Scheme, 2018 governing conciliation through IEC. You are requested to give your unconditional consent to the said terms and conditions of the Scheme by returning the same duly sealed and signed on each page. On receipt of your consent, matter will be put to the Competent Authority for consideration and decision.

Please note that BHEL has also certain claims against you (if applicable). BHEL reserves its right to agree or not to agree conciliation of the said disputes through BHEL and this letter is being issued without prejudice to BHEL's rights and contentions available under the contract and law.

Yours faithfully,

Representative of BHEL

Format 3 to BHEL Conciliation Scheme, 2018

FORMAT FOR GIVING CONSENT BY CONTRACTOR/VENDOR/CUSTOMER/COLLABORATOR/CONSORTIUM PARTNERSFOR REFERRING THE DISPUTES TO CONCILIATION THROUGH IEC

To,

BHEL

……

Sub: Resolution of Disputes through Conciliation by Independent Expert Committee (IEC).

Ref: Contract/MoU/Agreement/LOI/LOA No & date____

With reference to above referred contract, our following bills/invoices/claims submitted to BHEL are still unpaid giving rise to Disputes:

SL. no.	Claim Description	Bill submitted to BHEL (no. and date)	Amount of the bill/claim	Amount received from BHEL	Outstanding Amount

Accordingly we request you to kindly refer the Disputes in respect of above claims to IEC for Conciliation.

We hereby agree and give our unconditional consent to the terms and conditions of BHEL Conciliation Scheme, 2018 governing conciliation through IEC. We have signed the same on each page and enclosed it for your consideration.

Yours faithfully,

(Signature with stamp)

Authorized Representative of Contractor
Name, with designation
Date

Format 5 to BHEL Conciliation Scheme, 2018

STATEMENT OF CLAIMS/COUNTER CLAIMS TO BE SUBMITTED TO THE IEC BY BOTH THE PARTIES

1. Chronology of the Disputes

2. Brief of the Contract/MoU/Agreement/LOI/LOA

3. Brief history of the Disputes:

4. Issues:

5. Details of Clam(s)/Counter Claim(s):

SI. No.	**Description of claim(s)/Counter Claim**	**Amount (in INR)Or currency applicable in the contract**	**Relevant contract clause**

6. Basis/Ground of claim(s)/counter claim(s) (along with relevant clause of contract)

Note– *The Statement of Claims/Counter Claims may ideally be restricted to maximum limit of 20 pages. Relevant documents may be compiled and submitted along with the statement of Claims/Counter Claims. The statement of Claims/Counter Claims is to be submitted to all IEC members and to the other party by post as well as by email.*

BILL OF QUANTITY (Annexure -I)

Name of Project: LTHPL Teesta-VI HEP Project
Name of Work: ETC Works of LTHPL Teesta-VI H.E. Project

Sl. No.	Description of Item	Quantity	Unit	Unit Rate	Amount
1	220kV Generator Transformer Bay Module: GIS (220kV- 40kA for 1 sec) - Work shall include erection / installation, testing and commissioning of 220kV GIS including LCC panels. The supervision for ETC works shall be provided by OEM/ GIS manufacturer. Arrangement of special tools & tackles/ plants, and testing instrument shall be done by OEM/ BHEL on returnable basis, however, general tools & tackles/ plants, and testing instrument as per anenxure-A&B shall be under contractor's scope. The scope includes complete installation of GIS bays, including Surge Arrester, Transformer Connection Module/(s), associated Local Control Cabinet (LCC) and any other module, if applicable. Any other services required for ETC of complete GIS, walkways/ support structure, platforms, ladder, fixing of foundation bolts/ base frame, aligning, jointing, welding, fixing of embedded parts/ support plates in floors etc., which are required for installation of GIS, scaffolding, installation of cable trays on GIS modules, interconnecting cable laying / termination work from GIS to LCC and between LCC panels, SF6 Gas treatment, handling / filling / top-up etc complete in all respect. Any dismantling/ rework on account of ETC contractor scope before commissioning shall be in contractor's scope. Please refer notes and relevant technical specification/ drawings for additional details.	4	Set	₹ 1,09,931.57	₹ 4,39,726.28
2	220kV Line Feeder Bay Module: GIS (220kV- 40kA for 1 sec) Work shall include erection / installation, testing and commissioning of 220kV GIS including LCC panels. The supervision for ETC works shall be provided by OEM/ GIS manufacturer. Arrangement of special tools & tackles/ plants, and testing instrument shall be done by OEM/ BHEL on returnable basis, however, general tools & tackles/ plants, and testing instrument as per anenxure-A&B shall be under contractor's scope. The scope includes complete installation of GIS bays, including Surge Arrester, Cable Connection Module/(s), associated Local Control Cabinet (LCC) and any other module, if applicable. Any other services required for ETC of complete GIS, walkways/ support structure, platforms, ladder, fixing of foundation bolts/ base frame, aligning, jointing, welding, fixing of embedded parts/ support plates in floors etc., which are required for installation of GIS, scaffolding, installation of cable trays on GIS modules, interconnecting cable laying / termination work from GIS to LCC and between LCC panels, SF6 Gas treatment, handling / filling / top-up etc complete in all respect. Any dismantling/ rework on account of ETC contractor scope before commissioning shall be in contractor's scope. Please refer notes and relevant technical specification/ drawings for additional details.	2	Set	₹ 1,26,184.90	₹ 2,52,369.80
3	220kV Bus Bars: GIS (220kV- 40kA for 1 sec) Work shall include erection / installation, testing and commissioning of 220kV GIS including LCC panels. The supervision for ETC works shall be provided by OEM/ GIS manufacturer. Arrangement of special tools & tackles/ plants, and testing instrument shall be done by OEM/ BHEL on returnable basis, however, general tools & tackles/ plants, and testing instrument as per anenxure-A&B shall be under contractor's scope. The scope includes complete installation of GIS bays, including Surge Arrester, associated Local Control Cabinet (LCC) and any other module, if applicable. Any other services required for ETC of complete GIS, walkways/ support structure, platforms, ladder, fixing of foundation bolts/ base frame, aligning, jointing, welding, fixing of embedded parts/ support plates in floors etc., which are required for installation of GIS, scaffolding, installation of cable trays on GIS modules, interconnecting cable laying / termination work from GIS to LCC and between LCC panels, SF6 Gas treatment, handling / filling / top-up etc complete in all respect. Any dismantling/ rework on account of ETC contractor scope before commissioning shall be in contractor's scope. Please refer notes and relevant technical specification/ drawings for additional details.	2	Set	₹ 32,256.60	₹ 64,513.20
4	220kV Voltage Transformer module (for Busbars) GIS (220kV- 40kA for 1 sec) - Work shall include erection / installation, testing and commissioning of 220kV GIS including LCC panels. The supervision for ETC works shall be provided by OEM/ GIS manufacturer. Arrangement of special tools & tackles/ plants, and testing instrument shall be done by OEM/ BHEL on returnable basis, however, general tools & tackles/ plants, and testing instrument as per anenxure-A&B shall be under contractor's scope. The scope includes complete installation of GIS bays, including Surge Arrester, associated Local Control Cabinet (LCC) and any other module, if applicable. Any other services required for ETC of complete GIS, walkways/ support structure, platforms, ladder, fixing of foundation bolts/ base frame, aligning, jointing, welding, fixing of embedded parts/ support plates in floors etc., which are required for installation of GIS, scaffolding, installation of cable trays on GIS modules, interconnecting cable laying / termination work from GIS to LCC and between LCC panels, SF6 Gas treatment, handling / filling / top-up etc complete in all respect. Any dismantling/ rework on account of ETC contractor scope before commissioning shall be in contractor's scope. Please refer notes and relevant technical specification/ drawings for additional details.	2	Set	₹ 56,295.60	₹ 1,12,591.20
5	220kV Bus Coupler Bay Module: GIS (220kV- 40kA for 1 sec) Work shall include erection / installation, testing and commissioning of 220kV GIS including LCC panels. The supervision for ETC works shall be provided by OEM/ GIS manufacturer. Arrangement of special tools & tackles/ plants, and testing instrument shall be done by OEM/ BHEL on returnable basis, however, general tools & tackles/ plants, and testing instrument as per anenxure-A&B shall be under contractor's scope. The scope includes complete installation of GIS bays, including Surge Arrester, associated Local Control Cabinet (LCC) and any other module, if applicable. Any other services required for ETC of complete GIS, walkways/ support structure, platforms, ladder, fixing of foundation bolts/ base frame, aligning, jointing, welding, fixing of embedded parts/ support plates in floors etc., which are required for installation of GIS, scaffolding, installation of cable trays on GIS modules, interconnecting cable laying / termination work from GIS to LCC and between LCC panels, SF6 Gas treatment, handling / filling / top-up etc complete in all respect. Any dismantling/ rework on account of ETC contractor scope before commissioning shall be in contractor's scope. Please refer notes and relevant technical specification/ drawings for additional details.	1	Set	₹ 1,29,435.57	₹ 1,29,435.57
6	220kV Gas Insulated Bus Duct- GIS (220kV- 40kA for 1 sec) Work shall include erection / installation, testing and commissioning of 220kV GIB. The supervision for ETC works shall be provided by OEM/ GIS manufacturer. Arrangement of special tools & tackles/ plants, and testing instrument shall be done by OEM/ BHEL on returnable basis, however, general tools & tackles/ plants, and testing instrument as per anenxure-A&B shall be under contractor's scope. Any other services required for ETC of complete GIB, support structure, platforms, ladder, fixing of foundation bolts/ base frame, aligning, jointing, welding, fixing of embedded parts/ support plates in floors etc., which are required for installation of GIS, scaffolding, installation of cable trays/cables on GIB, interconnecting cable laying / termination work from GIB to LCC and between LCC panels, SF6 Gas treatment, handling / filling / top-up etc complete in all respect. Any dismantling/ rework on account of ETC contractor scope before commissioning shall be in contractor's scope. Please refer notes and relevant technical specification/ drawings for additional details.	750	m	₹ 591.04	₹ 4,43,280.00
7	PD Monitoring system for complete GIS - Work shall include erection/ installation/ cable laying/ termination, testing and commissioning of PD monitoring system complete in all respect. The supervision for ETC works shall be provided by OEM/ GIS manufacturer. Arrangement of special tools & tackles/ plants, and testing instrument shall be done by OEM/ BHEL on returnable basis, however, general tools & tackles/ plants, and testing instrument as per anenxure-A&B shall be under contractor's scope. Any dismantling/ rework on account of ETC contractor scope before commissioning shall be in contractor's scope. Please refer notes and relevant technical specification/ drawings for additional details.	1	Lot	₹ 12,563.24	₹ 12,563.24
8	Online gas monitoring system for complete GIS Work shall include erection/ installation/ cable laying/ termination, testing and commissioning of Online gas monitoring system complete in all respect. The supervision for ETC works shall be provided by OEM/ GIS manufacturer. Arrangement of special tools & tackles/ plants, and testing instrument shall be done by OEM/ BHEL on returnable basis, however, general tools & tackles/ plants, and testing instrument as per anenxure-A&B shall be under contractor's scope. Any dismantling/ rework on account of ETC contractor scope before commissioning shall be in contractor's scope. Please refer notes and relevant technical specification/ drawings for additional details.	1	Lot	₹ 56,534.57	₹ 56,534.57
9	Making holes of required dia (up to M32) in the GIS floor/ ceiling, Transformer Firewall, Transformer hall floor/ ceiling up to 8m or Control Room or Pothead yard, by drilling with diamond core cutter so as to make chemical anchoring. The supply of chemical anchor is in the scope of BHEL/ OEM.	500	No.	₹ 967.69	₹ 4,83,845.00

BILL OF QUANTITY (Annexure -I)

Name of Project: LTHPL Teesta-VI HEP Project
Name of Work: ETC Works of LTHPL Teesta-VI H.E. Project

Sl. No.	Description of Item	Quantity	Unit	Unit Rate	Amount
10	Making holes (up to 100mm dia) in the GIS floor/ ceiling, Transformer hall floor/ ceiling up to 8m or Control Room or Pothead yard, by drilling with diamond core cutter so as to make chemical anchoring. The supply of chemical anchor is in the scope of BHEL/ OEM.	50	No.	₹ 3,024.04	₹ 1,51,202.00
11	GIS (220kV - 40kA for 1 sec) HV Test for GIS - HV test kit shall be arranged by GIS Supplier. Test shall also be conducted by GIS supplier. However, All necessary support shall be provided by contractor i.e. unloading, shifting, minor assembling of HV test kit, support for complete HV Test, dismantling & loading on carrier, Complete in all respect.	1	Lot	₹ 1,32,985.89	₹ 1,32,985.89
12	GIS (220kV - 40kA for 1 sec) Grounding/ Earthing for GIS complete - including Gas Insulated Bus duct, LCC, SF6 to air bushing, using braided Cu wire (insulated/ non-insulated)/ earth strip (Cu/Al/GI flat). Work includes cutting, lug crimping, bolting, fixing, etc. and connecting with riser/ earth strip (GI/AL /Cu flat) complete in all respect. Grounding Material will be supplied by GIS Supplier /BHEL.	7	Bays	₹ 7,102.43	₹ 49,717.01
13	GIS (220kV - 40kA for 1 sec) Cabling between LCC and GIS including termination, ferruling, laying, dressing, tagging, etc. including arrangement of consumables etc. Cable shall be provided by GIS supplier/ BHEL.	7	Bays	₹ 13,002.65	₹ 91,018.55
14	220kV, 1 Ph, CVT complete with terminal connector without support structure	6	No.	₹ 7,926.09	₹ 47,556.54
15	220kV, 1 Ph, CT complete with terminal connector without support structure	6	No.	₹ 7,926.09	₹ 47,556.54
16	3 Ph, HDB Isolator, 2000 A, 40kA for 1s, mechanically ganged motor operated complete with 9 Nos. of 220kV support insulators & terminal connectors without support structure - with one earth switch mechanically ganged motor/ manual operated.	2	Set	₹ 24,425.10	₹ 48,850.20
17	220kV Class, 1 Phase, Gapless type Metal Oxide Surge Arrester complete with surge counter, leakage current meter, insulating base, connecting cable and terminal connectors. Surge Counter to be installed at a height of approx. 1.5m from FGL.	6	No.	₹ 3,352.50	₹ 20,115.00
18	220kV, 1 phase, 1mH, 2000A, 40kA for 1s, Pedestal/ Suspension type Wave Trap complete with 3 Nos. post insulators per WT with terminal connectors without support structure.	4	No.	₹ 9,028.76	₹ 36,115.04
19	220kV Post Insulators complete with terminal connectors without support structure.	2	No.	₹ 1,994.78	₹ 3,989.56
20	220kV Single Suspension string insulator (120 kN) assembly with 1x17 Nos. disc with all hardware accessories including grading Ring with Drop clamp set suitable for Quad Moose with 250mm sub conductor spacing	6	Set	₹ 1,994.78	₹ 11,968.68
21	GI Stranded Shield wire including tension clamp, PG clamp and clamping on structure for down conductor, fixing/ bolting with earth strip etc. to complete. Supply of Shield wire in ETC Contractor scope.	150	m	₹ 128.89	₹ 19,333.50
22	Conductor complete with Tee connectors for droppers to equipment connections, PG clamps for jumpering, Twin/ Quad spacers, etc. to complete.	1000	m	₹ 73.28	₹ 73,280.00
23	**415V, 3Ph, 4 wire, 63A, AC DISTRIBUTION BOARD -** Work complete in all respect as per following but not limited to, 1. The scope includes complete installation, testing and commissioning (ETC) of LT Switchgear and accessories, as applicable. 2. Any other services required for completion of ETC of Panel, fixing of support/ edge protection structure, earthing/ grounding work, internal cabling, etc. complete in all respect shall be in contractor's scope. 3. Any dismantling/ rework before commissioning shall be in also be in contractor's scope.	1	Set	₹ 68,564.61	₹ 68,564.61
24	**220V, 200A, 10kA (DC) DC DISTRIBUTION BOARD -** Work complete in all respect as per following but not limited to, 1. The scope includes complete installation, testing and commissioning (ETC) of LT Switchgear and accessories, as applicable. 2. Any other services required for completion of ETC of Panel, fixing of support/ edge protection structure, earthing/ grounding work, internal cabling, etc. complete in all respect shall be in contractor's scope. 3. Any dismantling/ rework before commissioning shall be in also be in contractor's scope.	1	Set	₹ 51,423.45	₹ 51,423.45
25	**220/48 V, 60A DC Converter with all accessories -** Work complete in all respect as per following but not limited to, 1. The scope includes complete installation, testing and commissioning (ETC) of LT Switchgear and accessories, as applicable. 2. Any other services required for completion of ETC of Panel, fixing of support/ edge protection structure, earthing/ grounding work, internal cabling, etc. complete in all respect shall be in contractor's scope. 3. Any dismantling/ rework before commissioning shall be in also be in contractor's scope.	2	Set	₹ 26,819.95	₹ 53,639.90
26	**48V, 63A, 10kA (DC) Distribution board (Misc. Board) -** Work complete in all respect as per following but not limited to, 1. The scope includes complete installation, testing and commissioning (ETC) of LT Switchgear and accessories, as applicable. 2. Any other services required for completion of ETC of Panel, fixing of support/ edge protection structure, earthing/ grounding work, internal cabling, etc. complete in all respect shall be in contractor's scope. 3. Any dismantling/ rework before commissioning shall be in also be in contractor's scope.	1	Set	₹ 38,697.55	₹ 38,697.55
27	**VT Junction Box (on foundation/structure) -** Work complete in all respect as per following but not limited to, 1. The scope includes complete installation, testing and commissioning (ETC), as applicable. 2. Any other services required for completion of ETC of Panel, fixing of support/ edge protection structure, earthing/ grounding work, internal cabling, etc. complete in all respect shall be in contractor's scope. 3. Any dismantling/ rework before commissioning shall be in also be in contractor's scope.	2	No.	₹ 2,441.93	₹ 4,883.86
28	CT Junction Box (on foundation/structure) Work complete in all respect as per following but not limited to, 1. The scope includes complete installation, testing and commissioning (ETC), as applicable. 2. Any other services required for completion of ETC of Panel, fixing of support/ edge protection structure, earthing/ grounding work, internal cabling, etc. complete in all respect shall be in contractor's scope. 3. Any dismantling/ rework before commissioning shall be in also be in contractor's scope.	2	No.	₹ 2,441.93	₹ 4,883.86
29	PLCC Equipments (at Sending End Station) - Coupling device (1set=2LMU +1BT) - (Testing and commissioning of PLCC Equipments in scope of panel supplier. Necessary manpower support, tools, tackles and testing equipment and including shifting/ loading/ unloading of equipments at Sending end in scope of ETC contractor).	2	Set	₹ 27,141.75	₹ 54,283.50
30	PLCC Equipments (at Receiving End Station) - Coupling device (1set=2LMU +1BT) - (Testing and commissioning of PLCC Equipments in scope of panel supplier. Necessary manpower support, tools, tackles and testing equipment and including shifting/ loading/ unloading of equipments to Receiving end in scope of ETC contractor).	2	Set	₹ 27,141.75	₹ 54,283.50
31	PLCC Equipments (at Sending End Station) - HF Cable - (Testing and commissioning of PLCC Equipments in scope of panel supplier. Necessary manpower support, tools, tackles and testing equipment and including shifting/ loading/ unloading of equipments at Sending end in scope of ETC contractor).	1000	m	₹ 13.13	₹ 13,130.00
32	PLCC Equipments (at Receiving End Station) - HF Cable - (Testing and commissioning of PLCC Equipments in scope of panel supplier. Necessary manpower support, tools, tackles and testing equipment and including shifting/ loading/ unloading of equipments to Receiving end in scope of ETC contractor).	1000	m	₹ 13.13	₹ 13,130.00
33	PLCC Equipments (at Sending End Station) - Analog PLCC Panels - (Testing and commissioning of PLCC Equipments in scope of panel supplier. Necessary manpower support, tools, tackles and testing equipment and including shifting/ loading/ unloading of equipments at Sending end in scope of ETC contractor).	5	No.	₹ 13,570.88	₹ 67,854.40
34	PLCC Equipments (at Receiving End Station) - Analog PLCC Panels - (Testing and commissioning of PLCC Equipments in scope of panel supplier. Necessary manpower support, tools, tackles and testing equipment and including shifting/ loading/ unloading of equipments to Receiving end in scope of ETC contractor).	5	No.	₹ 13,570.88	₹ 67,854.40
35	PLCC Equipments (at Sending End Station) - Express telephone instrument (Along with telephone wiring) - (Testing and commissioning of PLCC Equipments in scope of panel supplier. Necessary manpower support, tools, tackles and testing equipment and including shifting/ loading/ unloading of equipments at Sending end in scope of ETC contractor).	8	No.	₹ 131.30	₹ 1,050.40
36	PLCC Equipments (at Receiving End Station) - Express telephone instrument (Along with telephone wiring) - (Testing and commissioning of PLCC Equipments in scope of panel supplier. Necessary manpower support, tools, tackles and testing equipment and including shifting/ loading/ unloading of equipments to Receiving end in scope of ETC contractor).	8	No.	₹ 131.30	₹ 1,050.40

BILL OF QUANTITY (Annexure -I)

Name of Project: LTHPL Teesta-VI HEP Project
Name of Work: ETC Works of LTHPL Teesta-VI H.E. Project

Sl. No.	Description of Item	Quantity	Unit	Unit Rate	Amount
37	PLCC Equipments (at Sending End Station) - 5 pair telephone cables, armoured, 0.5sq.mm dia annealed copper conductor and petroleum jelly filled with polyethene outer jackets - (Testing and commissioning of PLCC Equipments in scope of panel supplier. Necessary manpower support, tools, tackles and testing equipment and including shifting/ loading/ unloading of equipments at Sending end in scope of ETC contractor).	500	m	₹ 13.13	₹ 6,565.00
38	PLCC Equipments (at Receiving End Station) - 5 pair telephone cables, armoured, 0.5sq.mm dia annealed copper conductor and petroleum jelly filled with polyethene outer jackets - (Testing and commissioning of PLCC Equipments in scope of panel supplier. Necessary manpower support, tools, tackles and testing equipment and including shifting/ loading/ unloading of equipments to Receiving end in scope of ETC contractor).	500	m	₹ 13.13	₹ 6,565.00
39	PLCC Equipments (at Sending End Station) - 2 pair telephone cable (Tinned Copper) - (Testing and commissioning of PLCC Equipments in scope of panel supplier. Necessary manpower support, tools, tackles and testing equipment and including shifting/ loading/ unloading of equipments at Sending end in scope of ETC contractor).	2000	m	₹ 13.13	₹ 26,260.00
40	PLCC Equipments (at Sending End Station) - EPAX along with all connecting cable (8 lines) - (Testing and commissioning of PLCC Equipments in scope of panel supplier. Necessary manpower support, tools, tackles and testing equipment and including shifting/ loading/ unloading of equipments at Sending end in scope of ETC contractor).	1	Set	₹ 6,564.66	₹ 6,564.66
41	PLCC Equipments (at Sending End Station) - 2 wire telephone instrument (Along with telephone wiring) - (Testing and commissioning of PLCC Equipments in scope of panel supplier. Necessary manpower support, tools, tackles and testing equipment and including shifting/ loading/ unloading of equipments at Sending end in scope of ETC contractor).	10	No.	₹ 131.30	₹ 1,313.00
42	LT Cabling 2C x 2.5 sq.mm HR-PVC/ Copper, Unarmoured Control Cables including laying, tagging , dressing, ferruling, Glanding, lugging ,soldering, tapping, jointing, crimping, termination, and drilling/ cutting holes in cable gland plates- laying can be either on trays, supports, underground, buried in ground or through GI/ PVC/ HDPE pipe over/ underground, through wall, on structure/ LM, etc. All erection materials viz. ferrules, copper lugs, cable ties/ straps, Al tags, markers, GI/ PVC wall sleeves with rubber/ nylon bushes and flexible steel conduits shall be supplied by bidder. Glands shall be quoted separately.	1000	m	₹ 14.71	₹ 14,710.00
43	LT Cabling10C x 2.5 sq.mm HR-PVC/ Copper, Unarmoured Control Cables including laying, tagging , dressing, ferruling, Glanding, lugging ,soldering, tapping, jointing, crimping, termination, and drilling/ cutting holes in cable gland plates- laying can be either on trays, supports, underground, buried in ground or through GI/ PVC/ HDPE pipe over/ underground, through wall, on structure/ LM, etc. All erection materials viz. ferrules, copper lugs, cable ties/ straps, Al tags, markers, GI/ PVC wall sleeves with rubber/ nylon bushes and flexible steel conduits shall be supplied by bidder. Glands shall be quoted separately.	1000	m	₹ 21.01	₹ 21,010.00
44	LT Cabling19C x 2.5 sq.mm HR-PVC/ Copper, Unarmoured Control Cables including laying, tagging , dressing, ferruling, Glanding, lugging ,soldering, tapping, jointing, crimping, termination, and drilling/ cutting holes in cable gland plates- laying can be either on trays, supports, underground, buried in ground or through GI/ PVC/ HDPE pipe over/ underground, through wall, on structure/ LM, etc. All erection materials viz. ferrules, copper lugs, cable ties/ straps, Al tags, markers, GI/ PVC wall sleeves with rubber/ nylon bushes and flexible steel conduits shall be supplied by bidder. Glands shall be quoted separately.	500	m	₹ 23.11	₹ 11,555.00
45	LT Cabling 4C x 6 sq.mm HR-PVC/ Copper, Unarmoured Auxiliary Power Cables including laying, tagging , dressing, ferruling, Glanding, lugging ,soldering, tapping, jointing, crimping, termination, and drilling/ cutting holes in cable gland plates- laying can be either on trays, supports, underground, buried in ground or through GI/ PVC/ HDPE pipe over/ underground, through wall, on structure/ LM, etc. All erection materials viz. ferrules, copper lugs, cable ties/ straps, Al tags, markers, GI/ PVC wall sleeves with rubber/ nylon bushes and flexible steel conduits shall be supplied by bidder. Glands shall be quoted separately.	5000	m	₹ 16.38	₹ 81,900.00
46	Supply of CABLE GLANDS - Cable glands shall be double compression type nickel plated (coating thickness not less than 10 microns) brass cable glands complete with necessary armour clamp and tapered washer, etc. for all power and control cables to provide dust and weather proof terminations. Cable glands shall match with the sizes of different HT/ LT/ Control cables. The cable glands shall conform to BIS: 6121. They shall comprise of heavy duty brass casting, machine finished and nickel plated, to avoid corrosion and oxidation. Rubber components used in cable glands shall be neoprene and of tested quality. Cable glands shall be of approved make. The quantity shown herewith is indicative only and shall change to any extend as per site requirements. Please refer notes and relevant technical specification for additional details. - 2C x 2.5 sq.mm PVC/ Copper, Armoured Control Cables	50	No.	₹ 210.09	₹ 10,504.50
47	Supply of CABLE GLANDS - Cable glands shall be double compression type nickel plated (coating thickness not less than 10 microns) brass cable glands complete with necessary armour clamp and tapered washer, etc. for all power and control cables to provide dust and weather proof terminations. Cable glands shall match with the sizes of different HT/ LT/ Control cables. The cable glands shall conform to BIS: 6121. They shall comprise of heavy duty brass casting, machine finished and nickel plated, to avoid corrosion and oxidation. Rubber components used in cable glands shall be neoprene and of tested quality. Cable glands shall be of approved make. The quantity shown herewith is indicative only and shall change to any extend as per site requirements. Please refer notes and relevant technical specification for additional details. - 10C x 2.5 sq.mm PVC/ Copper, Armoured Control Cables	50	No.	₹ 315.06	₹ 15,753.00
48	Supply of CABLE GLANDS - Cable glands shall be double compression type nickel plated (coating thickness not less than 10 microns) brass cable glands complete with necessary armour clamp and tapered washer, etc. for all power and control cables to provide dust and weather proof terminations. Cable glands shall match with the sizes of different HT/ LT/ Control cables. The cable glands shall conform to BIS: 6121. They shall comprise of heavy duty brass casting, machine finished and nickel plated, to avoid corrosion and oxidation. Rubber components used in cable glands shall be neoprene and of tested quality. Cable glands shall be of approved make. The quantity shown herewith is indicative only and shall change to any extend as per site requirements. Please refer notes and relevant technical specification for additional details. - 19C x 2.5 sq.mm PVC/ Copper, Armoured Control Cables	50	No.	₹ 341.12	₹ 17,056.00
49	Supply of CABLE GLANDS - 4C x 6 sq.mm HR-PVC/ Copper, Unarmoured Auxiliary Power Cables- Cable glands shall be double compression type nickel plated (coating thickness not less than 10 microns) brass cable glands complete with necessary armour clamp and tapered washer, etc. for all power and control cables to provide dust and weather proof terminations. Cable glands shall match with the sizes of different HT/ LT/ Control cables. The cable glands shall conform to BIS: 6121. They shall comprise of heavy duty brass casting, machine finished and nickel plated, to avoid corrosion and oxidation. Rubber components used in cable glands shall be neoprene and of tested quality. Cable glands shall be of approved make. The quantity shown herewith is indicative only and shall change to any extend as per site requirements. Please refer notes and relevant technical specification for additional details. - 4C x 6 sq.mm HR-PVC/ Copper, Unarmoured Auxiliary Power Cables	100	No.	₹ 318.45	₹ 31,845.00
50	Laying of Cable trays: Including bends, tees, elbow, reducers, stiffeners coupler plates, bolting to racks, structure, etc. to complete. Scope of minor fabrication is also involved. 100 to 150 mm wide, 2.5m long Perforated type	100	m	₹ 64.17	₹ 6,417.00
51	Laying of Cable trays: Including bends, tees, elbow, reducers, stiffeners coupler plates, bolting to racks, structure, etc. to complete. Scope of minor fabrication is also involved. 100 to 750 mm wide, 2.5m long Ladder type	100	m	₹ 51.96	₹ 5,196.00
52	Laying of Cable trays: Including bends, tees, elbow, reducers, stiffeners coupler plates, bolting to racks, structure, etc. to complete. Scope of minor fabrication is also involved. 100 to 750 mm wide, 2.5m long Perforated type	100	m	₹ 64.17	₹ 6,417.00
53	Hanger & Rack Assembly - This work includes fixing of hanger & rack assembly in GIS Hall/ Cable Tunnel/ Pothead yard, if required. Hanger and Rack assembly will be of 1/ 2/ 3 tier. This activity includes installation of hanger & rack assembly by welding/ fixing through anchor fastener/ insert plates, cutting, drilling, punching, minor civil works for carrying out the work in line with specification shall also be included in the scope and shall be of reputed make duly approved by Site in charge. Welding and application of protective primer/ zinc rich paint on welded surface, if required, is included in the scope. Supply of anchor fastener for fixing of hanger & rack assembly shall be in contractor's scope. Please refer notes and relevant technical specification/ drawings for additional details.	25	MT	₹ 31,515.28	₹ 7,87,882.00
54	Hanger and Rack assembly work includes welding/anchoring, as applicable of galvanized steel racks on inserts of ceiling/ floor in switchyard/ control room/ GIS Building. Hanger and Rack assembly will be of 1/ 2/ 3 tier. At 8m height in transformer floor ceiling as per drawing enclosed. Supply of the Anchor bolts shall be in scope of ETC contractor and shall be of reputed make duly approved by Site in charge. Any fabrication and modification/painting work required shall be in ETC contractor scope.	0.20	MT	₹ 31,516.30	₹ 6,303.26
55	Supply and Laying of GI conduits along with flexible conduit on cable racks/ at a depth of 300mm including excavation, backfilling, making and repairing of walls in trenches, cutting, threading, fixing of sockets/ bends where required, etc. complete. Both ends of GI conduits shall be closed by plastering. (Payment will be made for the as erected pipe length) GI pipe, 50 NB	50	m	₹ 601.47	₹ 30,073.50
56	Supply and Laying of GI conduits along with flexible conduit on cable racks/ at a depth of 300mm including excavation, backfilling, making and repairing of walls in trenches, cutting, threading, fixing of sockets/ bends where required, etc. complete. Both ends of GI conduits shall be closed by plastering. (Payment will be made for the as erected pipe length) GI Pipe, 100 NB	50	m	₹ 1,360.69	₹ 68,034.50
57	Supply and Laying of PVC pipes along with Sockets/bends on cable racks/ at a depth of 300mm including excavation, backfilling, making and repairing of walls in trenches, cutting, threading, fixing of sockets/ bends where required, etc. complete. Both ends of PVC conduits shall be closed by plastering. PVC pipe and accessories. (Payment will be made for the as erected pipe length) PVC pipe, 50 NB	100	m	₹ 178.98	₹ 17,898.00

BILL OF QUANTITY (Annexure -I)

Name of Project: LTHPL Teesta-VI HEP Project
Name of Work: ETC Works of LTHPL Teesta-VI H.E. Project

Sl. No.	Description of Item	Quantity	Unit	Unit Rate	Amount
58	Supply and Laying of PVC pipes along with Sockets/bends on cable racks/ at a depth of 300mm including excavation, backfilling, making and repairing of walls in trenches, cutting, threading, fixing of sockets/ bends where required, etc. complete. Both ends of PVC conduits shall be closed by plastering. PVC pipe and accessories shall be of Class-IV type. (Payment will be made for the as erected pipe length) PVC Pipe, 100 NB	200	m	₹ 361.56	₹ 72,312.00
59	Supply and Fixing of GI Pipes 50NB dia on Lattice/ Pipe Structure including clamping, fixing of sockets/ bends as required, etc. complete. The pipes shall be of medium grade as per IS 1239. It should be socketed at one end and threaded at both ends. Both ends of GI Pipes shall be closed by plastering. (Payment will be made for the as erected pipe length).	50	m	₹ 601.47	₹ 30,073.50
60	Supply and Fixing of GI Pipes 100NB dia on Lattice/ Pipe Structure including clamping, fixing of sockets/ bends as required, etc. complete. The pipes shall be of medium grade as per IS 1239. It should be socketed at one end and threaded at both ends Both ends of GI Pipes shall be closed by plastering. (Payment will be made for the as erected pipe length).	50	m	₹ 1,360.69	₹ 68,034.50
61	The Fire proof sealing/ fire stop system/ fire protection coating system required to prevent spreading of fire from one place to other place (or one zone to other zone) through the openings in wall/ floor, PVC pipe cutouts, cables laid in trays/ racks and openings below GIS building/ LT Switchgear room/ Control room, etc. Work statement shall be approved by BHEL/ Customer as per requirement. Materials shall be procured as per customer vendor list/ approval shall be obtained from BHEL/ customer before procurement. Supply and ETC of Fire sealing system preferably Mortar Seal is in Bidder scope.	20	sq.m	₹ 5,100.00	₹ 1,02,000.00
62	Supply & fixing of Panel Supporting Angles/ Channel/ Chequered Plate, etc. on cable trench/ panel cut-outs in Control Room/ GIS Hall and to raise the panel level.	5	MT	₹ 80,018.89	₹ 4,00,094.45
63	Supply and fixing of hooks for erection of GIS ducts below GIS floor/ GIS Hall/ Ventilation tunnel with chemical anchor. Tentative Length of the hooks shall be 100mm below the slab with 1 Ton (minimum) load bearing capacity. To be carried out as per CWR drawing. The supply of the chemical anchor is also in the scope of bidder.	40	No.	₹ 3,628.86	₹ 1,45,154.40
64	Structural Steel Work welded in built up sections like angles, channels & framed work, etc. including providing, cutting, hoisting, fixing in position with all complete - Galvanized steel lattice Structures including hardwares for equipment support	50	MT	₹ 5,105.06	₹ 2,55,253.00
65	Providing holes of following dia. In GI Structural Member like Angle & Plate (irrespective of size and thickness) for Erection of Tower, Beam & Equipment Support Structure: 13.5mm Dia hole for fixing of M12 Bolt- Quantity	10	No.	₹ 62.09	₹ 620.90
66	Providing holes of following dia. In GI Structural Member like Angle & Plate (irrespective of size and thickness) for Erection of Tower, Beam & Equipment Support Structure:17.5mm Dia hole for fixing of M16 Bolt- Quantity	10	No.	₹ 62.09	₹ 620.90
67	Providing holes of following dia. In GI Structural Member like Angle & Plate (irrespective of size and thickness) for Erection of Tower, Beam & Equipment Support Structure: 22mm dia hole for fixing of Stringing Hardware	10	No.	₹ 62.09	₹ 620.90
68	Providing holes of following dia. In GI Structural Member like Angle & Plate (irrespective of size and thickness) for Erection of Tower, Beam & Equipment Support Structure:28mm dia hole for fixing of Stringing Hardware	10	No.	₹ 62.09	₹ 620.90
69	Earthing works - 75 x 12 mm GI Flat - The earthing includes laying of earthmat grid in GIS floor and provide risers at various locations, earthing of all switchyard equipment, towers, structure, cable trenches, cable racks, fence, pipe electrode for LA, CVT, neutral of transformer & at interconnections of other grids, Control room equipments using necessary connectors for earthing flats. Earthing clamping shall be carried out by ETC contractor. GS strip including cutting, bending, welding with 40 mm dia MS rod riser/ earth strip, applying zinc rich paint, clamping to structure/ building wall, etc. to complete. Hardware required for connecting flat on pads of structure & equipment included in scope. The Earthing of equipments shall be carried out as per equipment earthing drg	13	MT	₹ 15,026.95	₹ 1,95,350.35
70	Earthing works - 50 x 6 mm GI Flat - The earthing includes earthing of all switchyard equipment, towers, pipe structure, cable trenches, fence, pipe electrode for LA, CVT, neutral of transformer & at interconnections of other grids, Control room equipments using necessary connectors for earthing flats. Earthing clamping shall be carried out by ETC contractor. GS strip including cutting, bending, welding with 40 mm dia MS rod riser/ earth strip, applying zinc rich paint, clamping to structure/ building wall, etc. to complete. Hardware required for connecting flat on pads of structure & equipment included in scope. The Earthing of equipments shall be carried out as per equipment earthing drg	2	MT	₹ 15,026.95	₹ 30,053.90
71	Laying of 40mm dia MS Rods at a depth of 600mm measured from the top of Finished Ground Level and bringing out risers just below gravel level near the equipment foundations as per requirement including following works: - excavation of trenches - laying of MS rod - welding of rods (refer Drg No. C/ENG/STD/EARTHINGS/09, SH-2&3 Rev 00 for Welding details of rods) - backfilling of soil for bringing out pig tail risers of 40 dia MS rod (approximately 1000) for equipments. Risers shall be raised from the earthmat (at 600mm depth) to 150mm above ground level to the nearest point of the equipment. This shall include all cutting, bending, welding, fixing, application of zinc rich paint on cutting surface, etc. to the main earth mesh. - any other work necessary to complete the laying of earthmat (40 mm dia MS rod will be supplied by BHEL)	22	MT	₹ 15,072.92	₹ 3,31,604.24
72	Unloading, storage & handing over of Essential/ Mandatory spares to Customer as per **Annexure-spares**	1	Lot	₹ 99,990.06	₹ 99,990.06
73	Supply & Mounting of Phase Color Discs, Danger Plate and Identification Plates for bays & Equipments as per IS:2551; 1982 & IS:5; 1978.	1	Lot	₹ 1,50,742.19	₹ 1,50,742.19
74	Supply of Equipment Fixing Hardware as per specification TB-XXX-618-002a -Bolts, Washers and Spring Washers. Size as per actual requirement	50	kg	₹ 102.33	₹ 5,116.50
75	INSULATION MAT: The scope covers supply and laying of insulating mats of "class A" conforming to IS: 15652-2006. These insulating mats shall be laid in front of all floor mounted AC and DC switchboards and control & relay panels located in control room building/ Switchyard panel room/ GIS LCC Panel, etc. Refer scope note for details	20	sq.m	₹ 1,962.13	₹ 39,242.60
76	Watch & ward of stored/ erected material at project site and storage area or any other locations as per instruction of site in charge. (Round the clock security by authorized service agency consisting of armed guard)	24	Per Post per Month	₹ 59,334.68	₹ 14,24,032.32
77	Supply and fixing of removable raised/ false flooring with system and its components of approved make for GIS floor, comprising of modular load bearing floor panels supported on G.I. rectangular stinger frame work and G.I. Pedestal, etc. all complete, as per the architectural drawings, or, as specified and as directed by Engineer-in-charge consisting of: A. Providing at required spacing to form modular framework, pedestals made out of GI tube of thickness minimum 2mm and 25mm outer diameter, fully welded on to the G.I. Base plate of size 100mm x 100mm x 3mm at the bottom of the pedestal tube, G.I. pedestal head of size 75mm x 75mm x 3.5mm welded with GI fully threaded stud 16mm outer diameter with two GI Check nuts screwed on the stud for level adjustment up to 50mm, locking and stabilizing the pedestal head in position at the required level. The pedestals shall be fixed to the subfloor (base) through base plate using epoxy based adhesive of approved make or the machine screw with rawl plug. B. Stringers system in all steel construction hot dipped galvanized of rectangular size 570 x 20 x 30 x 0.80mm thick having holes at both ends for securing the stringers on to the pedestal head using fully threaded screws ensuring maximum lateral stability in all directions, the grid formed by the pedestal and stringer assembly shall receive the floor panel, this system shall provide adequate solid, rigid support for access floor panel, the system shall provide a minimum clear uninterrupted clearance between the bottom of the floor for electrical conduits and wiring, etc. all complete as per the architectural drawings, as specified and as directed by the Engineer-in-charge. C. Providing and fixing Access Floor panel of 600 x 600 x 32mm medium grade Filled Steel anti-static high pressure Lamination of 800H grade (FS800H). Access Floor panel shall be steel welded construction with an enclosed bottom pan with uniform pattern of 64 hemispherical cones. The top and bottom plates of Steel Gauges: top 0.6mm and bottom 0.7mm fused spot welded together minimum 64 welds in each dome and 20 welds along each flange). The panel should be corrosion resistant epoxy coated for lifetime rust protection and cavity formed by the top and bottom plate is filled with Pyrogrip non-combustible Portland cementitious core mixed with lightweight foaming compound. The access floor shall be factory finished with Anti-static High Pressure laminate with Non Warp technology up to 1mm thickness for superior adhesion and Surface flatness within 0.75mm. The panel is to withstand a Concentrated Load of 363 kgs applied on area 25mm x 25mm without collapse in the centre of the panel which is placed on four steel blocks. The panel will withstand and Uniformly Distributed Load (UDL) minimum 1250 kg/sq.m and, an impact load of 50kg all complete as per the approved manufacturers specification and as per the direction of Engineer-in-charge. All specification must be printed on the side of the panel to ensure the quality of the product. - up to 300 mm Finished Floor Height (FFH)	20	sq.m	₹ 8,500.00	₹ 1,70,000.00
				Grand Total (Excluding GST)	**₹ 79,24,637.23**

Validate Print Help

Percentage BoQ

Tender Inviting Authority: BHEL, TBG- SubContracting Department, Sector 16 A, Noida, UP

Name of Work: RECEIPT OF EQUIPMENT/MATERIAL AT SITE, UNLOADING, RECONCILIATION, INSPECTION, VERIFICATION, STORAGE, UP-KEEPING DURING STORAGE, ERECTION, TESTING, COMMISSIONING AND HANDING OVER OF 245KV GIS AND POTHEAD YARD, LTHPCL TEESTA-VI H. E. PROJECT IN SIKKIM.

Contract No: TBSM/TEESTA VI/ETC/TENDER/22-23 DATE 16.01.2023

Name of the Bidder/ Bidding Firm / Company :						
PRICE SCHEDULE **(This BOQ template must not be modified/replaced by the bidder and the same should be uploaded after filling the relevent columns, else the bidder is liable to be rejected for this tender. Bidders are allowed to enter the Bidder Name and Values only)**						
NUMBER #	**TEXT #**	**NUMBER #**	**TEXT #**	**NUMBER**	**NUMBER #**	**TEXT #**
Sl. No.	**Item Description**	**Quantity**	**Units**	**Estimated Rate in Rs. P**	**TOTAL AMOUNT Without Taxes in Rs. P**	**TOTAL AMOUNT In Words**
1	**2**	**4**	**5**	**6**	**53**	**55**
1	Total amount as per rates in BOQ (as per Annexure-I) for "RECEIPT OF EQUIPMENT/MATERIAL AT SITE, UNLOADING, RECONCILIATION, INSPECTION, VERIFICATION, STORAGE, UP-KEEPING DURING STORAGE, ERECTION, TESTING, COMMISSIONING AND HANDING OVER OF 245KV GIS AND POTHEAD YARD, LTHPCL TEESTA-VI H. E. PROJECT IN SIKKIM."	1.000	Nos	**7924637.23**	**7924637.23**	INR Seventy Nine Lakh Twenty Four Thousand Six Hundred & Thirty Seven and Paise Twenty Three Only
Total in Figures					**7924637.23**	INR Seventy Nine Lakh Twenty Four Thousand Six Hundred & Thirty Seven and Paise Twenty Three Only
Quoted Rate in Figures			**Select**		**0.000**	INR Zero Only
Quoted Rate in Words		**INR Zero Only**				

Project : LTHPL Teesta-VI HEP Project
Customer : LTHPL

LIST OF ENCLOSED DRAWINGS / DOCUMENTS

S. No.	Document	Document Reference
1	MANDATORY SPARE LIST	ANNEXURE- SPARES
2	STANDARD SCOPE NOTE FOR E.T.C. WORKS	ETC-BOQ/GIS/NOTE.1
3	PROJECT SPECIFIC SCOPE NOTE FOR E.T.C. WORKS	ETC-BOQ/GIS/NOTE.2
4	Installation Tools for GIS erection (to be arranged by bidder on returnable basis)	ANNEXURE-A
5	Testing and Commissioning Tools for GIS erection (to be arranged by Bidder on returnable basis)	ANNEXURE-B
6	Single line diagram of 220kV GIS and Pothead Yard	TB-3-415-510-001, Rev 01
7	Layout plan & section drawing for 220kV GIS	TB-DG-415-316-402(3), Rev 04
8	Auxilliary SLD FOR LT DISTRIBUTION BOARDS	TB-3-415-316-004, Rev 01
9	Erection Key Diagram and BOQ-Clamps and Connectors	TB-2-415-316-005, Rev 01
10	Layout (Plan and Section) of 220kV Pothead yard	TB-2-415-316-002, Rev 02
11	Technical specification for Hardware	TB-xxx-618-002a
12	Gas SLD	TB-DG-415-316-402(4), Rev 04
13	Equipment Earthing Details	Preliminary drawings enclosed
14	Cable and Rack Layout for 220kV XLPE Cable Tunnel	Tentative drawings enclosed
15	Earthmat layout of Pothead Yard	TB-2-415-316-008, Rev 02
16	Civil Drawing - Cable Tunnel	Latest drawings enclosed
17	Civil Drawing - Transformer and GIS Hall	Latest drawings enclosed

Notes:

1. Enclosed drawings / documents are provisional and subject to revision during contract stage.
2. Earthing Layout for GIS - Grid with tentative spacing of 3m to be laid on GIS floor
3. Equipment earthing details and GIS layout are tentative and subject to change as per requirement.

ANNEXURE-SPARES

Project : LTHPL Teesta-VI HEP Project
Customer : LTHPL
Consultant : NHPC

	Breakup of Mandatory Spares		
S. No.	**Item Description**	**Unit**	**Qty.**
A.	**Spares for 220kV GIS**		
1	**GIS Spares List**		
1.1	Spare SF6 gas required for the complete GIS (1 Lot 10% of the total quantity in 40/50 kg cylinders)	Lot	1
1.2	Complete circuit breaker with operating mechanism for 1 pole in a sealed packing with provision monitoring gas pressure/ Vacuum	No	1
1.3	Complete disconnector switch with operating mechanism, cone and enclosure for 1 pole in a sealed packing with provision of monitoring gas pressure/Vacuum (1 Set 1 no for each type)	Set	1
1.4	Complete earthing switch with operating mechanism, cone and enclosure for 1 pole in a sealed packing with provision of monitoring gas pressure/Vacuum	No	1
1.5	Complete high speed earthing switch with operating mechanism, cone and enclosure for 1 pole in a sealed packing with provision of monitoring gas pressure/ Vacuum	No	1
1.6	Tripping coil for Circuit Breaker	No	6
1.7	Closing coil for Circuit Breaker	No	6
1.8	Rupture disc complete assembly including replacement kit. (1 Set 2 nos. for each compartment)	Set	1
1.9	Sealing / O ring / Gaskets (1 Set Required for one Bay)	Set	1
1.10	Local Control Cabinet - MCB, fuses, time relay, auxiliary relay, indicating lamp, resistors, limit switches, contactor and terminals (1 Set Required for one Bay)	Set	1
1.11	SF6 filling valve for circuit breaker zone	No	2
1.12	SF6 filling valve for other zones (excluding circuit breaker zone)	No	2
1.13	Gas density/ pressure measurement and monitoring -input output and processing cards (1 Set Required for one Bay)	Set	1
1.14	Gas density/ Pressure transmitter	No	2
1.15	HMI for gas monitoring and PD system	No	1
1.16	Insulating cone (1 Set 2 nos. of each type used)	Set	1
1.17	Observation window	No	2
1.18	UHF coupler for PD measurement	No	6
1.19	Multi core Current Transformers module (1 Set 2 nos. of each type used)	Set	1
1.20	Voltage/Potential Transformer module	No	2
1.21	Corona Shield	No	1
1.22	Surge Arrestor	No	2
2	**Supply: Special Tools**		
2.1	Handling devices and Tools for bays	Set	1
2.2	Handling devices and Tools for equipments	Set	1
2.3	Gas leakage detector	Nos	1
2.4	Endoscope	Nos	1
2.5	Control kit for density switch threshold	Nos	1
2.6	SF6 pressure control and measuring set (Digital)	Nos	2
2.7	Tools for Gas handling	Set	1
2.8	Gas processing and filling unit	Set	1
2.9	Any other special tools and tackles required for proper maintenance of GIS units has to be supplied by the bidder	Set	1
3	**Supply: Testing Instruments**		
3.1	SF6 gas multi analyser kit	Nos	1
3.2	Portable Vaccum meter with probes	Nos	1
3.3	Contact Thermometer	Nos	1

Project : LTHPL Teesta-VI HEP Project
Customer : LTHPL
Consultant : NHPC

	Breakup of Mandatory Spares		
3.4	CB Operation analyser kit (alongwith DCRM kit)	Nos	1
B.	**220kV XLPE Cable**		
1	**XLPE Cable Spare List**		
1.1	High Voltage Power Cable : Surge Arrestor (Sheath Voltage Limiter) for 220kV XLPE Cable	Nos	3
1.2	High Voltage Power Cable : XLPE Insulated, Copper (Plain) conductor, PE with HFFR layer outer sheath 127/220kV Single core, 2000 sqmm. size	m	350
1.3	High Voltage Power Cable : Copper (Plain) conductor, straight through joint suitable for 127/220kV, 2000 sqmm. size	Nos	2
1.4	High Voltage Power Cable : Indoor termination kit for GIS end (Oil filled) suitable for 127/220kV XLPE, 2000 sqmm. size	Nos	2
1.5	High Voltage Power Cable : Outdoor termination kit for interconnection with Pothead yard suitable for 127/220kV, 2000 sqmm. size	Nos	2
1.6	High Voltage Power Cable : Disconnecting link box, Single phase	Nos	3
1.7	Voltage Power Cable : Disconnecting link box, Three phase	Nos	1
C.	**Pothead Yard Equipment (AIS)**		
1	**Surge Arrester**		
1.1	10kA Nominal Discharge, 25mm/kV Creepage, 216kV Single phase, Gapless (ZnO) Surge Arrester Complete with all accessories (Corona Ring [If Applicable], Insulating Base, Lugs, Fixing & Earthing Hardware Etc.) except Terminal connector, insulated connecting cable & Surge Counter.	Nos.	1
2	**Capacitor Voltage Transformer**		
2.1	220kV CVT complete with accessories excluding connector	Nos.	1
3	**Wave Trap**		
3.1	220kV, 1600A ,1.0mH, 50kA for 1 Sec,1ph Wave Trap excluding insulators and structure	Nos.	1
4	**Current Transformer**		
4.1	220kV CT complete with accessories excluding connector	Nos.	1
5	**Disconnector with Earth Switch**		
5.1	Complete Drive mechanism including motor for Disconnector and Earth Switch (Of Each Type)	Nos.	1
6	**ACSR Moose Conductor**		
6.1	Moose Conductor (% of installed capacity)	%	10
7	**Clamps and Connectors**		
7.1	Clamps and Connectors (Set - 1 No. of each type used)	Set	1
8	**Disc Insulator**		
8.1	Disc Insulator	Nos.	24
9	**Hardware fittings and fasteners**		
9.1	Hardware fittings, fasteners (1 Set - 1 no. of each type used)	Set	3
10	**Special Tools**		
10.1	Telescopic extension piece type earthing rod suitable for 245 kV tested for making capacity	Nos.	3
10.2	Infrared thermometer	Nos.	1

Project : LTHPL Teesta-VI HEP Project
Customer : LTHPL
Consultant : NHPC

	Breakup of Mandatory Spares		
D.	**Secondary System**		
1	**PLCC for 2 Lines (For Teesta-VI HEP S/S)**		
1.1	Power supply module for PLCC panels	Nos.	2
1.2	Other Electronic cards of each type used in PLCC panels	Set	1
1.3	Teleprotection Coupler	Nos.	1
1.4	Modem	Nos.	1
1.5	Other cards of each type used for telephone exchanges	Set	1
1.6	Express telephones for direct voice communication	Nos.	2
2	**L.T. Switchgear**	Lot	1
2.1	Spares-220V DC Distribution Board		
2.2	Spares-48V DC Distribution Board		
2.3	Spares-Misc. Board (Pothead Yard)		

Project:	**LTHPL Teesta-VI HEP Project**
Customer:	**LTHPL**
Doc No:	**ETC-BOQ/GIS/NOTE.1 Rev.0**
Title:	**SCOPE NOTE 1 - STANDARD SCOPE NOTE FOR E.T.C. WORKS**
Sr No.	PARTICULARS
1.1	Individual item may vary up-to any extent and even may get deleted, however overall contract value may vary +/-30%. Variation will be valid up-to contract stage.
1.2	Loading/Unloading, handling and shifting of material at site, proper stacking, assembly, installation, pre-commissioning test and commissioning tests (as per BHEL / Customer FQP) are included in the scope. Scope includes loading / unloading of the material from truck/trailor at site with Hydra/crane e.t.c. complete in all respect. All T&P including hyrda / crane is in bidder's scope.
1.3	Bidder Supplied Material - Bidder (ETC contractor) to supply material of proven design and make, which have already been extensively used and tested (as applicable). Bidder to obtain approval from BHEL Engineer incharge / Customer prior to supply.
1.4	Following documents will be required for billing of supplied items:
	Lorry receipt (LR), Tax invoice
1.5	**Supply of Insulating mats:** The scope covers supply and laying of insulating mats of “class A” conforming to IS: 15652-2006. These insulating mats shall be laid in front of all floor mounted AC and DC switchboards and control & relay panels located in control room building/ Switchyard panel room / GIS LCC Panel e.t.c. The insulating mats shall be made of elastomer material free from any insertions leading to deterioration of insulating properties. It shall be resistant to acid, oil and low temperature. Upper surface of the insulating mats shall have small aberration (rough surface without edges) to avoid slippery effects while the lower surface shall be plain or could be finished slip resistant without affecting adversely the dielectric property of the mat. Insulating mat (wherever applicable) shall be of pastable type, to be fixed permanently on the front and rear side of the panels except for the chequered plate area which shall not be pasted as per requirement. The insulating mats shall generally be fixed and joints shall be welded as per recommendations in Annexure-A of IS: 15652. Width of insulating mats shall generally be of 1.5 meters or as per site requirements. Length shall be supplied as per site requirements. The insulating mats offered shall conform to IS: 15652-2006.

Project:	**LTHPL Teesta-VI HEP Project**
Customer:	**LTHPL**
Doc No:	**ETC-BOQ/GIS/NOTE.1 Rev.0**
Title:	**SCOPE NOTE 1 - STANDARD SCOPE NOTE FOR E.T.C. WORKS**
Sr No.	PARTICULARS
1.6	**SUPPLY OF CABLE TAGS AND MARKERS** Each cable and conduit run shall be tagged with numbers that appear in the cable and conduit schedule. The tag shall be of aluminium with the number punched on it and securely attached to the cable conduit by not less than two turns of 20 SWG GI wire conforming to IS:280. Cable tags shall be of rectangular shape for power cables and of circular shape for control cables. Location of cables laid directly underground shall be clearly indicated with cable route marker made of galvanised iron plate. Location of underground cable joints shall be indicated with cable route marker with an additional inscription “Cable joints”. The cable route marker shall project 150 mm above ground and shall be spaced at an interval of 30 meters and at every change in direction. They shall be located on both sides of road and drain crossings as per relevant standard. Cable tags shall be provided on all cables at each end (just before entering the equipment enclosure), on both sides of a wall or floor crossing, on each duct/conduit entry and at each end & turning point in cable tray/trench runs. Cable tags shall be provided inside the switchgear, motor control centres, control and relay panels etc., wherever required for cable identification, where a number of cables enter together through a gland plate.
1.7	Supply of HV test kit is in scope of GIS Supplier
1.8	All the drawings and documents enclosed as per note or refered elsewhere shall be followed for ETC work.
1.9	Minor Civil works such as modification of civil foundations, making foundations for JB/Panel/MK etc, making holes in the trenches/ wall/ ceiling of building, chipping work, grouting work, fixing of trench material will be in the scope of ETC contractor. Drilling/making holes in concrete slab with diamond hole cutter is in contractor scope.
1.10	Any cutting of masonary / concrete work, which is necessary shall be done by the contractor at his own cost and shall be made good to match the original work.
1.11	All final adjustment of foundation levels, chipping and dressing of foundation surfaces, setting and grounding of anchor bolts, sills, inserts and fastening devices shall be carried out by the contractor including minor modification of civil works as may be required for erection.
1.12	Wall openings at suitable locations for ventilation fans shall be made by the bidder. Civil works such as **grouting, filling up of crevices/ cut outs** etc. during installation of equipment shall also be in bidder's scope. Any other damage caused to civil works during ETC work of the equipment/ system shall be made good to the original finish by the bidder at no extra cost to the BHEL.
1.13	Removal of gravel, if gravelling is already done, for connection of Equipment earthing strip to the existing mat (wherever earthing mat is already laid), and after completion of earthing, contractor should place the gravel to bring it in original shape.
1.14	Quoted rates are deemed to be inclusive of miscellaneous works viz erection of clamps and connectors / other accessories of individual equipment.
1.15	All paint , welding electrodes & other consumable by contract supplies shall be part of ETC works. Paint /welding electrode make etc. is subject to BHEL/CUSTOMER approval.
1.16	All the phases are to be identified by painting the structures Red, Yellow and Blue by reflecting colour as per as built condition. Phase identification colour is to be provided around the top of the structure with colour band of 100 mm width at a height of approximately 2000mm from the finished ground level.

Project:	**LTHPL Teesta-VI HEP Project**
Customer:	**LTHPL**
Doc No:	**ETC-BOQ/GIS/NOTE.1 Rev.0**
Title:	**SCOPE NOTE 1 - STANDARD SCOPE NOTE FOR E.T.C. WORKS**
Sr No.	PARTICULARS
1.17	All ground connections shall be made by electric arc welding. All welded joints shall be allowed to cool down gradually to atmospheric temperature before putting any load on it. All arc welding with large dia. conductors shall be done with low hydrogen content electrodes.
1.18	Equipment erection (say Surge Arrestor) means complete erection, metallics, connectors (expansion/rigid tubular for Al.Tube / single/double/quadraple conductor), connection to the next in line (if connected to overhead busbar or droppers) including PG clamps/Tee connectors etc. This will be clear from the enclosed electrical layout drawings.
1.19	Equipment and tower erection would include supply and erection of miscellanneous items , viz Phase colour discs , labels painting of equipments , phase colour painting , phase marking , bay identification board , danger plates , rubber mats , device number marking on the equipment, keyboard etc as per site requirements. Supply & Mounting of phase color discs & Danger plates shall be as per IS-2551; 1982 & IS 5; 1978.
1.20	Complete ETC package is under the scope of bidder. All T&P including hydras, cranes etc. required to complete the job shall be provided by bidder only.
1.21	Quantity of supply items are provisional and shall be as per actual work requirement at site.
1.22	MS Welding - The M.S. flat/angle/channel shall be finally painted with two coats of Red oxide primer and two coats of Zinc riched enamel paint.
1.23	In cable tray / ladder if minor fabrication is required the same shall be applied with one coat of red lead primer, one coat of oil primer followed by two finishing coats of aluminium paint. Supporting steel shall be painted before laying of cables. The painting shall be done with one coat of red lead paint and two coats of approved bituminous aluminium paint, if not mentioned otherwise.
1.24	Testing instruments (duly calibrated) have to be arranged by ETC Contractor at it's own cost on returnable basis (List is only provided for information, if any other instrument not mentioned below but required for successful completion of ETC work shall be in ETC contractor scope)
1.24.1	OMICRON or equivalent kit for Numerical relay testing
1.24.2	DCRM (Dynamic Contact Resistance Measurement kit) OPERATIONAL ANALYZER
1.24.3	CRM (Contact Resistance Measurement kit)
1.24.4	Relay test kit
1.24.5	Capacitance and Tan delta measurement Kit
1.24.6	Dew Point Measurement kit
1.24.7	5kV/1kV Megger
1.24.8	Primary current Injection Kit of suitable rating
1.24.9	Secondary current/Voltage Injection kit
1.24.10	1Ph Variac
1.24.11	Multimeters
1.24.12	Clamp on meter and Leakage Tester
1.24.13	Gas leak detector

Project:	**LTHPL Teesta-VI HEP Project**
Customer:	**LTHPL**
Doc No:	**ETC-BOQ/GIS/NOTE.1 Rev.0**
Title:	**SCOPE NOTE 1 - STANDARD SCOPE NOTE FOR E.T.C. WORKS**
Sr No.	PARTICULARS
1.25	General Tools and Tackles to be arranged by ETC Contractor on returnable basis. (based on general requirement for erection, testing and commissioning of GIS under scope): The following is the list of Items which may be extended further depending upon the site timely requirements
1.25.1	Tools for GIS erection (to be arranged by Bidder on returnable basis) as per ANNEXURE - A & B
1.25.2	14/16 ton Hydra with lifting tools (Shackle, slings etc), and 25MT Swing Crane for GIS Bay & accessories shifting on site
1.25.3	Slinges suitable for lifting of material upto 10T from Transformer floor upto GIS floor
1.25.4	Hand/Hydraulic Pallet Trolley (Qty- 2 nos. (min.)) for GIS modules & accessories boxes shifting
1.25.5	Power supply sockets with extension board inside GIS room Qty - 2 nos. min.
1.25.6	Vacuum cleaner machine for GIS room cleaning Qty - 2 nos. min.
1.25.7	Necessary numbers of fire extinguisher
1.25.8	Forklifts (2 Nos. min.) for lifting of GIS bays, with maximum lifting capacity of 10T.
1.25.9	Motorized Chain pulley and hook arrangement for lifting of GIS bay modules from Transformer floor to GIS floor
1.26	Proper test reports for the tests conducted at site shall be prepared by the contractor on the formats provided by BHEL/NHPC/LTHPL and the reports shall be presented for approval of BHEL and NHPC/LTHPL engineer in required no. of sets in hard copy.
1.27	It shall be the bidder respnsibility to arrange for the charging clearance/approval from the CEA or the concerned agency well before the scheduled date of charging of equipment.
1.28	Arrangement of temporary/ adequate illumination for site work/watch and ward/security and safety of material at site shall be in scope of ETC contractor.
1.29	Drilling/anchoring in RCC for fixing bolts with chemical grouts for GIS erection shall be in the bidders scope.
1.30	For handing over of Spare equipments in Pothead yard to Customer, Equipment testing is in ETC contractor scope.

Project : LTHPL Teesta-VI HEP Project
Customer : LTHPL
Doc No: ETC-BOQ/GIS/NOTE.2 Rev.0
Title: SCOPE NOTE 2 - PROJECT SPECIFIC SCOPE NOTE FOR E.T.C. WORKS

Sr	PERTICULARS
2.1	Cable fire sealing - Cable/cable tray openings in walls and floors or through pipe sleeves from one area to another or from one elevation to another within the unit shall be seated by a fire proof sealing system (FPSS). The FPSS shall effectively prevent the spread of fire from the flaming to non-flaming side of a fire. Wherever the cables/cable trays pass through walls/floors, fire proof cable penetration seals rated for one hour shall be provided. In order to prevent fire propagation through cable penetrations, after laying, dressing & clamping of cables, all the openings shall be properly sealed by using Fire Stop Mortar Seal and Fire Retardant Cable coating compound. Also the cable runs both before and after the fire scale shall be suitably sprayed with anti-fire propagation liquid.
2.2	All ETC works shall be done as per BHEL/LTHPL Specification. Miscellaneous works pertaining to 220kV GIS and Pothyard are deemed inclusive. (enclosed).
2.3	Equipment bolted connection after being checked and tested shall be painted with anticorrosive paint / compound be welded. For rust protection, the welds shall be treated with zinc chromate primer and coated with zinc rich paint.
2.4	Attached Drawings i.e. SLD, PLAN, Section, AUX SLD e.t.c. are tentative and subject for revision during detailed engineering / contract stage. Bidder to quote accordingly.

Returnable Installation Tools List			
Sr.No	**Discription**	**Pictorial Representation**	**Qty/Set**
1	Hydraulic pressure cylinder RC 104		3
2	Hydraulic short stroke cylinder RCS 201		1
3	Hydr. Handpump P 80		4
4	High-pressure hose 3/8 inch-18 NPT 900 mm high-pressure hydraulic		4
5	Hhydraulic couplings CH 604 3/8 NPT plug		5
6	Combination wrench 12-parts 10 - 32mm DIN 3113		1
7	Adapter combination ratchet 10 mm		2
8	Adapter combination ratchet 24 mm		2
9	Adapter combination ratchet 17 mm		2
10	Adapter combination ratchet 19 mm		3
11	Adapter combination ratchet 13 mm		3
12	Adapter 1/2 inch to 3/8 inch DIN 3123		2
13	Adapter 1/4 inch to 3/8 inch DIN 3123		2
14	adapter 1/4 inch to 1/2 inch DIN 3123		2
15	Torque wrench 5 - 50 Nm 9 x 12 holder		1
16	Torque wrench 20 -200 Nm 14 x 18 holder		1

estricted

Sr.No	Discription	Pictorial Representation	Qty/Set
17	plug-in ratchet 3/8" shank 9 x 12 size 5 735		2
18	Plug-in ratchet 1/2" shank 14 x 18 size 20 735		2
19	Square plug-in tool shank 9 x 12 size 5 734		1
20	Square plug-in tool shank 9 x 12 size 10 734		1
21	Open-end wrench plug-in tool shank 9 x 12 mm 17 mm 731/10		2
22	Open-end wrench plug-in tool shank 14 x18 mm 24 mm 731/40		2
23	Ring wrench plug-in tool shank 14 x18 mm 17 mm 732/40		2
24	Ring wrench plug-in tool shank 14 x18 mm 19 mm 732/40		2
25	Ring wrench plug-in tool shank 14 x18 mm 24 mm 732/40		2
26	Plug-in tool 10 mm SW Ring open 9 x 12		1
27	Plug-in tool 11 mm SW Ring open 9 x 12		1
28	Plug-in tool 12 mm SW Ring open 9 x 12		1
29	Plug-in tool 13 mm SW Ring open 9 x 12		1
30	Plug-in tool 17 mm SW Ring open 9 x 12		1

estricted

Sr.No	Discription	Pictorial Representation	Qty/Set
31	Plug-in tool 19 mm SW Ring open 9 x 12		1
32	Plastic hammer cellulose actat 40 mm head diameter with ash wooden handle		2
33	All purpose pull jacks 750 kg carrying capacity 1.5m stroke		2
34	All purpose pull jacks 1,500 kg carrying capacity 1.5m stroke		1
35	Eurobox transport box 800 x 600 x 610 mm		2
36	Industrial Vaccum cleaner (MORE THAN 3000W)		1
37	Light metal spirit level Length 1,000 mm with 3 vials		1
38	ALU spirit level with a magnet Length 200 mm		1
39	Single open-end wrench 50 mm DIN 894		1
40	Single open-end wrench 30 mm DIN 894		1
41	Single open-end wrench 32 mm DIN 894		2
42	Angled screwdriver 13-parts T 6- T 50 long version		1
43	Socket spanner 1/4 inch +1/2 inch 63-parts Hexagon and TORX		1
44	Socket spanner 1/4 inch 29-parts Hexagon		1
45	Screwdriver Inserts 9-piece 1/2 inch 5- 17mm For hex. screws ¼inch and /		1
46	Ratchet 1/2 inch DIN3122 380 mm with plastic handle		2
47	Heavy-duty combo-pliers 200 mm head polished with Plastic handle		4

Sr.No	Discription	Pictorial Representation	Qty/Set
48	Water pump pliers 250mm w.grooved joint head polished w.plastic handle		4
49	Mechanic's pliers angled jaws		4
50	Screwdriver Inserts 9-piece 1/2 inch 5- 17mm For hex. screws ¼inch and /		1
51	Round sling 2,000 kg load- 2 m circumference		4
52	Round sling 2,000 kg load - 5 m circumference, two ply		4
53	Round Slinge 3000 Kg ,8 m cirumference,(Effective Length 4 m)		4
54	Round sling 5,000 kg load - 3 m circumference, two ply		4
55	Round sling 5,000 kg load - 1 m circumference, two ply		4
56	Step ladder both sided Can be walked 2 x 6 steps 1.69 m		1
57	Pocket tape measure MBT EG II length 5m width 32 mm Spikes hooks, belt clip		2
58	Plastic folding rule 2 m EU class III		2
59	File brush 115 x 40 mm		3
60	Cable drum steel sheet with 50 m rubber cable 3x1.5 mm2		1
61	Files, 5 piece 200 mm cut 2 with beech handle in roll-up pouch	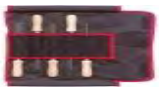	1
62	Plumb bob 300 g		2
63	Plumb line 50 m perlon white		2

Sr.No	Discription	Pictorial Representation	Qty/Set
64	Hook wrench with nose 80 - 90 mm DIN 1810 A		1
65	Hexagon screwdriver 9-parts slide cover 1.5-10 mm ball-end		1
66	Socket spanner insert 13 mm 1/2 inch long version Bi-hexagon		1
67	Socket spanner insert 17 mm 1/2 inch long version Bi-hexagon		1
68	Socket spanner insert 19 mm 1/2 inch long version Bi-hexagon		1
69	Socket spanner insert 24 mm 1/2 inch long version Bi-hexagon		1
70	INHEX-insert 1/2" 8 mm 1054/8		2
71	STAHLWILLE INHEX-insert 1/2" 10 mm 1054/10		2
72	Plug in adaptor 14x18 to 9x12		2
73	Plug in adaptor 9x12 to 14x18		2
74	Screwdriver insert 8 mm 1/2 inch Length 120 mm for Hexagon socket screws		1
75	Screwdriver insert 10 mm 1/2 inch Length 140 mm for Hexagon socket screws		1
76	Screwdriver insert 12 mm 1/2 inch Length 140 mm for Hexagon socket screws		1
77	VDE rounded flat-nose pliers 200 mm curved 2 component grip		2
78	VDE side-cutters 180 mm head chrome-plated with two-component handle		2

estricted

Sr.No	Discription	Pictorial Representation	Qty/Set
79	Crimp tool PZ 16 for wire end sleeves H 6 - H 16		1
80	Crimp tool PZ 3 for wire end sleeves H 0.5 - H 6		1
81	Slotted screwdriver 2.5 x 80 mm Plus-Series 100 VDE		1
82	Slotted screwdriver 3.0 x 100 mm Plus-Series 100 VDE		1
83	Slotted screwdriver 3.5 x 100 mm Plus-Series 100 VDE		1
84	Slotted screwdriver 4.0 x 100 mm Plus-Series 100 VDE		1
85	Slotted screwdriver 5.5 x 125 mm Plus-Series 100 VDE		1
86	Slotted screwdriver 6.5 x 150 mm Plus-Series 100 VDE		1
87	Slotted screwdriver 8.0 x 200 mm Plus-Series 100 VDE		1
88	Slotted screwdriver 10.0 x 200 mm Plus-Series 100 VDE		1
89	Slotted clamping screwdriver screwdriver 3.5 x 0.6 x 150 mm		1
90	Slot-head screwdriver 6-parts in carton		1
91	Crosspoint screwdriver screwdriver PH 0 VDE SoftFinish		1
92	Crosspoint screwdriver screwdriver PH 1 VDE SoftFinish		1
93	Crosspoint screwdriver screwdriver PH 2 DE SoftFinish		1
94	Crosspoint screwdriver screwdriver PH 3 VDE SoftFinish		1
95	Crosspoint screwdriver screwdriver PH 4 VDE SoftFinish		1

estricted

Sr.No	Discription	Pictorial Representation	Qty/Set
96	Nut spinner 6 mm VDE SoftFinish		1
97	Nut spinner 8 mm VDE SoftFinish		1
98	Voltage testing screwdriver screwdriver 3 x 60 mm VDE 220-250 V		2
99	Screwdriver PZ 0 Plus-Series 100 VDE		1
100	Screwdriver PZ 1 Plus-Series 100 VDE		1
101	Screwdriver PZ 3 VDE		1
102	Screwdriver PZ 4 VDE		2
103	Multi-purpose scissors 205 mm non-rusting		1
104	Crimp pliers Harting 09 99 000 0110		1
105	Crimping lever pliers 180 mm for cable end sleeves self-adjusting		1
106	Cross-head screwdriver screwdriver PH 1 x 80 mm VDE		1
107	Cross-head screwdriver screwdriver PH 2 x 100 mm VDE		1
108	guid pin M12		6
109	Lifting Nut D12 mm		4
110	Lifting Nut D16mm		4

Sr.No	Discription	Pictorial Representation	Qty/Set
111	Shackle 12mm		4
112	Shackle 16mm		4
113	CT insulating guide pin (5101192704)		8

Commissioning Tools (No)			
Sr. No	**Description**	**Pictorial Description**	**Qty**
	Multimeter (with Accessories)		1
	Contact Resistance Meter		1
	SF6-Analyzer multi-function instrument for dewpoint- and volume procent measurement		1
	CT/VT Analyser		1
	9 part - connector set		1

FIRST ANGLE PROJECTION (ALL DIMENSIONS ARE IN mm)

THE INFORMATION ON THIS DOCUMENT IS THE PROPERTY OF BHARAT HEAVY ELECTRICALS LIMITED. IT MUST NOT BE USED DIRECTLY OR INDIRECTLY IN ANY WAY DETRIMENTAL TO THE INTEREST OF THE COMPANY

COMPUTER FILE NAME

REF. DRG. NO.

SIGN. AND DATE

INVENTORY NO

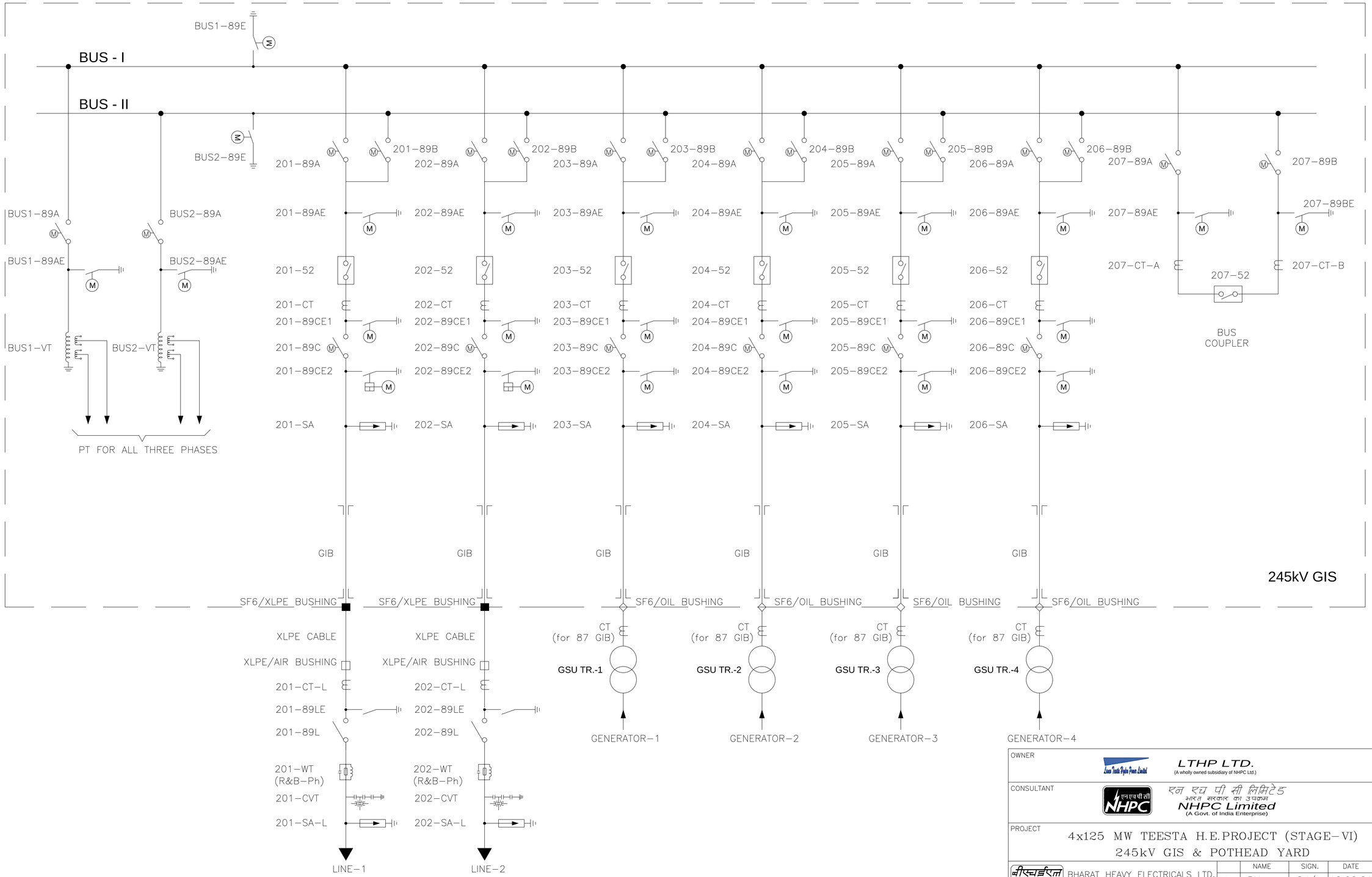

REV.	DATE	ALTERED	REV.	DATE	ALTERED	REV.	DATE	ALTERED	REV.	DATE	ALTERED	REV.	DATE	ALTERED	REV.	DATE	ALTERED
		CHD/APPD			CHD/APPD			CHD/APPD			CHD/APPD		27.12.16	CHD/APPD	01	30.06.21	CHD/APPD MVK SKS
ZONE			ZONE			ZONE			ZONE			ZONE					REVISED AS PER NHPC COMMENTS.

OWNER: LTHP LTD. (A wholly owned subsidiary of NHPC Ltd.)

CONSULTANT: NHPC Limited (A Govt. of India Enterprise)

PROJECT: 4x125 MW TEESTA H.E.PROJECT (STAGE-VI)
245kV GIS & POTHEAD YARD

BHARAT HEAVY ELECTRICALS LTD. TRANSMISSION BUSINESS GROUP NOIDA

	NAME	SIGN.	DATE	NO.OF VAR.
DRN.	PK	Sd/-	12.02.21	N.A.
CHD.	MVK	Sd/-	12.02.21	
APPD.	SKS	Sd/-	12.02.21	

DEPT.	UNTOL. DIMS. GR.	SCALE	WEIGHT (KG)	REF. TO ASSY. DRG.	ITEM NO.	NO.OF ITEMS
PE&SD CODE 450	g/M/f	N.T.S	N.A.	N.A.	N.A.	N.A.

TITLE: SINGLE LINE DIAGRAM OF 245kV GIS & 245kV POTHEAD YARD

CARD CODE: NA

DRG.NO. TSVI-PYD06TD001-B / TB-3-415-510-001

REV. 01

SHT. No 01 NO. OF SHT. 02

FIRST ANGLE PROJECTION (ALL DIMENSIONS ARE IN mm)

THE INFORMATION ON THIS DOCUMENT IS THE PROPERTY OF BHARAT HEAVY ELECTRICALS LIMITED. IT MUST NOT BE USED DIRECTLY OR INDIRECTLY IN ANY WAY DETRIMENTAL TO THE INTEREST OF THE COMPANY

COMPUTER FILE NAME | REF. DRG. NO. | SIGN. AND DATE | INVENTORY NO

LEGEND:- BOQ FOR 220kV GIS

S.N.	EQUIPMENT	SYMBOL	QTY.	EQUIPMENT DESIGNATION
1.	245kV, 2000A, 3x1–Ph, METAL ENCLOSED CIRCUIT BREAKER		07	201–52, 202–52, 203–52, 204–52, 205–52, 206–52, 207–52
2.	245kV, 2000A, 3–Ph , GROUP OPERATED MOTORISED DISCONNECTOR		22	201–89A, 201–89B, 201–89C, 202–89A, 202–89B, 202–89C, 203–89A, 203–89B, 203–89C, 204–89A, 204–89B 204–89C, 205–89A, 205–89B, 205–89C, 206–89A, 206–89B, 206–89C, 207–89A, 207–89B, BUS1–89A, BUS2–89A
3.	245kV, 3–Ph, GROUP OPERATED MAINTENANCE EARTHING SWITCH MOTORISED		22	201–89AE, 201–89CE1, 202–89AE, 202–89CE1, 203–89AE, 203–89CE1, 203–89CE2, 204–89AE, 204–89CE1, 204–89CE2, 205–89AE, 205–89CE1, 205–89CE2, 206–89AE, 206–89CE1, 206–89CE2, 207–89AE, 207–89BE, BUS1–89AE, BUS2–89AE, BUS1–89E, BUS2–89E
4.	245kV, 3–PH, GROUP OPERATED HIGH SPEED EARTHING SWITCH MOTORISED		02	201–89CE2, 202–89CE2
5.	245kV CURRENT TRANSFORMER (1–Ph)		24	201–CT, 202–CT, 203–CT, 204–CT, 205–CT, 206–CT, 207–CT–A, 207–CT–B,
6.	220kV VOLTAGE TRANSFORMER (3–Ph)		02	BUS1–VT, BUS2–VT
7.	216kV SURGE ARRESTER (1–Ph)		18	201–SA, 202–SA, 203–SA, 204–SA, 205–SA, 206–SA
8.	245kV SF6 to OIL BUSHING (1–Ph)	◇	12	----------
9.	245kV SF6 to XLPE BUSHING (1–Ph)	■	06	----------

LEGEND:- BOQ FOR POTHEADYARD

S.N.	EQUIPMENT	SYMBOL	QTY.	EQUIPMENT DESIGNATION
1.	245kV, 2000A, 40kA/1s, HDB ISOLATOR WITH 1 EARTH SWITCH (BOTH MOTORISED) (MECHANICALLY GANGED) (3–Ph)		02	201–89L, 202–89L 201–89LE, 202–89LE
2.	245kV, 2000A, 40kA/1s, CURRENT TRANSFORMER (1–Ph)		06	201–CT–L, 202–CT–L
3.	245kV, 4400pF, $\frac{245kV}{\sqrt{3}}/\frac{110V}{\sqrt{3}}/\frac{110V}{\sqrt{3}}/\frac{110V}{\sqrt{3}}$ CVT (1–Ph)		06	201–CVT, 202–CVT
4.	216kV SURGE ARRESTER (1–Ph)		06	201–SA–L, 202–SA–L
5.	245kV, 1mH, 2000A, 40kA/1s WAVE TRAP (GANTRY MOUNTED) (1–Ph)		04	201–WT, 202–WT
6.	245kV XLPE CABLE SEALING END (1–Ph)	□	06	----------

MAIN SYSTEM PARAMETERS;–	
RATED VOLTAGE	220 kV
HIGHEST SYSTEM VOLTAGE	245 kV
NO. OF PHASES	3
LIGHTENING IMPULSE PHASE TO EARTH/ ACROSS OPEN SWITCHING DISTANCE AND BETWEEN PHASES	1050 kV_P / 1200 kV_P
POWER FREQUENCY PHASE TO EARTH/ ACROSS OPEN SWITCHING DISTANCE AND BETWEEN PHASES	460 kVrms / 530 kVrms
CREEPAGE DISTANCE	25mm/kV
SHORT CIRCUIT RATING (GIS)	40 kA for 1s
SHORT CIRCUIT RATING (POTHEAD YARD)	40 kA for 1s
RATED PEAK WITHSTAND CURRENT	100 kA
FREQUENCY	50 Hz
SYSTEM EARTHING	SOLIDLY EARTHED

NOTES:-

1. THE CT/CVT DETAILED PARAMETERS SHALL BE MENTIONED SEPARATELY IN KEY PROTECTION DIAGRAM.
2. WAVE TRAP IN LINE BAYS WOULD BE IN TWO PHASES ONLY. HOWEVER, FOUNDATION FOR BPI WILL BE IN ALL PHASES.

REV.	DATE	ALTERED	REV.	DATE	ALTERED	REV.	DATE	ALTERED	REV.	DATE	ALTERED	REV.	DATE	ALTERED	REV.	DATE	ALTERED
		CHD/APPD			CHD/APPD			CHD/APPD			CHD/APPD		27.12.16	CHD/APPD	01	30.06.21	CHD/APPD MVK SKS
ZONE			ZONE			ZONE			ZONE			ZONE					REVISED AS PER NHPC COMMENTS.

OWNER: LTHP LTD. (A wholly owned subsidiary of NHPC Ltd.)

CONSULTANT: एनएचपीसी NHPC — एन एच पी सी लिमिटेड, भारत सरकार का उपक्रम, NHPC Limited (A Govt. of India Enterprise)

PROJECT: 4x125 MW TEESTA H.E.PROJECT (STAGE–VI)
245kV GIS & POTHEAD YARD

BHEL — BHARAT HEAVY ELECTRICALS LTD. TRANSMISSION BUSINESS GROUP NOIDA

	NAME	SIGN.	DATE	NO.OF VAR.
DRN.	PK	Sd/–	12.02.21	N.A.
CHD.	MVK	Sd/–	12.02.21	
APPD.	SKS	Sd/–	12.02.21	

DEPT.	UNTOL. DIMS.	SCALE	WEIGHT (KG)	REF. TO ASSY. DRG.	ITEM NO.	NO.OF ITEMS
PE&SD CODE 450	GR. g/M/f	N.T.S	N.A.	N.A.	N.A.	N.A.

TITLE: SINGLE LINE DIAGRAM OF 245kV GIS & 245kV POTHEAD YARD

CARD CODE: NA

DRG.NO. TSVI–PYD06TD001–B / TB–3–415–510–001

REV. 01

SHT. No 02 NO. OF SHT. –

This drawing and design is the property of GE and must not be copied or lent without prior permission in writing

DRAWING NO. : GD06A000664

SYSTEM PARAMETER		
RATED CURRENT BUSBAR	Ir	2000A
RATED CURRENT BUSCOUPLER	Ir	2000A
RATED CURRENT LINE BAYS & GEN BAYS	Ir	2000A
RATED FREQUENCY	Fr	50Hz
SHORT-TIME WITHSTAND CURRENT	Ik	40kA
DURATION	tk	1s
RATED VOLTAGE	Ur	220kV rms
POWER FREQUENCY WITHSTAND VOLTAGE	Ud	460kV rms
LIGHTING IMPULSE WITHSTAND VOLTAGE	Up	1050kVp
PEAK WITHSTAND CURRENT	Ip	100kA
INTERNAL ARC WITHSTAND TIME		300ms
MAXIMUM GAS LOSS PER YEAR		<0.5%
CONTROL VOLTAGE	Vdc	220V DC
LIGHTING AND SPACE HEATING	Vac	240V AC

APPLICABLE STANDARDS	
HIGH VOLTAGE ALTERNATING CURRENT CIRCUIT BREAKER	IEC 62271-100
HIGH VOLTAGE ALTERNATING CURRENT DISCONNECTOR & EARTHING SWITCH	IEC 62271-102
GAS INSULATED METAL ENCLOSED SWITCHGEAR	IEC 62271-203
HV BUSHING	IEC 60137
CURRENT TRANSFORMER	IEC 61869-2
VOLTAGE TRANSFORMER	IEC 61869-3
SF6 GAS	IEC 60376
PRESSURE VOLTAGE	CENELEC

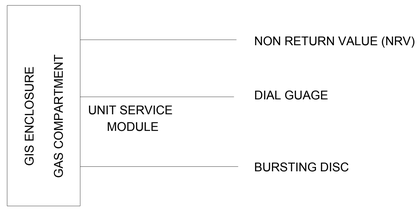

SUMMARY

PAGE	DESCRIPTION
1	SUMMARY
2	GIS FLOOR OVERALL PLAN VIEW & TRANSFORMER FLOOR PLAN VIEW
3	OVERALL PLAN SECTION VIEW
4	BAY-07_GEN-TRAFO-04 PLAN & SECTION VIEW
5	BAY-06_GEN-TRAFO-03 PLAN & SECTION VIEW
6	BAY-04_GEN-TRAFO-02 PLAN & SECTION VIEW
7	BAY-03_GEN-TRAFO-01 PLAN & SECTION VIEW
8	BAY-02_LINE-02 PLAN & SECTION VIEW
9	BAY-01_LINE-01 PLAN & SECTION VIEW
10	BAY-05_BUS-COUPLER PLAN & SECTION VIEW
11	BAY-05A_BUS-VT PLAN & SECTION VIEW
12	GIS FLOOR CUTOUT DETAILS & GIS FLOOR CRANE MOVEMENT
13	3D-MODEL VIEW

Notes:

1. All Gas compartment are equipped with Density switch,Bursting Disc, Filling value, Static Filter (Moisture Absorber)

SF6 DENSITY MONITORING DETAILS	
CIRCUIT BREAKER	OTHER COMPARTMENTS
Normal : 6.3 Bars Gas Re-fill level (alarm): 5.8 Bars (stage - I) Block / Lockout Level : 5.5 BARS(stage - II)	Normal : 6.3 Bars Gas Re-fill level (alarm): 5.8 Bars (stage - I) Block / Lockout Level : 5.5 BARS(stage - II)

GIS COLOR:
INDOOR :RAL 7032
OUTDOOR :RAL 7032

OWNER:- LTHP LTD. (Awholly owned subsidiary of NHPC Ltd.)

CONSULTANT:- NHPC Limited (A Govt. of India Enterprise)

PROJECT:- 4x125 MW TEESTA H.E.PROJECT (STAGE-VI)

VENDOR:- GE T&D INDIA LTD

LOI REF:- BHEL-TBG/MM / 61Q2200160 / LTHPL TEESTA (NHPC) / GE

All Dimensions are in MM Unless otherwise specified

BHARAT HEAVY ELECTRICALS LTD.
TRANSMISSION BUSINESS GROUP, NOIDA

	NAME	SIGN	DATE	NO. OF VAR
DRAWN	DHARANIDHARAN N	DN	04.08.2022	
CHECKED	SATHISH KUMAR N	NSK	04.08.2022	
APPROVED	SENTHILKUMAR R	RS	04.08.2022	

DEPT TBEM	UNTOL.DIMS. GR.	SCALE. NTS	WEIGHT (K.G.)	REF. TO.ASSY.DRG.	ITEM NO.	NO OF ITEM
CODE 422						

TITLE:- 220kV EQUIPMENT LAYOUT

GE DRW NO	GD06A000664	REV.
BHEL DRW NO.	TB-DG-415-316-402(3)	R4
NHPC DRW NO.	TSVI-GIS06TD003-A	
SHEET NO. 1	NO.OF SHEET. 13	

SIZE A0

REFERENCE DRAWING NO:-
1.GD06A000663 - GAS SINGLE LINE DIAGRAM

REV.	DATE	DRAWN.	CHECKED.	APPROVED.
R4	25.11.2022	VIJAYAKUMAR.S	SATHISH KUMAR N	SENTHILKUMAR R
R3	20.10.2022	DHARANIDHARAN N	SATHISH KUMAR N	SENTHILKUMAR R
R2	07.09.2022	DHARANIDHARAN N	SATHISH KUMAR N	SENTHILKUMAR R
R1	25.08.2022	DHARANIDHARAN N	SATHISH KUMAR N	SENTHILKUMAR R
R0	04.08.2022	DHARANIDHARAN N	SATHISH KUMAR N	SENTHILKUMAR R

"Nothing contained in this drawing shall be construed as basis for establishing contractual scope of works unless agreed otherwise in writing."

DRAWING NO. : GD06A000664

GIS FLOOR PLAN

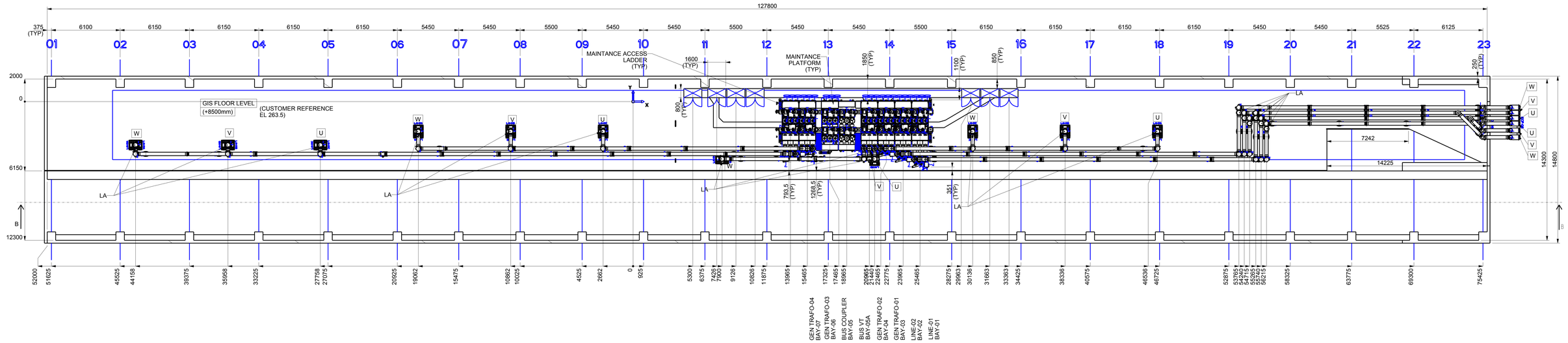

TRANFORMER PLAN VIEW

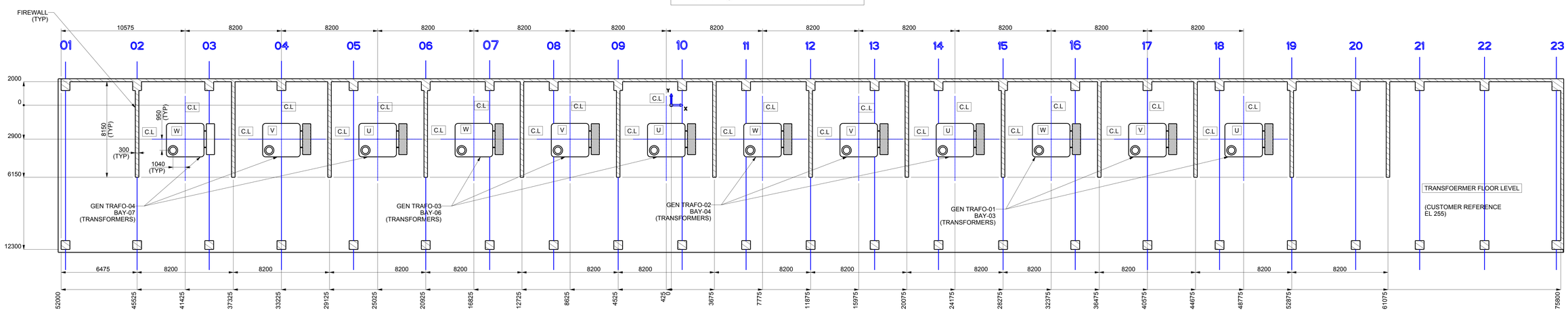

BAY NO	DESCRIPTION	WITH TRAFO CONNECT (TRAFO L=2945)			
		PHASE			TOTAL
		phase-W	phase-V	phase-U	
BAY-201	LINE-01	63688	62289	60889	186866
BAY-202	LINE-02	64499	63339	62599	190437
BAY-203	TRANSFORMER -01	19554	26329	33104	78987
BAY-204	TRANSFORMER -02	22788	14113	10301	47202
BAY-206	TRANSFORMER -03	43560	36785	30010	110355
BAY-207	TRANSFORMER -04	66431	59656	52881	178968
OVERALL DUCT LENGTH		280520	262511	249784	792815
OVERALL DUCT LENGTH (METER)		280.520	262.511	249.784	792.815

OWNER:- LTHP LTD. (Awholly owned subsidiary of NHPC Ltd.) — Lower Teesta Hydro Power Limited (A wholly owned Subsidiary of NHPC LTD.)

CONSULTANT:- NHPC Limited (A Govt. of India Enterprise)

PROJECT:- 4x125 MW TEESTA H.E.PROJECT (STAGE-VI)

VENDOR:- GE T&D INDIA LTD

LOI REF:- BHEL-TBG/MM / 61Q2200160 / LTHPL TEESTA (NHPC) / GE

All Dimensions are in MM Unless otherwise specified

BHARAT HEAVY ELECTRICALS LTD. TRANSMISSION BUSINESS GROUP, NOIDA

	NAME	SIGN	DATE	NO. OF VAR
DRAWN	DHARANIDHARAN N	DN	04.08.2022	
CHECKED	SATHISH KUMAR N	NSK	04.08.2022	
APPROVED	SENTHILKUMAR R	RS	04.08.2022	

DEPT TBEM | CODE 422 | UNTOL.DIMS. GR. | SCALE. NTS | WEIGHT (K.G.) | REF. TO.ASSY.DRG. | ITEM NO. | NO OF ITEM

TITLE:- 220kV EQUIPMENT LAYOUT

GE DRW NO GD06A000664 | BHEL DRW NO. TB-DG-415-316-402(3) | NHPC DRW NO. TSVI-GIS06TD003-A | REV. R4 | SHEET NO. 2 | NO.OF SHEET. 13 | SIZE. A0

REFERENCE DRAWING NO:-

REV.	DATE	DRAWN.
		CHECKED.
		APPROVED.

REV.	DATE	DRAWN.	CHECKED.	APPROVED.
R4	25.11.2022	VIJAYAKUMAR.S	SATHISH KUMAR N	SENTHILKUMAR R
R3	20.10.2022	DHARANIDHARAN N	SATHISH KUMAR N	SENTHILKUMAR R
R2	07.09.2022	DHARANIDHARAN N	SATHISH KUMAR N	SENTHILKUMAR R
R1	25.08.2022	DHARANIDHARAN N	SATHISH KUMAR N	SENTHILKUMAR R
R0	04.08.2022	DHARANIDHARAN N	SATHISH KUMAR N	SENTHILKUMAR R

This drawing and design is the property of GE and must not be copied or lent without prior permission in writing

"Nothing contained in this drawing shall be construed as basis for establishing contractual scope of works unless agreed otherwise in writing."

DRAWING NO. : GD06A000664

OVERALL PLAN SECTION VIEW

SECTION B-B

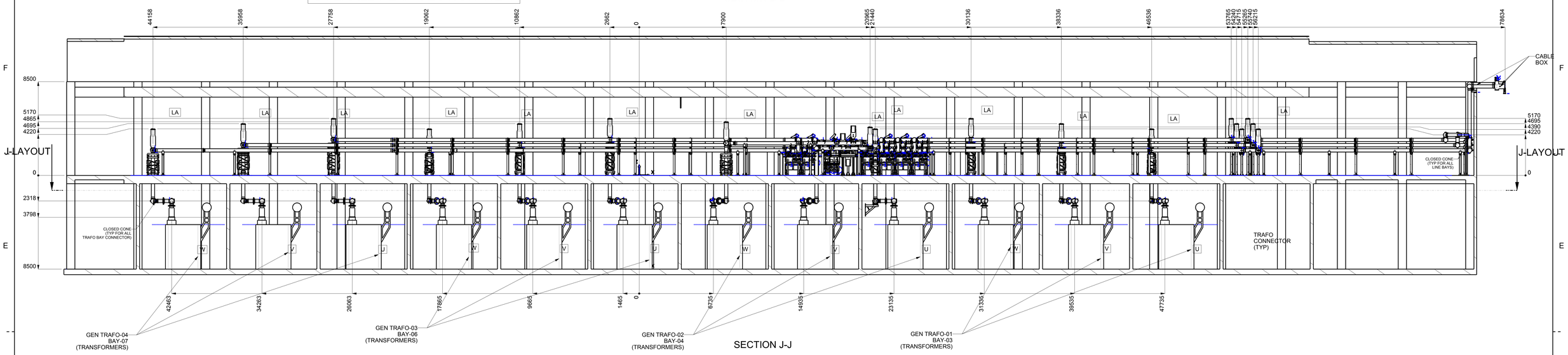

SECTION J-J

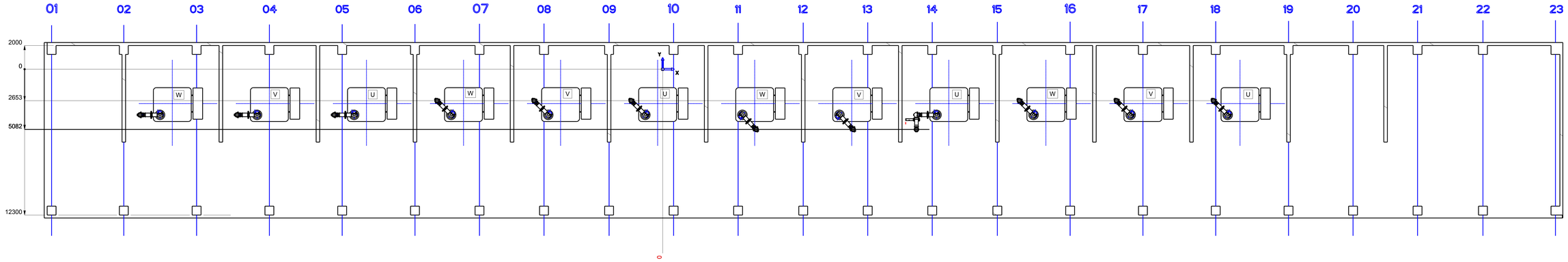

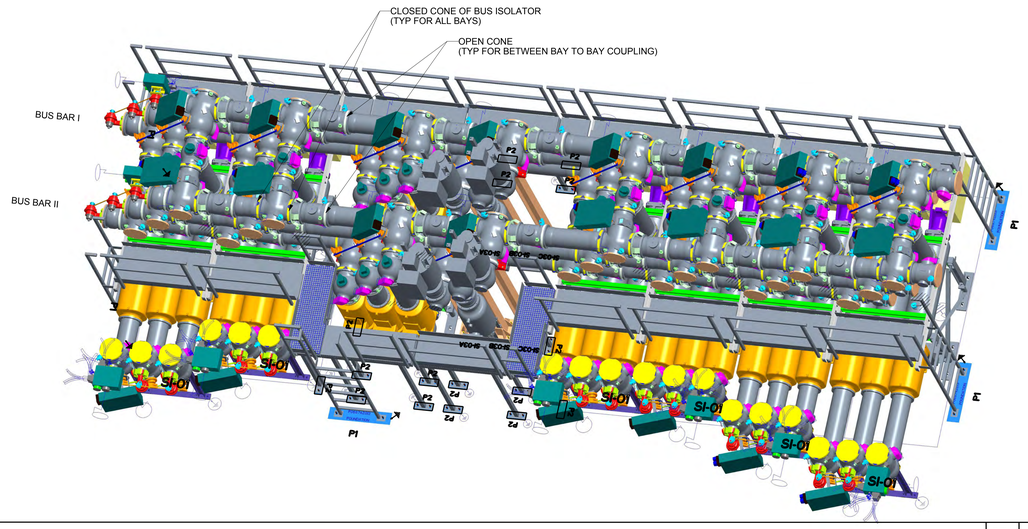

BUS BAR (GAS MASS Kgs)			
COMPARTMENT	PHASES		
	W PHASE	V PHASE	U PHASE
G17	3	3	3
G27	3	3	3
G16	4	4	4
G26	4	4	4
G15	3	3	3
G25	3	3	3
G14	4	4	4
G24	4	4	4
G13	3	3	3
G23	3	3	3
G12	3	3	3
G22	3	3	3
G11	3	3	3
G21	3	3	3
G18	1	1	1
G28	1	1	1

NOTE:-
*CLOSED CONE IS HIGHLIGHT YELLOW COLOR
*OPEN CONE IS HIGHLIGHT WHITE COLOR

OWNER:- LTHP LTD. (Awholly owned subsidiary of NHPC Ltd.) — Teesta Urja Ltd. (A wholly owned Subsidiary of NHPC LTD.)

CONSULTANT:- NHPC Limited (A Govt. of India Enterprise)

PROJECT:- 4x125 MW TEESTA H.E.PROJECT (STAGE-VI)

VENDOR:- GE T&D INDIA LTD

LOI REF:- BHEL-TBG/MM / 61Q2200160 / LTHPL TEESTA (NHPC) / GE

All Dimensions are in MM Unless otherwise specified

BHARAT HEAVY ELECTRICALS LTD. TRANSMISSION BUSINESS GROUP, NOIDA

	NAME	SIGN	DATE
DRAWN	DHARANIDHARAN N	DN	04.08.2022
CHECKED	SATHISH KUMAR N	NSK	04.08.2022
APPROVED	SENTHILKUMAR R	RS	04.08.2022

NO. OF VAR

DEPT	TBEM	UNTOL.DIMS. GR.	SCALE. NTS	WEIGHT (K.G.)	REF. TO.ASSY.DRG.	ITEM NO.	NO OF ITEM
CODE	422						

TITLE:- 220kV EQUIPMENT LAYOUT

GE DRW NO	GD06A000664	REV.
BHEL DRW NO.	TB-DG-415-316-402(3)	R4
NHPC DRW NO.	TSVI-GIS06TD003-A	
SHEET NO. 3	NO.OF SHEET. 13	

SIZE: A0

REFERENCE DRAWING NO:-

REV.	DATE	DRAWN.	REV.	DATE	DRAWN. VIJAYAKUMAR.S	REV.	DATE	DRAWN. DHARANIDHARAN N	REV.	DATE	DRAWN. DHARANIDHARAN N	REV.	DATE	DRAWN. DHARANIDHARAN N	REV.	DATE	DRAWN. DHARANIDHARAN N
		CHECKED.	R4	25.11.2022	CHECKED. SATHISH KUMAR N	R3	20.10.2022	CHECKED. SATHISH KUMAR N	R2	07.09.2022	CHECKED. SATHISH KUMAR N	R1	25.08.2022	CHECKED. SATHISH KUMAR N	R0	04.08.2022	CHECKED. SATHISH KUMAR N
		APPROVED.			APPROVED. SENTHILKUMAR R			APPROVED. SENTHILKUMAR R			APPROVED. SENTHILKUMAR R			APPROVED. SENTHILKUMAR R			APPROVED. SENTHILKUMAR R

This drawing and design is the property of GE and must not be copied or lent without prior permission in writing

"Nothing contained in this drawing shall be construed as basis for establishing contractual scope of works unless agreed otherwise in writing."

DRAWING NO. : GD06A000664

BAY-07_GEN-TRAFO-04
PLAN & SECTION VIEW

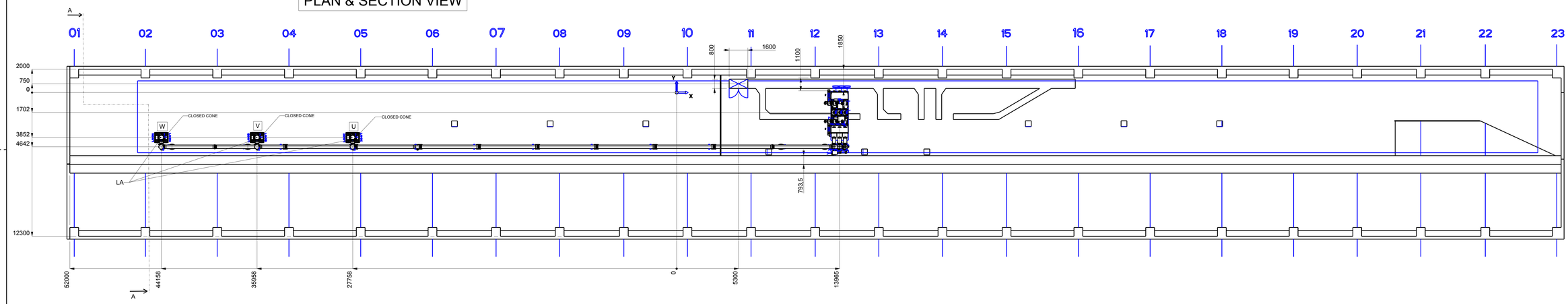

SECTION A-A

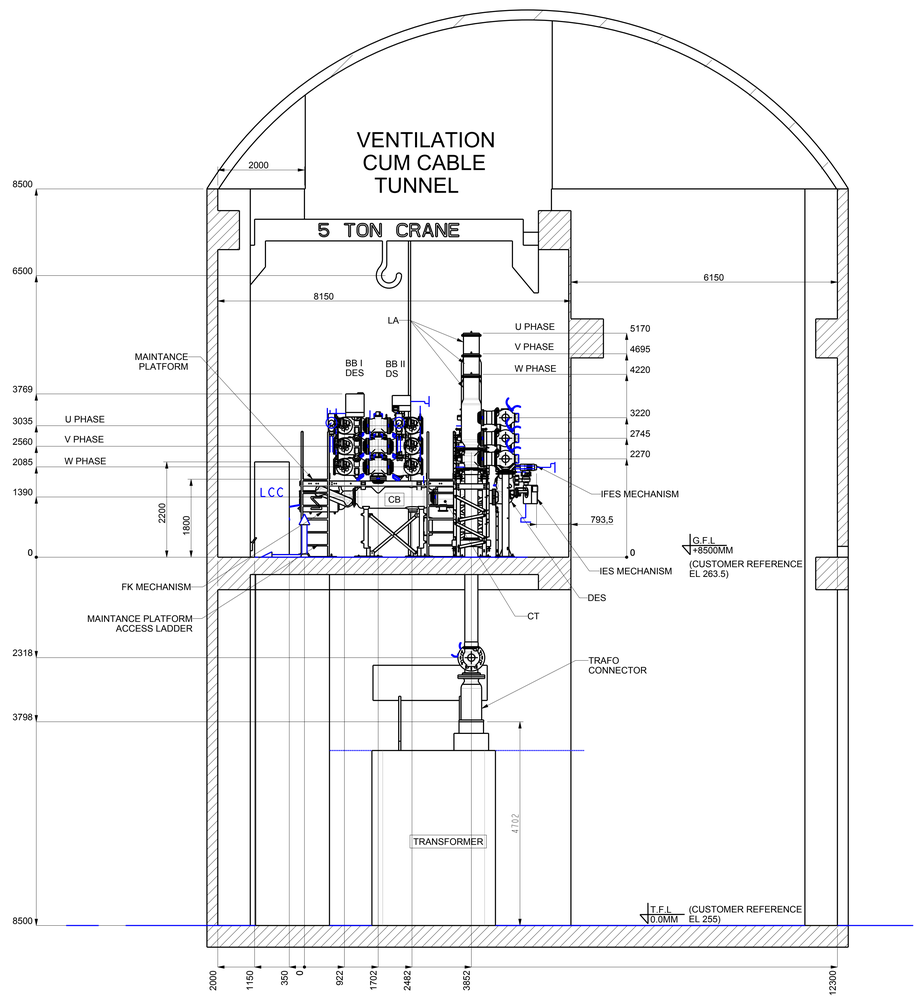

CONE INDICATION VIEW

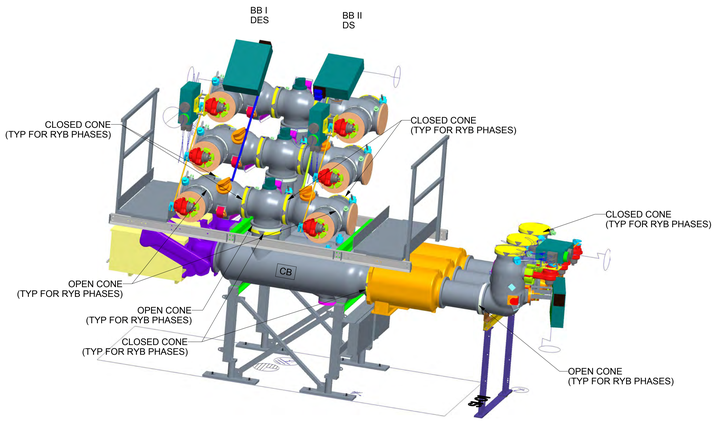

NOTE:-
*CLOSED CONE IS HIGHLIGHT YELLOW COLOR
*OPEN CONE IS HIGHLIGHT WHITE COLOR

BAY-07_GEN TRAFO-07 (GAS MASS Kgs)			
COMPARTMENT	PHASES		
	W PHASE	V PHASE	U PHASE
G0	12	12	12
G1	4	4	4
G2	4	4	4
G9	2	3	4
G4	7	7	7
G6	164	144	123
G7	27	28	29
G8	7	7	7

OWNER:-
LTHP LTD.
(Awholly owned subsidiary of NHPC Ltd.)

CONSULTANT:-
NHPC Limited
(A Govt. of India Enterprise)

PROJECT:-
4x125 MW TEESTA H.E.PROJECT (STAGE-VI)

VENDOR:-
GE T&D INDIA LTD

LOI REF:-
BHEL-TBG/MM / 61Q2200160 / LTHPL TEESTA (NHPC) / GE

All Dimensions are in MM Unless otherwise specified

BHARAT HEAVY ELECTRICALS LTD.
TRANSMISSION BUSINESS GROUP, NOIDA

	NAME	SIGN	DATE	
DRAWN	DHARANIDHARAN N	DN	04.08.2022	NO. OF VAR
CHECKED	SATHISH KUMAR N	NSK	04.08.2022	
APPROVED	SENTHILKUMAR R	RS	04.08.2022	

DEPT TBEM	UNTOL.DIMS. GR.	SCALE. NTS	WEIGHT (K.G.)	REF. TO.ASSY.DRG.	ITEM NO.	NO OF ITEM
CODE 422						

TITLE:-
220kV EQUIPMENT LAYOUT

GE DRW NO	GD06A000664	REV.
BHEL DRW NO.	TB-DG-415-316-402(3)	R4
NHPC DRW NO.	TSVI-GIS06TD003-A	
SHEET NO. 4	NO.OF SHEET. 13	

SIZE A0

REFERENCE DRAWING NO:-

REV.	DATE	DRAWN.	REV.	DATE	DRAWN. VIJAYAKUMAR.S	REV.	DATE	DRAWN. DHARANIDHARAN N	REV.	DATE	DRAWN. DHARANIDHARAN N	REV.	DATE	DRAWN. DHARANIDHARAN N	REV.	DATE	DRAWN. DHARANIDHARAN N	REV.	DATE	DRAWN.
		CHECKED.	R4	25.11.2022	CHECKED. SATHISH KUMAR N	R3	20.10.2022	CHECKED. SATHISH KUMAR N	R2	07.09.2022	CHECKED. SATHISH KUMAR N	R1	25.08.2022	CHECKED. SATHISH KUMAR N	R0	04.08.2022	CHECKED. SATHISH KUMAR N			CHECKED.
		APPROVED.			APPROVED. SENTHILKUMAR R			APPROVED. SENTHILKUMAR R			APPROVED. SENTHILKUMAR R			APPROVED. SENTHILKUMAR R			APPROVED. SENTHILKUMAR R			APPROVED.

This drawing and design is the property of GE and must not be copied or lent without prior permission in writing

"Nothing contained in this drawing shall be construed as basis for establishing contractual scope of works unless agreed otherwise in writing."

DRAWING NO. : GD06A000664

BAY-06_GEN-TRAFO-03
PLAN & SECTION VIEW

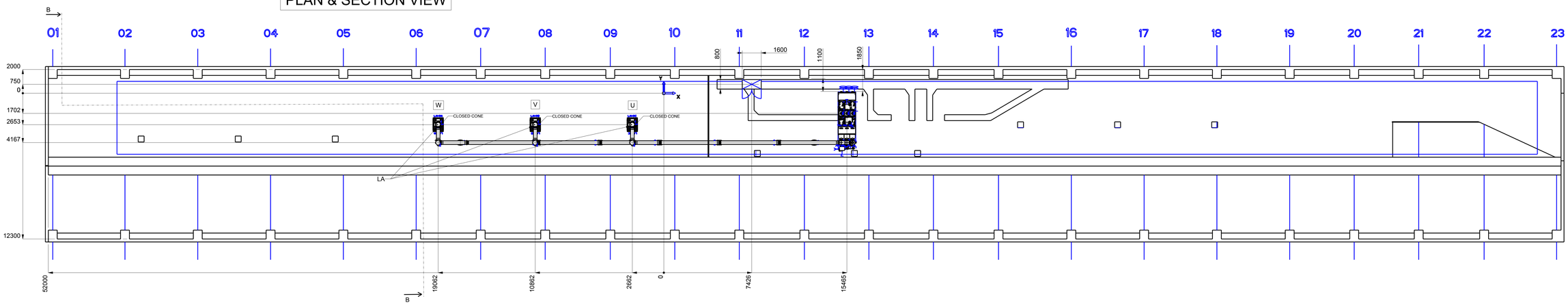

SECTION B-B

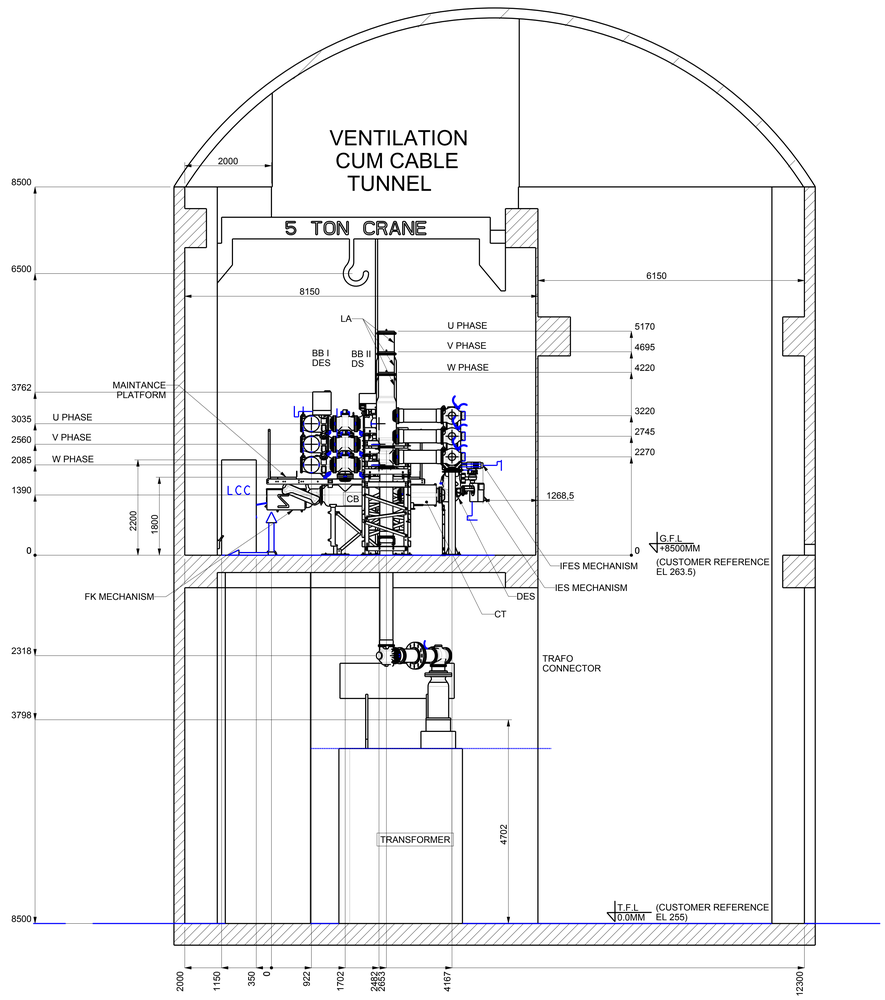

CONE INDICATION VIEW

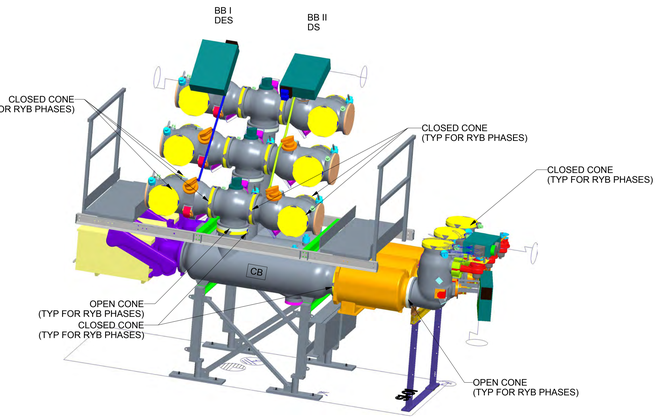

NOTE:-
*CLOSED CONE IS HIGHLIGHT YELLOW COLOR
*OPEN CONE IS HIGHLIGHT WHITE COLOR

BAY-06_GEN TRAFO-03 (GAS MASS Kgs)			
COMPARTMENT	PHASES		
	W PHASE	V PHASE	U PHASE
G0	12	12	12
G1	4	4	4
G2	4	4	4
G9	2	3	4
G4	6	6	6
G6	100	80	59
G7	27	28	29
G8	7	7	7

OWNER:-
LTHP LTD.
(Awholly owned subsidiary of NHPC Ltd.)

CONSULTANT:-
NHPC Limited
(A Govt. of India Enterprise)

PROJECT:-
4x125 MW TEESTA H.E.PROJECT (STAGE-VI)

VENDOR:-
GE T&D INDIA LTD

LOI REF:-
BHEL-TBG/MM / 61Q2200160 / LTHPL TEESTA (NHPC) / GE

All Dimensions are in MM Unless otherwise specified

BHARAT HEAVY ELECTRICALS LTD.
TRANSMISSION BUSINESS GROUP, NOIDA

	NAME	SIGN	DATE	
DRAWN	DHARANIDHARAN N	DN	04.08.2022	NO. OF VAR
CHECKED	SATHISH KUMAR N	NSK	04.08.2022	
APPROVED	SENTHILKUMAR R	RS	04.08.2022	

DEPT TBEM	UNTOL.DIMS. GR.	SCALE. NTS	WEIGHT (K.G.)	REF. TO.ASSY.DRG.	ITEM NO.	NO OF ITEM
CODE 422						

TITLE:-
220kV EQUIPMENT LAYOUT

GE DRW NO	GD06A000664
BHEL DRW NO.	TB-DG-415-316-402(3)
NHPC DRW NO.	TSVI-GIS06TD003-A
SHEET NO.	5
NO.OF SHEET.	13
REV.	R4
SIZE.	A0

REFERENCE DRAWING NO:-

REV.	DATE	DRAWN.	REV.	DATE	DRAWN. VIJAYAKUMAR.S	REV.	DATE	DRAWN. DHARANIDHARAN N	REV.	DATE	DRAWN. DHARANIDHARAN N	REV.	DATE	DRAWN. DHARANIDHARAN N	REV.	DATE	DRAWN. DHARANIDHARAN N
		CHECKED.	R4	25.11.2022	CHECKED. SATHISH KUMAR N	R3	20.10.2022	CHECKED. SATHISH KUMAR N	R2	07.09.2022	CHECKED. SATHISH KUMAR N	R1	25.08.2022	CHECKED. SATHISH KUMAR N	R0	04.08.2022	CHECKED. SATHISH KUMAR N
		APPROVED.			APPROVED. SENTHILKUMAR R			APPROVED. SENTHILKUMAR R			APPROVED. SENTHILKUMAR R			APPROVED. SENTHILKUMAR R			APPROVED. SENTHILKUMAR R

This drawing and design is the property of GE and must not be copied or lent without prior permission in writing

"Nothing contained in this drawing shall be construed as basis for establishing contractual scope of works unless agreed otherwise in writing."

DRAWING NO. : GD06A000664

BAY-04_GEN-TRAFO-02
PLAN & SECTION VIEW

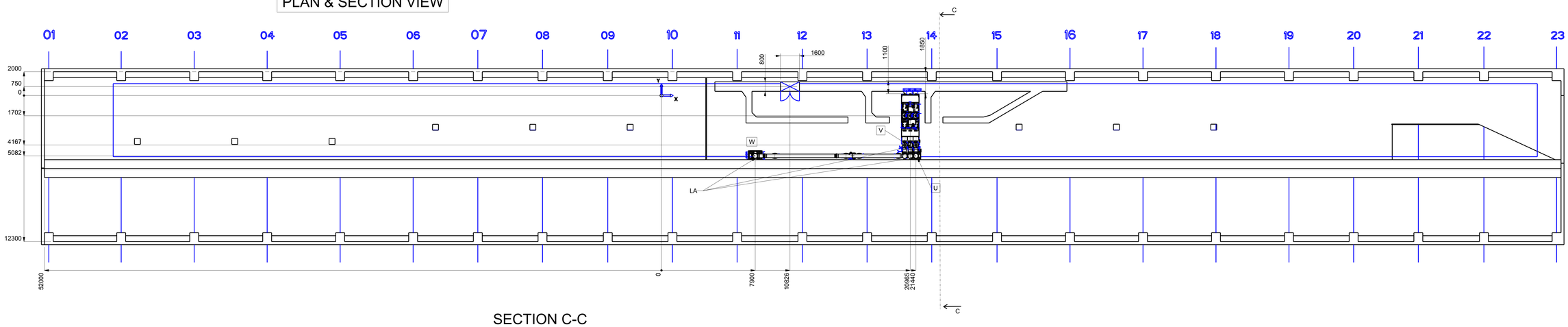

SECTION C-C

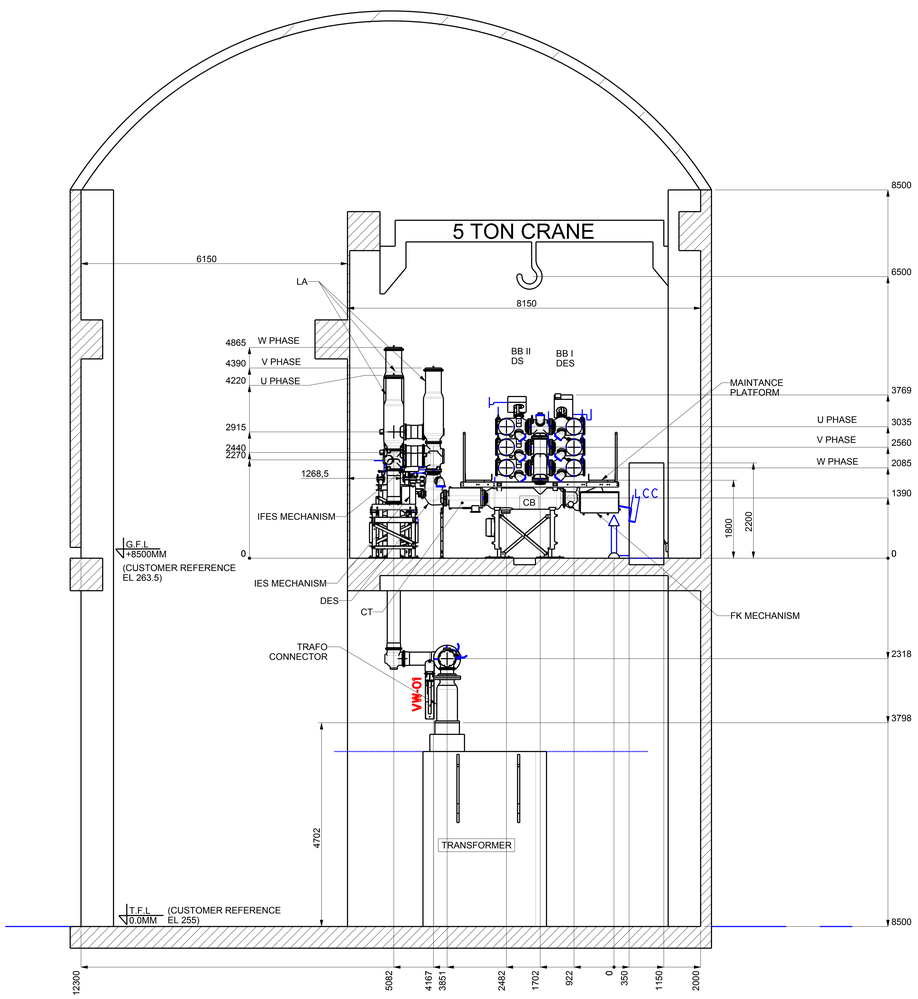

CONE INDICATION VIEW

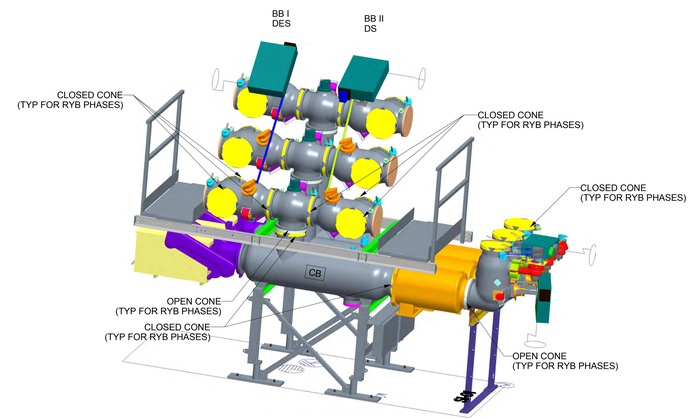

NOTE:-
*CLOSED CONE IS HIGHLIGHT YELLOW COLOR
*OPEN CONE IS HIGHLIGHT WHITE COLOR

BAY-04_GEN TRAFO-02 (GAS MASS Kgs)			
COMPARTMENT	PHASES		
	W PHASE	V PHASE	U PHASE
G0	12	12	12
G1	4	4	4
G2	4	4	4
G9	2	3	4
G4	6	6	6
G7	69	44	33
G8	7	7	7

OWNER:-
LTHP LTD.
(Awholly owned subsidiary of NHPC Ltd.)
Lower Teesta Hydro Power Limited
(A wholly owned Subsidiary of NHPC LTD.)

CONSULTANT:-
NHPC Limited
(A Govt. of India Enterprise)

PROJECT:-
4x125 MW TEESTA H.E.PROJECT (STAGE-VI)

VENDOR:-
GE T&D INDIA LTD

LOI REF:-
BHEL-TBG/MM / 61Q2200160 / LTHPL TEESTA (NHPC) / GE

All Dimensions are in MM Unless otherwise specified

BHARAT HEAVY ELECTRICALS LTD.
TRANSMISSION BUSINESS GROUP, NOIDA

	NAME	SIGN	DATE	NO. OF VAR
DRAWN	DHARANIDHARAN N	DN	04.08.2022	
CHECKED	SATHISH KUMAR N	NSK	04.08.2022	
APPROVED	SENTHILKUMAR R	RS	04.08.2022	

DEPT TBEM	UNTOL.DIMS. GR.	SCALE: NTS	WEIGHT (K.G.)	REF. TO.ASSY.DRG.	ITEM NO.	NO OF ITEM
CODE 422						

TITLE:-
220kV EQUIPMENT LAYOUT

GE DRW NO	GD06A000664	REV.
BHEL DRW NO.	TB-DG-415-316-402(3)	R4
NHPC DRW NO.	TSVI-GIS06TD003-A	
SHEET NO. 6	NO.OF SHEET. 13	SIZE. A0

REFERENCE DRAWING NO:-

REV.	DATE	DRAWN.	REV.	DATE	DRAWN. VIJAYAKUMAR.S	REV.	DATE	DRAWN. DHARANIDHARAN N	REV.	DATE	DRAWN. DHARANIDHARAN N	REV.	DATE	DRAWN. DHARANIDHARAN N	REV.	DATE	DRAWN. DHARANIDHARAN N	REV.	DATE	DRAWN.
		CHECKED.	R4	25.11.2022	CHECKED. SATHISH KUMAR N	R3	20.10.2022	CHECKED. SATHISH KUMAR N	R2	07.09.2022	CHECKED. SATHISH KUMAR N	R1	25.08.2022	CHECKED. SATHISH KUMAR N	R0	04.08.2022	CHECKED. SATHISH KUMAR N			CHECKED.
		APPROVED.			APPROVED. SENTHILKUMAR R			APPROVED. SENTHILKUMAR R			APPROVED. SENTHILKUMAR R			APPROVED. SENTHILKUMAR R			APPROVED. SENTHILKUMAR R			APPROVED.

This drawing and design is the property of GE and must not be copied or lent without prior permission in writing

"Nothing contained in this drawing shall be construed as basis for establishing contractual scope of works unless agreed otherwise in writing."

DRAWING NO. : GD06A000664

BAY-03_GEN-TRAFO-01
PLAN & SECTION VIEW

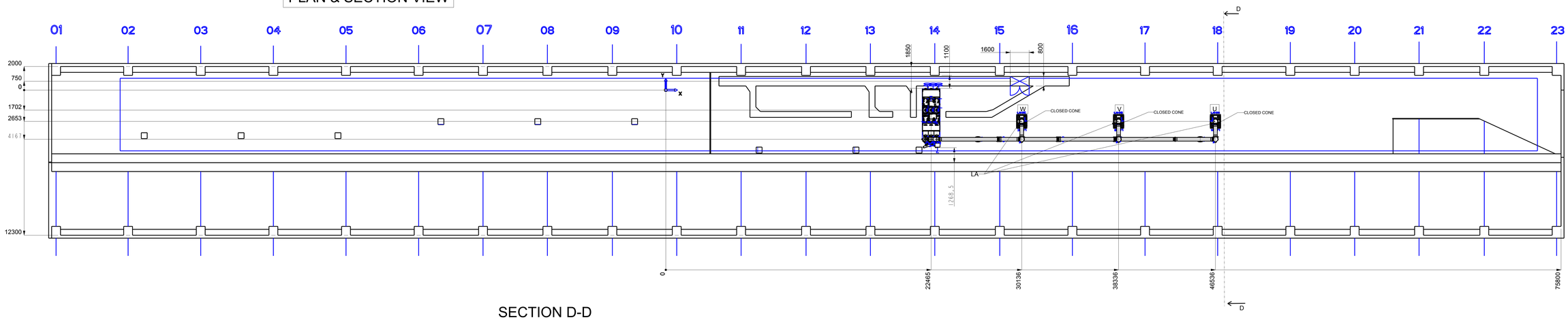

SECTION D-D

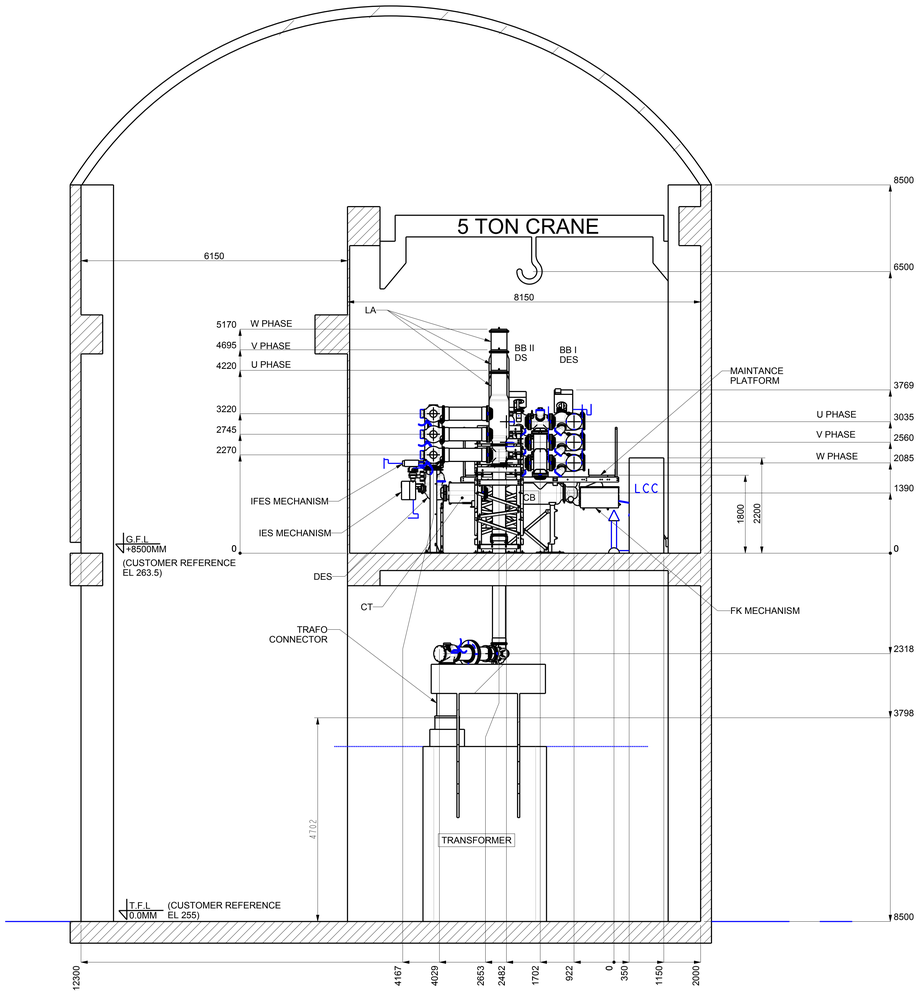

CONE INDICATION VIEW

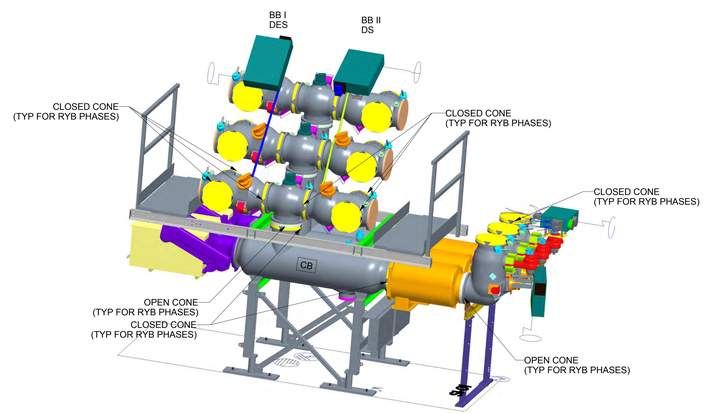

NOTE:-
*CLOSED CONE IS HIGHLIGHT YELLOW COLOR
*OPEN CONE IS HIGHLIGHT WHITE COLOR

BAY-03_GEN TRAFO-01 (GAS MASS Kgs)			
COMPARTMENT	PHASES		
	W PHASE	V PHASE	U PHASE
G0	12	12	12
G1	4	4	4
G2	4	4	4
G9	2	3	4
G4	6	6	6
G6	30	50	71
G7	29	28	27
G8	7	7	7

OWNER:-
LTHP LTD.
(Awholly owned subsidiary of NHPC Ltd.)
Lower Teesta Hydro Power Limited (A wholly owned Subsidiary of NHPC LTD.)

CONSULTANT:-
NHPC Limited
(A Govt. of India Enterprise)

PROJECT:-
4x125 MW TEESTA H.E.PROJECT (STAGE-VI)

VENDOR:-
GE T&D INDIA LTD

LOI REF:-
BHEL-TBG/MM / 61Q2200160 / LTHPL TEESTA (NHPC) / GE

All Dimensions are in MM Unless otherwise specified

BHARAT HEAVY ELECTRICALS LTD.
TRANSMISSION BUSINESS GROUP, NOIDA

	NAME	SIGN	DATE	
DRAWN	DHARANIDHARAN N	DN	04.08.2022	NO. OF VAR
CHECKED	SATHISH KUMAR N	NSK	04.08.2022	
APPROVED	SENTHILKUMAR R	RS	04.08.2022	

DEPT TBEM	UNTOL.DIMS. GR.	SCALE. NTS	WEIGHT (K.G.)	REF. TO.ASSY.DRG.	ITEM NO.	NO OF ITEM
CODE 422						

TITLE:-
220kV EQUIPMENT LAYOUT

GE DRW NO	GD06A000664	REV.
BHEL DRW NO.	TB-DG-415-316-402(3)	R4
NHPC DRW NO.	TSVI-GIS06TD003-A	
SHEET NO. 7	NO.OF SHEET. 13	SIZE. A0

REFERENCE DRAWING NO:-

REV.	DATE	DRAWN.	REV.	DATE	DRAWN. VIJAYAKUMAR.S	REV.	DATE	DRAWN. DHARANIDHARAN N	REV.	DATE	DRAWN. DHARANIDHARAN N	REV.	DATE	DRAWN. DHARANIDHARAN N	REV.	DATE	DRAWN. DHARANIDHARAN N
		CHECKED.	R4	25.11.2022	CHECKED. SATHISH KUMAR N	R3	20.10.2022	CHECKED. SATHISH KUMAR N	R2	07.09.2022	CHECKED. SATHISH KUMAR N	R1	25.08.2022	CHECKED. SATHISH KUMAR N	R0	04.08.2022	CHECKED. SATHISH KUMAR N
		APPROVED.			APPROVED. SENTHILKUMAR R			APPROVED. SENTHILKUMAR R			APPROVED. SENTHILKUMAR R			APPROVED. SENTHILKUMAR R			APPROVED. SENTHILKUMAR R

This drawing and design is the property of GE and must not be copied or lent without prior permission in writing

"Nothing contained in this drawing shall be construed as basis for establishing contractual scope of works unless agreed otherwise in writing."

DRAWING NO. : GD06A000664

BAY-02_LINE-02
PLAN & SECTION VIEW

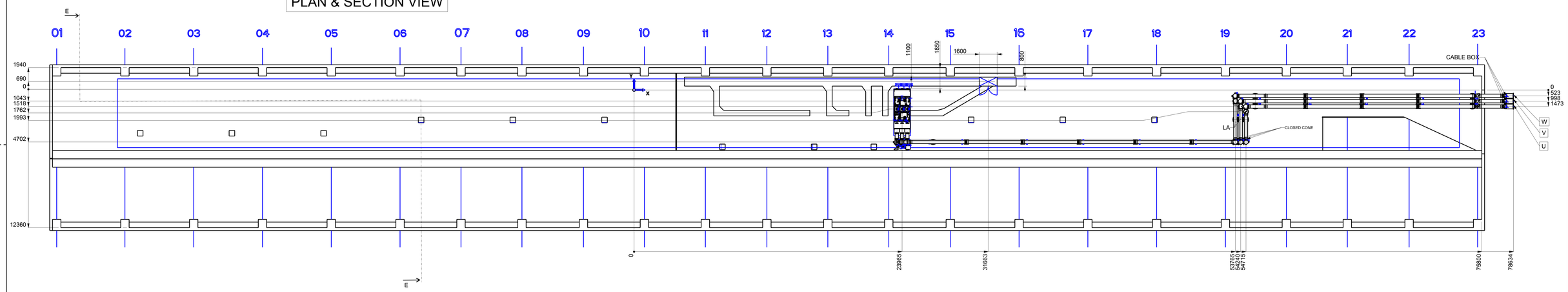

SECTION E-E

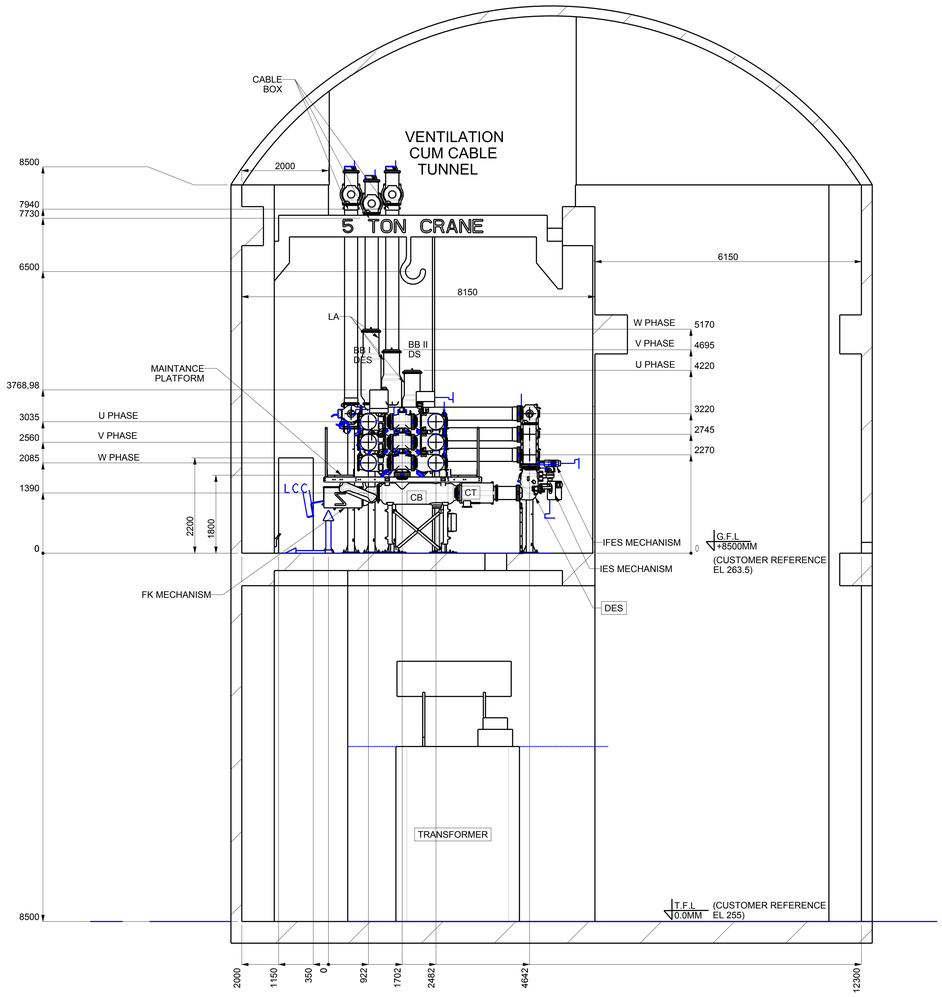

CONE INDICATION VIEW

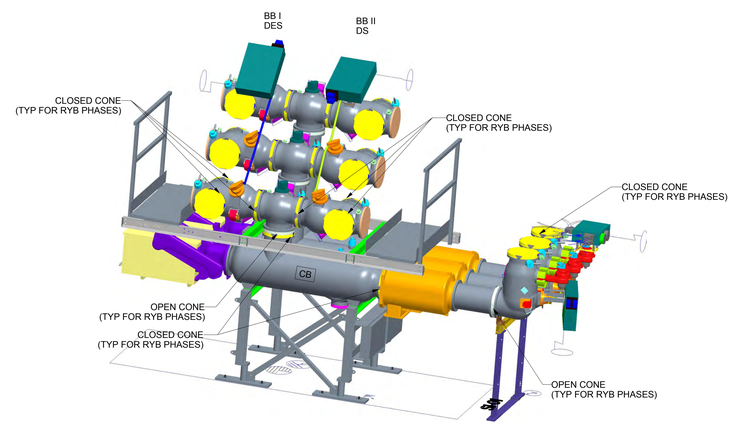

NOTE:-
*CLOSED CONE IS HIGHLIGHT YELLOW COLOR
*OPEN CONE IS HIGHLIGHT WHITE COLOR

BAY-02_LINE-02 (GAS MASS Kgs)			
COMPARTMENT	PHASES		
	W PHASE	V PHASE	U PHASE
G0	12	12	12
G1	4	4	4
G2	4	4	4
G9	2	3	4
G4	7	7	7
G6	89	88	87
G7	84	81	79
G8	28	29	30

OWNER:-
LTHP LTD.
(Awholly owned subsidiary of NHPC Ltd.)
Lower Teesta Hydro Power Limited (A wholly owned Subsidiary of NHPC LTD.)

CONSULTANT:-
NHPC Limited
(A Govt. of India Enterprise)

PROJECT:-
4x125 MW TEESTA H.E.PROJECT (STAGE-VI)

VENDOR:-
GE T&D INDIA LTD

LOI REF:-
BHEL-TBG/MM / 61Q2200160 / LTHPL TEESTA (NHPC) / GE

All Dimensions are in MM Unless otherwise specified

BHARAT HEAVY ELECTRICALS LTD.
TRANSMISSION BUSINESS GROUP, NOIDA

	NAME	SIGN	DATE	NO. OF VAR
DRAWN	DHARANIDHARAN N	DN	04.08.2022	
CHECKED	SATHISH KUMAR N	NSK	04.08.2022	
APPROVED	SENTHILKUMAR R	RS	04.08.2022	

DEPT TBEM	UNTOL.DIMS. GR.	SCALE. NTS	WEIGHT (K.G.)	REF. TO.ASSY.DRG.	ITEM NO.	NO OF ITEM
CODE 422						

TITLE:-
220kV EQUIPMENT LAYOUT

GE DRW NO	GD06A000664
BHEL DRW NO.	TB-DG-415-316-402(3)
NHPC DRW NO.	TSVI-GIS06TD003-A
SHEET NO.	8
NO.OF SHEET.	13

REV. R4

SIZE. A0

REFERENCE DRAWING NO:-

REV.	DATE	DRAWN.	REV.	DATE	DRAWN. VIJAYAKUMAR.S	REV.	DATE	DRAWN. DHARANIDHARAN N	REV.	DATE	DRAWN. DHARANIDHARAN N	REV.	DATE	DRAWN. DHARANIDHARAN N	REV.	DATE	DRAWN. DHARANIDHARAN N
		CHECKED.	R4	25.11.2022	CHECKED. SATHISH KUMAR N	R3	20.10.2022	CHECKED. SATHISH KUMAR N	R2	07.09.2022	CHECKED. SATHISH KUMAR N	R1	25.08.2022	CHECKED. SATHISH KUMAR N	R0	04.08.2022	CHECKED. SATHISH KUMAR N
		APPROVED.			APPROVED. SENTHILKUMAR R			APPROVED. SENTHILKUMAR R			APPROVED. SENTHILKUMAR R			APPROVED. SENTHILKUMAR R			APPROVED. SENTHILKUMAR R

REV. DATE DRAWN. CHECKED. APPROVED.

This drawing and design is the property of GE and must not be copied or lent without prior permission in writing

"Nothing contained in this drawing shall be construed as basis for establishing contractual scope of works unless agreed otherwise in writing."

DRAWING NO. : GD06A000664

BAY-01_LINE-01
PLAN & SECTION VIEW

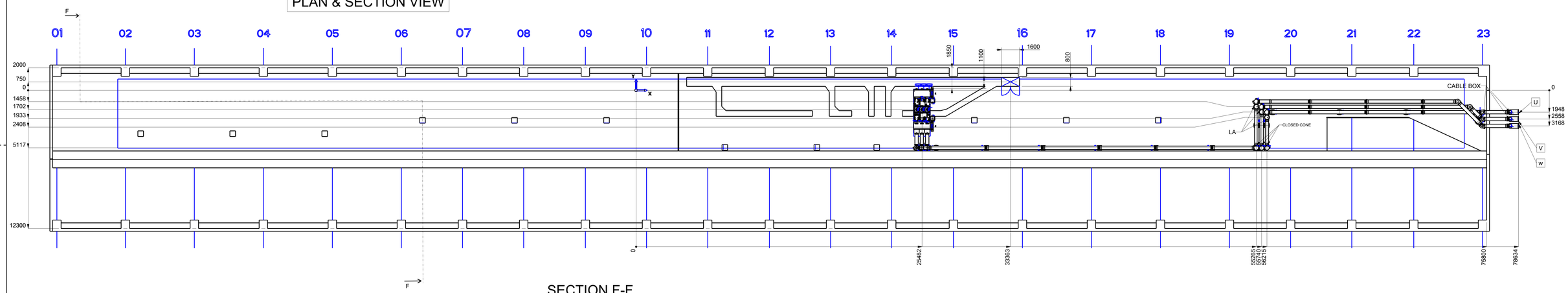

SECTION F-F

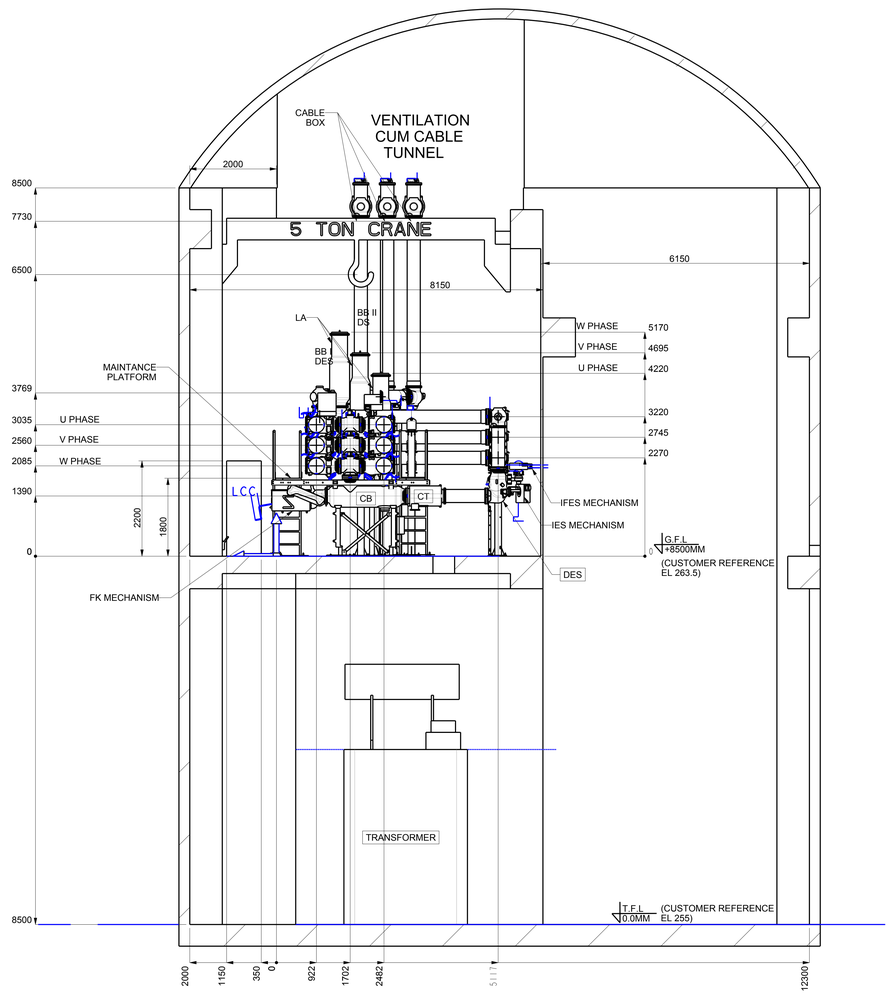

CONE INDICATION VIEW

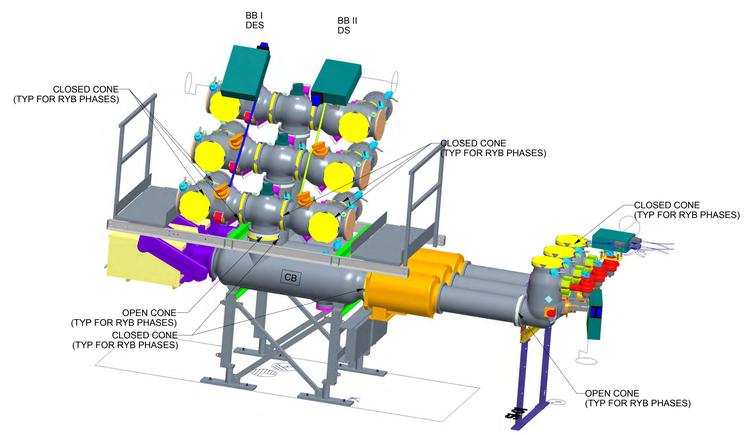

NOTE:-
*CLOSED CONE IS HIGHLIGHT YELLOW COLOR
*OPEN CONE IS HIGHLIGHT WHITE COLOR

BAY-01_LINE-01 (GAS MASS Kgs)			
COMPARTMENT	PHASES		
	W PHASE	V PHASE	U PHASE
G0	12	12	12
G1	4	4	4
G2	4	4	4
G9	2	3	4
G4	8	8	8
G6	89	88	87
G7	84	82	74
G8	27	27	31

OWNER:- LTHP LTD. (Awholly owned subsidiary of NHPC Ltd.)

CONSULTANT:- NHPC Limited (A Govt. of India Enterprise)

PROJECT:- 4x125 MW TEESTA H.E.PROJECT (STAGE-VI)

VENDOR:- GE T&D INDIA LTD

LOI REF:- BHEL-TBG/MM / 61Q2200160 / LTHPL TEESTA (NHPC) / GE

All Dimensions are in MM Unless otherwise specified

BHARAT HEAVY ELECTRICALS LTD. TRANSMISSION BUSINESS GROUP, NOIDA

	NAME	SIGN	DATE	NO. OF VAR
DRAWN	DHARANIDHARAN N	DN	04.08.2022	
CHECKED	SATHISH KUMAR N	NSK	04.08.2022	
APPROVED	SENTHILKUMAR R	RS	04.08.2022	

DEPT TBEM	UNTOL.DIMS. GR.	SCALE. NTS	WEIGHT (K.G.)	REF. TO.ASSY.DRG.	ITEM NO.	NO OF ITEM
CODE 422						

TITLE:- 220kV EQUIPMENT LAYOUT

GE DRW NO	GD06A000664	REV.
BHEL DRW NO.	TB-DG-415-316-402(3)	R4
NHPC DRW NO.	TSVI-GIS06TD003-A	
SHEET NO. 9	NO.OF SHEET. 13	SIZE. A0

REFERENCE DRAWING NO:-

REV.	DATE	DRAWN.	REV.	DATE	DRAWN. VIJAYAKUMAR.S	REV.	DATE	DRAWN. DHARANIDHARAN N	REV.	DATE	DRAWN. DHARANIDHARAN N	REV.	DATE	DRAWN. DHARANIDHARAN N	REV.	DATE	DRAWN. DHARANIDHARAN N	REV.	DATE	DRAWN.
		CHECKED.	R4	25.11.2022	CHECKED. SATHISH KUMAR N	R3	20.10.2022	CHECKED. SATHISH KUMAR N	R2	07.09.2022	CHECKED. SATHISH KUMAR N	R1	25.08.2022	CHECKED. SATHISH KUMAR N	R0	04.08.2022	CHECKED. SATHISH KUMAR N			CHECKED.
		APPROVED.			APPROVED. SENTHILKUMAR R			APPROVED. SENTHILKUMAR R			APPROVED. SENTHILKUMAR R			APPROVED. SENTHILKUMAR R			APPROVED. SENTHILKUMAR R			APPROVED.

This drawing and design is the property of GE and must not be copied or lent without prior permission in writing

"Nothing contained in this drawing shall be construed as basis for establishing contractual scope of works unless agreed otherwise in writing."

DRAWING NO. : GD06A000664

BAY-05_BUS-COUPLER
PLAN & SECTION VIEW

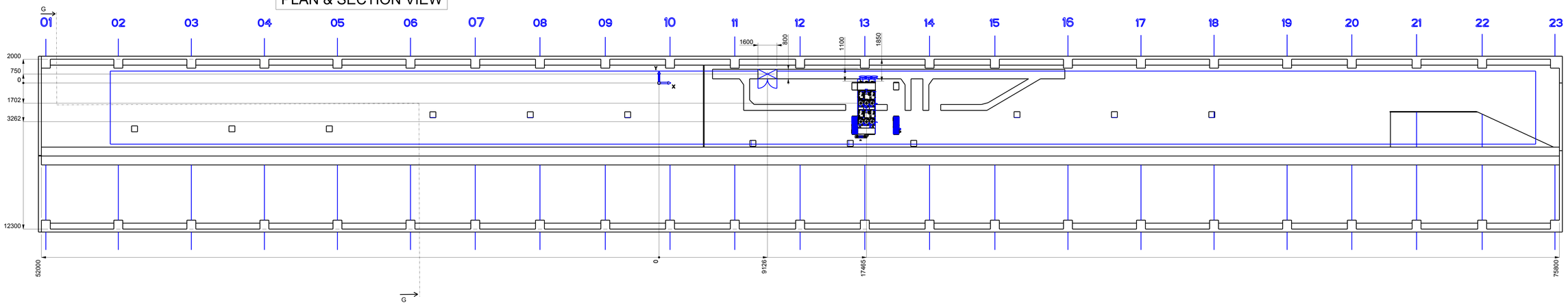

SECTION G-G

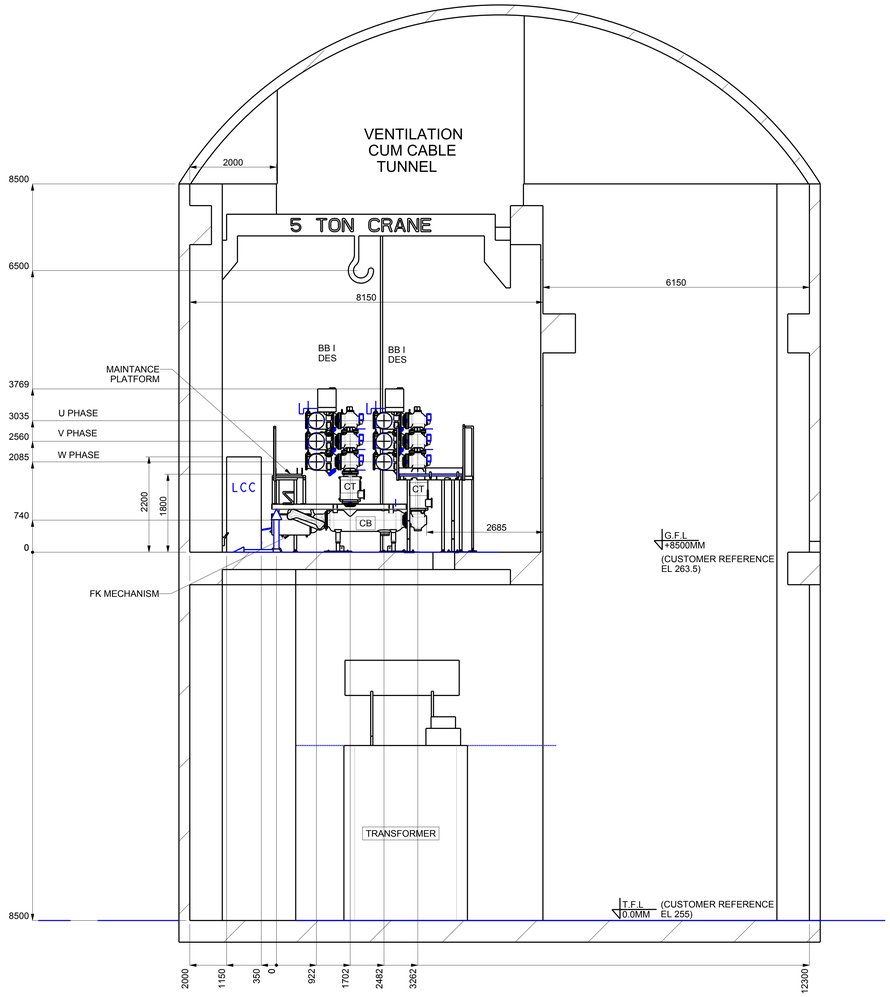

CONE INDICATION VIEW

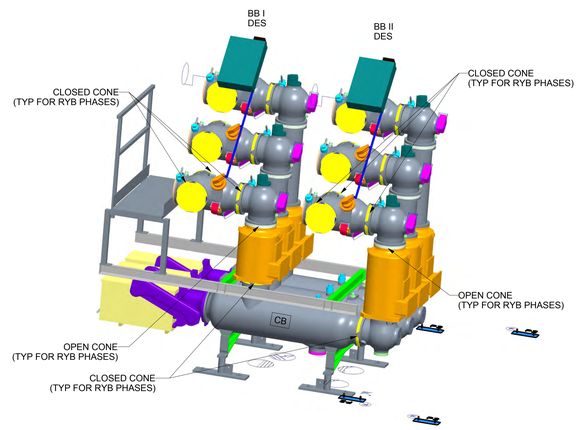

NOTE:-
*CLOSED CONE IS HIGHLIGHT YELLOW COLOR
*OPEN CONE IS HIGHLIGHT WHITE COLOR

BAY-05_BUS-COUPLER (GAS MASS Kgs)			
COMPARTMENT	PHASES		
	W PHASE	V PHASE	U PHASE
G0	12	12	12
G1	4	4	4
G2	4	4	4
G3	3	4	6
G4	5	7	8

OWNER:-
LTHP LTD.
(Awholly owned subsidiary of NHPC Ltd.)
Lower Teesta Hydro Power Limited (A wholly owned Subsidiary of NHPC LTD.)

CONSULTANT:-
NHPC Limited
(A Govt. of India Enterprise)

PROJECT:-
4x125 MW TEESTA H.E.PROJECT (STAGE-VI)

VENDOR:-
GE T&D INDIA LTD

LOI REF:-
BHEL-TBG/MM / 61Q2200160 / LTHPL TEESTA (NHPC) / GE

All Dimensions are in MM Unless otherwise specified

BHARAT HEAVY ELECTRICALS LTD.
TRANSMISSION BUSINESS GROUP, NOIDA

	NAME	SIGN	DATE	
DRAWN	DHARANIDHARAN N	DN	04.08.2022	NO. OF VAR
CHECKED	SATHISH KUMAR N	NSK	04.08.2022	
APPROVED	SENTHILKUMAR R	RS	04.08.2022	

DEPT TBEM	UNTOL.DIMS. GR.	SCALE. NTS	WEIGHT (K.G.)	REF. TO.ASSY.DRG.	ITEM NO.	NO OF ITEM
CODE 422						

TITLE:-
220kV EQUIPMENT LAYOUT

GE DRW NO	GD06A000664	REV.
BHEL DRW NO.	TB-DG-415-316-402(3)	R4
NHPC DRW NO.	TSVI-GIS06TD003-A	
SHEET NO. 10	NO.OF SHEET. 13	

SIZE. A0

REFERENCE DRAWING NO:-

REV.	DATE	DRAWN.	REV.	DATE	DRAWN. VIJAYAKUMAR.S	REV.	DATE	DRAWN. DHARANIDHARAN N	REV.	DATE	DRAWN. DHARANIDHARAN N	REV.	DATE	DRAWN. DHARANIDHARAN N	REV.	DATE	DRAWN. DHARANIDHARAN N	REV.	DATE	DRAWN.
		CHECKED.	R4	25.11.2022	CHECKED. SATHISH KUMAR N	R3	20.10.2022	CHECKED. SATHISH KUMAR N	R2	07.09.2022	CHECKED. SATHISH KUMAR N	R1	25.08.2022	CHECKED. SATHISH KUMAR N	R0	04.08.2022	CHECKED. SATHISH KUMAR N			CHECKED.
		APPROVED.			APPROVED. SENTHILKUMAR R			APPROVED. SENTHILKUMAR R			APPROVED. SENTHILKUMAR R			APPROVED. SENTHILKUMAR R			APPROVED. SENTHILKUMAR R			APPROVED.

This drawing and design is the property of GE and must not be copied or lent without prior permission in writing

"Nothing contained in this drawing shall be construed as basis for establishing contractual scope of works unless agreed otherwise in writing."

DRAWING NO. : GD06A000664

BAY-05A_BUS-VT
PLAN & SECTION VIEW

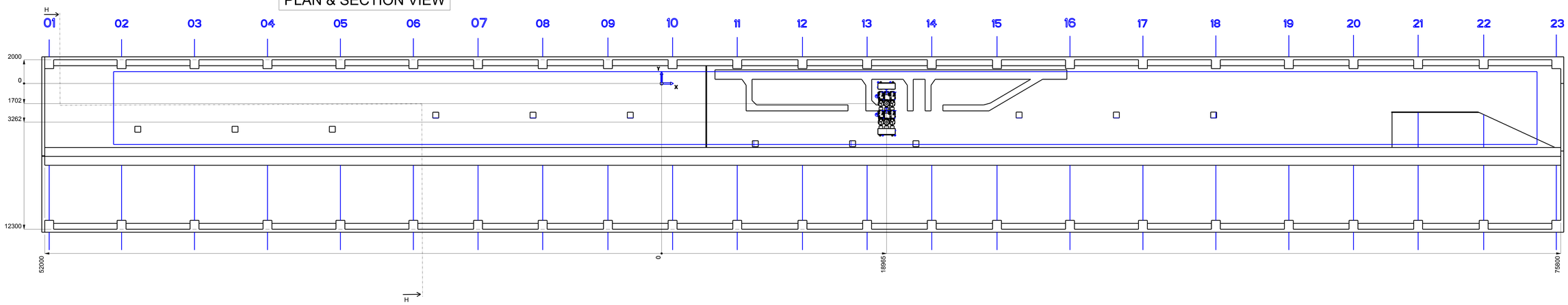

SECTION H-H

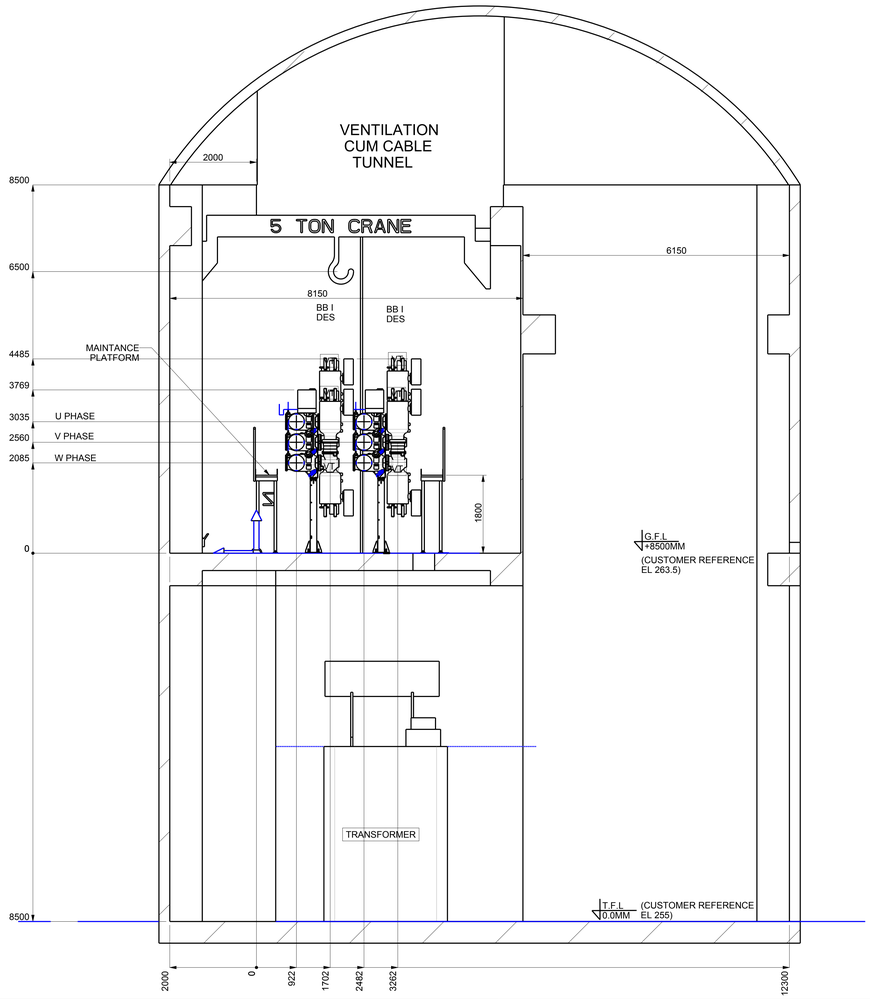

CONE INDICATION VIEW

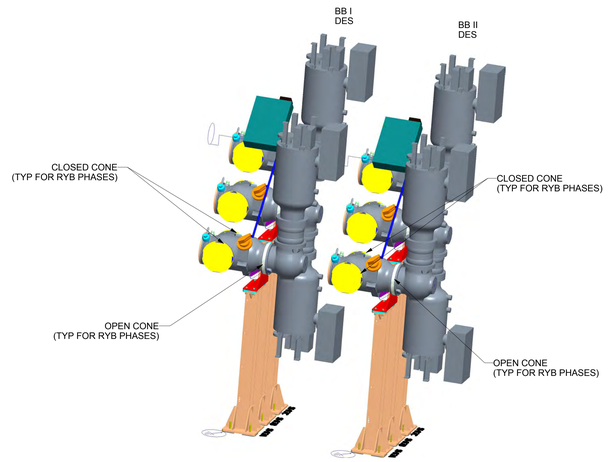

NOTE:-
*CLOSED CONE IS HIGHLIGHT YELLOW COLOR
*OPEN CONE IS HIGHLIGHT WHITE COLOR

BAY-05A_BUS-VT (GAS MASS Kgs)			
COMPARTMENT	PHASES		
	W PHASE	V PHASE	U PHASE
G5	5	5	5
G6	5	5	5
G7	5	5	5
G8	5	5	5

OWNER:-
LTHP LTD.
(Awholly owned subsidiary of NHPC Ltd.)
Lower Teesta Hydro Power Limited (A wholly owned Subsidiary of NHPC LTD.)

CONSULTANT:-
NHPC Limited
(A Govt. of India Enterprise)

PROJECT:-
4x125 MW TEESTA H.E.PROJECT (STAGE-VI)

VENDOR:-
GE T&D INDIA LTD

LOI REF:-
BHEL-TBG/MM / 61Q2200160 / LTHPL TEESTA (NHPC) / GE

All Dimensions are in MM Unless otherwise specified

BHARAT HEAVY ELECTRICALS LTD.
TRANSMISSION BUSINESS GROUP, NOIDA

	NAME	SIGN	DATE
DRAWN	DHARANIDHARAN N	DN	04.08.2022
CHECKED	SATHISH KUMAR N	NSK	04.08.2022
APPROVED	SENTHILKUMAR R	RS	04.08.2022

NO. OF VAR

DEPT	TBEM	UNTOL.DIMS. GR.	SCALE. NTS	WEIGHT (K.G.)	REF. TO.ASSY.DRG.	ITEM NO.	NO OF ITEM
CODE	422						

TITLE:-
220kV EQUIPMENT LAYOUT

GE DRW NO	GD06A000664
BHEL DRW NO.	TB-DG-415-316-402(3)
NHPC DRW NO.	TSVI-GIS06TD003-A
SHEET NO.	11
NO.OF SHEET.	13

REV. R4

SIZE. A0

REFERENCE DRAWING NO:-

REV.	DATE	DRAWN.	REV.	DATE	DRAWN. VIJAYAKUMAR.S	REV.	DATE	DRAWN. DHARANIDHARAN N	REV.	DATE	DRAWN. DHARANIDHARAN N	REV.	DATE	DRAWN. DHARANIDHARAN N	REV.	DATE	DRAWN. DHARANIDHARAN N	REV.	DATE	DRAWN.
		CHECKED.	R4	25.11.2022	CHECKED. SATHISH KUMAR N	R3	20.10.2022	CHECKED. SATHISH KUMAR N	R2	07.09.2022	CHECKED. SATHISH KUMAR N	R1	25.08.2022	CHECKED. SATHISH KUMAR N	R0	04.08.2022	CHECKED. SATHISH KUMAR N			CHECKED.
		APPROVED.			APPROVED. SENTHILKUMAR R			APPROVED. SENTHILKUMAR R			APPROVED. SENTHILKUMAR R			APPROVED. SENTHILKUMAR R			APPROVED. SENTHILKUMAR R			APPROVED.

This drawing and design is the property of GE and must not be copied or lent without prior permission in writing

"Nothing contained in this drawing shall be construed as basis for establishing contractual scope of works unless agreed otherwise in writing."

DRAWING NO. : GD06A000664

GIS FLOOR CUTOUT DETAILS

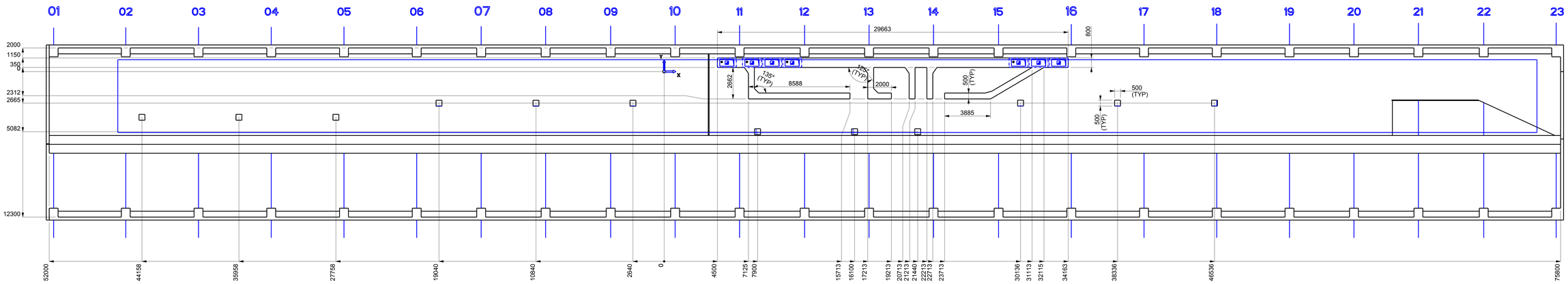

GIS FLOOR EOT CRANE MOVEMENTS

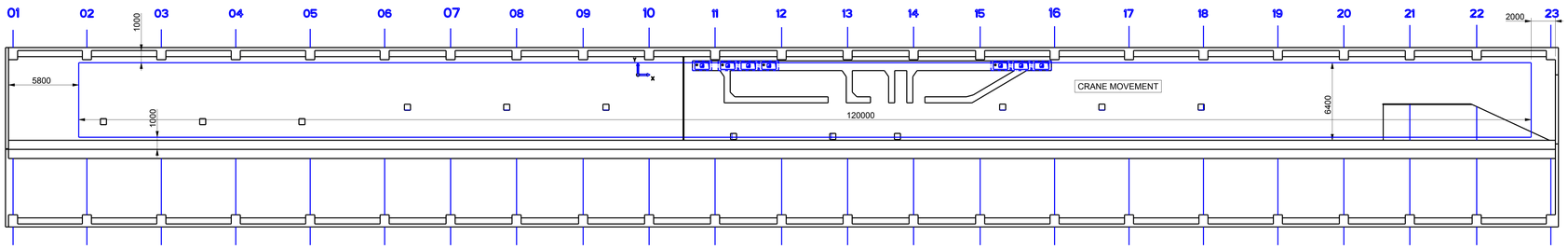

OWNER:-

LTHP LTD.
(Awholly owned subsidiary of NHPC Ltd.)

Lower Teesta Hydro Power Limited
(A wholly owned Subsidiary of NHPC LTD.)

CONSULTANT:-

NHPC Limited
(A Govt. of India Enterprise)

PROJECT:-

4x125 MW TEESTA H.E.PROJECT (STAGE-VI)

VENDOR:-

GE T&D INDIA LTD

LOI REF:-

BHEL-TBG/MM / 61Q2200160 / LTHPL TEESTA (NHPC) / GE

All Dimensions are in MM Unless otherwise specified

BHARAT HEAVY ELECTRICALS LTD.
TRANSMISSION BUSINESS GROUP, NOIDA

	NAME	SIGN	DATE	
DRAWN	DHARANIDHARAN N	DN	04.08.2022	NO. OF VAR
CHECKED	SATHISH KUMAR N	NSK	04.08.2022	
APPROVED	SENTHILKUMAR R	RS	04.08.2022	

DEPT TBEM	UNTOL.DIMS. GR.	SCALE. NTS	WEIGHT (K.G.)	REF. TO.ASSY.DRG.	ITEM NO.	NO OF ITEM
CODE 422						

TITLE:-

220kV EQUIPMENT LAYOUT

GE DRW NO	GD06A000664	REV.
BHEL DRW NO.	TB-DG-415-316-402(3)	R4
NHPC DRW NO.	TSVI-GIS06TD003-A	
SHEET NO. 12	NO.OF SHEET. 13	

SIZE: A0

REFERENCE DRAWING NO:-

REV.	DATE	DRAWN.	REV.	DATE	DRAWN. VIJAYAKUMAR.S	REV.	DATE	DRAWN. DHARANIDHARAN N	REV.	DATE	DRAWN. DHARANIDHARAN N	REV.	DATE	DRAWN. DHARANIDHARAN N	REV.	DATE	DRAWN. DHARANIDHARAN N	REV.	DATE	DRAWN.
		CHECKED.	R4	25.11.2022	CHECKED. SATHISH KUMAR N	R3	20.10.2022	CHECKED. SATHISH KUMAR N	R2	07.09.2022	CHECKED. SATHISH KUMAR N	R1	25.08.2022	CHECKED. SATHISH KUMAR N	R0	04.08.2022	CHECKED. SATHISH KUMAR N			CHECKED.
		APPROVED.			APPROVED. SENTHILKUMAR R			APPROVED. SENTHILKUMAR R			APPROVED. SENTHILKUMAR R			APPROVED. SENTHILKUMAR R			APPROVED. SENTHILKUMAR R			APPROVED.

This drawing and design is the property of GE and must not be copied or lent without prior permission in writing

"Nothing contained in this drawing shall be construed as basis for establishing contractual scope of works unless agreed otherwise in writing."

DRAWING NO. : GD06A000664

3D VIEW

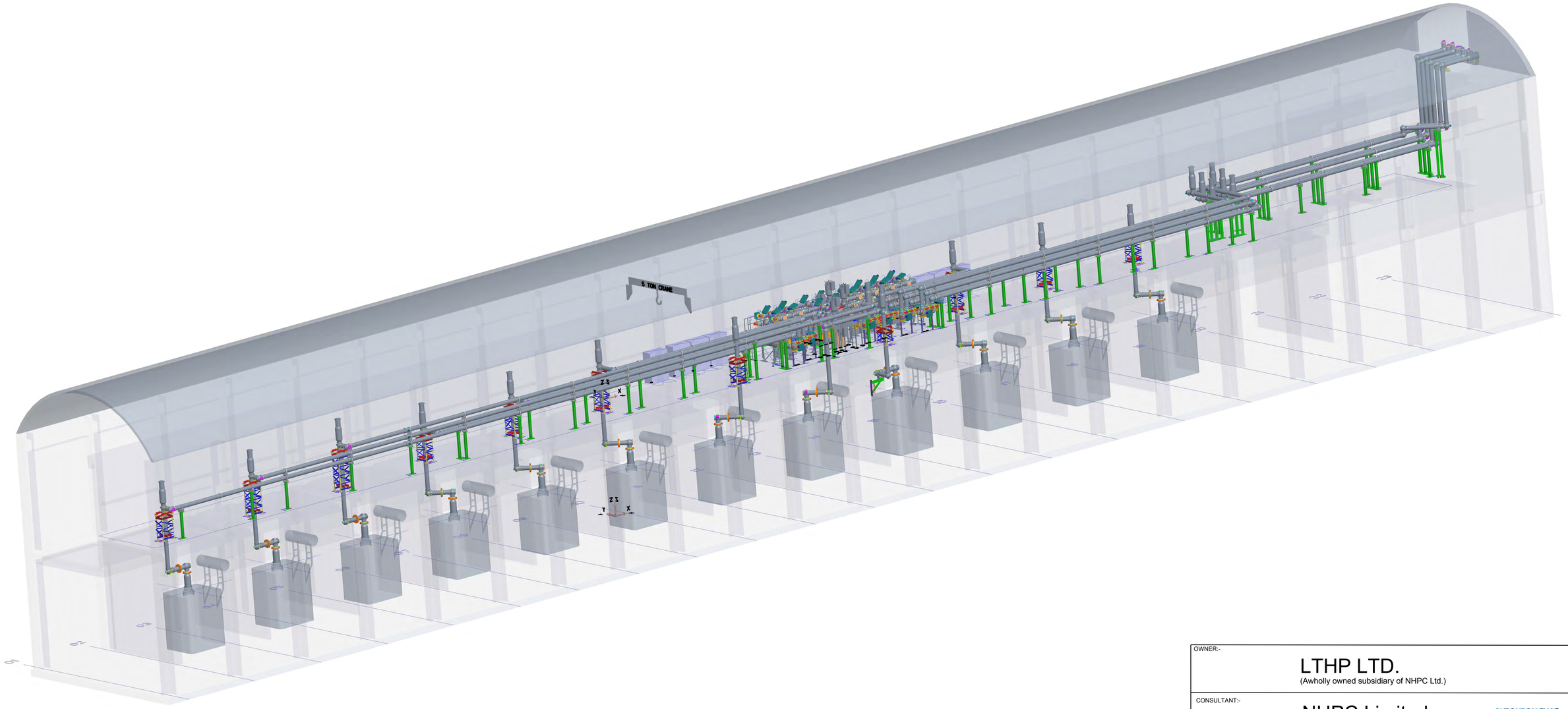

OWNER:-

LTHP LTD.
(Awholly owned subsidiary of NHPC Ltd.)

CONSULTANT:-

NHPC Limited
(A Govt. of India Enterprise)

PROJECT:-

4x125 MW TEESTA H.E.PROJECT (STAGE-VI)

VENDOR:-

GE T&D INDIA LTD

LOI REF:-

BHEL-TBG/MM / 61Q2200160 / LTHPL TEESTA (NHPC) / GE

All Dimensions are in MM Unless otherwise specified

BHARAT HEAVY ELECTRICALS LTD.
TRANSMISSION BUSINESS GROUP, NOIDA

	NAME	SIGN	DATE	NO. OF VAR
DRAWN	DHARANIDHARAN N	DN	04.08.2022	
CHECKED	SATHISH KUMAR N	NSK	04.08.2022	
APPROVED	SENTHILKUMAR R	RS	04.08.2022	

DEPT TBEM	UNTOL.DIMS. GR.	SCALE. NTS	WEIGHT (K.G.)	REF. TO.ASSY.DRG.	ITEM NO.	NO OF ITEM
CODE 422						

TITLE:-

220kV EQUIPMENT LAYOUT

GE DRW NO	GD06A000664
BHEL DRW NO.	TB-DG-415-316-402(3)
NHPC DRW NO.	TSVI-GIS06TD003-A
REV.	R4
SHEET NO.	13
NO.OF SHEET.	13

SIZE. A0

REFERENCE DRAWING NO:-

REV.	DATE	DRAWN.	REV.	DATE	DRAWN. VIJAYAKUMAR.S	REV.	DATE	DRAWN. DHARANIDHARAN N	REV.	DATE	DRAWN. DHARANIDHARAN N	REV.	DATE	DRAWN. DHARANIDHARAN N	REV.	DATE	DRAWN. DHARANIDHARAN N
		CHECKED.	R4	25.11.2022	CHECKED. SATHISH KUMAR N	R3	20.10.2022	CHECKED. SATHISH KUMAR N	R2	07.09.2022	CHECKED. SATHISH KUMAR N	R1	25.08.2022	CHECKED. SATHISH KUMAR N	R0	04.08.2022	CHECKED. SATHISH KUMAR N
		APPROVED.			APPROVED. SENTHILKUMAR R			APPROVED. SENTHILKUMAR R			APPROVED. SENTHILKUMAR R			APPROVED. SENTHILKUMAR R			APPROVED. SENTHILKUMAR R

This drawing and design is the property of GE and must not be copied or lent without prior permission in writing

"Nothing contained in this drawing shall be construed as basis for establishing contractual scope of works unless agreed otherwise in writing."

FIRST ANGLE PROJECTION

ALL DIMENSIONS ARE IN mm

DRG. NO. TB-3-415-316-004

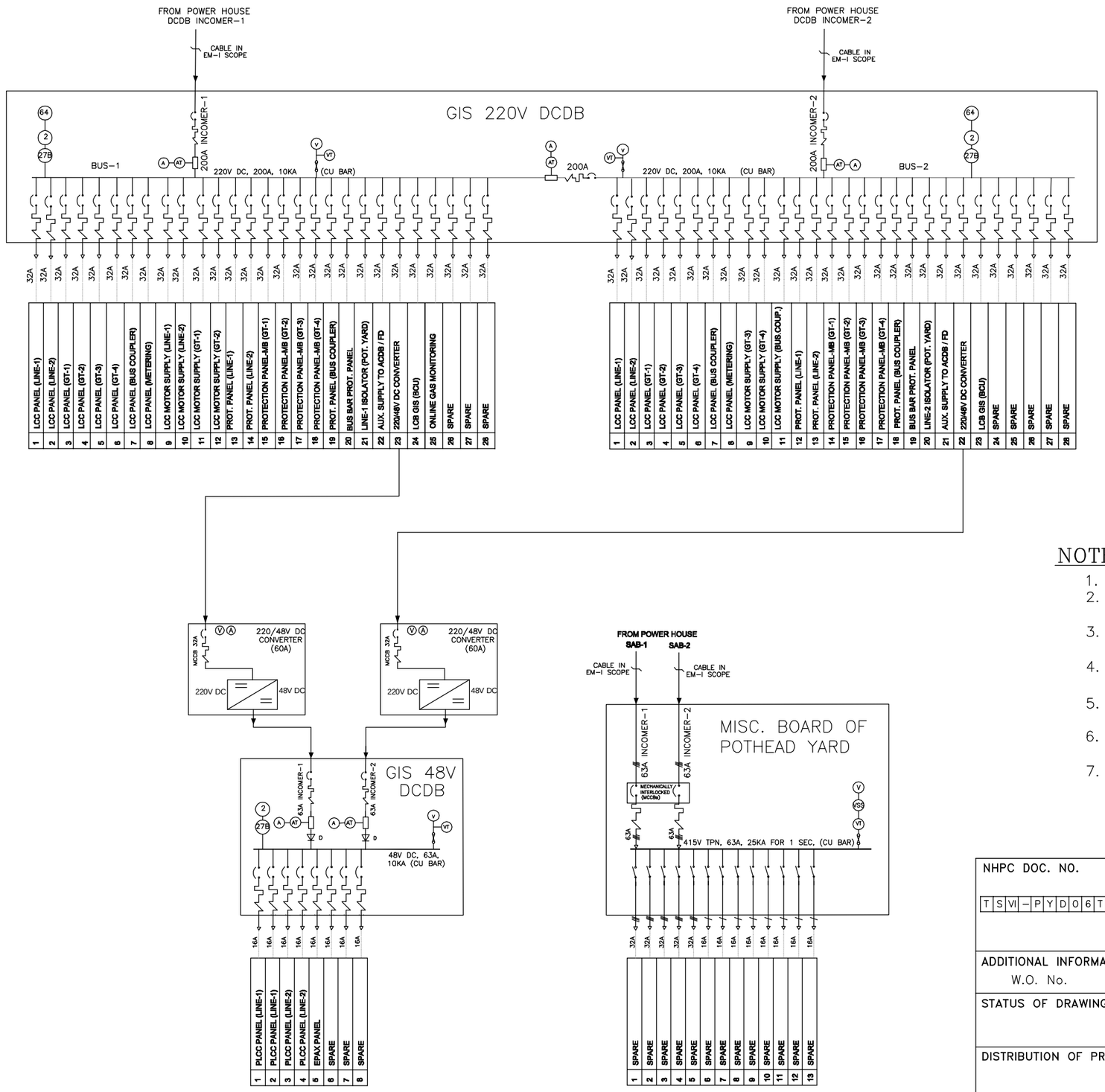

Minimum indicative requirement of Analog signals , Potential Free contacts & Command signals which should be available at respective equipment for remote indication & control from Auxiliary BCU located in S/s control room		
EQUIPMENT	ANALOG SIGNAL FOR REMOTE INDICATION	POTENTIAL FREE CONTACT FOR REMOTE INDICATION
MISC. AC BOARD (FOR POTHEAD YARD)		
	BUS VOLTAGE	I/C-1 Breaker ON/OFF
		I/C-2 Breaker ON/OFF
220V DCDB		
	DCDB BUS-1 Voltage	I/C-1 Breaker ON/OFF
	DCDB BUS-2 Voltage	I/C-2 Breaker ON/OFF
	Incomer-1 Current from PH DCDB	B/C Breaker ON/OFF
	Incomer-2 Current from Battery set-2	BUS-1 U/V ALARM
	BUS COUPLER CURRENT	BUS-2 U/V ALARM
		DC E/F ALARM
48V DCDB		
	BUS VOLTAGE	U/V ALARM

LEGEND/SYMBOLS :-

	MCCB WITH THERMAL INSTANTENIOUS RELEASE	A	AMMETER WITH SHUNT
A	DIGITAL AMMETER	27B	DC UNDER VOLTAGE RELAY
V	DIGITAL VOLTMETER	64	GROUND DETECTOR RELAY
	MCB WITH THERMAL INSTANTENIOUS RELEASE	AT	4-20mA CURRENT TRANSDUCER (DUAL OUTPUT)
SAB	STATION AUXILIARY BOARD	VT	4-20mA VOLTAGE TRANSDUCER (DUAL OUTPUT)
VSS	VOLTAGE SELECTOR SWITCH		FUSE
D	BLOCKING DIODE	2	TIMER

NOTES:-

1. NO TWO AC SOURCE SHALL BE PARALLELED AT ANY STAGE.
2. FOR COMPLETE DESCRIPTION OF EACH TYPE OF MODULE, PLEASE REFER TECHNICAL SPECIFICATION.
3. ALL THE FEEDERS SHOWN IN THE SLD INCLUDING FUTURE/ SPARE ARE INCLUDED IN SCOPE OF SUPPLY.
4. TRANSDUCERS/AUX. CONTACTS REQUIRED FOR ANALOGUE AND DIGITAL INPUT SHALL BE AN INTEGRAL PART OF LT AC/DC BOARDS.
5. ALL DIGITAL / ANALOG INPUTS/OUTPUTS REQUIRED FOR SAS SHALL BE CONSIDERED.
6. UNLESS SPECIFIED, SOURCE 1 WILL BE FED FROM BUS 1 AND SOURCE2 FROM BUS 2.
7. RATING OF BUSBAR/FEEDER INDICATED IN THIS DRAWING ARE MIN. REQUIREMENT AND MAY BE INCREASED DURING DETAILED ENGINEERING IF FOUND INADEQUATE WITH RESPECT TO OFFERED LOADS/SYSTEM.

NHPC DOC. NO. TSVI-PYD06TD0004-A

ADDITIONAL INFORMATION
W.O. No. –

STATUS OF DRAWING
CONTRACT

DISTRIBUTION OF PRINTS

OWNER: LTHP LTD. (A wholly owned subsidiary of NHPC Ltd.)

CONSULTANT: एन एच पी सी लिमिटेड, भारत सरकार का उपक्रम, NHPC Limited (A Govt. of India Enterprise)

PROJECT: 4x125 MW TEESTA H.E.PROJECT (STAGE-VI)

भारत हेवी इलेक्ट्रिकल्स लिमिटेड, ट्रांसमिशन परियोजना विभाग, भोपाल
BHARAT HEAVY ELECTRICALS LTD. TRANSMISSION BUSINESS GROUP, NOIDA

	नाम/ NAME	हस्ता/ SIGN	दिनांक/DATE	पे.नि. की संख्या NO. OF VAR
बनाया DRN	GV		12.04.22	
जाँचा CKD	GV		12.04.22	
स्वीकृत APPD	VK		12.04.22	

REV.	DATE		
01	17.05.22	ALTERED	GV
		CHECKED	GV
		APPROVED	VK

REVISED AS PER NHPC COMMENTS.

REV.	DATE	ALTERED
		CHECKED
		APPROVED

विभाग DEPT TBEM; कोड CODE 422; उन. टल. नाप की श्रेणी UNTOL.DIMS. GR.; अनुपात SCALE 1:400; भार WEIGHT (K.G.); उसे. ड्राईंग का संदर्भ REF. TO ASSY. DRG.; मद क. ITEM NO.; मद संख्या NO. OF ITEM

शीर्षक/ TITLE: SINGLE LINE DIAGRAM OF 415V AC AND DC DISTRIBUTION BOARD

ड्राईंग क./DRAWING NO. TB-3-415-316-004; पुन./REV 00

पृष्ठ क./SHT. No. 1; पृष्ठों की संख्या/NO. OF SHT. 1

REF. DRG. NO. | SIGN AND DATE | INVENTORY NO.

A2

FIRST ANGLE PROJECTION

ALL DIMENSIONS ARE IN mm

DRG. NO. TB-2-415-316-005

ERECTION KEY DIAGRAM

SHEET NO.	DESCRIPTION
SHEET-1	COVER SHEET
SHEET-2	PLAN VIEW
SHEET-3	SECTION VIEW

REMARKS : PLEASE REFER ANNEXURE FOR BILL OF QUANTITIES OF CLAMPS & CONNECTOR INCLUDING STRING HARDWARES

NOTE:-

1. ALL DIMENSIONS ARE IN mm UNLESS OTHERWISE SPECIFIED.
2. FOR 220KV TWIN/QUAD MOOSE CONDUCTOR STRINGING, RIGID SPACERS SHALL BE PROVIDED @ 2500MM.
3. ALL THE JUMPERS SHALL BE ALLOWED TO TAKE NATURAL CATENARY WITHOUT ANY ADDITIONAL PULL. JUMPERS SHALL BE SHORTEST POSSIBLE SO THAT PHASE TO EARTH CLEARANCE SHALL BE MAINTAINED FOR ALL THE JUMPERS CONNECTION.
4. LOCATION OF WAVE TRAP SHOWN ARE INDICATIVE ONLY. THE EXACT LOCATION WILL BE DECIDED DURING COMMISSIONING TO SUIT PLCC REQUIREMENTS.
5. SUB-CONDUCTOR SPACING FOR TWIN MOOSE CONDUCTOR IS 250 MM FOR 220KV SYSTEM.
6. EARTH WIRE AND ASSOCIATED CLAMPS ARE NOT IN BHEL SCOPE. HOWEVER, 2 NOS. RISERS FOR EARTHING OF SHIELD WIRE SHALL BE PROVIDED FOR EACH PEAK TOWER.
7. REFER DETAILED BOQ FOR DESCRIPTION OF CLAMPS AND CONNECTORS.

BOQ: CLAMPS AND CONNECTORS (IN NOS.)

EKD ID	LINE-1	LINE-2
2BU	3	3
2CT	6	6
2IS	6	6
2WT	4	4
2PI	1	1
2VT	3	3
2LA	3	3
2PG	6	6
2T1	12	12
2S2	6	6
2S4	18	18

BOQ: STRING INSULATOR HARDWARE (IN NOS.)

SSSQ	3	3

NHPC DOC. NO. TSVI-PYD06TD005-B

ADDITIONAL INFORMATION
W.O. No. –

STATUS OF DRAWING
CONTRACT

DISTRIBUTION OF PRINTS

OWNER: LTHP LTD. (A wholly owned subsidiary of NHPC Ltd.)

CONSULTANT: एन एच पी सी लिमिटेड भारत सरकार का उपक्रम NHPC Limited (A Govt. of India Enterprise)

PROJECT: 4x125 MW TEESTA H.E.PROJECT (STAGE-VI) 220kV GIS, XLPE CABLES & POTHEAD YARD

बीएचईएल BHEL भारत हेवी इलेक्ट्रिकल्स लिमिटेड ट्रांसमिशन परियोजना विभाग, भोपाल BHARAT HEAVY ELECTRICALS LTD. TRANSMISSION BUSINESS GROUP, NOIDA

	नाम/ NAME	हस्ता./ SIGN	दिनांक/DATE	ये.रि. की संख्या NO. OF VAR
बनाया DRN	SY	Sd/-	24.05.22	
जाँचा CKD	GV	Sd/-	24.05.22	
स्वीकृत APPD	VK	Sd/-	24.05.22	

REV.	DATE	ALTERED	REV.	DATE	ALTERED	REV.	DATE	ALTERED	REV.	DATE	ALTERED
		CHECKED			CHECKED			CHECKED			CHECKED
		APPROVED			APPROVED			APPROVED			APPROVED

REV.	DATE		
01	04.07.22	ALTERED	GV
		CHECKED	GV
		APPROVED	VK

DRAWING REVISED AS PER NHPC COMMENTS DTD. 21.06.22

विभाग DEPT TBEM | कोड CODE 422 | उन. टल. माप की श्रेणी UNTOL.DIMS. GR. | उलुपात SCALE 1:400 | भार किग्रा. WEIGHT (K.G.) | उसे. ड्राईंग का संदर्भ REF. TO ASSY. DRG. | मद क. ITEM NO. | मद संख्या NO. OF ITEM

शीर्षक/ TITLE: ERECTION KEY DIAGRAM

ड्राईंग क./DRAWING NO. TB-2-415-316-005 | पुन./ REV 01

पृष्ठ क./ SHT. No. 01 | पृष्ठों की संख्या/NO. OF SHT. 03

REF. DRG. NO. | SIGN AND DATE | INVENTORY NO.

A2

FIRST ANGLE PROJECTION

ALL DIMENSIONS ARE IN mm

DRG. NO. TB-2-415-316-005

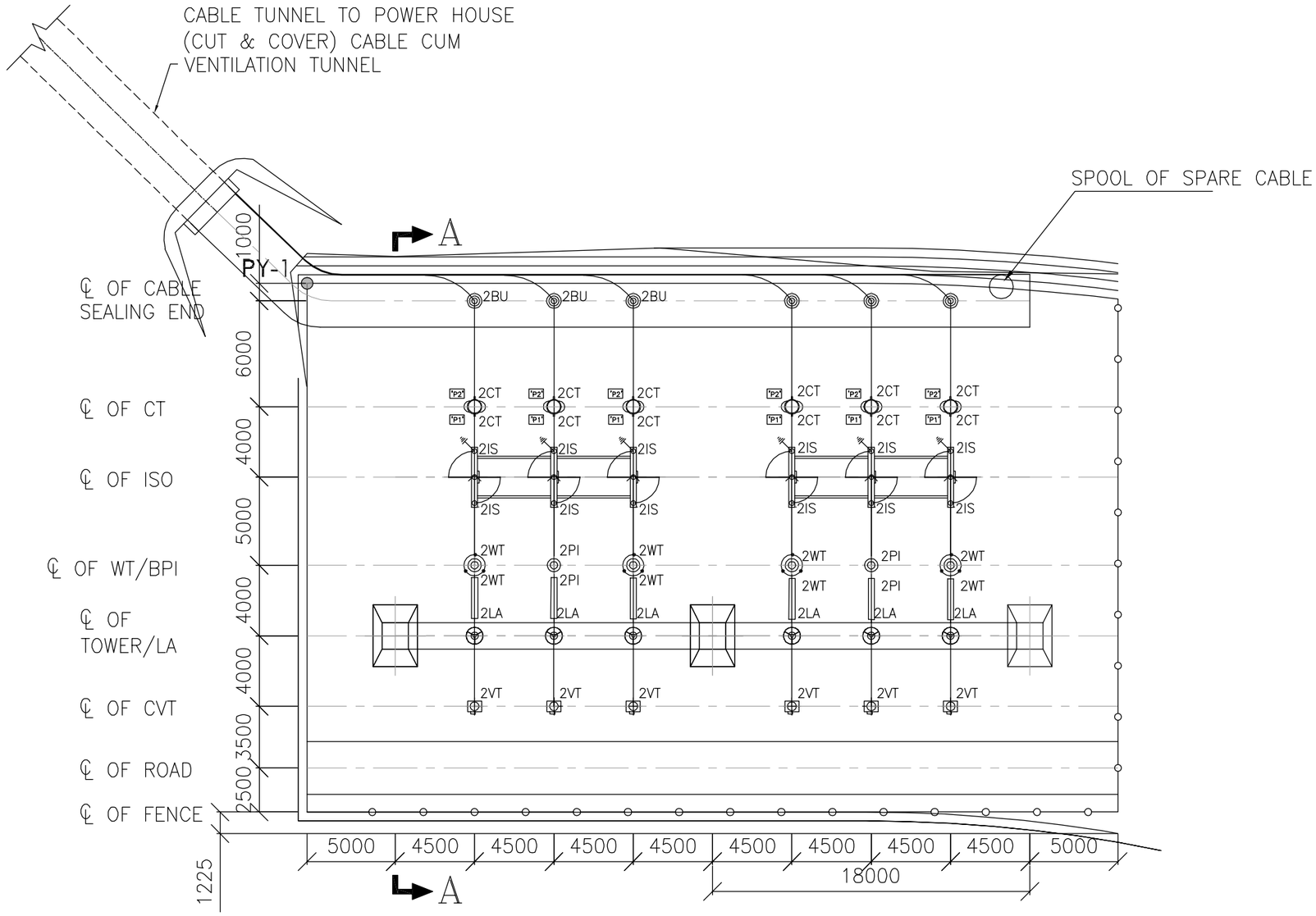

PLAN VIEW

S.NO.	DESCRIPTION	UNIT	245kV
1.	PHASE TO PHASE	mm	2100
2.	PHASE TO EARTH	mm	2100
3.	MIN. DISTANCE OF THE LOWEST EARTH PART OF INSULATOR SUPPORTING LIVE CONDUCTORS FROM GROUND	mm	2550
4.	SECTION CLEARANCE	mm	5000
5.	HEIGHT OF CONDUCTOR CENTER LINE OF FIRST LEVEL FROM PLINTH LEVEL	mm	5500
6.	PLINTH HEIGHT	mm	300
7.	SUB CONDUCTOR SPACING	mm	250

SYSTEM PARAMETERS	245kV
LIGHTNING IMPULSE WITHSTAND VOLTAGE PHASE TO EARTH/ ACROSS OPEN SWITCHING DISTANCE AND BETWEEN PHASES (kVp)	1050/1200
MIN POWER FREQUENCY WITHSTAND VOLTAGE PHASE TO EARTH/ ACROSS OPEN SWITCHING DISTANCE AND BETWEEN PHASES (kVrms)	460/530
HIGHER SYSTEM VOLTAGE (kV)	245
CREEPAGE DISTANCE (mm/kV)	25
SHORT CIRCUIT CAPABILITY (kA FOR 1SEC)	40

LEGENDS:–

- BHEL SCOPE
- NOT IN BHEL SCOPE
- FENCE OF POTHEAD YARD

NOTE:–

1. ALL DIMENSIONS ARE IN MM, UNLESS OTHERWISE SPECIFIED.
2. 220KV POTHEAD YARD SHALL BE LOCATED AT EL 259.00M.
3. NHPC TO CHECK THE LOCATION OF DEAD END TRANSMISSION LINE TOWER.
4. NHPC TO ENSURE TO PROVIDE ACCESS TO 220KV POTHEAD YARD AT EL 259M.
5. GIS AND XLPE CABLE ROUTING SHALL BE SHOWN IN SEPARATE DRAWINGS.
6. WAVE TRAP (PEDESTAL) IS CONSIDERED IN R&B PHASES OF LINES.
7. PROTECTION AGAINST DIRECT LIGHTNING STROKE FOR POTHEAD YARD AREA SHALL BE BY TOWER SPIKE.
8. CIVIL WORKS IN NHPC SCOPE.
9. DETAILS OF CABLE TUNNEL TO BE PROVIDED BY NHPC.

NHPC DOC. NO. TSVI–PYD06TD005–B

ADDITIONAL INFORMATION
W.O. No. –

STATUS OF DRAWING
CONTRACT

DISTRIBUTION OF PRINTS

OWNER: LTHP LTD. (A wholly owned subsidiary of NHPC Ltd.)

CONSULTANT: एन एच पी सी लिमिटेड भारत सरकार का उपक्रम NHPC Limited (A Govt. of India Enterprise)

PROJECT: 4x125 MW TEESTA H.E.PROJECT (STAGE–VI) 220kV GIS, XLPE CABLES & POTHEAD YARD

भारत हेवी इलेक्ट्रिकल्स लिमिटेड ट्रांसमिशन परियोजना विभाग, भोपाल
BHARAT HEAVY ELECTRICALS LTD. TRANSMISSION BUSINESS GROUP, NOIDA

	नाम/ NAME	हस्ता./ SIGN	दिनांक/DATE	ले.रि. की संख्या NO. OF VAR
बनाया DRN	SY	Sd/–	24.05.22	
जाँचा CKD	GV	Sd/–	24.05.22	
स्वीकृत APPD	VK	Sd/–	24.05.22	

REV.	DATE	ALTERED	REV.	DATE	ALTERED	REV.	DATE	ALTERED	REV.	DATE	ALTERED
		CHECKED			CHECKED			CHECKED			CHECKED
		APPROVED			APPROVED			APPROVED			APPROVED

REV.	DATE		
01	04.07.22	ALTERED	GV
		CHECKED	GV
		APPROVED	VK

DRAWING REVISED AS PER NHPC COMMENTS DTD. 21.06.22

विभाग DEPT TBEM | कोड CODE 422 | अन. टल. माप की श्रेणी UNTOL.DIMS. GR. | अनुपात SCALE 1:400 | भार WEIGHT (K.G.)

शीर्षक/ TITLE: ERECTION KEY DIAGRAM

उसे. ड्रॉइंग का संदर्भ REF. TO ASSY. DRG. | मद क. ITEM NO. | मद संख्या NO. OF ITEM

ड्रॉइंग क्र./DRAWING NO. TB–2–415–316–005 | पुन./REV 01

पृष्ठ क./SHT. No. 02 | पृष्ठों की संख्या/NO. OF SHT. 03

REF. DRG. NO. | SIGN AND DATE | INVENTORY NO.

A2

FIRST ANGLE PROJECTION

ALL DIMENSIONS ARE IN mm

DRG. NO. TB-2-415-316-005

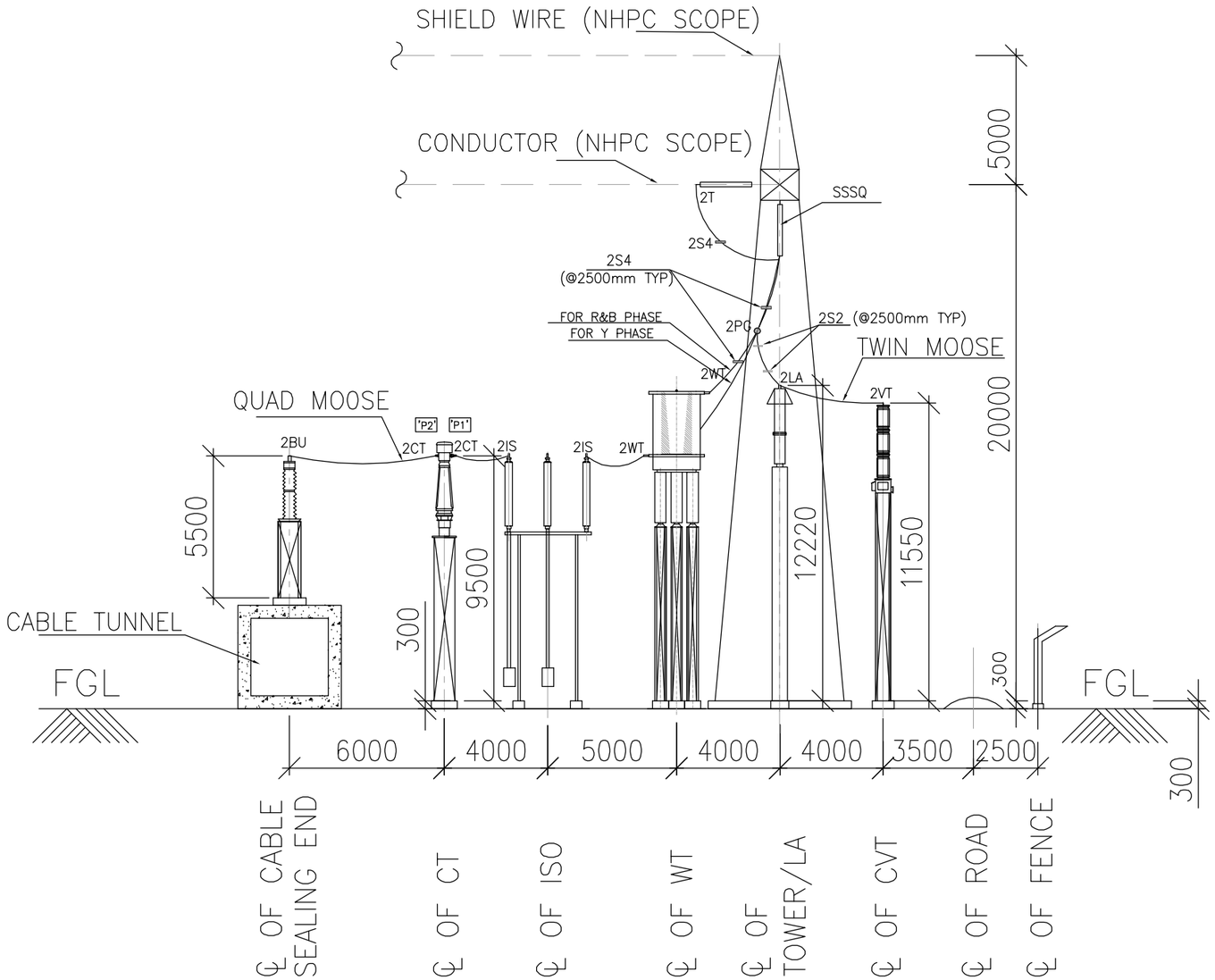

SECTION A–A

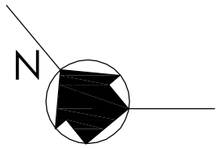

S.NO.	DESCRIPTION	UNIT	245kV
1.	PHASE TO PHASE	mm	2100
2.	PHASE TO EARTH	mm	2100
3.	MIN. DISTANCE OF THE LOWEST EARTH PART OF INSULATOR SUPPORTING LIVE CONDUCTORS FROM GROUND	mm	2550
4.	SECTION CLEARANCE	mm	5000
5.	HEIGHT OF CONDUCTOR CENTER LINE OF FIRST LEVEL FROM PLINTH LEVEL	mm	5500
6.	PLINTH HEIGHT	mm	300
7.	SUB CONDUCTOR SPACING	mm	250

SYSTEM PARAMETERS	245kV
LIGHTNING IMPULSE WITHSTAND VOLTAGE PHASE TO EARTH/ ACROSS OPEN SWITCHING DISTANCE AND BETWEEN PHASES (kVp)	1050/1200
MIN POWER FREQUENCY WITHSTAND VOLTAGE PHASE TO EARTH/ ACROSS OPEN SWITCHING DISTANCE AND BETWEEN PHASES (kVrms)	460/530
HIGHER SYSTEM VOLTAGE (kV)	245
CREEPAGE DISTANCE (mm/kV)	25
SHORT CIRCUIT CAPABILITY (kA FOR 1SEC)	40

LEGENDS:–

- BHEL SCOPE
- NOT IN BHEL SCOPE
- FENCE OF POTHEAD YARD

NOTE:–

1. ALL DIMENSIONS ARE IN MM, UNLESS OTHERWISE SPECIFIED.
2. 220KV POTHEAD YARD SHALL BE LOCATED AT EL 259.00M.
3. NHPC TO CHECK THE LOCATION OF DEAD END TRANSMISSION LINE TOWER.
4. NHPC TO ENSURE TO PROVIDE ACCESS TO 220KV POTHEAD YARD AT EL 259M.
5. GIS AND XLPE CABLE ROUTING SHALL BE SHOWN IN SEPARATE DRAWINGS.
6. WAVE TRAP (PEDESTAL) IS CONSIDERED IN R&B PHASES OF LINES.
7. PROTECTION AGAINST DIRECT LIGHTNING STROKE FOR POTHEAD YARD AREA SHALL BE BY TOWER SPIKE.
8. CIVIL WORKS IN NHPC SCOPE.
9. DETAILS OF CABLE TUNNEL TO BE PROVIDED BY NHPC.

NHPC DOC. NO. TSVI–PYD06TD005–B

ADDITIONAL INFORMATION
W.O. No. –

STATUS OF DRAWING
CONTRACT

DISTRIBUTION OF PRINTS

OWNER: LTHP LTD. (A wholly owned subsidiary of NHPC Ltd.)

CONSULTANT: एन एच पी सी लिमिटेड, भारत सरकार का उपक्रम, NHPC Limited (A Govt. of India Enterprise)

PROJECT: 4x125 MW TEESTA H.E.PROJECT (STAGE–VI) 220kV GIS, XLPE CABLES & POTHEAD YARD

बीएचईएल BHEL — भारत हेवी इलेक्ट्रिकल्स लिमिटेड, ट्रांसमिशन परियोजना विभाग, भोपाल
BHARAT HEAVY ELECTRICALS LTD. TRANSMISSION BUSINESS GROUP, NOIDA

	नाम/ NAME	हस्ता./ SIGN	दिनांक/DATE	रे.रि. की संख्या NO. OF VAR
बनाया DRN	SY	Sd/–	24.05.22	
जाँचा CKD	GV	Sd/–	24.05.22	
स्वीकृत APPD	VK	Sd/–	24.05.22	

REV.	DATE	ALTERED	REV.	DATE	ALTERED	REV.	DATE	ALTERED	REV.	DATE	ALTERED
		CHECKED			CHECKED			CHECKED			CHECKED
		APPROVED			APPROVED			APPROVED			APPROVED

REV.	DATE	ALTERED	
01	04.07.22	CHECKED	GV
		APPROVED	VK

DRAWING REVISED AS PER NHPC COMMENTS DTD. 21.06.22

विभाग DEPT TBEM; कोड CODE 422; अन. टल. माप की श्रेणी UNTOL.DIMS. GR.; अनुपात SCALE 1:400; भार कि.ग्रा. WEIGHT (K.G.); उसे. ड्राईंग का संदर्भ REF. TO ASSY. DRG.; मद क. ITEM NO.; मद संख्या NO. OF ITEM

शीर्षक/ TITLE: ERECTION KEY DIAGRAM

ड्राईंग क्र./DRAWING NO. TB–2–415–316–005; पुन./ REV 01

पृष्ठ क./ SHT. No. 03; पृष्ठों की संख्या/NO. OF SHT. 03

REF. DRG. NO. | SIGN AND DATE | INVENTORY NO.

A2

Project: LTHPL Teesta-VI HEP
Customer: LTHPL
Doc. Title - BILL OF QUANTITY FOR CLAMPS AND CONNECTORS INCLUDING STRING HARDWARE

ANNEXURE-BOQ
Rev. 00

(A) FOR CLAMPS AND CONNECTORS

S. NO.	EKD ID	Description	Fault Rating	Current Rating (in A)	Unit	Line-1	Line-2	Spare	Total
1	2BU	Connector for 220kV XLPE Cable to AIR-BUSHING suitable for Quad moose ACSR conductor for HT terminal with horizontal approach	40kA for 1s	2000A	Nos.	3	3	1	7
2	2CT	Connector for 220kV CT suitable for Quad moose ACSR conductor with horizontal approach	40kA for 1s	2000A	Nos.	6	6	1	13
3	2IS	Connector for 220kV Isolator, suitable for Quad moose ACSR conductor	40kA for 1s	2000A	Nos.	6	6	1	13
4	2WT	Connector for 220kV Wave Trap suitable for Quad moose ACSR conductor (universal approach)	40kA for 1s	2000A	Nos.	4	4	1	9
5	2PI	220kV Buspost insulator clamp suitable for Twin moose ACSR conductor (horizontal approach) through type with horizontal approach	40kA for 1s	2000A	Nos.	1	1	1	3
6	2VT	Connector for 220 kV CVT suitable for Twin moose ACSR conductor (universal approach) through type with horizontal approach	40kA for 1s	-	Nos.	3	3	1	7
7	2LA	Connector for 220 kV LA suitable for Twin moose ACSR conductor	40kA for 1s	-	Nos.	3	3	1	7
8	2PG	PG clamp suitable for Twin moose ACSR conductor to Single Moose ACSR conductor	40kA for 1s	-	Nos.	6	6	1	13
9	2T1	TEE Connector suitable for Single Moose to Single Moose conductor	40kA for 1s	-	Nos.	12	12	1	25
10	2S2	Spacers for Twin Moose ACSR with 250mm sub-conductor spacing, Rigid Type	40kA for 1s	2000A	Nos.	6	6	1	13
11	2S4	Spacers for Quad Moose ACSR with 250mm sub-conductor spacing, Rigid Type	40kA for 1s	2000A	Nos.	18	18	1	37
12	2CL	Cleat type clamps for 75 x 12mm G.S. flat for structure	-	-	Nos.	130	130	1	261

(B) FOR STRING INSULATOR HARDWARE

S. NO.	EKD ID	Description			Unit	Line-1	Line-2	Spare	Total
1	SSSQ	220 kV Single Suspension string insulator (120 kN) assembly with 1x15 nos antifog disc with all hardware accessories including grading Ring with through type suspension clamp set suitable for Quad Moose with 250 mm sub conductor spacing			Nos.	3	3	3	9

Notes:

1	Line side Conductor is Twin Moose ACSR.
2	The sub-conductor spacing for 220kV ACSR conductor is 250mm.
3	Fault rating for the system is 40kA for 1s.
4	Please refer Erection Key Diagram (Document No. TB-2-415-316-005) for details.
5	Quantity of Clamps and Connectors is tentative and may vary during execution.
6	ACSR Moose conductror (Overall diameter=31.77mm).
7	Shield Wire and associated clamps are not in BHEL scope. However, 2 nos. risers for earthing of shield wire shall be provided for each peak tower.
8	Supply and erection of Tension string insulator and associated hardware is not in BHEL scope.

FIRST ANGLE PROJECTION

ALL DIMENSIONS ARE IN mm

DRG. NO. TB-2-415-316-002

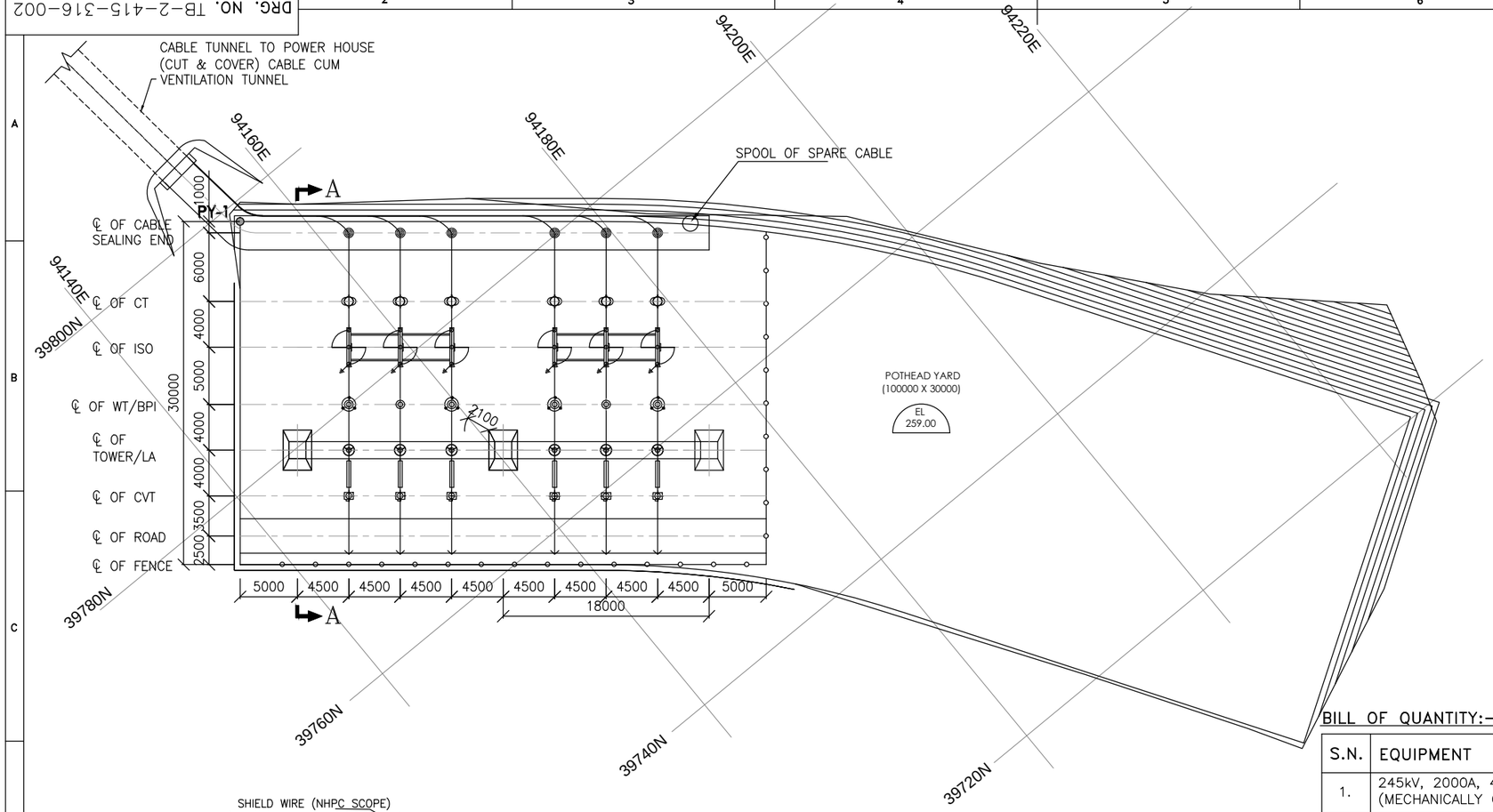

S.NO.	DESCRIPTION	UNIT	245kV
1.	PHASE TO PHASE	mm	2100
2.	PHASE TO EARTH	mm	2100
3.	MIN. DISTANCE OF THE LOWEST EARTH PART OF INSULATOR SUPPORTING LIVE CONDUCTORS FROM GROUND	mm	2550
4.	SECTION CLEARANCE	mm	5000
5.	HEIGHT OF CONDUCTOR CENTER LINE OF FIRST LEVEL FROM PLINTH LEVEL	mm	5500
6.	PLINTH HEIGHT	mm	300
7.	SUB CONDUCTOR SPACING	mm	250

R2

SYSTEM PARAMETERS	245kV
LIGHTNING IMPULSE WITHSTAND VOLTAGE PHASE TO EARTH/ ACROSS OPEN SWITCHING DISTANCE AND BETWEEN PHASES (kVp)	1050/1200
1 MIN POWER FREQUENCY WITHSTAND VOLTAGE PHASE TO EARTH/ ACROSS OPEN SWITCHING DISTANCE AND BETWEEN PHASES (kVrms)	460/530
HIGHER SYSTEM VOLTAGE (kV)	245
CREEPAGE DISTANCE (mm/kV)	25
SHORT CIRCUIT CAPABILITY (kA FOR 1SEC)	40

BILL OF QUANTITY:-

S.N.	EQUIPMENT	QTY.	SYMBOL
1.	245kV, 2000A, 40kA/1s, HDB ISOLATOR WITH 1 EARTH SWITCH (MECHANICALLY GANGED) (MOTOR AS WELL AS MANUAL) (3-Ph)	02	
2.	245kV, 2000A, 40kA/1s, CURRENT TRANSFORMER (1-Ph)	06	
3.	245kV, 4400pF, $\frac{245kV}{\sqrt{3}}/\frac{110V}{\sqrt{3}}/\frac{110V}{\sqrt{3}}/\frac{110V}{\sqrt{3}}$ CVT (1-Ph)	06	
4.	216kV SURGE ARRESTER (1-Ph)	06	
5.	245kV, 1mH, 2000A, 40kA/1s WAVE TRAP (GANTRY MOUNTED) (1-Ph)	04	
6.	245kV XLPE CABLE SEALING END (1-Ph)	06	
7.	220kV BUS POST INSULATORS (1-Ph)	02	
8.	220kV XLPE POWER CABLE (1-Ph)	1 LOT*	———

R2

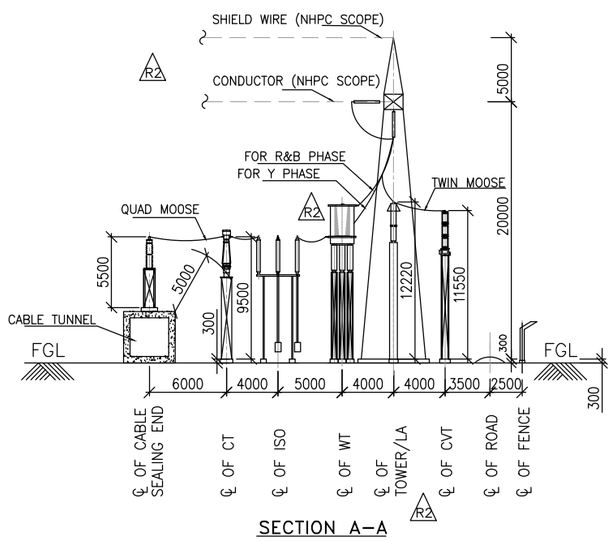

SECTION A-A

NOTE:-

1. ALL DIMENSIONS ARE IN MM, UNLESS OTHERWISE SPECIFIED.
2. 220KV POTHEAD YARD SHALL BE LOCATED AT EL 259.00M.
3. NHPC TO CHECK THE LOCATION OF DEAD END TRANSMISSION LINE TOWER.
4. NHPC TO ENSURE TO PROVIDE ACCESS TO 220KV POTHEAD YARD AT EL 259M.
5. GIS AND XLPE CABLE ROUTING SHALL BE SHOWN IN SEPARATE DRAWINGS.
6. WAVE TRAP (GANTRY MOUNTED) IS CONSIDERED IN R&B PHASES OF LINES.
7. PROTECTION AGAINST DIRECT LIGHTNING STROKE FOR POTHEAD YARD AREA SHALL BE BY SPIKE.
8. CIVIL WORKS IN NHPC SCOPE.
9. DETAILS OF CABLE TUNNEL TO BE PROVIDED BY NHPC.

LEGENDS:-

——————— BHEL SCOPE
— — — — — NOT IN BHEL SCOPE
———o———o——— FENCE OF POTHEAD YARD

R2

NHPC DOC. NO.

TSVI-PYD06TD002-C

ADDITIONAL INFORMATION

W.O. No. –

STATUS OF DRAWING

CONTRACT

DISTRIBUTION OF PRINTS

OWNER: LTHP LTD. (A wholly owned subsidiary of NHPC Ltd.) — Lower Teesta Hydro Power Limited (A wholly owned Subsidiary of NHPC Ltd.)

CONSULTANT: एन एच पी सी लिमिटेड, भारत सरकार का उपक्रम, NHPC Limited (A Govt. of India Enterprise)

PROJECT: 4x125 MW TEESTA H.E.PROJECT (STAGE-VI) 220kV GIS, XLPE CABLES & POTHEAD YARD

भारत हेवी इलेक्ट्रिकल्स लिमिटेड, ट्रांसमिशन परियोजना विभाग, भोपाल
BHARAT HEAVY ELECTRICALS LTD. TRANSMISSION BUSINESS GROUP, NOIDA

	नाम/ NAME	हस्ता./ SIGN	दिनांक/DATE	ये.र. की संख्या NO. OF VAR
बनाया DRN	PK	Sd/-	16.02.20	
जाँचा CKD	MVK	Sd/-	16.02.20	
स्वीकृत APPD	SKS	Sd/-	16.02.20	

REV.	DATE	ALTERED / CHECKED / APPROVED	REV.	DATE	ALTERED / CHECKED / APPROVED	REV.	DATE	ALTERED / CHECKED / APPROVED	REV.	DATE	ALTERED / CHECKED / APPROVED	REV.	DATE	ALTERED / CHECKED / APPROVED
									02	21.12.21	GV / GV / VK	01	12.04.21	MVK / MVK / SKS
											TOWER/GANTRY,WT, LA, CVT LOCATION CHANGED. LINE ORIENTATION CHANGED BY 180 DEGREE AS PER NHPC COMMENT.			REVISED AS PER NHPC COMMENTS.

विभाग DEPT TBEM | कोड CODE 422 | उन. टा. नाप की श्रेणी UNTOL.DIMS. GR. | उलुपात SCALE 1:400 | भार कि.ग्रा. WEIGHT (K.G.) | उसे. ड्रॉइंग का संदर्भ REF. TO ASSY. DRG. | मद क्र. ITEM NO. | मद संख्या NO. OF ITEM

शीर्षक/ TITLE: LAYOUT PLAN & SECTION ELEVATION OF POT HEAD YARD (245kV)

ड्रॉइंग क्र./DRAWING NO. TB-2-415-316-002 | पुन./ REV 02

पृष्ठ क्र./SHT. No. 1 | पृष्ठों की संख्या/NO. OF SHT. 1

REF. DRG. NO. | SIGN AND DATE | INVENTORY NO.

A2

BHARAT HEAVY ELECTRICALS LIMITED
TRANSMISSION PROJECTS ENGINEERING MANAGEMENT
NEW DELHI

DOCUMENT No.	TB xxx 618 002a	Rev 04	Prepared	Checked	Appd
TYPE OF DOC.	TECHNICAL SPECFICATION	NAME	BVG	PLK	RMS
TITLE	G I HARDWARES	SIGN	-SD-	-SD-	-SD-
		DATE			
		GROUP	TBEM		
		W.O. No			
CUSTOMER/ CONSULTANT					
PROJECT					

COPYRIGHT & CONFIDENTIAL
The information in this document is the property of BHARAT HEAVY ELECTRICALS LIMITED
This must not be used directly or indirectly in anyway detrimental to the interest of the company.

Contents:

Section No.	Description	No of Pages
SECTION-1	SCOPE, SPECIFIC TECHNICAL REQUIREMENTS and QUANTITIES	01
SECTION-2	STANDARD SPECIFICATION	03
SECTION-3	PROJECT DETAILS AND GENERAL SPECIFICATION	01
SECTION-4	GUARANTEED TECHNICAL PARTICULARS (Not Applicable)	....
SECTION-5	MANUFACTURING QUALITY PLAN (Not Applicable)	....
SECTION-6	CHECK LIST	01

Rev	Date	Altered	Checked	Approved	
04	18.11.10	BVG	PLK	RMS	Unit wt of hardware added
02	13.4.06.	BVG	PLK	RMS	Eqpt mounting hardwares added.

Distribution				
To				
Copies				

SECTION - 1

SCOPE, SPECIFIC TECHNICAL REQUIREMENTS & QUANTITIES

1.1 SCOPE

The scope of this specification is to specify all details required by a supplier for supply of galvanized hardwares for projects being executed by BHEL on turnkey basis for NTPC, PGCIL, SEBs and other Customers.

1.2 SPECIFIC TECHNICAL REQUIREMENTS

The specific technical requirements shall be as per Standard Technical Specification (Refer Section 2).

1.3 QUANTITIES

The quantities shall be as per attached BOQ.

SECTION - 2

2.0 GENERAL

This section covers the standard technical specification for GI Hardwares.

2.1 BOLTS:

M16 bolts shall be used in all types of structures except equipment mounting/ earthing bolts which shall be as per equipment requirement.

All bolts for member connections in towers, beams & equipment support structures shall conform to IS: 12427 - 2001 and for step bolts shall conform to IS: 10238 – 1982.

The mechanical properties shall conform to property class 5.6 of IS:1367 (part 3) - 1991.

All bolt heads shall have hexagonal shape, the heads being forged out of the solid material truly concentric and square with the shank, which must be perfectly straight.

Fully threaded bolts should not be used.

All bolts shall be threaded with metric standard thread to take the full depth of the nut and permit firm grip of the member.

All bolts shall be hot dip galvanized as per IS: 1367 (Part 13) – 1983.

2.2 NUTS:

All nuts shall conform to IS: 1363 (Part 3) –1992.

The mechanical properties shall conform to property class 5 of IS:1367 (part 6) – 1980.

The nuts shall be capable of being worked with fingers along the entire threaded portion of the bolt with a neat fit capable of developing the full strength of the bolt.

All nuts shall be hot dip galvanized as per IS: 1367 (Part 13) – 1983.

2.3 PLAIN WASHERS:

All plain washers shall be punched washers, A type conforming to IS: 2016-1967.

These shall be hot dip galvanized as per IS: 4759 – 1984.

2.4 SPRING WASHER:

All spring washers shall be of spring steel, positive lock type and conforming to type B of IS: 3063-1972. The thickness of spring washer shall be as specified under:

Bolt Diameter	Thickness of Spring washers
16 mm	3.5 mm
12 mm	2.5 mm

These shall be electro-galvanized as per IS: 1573 – 1986.

2.5 UNIT WEIGHT OF BOLTS I/C NUT, PLAIN AND SPRING WASHERS:

For purpose of payment, following unit weights as indicated below shall be considered.

A.) STANDARD BOLTS I/C ONE NUT UNIT WEIGHTS

S. NO.	TYPE	SIZE OF BOLTS	TOTAL WT (KG)
1	M16	16 ϕ X 35 LG	**0.117**
2	M16	16 ϕ X 40 LG	**0.125**
3	M16	16 ϕ X 45 LG	**0.133**
4	M16	16 ϕ X 50 LG	**0.141**
5	M16	16 ϕ X 55 LG	**0.149**
6	M16	16 ϕ X 60 LG	**0.157**
7	M16	16 ϕ X 65 LG	**0.164**
8	M16	16 ϕ X 70 LG	**0.172**
9	M16	16 ϕ X 75 LG	**0.180**
10	M16	16 ϕ X 80 LG	**0.188**
11	M16	16 ϕ X 85 LG	**0.196**
12	M16	16 ϕ X 90 LG	**0.204**
13	M16	16 ϕ X 95 LG	**0.212**
14	M16	16 ϕ X 100 LG	**0.220**
15	M12	12 ϕ X 35 LG	**0.0620**
16	M12	12 ϕ X 40 LG	**0.0664**
17	M12	12 ϕ X 45 LG	**0.0708**
18	M12	12 ϕ X 50 LG	**0.0753**
19	M12	12 ϕ X 55 LG	**0.0797**
20	M12	12 ϕ X 60 LG	**0.0842**

B.) SPRING WASHER

S. NO.	TYPE	TOTAL WT (KG)
1	3.5mm thk (M16 bolt)	**0.00891**
2	2.5mm thk (M12 bolt)	**0.00382**

C.) For supplies of bolts i/c nuts, plain washers and spring washer other than those listed above, payment shall be made based on unit weights worked out considering theoretical dimensions & density of steel as 7850kg/cum.

FIRST ANGLE PROJECTION

ALL DIMENSIONS ARE IN mm

DRG. NO. TB-DG-415-316-402(4)

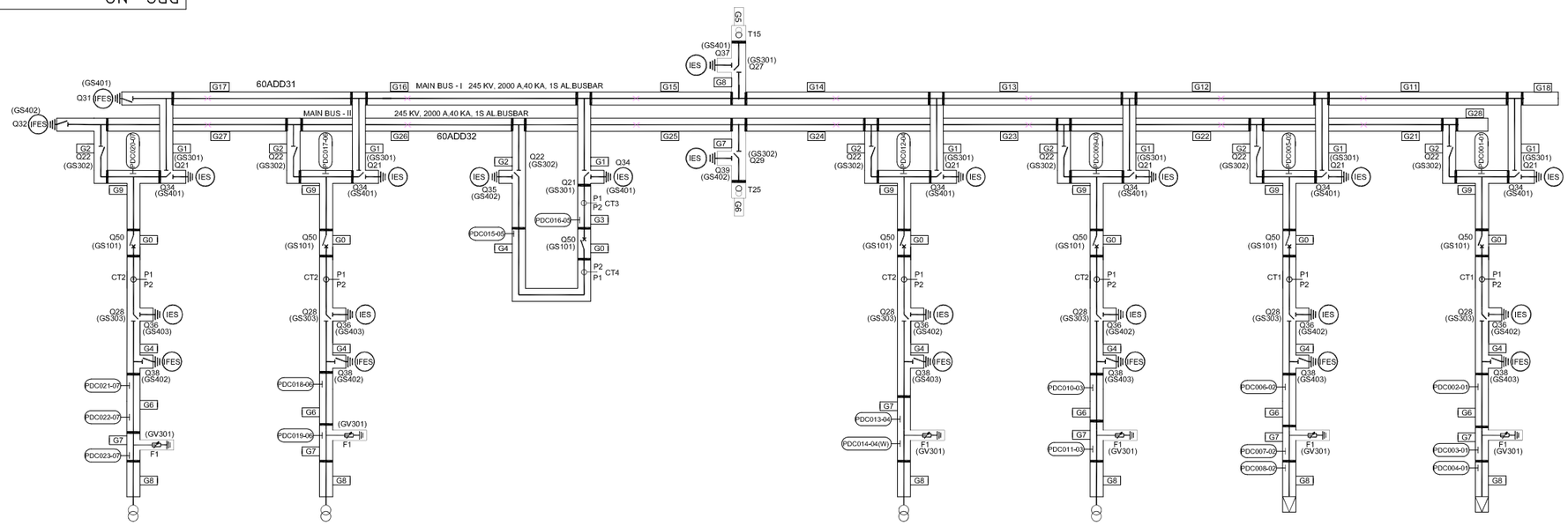

Notes:

1. All Gas compartment are equipped with Density switch, Bursting Disc, Filling Value, Static Filter (Moisture Absorber).
2. Visual indications are provided for isolator and earth switch in mechanism
3. Open Cones between CB and common point and also between Bays are provided to ensure service continuity during maintenance repair and extension
4. Gas handling equipment can handle 250kg of SF6, which is sufficient for any gas compartment (Max weight of gas In any compartment : 164kg)
5. ME4 Mechanism Box 14 Nos will be supplied as loose Components.
6. Baywatch Communication through RS485 Modbus to SCADA
7. Factory Assembled BAY weight 3500Kgs & heaviest single components weight ie. CB with mechanism 285Kgs

CURRENT TRANSFORMER
According to IEC 61869-2

Ith =40kA, 1s Idyn =100kA Icth =120%

CT No	Bay Name	Quantity (1 phase)	BHEL Ref	GE Ref	Core Identification	Ratio (A)	Accuracy class	Output (VA)	ISF	Min. KPV (Vk)	RCT (Ω) at 75deg C	Max. Exciting Current (mA) at Vk/2
CT-1	LINE BAY (BAY 01,02)	P1 CB 6 Nos	GT301-R GT302-Y GT303-B	F1	Core #1	2000-1000-500 / 1A	PS	-	-	2000-1000 -500	10-5-2.5	30-60-120
			GT311-R GT312-Y GT313-B	F1	Core # 2	2000-1000-500 / 1A	PS	-	-	2000-1000 -500	10-5-2.5	30-60-120
			GT321-R GT322-Y GT323-B	N2	Core # 3	2000-1000-500 / 1A	0.2S	20	<5	2000-1000 -500	-	-
			GT331-R GT332-Y GT333-B	F1	Core # 4	2000-1000-500 / 1A	PS	-	-	2000-1000 -500	10-5-2.5	30-60-120
			GT341-R GT342-Y GT343-B	F1	Core # 5	2000-1000-500 / 1A	PS	-	-	2000-1000 -500	10-5-2.5	30-60-120
		P2	GT351-R GT352-Y GT353-B	F1	Core # 6	2000-1000-500 / 1A	PS	-	-	2000-1000 -500	10-5-2.5	30-60-120
			GT361-R GT362-Y GT363-B	F1	Core # 7	2000-1000-500 / 1A	PS	-	-	2000-1000 -500	10-5-2.5	30-60-120
CT-2	GT BAY (BAY 03 ,04,06,07)	CB P1 12 Nos	GT301-R GT302-Y GT303-B	F1	Core #1	2000-1000-500 / 1A	PS	-	-	2000-1000 -500	10-5-2.5	30-60-120
			GT311-R GT312-Y GT313-B	F1	Core # 2	2000-1000-500 / 1A	PS	-	-	2000-1000 -500	10-5-2.5	30-60-120
			GT321-R GT322-Y GT323-B	N2	Core # 3	2000-1000-500 / 1A	0.2S	20	<5	2000-1000 -500	-	-
			GT331-R GT332-Y GT333-B	F1	Core # 4	2000-1000-500 / 1A	PS	-	-	2000-1000 -500	10-5-2.5	30-60-120
			GT341-R GT342-Y GT343-B	F1	Core # 5	2000-1000-500 / 1A	PS	-	-	2000-1000 -500	10-5-2.5	30-60-120
		P2	GT351-R GT352-Y GT353-B	F1	Core # 6	2000-1000-500 / 1A	PS	-	-	2000-1000 -500	10-5-2.5	30-60-120
CT-3	BUS COUPLER	P1 3 Nos	GT301-R GT302-Y GT303-B	F3	Core # 1	2000-1000-500 / 1A	5P20	10	-	-	15-10-5	-
			GT311-R GT312-Y GT313-B	F1	Core # 2	2000-1000-500 / 1A	PS	-	-	2000-1000 -500	10-5-2.5	30-60-120
		CB P2	GT321-R GT322-Y GT323-B	F1	Core # 3	2000-1000-500 / 1A	PS	-	-	2000-1000 -500	10-5-2.5	30-60-120
CT-4	BUS COUPLER	P1 3 Nos	GT351-R GT352-Y GT353-B	N2	Core # 1	2000-1000-500 / 1A	0.2S	20	<5	2000-1000 -500	-	-
			GT341-R GT342-Y GT343-B	F1	Core # 2	2000-1000-500 / 1A	PS	-	-	2000-1000 -500	10-5-2.5	30-60-120
		CB P2	GT331-R GT332-Y GT333-B	F1	Core # 3	2000-1000-500 / 1A	PS	-	-	2000-1000 -500	10-5-2.5	30-60-120

All values are highest tap ratio only

SF6 DENSITY MONITORING DETAILS

CIRCUIT BREAKER	OTHER COMPARTMENTS
Normal : 6.3 Bars Gas Re-fill level (alarm) : 5.8 Bars (Stage - I) Block/Lockout : 5.5 Bars (Stage - II)	Normal : 6.3 Bars Gas Re-fill level (alarm) : 5.8 Bars (Stage - I) Block/Lockout : 5.5 Bars (Stage - II)

GIS COLOR:
INDOOR :RAL 7032
OUTDOOR :RAL 7032

APPLICABLE STANDARDS

High Voltage Alternating Current Circuit Breaker	IEC 62271-100
High Voltage Alternating Current Disconnector & Earthing Switch	IEC 62271-102
Gas Insulated Metal Enclosed Switchgear	IEC 62271-203
HV Bushing	IEC 60137
Current Transformers	IEC 61869-2
Voltage Transformers	IEC 61869-3
SF6 Gas	IEC 60376
Pressure Vessel	CENELEC

SYSTEM PARAMETER

RATED CURRENT BUSBAR	Ir	2000A
RATED CURRENT BUSCOUPLER	Ir	2000A
RATED CURRENT LINE BAYS & GEN BAY	Ir	2000A
RATED FREQUENCY	Fr	50Hz
SHORT-TIME WITHSTAND CURRENT	Ik	40kA
DURATION	tk	1s
RATED VOLTAGE	Ur	220 kV rms
POWER FREQUENCY WITHSTAND VOLTAGE	Ud	460 kV rms
LIGHTING IMPULSE WITHSTAND VOLTAGE	Up	1050 kVp
PEAK WITHSTAND CURRENT	Ip	100kA
INTERNAL ARC WITHSTAND TIME		300 ms
MAXIMUM GAS LOSS PER YEAR		< 0.5 %
CONTROL VOLTAGE	Vdc	220V DC
LIGHTING AND SPACE HEATING	Vac	240V AC

SURGE ARRESTER
According to IEC 60099-4

SA NO	Quantity (1 phase)	Ur	Uc	In	Class ID	TYPE
F1	18 Nos	216 kV	173 kV	10 kA	4	PSB198F

VOLTAGE TRANSFORMER DATA (EMVT)
According to IEC 61869-3

VT NO	Quantity (1 phase)	Core	Ratio (kV)	Output (VA)	Class	Thermal Burden
T15 T25	6 Nos	VT-1	220/√3 / 0.11/√3	100	0.2	500
		VT-2	220/√3 / 0.11/√3	50	3P	500

LEGEND

(Q50) ...	INTERNAL DESIGNATION CUSTOMER'S DESIGNATION	RATING	UNITS	PH	QTY
	CIRCUIT-BREAKER	245 KV ,2000A , 40KAFOR 1 SEC	SET	1	21
	DISCONNECTOR	245 KV , 2000A , 40KAFOR 1 SEC	SET	1	18
	BUSBAR (3150A)	245 KV , 2000A , 40KAFOR 1 SEC	SET	1	-
	CURRENT TRANSFORMER	REFER TABLE			
	VOLTAGE TRANSFORMER	REFER TABLE	SET	1	21
IES	COMBINED DISCONNECTOR & INSULATED EARTING SWITCH (3150A)	245 KV , 2000A , 40KAFOR 1 SEC	SET	1	48
FES	INSULATED FAST ACTING EARTHING SWITCH	245 KV , 40KAFOR 1 SEC	SET	1	24
IES	INSULATED EARTHING SWITCH	245 KV , 40KAFOR 1 SEC	-	-	-
	TELESCOPIC ENCLOSURE	245 KV , 2000A , 40KAFOR 1 SEC	SET	1	42
BAY XX	BAY NUMBERING	-	-	-	-
Gx	GAS PARTITIONING	-	-	-	-
PDC	PARTIAL DISCHARGE COUPLER	-	-	-	23
	SF6 CABLE BOX	245 KV , 2000A , 40KAFOR 1 SEC	SET	1	6
	SF6-OIL BUSHING (TRAFO CONNECTION)	245 KV , 2000A , 40KAFOR 1 SEC	SET	1	12
	SURGE ARRESTOR	REFER TABLE	SET	1	18

NHPC DOC. NO.
TSVI-GIS06TD004-D

ADDITIONAL INFORMATION
W.O. No. –

STATUS OF DRAWING
CONTRACT

DISTRIBUTION OF PRINTS

OWNER **LTHP LTD.** (A wholly owned subsidiary of NHPC Ltd.)

CONSULTANT **NHPC Limited** (A Govt. of India Enterprise)

PROJECT 4x125 MW TEESTA H.E.PROJECT (STAGE-VI)

VENDOR GE T&D INDIA LTD.

LOI REF BHEL-TBG/MM/61Q2200160/LTHPL TEESTA(NHPC)/GE

BHARAT HEAVY ELECTRICALS LTD.
TRANSMISSION BUSINESS GROUP, NOIDA

	NAME	SIGN	DATE
DRN	NSK		14.07.22
CKD	RS		14.07.22
APPD	AN		15.07.22

NO. OF VAR

DEPT TBEM
CODE 422
UNTOL.DIMS. GR.
SCALE 1:400
WEIGHT (K.G.)
REF. TO ASSY. DRG.
ITEM NO.
NO. OF ITEM

TITLE
220kV GIS GAS SLD

NHPC DWG NO. TSVI-GIS06TD004-D
BHEL DWG NO. TB-DG-415-316-402(4)
GE DWG NO. GD06A000663
REV 04
SHT. No. 1
NO. OF SHT. 1

REFERENCE DWG NO
DRG.NO. TSVI-PYD06TD001-B TB-3-415-510-001 REV. 01

REV.	DATE	ALTERED / CHECKED / APPROVED
04	22.11.22	VIJAY / SATHISH / SENTHIL
03	07.10.22	VIJAY / SATHISH / SENTHIL
02	05.10.22	VIJAY / SATHISH / SENTHIL
01	06.09.22	VIJAY / SATHISH / SENTHIL

REF. DRG. NO.
SIGN AND DATE
INVENTORY NO.

A2

ALL DIMENSIONS ARE IN mm.

REV.	DATE	ALTERED	REV.	DATE	ALTERED	REV.	DATE	ALTERED
		CHECKED			CHECKED			CHECKED
		APPROVED			APPROVED			APPROVED

THE INFORMATION ON THIS DOCUMENT IS THE PROPERTY OF BHARAT HEAVY ELECTRICALS LIMITED.
IT MUST NOT BE USED DIRECTLY OR INDIRECTLY IN ANY WAY DETRIMENTAL TO THE INTEREST OF THE COMPANY.

LEGEND

→ CONNECTION TO GROUND MAT THROUGH RISER.

SHEET NO.	DESCRIPTION
01.	TITLE
1A.	NOTES
02.	220kV, POST INSULATOR (SOLID CORE TYPE)
03.	220kV CAPACITIVE VOLTAGE TRANSFORMER
04.	220kV WAVE TRAP
05.	220kV HORIZONTAL DOUBLE BREAK ISOLATOR (TYPICAL) WITH ONE EARTHSWITCH
06.	AUXILIARY EARTH MAT FOR ISOLATOR MAIN MECH.,E/S MECH. BOX
07.	CONTROL AND RELAY PANELS
08.	TOWER WITH PEAK
09.	CABLE HANGER
10.	ROD EARTH ELECTRODE WITHOUT TEST PIT
11.	ROD EARTH ELECTRODE WITH TEST PIT
12.	TYPICAL ARRANGEMENT OF BOLTED JOINTS
13.	TYPICAL ARRANGEMENT OF RISER
14.	WELDING DETAILS
15.	WELDING DETAILS

REFRENCE DRAWING

DWG. NO.	TITLE

ADDITIONAL INFORMATION	PROJECT		
STATUS OF DRAWING	CUSTOMER		
DISTRIBUTION OF PRINTS			

	NAME	SIGN	DATE	NO. OF VAR
DRN	GV			
CKD	GV			
APPD	VK			

CONTRACTOR

BHARAT HEAVY ELECTRICALS LTD.
TRANSMISSION BUSINESS GROUP

SUB-SUPPLIER/VENDOR

ISSUED BY DEPT TBEM	UNTOL.DIMS. GR.	ANGLE	SCALE	WEIGHT (KG)	REF. TO ASSY. DRG.	ITEM NO.	NO. OF ITEM
DEPT. CODE 316			NTS				

TITLE

EQUIPMENT EARTHING DETAILS

DRAWING NO. REV. 00

SHT. No. 01 NO. OF SHT. 16

COMPUTER NO.
REF. DRG. NO.
SIGN. & DATE
INVENTORY NO.

GENERAL NOTES:

1. EARTH STRIP CLEATED TO LATTICE TYPE STRUCTURE AT AN INTERVAL OF 750mm.
2. ALL ELECTRICAL EQUIPMENTS SHALL BE EARTHED BY TWO SEPARATE AND DISTINCT EARTH CONNECTIONS AND SHALL BE CONNECTED TO DIFFERENT CONDUCTORS OF EARTHING GRID.
3. THE MAIN GROUND GRID SHALL BE BURIED IN EARTH AT A MINIMUM DEPTH OF 600 MM BELOW GROUND LEVEL.
4. THE GROUND GRID CONDUCTOR BELOW GROUND LEVEL SHALL BE OF 2X75X12 GI FLAT. GROUND ELECTRODE SHALL BE 40MM ø X 3000 MM LONG MILD STEEL ROD, DRIVEN INTO THE GROUND AND CONNECTED TO THE GROUND GRID CONDUCTOR.
5. RISER/PIGTAIL FROM THE GROUND GRID SHALL BE 75X12 GI FLAT. AND SHALL PROJECT 300 MM ABOVE FINISHED GROUND/CONCRETE FLOOR LEVEL.
6. ALL GROUND CONNECTIONS BELOW GROUND SHALL BE MADE BY ELECTRIC ARC WELDING WITH **LOW HYDROGEN CONTENT ELECTRODE**. BENDING OF THE CONDUCTOR WHERE NECESSARY SHALL BE DONE BY GAS HEATING.
7. GROUND CONDUCTOR CONNECTIONS ABOVE GROUND SHALL BE GENERALLY MADE BY ELECTRIC ARC WELDING. THE CONNECTION SHALL BE COATED WITH COLD GALVANISING/WEATHER RESISTANT PAINTS.
8. BOLTED CONNECTION SHALL BE MADE ONLY FOR GROUNDING OF EQUIPMENT/ DEVICES AND SOME REMOVABLE STRUCTURES. THE CONTACT SURFACES SHALL BE THOROUGHLY CLEANED BEFORE CONNECTION TO ENSURE GOOD ELECTRICAL CONTACT.
9. 36MMøX3000MM LONG MILD STEEL GROUND ROD ELECTRODES SHALL BE PROVIDED AT CONNECTIONS WITH LIGHTNING ARRESTERS, CVT NEUTRALS AND SHIELD WIRE TOWER.
10. THE GROUNDING INSTALLATION WORK SHALL CONFORM TO THE REQUIREMENTS OF THE INDIAN ELECTRICITY RULES AND CODE OF PRACTICE FOR EARTHING (IS:3043) AS AMENDED UP-TO-DATE IN INDIA.
11. GI FLAT RISERS SHOULD BE BROUGHT CLOSE TO EQUIPMENTS FOUNDATION.
12. EARTH WIRE DOWN CONDUCTOR SHALL BE CLEATED AT AN INTERVAL OF 2000MM ALONG WITH STRUCTURE.
13. FOR WELDING DETAILS REFER SHEET NO. 14 & 15.

बीएचईएल BHEL	EQUIPMENT EARTHING DETAILS NOTES	
COMPU. DRG. REF.	DRG. No. TB-4-398-316-016	SHEET No. 1A

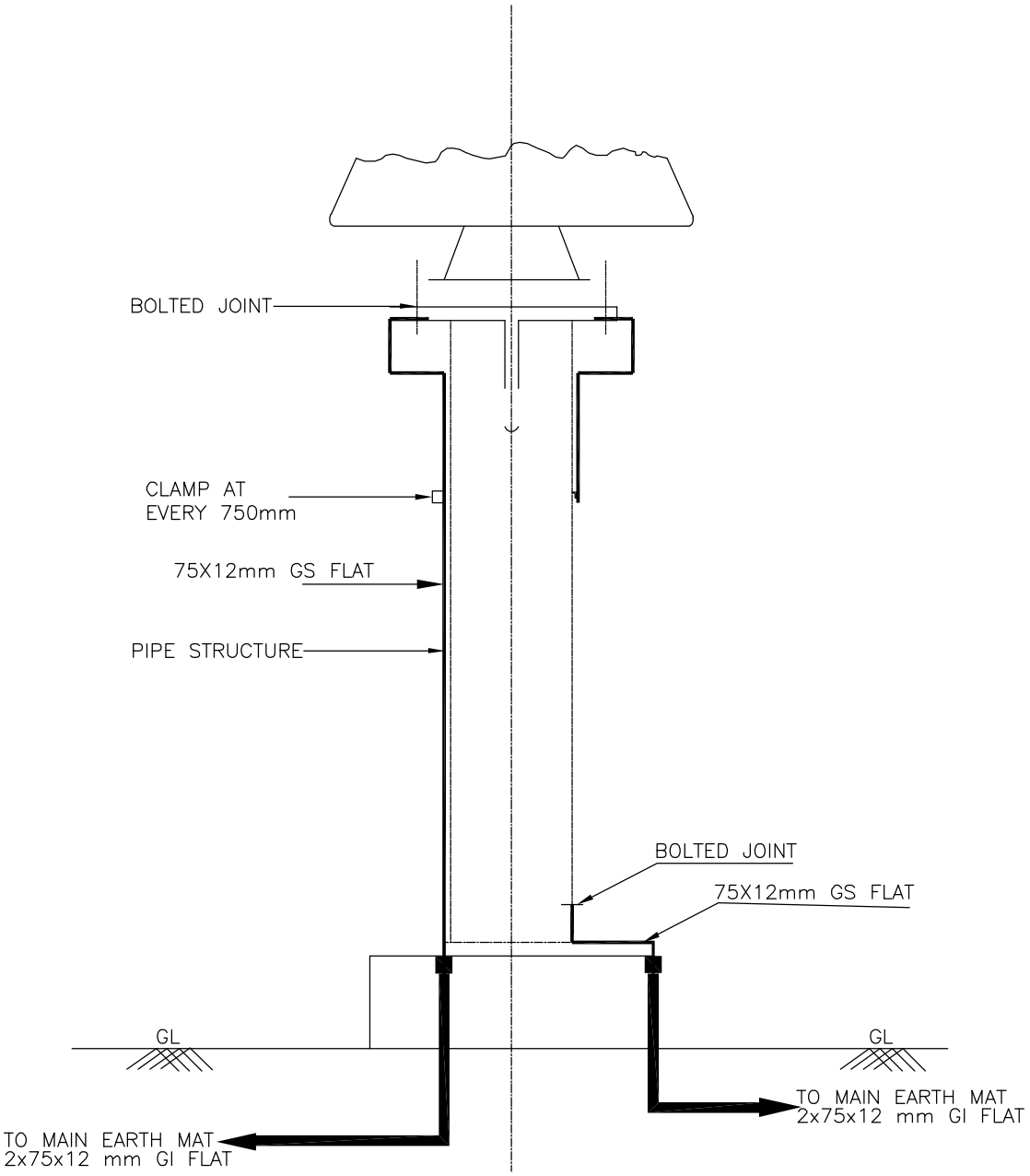

NOS.OF RISERS = 2 NOS.

बीएचईएल BHEL	EQUIPMENT EARTHING DETAILS 220kV, AIR BISHING / POST INSULATOR (SOLID CORE TYPE)	
COMPU. DRG. REF.	DRG. No. TB-4-398-316-016	SHEET No. 02

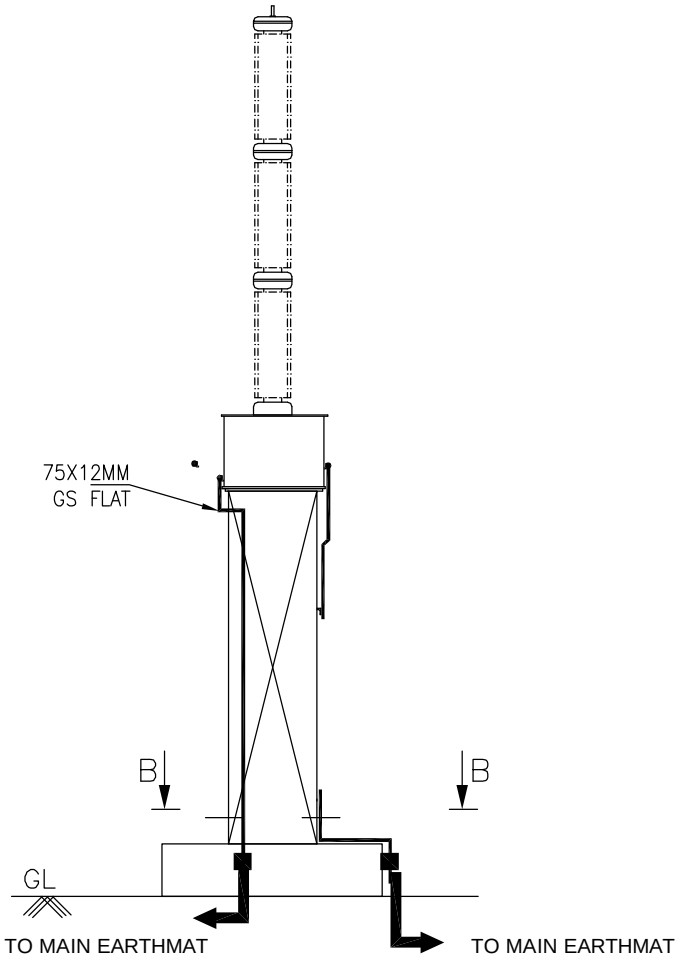

VIEW A–A

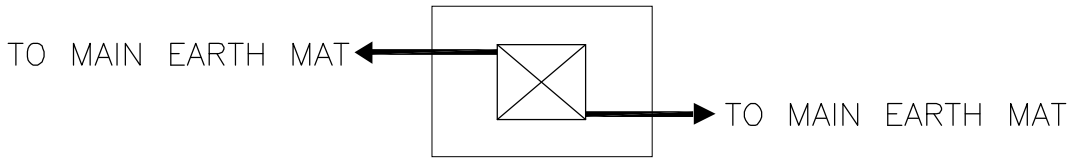

VIEW B–B

NOS.OF RISERS
= 2 NOS. PER PHASE

बीएचईएल BHEL	EQUIPMENT EARTHING DETAILS 220kV CAPACITIVE VOLTAGE TRANSFORMER	
COMPU. DRG. REF.	DRG. No. TB–4–398–316–016	SHEET No. 03

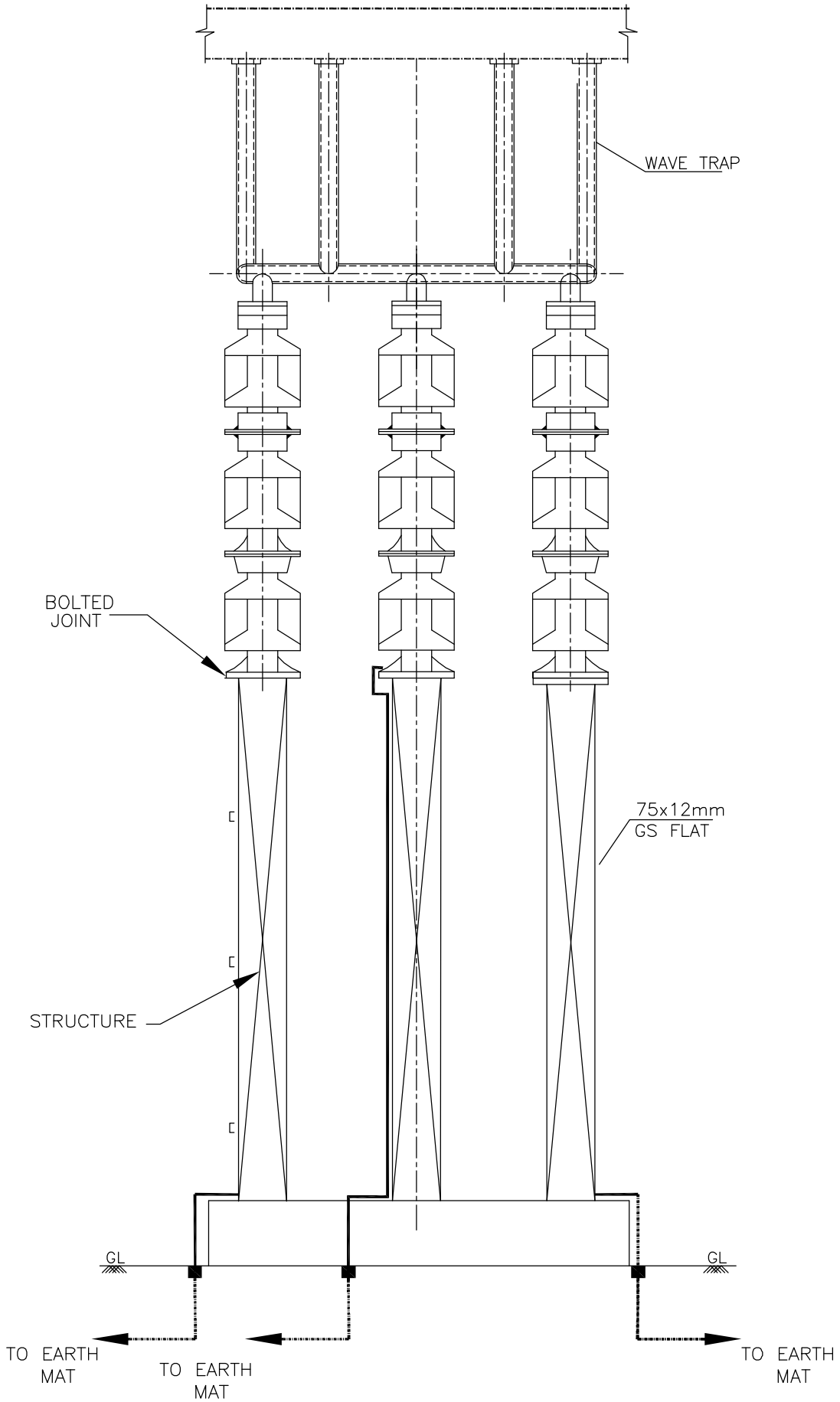

RISERS PER 1-PH WT= 3 NOS.

बीएचईएल BHEL

EQUIPMENT EARTHING DETAILS

220kV WAVE TRAP

COMPU. DRG. REF.	DRG. No.	SHEET No.
	TB-4-398-316-016	04

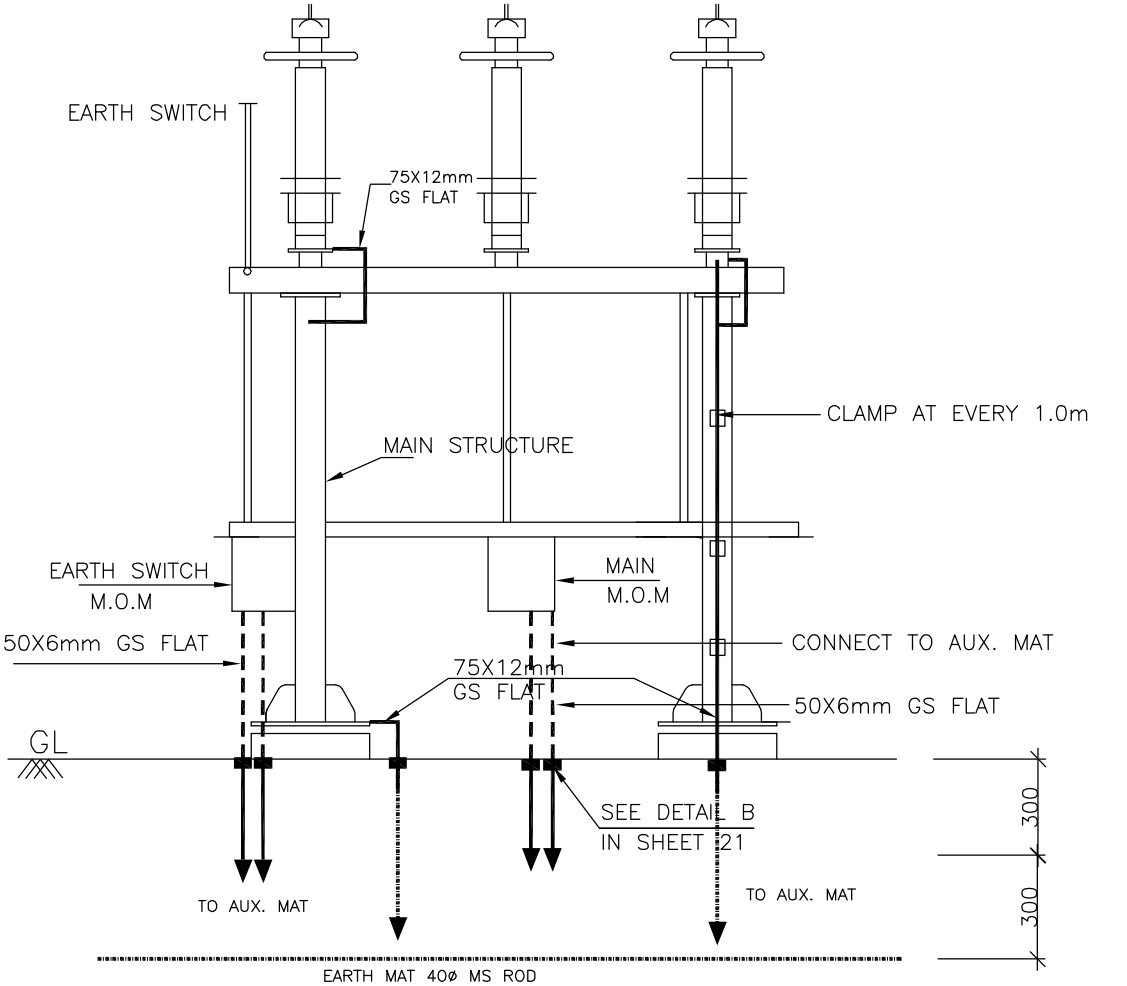

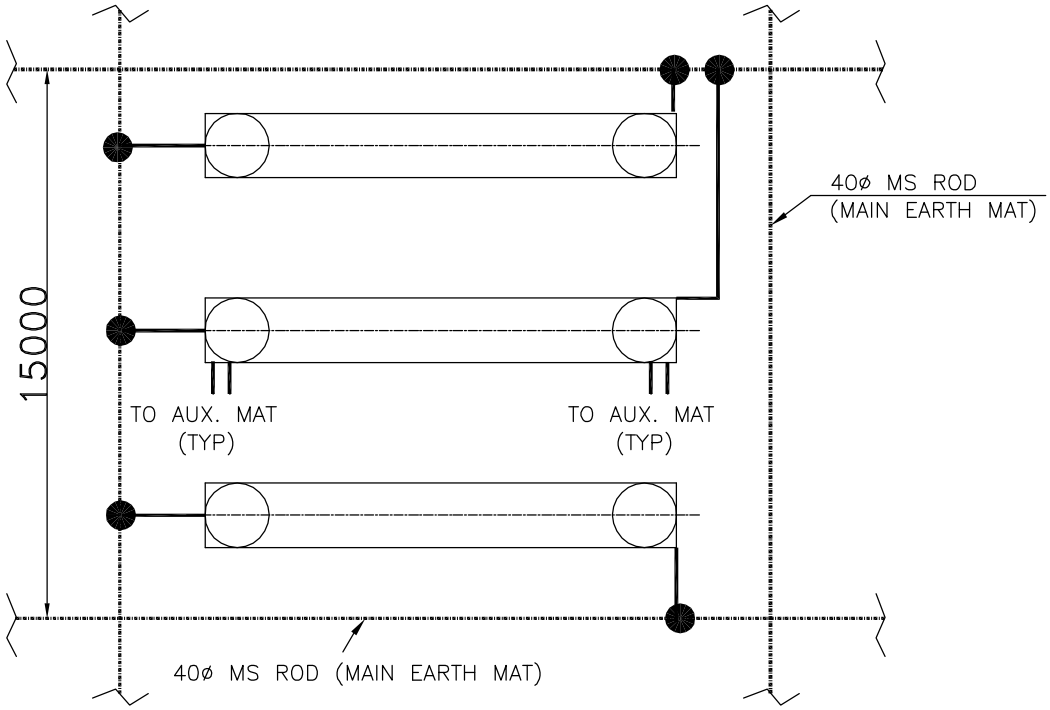

NOTES:

1. NO. OF RISER FOR EQUIPMENT = 2 Nos./PHASE
2. NO. OF RISER FOR MECHANISM BOX = 2 Nos./BOX
3. NO. OF AUXILIARY MAT = 1 No./BOX

बीएचईएल BHEL	EQUIPMENT EARTHING DETAILS 220kV HORIZONTAL DOUBLE BREAK ISOLATOR (TYPICAL) WITH ONE EARTHSWITCH	
COMPU. DRG. REF.	DRG. No. TB-4-398-316-016	SHEET No. 05

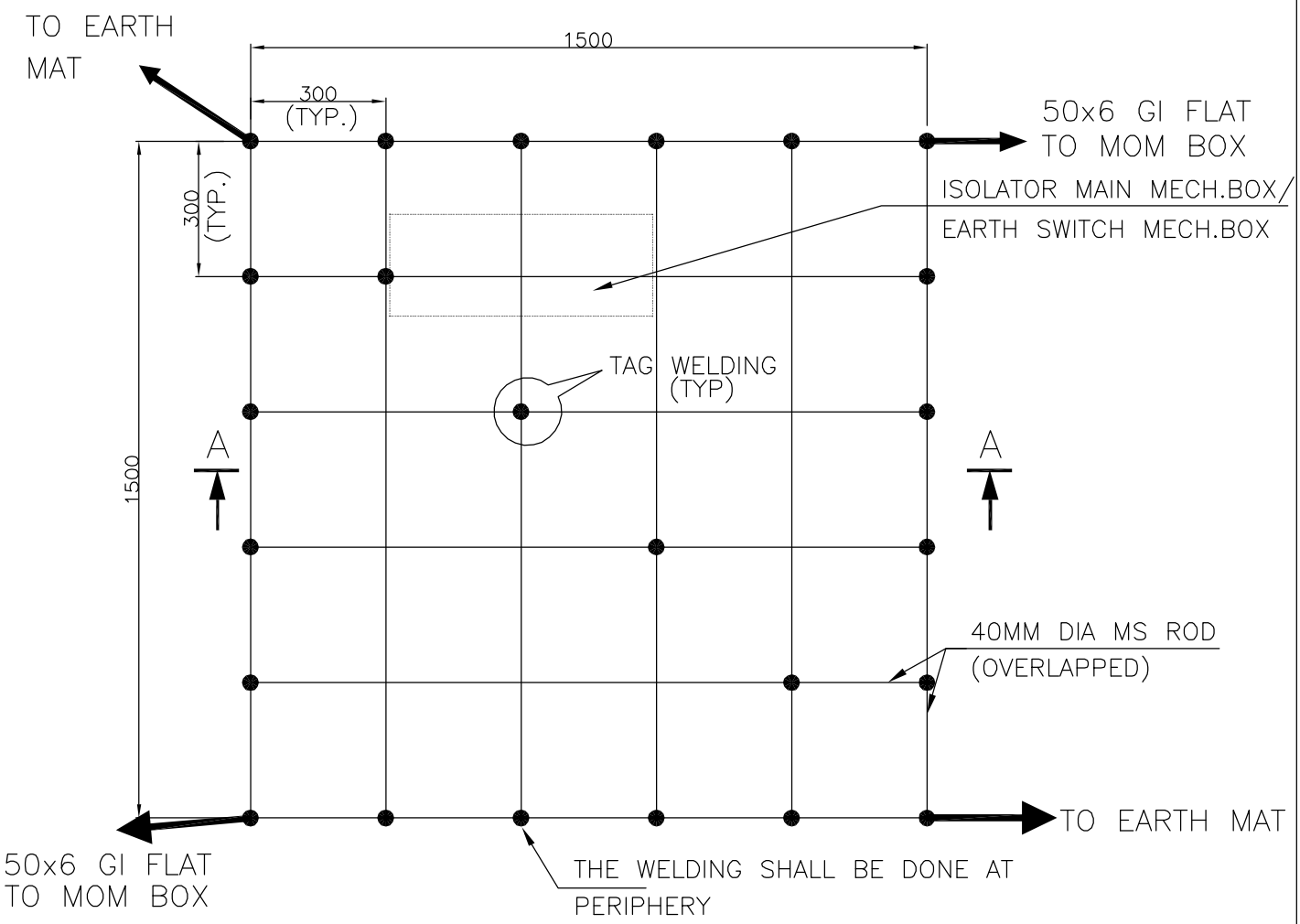

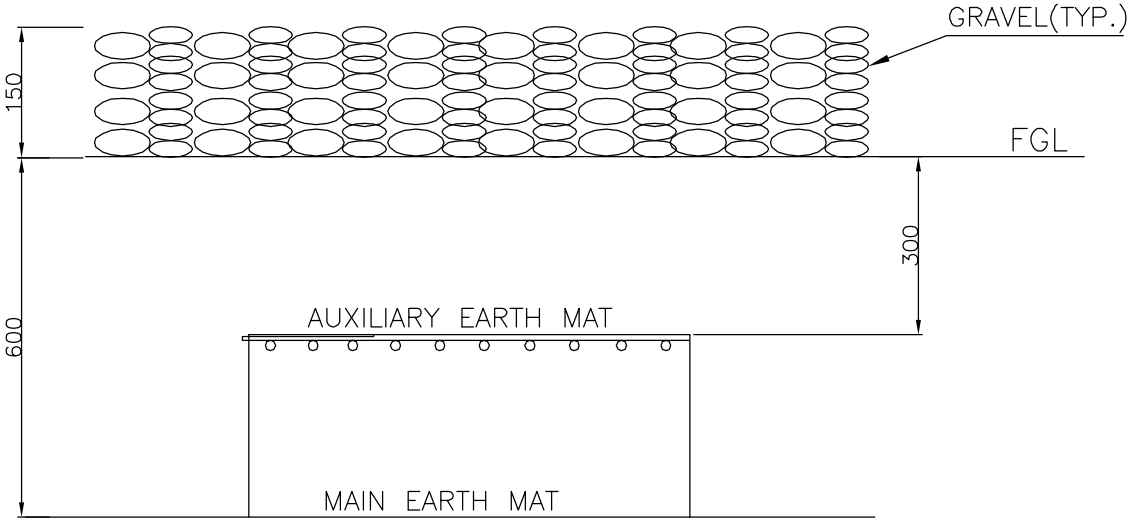

SECTION AA

NOTE:

AUX. EARTH MAT SHALL BE SO POSITIONED THAT THE FOOT OF THE OPERATOR ALWAYS LIE OVER THE AUX. EARTH MAT AREA WHILE ATTENDING / OPERATING THE MECH. BOX.

बीएचईएल BHEL	EQUIPMENT EARTHING DETAILS AUXILIARY EARTH MAT FOR ISOLATOR MAIN MECH.,E/S MECH. BOX	
COMPU. DRG. REF.	DRG. No. TB-4-398-316-016	SHEET No. 06

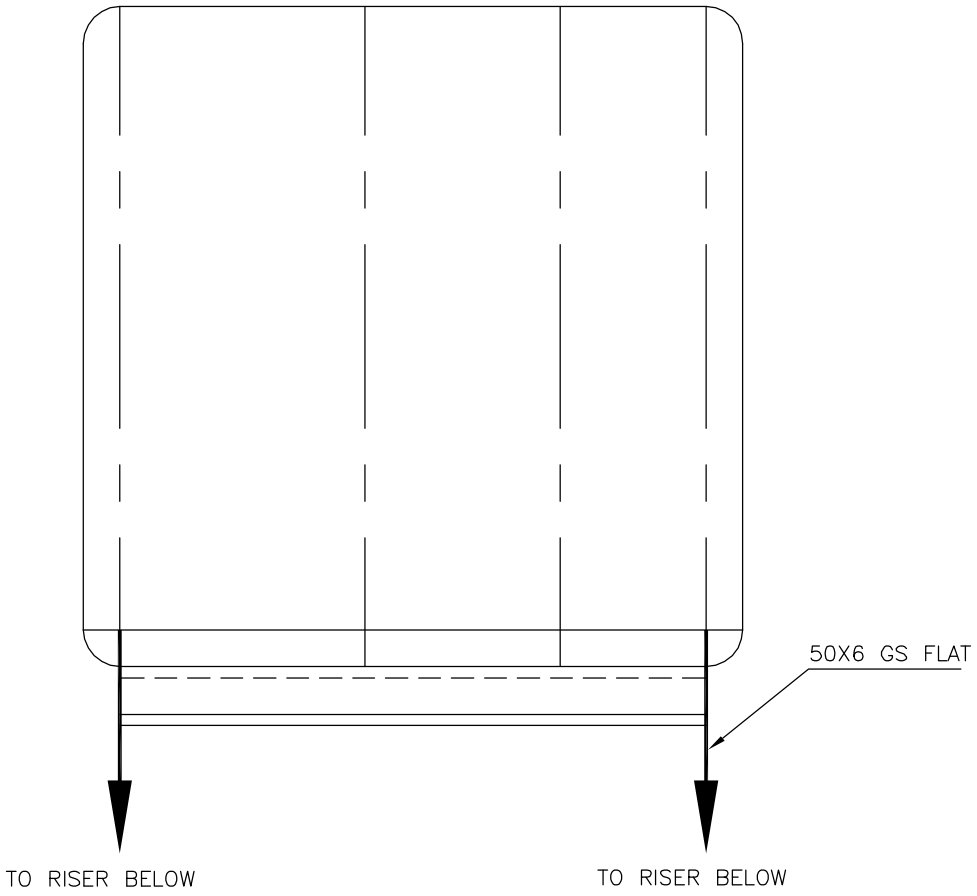

EQUIPMENT

CONTROL & RELAY PANELS

NOTE:–

1. THIS EARTHING ARRANGEMENT IS ALSO APPLICABLE FOR SWITCHGEAR; PANELS; CRP/LCC PANELS; AC/DC DISTRIBUTION BOARD; BATTERY CHARGERS / CVTJB.

बीएचईएल BHEL	EQUIPMENT EARTHING DETAILS CONTROL AND RELAY PANELS	
	DRG. No. TB–4–398–316–016	SHEET No. 07

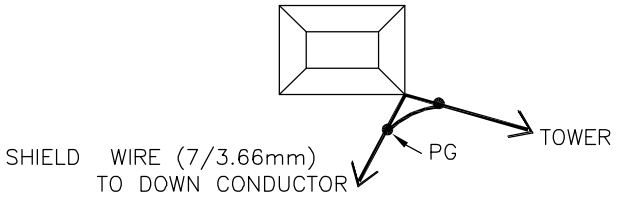

DETAIL WHEN 2 E/WIRE TERMINATES AT TOWER

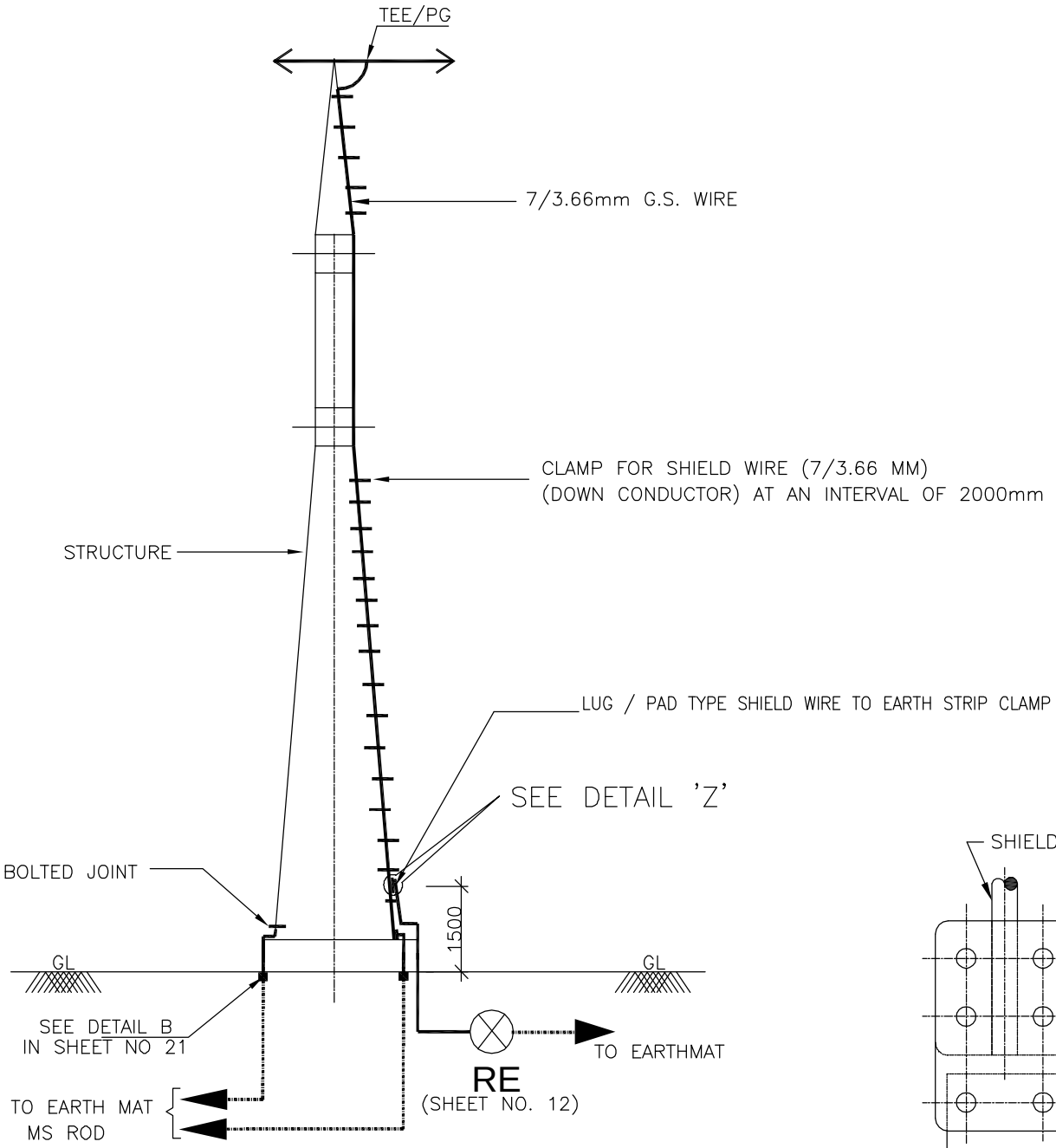

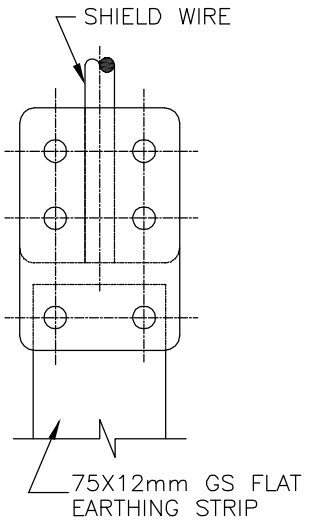

DETAIL – Z

NOTES:

1. NO. OF RISER FOR TOWER = 2 Nos.
2. NO. OF RISER FOR ROD ELECTRODE = 1No.

बीएचईएल BHEL	EQUIPMENT EARTHING DETAILS TOWER WITH PEAK	
COMPU. DRG. REF.	DRG. No. TB–4–398–316–016	SHEET No. 08

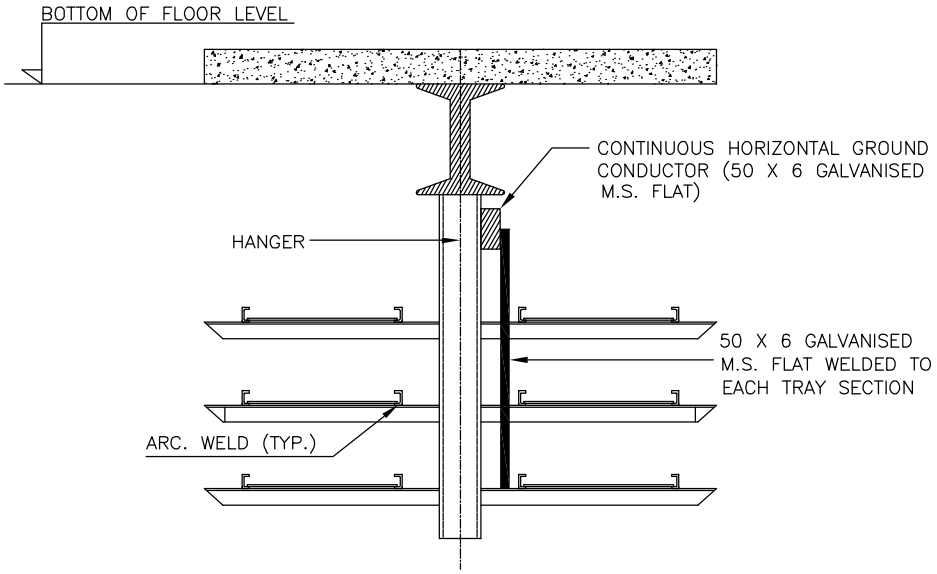

NOTE:

1. ALL TRENCHES SHALL BE EARTHED AT AN INTERVAL OF 20M ALONG THE LENGTH OF TRENCH & FREE ENDS.
2. THE EARTH STRIP (75X12 G.S. FLAT) SHALL BE WELDED/CLEATED TO TOP RACK ALONG THE TRENCH RUN & CONTROL ROOM AT EVERY 1.5 M.
3. CABLE & CABLE TRAY EARTHING SHALL BE DONE AS PER SPECIFICATION.
5. THE EARTHING CONDUCTOR RUNNING UNDER THE TRENCHES SHALL BE LAID 300MM BELOW THE TRENCHES.

बीएचईएल BHEL	EQUIPMENT EARTHING DETAILS CABLE TRENCH	
COMPU. DRG. REF.	DRG. NO. TB-4-398-316-016	SHEET No. 09

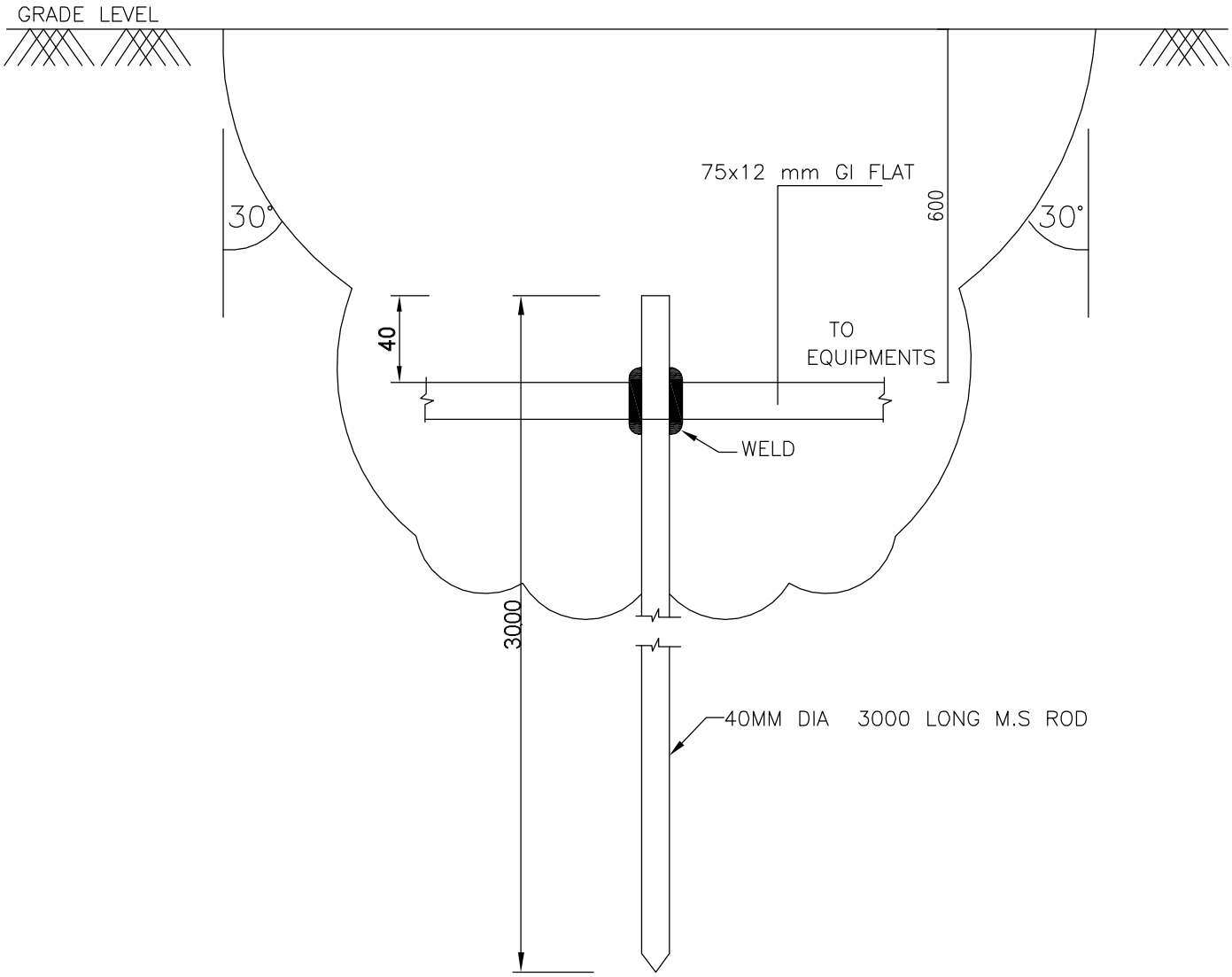

EQUIPMENT EARTHING DETAILS

ROD EARTH ELECTRODE WITHOUT TEST PIT

COMPU. DRG. REF.	DRG. NO.	SHEET No.
	TB-4-398-316-016	10

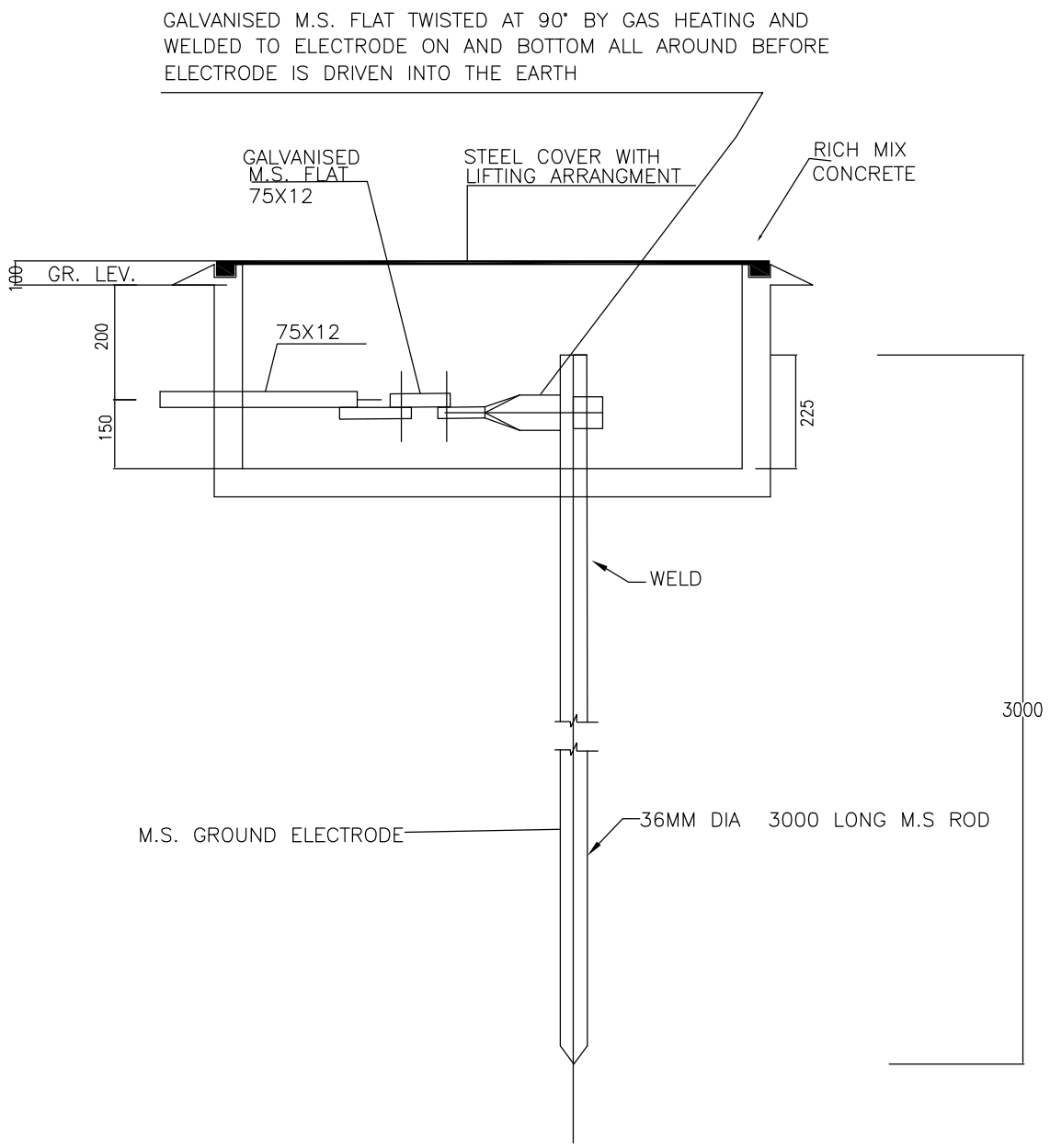

NOTES:–

1. SUPPLY OF FIXING BOLTS NUTS & WASHERS FOR GS FLAT EARTHING CONDUCTOR IS ALSO PART OF THE SCOPE.
2. WILL BE PROVIDED FOR CONNECTION TO EXISTING EARTHMAT OR CONNECTION TO TRANSFORMER YARD EARTHMAT

बीएचईएल BHEL	EQUIPMENT EARTHING DETAILS ROD EARTH ELECTRODE WITH TEST PIT	
COMPU. DRG. REF.	DRG. NO. TB–4–398–316–016	SHEET No. 11

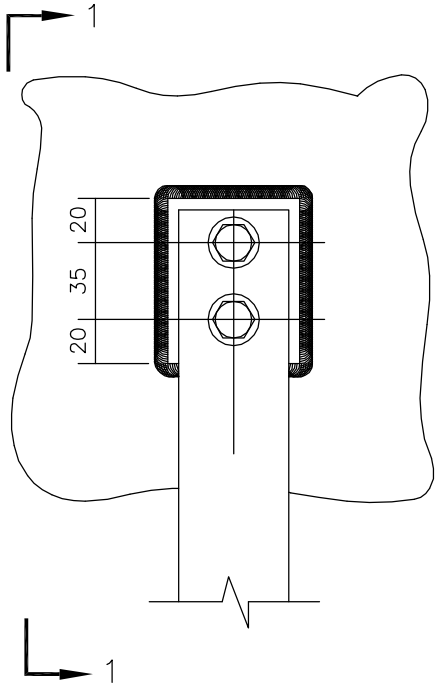

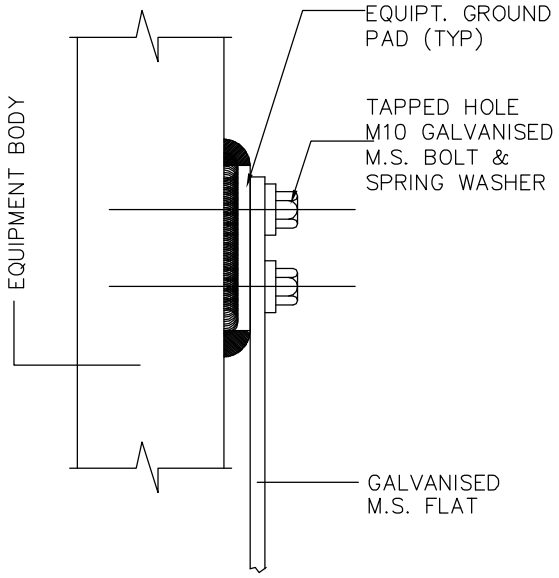

SECTION 1–1

EQUIPMENT GROUNDING

NOTE

1. THIS IS GENERAL TYPICAL BOLTING ARRANGEMENT APPLICABLE TO ALL PANELS, EQUIPMENT ETC. WHERE BOLTING ARRANGEMENT IS PROVIDED.

बीएचईएल BHEL	EQUIPMENT & STRUCTURE EARTHING DETAILS TYPICAL ARRANGEMENT OF BOLTED JOINTS	
COMPU. DRG. REF.	DRG. No. TB–4–398–316–016	SHEET No. 12

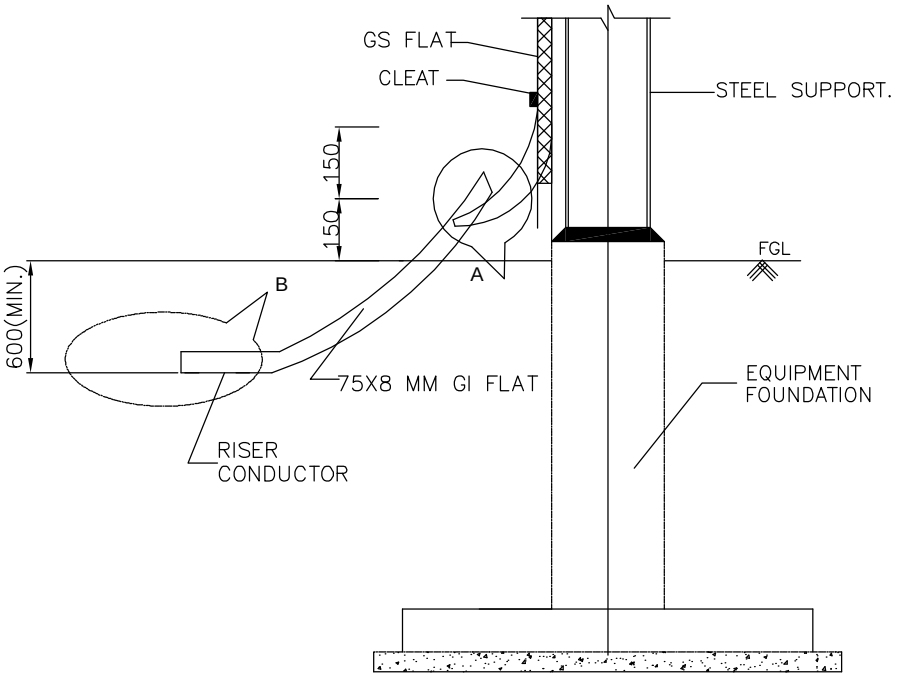

TYPICAL DETAILS OF RISER

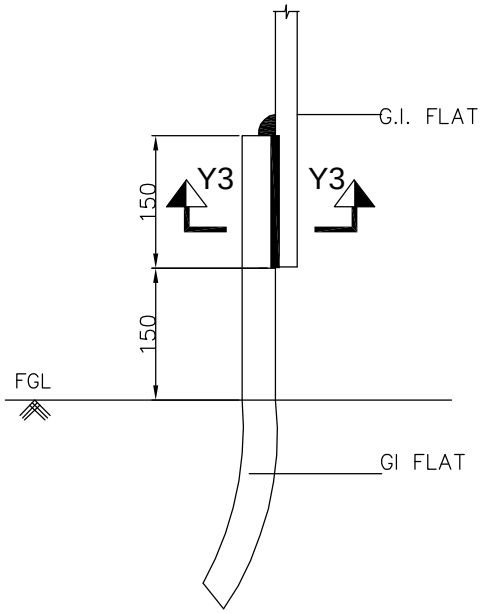

ELEVATION
DETAIL–A

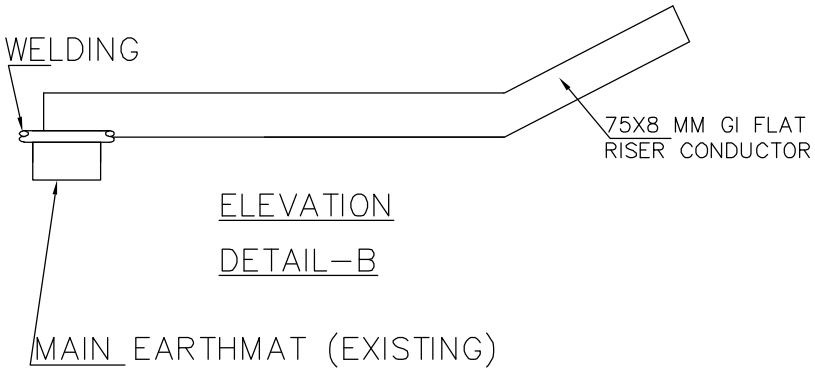

ELEVATION
DETAIL–B

बीएचईएल BHEL	EQUIPMENT & STRUCTURE EARTHING DETAILS TYPICAL ARRANGEMENT OF RISER	
COMPU. DRG. REF.	DRG. No. TB–4–398–316–016	SHEET No. 13

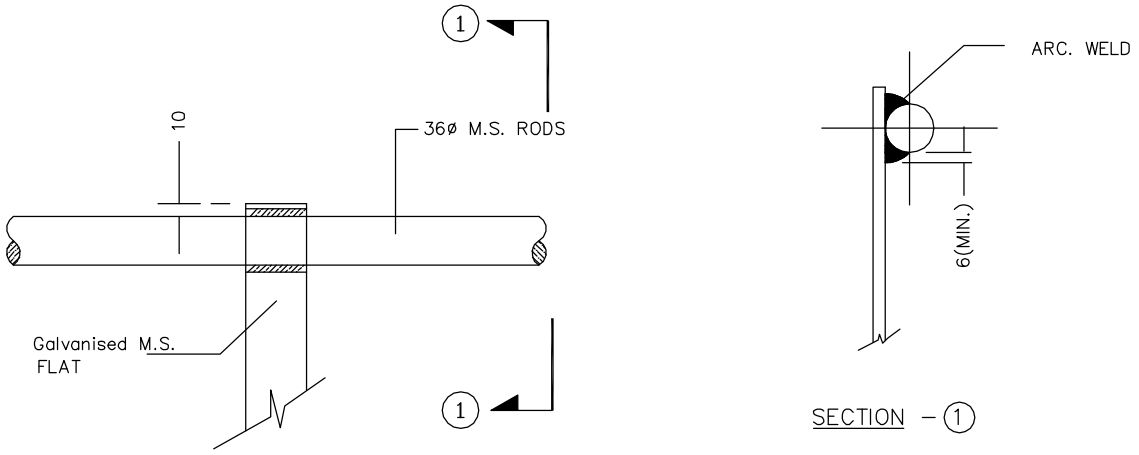

CROSS JOINT
BETWEEN M.S. ROD & GALVANISED M.S. FLATS

STRIP TO STRIP STRAIGHT LAP JOINT

बीएचईएल BHEL	EQUIPMENT & STRUCTURE EARTHING DETAILS WELDING DETAILS	
COMPUTERREF.NO.	DRG. No. TB–4–398–316–016	SHEET No. 14

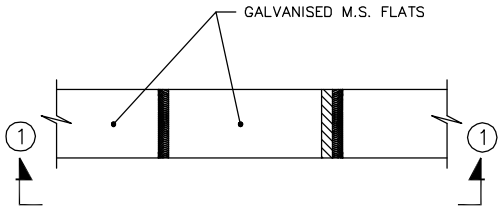

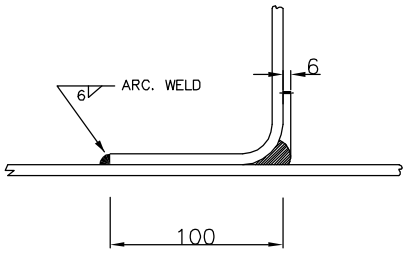

SECTION – 1

ANGULAR JOINT
BETWEEN GALVANISED M.S. FLATS

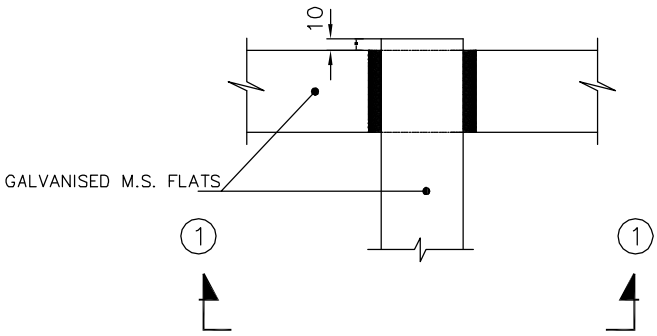

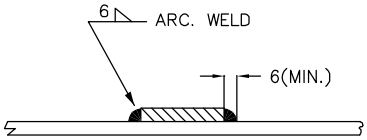

SECTION – 1

CROSS JOINT
BETWEEN GALVANISED M.S. FLATS

बीएचईएल BHEL	EQUIPMENT & STRUCTURE EARTHING DETAILS WELDING DETAILS	
COMPUTERREF.NO.	DRG. No. TB–4–398–316–016	SHEET No. 15

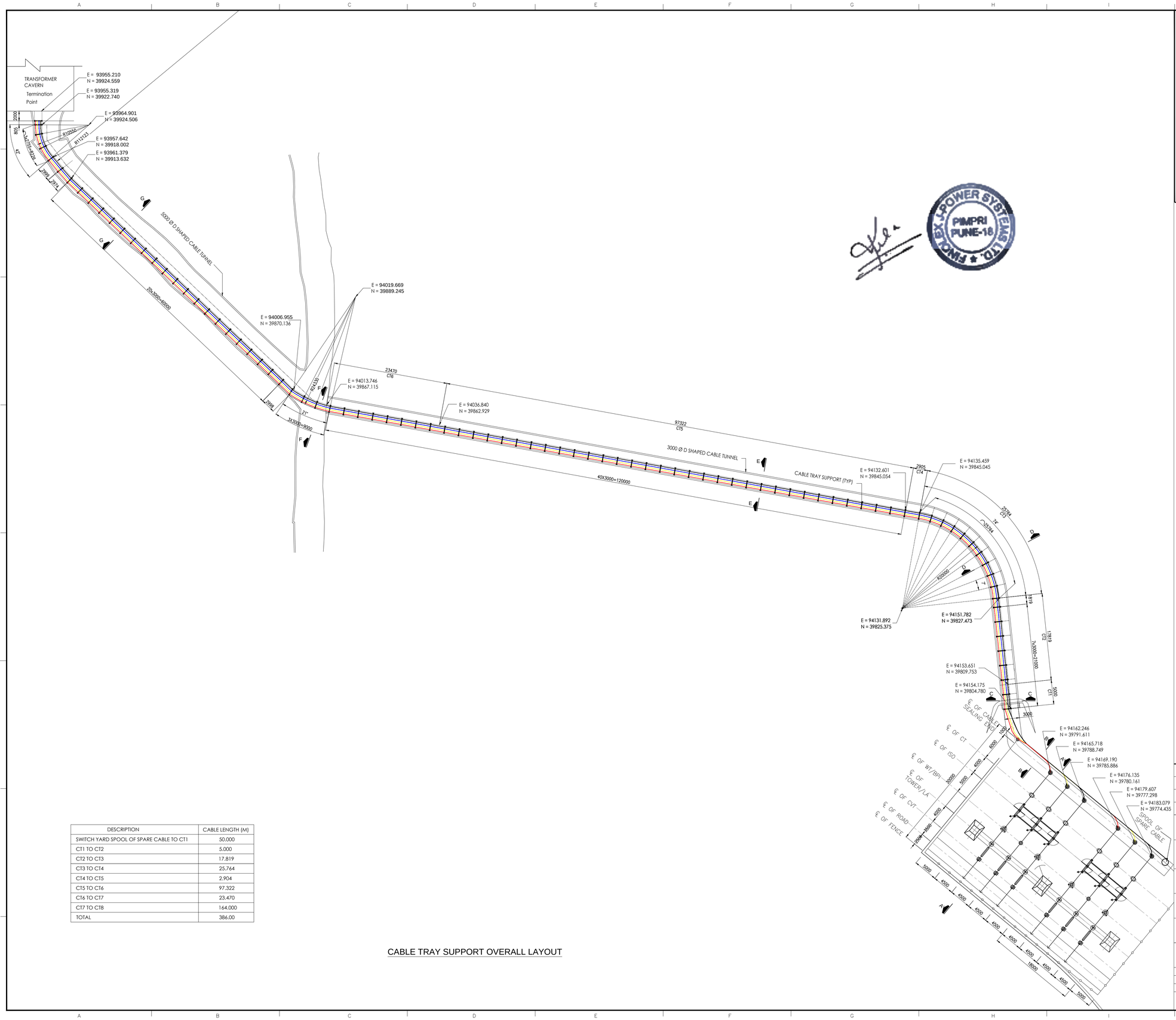

DESCRIPTION	CABLE LENGTH (M)
SWITCH YARD SPOOL OF SPARE CABLE TO CT1	50.000
CT1 TO CT2	5.000
CT2 TO CT3	17.819
CT3 TO CT4	25.764
CT4 TO CT5	2.904
CT5 TO CT6	97.322
CT6 TO CT7	23.470
CT7 TO CT8	164.000
TOTAL	386.00

CABLE TRAY SUPPORT OVERALL LAYOUT

KEY PLAN:

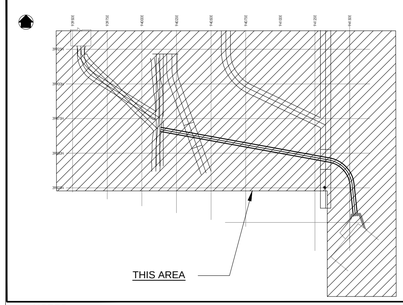

NOTES :

1. ALL DIMENSIONS AND ELEVATIONS ARE IN MILLIMETERS (mm) & COORDINATES ARE IN METERS UNLESS NOTED OTHERWISE.

LEGEND :

TYP. – TYPICAL

REV	DATE	NATURE OF REVISION & DESCRIPTION	DRAWN	CHECKED	APPD
A	16/12/2022	ISSUED FOR REVIEW	KAMAL	-	

OWNER : LANCO TEESTA HYDRO POWER LIMITED (LTHPL)

CONSULTANT : एन एच पी सी लिमिटेड. (भारत सरकार का उद्यम) NHPC Limited (A GOVT. OF INDIA ENTERPRISE)

PROJECT : तीस्ता (चरण– VI) जलविद्युत परियोजना TEESTA (STAGE-VI) H.E. PROJECT

CONTRACTOR : BHARAT HEAVY ELECTRICALS LTD.

SUB-CONTRACTOR : FINOLEX J-POWER SYSTEMS LTD.

TITLE : OVERALL CABLE LAYOUT

DRAWN : KAMAL	CHECKED 1:250	SCALE : 1:250	
REVIEWED : -		DATE : 16/12/2022	
APPROVED : -		SHEETS : 1 OF 2	
DRAWING NO. LTH-STR-CT-DWG-001			REV. A

FORMATO DIN A–1 (841x594)

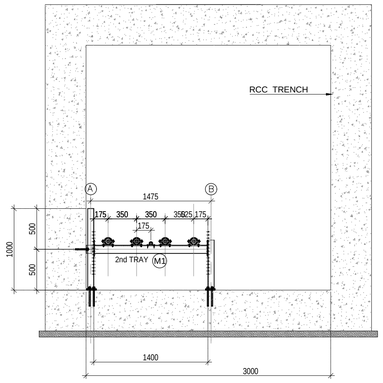

SECTION A-A
(SCALE 1:25)

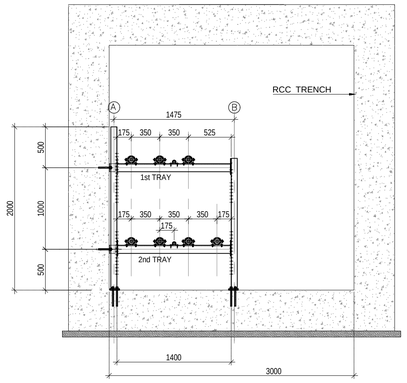

SECTION B-B
(SCALE 1:25)

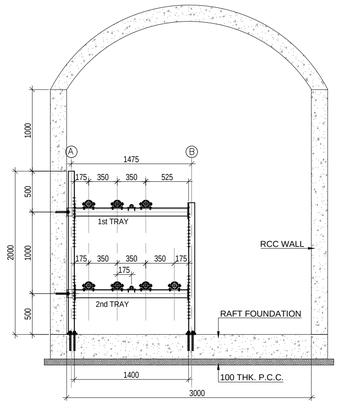

SECTION C-C
(SCALE 1:25)

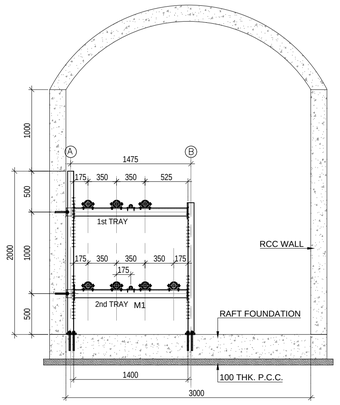

SECTION D-D
(SCALE 1:25)

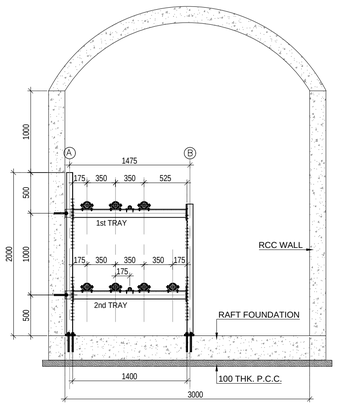

SECTION E-E
(SCALE 1:25)

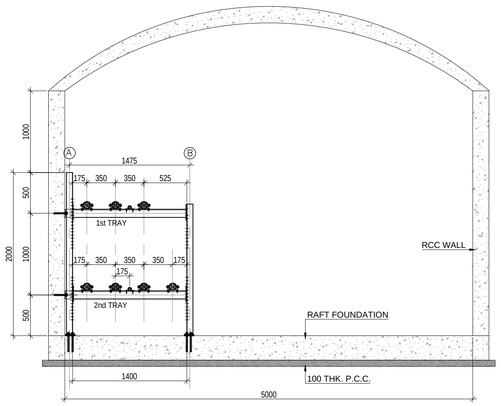

SECTION F-F
(SCALE 1:25)

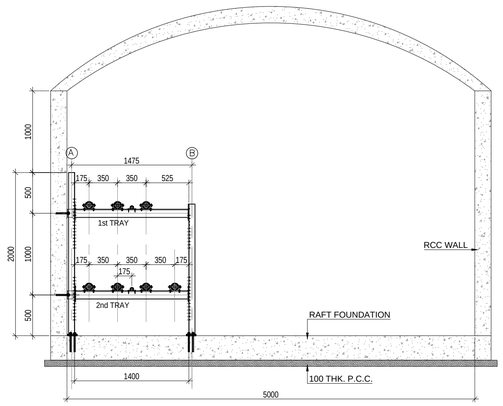

SECTION G-G
(SCALE 1:25)

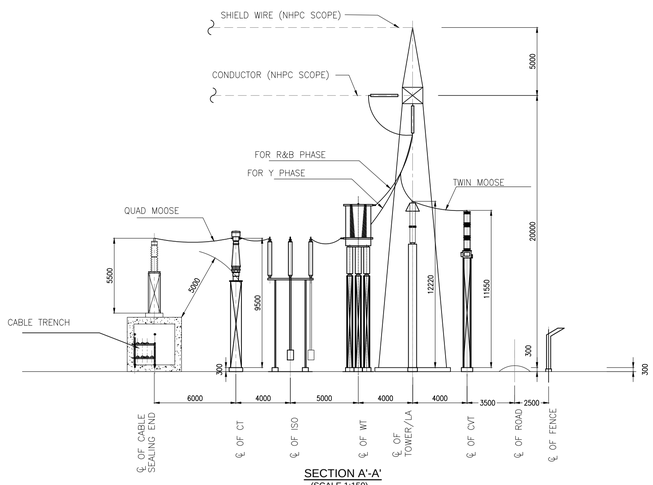

SECTION A'-A'
(SCALE 1:150)

KEY PLAN:

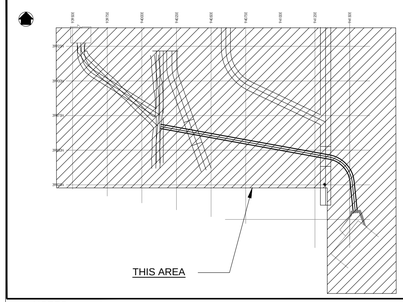

NOTES :

1. ALL DIMENSIONS AND ELEVATIONS ARE IN MILLIMETERS (mm) & COORDINATES ARE IN METERS UNLESS NOTED OTHERWISE.
2. EXACT SIZE AND HEIGHT OF BUSHING SUPPORT WILL BE FINALIZED AFTER RECEIVING TYPES AND WEIGHT OF BUSHING AND ACCESSORIES.

LEGEND :

TYP. – TYPICAL

FINOLEX J-POWER SYSTEMS LTD. PIMPRI PUNE-18

REV	DATE	NATURE OF REVISION & DESCRIPTION	DRAWN	CHECKED	APPD
A	16/12/2022	ISSUED FOR REVIEW	KAMAL	-	

OWNER :	LANCO TEESTA HYDRO POWER LIMITED (LTHPL)
CONSULTANT:	एन एच पी सी लिमिटेड. (भारत सरकार का उद्यम) NHPC Limited (A GOVT. OF INDIA ENTERPRISE)
PROJECT :	तीस्ता (चरण– VI) जलविद्युत परियोजना TEESTA (STAGE-VI) H.E. PROJECT
CONTRACTOR :	BHARAT HEAVY ELECTRICALS LTD.
SUB-CONTRACTOR :	FINOLEX J-POWER SYSTEMS LTD.
TITLE :	OVERALL CABLE LAYOUT

DRAWN : KAMAL	CHECKED 1:250	SCALE : 1:250	
REVIEWED : -		DATE : 16/12/2022	
APPROVED : -		SHEETS : 2 OF 2	
DRAWING NO. LTH-STR-CT-DWG-001			REV. A

FORMATO DIN A–1 (841x594)

FIRST ANGLE PROJECTION

ALL DIMENSIONS ARE IN mm

DRG. NO. TB-2-415-316-008

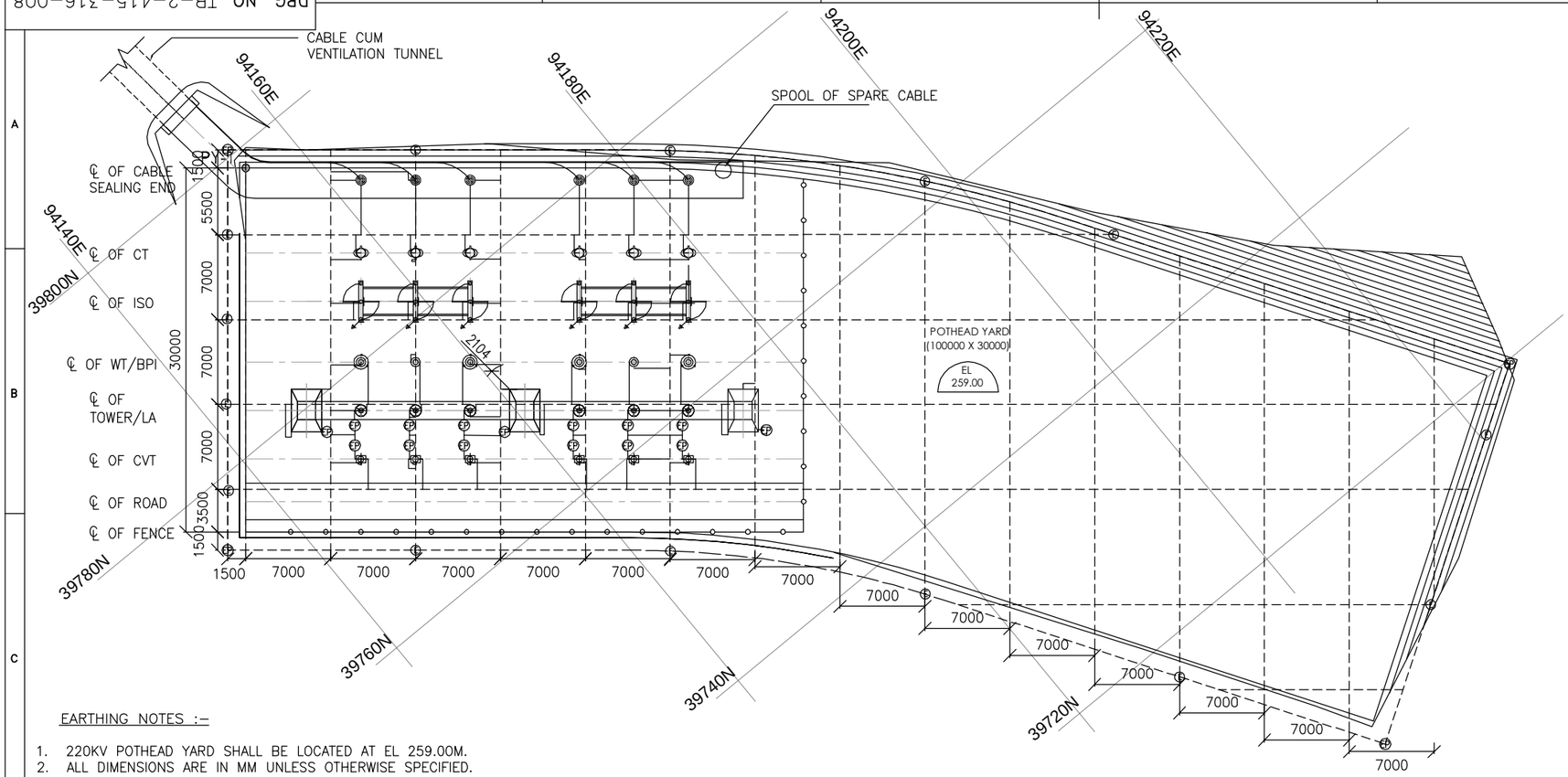

LEGENDS:

- 40MM DIA MS ROD
- RISERS
- (E) ROD ELECTRODE – 14 NOS.
- (EP) ROD ELECTRODE – 19 NOS. (WITH TEST PIT)

EARTHING NOTES :–

1. 220KV POTHEAD YARD SHALL BE LOCATED AT EL 259.00M.
2. ALL DIMENSIONS ARE IN MM UNLESS OTHERWISE SPECIFIED.
3. ROUTING OF CONDUCTOR IS TENTATIVE, & MARGINAL SHIFTING OF CONDUCTOR TO AVOID INTERFERENCES OF STRUCTURE/FOUNDATION, CABLE TRENCHES ETC. SHALL BE DONE AT SITE.
4. ALL EQUIPMENTS AND STRUCTURES SHALL, IN GENERAL, BE GROUNDED AT TWO POINTS AT OPPOSITE CORNERS WHETHER SHOWN IN DRG. OR NOT AND THESE SHALL BE CONNECTED TO DIFFERENT PARTS OF THE GROUNDMAT WHEREVER POSSIBLE.
5. GROUNDING CONDUCTORS IN OUTDOOR AREAS SHALL BE BURIED 600MM BELOW FINISHED GROUND LEVEL. TYPICAL EARTHMAT GRID SPACING IS CONSIDERED AS 7M.
6. WHENEVER A GROUNDING CONDUCTOR CROSSES ROADS, CABLE TRENCHES, IT SHALL BE LAID AT LEAST 300MM BELOW THEM, SHALL BE REROUTED ROUND THE EQUIPMENT/STRUCTURE FOUNDATIONS.
7. GROUNDING CONDUCTORS EMBEDDED IN CONCRETE SHALL HAVE APPROXIMATELY 50MM CONCRETE COVER. IF GROUNDING CONDUCTOR IS REQUIRED TO BE EMBEDED IN MAJOR FOUNDATIONS, THEN IT SHALL BE LAID IN A SLEEVE.
8. CONNECTION BETWEEN EQUIPMENT GROUNDING LEADS AND MAIN GROUND CONDUCTORS SHALL BE WELDED TYPE FOR RUST PROTECTION, THE WELDS SHALL BE CLEANED WITH WIRE BRUSH, TREATED WITH RED LEAD PRIMER AND AFTERWARDS THICKLY COATED WITH TWO COATS BITUMEN COMPOUND TO PREVENT CORROSION.
9. ALL GROUND CONNECTIONS SHALL BE MADE BY ELECTRIC ARC WELDING. ALL WELDED JOINTS SHALL BE ALLOWED TO COOL DOWN GRADUALLY TO ATMOSPHERIC TEMPERATURE BEFORE PUTTING ANY LOAD ON THEM. ARTIFICIAL COOLING SHALL NOT BE ALLOWED.
10. BENDING OF LARGE EARTHING ROD SHALL BE DONE PREFERABLE BY GAS HEATING.
11. ALL ARC WELDING OF LARGE DIAMETER CONDUCTORS SHALL BE DONE BY LOW HYDROGEN CONTENT ELECTRODES.
12. LOCATION OF ROD ELECTRODE (E) ARE TENTATIVE, ELECTRODE FOR LA'S & CVT NEUTRAL SHALL BE LOCATED NEAREST TO RESPECTIVE EQUIPMENT (AS POSSIBLE).
13. ALL ELECTRODES SHALL BE 40Ø x 3000MM LONG M.S. ROD
14. ALL STEEL COLUMNS, METALLIC STAIRS ETC. SHALL BE CONNECTED TO THE NEAREST GROUNDING CONDUCTOR BY GROUNDING LEADS. ELECTRICAL CONTINUITY SHALL BE ENSURED BY BONDING THE DIFFERENT SECTION OF HAND RAILS AND METALLIC STAIRS.
15. METALLIC PIPES, CONDUITS AND CABLE TRAY SECTION FOR CABLE INSTALLATION SHALL BE BONDED TO ENSURE ELECTRICAL CONTINUITY AND CONNECTED TO THE GROUNDING CONDUCTOR AT NOT MORE THAN 10 MTRS INTERVAL. APART FROM INTERMEDIATE CONNECTION, BOTH ENDS SHALL ALSO BE CONNECTED TO THE GROUNDING SYSTEM.
16. A SEPARATE GROUNDING CONDUCTOR SHALL BE PROVIDED FOR GROUNDING LIGHTING FIXTURES, RECEPTACLES, SWITCHES, JUNCTION BOXES, LIGHTING CONDUITS ETC.
17. LIGHTING POLES, JUNCTION BOXES ON THE POLES CABLE BOXES/ GLANDS, LOCKOUT SWITCHES ETC. SHALL BE CONNECTED TO THE GROUNDING CONDUCTOR RUNNING ALONGWITH THE SUPPLY CABLE WHICH, INTURN, SHALL BE CONNECTED TO THE GROUNDING GRID CONDUCTOR AT LEAST TWO POINTS.
18. 50x6MM GALVANISED STEEL FLAT SHALL BE USED FOR EARTHING OF CABLE TRENCHES & CONTROL PANELS. ALONG THE LENGTH OF THE TRENCH & AT ALL ENDS OF THE TRENCHES. RISER SHALL BE PROVIDED FOR TRENCH EARTHING AT EVERY 30 MTRS & AT ALL ENDS.
19. FOR EQUIPMENT, FENCE, GATE, ETC. EARTHING DETAILS, REFER EQUIPMENT EARTHING DRAWING.
20. THE RISER CONNECTION TO EARTHMAT WILL BE 40MM DIA ROD. THE RISER TO EQUIPMENT CONNECTION WILL BE BY 75x12mm G.I. FLAT AT TWO POINTS AND EACH RISER SHALL BE BROUGHT OUT DIRECTLYABOVE GROUND FROM THE EARTH MAT.
21. ROD EARTH ELECTRODE WITH TEST PIT SHALL BE PROVIDED FOR EARTHING LA, CVT, DOWN SHIELD WIRE FROM TOWER PEAK AND 4 GRID CORNERS.
22. EARTHMAT SHOULD BE BURIED 1.5M BEYOND FENCE ON ALL SIDES.
23. POSITION OF RISER SHOWN IS SYMBOLIC. ACTUAL LOCATION TO BE DECIDED AT SITE.
24. EARTHING MAT OF SIZE 1.5MX1.5M, COMPRISING CLOSELY SPACED (ABOUT 300MM) 40 DIA MS ROD TO BE PROVIDED BELOW THE OPERATING HANDLES OF DISCONNECTOR AND EARTH SWITCHES. THE MAT SHALL BE LAID 300MM BELOW FGL.
25. ALL ROD ELECTRODES SHALL BE INTERCONNECTED TO THE GRID.
26. TWO RISERS FOR EACH DG NEUTRAL SHALL BE PROVIDED. RISER LOCATION IN YARD TO BE CONFIRMED BY NHPC. HOWEVER, TOTAL ELECTRODES SHALL REMAIN SAME (i.e. 33 NOS.)

REFERENCE DOCUMENTS :–

S.N.	DOCUMENT DESCRIPTION	DOCUMENT NUMBER
1.	LAYOUT PLAN AND SECTION ELEVATION OF 220KV SWITCHYARD AND CLEARANCE DIAGRAM	TB–2–415–316–008, R02

NHPC DOC. NO. TSVI–GRDO6TDOO3–C

OWNER: LTHP LTD. (A wholly owned subsidiary of NHPC Ltd.)

CONSULTANT: एन एच पी सी लिमिटेड भारत सरकार का उपक्रम NHPC Limited (A Govt. of India Enterprise)

ADDITIONAL INFORMATION: W.O. No. –

STATUS OF DRAWING: CONTRACT

PROJECT: 4x125 MW TEESTA H.E.PROJECT (STAGE–VI)

DISTRIBUTION OF PRINTS

भारत हेवी इलेक्ट्रिकल्स लिमिटेड ट्रांसमिशन परियोजना विभाग, भोपाल
BHARAT HEAVY ELECTRICALS LTD. TRANSMISSION BUSINESS GROUP, NOIDA

	नाम/ NAME	हस्ता/ SIGN	दिनांक/DATE
बनाया DRN	GV		15.02.22
जाँचा CKD	GV		15.02.22
स्वीकृत APPD	VK		16.02.22

REV.	DATE	ALTERED	CHECKED	APPROVED	DRAWING REVISED AS PER NHPC COMMENTS.
02	08.07.22	GV	GV	VK	
01	31.03.22	GV	GV	VK	DRAWING REVISED AS PER NHPC COMMENTS

विभाग DEPT TBEM; कोड CODE 422; उन. टल. नाप की श्रेणी UNTOL.DIMS. GR.; उनुपात SCALE 1:400; भार WEIGHT (K.G.)

शीर्षक/ TITLE: EARTHMAT LAYOUT DRAWING OF POTHEAD YARD

उसे. ड्राईंग का संदर्भ REF. TO ASSY. DRG.; मद क. ITEM NO.; मद संख्या NO. OF ITEM

ड्राईंग क्र./DRAWING NO. TB–2–415–316–008; पुन./REV 02

पृष्ठ क./SHT. No. 1; पृष्ठों की संख्या/NO. OF SHT. 1

REF. DRG. NO. | SIGN AND DATE | INVENTORY NO.

A2

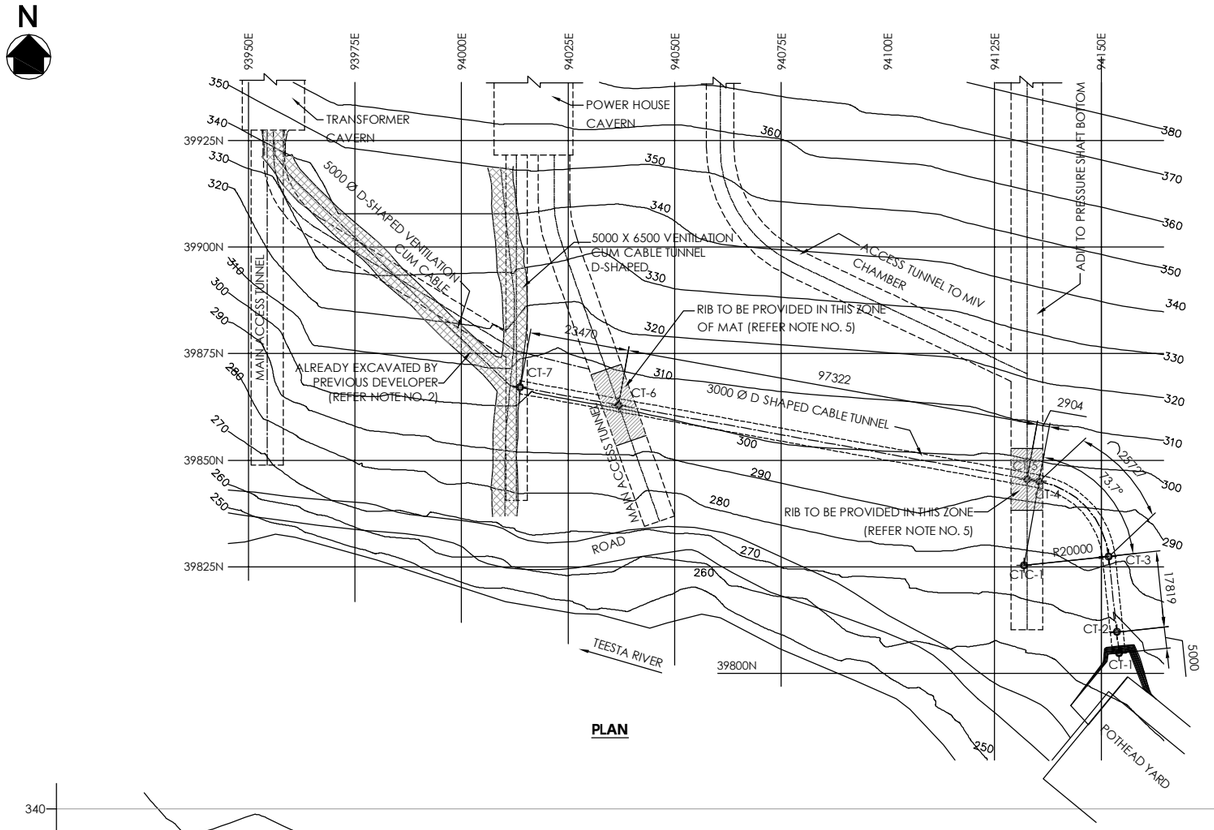

PLAN

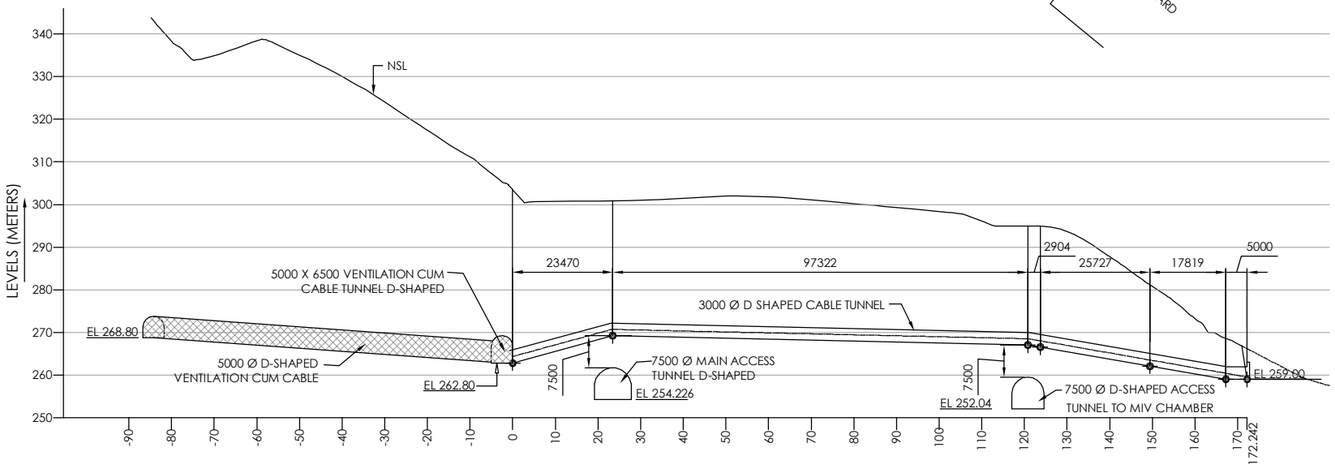

	CT-7	CT-6	CT-5	CT-4	CT-3	CT-2	CT-1
NSL	303.48	300.9	294.9	299.9	281.21	268.57	266.18
TUNNEL INVERT LEVEL	262.800	269.226	267.040	266.537	262.084	259.000	259.000
CUMULATIVE LENGTH	00	23470	120792	123696	149423	167242	172242
PARTIAL LENGTH	23470	97322	2904	25727	17819	5000	
SLOPE	1 IN 3.652	SLOPE 1 IN 44.521		SLOPE 1 IN 5.777		NO SLOPE	
CURVE DATA				R = 20000			

LONGITUDINAL SECTION

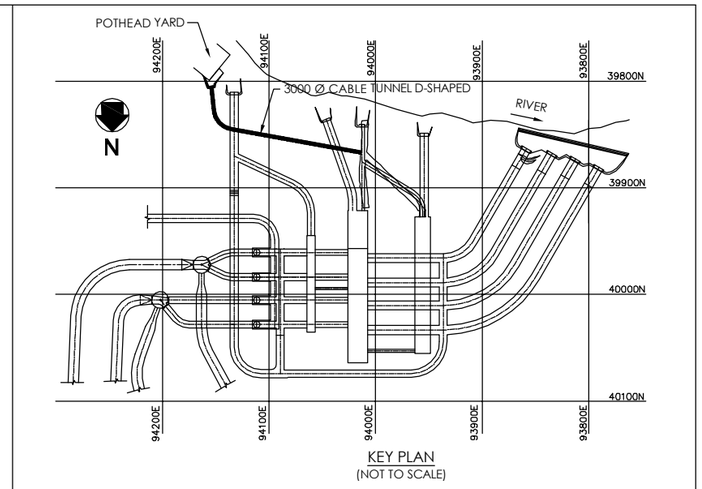

KEY PLAN
(NOT TO SCALE)

CO-ORDINATES:-

POINT	EASTING	NORTHING	LEVEL
CT-1	94154.175	39804.780	259.000
CT-2	94153.651	39809.753	259.000
CT-3	94151.782	39827.473	262.084
CT-4	94135.459	39845.054	266.537
CT-5	94132.601	39845.572	267.040
CT-6	94036.840	39862.929	269.226
CT-7	94013.746	39867.115	262.800
CTC-1	94131.892	39825.375	-

NOTES:-

1. ALL DIMENSIONS ARE IN MILLIMETERS AND LEVELS IN METERS.
2. THIS DRAWING HAS BEEN REVISED BASED UPON THE INFORMATION RECEIVED FROM PROJECT VIDE EMAIL DATED 12.07.2022
3. EXISTING STATUS OF WORK SHALL BE VERIFIED ON THE SITE PRIOR TO COMMENCEMENT OF WORK.
4. THIS DRAWING SUPERSEDES DRG. NO. NHTS-VI-4CC2-41-GA-016
5. RIB SHALL BE INSTALLED IN MAT & ADIT TO PRESSURE SHAFT BOTTOM AREA BEFORE CABLE TUNNEL EXCAVATION. FOR RIB DETAILS REFER SEPARATE DRAWING.

SCALE:-
0 10 20 30 40 50 M.

LEGEND:-

ALREADY EXCAVATED BY PREVIOUS DEVELOPER

DATE	NO.	REVISION OR ISSUES	BY	CH.	APP.
12.08.2022	00	ISSUED FOR CONSTRUCTION			

DESIGN MEMO NO. 3105414GC01-0

LANCO TEESTA HYDRO POWER LIMITED (LTHPL)

,u ,p ih lh fyfeVsM
¼eksj ijekq ds ofo|qr
NHPC Limited
(A GOVT. OF INDIA ENTERPRISE)

rhLrk (p.k&VI) tyfo|qr ifj;kstuk
TEESTA (STAGE-VI) H.E. PROJECT

TRANSFORMER CAVERN
CABLE TUNNEL
SETTING OUT DETAIL

DRAWN: mnzsfjr | SUBMITTED: izLrqr | RECOMMENDED: vuq'kalfr | APPROVED: vuqeksnu

DATE: AUGUST, 2022 | DRG. NO. NHTS-VI 4GC2 41 DD 001 00

DRG NO. 4GC2 - 001 - 00

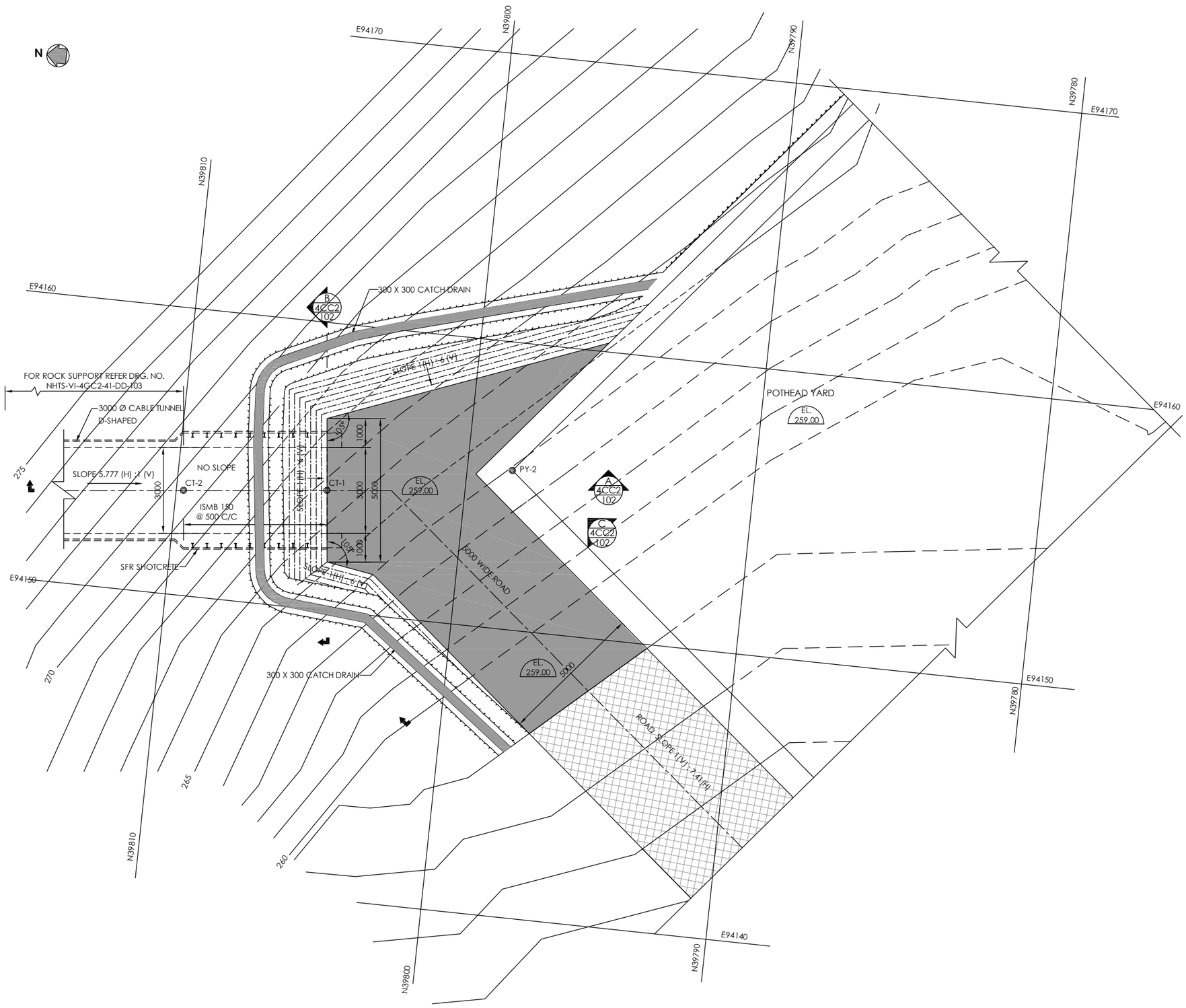

CO-ORDINATES

POINT	EASTING	NORTHING	LEVEL
CT-1	94154.175	39804.780	259.00
CT-2	94153.651	39809.753	259.00
PY-2	94155.544	39798.427	259.00

NOTES:-

1. ALL DIMENSIONS ARE IN MILLIMETERS AND LEVELS IN METERS.
2. EXISTING LEVELS SHALL BE VERIFIED ON SITE PRIOR TO EXCAVATION WORKS.
3. THE SURFACE EXCAVATION INCLUDING PROTECTION AND DRAINAGE OF EXCAVATED SURFACE SHALL CONFORM TO SECTION B.2 OF TECHNICAL SPECIFICATION.
4. EXCAVATION SLOPES MAY BE MODIFIED TO SUIT SITE CONDITIONS WITH THE APPROVAL OF ENGINEER-IN-CHARGE.
5. FOR POTHEAD YARD DETAILS REFER SEPARATE DRAWING.
6. THIS DRAWING SHALL BE READ IN CONJUNCTION WITH DRG NO. NHTS-VI-4GC2-41-DD-102.

SCALE:-

0 1 2 3 4 5 M.

12.08.2022	00	ISSUED FOR CONSTRUCTION			
DATE	NO.	REVISION OR ISSUES	BY	CH.	APP.

DESIGN MEMO NO. fMtkbu ese? la[;k 3105414GC01-0

LANCO TEESTA HYDRO POWER LIMITED (LTHPL)

,u ,p ih lh fyfeVsM
¼ekSjh ljdkj dk mi ze½
NHPC Limited
(A GOVT. OF INDIA ENTERPRISE)

rhLrk (pj.k&VI)tyfo|qr ifj;kstuk

TEESTA (STAGE-VI) H.E. PROJECT

TRANSFORMER CAVERN
CABLE TUNNEL-PORTAL
EXCAVATION PLAN

(SHEET 1 OF 4)

DRAWN	SUBMITTED	RECOMMENDED	APPROVED
mnzs[kr	izLrqr	vuq'kafr	vuqeksnu

DATE		DRG. NO.					
AUGUST, 2022		NHTS-VI	4GC2	41	DD	101	00
fnukad vxLr 2022		mnzs[k la[;k					

DRG. NO. 4GC2-101-00

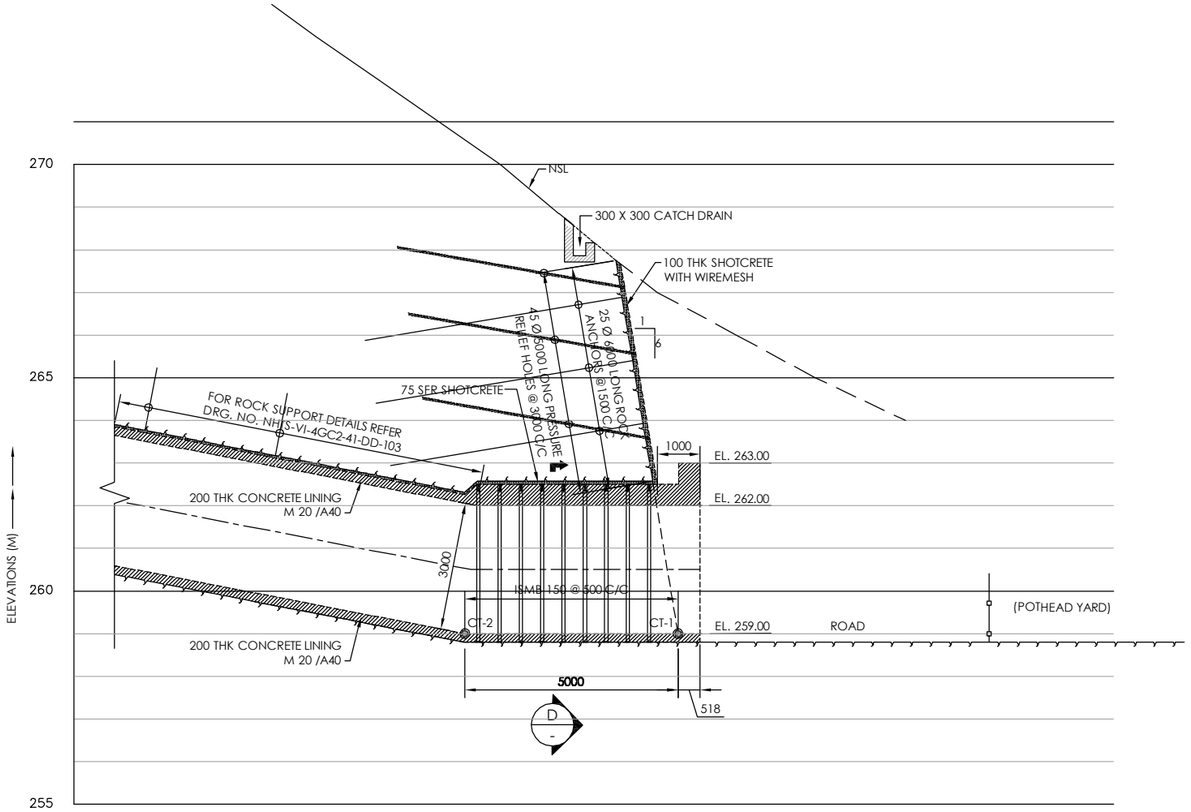

SECTION A 4CC2 101

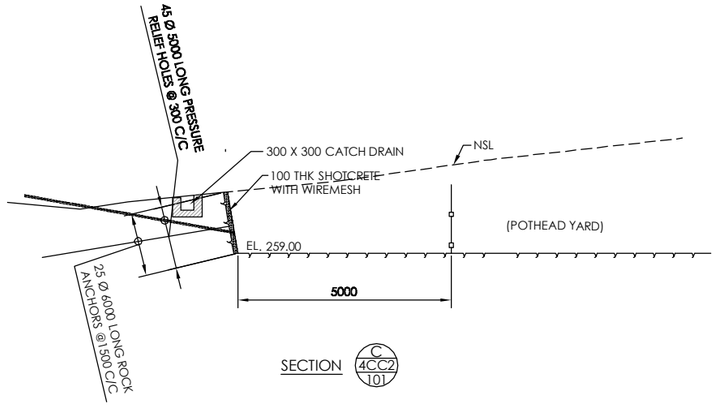

SECTION C 4CC2 101

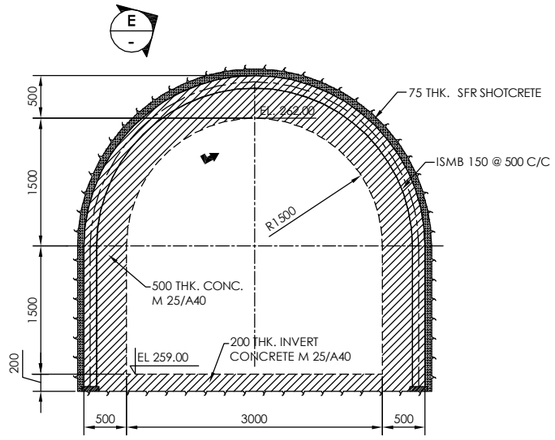

SECTION D -

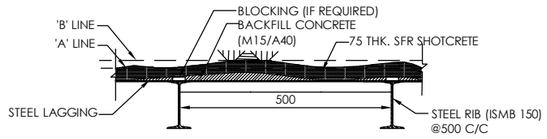

SECTION E -
(NOT TO SCALE)

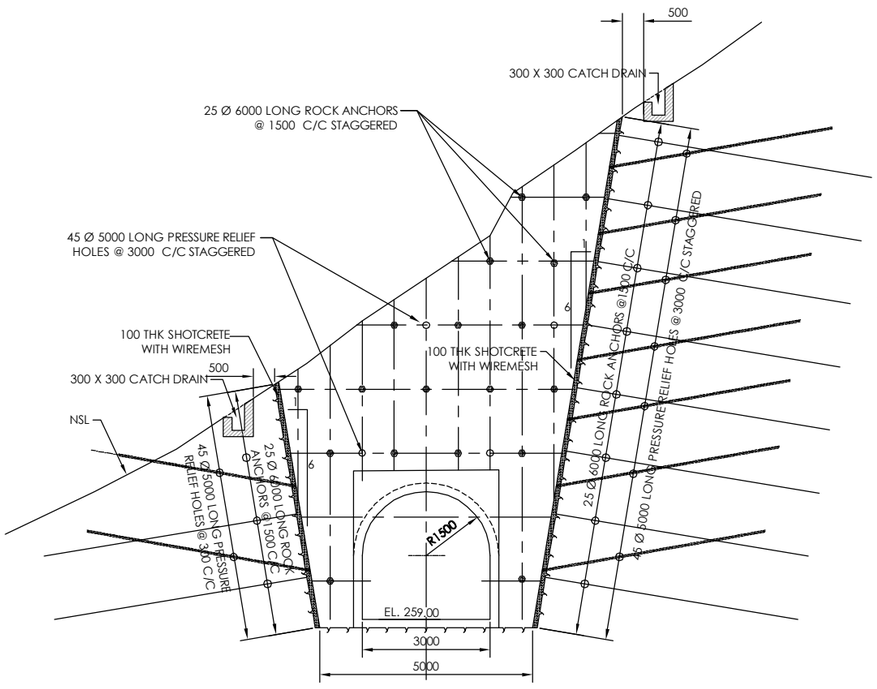

SECTION B 4CC2 101

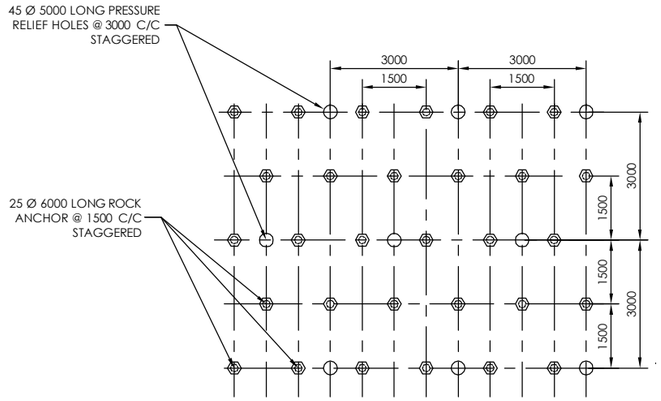

TYPICAL ROCK ANCHOR / PRESSURE RELIEF HOLE PATTERN

NOTES:-

1. ALL DIMENSIONS ARE IN MILLIMETERS AND LEVELS IN METERS.
2. EXISTING LEVELS SHALL BE VERIFIED ON SITE PRIOR TO EXCAVATION WORKS.
3. THE SURFACE EXCAVATION INCLUDING PROTECTION AND DRAINAGE OF EXCAVATED SURFACE SHALL CONFORM TO SECTION B.2 OF TECHNICAL SPECIFICATION.
4. EXCAVATION SLOPES MAY BE MODIFIED TO SUIT SITE CONDITIONS WITH THE APPROVAL OF ENGINEER-IN-CHARGE.
5. THE SPACING OF STEEL RIBS SHOWN, MAY BE MODIFIED TO SUIT THE SITE CONDITIONS WITH THE APPROVAL OF ENGINEER-IN-CHARGE.
6. STEEL LAGGING AS SPECIFIED IN SECTION B.4 OF TECHNICAL SPECIFICATIONS SHALL BE USED WITH THE APPROVAL OF ENGINEER-IN-CHARGE.
7. THE LENGTH, SPACING OF ROCK ANCHORS & PRESSURE RELIEF HOLES MAY BE MODIFIED TO SUIT THE SITE CONDITION WITH THE APPROVAL OF ENGINEER-IN- CHARGE.
8. ROCK ANCHOR SHOWN IN THE DRAWING SHALL BE CONFORMING TO SECTION B.4 OF TECHNICAL SPECIFICATIONS.
9. THE CONCRETE SHALL BE OF GRADE M20/A40 FOR LINING, M25/A40 FOR RCC & M15/A40 FOR BACKFILL UNLESS OTHERWISE SPECIFIED.
10. FOR RIB DETAIL OF PORTAL REFER DRG. NO. NHTS-VI-4GC2 -41-DD- 105.
11. FOR PORTAL CONCRETE AND REINFORCEMENT DETAIL REFER DRG. NO. NHTS-VI-4GC2-41-DD-216.
12. THIS DRAWING SHALL BE READ IN CONJUNCTION WITH DRAWING NO. - NHTS-VI-4GC2-41-DD-101.

SCALE:-

0 1 2 3 4 5 M.

DATE	NO.	REVISION OR ISSUES	BY	CH	APP
12.08.2022	00	ISSUED FOR CONSTRUCTION			

DESIGN MEMO NO. fMtkbu ese? lo[;k 3105414GC01-0

LANCO TEESTA HYDRO POWER LIMITED (LTHPL)

,u ,p ih lh fyfeVsM
¼okjr ljdkj dk mi ze½
NHPC Limited
(A GOVT. OF INDIA ENTERPRISE)

rhLrk (pj.k&VI)tyfo|qr ifj;"tuk

TEESTA (STAGE-VI) H.E. PROJECT

TRANSFORMER CAVERN
CABLE TUNNEL-PORTAL
EXCAVATION SECTIONS

(SHEET 2 OF 4)

DRAWN	SUBMITTED	RECOMMENDED	APPROVED
mnzs[kr	izLrqr	vuq'kafr	vuqeksnu

DATE	DRG. NO.					
AUGUST, 2022 fnukad vxLr 2022	mnzs[k la[;k NHTS-VI	4GC2	41	DD	102	00

DRG. NO. 4GC2-102-00

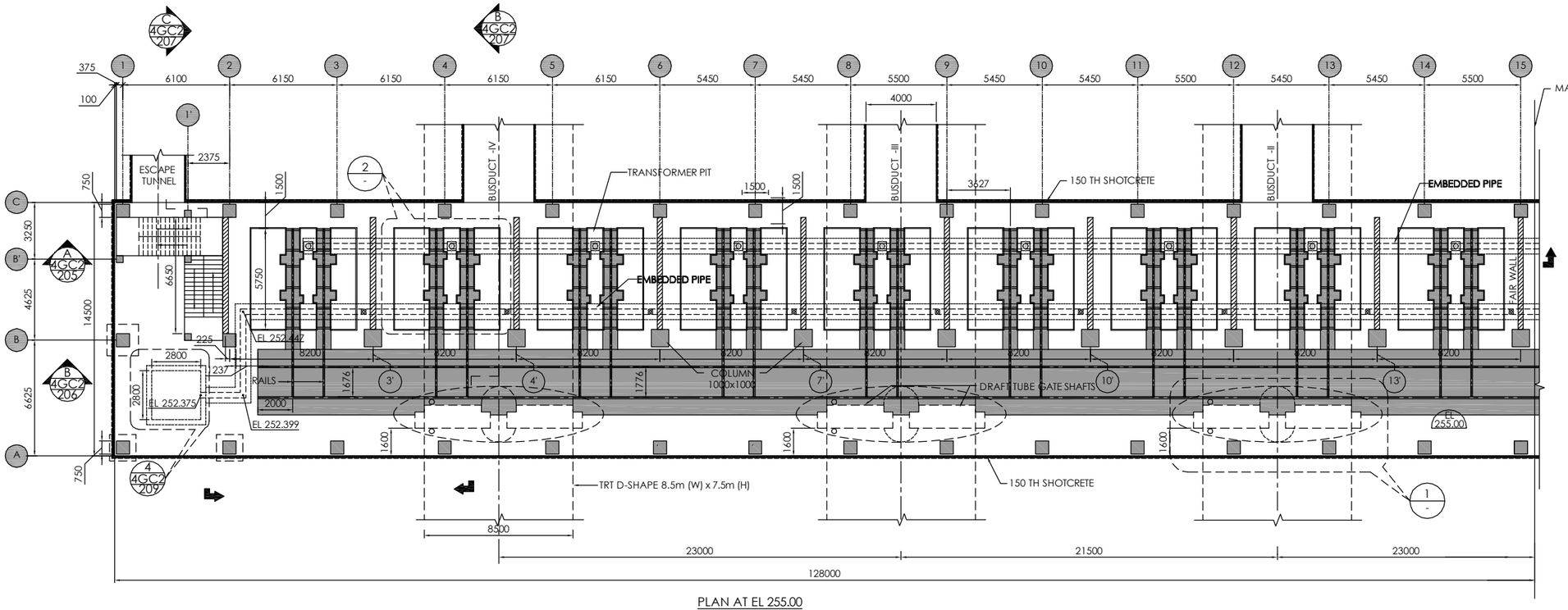

PLAN AT EL 255.00

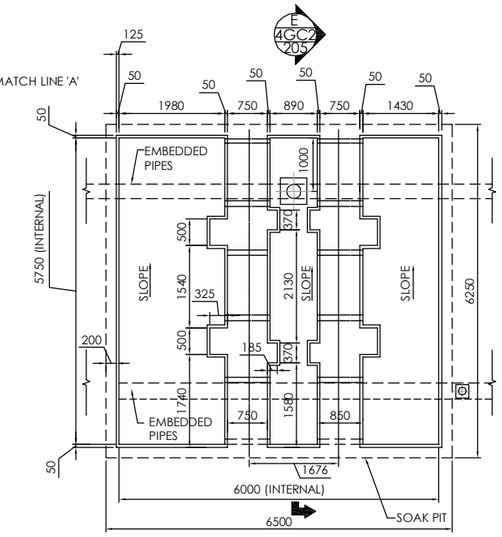

TRANSFORMER PIT

DETAIL 2

SCALE:-

0 1 2 3 4 5 M.

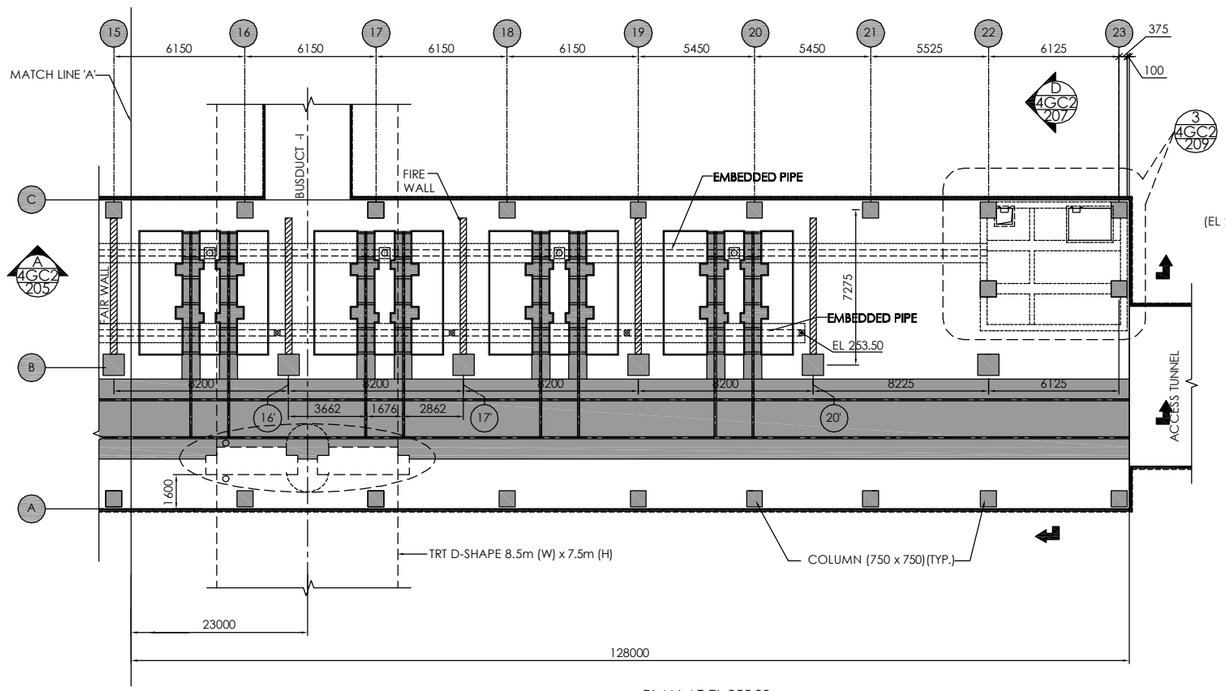

PLAN AT EL 255.00

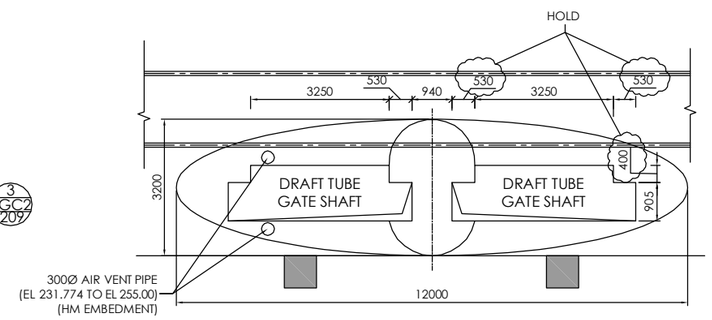

DRAFT TUBE GATE SHAFT

DETAIL 1

SCALE:-

0 1 2 3 4 5 M.

COLUMNS DETAILS

S.NO.	DESCRIPTION	SIZE	TOTAL
1	A 1 TO A 23, B 1, B 2, C 1 TO C 23	750 X 750	48
2	B 6, B 9, B 12, B 15, B 19, B 22, B 2', B 9'	1000 X 1000	14
3	B 1', B' 1, B' 1' & C 1'	400 X 400	4

SCALE:-

0 2 4 6 8 10 M.

rhLrk (p.k&VI) tyfo|qr ifj; "tuk

TEESTA (STAGE-VI) H.E. PROJECT

TRANSFORMER CAVERN

CONCRETE PLAN AT EL 255.00

DATE	OCT, 2021	DRG. NO.	NHTS-VI	4GC2	41	DD	201	00

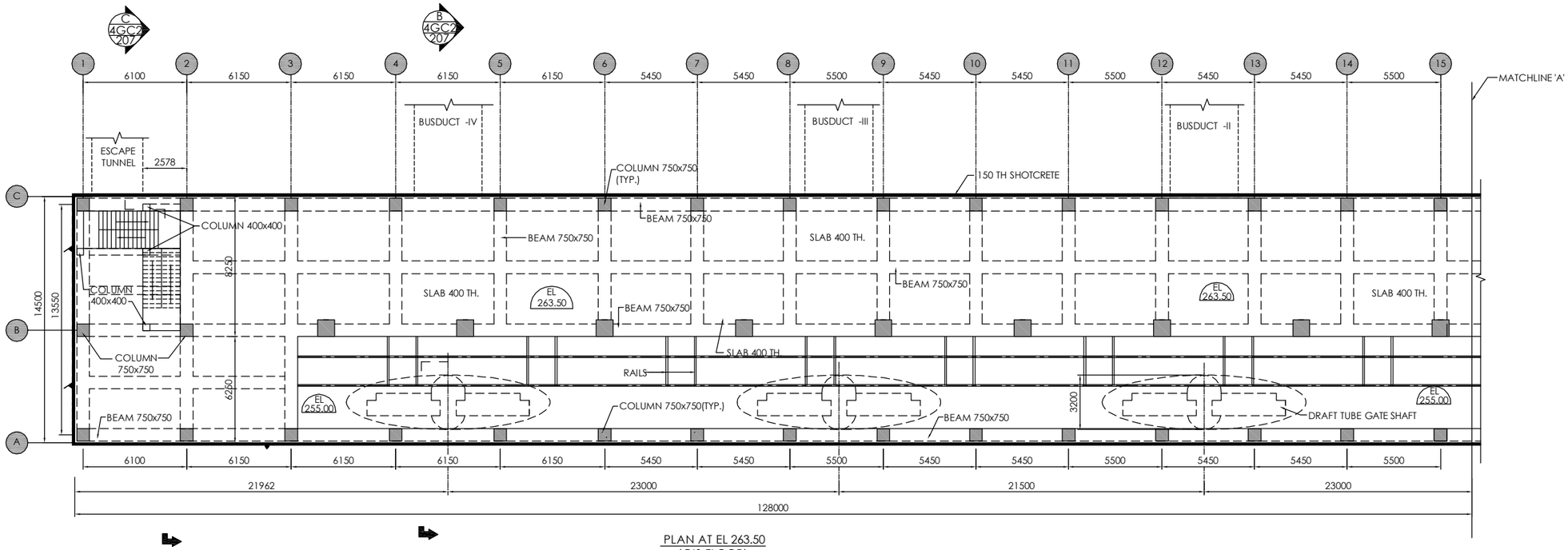

PLAN AT EL 263.50
(GIS FLOOR)

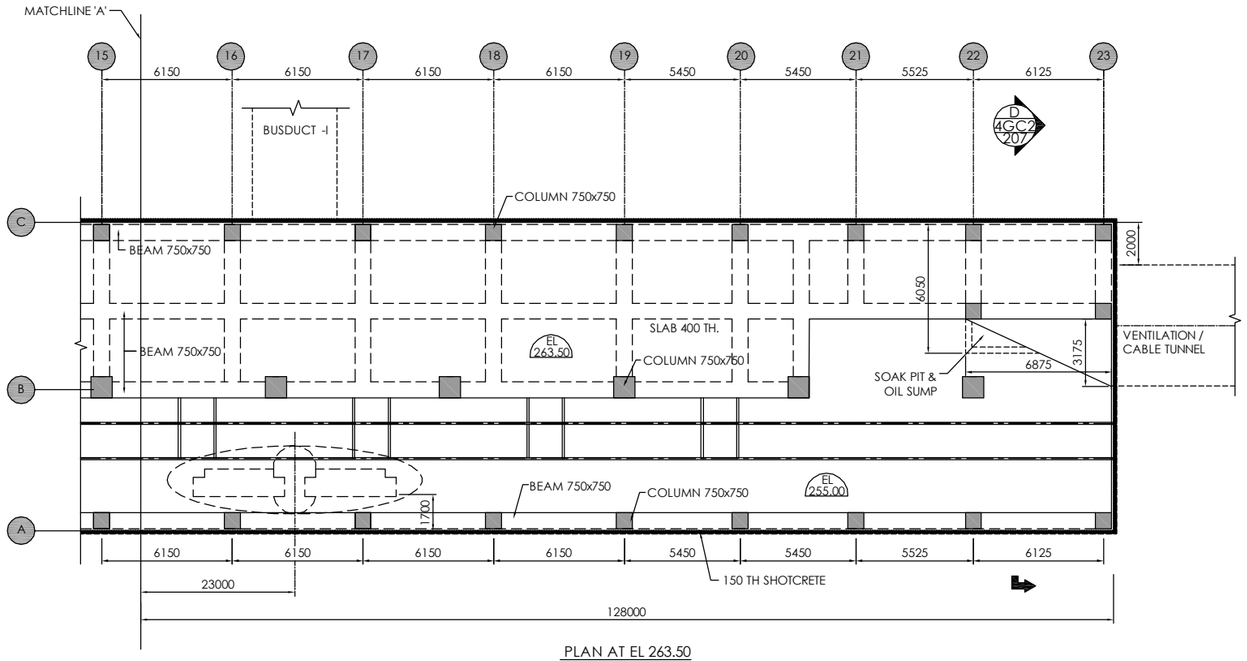

PLAN AT EL 263.50
(GIS FLOOR)

SCALE:-

0 2 4 6 8 10 M.

rhLrk (p.j.k&VI) tyfo/qr if.j; "tuk
TEESTA (STAGE-VI) H.E. PROJECT

TRANSFORMER CAVERN
CONCRETE PLAN
AT EL 263.50

DATE	OCT, 2021	DRG. NO.	NHTS-VI	4GC2	41	DD	204	00

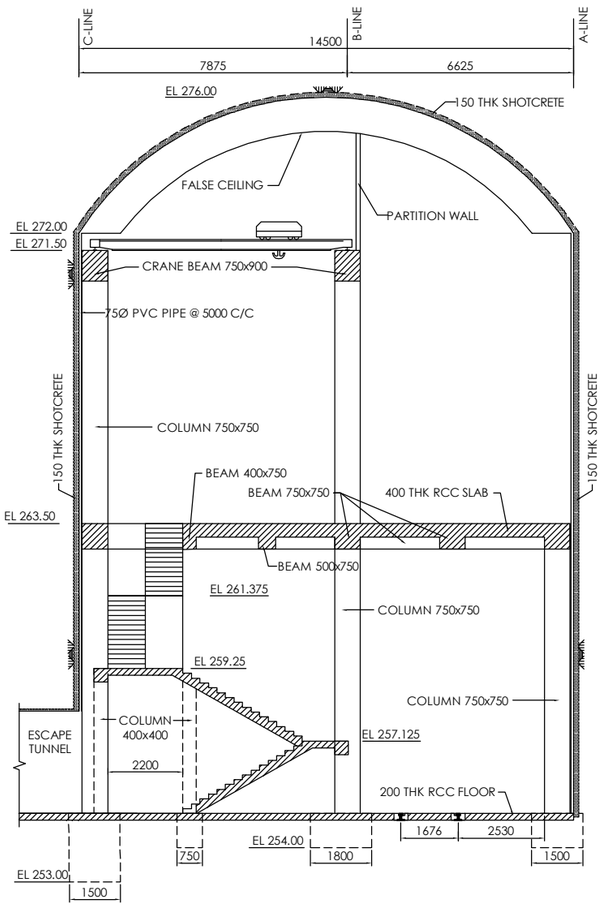

SECTION C 4GC2 201

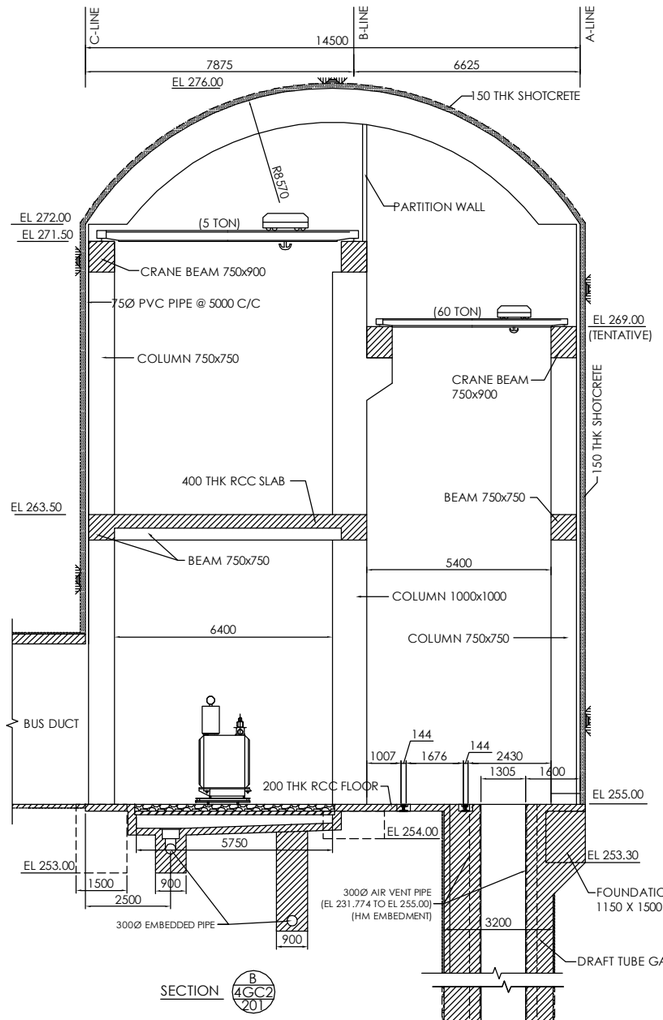

SECTION B 4GC2 201

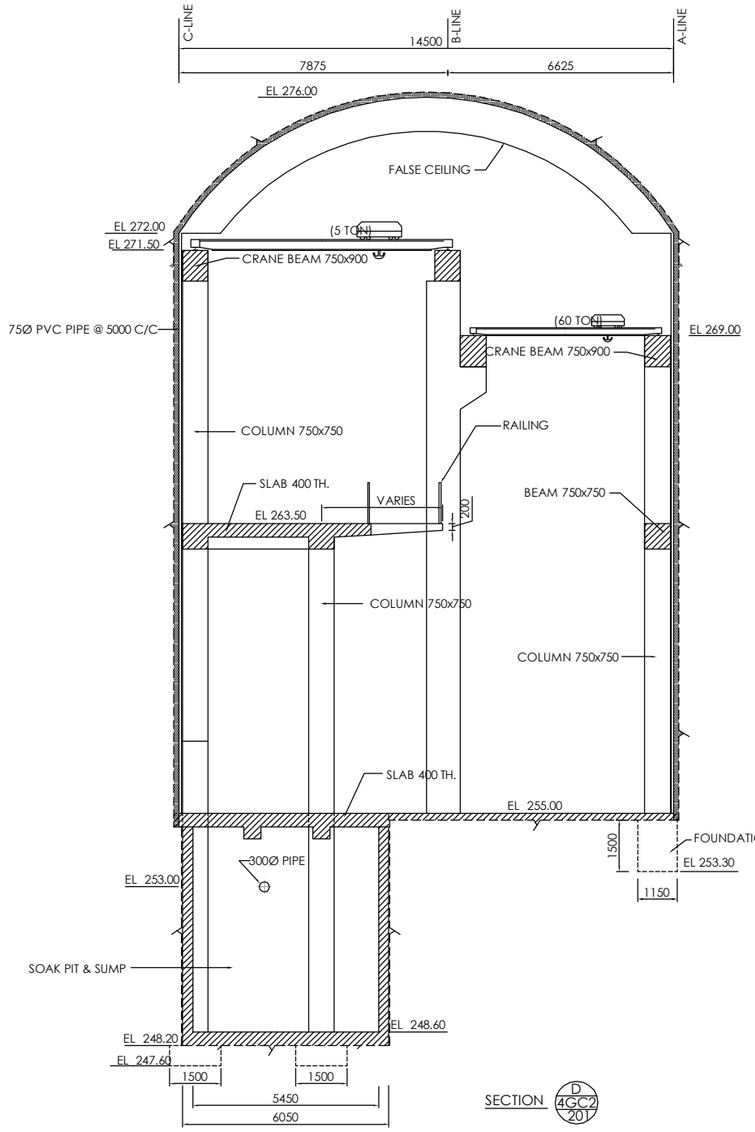

SECTION D 4GC2 201

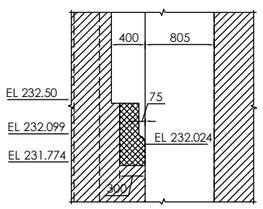

DETAIL 1

SCALE:-

0 0.5 1.0 1.5 2.0 2.5 M

SCALE:-

0 1.25 2.5 3.75 5.0 6.25 M.

rhLrk (p.k&VI) tyfo|qr if;j; "tuk

TEESTA (STAGE-VI) H.E. PROJECT

TRANSFORMER CAVERN

CROSS SECTIONS AND DETAILS

DATE	OCT, 2021	DRG. NO.	NHTS-VI	4GC2	4	GA	207	00

FORMAT OF NO DEVIATION CERTIFICATE
(To be submitted in the bidder's letter head)

REF: ……. **Dated**…….

BHARAT HEAVY ELECTRICALS LIMITED,
TRANSMISSION BUSINESS GROUP,
Plot No- 25, Sector- 16A, Noida,
Distt. Gautambudh Nagar, UP-201301

SUB.: Tender for "RECEIPT OF EQUIPMENT/MATERIAL AT SITE, UNLOADING, RECONCILIATION, INSPECTION, VERIFICATION, STORAGE, UP-KEEPING DURING STORAGE, ERECTION, TESTING, COMMISSIONING AND HANDING OVER OF 245KV GIS AND POTHEAD YARD, LTHPCL TEESTA-VI H. E. PROJECT IN SIKKIM".

TENDER NO.: - TBSM/TEESTA VI/ETC/TENDER/22-23 Date: 16.01.2023

Dear Sir,

With reference to above, this is to confirm that as per tender conditions, we have visited subject site before submission of our offer and noted the job content & site conditions etc.

We also confirm that we have not changed / modified the tender documents as appeared in the website and in case of observance at any stage, it shall be treated as null and void. We hereby confirm that we have not taken any deviation from tender clauses together with other references as enumerated in the above referred NIT and we hereby convey our unqualified acceptance to all terms and conditions as stipulated in the tender and NIT. In the event of observance of any deviation in any part of our offer at a later date whether implicit or explicit, the deviations shall stand null & void.

We confirm to have submitted offer strictly in accordance with tender instructions.

Thanking you,

Yours faithfully,

(Signature, date & seal of authorized representative of the bidder)

DECLARATION FOR RELATION IN BHEL

(To be typed and submitted in the Letter Head of the Company/Firm of Bidder failing which the offer of Bidder is liable to be summarily rejected)

Ref: **Date……..**

To,
AGM/TBSM
BHARAT HEAVY ELECTRICALS LIMITED,
TRANSMISSION BUSINESS GROUP,
PLOT NO.-25, SECTOR-16A,
NOIDA – 201301 (U.P.)

Dear Sir,

Sub: Declaration for relation in BHEL

Ref: 1) NIT/Tender Specification No…….., Date:-

I/We hereby submit the following information pertaining to relation/relatives of Proprietor/ Partner(s)/Director(s) employed in BHEL

Tick (√) any one as applicable:

1. The Proprietor, Partner(s), Director(s) of our Company/Firm DO NOT have any relation or relatives employed in BHEL

OR

2. The Proprietor, Partner(s), or Director(s) of our Company / Firm HAVE relation / relatives employed in BHEL and their particulars are as below:

a)

b)

Signature of the Authorized Signatory

Note:

1) Attach separate sheet, if necessary.
2) If BHEL Management comes to know at a later date that the information furnished by the Bidder is false, BHEL reserves the right to take suitable against the Bidder/ Contractor.

FORMATS FOR EPAYMENTS

To,

Sr.DGM (Finance)
Transmission Business Group
BHEL, TBG Finance,
Plot no. - 25, Sector - 16A
Noida - 201301; U.P.

Subject: E-Payments vide RTGS/NEFT

I/We request and authorise you to effect Epayment vide any of the above two modes to my/our bank account as per the details given below:

Vendor Name :

Title/Name of Account in the bank :

Account Type(Saving /current) :

Bank Account Number | | | | | | | | | | | | | | | | |

Name & address of Bank

Bank /Branch contact person's name :

Bank /Branch Tele Numbers with STD code :

Bank Branch MICR code | | | | | | | | |

(please enclose a copy of a cheque. This cheque should not be a payable at par cheque)

Bank Branch RTGS IFSC code | | | | | | | | | | |

Bank Branch NEFT IFSC code | | | | | | | | | | |

(you can obtain this from branch where you have your account)

Your Email address : **(not more than 20 character)**

Name of the Authorised Signatory : (Please mention here name of person from your organization signing this letter.)

Contact Person's name : (please mention here the name of a person in your company/organization)

I/We confirm that information provided above is correct & any consequences due to any mistake in above will be borne by us.

Thanking you

For
(Autorised Signatory)

We confirm that we are enabled for receiving RTGS/NEFT credits and we further confirm that the account number of (Please mention here name of the account holder), the signature of the authorised signatory and the MICR and IFSC Codes of our branch mentioned above are correct.

Bank's Verification
(Manager's/Officers signature under
bank Stamp)

Note:- Please attach cancelled original Cheque leaf.