एनटीपीसी NTPC	Project/ परियोजना : Lara II (2X800MW) Package/ पेकेज : EPC PACKAGE Supplier/ आपूर्तिकर्ता: Contract No./ अनुबंध सं.:	LIST OF ITEMS REQUIRING QUALITY PLAN AND SUB-SUPPLIER APPROVAL क्वालिटी प्लान तथा सब -वेंडर के अनुमोदन सहित मदों की सूची SUB-SYSTEM उप-प्रणाली: ELECTRICAL	Doc. No./ दस्तावेज सं.: REVISION NO : 00 DATE/ तिथि : 08.06.2022

S. N. क्र.सं	Item / मद	QP/ Insp. Cat. क्यूपी/ निरी. श्रेणी.	QP No. / क्यूपी. सं.	QP Sub. Schedule क्यूपी उप.अनुसूचि	Proposed sub-supplier/ प्रस्तावित उप आपूर्तिकर्ता	Place/ स्थान	Sub-suppliers approval status / category उप आपूर्तिकर्ता के अनुमोदन की स्थिति /श्रेणी	Sub-supplier Details sub sch/ उप आपूर्तिकर्ता के विवरण प्रस्तुतीकरण की सूची	Remarks/ टिप्पणी
					NGEF	BANGALORE	A		UPTO 15 KW
					BHARAT BIJLEE	MUMBAI	A		RQP, FOR FLAME PROOF ALSO
					KEC	BANGALORE/ HUBLI*	A		*UPTO 90KW, RQP, FOR FLAME PROOF ALSO
					MARATHON	KOLKATA	A		RQP (UPTO 690V & 600 KW) FOR FLAME PROOF ALSO
					ABB	SWEDEN	A		UPTO 55KW
					HAVELL	NEEMRANA	A		UP TO 90KW
					KAWAMATA	JAPAN	A		UP TO 75 KW
					TIPS	JAPAN	A		UP TO 45KW
36.1	~~DC Motor~~	CAT I							
					CGL	MANDIDEEP	A		
37	LT VFD Control Panel	CAT I							
					Powertech	Sonepat	A		Upto 55 KW with following conditions: i) VFD from Schneider- France, upto 415V, 50KW. ii) Enclosure & bought out items shall be from NTPC acceptable makes & iii) Engineering support for integration will be provided by Schneider/ Authorized integrator of Schneider
					DANFOSS	Oragadam	A		(upto 690V, 1200kW), VFD drives with VFD sourced from Danfoss-Denmark/USA and Panel sourced from Rittal
					YASAKAWA	Japan	A		VFD from Yasakawa- Japan, Upto 415V, 132KW
					ROCKWELL AUTOMATION	SAHIBABAD	A		VFD from Rockwell(Allen Bradley)- USA, (Upto 415 V, 600 KW)
					ABB	BANGALURU	A		VFD from ABB-Finland, Upto 690V, 750 KW
					SIEMENS	NASIK	A		VFD from SIEMENS- Germany, Upto 690V,900KW
					VACON	BANGALORE	A		VFD(NXP model) from VACON Finland, upto 400KW,415V and upto 900KW, 690V

एनटीपीसी NTPC		Project/ परियोजना : Lara II (2X800MW) Package/ पेकेज : EPC PACKAGE Supplier/ आपूर्तिकर्ता: Contract No./ अनुबंध सं.:				LIST OF ITEMS REQUIRING QUALITY PLAN AND SUB-SUPPLIER APPROVAL क्वालिटी प्लान तथा सब -वेंडर के अनुमोदन सहित मदों की सूची SUB-SYSTEM उप-प्रणाली: ELECTRICAL			Doc. No./ दस्तावेज सं.: REVISION NO : 00 DATE/ तिथि : 08.06.2022
S. N. क्र.सं	Item / मद	QP/ Insp. Cat. क्यूपी/ निरी. श्रेणी.	QP No. / क्यूपी. सं.	QP Sub. Schedule क्यूपी उप.अनुसूचि	Proposed sub-supplier/ प्रस्तावित उप आपूर्तिकर्ता	Place/ स्थान	Sub-suppliers approval status / category उप आपूर्तिकर्ता के अनुमोदन की स्थिति /श्रेणी	Sub-supplier Details sub sch/ उप आपूर्तिकर्ता के विवरण प्रस्तुतीकरण की सूची	Remarks/ टिप्पणी

NOTES:

Note - 1 : Vendors to submit project specific documents as per Sub-QR requirements in case the Vendor is approved under collaboration agreement.

Note - 2: Vendors under 'A' are approved and accepted by NTPC with/without conditions in the past. Similar conditions as the case may be for the vendor shall be applicable for this project and tied up in the quality plan.

Note - 3: Main contractor approved sub vendors are acceptable those are evaluated / assesesed as per Main contractor Quality Management System for vendor approval. Main contractor to inform the finaly selected vendor to NTPC as soon as PO is placed for these items. In case of sub-QR Note-1 is also applicable.

Note - 4 : BOI shall be reviewed and finalised during MQP approval for items/systems where ever applicable.

एनटीपीसी NTPC	Project/ परियोजना : Lara II (2X800MW) Package/ पैकेज : EPC PACKAGE Supplier/ आपूर्तिकर्ता: Contract No./ अनुबंध सं.:	LIST OF ITEMS REQUIRING QUALITY PLAN AND SUB-SUPPLIER APPROVAL क्वालिटी प्लान तथा सब -वेंडर के अनुमोदन सहित मदों की सूची SUB-SYSTEM उप-प्रणाली: ELECTRICAL	Doc. No./ दस्तावेज सं.: REVISION NO : 00 DATE/ तिथि : 08.06.2022

S. N. क्र.सं	Item / मद	QP/ Insp. Cat. क्यूपी/ निरी. श्रेणी.	QP No. / क्यूपी. सं.	QP Sub. Schedule क्यूपी उप.अनुसूचि	Proposed sub-supplier/ प्रस्तावित उप आपूर्तिकर्ता	Place/ स्थान	Sub-suppliers approval status / category उप आपूर्तिकर्ता के अनुमोदन की स्थिति /श्रेणी	Sub-supplier Details sub sch/ उप आपूर्तिकर्ता के विवरण प्रस्तुतीकरण की सूची	Remarks/ टिप्पणी

Note - 5: Category of inspection for LT Cables:

	For Total Contract Quantity per Size	*Category Of Inspection*
	For cable total quantity ≤ 2.5 KM	Cat-III - submission of TC & Certificate of Conformance by Main Contractor for the manufacturers having successfully supplied to any NTPC project-site through Corporate contracts for atleast 2 years
	For cable total quantity above 2.5 km & up to ≤ 10 km per size/type	Cat-II for the manufacturers having successfully supplied to any NTPC project-site through Corporate contracts for atleast 2 years
	For cable total quantity above 10 km per size/type	Cat-I

Note - 6: Category of inspection for Cable Trays & Cable Tray Flexible Support System:

	For Total Contract Quantity per Size	*Category of Inspection*
	For cable total quantity ≤ 2.5 KM	Cat-III - submission of TC & Certificate of Conformance by Main Contractor for the manufacturers having successfully supplied to any NTPC project-site through Corporate contracts for atleast 2 years
	For cable total quantity above 2.5 km & up to ≤ 10 km per size/type	Cat-II for the manufacturers having successfully supplied to any NTPC project-site through Corporate contracts for atleast 2 years
	For cable total quantity above 10 km per size/type	Cat-I

Note - 7:

i) For Motors less than 50 KW: CAT-III. Acceptance of Motor less than 50 KW is based on COC of the Manufacturer and the Main Contractor confirming as follows: "It is hereby confirmed that the above mentioned motor /motors was/ were manufactured taking care of NTPC specific requirements regarding ambient temp., voltage & frequency variation, hot starts, pull out torque, starting KVA/KW, temp. rise, distance between centre of stud & gland plate and tested in accordance with approved drawing /data sheets".

ii) For Motors 50 KW and less than 75 KW : CAT- II. Acceptance of Motor is based on NTPC review of Routine Test inspection report as per **IS: 12615** / applicable standards duly witnessed by main contractor along with COC of the Manufacturer and the Main Contractor confirming as follows: "It is hereby confirmed that the above mentioned motor /motors was/ were manufactured taking care of NTPC specific requirements regarding ambient temp., voltage & frequency variation, hot starts, pull out torque, starting KVA/KW, temp. rise, distance between centre of stud & gland plate, space heater and tested in accordance with approved drawing /data sheets".

iii) For Motors 75 KW & above : CAT- I . AS PER NTPC APPROVED QUALITY PLAN (To be submitted seperately for NTPC review & approval).

Note - 8:

NTPC approved Galvanizers:

	1. M/s M J Engg,Delhi	7. M/s National Galvanizer, Kolkata	13. M/s Gurpreet Galvanizer, Hyderabad	19. Unitech Fabricators & Galvanizers- Hoogly
	2. M/s A.V. Engg, Kolkata	8. M/s Unistar Galvanizer, Kolkata	14. M/s Sigma, Mumbai	
	3. M/s Inar Profiles, Vishakapatnam	9. M/s B.P. Project. Kolkata	15. M/s Radhakrishnan Shetty, Chennai	
	4. M/s Anand Udyog, Mumbai	10. M/s Bajaj Pune	16. Karamtara Mumbai	
	5. M/s Techno Engg,Chandigarh	11. M/s Electrocare Industries, Mumbai	17. Poona Galvanizers Pune	
	6. M/S Steelite Engg, Mumbai	12. M/s B.G. Shirke, Pune	18. Neha Galvanizer-Kolkata	

एनटीपीसी NTPC	Project/ परियोजना : Lara II (2X800MW) Package/ पेकेज : EPC PACKAGE Supplier/ आपूर्तिकर्ता: Contract No./ अनुबंध सं.:	LIST OF ITEMS REQUIRING QUALITY PLAN AND SUB-SUPPLIER APPROVAL क्वालिटी प्लान तथा सब -वेंडर के अनुमोदन सहित मदों की सूची SUB-SYSTEM उप-प्रणाली: ELECTRICAL	Doc. No./ दस्तावेज सं.: REVISION NO : 00 DATE/ तिथि : 08.06.2022

S. N. क्र.सं	Item / मद	QP/ Insp. Cat. क्यूपी/ निरी. श्रेणी.	QP No. / क्यूपी. सं.	QP Sub. Schedule क्यूपी उप.अनुसूचि	Proposed sub-supplier/ प्रस्तावित उप आपूर्तिकर्ता	Place/ स्थान	Sub-suppliers approval status / category उप आपूर्तिकर्ता के अनुमोदन की स्थिति /श्रेणी	Sub-supplier Details sub sch/ उप आपूर्तिकर्ता के विवरण प्रस्तुतीकरण की सूची	Remarks/ टिप्पणी

Note - 9: Relevant certificates shall be submitted for NTPC approval.Approval conditions attached to above identified vendors, as applicable shall be adhered to.

Note - 10 : Indigenous sub-vendors for Annexure-I items are acceptable subject to meeting the MLC (Minimum Local Content} in line with latest MOP order.

LEGENDS / संकेतिका

SYSTEM SUPPLIER/SUB-SUPPLIER APPROVAL STATUS CATEGORY /प्रणाली आपूर्तिकर्ता / सब -वेंडर की स्वीकृति की स्थिति की श्रेणी (SHALL BE FILLED BY NTPC एनटीपीसी द्वारा भरा जाएगा)

A – For these items proposed vendor is acceptable to NTPC. To be indicated with letter "A" in the list along with the condition of approval, if any./ इन मदों के लिए प्रस्तावित वेंडर एनटीपीसी को स्वीकार्य है। अनुमोदन की शर्त, , यदि कोई हो, के साथ-साथ पत्र "क" में इंगित किया जाए ।

DR – For these items "Detailed required" for NTPC review. To be identified with letter "DR" in the list. एनटीपीसी द्वारा इन मदों की समीक्षा के लिए "विस्तृत ब्यौरे की आवश्यकता" होगी। सूची में "DR" पत्र में इंगित किया जाना चाहिए।

QP/INSPN CATEGORY: क्यूपी / निरीक्षण की श्रेणी:

CAT-I / श्रेणी- I: For these items the Quality Plans are approved by NTPC and the final acceptance will be on physical inspection witness by NTPC. इन मदों के लिए गुणवत्ता योजनाओं को एनटीपीसी द्वारा अनुमोदित किया जाता है और एनटीपीसी द्वारा अंतिम स्वीकृति भौतिक निरीक्षण के दौरान उपलब्ध गवाह के आधार पर दी जाएगी।

CAT-II / श्रेणी- II: For these items the Quality Plans approved by NTPC. However no physical inspection shall be done by NTPC. The final acceptance by NTPC shall be on the basis review of documents as per approved QP. इन मदों के लिए गुणवत्ता योजनाओं को एनटीपीसी द्वारा अनुमोदित किया जाता है। हालाँकि एनटीपीसी द्वारा कोई भौतिक निरीक्षण नहीं किया जाएगा। एनटीपीसी द्वारा अंतिम स्वीकृति अनुमोदित क्यूपी के अनुसार दस्तावेजों की समीक्षा के आधार पर दी जाएगी।

CAT-III/ श्रेणी-III : For these items Quality control to be exercised as per Main contractor Quality Assurance System. The final acceptance by NTPC shall be on the basis of Certificate of Conformance (COC) by Main Contractor.

UNITS/WORKS इकाईयां / कार्य: Place of manufacturing/ निर्माण का स्थान Place of Main Supplier of multi units/works/बहु- इकाइयों / कार्यों के मुख्य सप्लाइर का स्थान.

: Control measure of item covered in quality plan of main item.

ANNEXURE-II

REFERENCE QUALITY PLANS

MANUFACTURER/BIDDER/ SUPPLIER NAME & ADDRESS	QUALITY PLAN		SPEC. NO : PE-TS-XXX-167-A001	DATE: XX.XX.XX
	CUSTOMER :		QP NO.: PE-QAP-XXX-167-A001(PI)	DATE: 11.02.2020
	PROJECT:		PO NO.: LATER	DATE: XX.XX.XX
	ITEM: PIPE FITTINGS ,FLANGES & ACCESSORIES	SYSTEM: MISC.TANKS (SITE FABRICATED)	SECTION:	SHEET 1 OF 1

SL NO.	COMPONENT & OPERATIONS	CHARACTERISTICS	CLASS	TYPE OF CHECK	QUANTUM OF CHECK		REFERENCE DOCUMENT	ACCEPTANCE NORMS	FORMAT OF RECORD	AGENCY			REMARKS
1	2	3	4	5	6		7	8	9	**			
					M	C/ N			*D	M	C	N	
1	Pipes Fittings, Flanges & Accessories	Check for Type, Model No., Tag No.,	MI	Visual	100%		As per Approved Data Sheet/ Tech spec.	As per Approved Data Sheet/ Tech spec.	Inspection Report	P	V	V	
2		Dimensions	MI	Dimensional	100%		As per Approved Data Sheet/ Tech spec.	As per Approved Data Sheet/ Tech spec.	Inspection Report	P	V	V	
3		Physical and chemical Properties	MI	Review of TC	For Lot		As per Approved Data Sheet/ Tech spec.	As per Approved Data Sheet/ Tech spec.	Mfgr. TC	P	V	V	
4		Hydro test	MA	Hydro Test	100%		As per Approved Data Sheet/ Tech spec.	As per Approved Data Sheet/ Tech spec.	Inspection Report	P	V	V	

NOTES:

1. BHEL reserves the right for conducting repeat test, if required.
2. Photographs of packing of material before final dispatch is to submitted.

LEGENDS:
*RECORDS, INDENTIFIED WITH "TICK"(√) SHALL BE ESSENTIALLY INCLUDED BY SUPPLIER IN QA DOCUMENTATION,
** **M**: SUPPLIER/ MANUFACTURER/ SUB-SUPPLIER, **C**: MAIN SUPPLIER/ BHEL/ THIRD PARTY INSPECTION AGENCY, **N**: CUSTOMER,
P: PERFORM, **W**: WITNESS, **V**: VERIFICATION, AS APPROPRIATE
MA: MAJOR, **MI**: MINOR, **CR**: CRITICAL

BHEL					
ENGINEERING			QUALITY		
	Sign & Date	Name		Sign & Date	Name
Prepared by:	11.2.2020	S. K. YADAV	Checked by:	11.02.2020	ASHISH PANIGRAHI
Reviewed by:	11.02.2020	SAYAN ROY	Reviewed by:	11/2/2020	R K JAISWAL

BIDDER/ SUPPLIER	
Sign & Date	
Seal	

FOR CUSTOMER REVIEW & APPROVAL			
Doc No:			
	Sign & Date	Name	Seal
Reviewed by:			
Approved by:			

207	MANUFACTURER/ BIDDER/ SUPPLIER NAME & ADDRESS	QUALITY PLAN		SPEC. NO : PE-TS-XXX-167-A001	DATE: XX.XX.XX
		CUSTOMER :		QP NO.: PE-QAP-XXX-167-A001(PL)	DATE: 11.02.2020
		PROJECT:		PO NO.: LATER	DATE: XX.XX.XX
		ITEM: MS PLATES	SYSTEM: MISC.TANKS (SITE FABRICATED)	SECTION:	SHEET 1 OF 1

SL NO.	COMPONENT & OPERATIONS	CHARACTERISTICS	CLASS	TYPE OF CHECK	QUANTUM OF CHECK		REFERENCE DOCUMENT	ACCEPTANCE NORMS	FORMAT OF RECORD		AGENCY			REMARKS
1	2	3	4	5	6		7	8	9	*				
					M	C/ N				D	M	C	N	
1.0 RAW MATERIAL														
1	STEEL PLATES	Chemical composition and Mechanical test	MA	Review of corelated MTC	one/heat		IS:2062	IS:2062	Mfgr. TC	√	P	V	V	Refer Note below
2		Visual and dimensional check	MA	Visual and measurement	100%		Mfg.TC	Mfg.TC IS1852	Mfgr. TC	√	P	** W	** W	
3		Identification/ marking	MA	Corelation establish	100%		As per manufacturing practice	As per manufacturing practice IS 2062	Mfgr. TC	√	P	V	** W	

LEGENDS:

*RECORDS, INDENTIFIED WITH "TICK"(√) SHALL BE ESSENTIALLY INCLUDED BY SUPPLIER IN QA DOCUMENTATION,

M: SUPPLIER/ MANUFACTURER/ SUB-SUPPLIER, **C**: MAIN SUPPLIER/ BHEL/ THIRD PARTY INSPECTION AGENCY, **N**: CUSTOMER,

P: PERFORM, **W**: WITNESS, **V:** VERIFICATION, AS APPROPRIATE

MA: MAJOR, **MI**: MINOR, **CR:** CRITICAL

** **NOTE:** i) In case material is dispatched directly from Approved sub-vendor plant/stockyard or procured from dealer against co related TC's witnessing by BHEL is waived off and material will be accepted based on MTC of approved sub vendor.

** ii) In case material is procured from dealer and co related TC's are not available, check on 100% quantity of plates will be performed on sample drawn from them at NABL certified/approved laboratory for chemical & physical properties, however dimensional check shall be witnessed by BHEL.

iii) BHEL reserves the right for conducting repeat test, if required.

iv) Photographs of packing of material before final dispatch is to submitted.

BHEL					
ENGINEERING			QUALITY		
	Sign & Date	Name		Sign & Date	Name
Prepared by:	11-2-2020	S. K. YADAV	Checked by:	11-2-2020	ASHISH PANIGRAHI
Reviewed by:	11.02.2020	SAYAN ROY	Reviewed by:	11/2/2020	R K JAISWAL

BIDDER/ SUPPLIER	
Sign & Date	
Seal	

FOR CUSTOMER REVIEW & APPROVAL			
Doc No:			
	Sign & Date	Name	Seal
Reviewed by:			
Approved by:			

बी एच ई एल BHEL	CONTRACTOR'S NAME & ADDRESS	MANUFACTURING QUALITY PLAN	PROJECT
		ITEM : RUBBER LINING OF PIPING CONFORMING TO Tech Spec.	Q.P.No:7374QPC01 REV-01
		BHEL Customer No. : 7374,7391& 7392	Dt- 13.02.2019
			PACKAGE
			CONTRACT No.:
			MAIN-SUPPLIER

S.No	COMPONENT & OPERATIONS	CHARACTRISTICS	CLASS	TYPE OF CHECK	QUANTUM OF CHECK M	REFERENCE DOCUMENT	ACCEPTANCE NORMS	FORMAT OF RECORDS	D*	AGENCY M	AGENCY C	AGENCY N	REMARKS
1	2	3	4	5	6	7	8	9	10	** 11			12
1.0	**RAW MATERIAL**												
1.1	Rubber Mix	a. Tensile Strength b. % Elongation c. Specific Gravity d. Hardness e. Thickness of Sheet	Major	Verfication	1 sample/lot	As per Tech Spec./Relevant IS , Material Spec.		TC	√	P	V	-	TC - Test Certificate
		f. Resistance to Bleeding #	Major	Chemical	1 sample/lot	Immersion for 24 hours @40 deg C in 10% of H2SO4 and 10% of HNO3	No discoloration and Weight change -0% +4%	TC	√	P	V	-	# TC shall be from NABL approved lab.
2.0	**INPROCESS INSPECTION**												
2.1	Surface Preparation	Cleanliness & Uniformity	Major	Visual	100%	IS 4682 Part I , Sa 2.5 Grade Surface Finish		TC	-	P	V	-	
2.2	Continuity of Lining at Uncured stage	Spark test	Major	Visual	100%	IS 4682 Part I		TC	-	P	V	-	
2.3	Curing of Rubber Lining	Control of Pressure,Temperature & Time	Major	Visual	100%	IS 4682 Part I and Manufacturer's Procedure		Log Book	-	P	V	-	
3.0	**FINAL INSPECTION**												
3.1	Complete Lining	a. Surface Defects	Major	Visual	100%	IS 4682 Part I		IR	√	P	W	-	
		b. Shore Hardness	Major	Measurement	Random	IS 4682 Part I		IR	√	P	W	-	
		c. Spark Test	Critical	Visual	100%	IS 4682 Part I		IR	√	P	W	-	
		d. Rubber lining Thickness	Major	Measurement	Random	IS 4682 Part I		IR	√	P	W	-	
		e. Adhesion Test	Critical	Peel-Off test	One sample per Vulc. Lot	IS 4682 Part I		IR	√	P	W	-	
4.0	**Documentation**	Review of Reports	Major	Verification	100%	All reports required as per QP.				P	V	-	

LEGEND:

* RECORDS, INDENTIFIED WITH "TICK" (√) SHALL BE ESSENTIALLY INCLUDED BY SUPPLIER IN QA DOCUMENTATION.
** M:MANUFACTURER/SUB-SUPPLIER,C: BHEL/BHEL AUTHORISED AGENCY, N: NTPC, P: PERFORM W: WITNESS AND V: VERIFICATION
CHP: NTPC SHALL IDENTIFY IN COLOUM 'N' AS 'W'

PREPARED BY	APPROVED BY	FOR NTPC USE:	REVIEWED BY	APPROVED BY	APPROVAL SEAL
MAIN-SUPPLIER					
SIGNATURE	PAGE 01 OF 02				

DOC.NO. 6130-109-RVM-R-012 Rev 01 CAT...

बी एच ई एल BHEL	CONTRACTOR'S NAME & ADDRESS	**MANUFACTURING QUALITY PLAN** **ITEM : RUBBER LINING OF PIPING CONFORMING TO IS 4682 PART I.** **BHEL Customer No. : 7374,7391& 7392**	Q.P.No:7374QPC01 REV-01 Dt- 13.02.2019	PROJECT : PACKAGE CONTRACT No.: MAIN-SUPPLIER

S.No	COMPONENT & OPERATIONS	CHARACTRISTICS	CLASS	TYPE OF CHECK	QUANTUM OF CHECK	REFERENCE DOCUMENT	ACCEPTANCE NORMS	FORMAT OF RECORDS	D*	AGENCY			REMARKS
					M					M	C	N	
1	2	3	4	5	6	7	8	9	10	** 11			12

NOTES:

1. **Rubber Lining Vendor's Name & Address

a. M/s Lebracs Rubber Linings Private Limited ; Works Address : No16, Sedrapet, Puducherry-605111

b. M/s Jasmino Polymertech Pvt Ltd ; Works Address : L-61, MIDC Industrial Area, Taloja, Dist-Raigad, Maharashtra -410208

2. NTPC Inspection Category : Cat III
3. Repair, if any, should be carried out by same as per original rubber.
4. Adhesion test coupon shall be as prepared as per governing code.
5. NTPC Surveillance check may be carried out, if required.

		LEGEND: * RECORDS, INDENTIFIED WITH "TICK" (✓) SHALL BE ESSENTIALLY INCLUDED BY SUPPLIER IN QA DOCUMENTATION. ** M: MANUFACTURER/SUB-SUPPLIER, C: BHEL / BHEL AUTHORISED AGENCY, N: NTPC, P: PERFORM W: WITNESS AND V: VERIFICATION		DOC.NO. 6130-09-RVM-R-012 REV01.		CAT...
PREPARED BY	APPROVED BY					
MAIN-SUPPLIER						
SIGNATURE	PAGE 02 OF 02		FOR NTPC USE:	REVIEWED BY	APPROVED BY	APPROVAL SEAL

-Above quality plan is tentative. Final QAP shall be decided during detailed engineering.

NTPC	SYSTEM EQUIPMENT Misc. Tanks	STANDARD FIELD QUALITY PLAN CONFORMING TO CODE: IS:803-1976	QP NO.: 0000-999-QOM – I -001 Rev. No 0 Date 15-02-2005 Page 1 Of 1 VALID UPTO : 14-02-2008

REVIEWED BY: APPROVED BY

अनुमोदित APPROVED

अनिल गुप्ता
ANIL GUPTA
अपर महाप्रबंधक (गुणवत्ता आश्वासन)
Addl. General Manager (QA)
एन टी पी सी लि./NTPC LTD.

SL. NO	ACTIVITY AND OPERATION	CHARACTERISTICS / INSTRUMENTS	CLASS # OF CHECK	TYPE OF CHECK	QUANTUM OF CHECK	REFERENCE DOCUMENT	ACCEPTANCE NORMS	FORMAT OF RECORD	D *	REMARKS
1.	2.	3.	4.	5.	6.	7.	8.	9.		10.
1	**RAW MATERIAL INSPECTION**									
1.1	MS Plates	Mechanical & Chemical	B	Mechanical & Chemical	1 sample per Heat	Appd Drg./ Data Sheet	Relevant Material Specs	TC		In absence of Correlated TCs, Check Testing shall be witnessed by NTPC.
		Surface Defects	B	Visual	100%	No Pitting/ Corrosion	Damaged Plates not to be used	IR		
		Thickness	B	Measure	100%	Appd Drg.	Appd Drg.	IR		
2	**IN PROCESS INSPECTION**									
2.1	Welding	WPS/PQR/WQR	A	Qualification / Verification	100%	ASME Sec-IX	ASME Sec-IX	WPS/ PQR		See Note # 1.
		Marking, Cutting, Rolling, Joint Set-up	C	Visual & Measure	100%	Appd Drg.	Appd Drg.	IR		
		NDT on Back Gauging	B	DPT	100%	ASTM E-165	No Indications	IR		Except for Bottom Plates.
		NDT on Root Run	B	DPT	100%	ASTM E-165	No Indications	IR		For Bottom Plates only.
		NDT on Finished Welds	A	Vacuum Testing	100%	IS:803	No Leakage	IR		For Bottom Plates only.
3	**FINAL INSPECTION**									
3.1	Finished Tank	Finish, Orientation	B	Visual	100%	IS:803 & Appd. Drg.	IS:803 & Appd. Drg.	IR		
		Dimensions including Verticality, Ovality	B	Visual & Measure	100%	IS:803 & Appd. Drg.	IS:803 & Appd. Drg.	IR		
		NDT on Final Welding	A	DPT	100%	ASTM E-165	No Indications	IR		Except for Bottom Plates. See Note # 2.
		Leak Proof ness	A	Water Fill Test	100%	IS:803 & Appd. Drg.	No Leakage	IR		For 24 Hours
3.2	Painting	Surface Preparation	B	Visual	100%	IS:803, Appd. Drg., NTPC Specs	IS:803, Appd. Drg., NTPC Specs	IR		
		Coating Thickness, Colour	B	Visual & DFT	100%	IS:803, Appd. Drg., NTPC Specs	IS:803, Appd. Drg., NTPC Specs	IR		

Note : - 1. Only Qualified Welders are to be used. If Welders qualified by NTPC/ BHEL/ LRQA/ BVQI are available & continuously doing the job, then re-qualification is not necessary.
2. NDT on Finished weld shall also include Spot RT (10%), if Joint efficiency is taken as 0.85, in line with requirements of Code.

LEGEND: * RECORDS, INDENTIFIED WITH "TICK" (√) SHALL BE ESSENTIALLY INCLUDED BY SUPPLIER IN QA DOCUMENTATION.
LEGEND TO BE USED: CLASS #: A = CRITICAL, B = MAJOR, C = MINOR; 'A' SHALL BE WITNESSED BY NTPC FQA, **'B'** SHALL BE WITNESSED BY NTPC ERECTION/ CONSTRUCTION DEPTT AND **'C'** SHALL BE WITNESSED BY MAIN SUPPLIER (A & B CHECK SHALL BE NTPC CHP STAGE)

Ranipet	MANUFACTURER'S NAME AND ADDRESS M/S BHEL: BAP: RANIPET 632 406 TAMIL NADU	**STANDARD QUALITY PLAN** ITEM: AGITATOR SYSTEM: FGD	QP NO: FGS: 720 REV. NO: 00 DATE: 12.02.2019 PAGE NO: Page 1 of 2

SL. NO	COMPONENT & OPERATIONS	CHARACTERISTICS	CLASS	TYPE OF CHECK	QUANTUM OF CHECK		REFERENCE DOCUMENT	ACCEPTANCE NORMS	FORMAT OF RECORD		AGENCY			REMARKS
					M	B					M	C	N	
1.	2.	3.	4.	5.	6.		7.	8.	9.	D *	** 10.			11.
1.0	**Raw Material Inspection**													
1.1	All materials including casting & forgings	Chem. & Mech. Dimensions Surface Defects	MA MA MA	Review of MTC Measurement Visual	1/Heat 100% 100%	1/Heat - -	As per spec. & Appd. Dwg		TC IR IR	√	P P P	V - -	V - -	
2.0	**Motor : Review Of Manufacture Test Certificate**													
3.0	**In Process Inspection**													
3.1	Welding Qualifications	WPS & PQR	MA	WPS, PQR & WPQ	100%		ASME Sec IX		IR	√	P	V	V	Recent qualified WPS, PQR and WPQ shall be submitted for review during inspection
3.2	Marking, Cutting, Edge Preparation Tacking	Dimensions	MA	Measurement	100%	-	Appd.Dwg.		IR		P	-	-	
3.3	Welds	Dimensions & Surface Quality	MA	Measurement	100%		Appd.Dwg.& ASME Sec VIII		IR	√	P	W	V	
3.4	Machining of Components	Dimensions Surface Defects	MA	Measurement Visual	100% 100%	- -	Appd. Dwg.		IR		P P	- -	- -	
3.5	Impeller	Static balance test	MA	Measurement	100%		As per Specs.		TR	√	P	V	V	
3.6	Rubber Lining	Hardness test & Spark test	MA	Measurement	100%		As per Specs.	Appd. Drg	TR	√	P	W	V	
3.7	Assembly	Dimensions Completeness	MA	Measurement Visual	100% 100%		Appd.Drg.		IR	√	P P	V V	V V	
4.0	**Final Inspection**													
4.1	Final Assembly	Overall Dimensions & Completeness	MA MA	Measurement Visual	100%	10%	Appd. Dwg		IR	√	P	W	V	*10% pf each type (Vertical /

LEGEND: * RECORD, IDENTIFIED WITH "TICK" (√) UNDER COLUMN 'D' SHALL BE SUBMITTED TO CUSTOMER AS A QA DOCUMENTATION PACKAGE.
M: MANUFACTURER / SUB SUPPLIER, **C:** MAIN CONTRACTOR.
N: CUSTOMER/CONSULTANT **P:** PERFORM **W:** WITNESS **V:** REVIEW OF RECORDS
MA: MAJOR AND **MI:** MINOR

PREPARED BY	REVIEWD & APPROVED BY
Rakesh Kumar Madhu,(SEr/QA)	K C Gandhi Parimalam,(DGM/QA)

Agitator inspection requirement-Please note that attached QP is indicative only. Stage inspection and Quantum of check may vary during final approval by customer (NTPC).

Ranipet	MANUFACTURER'S NAME AND ADDRESS **M/S BHEL: BAP: RANIPET 632 406 TAMIL NADU**	**STANDARD QUALITY PLAN** **ITEM: AGITATOR** **SYSTEM: FGD**	**QP NO**	**FGS: 720**
			REV. NO:	**00**
			DATE:	**12.02.2019**
			PAGE NO:	**Page 2 of 2**

SL. NO	COMPONENT & OPERATIONS	CHARACTERISTICS	CLASS	TYPE OF CHECK	QUANTUM OF CHECK		REFERENCE DOCUMENT	ACCEPTANCE NORMS	FORMAT OF RECORD		AGENCY			REMARKS
					M	B					M	C	N	
1.	2.	3.	4.	5.	6.		7.	8.	9.	D *	** 10.			11.
														Horizontal
4.2	Free Air Run Test of complete assembly	Measurement Current, RPM, Noise & Vibration	MA	Measurement	100%	10%	Vendor Standard / Approved Drawing / Data Sheet		IR	√	P	W	W	
4.3	Review of QA Documents	Verification of QA Documents	MA	Verification	100%	100%	As per Appd. MQP		IR		P	V	V	
5.0	**Painting & Preservation**													
5.1		Painting Material	MI	Review of MTC	100%		Appd. "Painting Procedure"/Approved Painting Schedule		IR	√	P	V	-	
5.2		Surface treatment and inspection	MI	Visual	100%	-	-do-		IR	√	P	-	-	
5.3		DFT Check	MI	Measurement	10%		-do-		IR	√	P	V	-	
5.4		Painting Surface Quality	MI	Visual	100%		-do-		IR	√	P	V	-	
6.0	**Inspection before Delivery**													
6.1	Packing	Size, appearance & firmness	MI	Measurement & Visual	100%		As per "Packing Procedure"		IR	√	P	V	-	
6.2	Deliver Documents	Markings, Packing List & Details Packing List, etc., Check	MI	Verification	100%		As per "Packing Procedure"		IR	√	P	V	-	

NOTES:

1. For Agitator Motor rating is 45KW and motor make NTPC/BHEL Approved source.
2. Routine test report duly witnessed by main contractor as per applicable standard shall be reviewed during inspection (more than 30 KW Rating).

LEGEND: * RECORD, IDENTIFIED WITH "TICK" (√) UNDER COLUMN 'D' SHALL BE SUBMITTED TO CUSTOMER AS A QA DOCUMENTATION PACKAGE. **M:** MANUFACTURER / SUB SUPPLIER, **C:** MAIN CONTRACTOR. **N:** CUSTOMER/CONSULTANT **P:** PERFORM **W:** WITNESS **V:** REVIEW OF RECORDS **MA:** MAJOR AND **MI:** MINOR	**PREPARED BY** **Rakesh Kumar Madhu,(SEr/QA)**	**REVIEWD & APPROVED BY** **K C Gandhi Parimalam,(DGM/QA)**

QUALITY REQUIREMENT

(a) Since this items comes under Sub-QR Category, hence inspection at vendor works is applicable by BHEL/BHEL TPI and NTPC as per NTPC Approved Quality plan.

(b) Supplier shall submit the MQP in NTPC Format (Sample QP attached herewith) for approval of NTPC. Please note that attached QP is indicative and minimum requirement only. Stage inspection and Quantum of check may vary during final approval by customer (NTPC).

(c) Painting : Painting details in the specification are minimum requirement. Painting shall be as per approved schedule which will be submitted by successful bidder during detail engg.

(d) In case of order placed on foreign vendors, vendor has to finalize Inspection agency at their own cost and carry out inspection as per the approved Quality plan . Further, the list of third party insection agencies (as applicable) shall be provided by BHEL during detail engineering.Vendor has to furnish BHEL the inspection reports and other documents required as per approved Quality plan duly signed by the Inspection Agency after their witness for BHEL's review and acceptance.

ANNEXURE-III

TANK SCHEDULE

TANK SCHEDULE (Signed and Stamped copy to be sumbmitted with the offer by Bidder)

Sl.no.	Description	Primary Hydrocyclone feed tank	Filtrate water tank	Secondary Hydrocyclone feed tank	Waste water Tank	Limestone Slurry Storage tank	Auxiliary Absorbent Tank	Process Water tanks	Belt filter wash tank	Cake wash(clarified water) tank	Condensate Storage Tanks	DM water storage Tanks	Absorber Area Drain Pit	Gypsum Area Drain Pit	Limestone Area Drain Pit
1	**Tank Sl No.**	1	2	3	4	5	6	7	8	9	10	11	12	13	14
2	**Type of agitator**	Vertical Type – (Center Mounted)	Vertical Type – (Center Mounted)	Vertical Type – (Center Mounted)	Vertical Type – (Center Mounted)	Vertical Type – (Center Mounted)	Marine Propeller – Horizontal Type (Side Entry),	Not applicable	Not applicable	Not applicable	Not applicable	Not applicable	Vertical Type – (Center Mounted)	Vertical Type – (Center Mounted)	Vertical Type – (Center Mounted)
3	**Medium to be handled**	Gypsum slurry	Gypsum slurry	Gypsum slurry	Gypsum slurry	Limestone slurry	Gypsum slurry	Process Water	Process Water	Process Water	Condensate	DM water	Gypsum slurry	Gypsum slurry	Limestone slurry
4	**Agitator Location**	Outdoor	Outdoor	Outdoor	Outdoor	Outdoor	Outdoor	Not applicable	Not applicable	Not applicable	Not applicable	Not applicable	Outdoor	Outdoor	Outdoor
5	**Agitator Operation**	Continuous	Continuous	Continuous	Continuous	Continuous	Whenever FGD is under maintenance	Not applicable	Not applicable	Not applicable	Not applicable	Not applicable	Continuous	Continuous	Continuous
6	**Tank details**														
a)	Tank Shape	Vertical cylindrical	Vertical cylindrical	Vertical cylindrical	Vertical cylindrical	Vertical cylindrical	Vertical cylindrical	Vertical cylindrical	Vertical cylindrical	Vertical cylindrical	Vertical cylindrical	Vertical cylindrical	Rectangular (RCC sump)	Rectangular (RCC sump)	Rectangular (RCC sump)
b)	Tank Material	**IS:2062 E250 GR.BR**	**IS:2062 E250 GR.BR**	**IS:2062 E250 GR.BR**	**IS:2062 E250 GR.BR**	**IS:2062 E250 GR.BR**	**IS:2062 E250 GR.BR**	**IS:2062 E250 GR.BR**	**IS:2062 E250 GR.BR**	**IS:2062 E250 GR.BR**	**IS:2062 E250 GR.BR**	**IS:2062 E250 GR.BR**	**RCC (refer note-1)**	**RCC (refer note-1)**	**RCC (refer note-1)**
c)	Tank name	Primary Hydrocyclone feed tank	Filtrate water tank	Secondary Hydrocyclone feed tank	Waste water Tank	Limestone Slurry Storage tank	Auxiliary Absorbent Tank	Process water tanks	Belt filter wash tank	Cake wash(clarified water) tank	Coondensate Storage tanks	DM Water storage Tanks	Absorber Area Drain Pit	Gypsum Area Drain Pits	Limestone Area Drain Pits
d)	Tank/Sump Quantity (in No.)	1	1	1	1	2	1	2	2	2	2	2	2	1	1
	Capacity of Tank (in m3)														
e)	Capacity (Hold Volume)	205.0	104.0	125.0	216.0	1582.0	1658.0	124.0	32.0	32.0	514.0	2633.0	56.0	56.0	56.0
f)	Capacity (Effective)	153.0	72.0	88.0	176.0	1406.0	1628.0	86.0	16.0	16.0	450.0	2450.0	27	27	27
	Dimension (in m)														
g)	Diameter	**REFER GA DRWGS OF TANKS UNDER ANNEXURE-V, SUB-SECTION-D, SECTION -I OF SPECIFICATION**											-	-	-
h)	Length												4	4	4
i)	Breadth												4	4	4
j)	Height												4	4	4
7	**Quantity of Agitator per tank**	1	1	1	1	1	3	Not applicable	Not applicable	Not applicable	Not applicable	Not applicable	1	1	1
8	**Total quantity of Agitators (for two units)**	1	1	1	1	2	3	Not applicable	Not applicable	Not applicable	Not applicable	Not applicable	2	1	1
9	**Agitator Loads**														
a)	Static Load (per agitator assembly) (in kg) (Refer Note-6)	1444	451	563	1444	7367	1000 for each Agitator	Not applicable	Not applicable	Not applicable	Not applicable	Not applicable	0.5	0.5	0.5
b)	Dynamic load (per agitator assembly) (in kg)(Refer Note-6)	3610	1128	1408	3610	18418	2000 for each Agitator	Not applicable	Not applicable	Not applicable	Not applicable	Not applicable	1	1	1
10	**Tentative Nozzle size for Agitator (in NB) (Refer Note-7)**	500	400	400	500	800	450	-	-	-	-	-	-	-	-
11	**Slurry Analysis**														
a)	Slurry to be handled	Gypsum slurry	Gypsum slurry	Gypsum slurry	Gypsum slurry	Limestone slurry	Gypsum slurry	Water	Water	Water	Condensate	DM watre	Gypsum slurry	Gypsum slurry	Gypsum slurry
b)	Maximum solid particle size	200 mesh (75 µ)	6-7 mm	200 mesh (75 µ)	200 mesh (75 µ)	200 mesh (75 µ)	200 mesh (75 µ)	-	-	-	-	-	6-7 mm	6-7 mm	6-7 mm
c)	Normal solid particle size, d50	325 mesh (43 µ)	325 mesh (43 µ)	325 mesh (43 µ)	325 mesh (43 µ)	325 mesh (43 µ)	325 mesh (43 µ)	-	-	-	-	-	325 mesh (43 µ)	325 mesh (43 µ)	325 mesh (43 µ)
d)	Solid to be handled	gypsum along with Limestone & other impurities	gypsum along with Limestone & other impurities	gypsum along with Limestone & other impurities	gypsum along with Limestone & other impurities	Limestone + impurities	gypsum along with Limestone & other impurities	-	-	-	-	-	gypsum along with Limestone & other impurities	gypsum along with Limestone & other impurities	gypsum along with Limestone & other impurities
e)	Chloride concentration	max 25000 ppm	max 25000 ppm	max 25000 ppm	max 25000 ppm	max 1000 ppm	max 25000 ppm	-	-	-	-	-	max 25000 ppm	max 25000 ppm	max 25000 ppm
f)	Hardness of particle	5-7 mho scale	5-7 mho scale	5-7 mho scale	5-7 mho scale	5-7 mho scale	5-7 mho scale	-	-	-	-	-	5-7 mho scale	5-7 mho scale	5-7 mho scale
g)	Slurry concentration, wt%	30 wt%	11%	16.60%	3%	30 wt%	30%	-	-	-	-	-	30%	30%	30%
h)	Sp. Gravity of slurry	1.212	1.066	1.108	1.02	1.215	1.212	-	-	-	-	-	1.212	1.212	1.212
i)	Sp. Gravity of Lime Stone & Gypsum	2.32(avg)	2.32(avg)	2.32(avg)	2.32(avg)	2.32(avg)	2.32(avg)	-	-	-	-	-	2.32(avg)	2.32(avg)	2.32(avg)
j)	Viscosity of Slurry	10 cP	4 cP	4 cP	3 cP	30 cP	10 cP	-	-	-	-	-	10 cP	10 cP	10 cP
k)	pH	4 to 8	4 to 8	4 to 8	4 to 8	5 to 8	4 to 8	-	-	-	-	-	4 to 8	4 to 8	4 to 8
l)	SiO_2 Content	4 to 6 g/l	4 to 6 g/l	4 to 6 g/l	4 to 6 g/l	4 to 6 g/l	4 to 6 g/l	-	-	-	-	-	4 to 6 g/l	4 to 6 g/l	4 to 6 g/l

m)	Temperature	Normal -62 deg C; Design-70 deg C.	Normal -58deg C; Design-70 deg C.	Normal -62 deg C; Design-70 deg C.	Normal -62 deg C; Design-70 deg C.	Normal -45 deg C; Design-55deg C.	Normal -62 deg C; Design-70 deg C.	-	-	-	-	-	Normal -62 deg C; Design-70 deg C.	Normal -62 deg C; Design-70 deg C.	Normal -62 deg C; Design-70 deg C.
12	**Process water Analysis**														
a)	Calcium as CaCO3 (mg/l)	-	-	-	-	-	-	256	256	256	-	-	-	-	-
b)	Magnesium as CaCO3 (mg/l)	-	-	-	-	-	-	70	70	70	-	-	-	-	-
c)	Sodium + Potassium as CaCO3 (mg/l)	-	-	-	-	-	-	125	125	125	-	-	-	-	-
d)	Total Cations as CaCO3 (mg/l)	-	-	-	-	-	-	451	451	451	-	-	-	-	-
e)	Chlorides as CaCO3 (mg/l)	-	-	-	-	-	-	75	75	75	-	-	-	-	-
f)	Sulphate as CaCO3 (mg/l)	-	-	-	-	-	-	197.5	197.5	197.5	-	-	-	-	-
g)	Nitrate as CaCO3 (mg/l)	-	-	-	-	-	-	0	0	0	-	-	-	-	-
i)	Total Anions as CaCO3 (mg/l)	-	-	-	-	-	-	451	451	451	-	-	-	-	-
j)	Iron(total) as Fe (mg/l)	-	-	-	-	-	-	1.5	1.5	1.5	-	-	-	-	-
k)	Total Silica as SiO2 (mg/l)	-	-	-	-	-	-	55	55	55	-	-	-	-	-
l)	pH	-	-	-	-	-	-	7.8-8.2	7.8-8.2	7.8-8.2	-	-	-	-	-
m)	Turbidity (NTU)	-	-	-	-	-	-	100	100	100	-	-	-	-	-
13	**Inside Lining of tank/sumps**														
a)	Lining specification / Painting specification of interior surface	Chlorobutyl/Bromobutyl rubber lining with Shore A hardness as 55±5 and min5 mm thickness .	Vinyl ester-based Glass Flake lining of min 3 mm thickness.			Chlorobutyl/Bromobutyl rubber lining with Shore A hardness as 55±5 and min5 mm thickness .		Epoxy lining of minimum 150 micron thickness (3 coats of 50 micron each)			**Refer painting Specification in GA drwg. Addionally, PVC balls in 3 layers shall be provided above water suface inside DM Water tanks.**		Vinyl ester-based Glass Flake lining of min 3 mm thickness.		
14	**Size and Number of Anchor Bolts per tank**	REFER GA DRWGS OF TANKS UNDER ANNEXURE-V, SUB-SECTION-D, SECTION -I OF SPECIFICATION											-	-	-
15	**Mateial Specification**	For material of construction for Plates, Structure, Pipes, Fitings, Flanges, Gasket, Anchor bolts amd Fasteners, refer Annexure-IX, Sub Section-D, Section-I.													
16	**Nozzles required on tanks**	REFER GA DRWGS OF TANKS UNDER ANNEXURE-V, SUB-SECTION-D, SECTION -I OF SPECIFICATION													

Notes	
1	**Supply, E&C of the agitators for the slurry tanks shall be in bidder's scope.**
2	**Steel plates (Only for Roof, Bottom, Baffles and Shell of Tank) shall be provided as free issue by BHEL.**
3	**The absorber area Drain Pit, Gypsum area Drain Pit & Limestone area Drain Pit (all of RCC construction) are exluded from bidder scope of work. However, the supply, erection and commissioning of the Glass flake lining within the pit shall be in bidder's scope. Further the supply & erection of the agitators within the mentioned pits shall be in bidder's scope of work.**
4	**For detailed scope of work refer the technical specification.**
5	**The outside surface of the tanks shall be coated with paint as approved by the BHEL/Customer.**
6	**Agitator loads provided at S.N.9 are indicative and for ease of tendering & estimation. The details furnished by the OEM shall be considered as final.**
7	**The Nozzle sizes provided for Agitators at S.N. 10 are indicative and for ease of tendering & estimation. The details furnished by the OEM shall be considered as final.**
8	**The distance between bottom of Main beam of Agitator Bridge and Tank Roof shall be minimum 1000 mm for all slurry tanks. Further, details will be decided during detailed engineering.**

ANNEXURE-IV

MASTER DRAWINGS LIST WITH SCHEDULE OF SUBMISSION

DRAWINGS/ DOCUMENTS REQUIRED DURING DETAIL ENGINEERING

The successful bidder shall submit the following drawings / documents during detail engineering for approval / information / reference (as the case may be): -

Sl. No.	BHEL Drawing / Document No.	Title	Schedule Submission Date from LOI	Resubmission after incorporating comments	Drawing Classification
1	PE-V0-508-167-A001	DESIGN CALCULATION OF PRIMARY HYDRO CYCLONE FEED TANK INCLUDING STAAD CALCULATION & FEA ANALYSIS	3 weeks	Within 1 week	Primary
2	PE-V0-508-167-A002	DESIGN CALCULATION OF FILTERATE WATER TANK INCLUDING STAAD CALCULATION & FEA ANALYSIS	3 weeks	Within 1 week	Primary
3	PE-V0-508-167-A003	DESIGN CALCULATION OF SECONDARY HYDRO CYCLONE FEED TANK INCLUDING STAAD CALCULATION & FEA ANALYSIS	3 weeks	Within 1 week	Primary
4	PE-V0-508-167-A004	DESIGN CALCULATION OF WASTE WATER TANK INCLUDING STAAD CALCULATION & FEA ANALYSIS	3 weeks	Within 1 week	Primary
5	PE-V0-508-167-A005	DESIGN CALCULATION OF LIMESTONE SLURRY STORAGE TANKS INCLUDING STAAD CALCULATION & FEA ANALYSIS	3 weeks	Within 1 week	Primary
6	PE-V0-508-167-A006	DESIGN CALCULATION OF AUXILIARY ABSORBENT TANK INCLUDING STAAD CALCULATION & FEA ANALYSIS	3 weeks	Within 1 week	Primary
7	PE-V0-508-167-A007	DESIGN CALCULATION OF PROCESS WATER TANKS INCLUDING STAAD CALCULATION OF ROOF STRUCTURE	3 weeks	Within 1 week	Primary
8	PE-V0-508-167-A008	DESIGN CALCULATION OF BELT FILTER WASH TANKS INCLUDING STAAD CALCULATION OF ROOF STRUCTURE	3 weeks	Within 1 week	Primary
9	PE-V0-508-167-A009	DESIGN CALCULATION OF CAKE WASH (CLARIFIED WATER) TANK INCLUDING STAAD CALCULATION OF ROOF STRUCTURE	3 weeks	Within 1 week	Primary
10	PE-V0-508-167-A010	DESIGN CALCULATION OF CST (CONDENSATE STORAGE TANKS) INCLUDING STAAD CALCULATION OF ROOF STRUCTURE	3 weeks	Within 1 week	Primary

11	PE-V0-508-167-A011	DESIGN CALCULATION OF DM WATER TANKS INCLUDING STAAD CALCULATION OF ROOF STRUCTURE	3 weeks	Within 1 week	Primary
12	PE-V0-508-167-A101	GA DRAWING OF PRIMARY HYDRO CYCLONE FEED TANK	4 weeks	Within 1 week	Primary
13	PE-V0-508-167-A102	GA DRAWING OF FILTERATE WATER TANK	4 weeks	Within 1 week	Primary
14	PE-V0-508-167-A103	GA DRAWING OF SECONDARY HYDRO CYCLONE FEED TANK	4 weeks	Within 1 week	Primary
15	PE-V0-508-167-A104	GA DRAWING OF WASTE WATER TANK	4 weeks	Within 1 week	Primary
16	PE-V0-508-167-A105	GA DRAWING OF LIMESTONE SLURRY STORAGE TANKS	4 weeks	Within 1 week	Primary
17	PE-V0-508-167-A106	GA DRAWING OF AUXILIARY ABSORBENT TANK	4 weeks	Within 1 week	Primary
18	PE-V0-508-167-A107	GA DRAWING OF PROCESS WATER TANKS	4 weeks	Within 1 week	Primary
19	PE-V0-508-167-A108	GA DRAWING OF BELT FILTER WASH TANKS	4 weeks	Within 1 week	Primary
20	PE-V0-508-167-A109	GA DRAWING OF CAKE WASH (CLARIFIED WATER) TANK	4 weeks	Within 1 week	Primary
21	PE-V0-508-167-A110	GA DRAWING OF CST	4 weeks	Within 1 week	Primary
22	PE-V0-508-167-A111	GA DRAWING OF DM WATER STORAGE TANKS	4 weeks	Within 1 week	Primary
23	PE-V0-508-167-A110	GA DRAWING OF DRAIN PIT (TYP) FOR ABSORBER AREA, GYPSUM AREA AND LIMESTONE AREA	4 weeks	Within 1 week	Secondary
24	PE-V0-508-167-A201	DATASHEET & GA DRAWING OF RUBBER LINING FOR MISC. FGD TANKS	6 weeks	Within 1 week	Secondary
25	PE-V0-508-167-A202	DATASHEET & GA DRAWING OF GLASS FLAKE LINING FOR MISC. FGD TANKS	6 weeks	Within 1 week	Secondary
26	PE-V0-508-167-A203	DATASHEET FOR PIPES, FITTINGS, PLATES & STRUCTURE FOR MISC. FGD TANKS	6 weeks	Within 1 week	Secondary

27	PE-V0-508-167-A204	SURFACE PREPARATION AND RUBBER LINING PROCEDURES FOR MISC. FGD TANKS	7 weeks	Within 1 week	Secondary
28	PE-V0-508-167-A205	SURFACE PREPARATION AND GLASS FLAKE LINING PROCEDURES FOR MISC. FGD TANKS	7 weeks	Within 1 week	Secondary
29	PE-V0-508-167-A301	QAP OF RUBBER LINING FOR MISC. FGD TANKS	6 weeks	Within 1 week	Primary
30	PE-V0-508-167-A302	QAP OF GLASS FLAKE LINING FOR MISC. FGD TANKS	6 weeks	Within 1 week	Primary
31	PE-V0-508-167-A303	QAP/CHECKLIST OF PIPES, FITTINGS, PLATES & STRUCTURE FOR MISC. FGD TANKS	6 weeks	Within 1 week	Secondary
32	PE-V0-508-167-A304	SUB VENDOR LIST WITH INSPECTION CATEGORY FOR MISC. FGD TANKS	3 weeks	Within 1 week	Primary
33	PE-V0-508-167-A401	FABRICATION DRAWINGS OF PRIMARY HYDRO CYCLONE FEED TANK	5 weeks	Within 1 week	Secondary
34	PE-V0-508-167-A402	FABRICATION DRAWINGS OF FILTERATE WATER TANK	5 weeks	Within 1 week	Secondary
35	PE-V0-508-167-A403	FABRICATION DRAWINGS OF SECONDARY HYDRO CYCLONE FEED TANK	5 weeks	Within 1 week	Secondary
36	PE-V0-508-167-A404	FABRICATION DRAWINGS OF WASTE WATER TANK	5 weeks	Within 1 week	Secondary
37	PE-V0-508-167-A405	FABRICATION DRAWINGS OF LIMESTONE SLURRY STORAGE TANKS	5 weeks	Within 1 week	Secondary
38	PE-V0-508-167-A406	FABRICATION DRAWINGS OF AUXILIARY ABSORBENT TANK	5 weeks	Within 1 week	Secondary
39	PE-V0-508-167-A407	FABRICATION DRAWINGS OF PROCESS WATER TANKS	5 weeks	Within 1 week	Secondary
40	PE-V0-508-167-A408	FABRICATION DRAWINGS OF BELT FILTER WASH TANKS	5 weeks	Within 1 week	Secondary
41	PE-V0-508-167-A409	FABRICATION DRAWINGS OF CAKE WASH (CLARIFIED WATER) TANK	5 weeks	Within 1 week	Secondary
42	PE-V0-508-167-A410	FABRICATION DRAWINGS OF CST	5 weeks	Within 1 week	Secondary

43	PE-V0-508-167-A411	FABRICATION DRAWINGS OF DM WATER TANKS	5 weeks	Within 1 week	Secondary
44	PE-V0-508-167-A501	O&M MANUAL FOR RUBBER LINING OF MISC. FGD TANKS	8 weeks	Within 1 week	Secondary
45	PE-V0-508-167-A502	O&M MANUAL FOR GLASS FLAKE LINING OF MISC. FGD TANKS	8 weeks	Within 1 week	Secondary
46	PE-V0-508-167-A503	O&M MANUAL FOR MISC. FGD TANKS	8 weeks	Within 1 week	Secondary
47	PE-V0-508-571-A001	GA DRAWING, EXPLODED VIEW, SECTIONAL VIEW WITH MATERIAL OF CONSTRUCTION, MECHANICAL SEAL, GEARBOX FOR ALL AGITATOR MODELS	2 weeks	Within 1 week	Primary
48	PE-V0-508-571-A002	DATA SHEET FOR ALL AGITATOR	2 weeks	Within 1 week	Primary
49	PE-V0-508-571-A003	AGITATOR PERFORMANCE CURVE OF ALL AGITATORS	2 weeks	Within 1 week	Primary
50	PE-V0-508-571-A004	ELECTRICAL MOTOR GA DRAWING & DATA SHEET AND PERFORMANCE CURVES OF ALL MOTORS	2 weeks	Within 1 week	Primary
51	PE-V0-508-571-A005	QUALITY PLAN & INSPECTION AND TEST PROCEDURE	2 weeks	Within 1 week	Primary
52	PE-V0-508-571-A006	AGITATOR AND MOTOR SIZING CALCULATION	2 weeks	Within 1 week	Primary
53	PE-V0-508-571-A007	O&M MANUAL FOR AGITATOR	4 weeks	Within 1 week	Secondary
54	PE-V0-508-571-A008	UTILITY CONSUMPTION	4 weeks	Within 1 week	Secondary
55	PE-V0-508-571-A009	FOUNDATION DATA INCLUDING ANCHOR PLAN	4 weeks	Within 1 week	Secondary
56	PE-V0-508-571-A010	LUBRICATING OIL LIST	4 weeks	Within 1 week	Secondary
57	PE-V0-508-571-A011	SPECIAL TOOLS LIST, START-UP & COMMISSIONING SPARES	4 weeks	Within 1 week	Secondary
58	PE-V0-508-571-	INSTALLATION AND ASSEMBLY PROCEDURE INCLUDING PRE-	4 weeks	Within 1 week	Secondary

	A012	COMMISSIONING CHECK LIST			

NOTE:

1. Bidder to note that BHEL reserves the right for drawing/document submission through web based Document Management System. Bidder would be provided access to the DMS for drawing/document approval and adequate training for the same. Detailed methodology would be finalized during the kick-off meeting. Bidder to ensure following at their end.
   - Internet explorer version – Minimum Internet Explorer 7.
   - Internet speed – 2 mbps (Minimum preferred).
   - Pop ups from our external DMS IP (124.124.36.198) should not be blocked.
   - Vendor's internal proxy setting should not block DMS application's link (http://dmsserver.bhelpem.com/Wrench%20Web%20Access/Login.aspx.).
2. Any other drwgs/docs indicated else where in the specification shall be submitted by vendor for approval of BHEL/customer.

COMPANY SEAL

SIGNATURE: _____

NAME : _____

DESIGNATION: _____

COMPANY: _____

DATE: _____

ANNEXURE-V

GA DRAWINGS OF MISC. FGD TANKS

DESIGN PARAMETERS

GOVERNING STANDARD: API-650	DESIGN INTERNAL PRESSURE: 0.62 kPa	METAL TEMPERATURE: MIN. DESIGN TEMP.: 15 °C DESIGN TEMP.: 55 °C	C.A. SHELL: 1.5 mm	RADIOGRAPH: SPOT PER CODE	
EDITION: 13TH EDITION	DESIGN EXTERNAL PRESSURE: 0.25 kPa	JOINT EFFICIENCY: SHELL: 0.85 ROOF: 0.85 BOTTOM: 0.85	C.A. BOTTOM: 1.5 mm	ANCHORAGE: YES	
APPENDIX(ICS): A, E, F	SPECIFIC GRAVITY: 1067	BOTTOM SEAMS: BW	C.A. ROOF: 1.5 mm	WINDGIRDER: NONE	
CAPACITY TO TOP OF SHELL: 118 m^3	WIND: E= C I= 1 V= 169.49 km/h	FIXED ROOF SEAMS: BW	C.A. STRUCTURE: 1.5 mm	WORKING CAPACITY: 104 m^3	
DESIGN LIQUID LEVEL: 5.3 m	SEISMIC: SUG= 2 SC= D Av= 0.2763 TL= 4 Sp= 0.16	FLOATING ROOF SEAMS: --	NET WORKING CAPACITY: 80 m^3	DESIGN BY: PK	DATE 30-Aug-2024
MAX OPERATING TEMPERATURE: 45 °C	ALLOWABLE STRESS: 145 MPa	SHELL SEAMS DBW		CHECK BY: SR	DATE 30-Aug-2024

TANK WEIGHTS:
WEIGHT OF TANK, EMPTY : 11806 KG
WEIGHT OF TANK WITH FULL OF PRODUCT (SG = 1.067) : 125639 KG
SEISMIC MOMENT (RING-WALL) : 449000 N-M
SEISMIC MOMENT (SLAB) : 568000 N-M
WIND MOMENT : 135380 N-M
SEISMIC BASE SHEAR : 23920 N/M

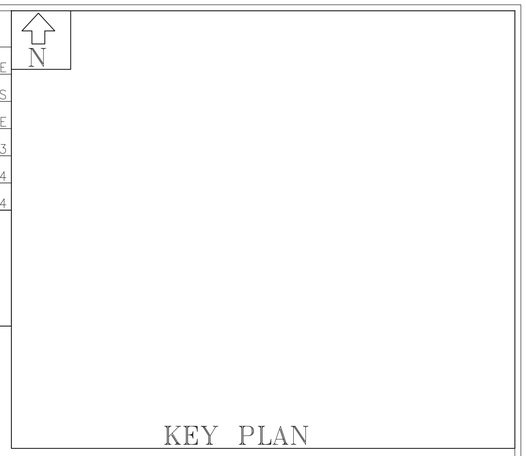

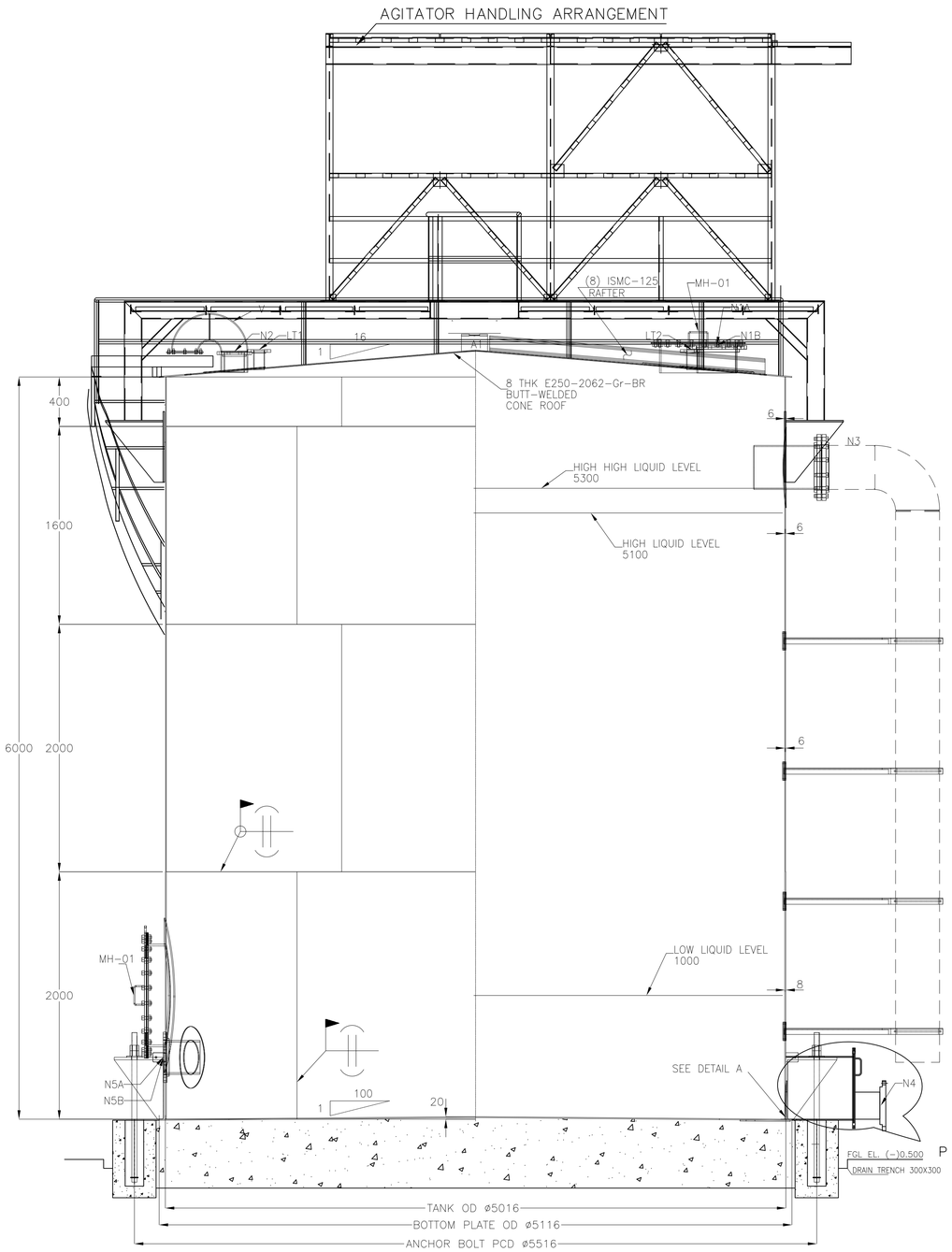

ELEVATION VIEW

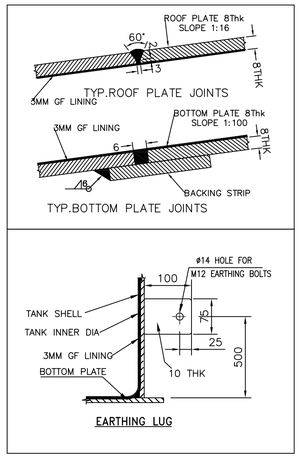

NOTES:
1. ALL DIMENSIONS ARE IN MM. ELEVATIONS ARE IN METER UNLESS OTHERWISE SPECIFIED.
2. ELEVATION 0.00 IS THE GROUND FLOOR LEVEL FOR POWER HOUSE BUILDING WHICH CORRESPONDS TO RL (+)209.50M.
4. NOZZLE PROJECTIONS ARE MEASURED FROM TANK SHELL INNER TO FLANGE FACE AS APPLICABLE.
5. ALL REINFORCEMENT PADS SHALL BE PROVIDED WITH 6MM TELLTALE HOLE.
6. ALL BOLT HOLES SHALL BE STRADDLE VERTICAL CENTERLINES ON SHELL AND RADIAL CENTERLINES ON ROOF.
7. ALL PROTRUSIONS, SHARP EDGES AND SPATTER ETC. SHALL BE REMOVED FROM THE SURFACE AND ALL WELDS GROUND SMOOTH WITHOUT ANY CAVITES AND IMPERFECTION BEFORE LINING.
8. LINING SHALL BE CARRIED OUT AFTER HYDRO TEST.
9. ALL LONGITUDINAL WELDS SHALL BE STAGGERED.
10. BOTTOM PLATE SHALL UNIFORMLY REST ON FOUNDATION.
11. THE MINIMUM SIZE OF THE WELD SHALL BE EQUAL TO THE THICKNESS OF THINNER MEMBER JOINT UNLESS SPECIFIED OTHERWISE.
12. GROUNDING LUGS SHALL BE WELDED TO THE TANK BODY AT SITE TO SUIT SITE REQUIREMENT.
13. PAINTING SHALL BE AS PER APPROVED PAINTING SCHEDULE.
14. PAD PLATES SHALL BE PROVIDED ON THE TANK FOR SUPPORTING PIPES AND CABLE TRAYS.
15. ALL JOINTS OF BOTTOM PLATES ARE BUTT WELDED WITH BACKING STRIP.
16. ALL JOINTS OF ROOF PLATES ARE BUTT WELDED.
17. ALL JOINTS OF SHELL PLATES ARE DOUBLE WELDED BUTT JOINTS.
18. THREE PLATES JOINT SHALL NOT BE CLOSER THAN 300MM FROM EACH OTHER.
19. ALL FILLET WELDS SHALL BE 6MM UNLESS OTHERWISE SPECIFIED.
20. ALL HANDRAILS, FLAT AND TOE PLATE OF THE STAIRCASE SHALL BE BEND TO SUIT OUTSIDE RADIUS OF TANK DIAMETER.
22. GRATING SHALL BE HOT DIP GALVANIZED IN ACCORDANCE WITH IS: 2629 AND TESTED AS PER IS: 2633 AND 6745. QUANTITY OF ZINC COATING SHALL BE MIM 900 GM/ M2 OF SURFACE AREA (0.12MM UNIFORM THK)
23. EVERY CROSS BAR AND MAIN MEMBER SHALL BE WELDED WITH END FLATS.
24. ALL WELDING TO BE COMPLETED BEFORE STARTING THE GF LINING.
25. RAFTERS TO BE WELDED ON THE TOP OF ROOF FOR ENABLING GF LINING INSIDE ROOF SURFACE.

PAINTING SPECIFICATION

DESCRIPTION	INTERNAL	EXTERNAL	Underneath
SURFACE PREPARATION	BLAST CLEANING TO SA 2.5(NEAR WHITE METAL WITH SURFACE PROFILE 35-50µM		WIRE BRUSH CLEANING
PRIMER	TWO COAT OF Red Oxide Zinc Phosphate Primer to IS: 12744 DFT- 30µ. EACH	Primer coat shall consist of epoxy resin based zinc phosphate primer having minimum DFT of 100 microns.	2 Coats of High Build Coal Tar Epoxy suitably Pigmented, DFT:80-100 microns each Coat.
INTERMEDATE COAT	NA	Intermediate coat (or under coat) shall consist of epoxy resin based paint pigmented with Titanium dioxide with minimum DFT of 100 microns.	
FINAL COAT	VINYL ESTER BASED GLASS FLAKE LINING IF MIN THICKNESS 3 MM	Top coat shall consist of one coat of epoxy paint suitable pigmented of approved shade and colour with glossy finish and DFT of 75 microns. Additionally finishing coat of polyurethane of minimum DFT of 25 microns shall be provided.	
TOTAL DFT	60	300	160-200

REFERENCE DRAWINGS:-
1. PROCESS P&I DIAGRAM OF PRIMARY HYDRO CYCLONE FEED TANK : 9587-001-109-PVM-F-020
2. PLOT PLAN : 9587-001-301-POC-F-001

All the requirement shown under GA drwg are bar minimum, any other item found applicable during detailed engineering as per Technical Specification / Design Calculation/ Functional Requirement , shall be supplied by bidder without any commercial implication to BHEL.

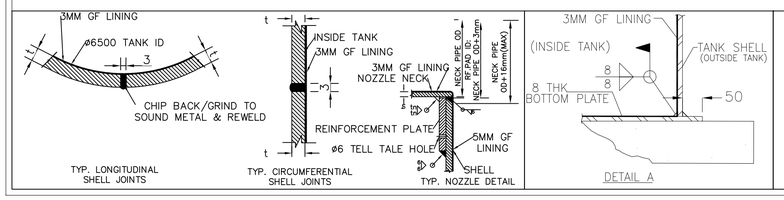

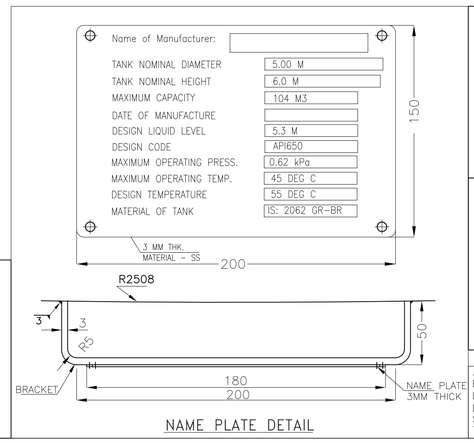

NAME PLATE DETAIL

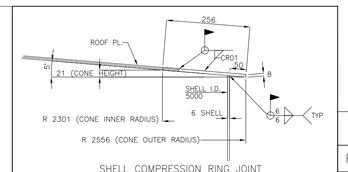

SHELL COMPRESSION RING JOINT

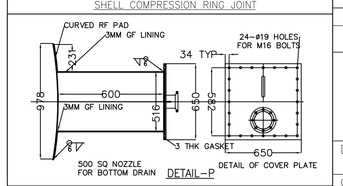

ALL THE REQUIREMENTS SHOWN UNDER GA DRAWING ARE BARE MINIMUM, ANY OTHER ITEM FOUND APPLICABLE DURING DETAILED ENGINEERING AS PER TECHNICAL SPECIFICATION/ DESIGN CALCULATION/ FUNCTIONAL REQUIREMENT SHALL BE SUPPLIED BY BIDDER WITHOUT ANY COMMERCIAL IMPLICATION TO BHEL.

REV	DESCRIPTION	BY	DATE	APPROVED
0				

REVISIONS

NTPC DRG No.	9587-109-PVM-B-143
PS-PEM	OWNER: NTPC LIMITED LARA SUPER THERMAL POWER PROJECT STAGE-II (2x800MW)
DRAWN/DATE PK/09-09-2024	GENERAL ARRANGEMENT AND LOAD DATA OF FILTRATE WATER TANK
CHECKED/DATE PK/09-09-2024	
APPROVED/DATE SR/09-09-2024	JOB NO. 508 / DWG NO. PE-DG-508-167-A102 / REV. 0
SCALE: N.T.S	SH. 1 OF 3

THE INFORMATION ON THIS DOCUMENT IS THE PROPERTY OF BHARAT HEAVY ELECTRICALS LIMITED. IT MUST NOT BE USED DIRECTLY OR INDIRECTLY IN ANY WAY DETRIMENTAL TO THE INTEREST OF THE COMPANY.

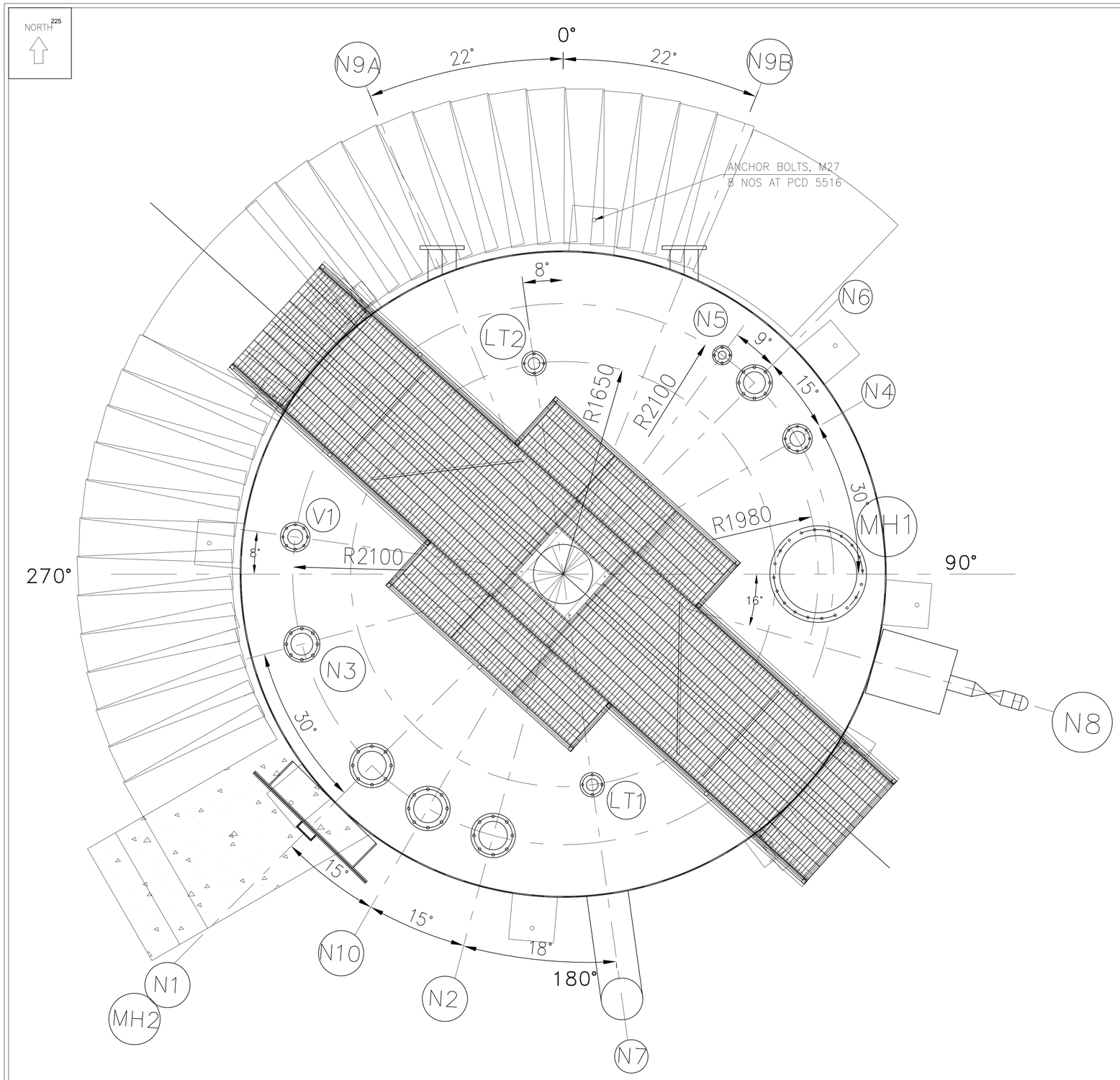

TANK PLAN VIEW

ROOF APPURTENANCE

DESCRIPTION	CUSTOM MARK	FLANGE TYPE, RATING	NOZZLE THICKNESS	SIZE	OUTSIDE PROJECTION	HORZ. RADIUS FROM CENTER OF TANK ROOF	ORIENTATION FROM TANK NORTH (0°)
AGITATOR NOZZLE	A1	150# F.F. S.O.	6.35	400NB	150	--	132°
LEVEL TRANSMITTER-1	LT1	150# F.F. S.O.	4.8	80NB	150	1650	172°
LEVEL TRANSMITTER-2	LT2	150# F.F. S.O.	4.8	80NB	150	1650	352°
FILTRATE FROM VACUUM RECEIVER A	N1	150# F.F. S.O.	6.35	300NB	150	2100	225°
FILTRATE FROM VACUUM RECEIVER B	N10	150# F.F. S.O.	6.35	300NB	150	2100	215°
FILTER WATER FROM VACUUM BELT FILTER A&B	N2	150# F.F. S.O.	5.4	150NB	150	2100	195°
GYPSUM SLURRY FROM SHC-A&B	N3	150# F.F. S.O.	5.4	150NB	150	2100	255°
GYPSUM AREA DRAIN TO TANK	N4	150# F.F. S.O.	5.4	100NB	150	2100	60°
FROM WASTE WATER PUMP TO TANK	N5	150# F.F. S.O.	4.8	80NB	150	2100	36°
FILTRATE WATER FROM ABSORBER	N6	150# F.F. S.O.	5.4	150NB	150	2100	45°
VENT WITH BIRD SCREEN	V1	150# F.F. S.O.	5.4	100NB	150	1650	278°
ROOF MANHOLE	MH1	AS PER API 650	6.0	600NB	150	1980	90°

SHELL APPURTENANCE

DESCRIPTION	CUSTOM MARK	FLANGE TYPE, RATING	NOZZLE THICKNESS	SIZE	OUTSIDE PROJECTION	ELEVATION FROM BOTTOM PLATE	ORIENTATION FROM TANK NORTH (0°)
TANK OVERFLOW	N7	150# F.F. S.O.	12.70	350NB	250	4700	172°
TANK DRAIN	N8	150# F.F. S.O.	8.56	125NB	175	300	106°
PUMP SUCTION OUTLET	N9A	150# F.F. S.O.	12.70	250NB	225	400	22°
PUMP SUCTION OUTLET	N9B	150# F.F. S.O.	12.70	250NB	225	400	22°
SHELL MANHOLE	MH2	AS PER API 650	8.0	900NB	300	900	225°
BAFFLE WALL	BAFFLE-01	--	--	--	--	0	2°
BAFFLE WALL	BAFFLE-02	--	--	--	--	0	92°
BAFFLE WALL	BAFFLE-03	--	--	--	--	0	182°
BAFFLE WALL	BAFFLE-04	--	--	--	--	0	272°

NOTES:

1.- ELEVATIONS SHOWN FROM TOP OF TANK BOTTOM AT THE LOCATION OF THE APPURTENANCE.

MATERIAL SPECIFICATION

ITEM	MATERIAL
PLATES FOR SHELL, BOTTOM & ROOF	IS: 2062 GR. E250 BR
NOZZLE	50NB TO 150NB - IS:1239 ERW, 150NB AND ABOVE - IS: 3589 GR.410 ERW
MANHOLE	IS: 2062 GR. E250 BR
NOZZLE FLANGES	IS:2062 GR.E250 BR SOFF ASME B16.5 CL.150 FOR 25NB TO 600NB IS:2062 GR.E250 BR SOFF AWWA-C207 CL.D FOR 650NB TO 1800NB
HAND RAILING	IS: 1239 (MEDIUM GRADE), GALVANIZED AS PER IS: 4736
GASKETS	BUTYL RUBBER
BOLTING (NUTS & BOLTS)	SA 193 GR.B7 & SA 194 GR.2H
STRUCTURALS	IS: 2062 GR.A/B
FITTINGS	25NB TO 50NB - SA 105, SW, 65 NB TO 500NB - SA 234 WPB ASME-B16.9 (BW)
TREADS & PLATFORM GRATING	IS:2062 GR-A (GRATINGS SHALL BE ELECTRO FORGED TYPES. MINIMUM THICKNESS OF THE GRATING SHALL BE 32 MM. THE OPENING SIZE SHALL NOT BE MORE THAN 30MMX100MM. ALL GRATING SHALL BE HOT DIP GALVANIZED AT THE RATE OF 610 G PER SQ. M. AFTER SURFACE PREPARATION BY MEANS OF BLAST CLEANING/ ACID PICKLING.)
RF PAD PLATE & GUSSETS	IS: 2062 GR. E250 BR
EARTHING LUG	IS: 2062 GR. E250 BR
ANCHOR BOLT	IS: 2062 GR. E250 A
INSIDE LINING	3MM THICK VINYL ESTER BASED GLASS FLAKE LINING

REV	DESCRIPTION	BY	DATE	APPROVED
0				

REVISIONS

NTPC DRG No. 9587-109-PVM-B-143

भारत हेवी इलेक्ट्रिकल्स लिमिटेड
BHEL
PS-PEM

OWNER: NTPC LIMITED
LARA SUPER THERMAL POWER PROJECT
STAGE-II (2x800MW)

GENERAL ARRANGEMENT AND LOAD DATA OF FILTRATE WATER TANK

DRAWN/DATE PK/09-09-2024
CHECKED/DATE PK/09-09-2024
APPROVED/DATE SR/09-09-2024

JOB NO. 508
DWG NO. PE-DG-508-167-A102
REV. 0

SCALE: N.T.S

THE INFORMATION ON THIS DOCUMENT IS THE PROPERTY OF BHARAT HEAVY ELECTRICALS LIMITED. IT MUST NOT BE USED DIRECTLY OR INDIRECTLY IN ANY WAY DETRIMENTAL TO THE INTEREST OF THE COMPANY.

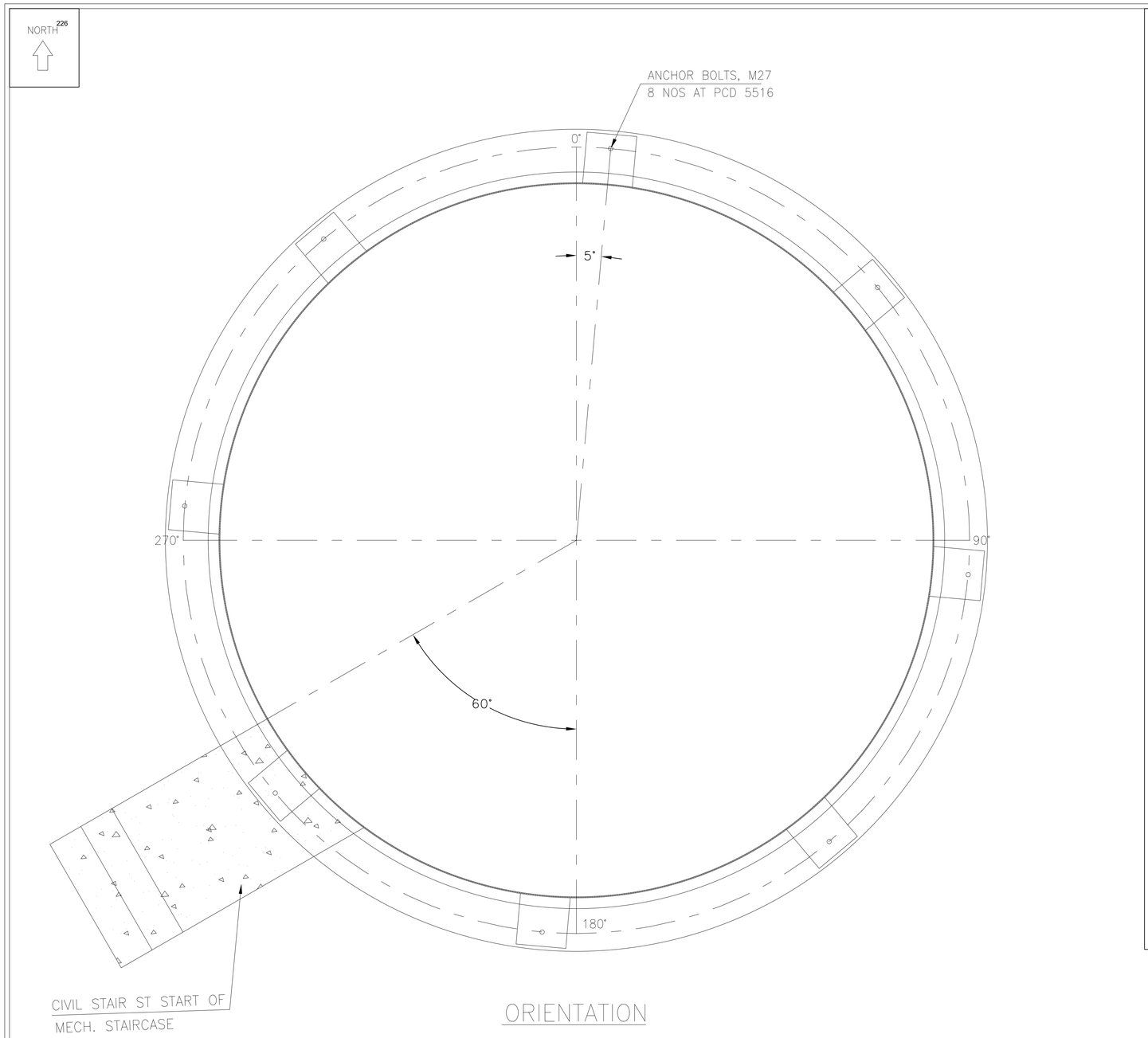

ORIENTATION

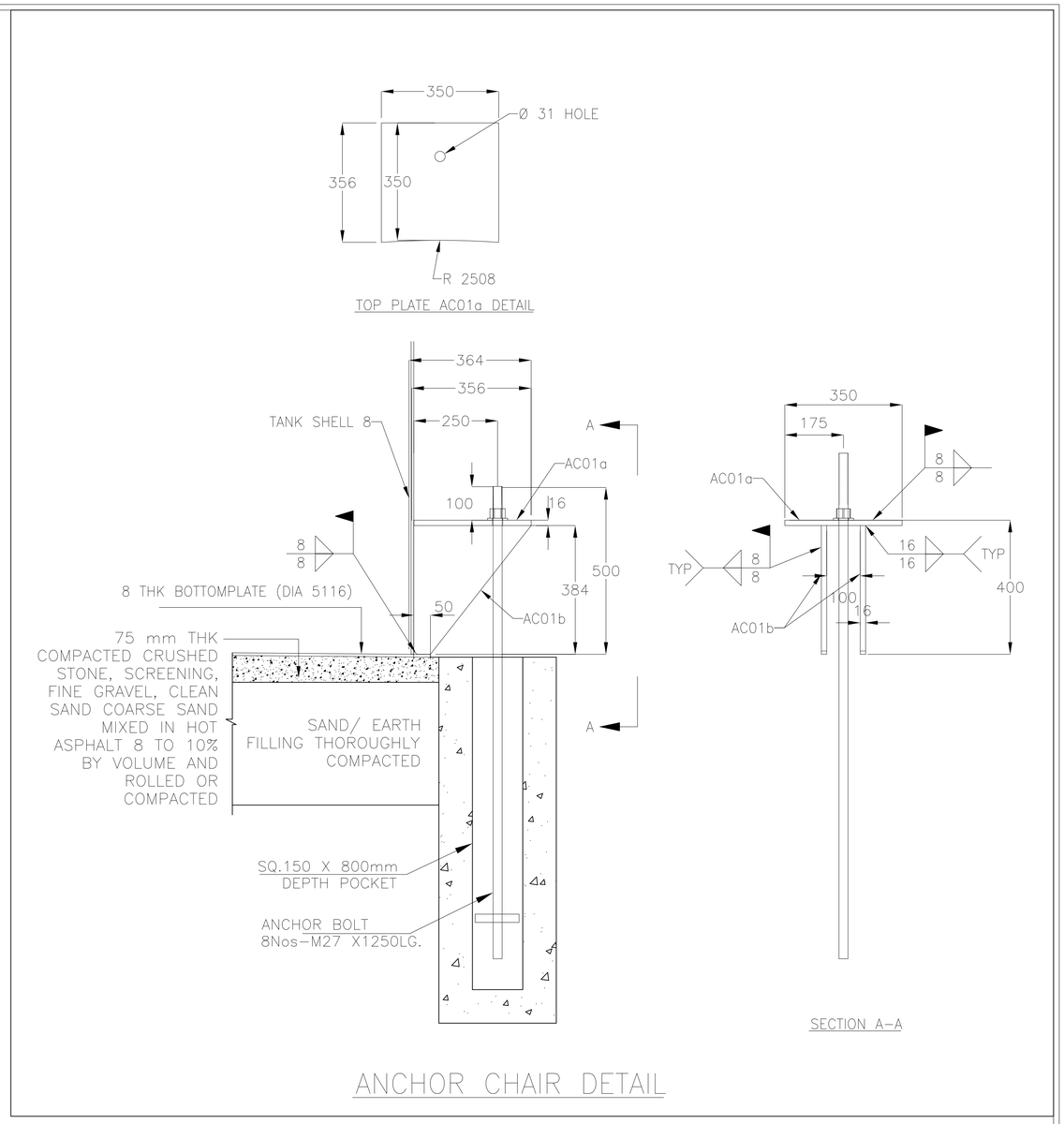

ANCHOR CHAIR DETAIL

BASED ON SHELL OD.

ANCHOR CHAIR	
ANGLE	ARC
5°	219
50°	2189
95°	4158
140°	6128
185°	8098
230°	10068
275°	12038
320°	14007

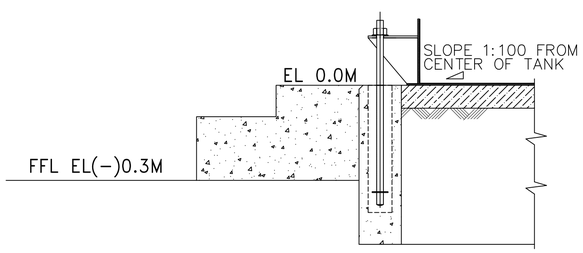

CIVIL STAIRCASE

REV	DESCRIPTION	BY	DATE	APPROVED
0				

REVISIONS

NTPC DRG No.	9587-109-PVM-B-143
PS-PEM	OWNER: NTPC LIMITED LARA SUPER THERMAL POWER PROJECT STAGE-II (2x800MW)
DRAWN/DATE PK/09-09-2024	GENERAL ARRANGEMENT AND LOAD DATA OF FILTRATE WATER TANK
CHECKED/DATE PK/09-09-2024	
APPROVED/DATE SR/09-09-2024	JOB NO. 508 / DWG NO. PE-DG-508-167-A102 / REV. 0
SCALE: N.T.S	SH. 3 OF 3

THE INFORMATION ON THIS DOCUMENT IS THE PROPERTY OF BHARAT HEAVY ELECTRICALS LIMITED. IT MUST NOT BE USED DIRECTLY OR INDIRECTLY IN ANY WAY DETRIMENTAL TO THE INTEREST OF THE COMPANY.

DESIGN PARAMETERS

GOVERNING STANDARD: API-650	DESIGN INTERNAL PRESSURE: 0.62 kPa	METAL TEMPERATURE: MIN. DESIGN TEMP.: 15 °C DESIGN TEMP.: 55 °C	C.A. SHELL: 1.5 mm	RADIOGRAPH: SPOT PER CODE	
EDITION: 13TH EDITION	DESIGN EXTERNAL PRESSURE: 0.25 kPa	JOINT EFFICIENCY: SHELL: 0.85 ROOF: 0.85 BOTTOM: 0.85	C.A. BOTTOM: 1.5 mm	ANCHORAGE: YES	
APPENDIX(ICS): A, E, F	SPECIFIC GRAVITY: 1.212	BOTTOM SEAMS: BW	C.A. ROOF: 1.5 mm	WINDGIRDER: NONE	
CAPACITY TO TOP OF SHELL: 235 m^3	WIND: E= C I= 1 V= 169.49 km/h	FIXED ROOF SEAMS: BW	C.A. STRUCTURE: 1.5 mm	WORKING CAPACITY: 199 m^3	
DESIGN LIQUID LEVEL: 6.2 m	SEISMIC: SUG= 3 SC= D Av= 0.2763 TL= 4 Sp= 0.16	FLOATING ROOF SEAMS: --	NET WORKING CAPACITY: 165 m^3	DESIGN BY: PK	DATE 30-Aug-2024
MAX OPERATING TEMPERATURE: 45 °C	ALLOWABLE STRESS: 145 MPa	SHELL SEAMS DBW		CHECK BY: SR	DATE 30-Aug-2024

TANK WEIGHTS:
WEIGHT OF TANK, EMPTY : 21,585 KG
WEIGHT OF TANK WITH FULL OF PRODUCT (SG = 1.212) : 270632 KG
SEISMIC MOMENT (RING-WALL) : 1,335,675.1 N-M
SEISMIC MOMENT (SLAB) : 1,738,570.47 N-M
WIND MOMENT : 116,313.06 N-M
SEISMIC BASE SHEAR : 46894 N/M

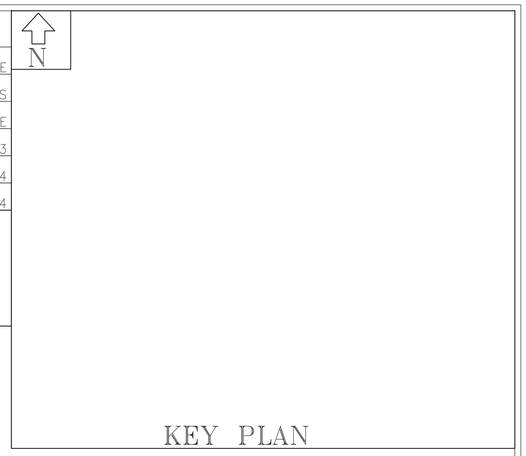

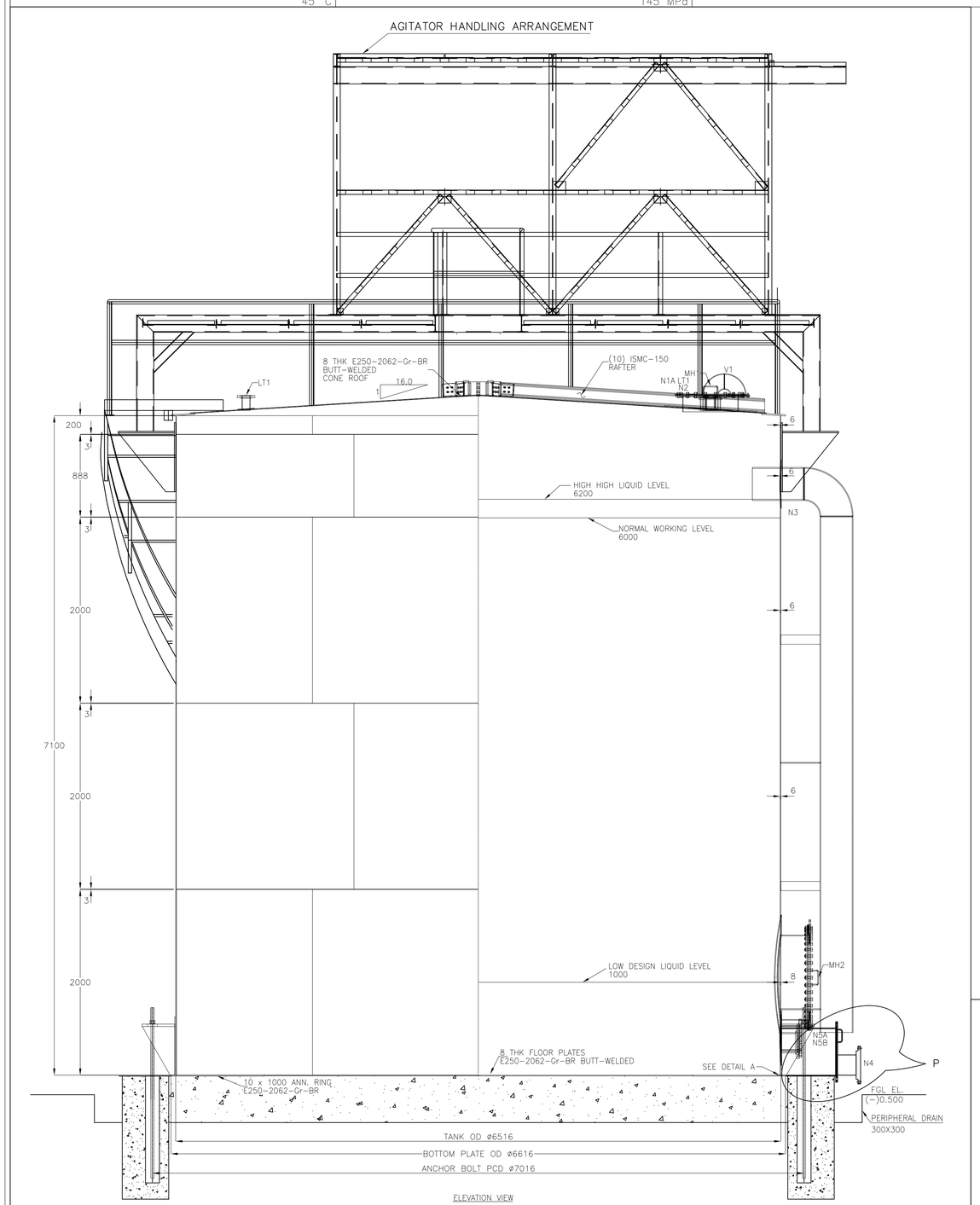

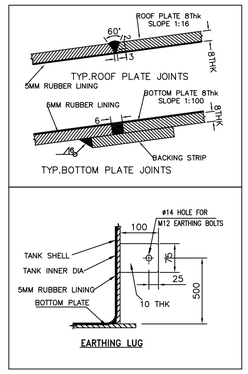

PAINTING SPECIFICATION

DESCRIPTION	INTERNAL	EXTERNAL	Underneath
SURFACE PREPARATION	BLAST CLEANING TO SA 2.5(NEAR WHITE METAL WITH SURFACE PROFILE 35-50µM		WIRE BRUSH CLEANING
PRIMER	TWO COAT OF Red Oxide Zinc Phosphate Primer to IS: 12744 DFT- 30µ. EACH	Primer coat shall consist of epoxy resin based zinc phosphate primer having minimum DFT of 100 microns.	2 Coats of High Build Coal Tar Epoxy suitably Pigmented, DFT:80-100 microns each Coat.
INTERMEDATE COAT	NA	Intermediate coat (or under coat) shall consist of epoxy resin based paint pigmented with Titanium dioxide with minimum DFT of 100 microns.	
FINAL COAT	5MM THICK OF BEST QUALITY CHLORO/BROMO BUTYL RUBBER LINING WITH HARDNESS 55±5(SHORE A HARDNESS)	Top coat shall consist of one coat of epoxy paint suitable pigmented of approved shade and colour with glossy finish and DFT of 75 microns. Additionally finishing coat of polyurethane of minimum DFT of 25 microns shall be provided.	
TOTAL DFT	60	300	160-200

NOTES:
1. ALL DIMENSIONS ARE IN MM. ELEVATIONS ARE IN METER UNLESS OTHERWISE SPECIFIED.
2. ELEVATION 0.00 IS THE GROUND FLOOR LEVEL FOR POWER HOUSE BUILDING WHICH CORRESPONDS TO RL (+)209.50M.
4. NOZZLE PROJECTIONS ARE MEASURED FROM TANK SHELL INNER TO FLANGE FACE AS APPLICABLE.
5. ALL REINFORCEMENT PADS SHALL BE PROVIDED WITH 6MM TELLTALE HOLE.
6. ALL BOLT HOLES SHALL BE STRADDLE VERTICAL CENTERLINES ON SHELL AND RADIAL CENTERLINES ON ROOF.
7. ALL PROTRUSIONS, SHARP EDGES AND SPATTER ETC. SHALL BE REMOVED FROM THE SURFACE AND ALL WELDS GROUND SMOOTH WITHOUT ANY CAVITES AND IMPERFECTION BEFORE LINING.
8. LINING SHALL BE CARRIED OUT AFTER HYDRO TEST.
9. ALL LONGITUDINAL WELDS SHALL BE STAGGERED.
10. BOTTOM PLATE SHALL UNIFORMLY REST ON FOUNDATION.
11. THE MINIMUM SIZE OF THE WELD SHALL BE EQUAL TO THE THICKNESS OF THINNER MEMBER JOINT UNLESS SPECIFIED OTHERWISE.
12. GROUNDING LUGS SHALL BE WELDED TO THE TANK BODY AT SITE TO SUIT SITE REQUIREMENT.
13. PAINTING SHALL BE AS PER APPROVED PAINTING SCHEDULE.
14. PAD PLATES SHALL BE PROVIDED ON THE TANK FOR SUPPORTING PIPES AND CABLE TRAYS.
15. ALL JOINTS OF BOTTOM PLATES ARE BUTT WELDED WITH BACKING STRIP.
16. ALL JOINTS OF ROOF PLATES ARE BUTT WELDED.
17. ALL JOINTS OF SHELL PLATES ARE DOUBLE WELDED BUTT JOINTS.
18. THREE PLATES JOINT SHALL NOT BE CLOSER THAN 300MM FROM EACH OTHER.
19. ALL FILLET WELDS SHALL BE 6MM UNLESS OTHERWISE SPECIFIED.
20. ALL HANDRAILS, FLAT AND TOE PLATE OF THE STAIRCASE SHALL BE BEND TO SUIT OUTSIDE RADIUS OF TANK DIAMETER.
22. GRATING SHALL BE HOT DIP GALVANIZED IN ACCORDANCE WITH IS: 2629 AND TESTED AS PER IS: 2633 AND 6745. QUANTITY OF ZINC COATING SHALL BE MIM 900 GM/ M2 OF SURFACE AREA (0.12MM UNIFORM THK)
23. EVERY CROSS BAR AND MAIN MEMBER SHALL BE WELDED WITH END FLATS.
24. RUBBER LINING STANDARD IS IS 4682 PART (EQUIVALENT TO BS 6374 PART V)
25. ALL WELDING TO BE COMPLETED BEFORE STARTING THE RUBBER LINING.
26. RAFTERS TO BE WELDED ON THE TOP OF ROOF FOR ENABLING RUBBER LINING INSIDE ROOF SURFACE.

REFERENCE DRAWINGS:-
1. PROCESS P&I DIAGRAM OF PRIMARY HYDRO CYCLONE FEED TANK : 9587-001-109-PVM-F-020
2. PLOT PLAN : 9587-001-301-POC-F-001

All the requirement shown under GA drwg are bar minimum, any other item found applicable during detailed engineering as per Technical Specification / Design Calculation/ Functional Requirement , shall be supplied by bidder without any commercial implication to BHEL.

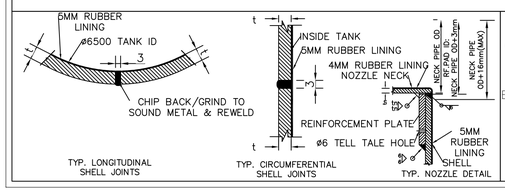

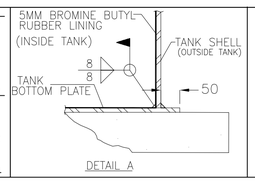

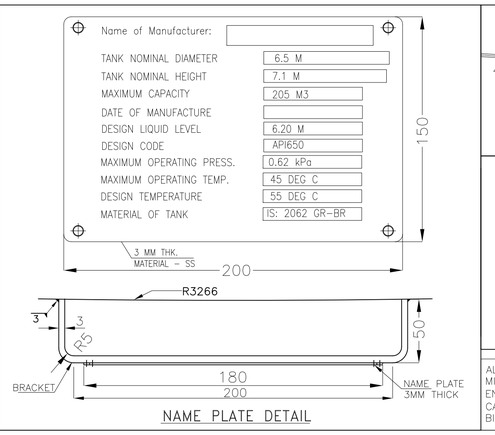

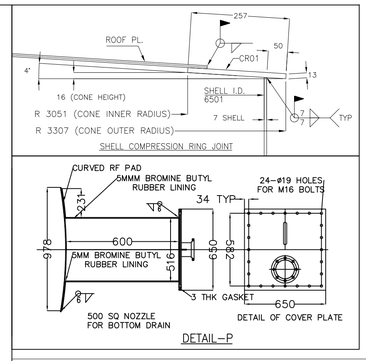

ALL THE REQUIREMENTS SHOWN UNDER GA DRAWING ARE BARE MINIMUM, ANY OTHER ITEM FOUND APPLICABLE DURING DETAILED ENGINEERING AS PER TECHNICAL SPECIFICATION/DESIGN CALCULATION/ FUNCTIONAL REQUIREMENT SHALL BE SUPPLIEDBY BIDDER WITHOUT ANY COMMERCIAL IMPLICATION TO BHEL.

REV	DESCRIPTION	BY	DATE	APPROVED
0				

REVISIONS

NTPC DRG No.	9587-109-PVM-B-143
PS-PEM	OWNER: NTPC LIMITED LARA SUPER THERMAL POWER PROJECT STAGE-II (2x800MW)
DRAWN/DATE PK/09-09-2024	GENERAL ARRANGEMENT AND LOAD DATA OF PRIMARY HYDROCLONE FEED TANK
CHECKED/DATE PK/09-09-2024	
APPROVED/DATE SR/09-09-2024	JOB NO. 508 / DWG NO. PE-DG-508-167-A101 / REV. 0
SCALE: N.T.S	SH. 1 OF 3

THE INFORMATION ON THIS DOCUMENT IS THE PROPERTY OF BHARAT HEAVY ELECTRICALS LIMITED. IT MUST NOT BE USED DIRECTLY OR INDIRECTLY IN ANY WAY DETRIMENTAL TO THE INTEREST OF THE COMPANY.

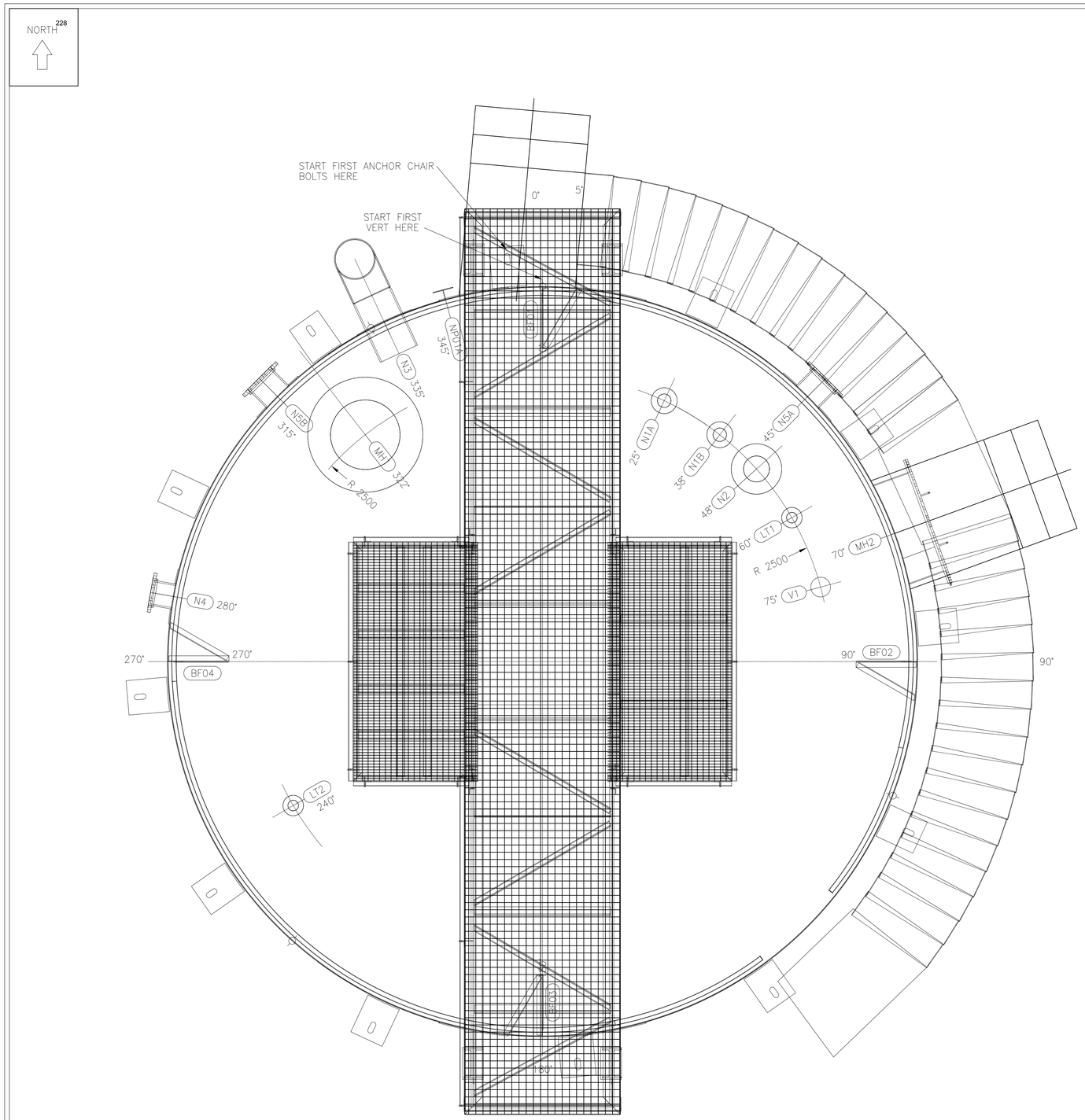

TANK PLAN VIEW

ROOF APPURTENANCE

DESCRIPTION	CUSTOM MARK	FLANGE TYPE, RATING	NOZZLE THICKNESS	SIZE	OUTSIDE PROJECTION	HORZ. RADIUS FROM CENTER OF TANK ROOF	ORIENTATION FROM TANK NORTH (0°)
ROOF MANWAY	MH-1	PL. 8	6.0	600NB	150	2500	322°
LIQUID INLET-1	N1A	150# F.F. S.O.	6.02	100NB	150	2500	25°
LIQUID INLET-2	N1B	150# F.F. S.O.	6.02	100NB	150	2500	38°
AGITATOR NOZZLE	A1	150# F.F. S.O.	6.02	500NB	150	0	–
MINIMUM FLOW	N2	150# F.F. S.O.	7.11	200NB	150	2500	48°
LEVEL TRANSMITTER-1	LT-1	150# F.F. S.O.	5.49	80NB	150	2500	60°
LEVEL TRANSMITTER-2	LT-2	150# F.F. S.O.	5.49	80NB	150	2500	240°
GOOSENECK ROOF VENT	V1	150# F.F. S.O.	8.18	150NB	150	2500	75°

SHELL APPURTENANCE

DESCRIPTION	CUSTOM MARK	FLANGE TYPE, RATING	NOZZLE THICKNESS	SIZE	OUTSIDE PROJECTION	ELEVATION FROM BOTTOM PLATE	ORIENTATION FROM TANK NORTH (0°)
BAFFLE WALL	BF-1	--	--	--	--	0	0°
BAFFLE WALL	BF-2	--	--	--	--	0	90°
BAFFLE WALL	BF-3	--	--	--	--	0	180°
BAFFLE WALL	BF-4	--	--	--	--	0	270°
PIPE OVERFLOW	N3	150# F.F. S.O.	12.7	350NB	600	6365	335°
SHELL MANWAY	MH-2	--	8.0	900NB	300	1050	70°
BOTTOM DRAIN	N4	150# F.F. S.O.	12.7	200NB	200	349	280°
SUCTION NOZZLE-1	N5A	150# F.F. S.O.	12.7	250NB	225	399	45°
SUCTION NOZZLE-2	N5B	150# F.F. S.O.	12.7	250NB	225	399	315°

NOTES:

1.- ELEVATIONS SHOWN FROM TOP OF TANK BOTTOM AT THE LOCATION OF THE APPURTENANCE.

MATERIAL SPECIFICATION

ITEM	MATERIAL
PLATES FOR SHELL, BOTTOM & ROOF	IS: 2062 GR. E250 BR
NOZZLE	50NB TO 150NB – IS:1239 ERW, 150NB AND ABOVE – IS: 3589 GR.410 ERW
MANHOLE	IS: 2062 GR. E250 BR
NOZZLE FLANGES	IS:2062 GR.E250 BR SOFF ASME B16.5 CL.150 FOR 25NB TO 600NB IS:2062 GR.E250 BR SOFF AWWA-C207 CL.D FOR 650NB TO 1800NB
HAND RAILING	IS: 1239 (MEDIUM GRADE), GALVANIZED AS PER IS: 4736
GASKETS	BUTYL RUBBER
BOLTING (NUTS & BOLTS)	SA 193 GR.B7 & SA 194 GR.2H
STRUCTURALS	IS: 2062 GR.A/B
FITTINGS	25NB TO 50NB – SA 105, SW, 65 NB TO 500NB – SA 234 WPB ASME-B16.9 (BW)
TREADS & PLATFORM GRATING	IS:2062 GR-A (GRATINGS SHALL BE ELECTRO FORGED TYPES. MINIMUM THICKNESS OF THE GRATING SHALL BE 32 MM. THE OPENING SIZE SHALL NOT BE MORE THAN 30MMX100MM. ALL GRATING SHALL BE HOT DIP GALVANIZED AT THE RATE OF 610 G PER SQ. M. AFTER SURFACE PREPARATION BY MEANS OF BLAST CLEANING/ ACID PICKLING.)
RF PAD PLATE & GUSSETS	IS: 2062 GR. E250 BR
EARTHING LUG	IS: 2062 GR. E250 BR
ANCHOR BOLT	IS: 2062 GR. E250 A
INSIDE LINING	5MM THICK OF BEST QUALITY CHLORO/BROMO BUTYL RUBBER LINING WITH HARDNESS 55(±)5(SHORE A HARDNESS)

REV	DESCRIPTION	BY	DATE	APPROVED
0				

REVISIONS

NTPC DRG No. 9587-109-PVM-B-143

PS-PEM

OWNER: NTPC LIMITED
LARA SUPER THERMAL POWER PROJECT
STAGE-II (2x800MW)

GENERAL ARRANGEMENT AND LOAD DATA OF PRIMARY HYDROCLONE FEED TANK

DRAWN/DATE PK/09-09-2024
CHECKED/DATE PK/09-09-2024
APPROVED/DATE SR/09-09-2024

JOB NO. 508
DWG NO. PE-DG-508-167-A101
REV. 0

SCALE: N.T.S

THE INFORMATION ON THIS DOCUMENT IS THE PROPERTY OF BHARAT HEAVY ELECTRICALS LIMITED. IT MUST NOT BE USED DIRECTLY OR INDIRECTLY IN ANY WAY DETRIMENTAL TO THE INTEREST OF THE COMPANY.

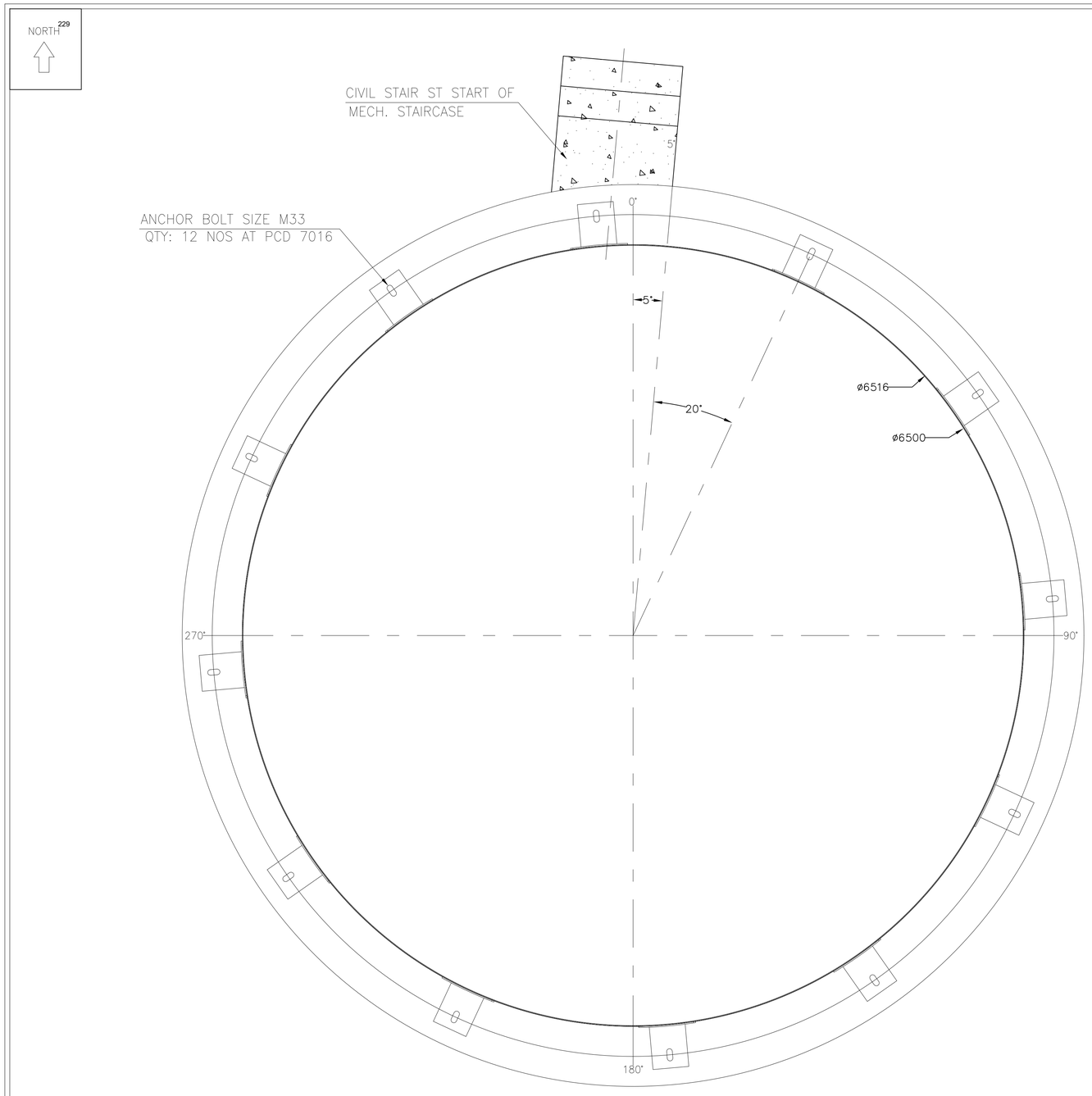

ORIENTATION

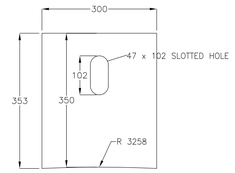

TOP PLATE AC01Aa DETAIL

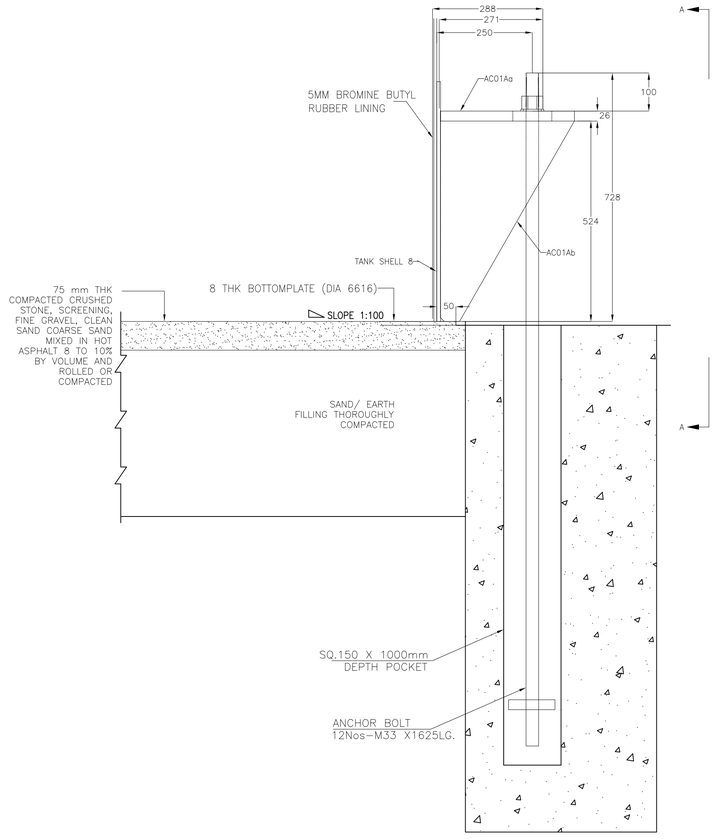

ANCHOR CHAIR DETAIL

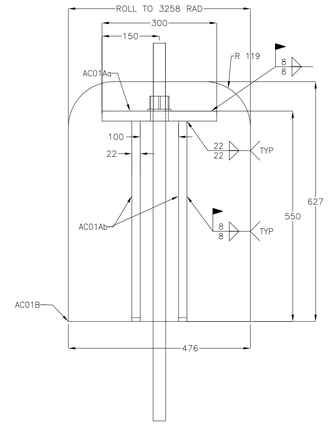

SECTION A-A

BASED ON SHELL OD.

ANCHOR ANGLE	CHAIR ARC
355°	20183
25°	1421
55°	3127
85°	4833
115°	6538
145°	8244
175°	9949
205°	11655
235°	13361
265°	15066
295°	16772
325°	18478

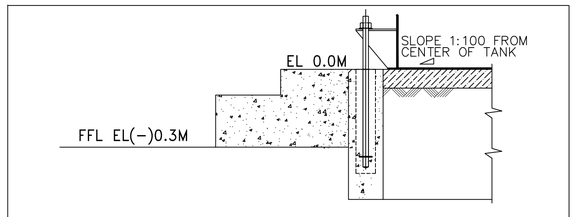

CIVIL SAIRCASE

REV	DESCRIPTION	BY	DATE	APPROVED
0				

REVISIONS

NTPC DRG No. 9587-109-PVM-B-143

PS-PEM

OWNER: NTPC LIMITED
LARA SUPER THERMAL POWER PROJECT
STAGE-II (2x800MW)

GENERAL ARRANGEMENT AND LOAD DATA OF PRIMARY HYDROCLONE FEED TANK

DRAWN/DATE PK/09-09-2024

CHECKED/DATE PK/09-09-2024

APPROVED/DATE SR/09-09-2024

JOB NO. 508

DWG NO. PE-DG-508-167-A101

REV. 0

SCALE: N.T.S

THE INFORMATION ON THIS DOCUMENT IS THE PROPERTY OF BHARAT HEAVY ELECTRICALS LIMITED. IT MUST NOT BE USED DIRECTLY OR INDIRECTLY IN ANY WAY DETRIMENTAL TO THE INTEREST OF THE COMPANY.

SH. 3 OF 3

DESIGN PARAMETERS

GOVERNING STANDARD: API-650	DESIGN INTERNAL PRESSURE: 0.62 kPa	METAL TEMPERATURE: MIN. DESIGN TEMP.: 15 °C DESIGN TEMP.: 55 °C	C.A. SHELL: 1.5 mm	RADIOGRAPH: SPOT PER CODE
EDITION: 13TH EDITION	DESIGN EXTERNAL PRESSURE: 0.25 kPa	JOINT EFFICIENCY: SHELL: 0.85 ROOF: 0.85 BOTTOM: 0.85	C.A. BOTTOM: 1.5 mm	ANCHORAGE: YES
APPENDIX(ICS): A, E, F	SPECIFIC GRAVITY: 1.113	BOTTOM SEAMS: BW	C.A. ROOF: 1.5 mm	WINDGIRDER: NONE
CAPACITY TO TOP OF SHELL: 147 m^3	WIND: E= C I= 1 V= 169.49 km/h	FIXED ROOF SEAMS: BW	C.A. STRUCTURE: 1.5 mm	WORKING CAPACITY: 126 m^3
DESIGN LIQUID LEVEL: 5.3 m	SEISMIC: SUG= 2 SC= D Av= 0.2763 TL= 4 Sp= 0.16	FLOATING ROOF SEAMS: --	NET WORKING CAPACITY: 97 m^3	DESIGN BY: PK DATE 30-Aug-2024
MAX OPERATING TEMPERATURE: 45 °C	ALLOWABLE STRESS: 145 MPa	SHELL SEAMS DBW		CHECK BY: SR DATE 30-Aug-2024

TANK WEIGHTS:
WEIGHT OF TANK, EMPTY : 15,288 KG
WEIGHT OF TANK WITH FULL OF PRODUCT (SG = 1.113) : 179151KG
SEISMIC MOMENT (RING-WALL) : 544510 N-M
SEISMIC MOMENT (SLAB) : 704333 N-M
WIND MOMENT : 169070 N-M
SEISMIC BASE SHEAR : 26610 N/M

N

KEY PLAN

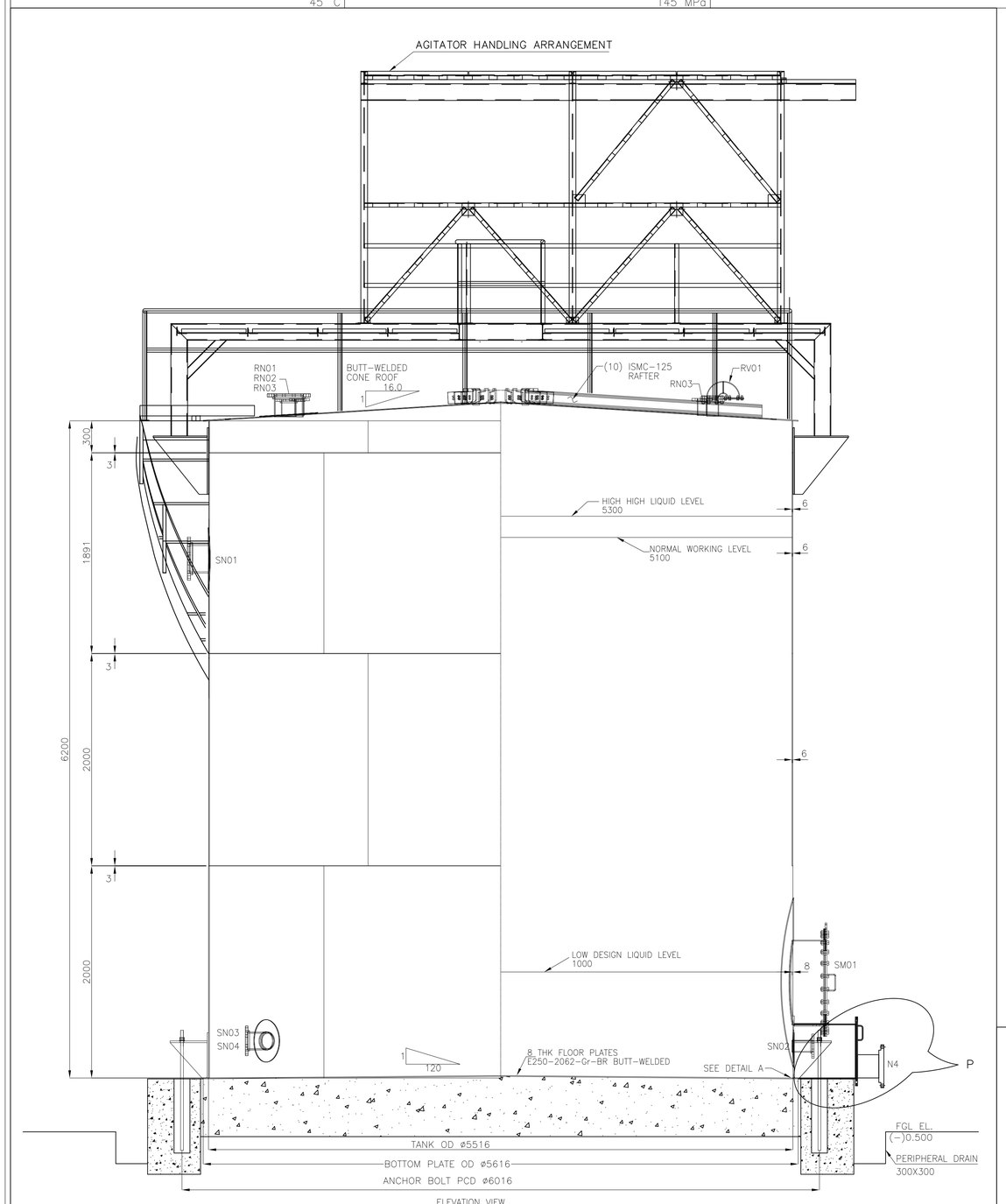

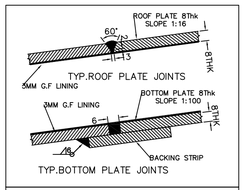

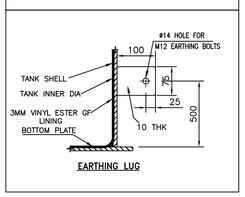

NOTES:
1. ALL DIMENSIONS ARE IN MM. ELEVATIONS ARE IN METER UNLESS OTHERWISE SPECIFIED.
2. ELEVATION 0.00 IS THE GROUND FLOOR LEVEL FOR POWER HOUSE BUILDING WHICH CORRESPONDS TO RL (+)209.50M.
4. NOZZLE PROJECTIONS ARE MEASURED FROM TANK SHELL INNER TO FLANGE FACE AS APPLICABLE.
5. ALL REINFORCEMENT PADS SHALL BE PROVIDED WITH 6MM TELLTALE HOLE.
6. ALL BOLT HOLES SHALL BE STRADDLE VERTICAL CENTERLINES ON SHELL AND RADIAL CENTERLINES ON ROOF.
7. ALL PROTRUSIONS, SHARP EDGES AND SPATTER ETC. SHALL BE REMOVED FROM THE SURFACE AND ALL WELDS GROUND SMOOTH WITHOUT ANY CAVITES AND IMPERFECTION BEFORE LINING.
8. LINING SHALL BE CARRIED OUT AFTER HYDRO TEST.
9. ALL LONGITUDINAL WELDS SHALL BE STAGGERED.
10. BOTTOM PLATE SHALL UNIFORMLY REST ON FOUNDATION.
11. THE MINIMUM SIZE OF THE WELD SHALL BE EQUAL TO THE THICKNESS OF THINNER MEMBER JOINT UNLESS SPECIFIED OTHERWISE.
12. GROUNDING LUGS SHALL BE WELDED TO THE TANK BODY AT SITE TO SUIT SITE REQUIREMENT.
13. PAINTING SHALL BE AS PER APPROVED PAINTING SCHEDULE.
14. PAD PLATES SHALL BE PROVIDED ON THE TANK FOR SUPPORTING PIPES AND CABLE TRAYS.
15. ALL JOINTS OF BOTTOM PLATES ARE BUTT WELDED WITH BACKING STRIP.
16. ALL JOINTS OF ROOF PLATES ARE BUTT WELDED.
17. ALL JOINTS OF SHELL PLATES ARE DOUBLE WELDED BUTT JOINTS.
18. THREE PLATES JOINT SHALL NOT BE CLOSER THAN 300MM FROM EACH OTHER.
19. ALL FILLET WELDS SHALL BE 6MM UNLESS OTHERWISE SPECIFIED.
20. ALL HANDRAILS, FLAT AND TOE PLATE OF THE STAIRCASE SHALL BE BEND TO SUIT OUTSIDE RADIUS OF TANK DIAMETER.
22. GRATING SHALL BE HOT DIP GALVANIZED IN ACCORDANCE WITH IS: 2629 AND TESTED AS PER IS: 2633 AND 6745. QUANTITY OF ZINC COATING SHALL BE MIM 900 GM/ M2 OF SURFACE AREA (0.12MM UNIFORM THK)
23. EVERY CROSS BAR AND MAIN MEMBER SHALL BE WELDED WITH END FLATS.
24. ALL WELDING TO BE COMPLETED BEFORE STARTING THE GF LINING.
25. RAFTERS TO BE WELDED ON THE TOP OF ROOF FOR ENABLING GF LINING INSIDE ROOF SURFACE.

PAINTING SPECIFICATION			
DESCRIPTION	INTERNAL	EXTERNAL	Underneath
SURFACE PREPARATION	BLAST CLEANING TO SA 2.5(NEAR WHITE METAL WITH SURFACE PROFILE 35-50µM		WIRE BRUSH CLEANING
PRIMER	TWO COAT OF Red Oxide Zinc Phosphate Primer to IS: 12744 DFT- 30µ. EACH	Primer coat shall consist of epoxy resin based zinc phosphate primer having minimum DFT of 100 microns.	2 Coats of High Build Coal Tar Epoxy suitably Pigmented, DFT:80-100 microns each Coat.
INTERMEDATE COAT	NA	Intermediate coat (or under coat) shall consist of epoxy resin based paint pigmented with Titanium dioxide with minimum DFT of 100 microns.	
FINAL COAT	VINYL ESTER BASED GLASS FLAKE LINING OF MIN THICKNESS 3 MM	Top coat shall consist of one coat of epoxy paint suitable pigmented of approved shade and colour with glossy finish and DFT of 75 microns. Additionally finishing coat of polyurethane of minimum DFT of 25 microns shall be provided.	
TOTAL DFT	60	300	160-200

REFERENCE DRAWINGS:-
1. PROCESS P&I DIAGRAM OF SECONDARY HYDRO CYCLONE FEED TANK : 9587-001-109-PVM-F-020
2. PLOT PLAN : 9587-001-301-POC-F-001

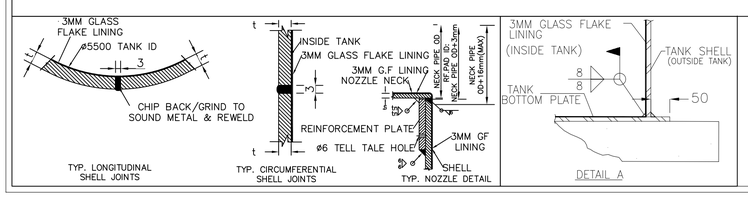

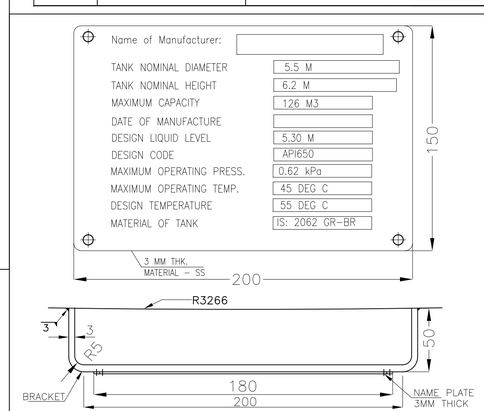

NAME PLATE DETAIL

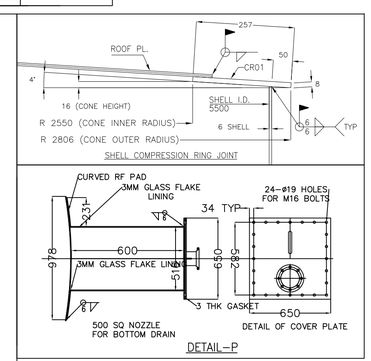

ALL THE REQUIREMENTS SHOWN UNDER GA DRAWING ARE BARE MINIMUM, ANY OTHER ITEM FOUND APPLICABLE DURING DETAILED ENGINEERING AS PER TECHNICAL SPECIFICATION/DESIGN CALCULATION/ FUNCTIONAL REQUIREMENT SHALL BE SUPPLIEDBY BIDDER WITHOUT ANY COMMERCIAL IMPLICATION TO BHEL.

All the requirement shown under GA drwg are bar minimum, any other item found applicable during detailed engineering as per Technical Specification / Design Calculation/ Functional Requirement , shall be supplied by bidder without any commercial implication to BHEL.

REV	DESCRIPTION	BY	DATE	APPROVED
0				

REVISIONS

NTPC DRG No.	9587-109-PVM-B-143
PS-PEM	OWNER: NTPC LIMITED LARA SUPER THERMAL POWER PROJECT STAGE-II (2x800MW)
DRAWN/DATE PK/09-09-2024	GENERAL ARRANGEMENT AND LOAD DATA OF SECONDARY HYDROCLONE FEED TANK
CHECKED/DATE PK/09-09-2024	
APPROVED/DATE SR/09-09-2024	JOB NO. 508 / DWG NO. PE-DG-508-167-A103 / REV. 0
SCALE: N.T.S	SH. 1 OF 3

THE INFORMATION ON THIS DOCUMENT IS THE PROPERTY OF BHARAT HEAVY ELECTRICALS LIMITED. IT MUST NOT BE USED DIRECTLY OR INDIRECTLY IN ANY WAY DETRIMENTAL TO THE INTEREST OF THE COMPANY.

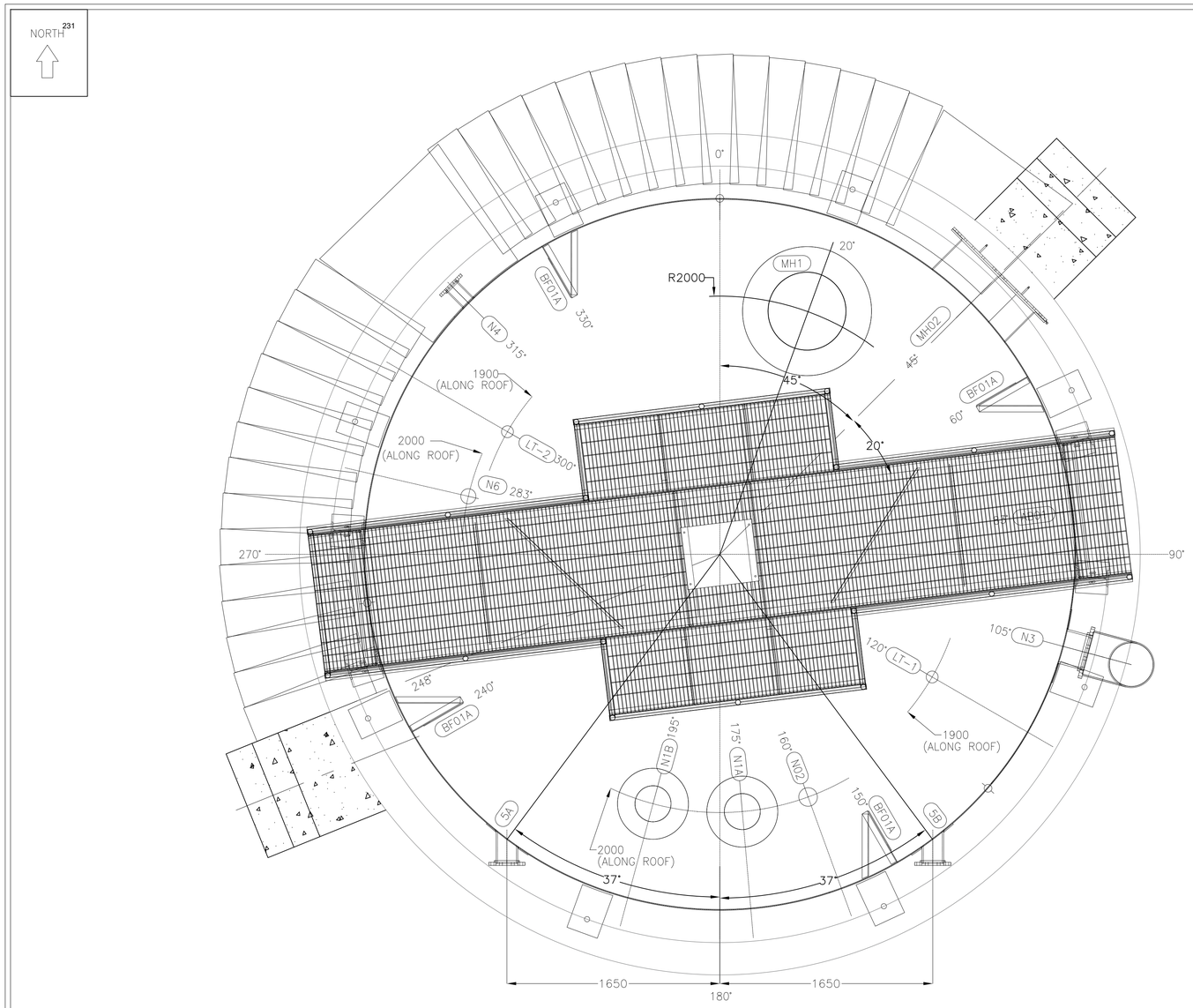

TANK PLAN VIEW

ROOF APPURTENANCE

DESCRIPTION	CUSTOM MARK	FLANGE TYPE, RATING	NOZZLE THICKNESS	SIZE	OUTSIDE PROJECTION	HORZ. RADIUS FROM CENTER OF TANK ROOF	ORIENTATION FROM TANK NORTH (0°)
		AS PER API 650					
AGITATOR NOZZLE							
LEVEL TRANSMITTER-1	LT-2	150# F.F. S.O.	4.8	80NB	150	1900	
LEVEL TRANSMITTER-2	LT-1	150# F.F. S.O.	4.8	80NB	150	1900	
GOOSENECK ROOF VENT WITH BIRD SCREEN	N6	150# F.F. S.O.	5.4	100NB			

SHELL APPURTENANCE

DESCRIPTION	CUSTOM MARK	FLANGE TYPE, RATING	NOZZLE THICKNESS	SIZE	OUTSIDE PROJECTION	ELEVATION FROM BOTTOM PLATE	ORIENTATION FROM TANK NORTH (0°)
	N3	150# F.F. S.O.	12.7	300NB	200		
	MH-2						
	N4	150# F.F. S.O.	12.7				
	N5A	150# F.F. S.O.	12.7				
	N5B	150# F.F. S.O.	12.7				

NOTES:

1.- ELEVATIONS SHOWN FROM TOP OF TANK BOTTOM AT THE LOCATION OF THE APPURTENANCE.

MATERIAL SPECIFICATION

ITEM	MATERIAL
PLATES FOR SHELL, BOTTOM & ROOF	IS: 2062 GR. E250 BR
NOZZLE	50NB TO 150NB – IS:1239 ERW, 150NB AND ABOVE – IS: 3589 GR.410 ERW
MANHOLE	IS: 2062 GR. E250 BR
NOZZLE FLANGES	IS:2062 GR.E250 BR SOFF ASME B16.5 CL.150 FOR 25NB TO 600NB IS:2062 GR.E250 BR SOFF AWWA-C207 CL.D FOR 650NB TO 1800NB
HAND RAILING	IS: 1239 (MEDIUM GRADE), GALVANIZED AS PER IS: 4736
GASKETS	BUTYL RUBBER
BOLTING (NUTS & BOLTS)	SA 193 GR.B7 & SA 194 GR.2H
STRUCTURALS	IS: 2062 GR.A/B
FITTINGS	25NB TO 50NB – SA 105, SW, 65 NB TO 500NB – SA 234 WPB ASME-B16.9 (BW)
TREADS & PLATFORM GRATING	IS:2062 GR-A (GRATINGS SHALL BE ELECTRO FORGED TYPES. MINIMUM THICKNESS OF THE GRATING SHALL BE 32 MM. THE OPENING SIZE SHALL NOT BE MORE THAN 30MMX100MM. ALL GRATING SHALL BE HOT DIP GALVANIZED AT THE RATE OF 610 G PER SQ. M. AFTER SURFACE PREPARATION BY MEANS OF BLAST CLEANING/ ACID PICKLING.)
RF PAD PLATE & GUSSETS	IS: 2062 GR. E250 BR
EARTHING LUG	IS: 2062 GR. E250 BR
ANCHOR BOLT	IS: 2062 GR. E250 A
INSIDE LINING	3MM THICK VINYL ESTER BASED GLASS FLAKE LINING

REV	DESCRIPTION	BY	DATE	APPROVED
0				

REVISIONS

NTPC DRG No. 9587-109-PVM-B-143

PS-PEM

OWNER: NTPC LIMITED
LARA SUPER THERMAL POWER PROJECT
STAGE-II (2x800MW)

GENERAL ARRANGEMENT AND LOAD DATA OF SECONDARY HYDROCLONE FEED TANK

DRAWN/DATE PK/09-09-2024

CHECKED/DATE PK/09-09-2024

APPROVED/DATE SR/09-09-2024

JOB NO. 508

DWG NO. PE-DG-508-167-A103

REV. 0

SCALE: N.T.S

THE INFORMATION ON THIS DOCUMENT IS THE PROPERTY OF BHARAT HEAVY ELECTRICALS LIMITED. IT MUST NOT BE USED DIRECTLY OR INDIRECTLY IN ANY WAY DETRIMENTAL TO THE INTEREST OF THE COMPANY.

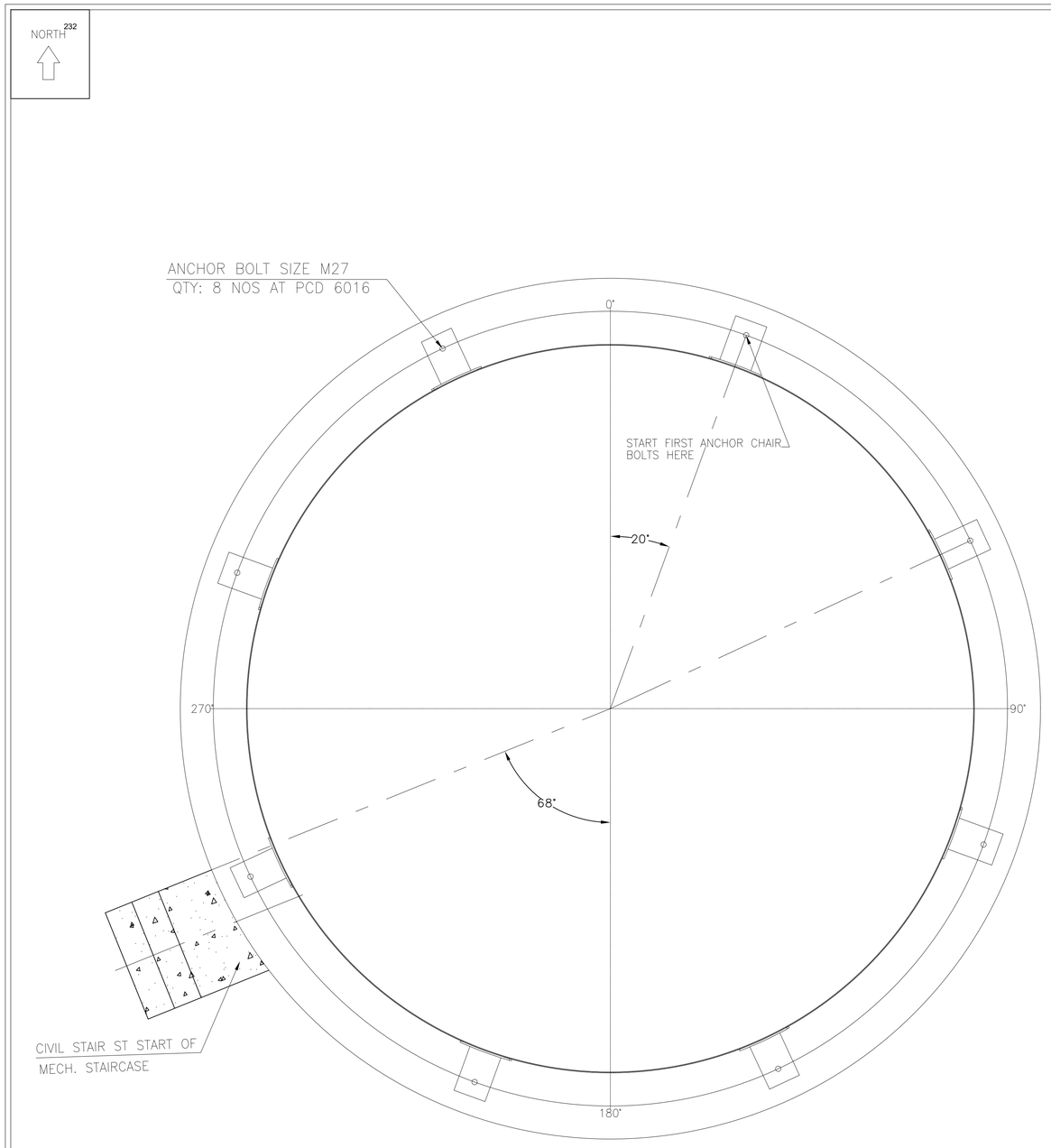

ORIENTATION

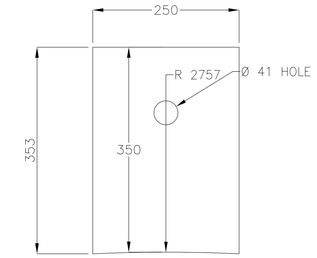

TOP PLATE AC01Aa DETAIL

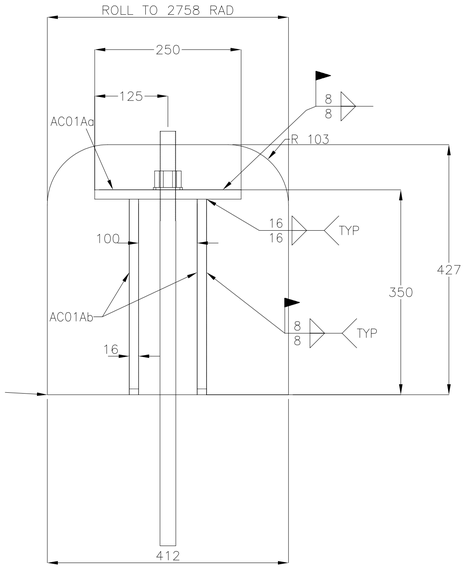

SECTION A–A

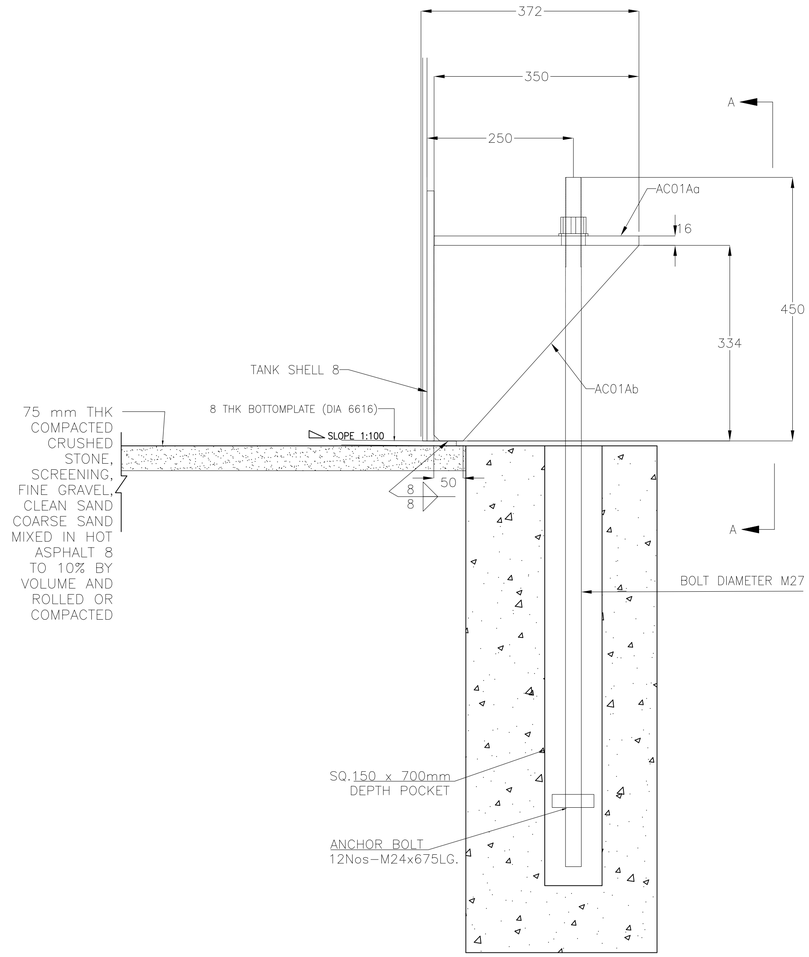

ANCHOR CHAIR DETAIL

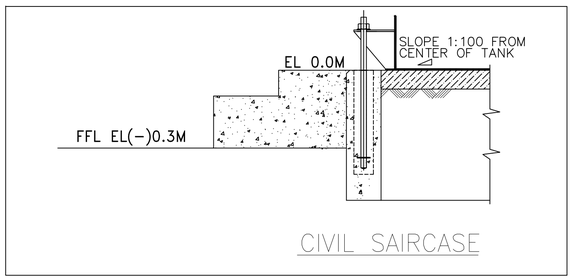

CIVIL SAIRCASE

BASED ON SHELL OD.

ANCHOR CHAIR	
ANGLE	ARC
20°	963
65°	3128
110°	5294
155°	7460
200°	9625
245°	11791
290°	13957
335°	16123

REV	DESCRIPTION	BY	DATE	APPROVED
0				

REVISIONS

NTPC DRG No. 9587–109–PVM–B–143

PS–PEM

OWNER: NTPC LIMITED
LARA SUPER THERMAL POWER PROJECT
STAGE–II (2x800MW)

GENERAL ARRANGEMENT AND LOAD DATA OF SECONDARY HYDROCLONE FEED TANK

DRAWN/DATE PK/09–09–2024
CHECKED/DATE PK/09–09–2024
APPROVED/DATE SR/09–09–2024

JOB NO. 508
DWG NO. PE–DG–508–167–A103
REV. 0

SCALE: N.T.S

THE INFORMATION ON THIS DOCUMENT IS THE PROPERTY OF BHARAT HEAVY ELECTRICALS LIMITED. IT MUST NOT BE USED DIRECTLY OR INDIRECTLY IN ANY WAY DETRIMENTAL TO THE INTEREST OF THE COMPANY.

SH. 3 OF 3

DESIGN PARAMETERS

GOVERNING STANDARD: API-650	DESIGN INTERNAL PRESSURE: 0.62 kPa	METAL TEMPERATURE: MIN. DESIGN TEMP.: 15 °C DESIGN TEMP.: 55 °C	C.A. SHELL: 1.5 mm	RADIOGRAPH: SPOT PER CODE	
EDITION: 13TH EDITION	DESIGN EXTERNAL PRESSURE: 0.25 kPa	JOINT EFFICIENCY: SHELL: 0.85 ROOF: 0.85 BOTTOM: 0.85	C.A. BOTTOM: 1.5 mm	ANCHORAGE: YES	
APPENDIX(ICS): A, E, F	SPECIFIC GRAVITY: 1024	BOTTOM SEAMS: BW	C.A. ROOF: 1.5 mm	WINDGIRDER: NONE	
CAPACITY TO TOP OF SHELL: 235 m^3	WIND: E= C I= 1 V= 169.49 km/h	FIXED ROOF SEAMS: BW	C.A. STRUCTURE: 1.5 mm	WORKING CAPACITY: 199 m^3	
DESIGN LIQUID LEVEL: 6.2 m	SEISMIC: SUG= 3 SC= D Av= 0.2763 TL= 4 Sp= 0.16	FLOATING ROOF SEAMS: --	NET WORKING CAPACITY: 165 m^3	DESIGN BY: PK	DATE 30-Aug-2024
MAX OPERATING TEMPERATURE: 45 °C	ALLOWABLE STRESS: 145 MPa	SHELL SEAMS DBW		CHECK BY: SR	DATE 30-Aug-2024

TANK WEIGHTS:
WEIGHT OF TANK, EMPTY : 21,585 KG
WEIGHT OF TANK WITH FULL OF PRODUCT (SG = 1.212) : 270632 KG
SEISMIC MOMENT (RING-WALL) : 1,335,675.1 N-M
SEISMIC MOMENT (SLAB) : 1,738,570.47 N-M
WIND MOMENT : 116,313.06 N-M
SEISMIC BASE SHEAR : 46894 N/M

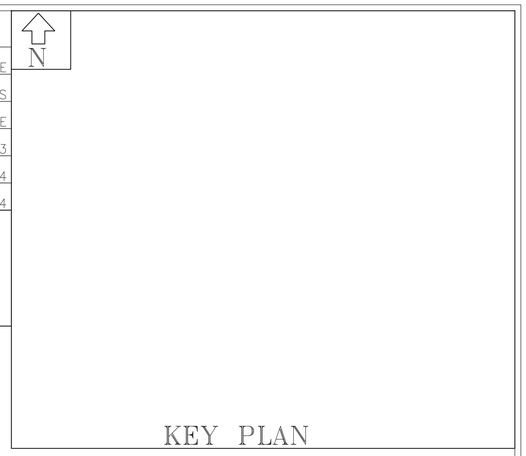

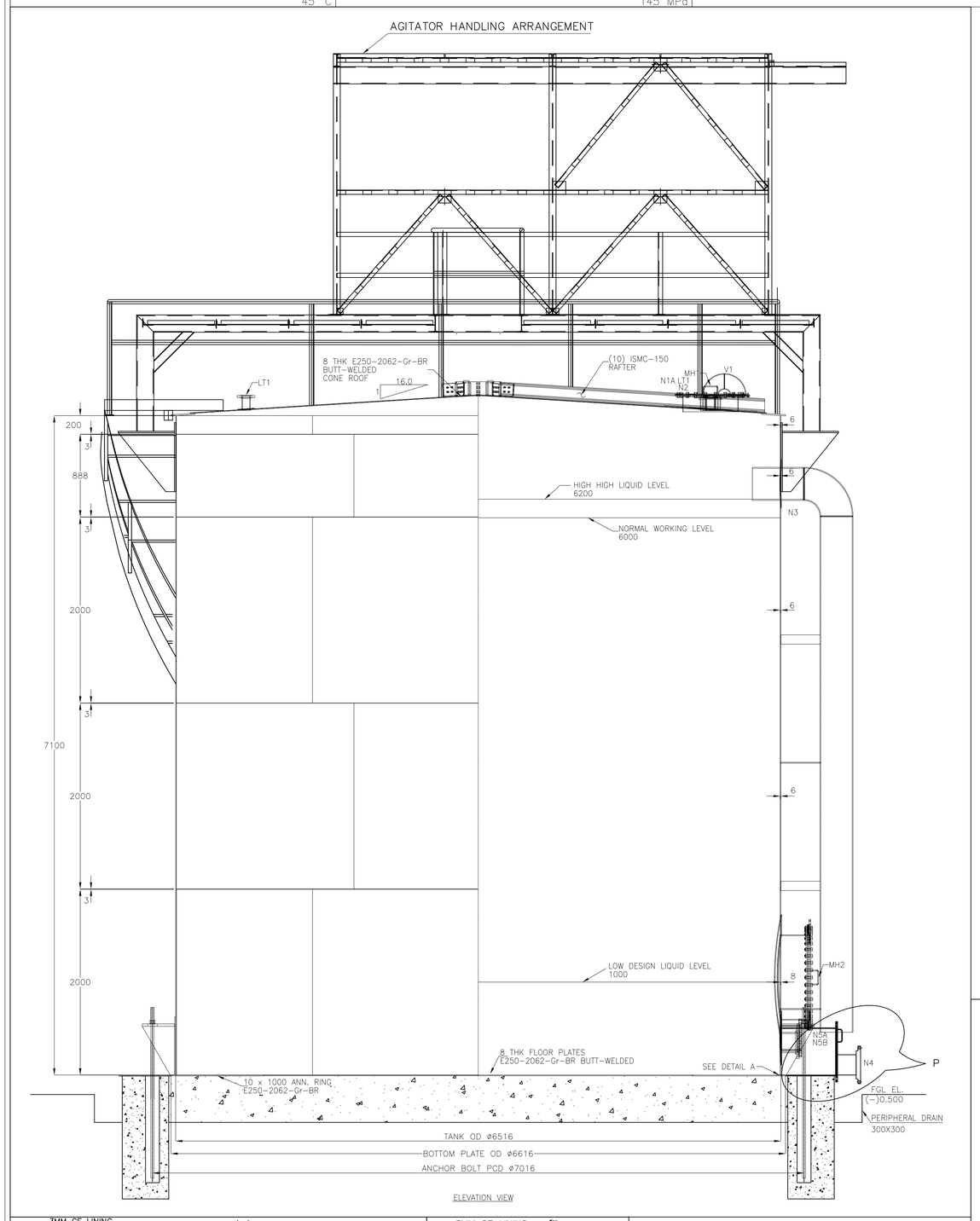

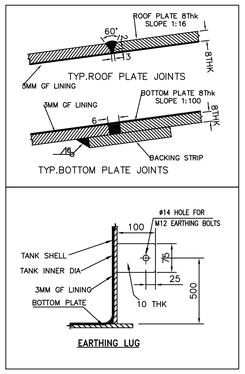

NOTES:
1. ALL DIMENSIONS ARE IN MM. ELEVATIONS ARE IN METER UNLESS OTHERWISE SPECIFIED.
2. ELEVATION 0.00 IS THE GROUND FLOOR LEVEL FOR POWER HOUSE BUILDING WHICH CORRESPONDS TO RL (+)209.50M.
4. NOZZLE PROJECTIONS ARE MEASURED FROM TANK SHELL INNER TO FLANGE FACE AS APPLICABLE.
5. ALL REINFORCEMENT PADS SHALL BE PROVIDED WITH 6MM TELLTALE HOLE.
6. ALL BOLT HOLES SHALL BE STRADDLE VERTICAL CENTERLINES ON SHELL AND RADIAL CENTERLINES ON ROOF.
7. ALL PROTRUSIONS, SHARP EDGES AND SPATTER ETC. SHALL BE REMOVED FROM THE SURFACE AND ALL WELDS GROUND SMOOTH WITHOUT ANY CAVITES AND IMPERFECTION BEFORE LINING.
8. LINING SHALL BE CARRIED OUT AFTER HYDRO TEST.
9. ALL LONGITUDINAL WELDS SHALL BE STAGGERED.
10. BOTTOM PLATE SHALL UNIFORMLY REST ON FOUNDATION.
11. THE MINIMUM SIZE OF THE WELD SHALL BE EQUAL TO THE THICKNESS OF THINNER MEMBER JOINT UNLESS SPECIFIED OTHERWISE.
12. GROUNDING LUGS SHALL BE WELDED TO THE TANK BODY AT SITE TO SUIT SITE REQUIREMENT.
13. PAINTING SHALL BE AS PER APPROVED PAINTING SCHEDULE.
14. PAD PLATES SHALL BE PROVIDED ON THE TANK FOR SUPPORTING PIPES AND CABLE TRAYS.
15. ALL JOINTS OF BOTTOM PLATES ARE BUTT WELDED WITH BACKING STRIP.
16. ALL JOINTS OF ROOF PLATES ARE BUTT WELDED.
17. ALL JOINTS OF SHELL PLATES ARE DOUBLE WELDED BUTT JOINTS.
18. THREE PLATES JOINT SHALL NOT BE CLOSER THAN 300MM FROM EACH OTHER.
19. ALL FILLET WELDS SHALL BE 6MM UNLESS OTHERWISE SPECIFIED.
20. ALL HANDRAILS, FLAT AND TOE PLATE OF THE STAIRCASE SHALL BE BEND TO SUIT OUTSIDE RADIUS OF TANK DIAMETER.
22. GRATING SHALL BE HOT DIP GALVANIZED IN ACCORDANCE WITH IS: 2629 AND TESTED AS PER IS: 2633 AND 6745. QUANTITY OF ZINC COATING SHALL BE MIM 900 GM/ M2 OF SURFACE AREA (0.12MM UNIFORM THK)
23. EVERY CROSS BAR AND MAIN MEMBER SHALL BE WELDED WITH END FLATS.
24. ALL WELDING TO BE COMPLETED BEFORE STARTING THE GF LINING.
25. RAFTERS TO BE WELDED ON THE TOP OF ROOF FOR ENABLING GF LINING INSIDE ROOF SURFACE.

REFERENCE DRAWINGS:-
1. PROCESS P&I DIAGRAM OF WASTE WATER TANK : 9587-001-109-PVM-F-020
2. PLOT PLAN : 9587-001-301-POC-F-001

PAINTING SPECIFICATION

DESCRIPTION	INTERNAL	EXTERNAL	Underneath
SURFACE PREPARATION	BLAST CLEANING TO SA 2.5(NEAR WHITE METAL WITH SURFACE PROFILE 35-50µM		WIRE BRUSH CLEANING
PRIMER	TWO COAT OF Red Oxide Zinc Phosphate Primer to IS: 12744 DFT- 30µ. EACH	Primer coat shall consist of epoxy resin based zinc phosphate primer having minimum DFT of 100 microns.	2 Coats of High Build Coal Tar Epoxy suitably Pigmented, DFT:80-100 microns each Coat.
INTERMEDATE COAT	NA	Intermediate coat (or under coat) shall consist of epoxy resin based paint pigmented with Titanium dioxide with minimum DFT of 100 microns.	
FINAL COAT	VINYL ESTER BASED GLASS FLAKE LINING OF MINIMUM THICKNESS 3 MM.	Top coat shall consist of one coat of epoxy paint suitable pigmented of approved shade and colour with glossy finish and DFT of 75 microns. Additionally finishing coat of polyurethane of minimum DFT of 25 microns shall be provided.	
TOTAL DFT	60	300	160-200

All the requirement shown under GA drwg are bar minimum, any other item found applicable during detailed engineering as per Technical Specification / Design Calculation/ Functional Requirement , shall be supplied by bidder without any commercial implication to BHEL.

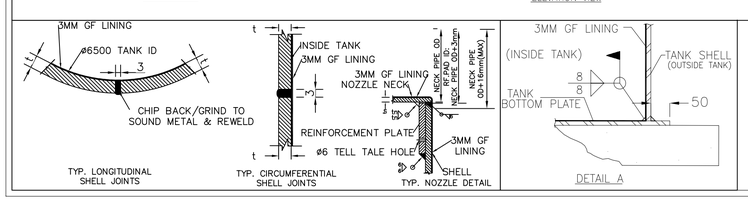

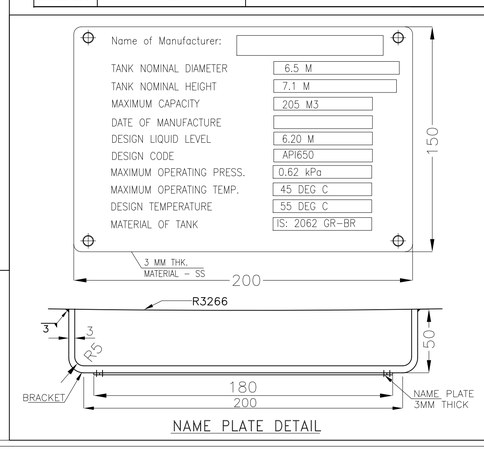

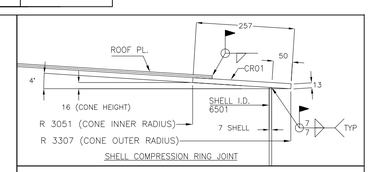

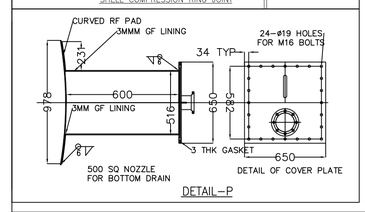

ALL THE REQUIREMENTS SHOWN UNDER GA DRAWING ARE BARE MINIMUM, ANY OTHER ITEM FOUND APPLICABLE DURING DETAILED ENGINEERING AS PER TECHNICAL SPECIFICATION/DESIGN CALCULATION/ FUNCTIONAL REQUIREMENT SHALL BE SUPPLIEDBY BIDDER WITHOUT ANY COMMERCIAL IMPLICATION TO BHEL.

REV	DESCRIPTION	BY	DATE	APPROVED
0				

REVISIONS

NTPC DRG No.	9587-109-PVM-B-143
PS-PEM	OWNER: NTPC LIMITED LARA SUPER THERMAL POWER PROJECT STAGE-II (2x800MW)
DRAWN/DATE PK/09-09-2024	GENERAL ARRANGEMENT AND LOAD DATA OF WASTE WATER TANK
CHECKED/DATE PK/09-09-2024	
APPROVED/DATE SR/09-09-2024	JOB NO. 508 / DWG NO. PE-DG-508-167-A104 / REV. 0
SCALE: N.T.S	SH. 1 OF 3

THE INFORMATION ON THIS DOCUMENT IS THE PROPERTY OF BHARAT HEAVY ELECTRICALS LIMITED. IT MUST NOT BE USED DIRECTLY OR INDIRECTLY IN ANY WAY DETRIMENTAL TO THE INTEREST OF THE COMPANY.

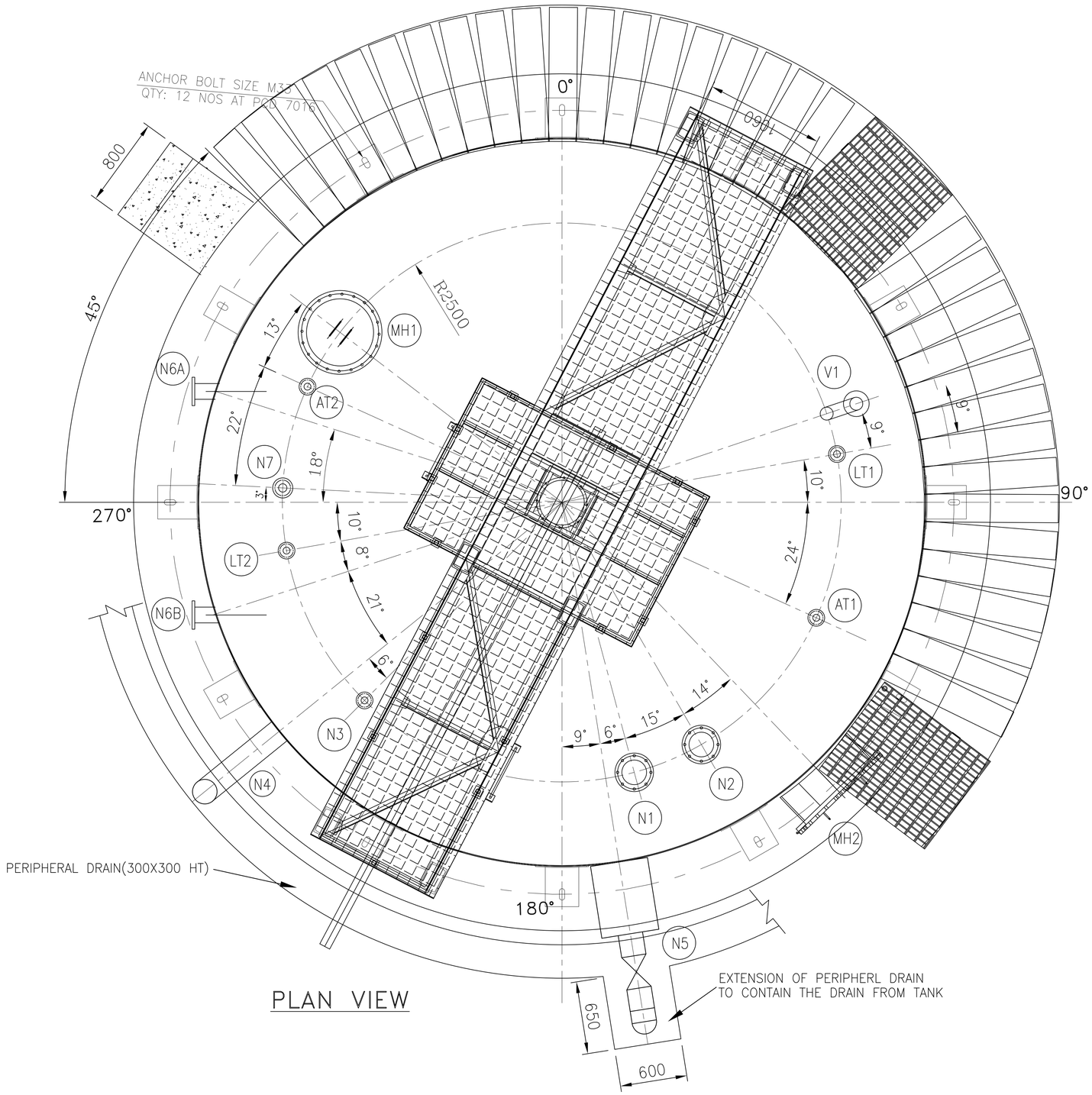

PLAN VIEW

ROOF APPURTENANCE

DESCRIPTION	CUSTOM MARK	FLANGE TYPE, RATING	NOZZLE THICKNESS	SIZE	OUTSIDE PROJECTION	HORZ. RADIUS FROM CENTER OF TANK ROOF	ORIENTATION FROM TANK NORTH (0°)
SECONDARY HYDRO CYCLONE OVERFLOW	N1	150# F.F. S.O.	6.35	200NB	150	2500	165°
SECONDARY HYDRO CYCLONE OVERFLOW	N2	150# F.F. S.O.	6.35	200NB	150	2500	150°
TANK INLET	N7	150# F.F. S.O.	4.5	50NB	150	2500	225°
TANK INLET	N3	150# F.F. S.O.	4.5	65NB	150	2500	273°
ANALYSER TRANSMITTER	AT1	150# F.F. S.O.	4.8	80NB	150	2500	114°
ANALYSER TRANSMITTER	AT2	150# F.F. S.O.	4.8	80NB	150	2500	295°
AGITATOR NOZZLE	A1	150# F.F. S.O.	6.35	350NB	200	0	0°
LEVEL TRANSMITTER	LT1	150# F.F. S.O.	4.8	80NB	150	2500	80°
LEVEL TRANSMITTER	LT2	150# F.F. S.O.	4.8	80NB	150	2500	260°
VENT WITH BIRD SCREEN	V1	150# F.F. S.O.	5.4	100NB	150	2500	71°
ROOF MANHOLE	MH1	AS PER API 650	6.0	600NB	150	2500	308°

SHELL APPURTENANCE

DESCRIPTION	CUSTOM MARK	FLANGE TYPE, RATING	NOZZLE THICKNESS	SIZE	OUTSIDE PROJECTION	ELEVATION FROM BOTTOM PLATE	ORIENTATION FROM TANK NORTH (0°)
TANK OVERFLOW	N4	150# F.F. S.O.	12.7	250NB	225	6600	231°
TANK DRAIN	N5	150# F.F. S.O.	12.7	200NB	200	Flush with Box drain	171°
PUMP SUCTION	N6A	150# F.F. S.O.	10.97	150NB	200	500	288°
PUMP SUCTION	N6B	150# F.F. S.O.	10.97	150NB	200	500	252°
SHELL MANHOLE	MH2	AS PER API 650	8.0	900NB	300	900	136°
BAFFLE WALL	BF-1	--	--	--	--	0	0°
BAFFLE WALL	BF-2	--	--	--	--	0	90°
BAFFLE WALL	BF-3	--	--	--	--	0	180°
BAFFLE WALL	BF-4	--	--	--	--	0	270°

NOTES:

1.- ELEVATIONS SHOWN FROM TOP OF TANK BOTTOM AT THE LOCATION OF THE APPURTENANCE.

MATERIAL SPECIFICATION

ITEM	MATERIAL
PLATES FOR SHELL, BOTTOM & ROOF	IS: 2062 GR. E250 BR
NOZZLE	50NB TO 150NB – IS:1239 ERW, 150NB AND ABOVE – IS: 3589 GR.410 ERW
MANHOLE	IS: 2062 GR. E250 BR
NOZZLE FLANGES	IS:2062 GR.E250 BR SOFF ASME B16.5 CL.150 FOR 25NB TO 600NB IS:2062 GR.E250 BR SOFF AWWA-C207 CL.D FOR 650NB TO 1800NB
HAND RAILING	IS: 1239 (MEDIUM GRADE), GALVANIZED AS PER IS: 4736
GASKETS	BUTYL RUBBER
BOLTING (NUTS & BOLTS)	SA 193 GR.B7 & SA 194 GR.2H
STRUCTURALS	IS: 2062 GR.A/B
FITTINGS	25NB TO 50NB – SA 105, SW, 65 NB TO 500NB – SA 234 WPB ASME-B16.9 (BW)
TREADS & PLATFORM GRATING	IS:2062 GR-A (GRATINGS SHALL BE ELECTRO FORGED TYPES. MINIMUM THICKNESS OF THE GRATING SHALL BE 32 MM. THE OPENING SIZE SHALL NOT BE MORE THAN 30MMX100MM. ALL GRATING SHALL BE HOT DIP GALVANIZED AT THE RATE OF 610 G PER SQ. M. AFTER SURFACE PREPARATION BY MEANS OF BLAST CLEANING/ ACID PICKLING.)
RF PAD PLATE & GUSSETS	IS: 2062 GR. E250 BR
EARTHING LUG	IS: 2062 GR. E250 BR
ANCHOR BOLT	IS: 2062 GR. E250 A
INSIDE LINING	VINYL ESTER BASED GLASS FLAKE LINING OF MIN THICKNESS 3MM

REV	DESCRIPTION	BY	DATE	APPROVED
0				

REVISIONS

NTPC DRG No. 9587-109-PVM-B-143

भारत हेवी इलेक्ट्रिकल्स लिमिटेड
BHEL
PS-PEM

OWNER: NTPC LIMITED
LARA SUPER THERMAL POWER PROJECT
STAGE-II (2x800MW)

GENERAL ARRANGEMENT AND LOAD DATA OF WASTE WATER TANK

DRAWN/DATE PK/09-09-2024
CHECKED/DATE PK/09-09-2024
APPROVED/DATE SR/09-09-2024

JOB NO. 508
DWG NO. PE-DG-508-167-A104
REV. 0

SCALE: N.T.S

THE INFORMATION ON THIS DOCUMENT IS THE PROPERTY OF BHARAT HEAVY ELECTRICALS LIMITED. IT MUST NOT BE USED DIRECTLY OR INDIRECTLY IN ANY WAY DETRIMENTAL TO THE INTEREST OF THE COMPANY.

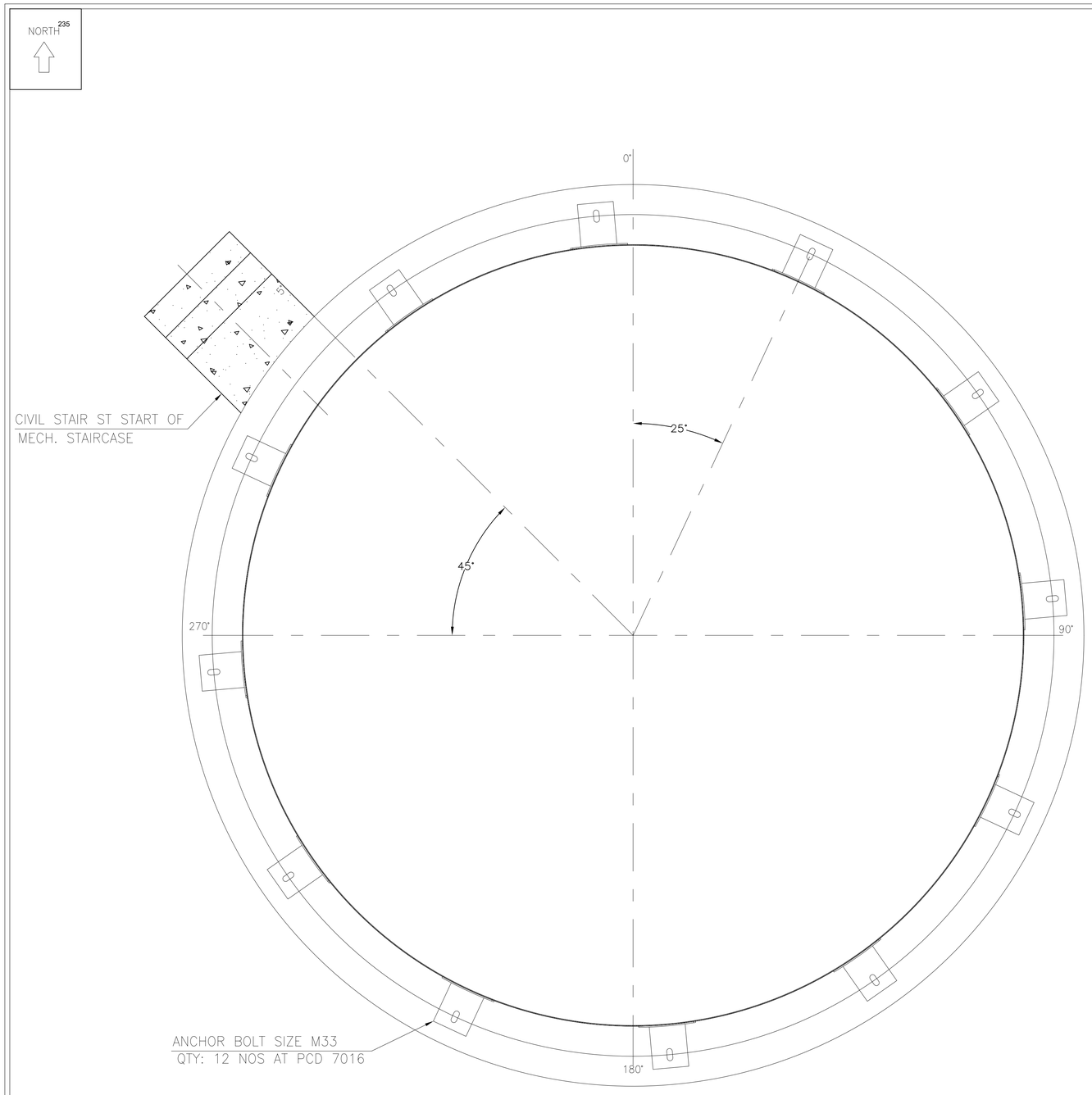

ORIENTATION

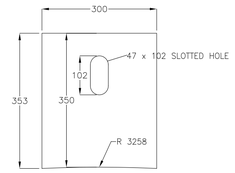

TOP PLATE AC01Aa DETAIL

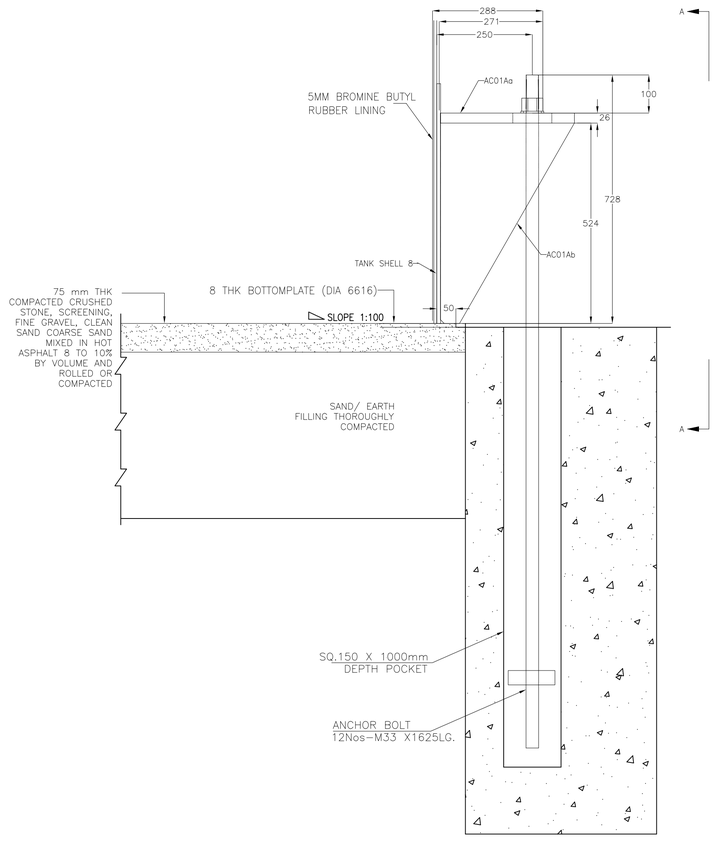

ANCHOR CHAIR DETAIL

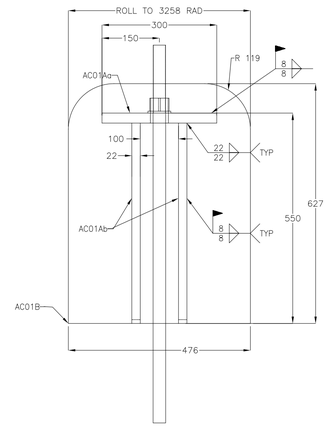

SECTION A-A

BASED ON SHELL OD.

ANCHOR CHAIR	
ANGLE	ARC
355°	20183
25°	1421
55°	3127
85°	4833
115°	6538
145°	8244
175°	9949
205°	11655
235°	13361
265°	15066
295°	16772
325°	18478

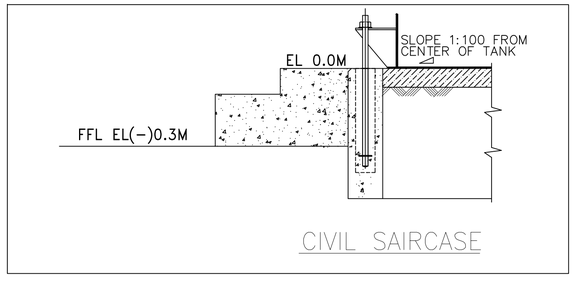

CIVIL SAIRCASE

REV	DESCRIPTION	BY	DATE	APPROVED
0				

REVISIONS

NTPC DRG No. 9587-109-PVM-B-143

PS-PEM

OWNER: NTPC LIMITED
LARA SUPER THERMAL POWER PROJECT
STAGE-II (2x800MW)

GENERAL ARRANGEMENT AND LOAD DATA OF WASTE WATER TANK

DRAWN/DATE PK/09-09-2024

CHECKED/DATE PK/09-09-2024

APPROVED/DATE SR/09-09-2024

JOB NO. 508

DWG NO. PE-DG-508-167-A104

REV. 0

SCALE: N.T.S

THE INFORMATION ON THIS DOCUMENT IS THE PROPERTY OF BHARAT HEAVY ELECTRICALS LIMITED. IT MUST NOT BE USED DIRECTLY OR INDIRECTLY IN ANY WAY DETRIMENTAL TO THE INTEREST OF THE COMPANY.

SH. 3 OF 3

DESIGN PARAMETERS

GOVERNING STANDARD: API-650	DESIGN INTERNAL PRESSURE: 0.62 kPa	METAL TEMPERATURE: MIN. DESIGN TEMP.: 15 °C DESIGN TEMP.: 55 °C	C.A. SHELL: 1.5 mm	RADIOGRAPH: SPOT PER CODE	
EDITION: 13TH EDITION	DESIGN EXTERNAL PRESSURE: 0.25 kPa	JOINT EFFICIENCY: SHELL: 0.85 ROOF: 0.85 BOTTOM: 0.85	C.A. BOTTOM: 1.5 mm	ANCHORAGE: YES	
APPENDIX(ICS): A, E, F	SPECIFIC GRAVITY: 1.215	BOTTOM SEAMS: BW	C.A. ROOF: 1.5 mm	WINDGIRDER: NONE	
CAPACITY TO TOP OF SHELL: 1718 m^3	WIND: E= C I= 1 V= 169.49 km/h	FIXED ROOF SEAMS: BW	C.A. STRUCTURE: 1.5 mm	WORKING CAPACITY: 1558 m^3	
DESIGN LIQUID LEVEL: 12.9 m	SEISMIC: SUG= 2 SC= D Av= 0.2763 TL= 4 Sp= 0.16	FLOATING ROOF SEAMS: --	NET WORKING CAPACITY: 1435 m^3	DESIGN BY: PK	DATE 30-Aug-2024
MAX OPERATING TEMPERATURE: 45 °C	ALLOWABLE STRESS: 145 MPa	SHELL SEAMS DBW		CHECK BY: SR	DATE 30-Aug-2024

TANK WEIGHTS:
WEIGHT OF TANK, EMPTY : 76000 KG
WEIGHT OF TANK WITH FULL OF PRODUCT (SG = 1.215) : 2163370 KG
SEISMIC MOMENT (RING-WALL) : 16,211,766.42 N-M
SEISMIC MOMENT (SLAB) : 21,390,205.61 N-M
WIND MOMENT : 1972 KN-M
SEISMIC BASE SHEAR : 221 KN/M

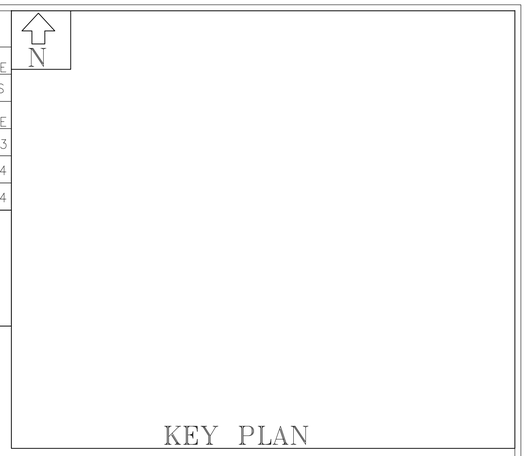

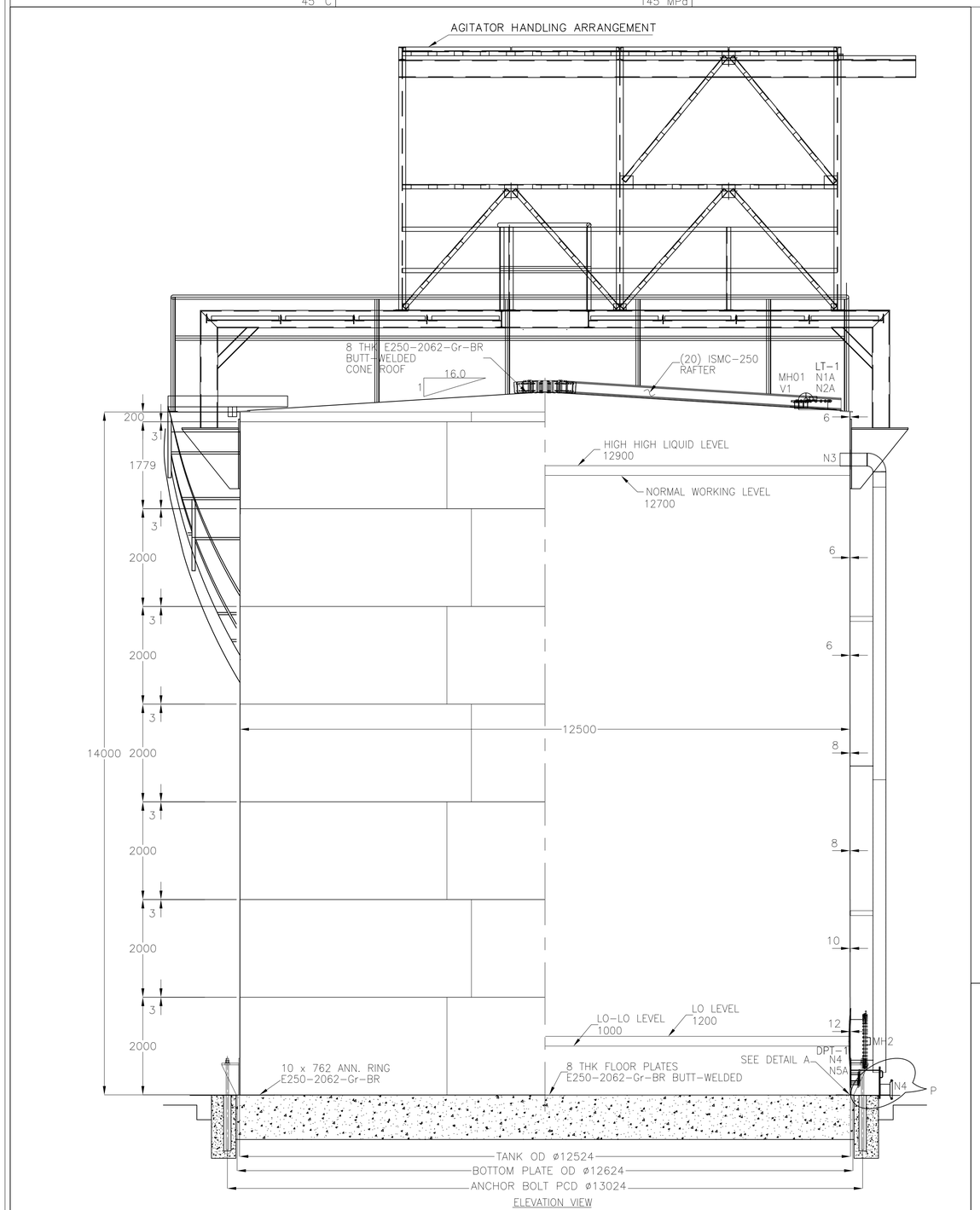

ELEVATION VIEW

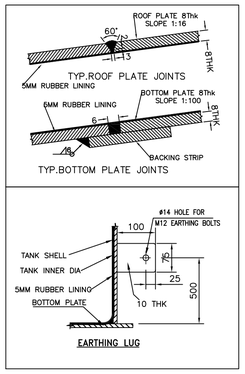

PAINTING SPECIFICATION			
DESCRIPTION	INTERNAL	EXTERNAL	Underneath
SURFACE PREPARATION	BLAST CLEANING TO SA 2.5(NEAR WHITE METAL WITH SURFACE PROFILE 35-50µM		WIRE BRUSH CLEANING
PRIMER	TWO COAT OF Red Oxide Zinc Phosphate Primer to IS: 12744 DFT- 30µ. EACH	Primer coat shall consist of epoxy resin based zinc phosphate primer having minimum DFT of 100 microns.	2 Coats of High Build Coal Tar Epoxy suitably Pigmented, DFT:80-100 microns each Coat.
INTERMEDATE COAT	NA	Intermediate coat (or under coat) shall consist of epoxy resin based paint pigmented with Titanium dioxide with minimum DFT of 100 microns.	
FINAL COAT	5MM THICK OF BEST QUALITY CHLORO/BROMO BUTYL RUBBER LINING WITH HARDNESS 55±5(SHORE A HARDNESS)	Top coat shall consist of one coat of epoxy paint suitable pigmented of approved shade and colour with glossy finish and DFT of 75 microns. Additionally finishing coat of polyurethane of minimum DFT of 25 microns shall be provided.	
TOTAL DFT	60	300	160-200

NOTES:
1. ALL DIMENSIONS ARE IN MM. ELEVATIONS ARE IN METER UNLESS OTHERWISE SPECIFIED.
2. ELEVATION 0.00 IS THE GROUND FLOOR LEVEL FOR POWER HOUSE BUILDING WHICH CORRESPONDS TO RL (+)209.50M.
4. NOZZLE PROJECTIONS ARE MEASURED FROM TANK SHELL INNER TO FLANGE FACE AS APPLICABLE.
5. ALL REINFORCEMENT PADS SHALL BE PROVIDED WITH 6MM TELLTALE HOLE.
6. ALL BOLT HOLES SHALL BE STRADDLE VERTICAL CENTERLINES ON SHELL AND RADIAL CENTERLINES ON ROOF.
7. ALL PROTRUSIONS, SHARP EDGES AND SPATTER ETC. SHALL BE REMOVED FROM THE SURFACE AND ALL WELDS GROUND SMOOTH WITHOUT ANY CAVITES AND IMPERFECTION BEFORE LINING.
8. LINING SHALL BE CARRIED OUT AFTER HYDRO TEST.
9. ALL LONGITUDINAL WELDS SHALL BE STAGGERED.
10. BOTTOM PLATE SHALL UNIFORMLY REST ON FOUNDATION.
11. THE MINIMUM SIZE OF THE WELD SHALL BE EQUAL TO THE THICKNESS OF THINNER MEMBER JOINT UNLESS SPECIFIED OTHERWISE.
12. GROUNDING LUGS SHALL BE WELDED TO THE TANK BODY AT SITE TO SUIT SITE REQUIREMENT.
13. PAINTING SHALL BE AS PER APPROVED PAINTING SCHEDULE.
14. PAD PLATES SHALL BE PROVIDED ON THE TANK FOR SUPPORTING PIPES AND CABLE TRAYS.
15. ALL JOINTS OF BOTTOM PLATES ARE BUTT WELDED WITH BACKING STRIP.
16. ALL JOINTS OF ROOF PLATES ARE BUTT WELDED.
17. ALL JOINTS OF SHELL PLATES ARE DOUBLE WELDED BUTT JOINTS.
18. THREE PLATES JOINT SHALL NOT BE CLOSER THAN 300MM FROM EACH OTHER.
19. ALL FILLET WELDS SHALL BE 6MM UNLESS OTHERWISE SPECIFIED.
20. ALL HANDRAILS, FLAT AND TOE PLATE OF THE STAIRCASE SHALL BE BEND TO SUIT OUTSIDE RADIUS OF TANK DIAMETER.
22. GRATING SHALL BE HOT DIP GALVANIZED IN ACCORDANCE WITH IS: 2629 AND TESTED AS PER IS: 2633 AND 6745. QUANTITY OF ZINC COATING SHALL BE MIM 900 GM/ M2 OF SURFACE AREA (0.12MM UNIFORM THK)
23. EVERY CROSS BAR AND MAIN MEMBER SHALL BE WELDED WITH END FLATS.
24. RUBBER LINING STANDARD IS IS 4682 PART (EQUIVALENT TO BS 6374 PART V)
25. ALL WELDING TO BE COMPLETED BEFORE STARTING THE RUBBER LINING.
26. RAFTERS TO BE WELDED ON THE TOP OF ROOF FOR ENABLING RUBBER LINING INSIDE ROOF SURFACE.

REFERENCE DRAWINGS:-
1. PROCESS P&I DIAGRAM OF LIMESTONE SLURRY TANK : 9587-001-109-PVM-F-001
2. PLOT PLAN : 9587-001-301-POC-F-001

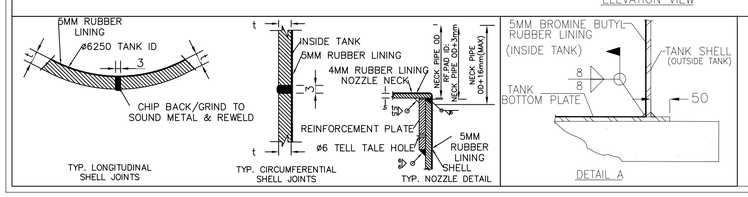

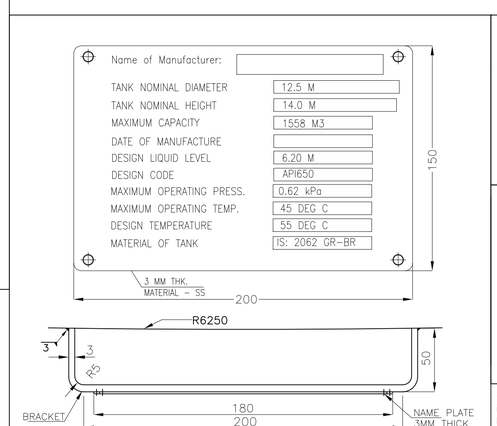

NAME PLATE DETAIL

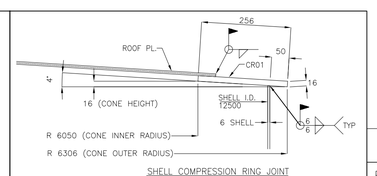

SHELL COMPRESSION RING JOINT

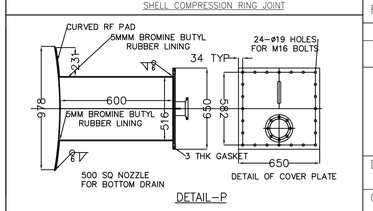

DETAIL-P

ALL THE REQUIREMENTS SHOWN UNDER GA DRAWING ARE BARE MINIMUM, ANY OTHER ITEM FOUND APPLICABLE DURING DETAILED ENGINEERING AS PER TECHNICAL SPECIFICATION/DESIGN CALCULATION/ FUNCTIONAL REQUIREMENT SHALL BE SUPPLIEDBY BIDDER WITHOUT ANY COMMERCIAL IMPLICATION TO BHEL.

All the requirement shown under GA drwg are bar minimum, any other item found applicable during detailed engineering as per Technical Specification / Design Calculation/ Functional Requirement , shall be supplied by bidder without any commercial implication to BHEL.

REV	DESCRIPTION	BY	DATE	APPROVED
0				

REVISIONS

NTPC DRG No.	9587-109-PVM-B-143
PS-PEM	OWNER: NTPC LIMITED LARA SUPER THERMAL POWER PROJECT STAGE-II (2x800MW)
DRAWN/DATE PK/09-09-2024	GENERAL ARRANGEMENT AND LOAD DATA OF LIMESTONE SLURRY TANK # A
CHECKED/DATE PK/09-09-2024	
APPROVED/DATE SR/09-09-2024	JOB NO. 508 / DWG NO. PE-DG-508-167-A105 / REV. 0
SCALE: N.T.S	SH. 1 OF 3

THE INFORMATION ON THIS DOCUMENT IS THE PROPERTY OF BHARAT HEAVY ELECTRICALS LIMITED. IT MUST NOT BE USED DIRECTLY OR INDIRECTLY IN ANY WAY DETRIMENTAL TO THE INTEREST OF THE COMPANY.

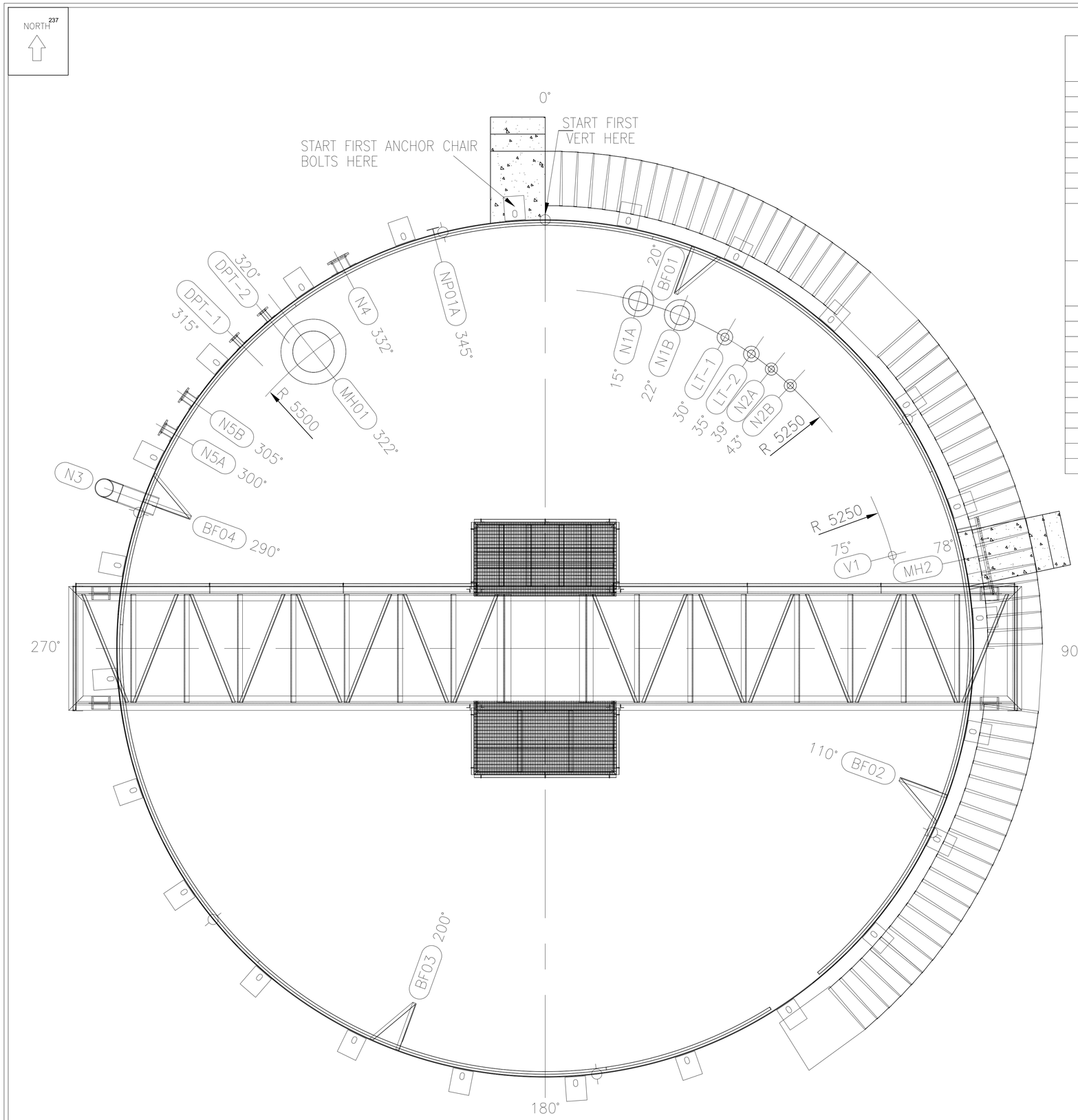

PLAN VIEW APPURTENANCE

DESCRIPTION	CUSTOM MARK	FLANGE TYPE, RATING	NOZZLE THICKNESS	SIZE	OUTSIDE PROJECTION	HORZ. RADIUS FROM CENTER OF TANK ROOF	ORIENTATION FROM TANK NORTH (0°)
ROOF MANWAY	MH-1	PL. 6	6.0	600NB	150	5500	322°
LIQUID INLET-1	N1A	150# F.F. S.O.	6.35	250NB	150	5250	22°
LIQUID INLET-2	N1B	150# F.F. S.O.	6.35	250NB	150	5250	15°
MINIMUM FLOW	N2A	150# F.F. S.O.	5.49	80NB	150	5250	39°
MINIMUM FLOW	N2B	150# F.F. S.O.	5.49	80NB	150	5250	43°
LEVEL TRANSMITTER-1	LT-1	150# F.F. S.O.	5.49	80NB	150	5250	30°
LEVEL TRANSMITTER-2	LT-2	150# F.F. S.O.	5.49	80NB	150	5250	35°
GOOSENECK ROOF VENT	V1	150# F.F. S.O.	6.02	100NB	150	5250	75°

ELEVATION VIEW APPURTENANCE

DESCRIPTION	CUSTOM MARK	FLANGE TYPE, RATING	NOZZLE THICKNESS	SIZE	OUTSIDE PROJECTION	ELEVATION FROM BOTTOM PLATE	ORIENTATION FROM TANK NORTH (0°)
BAFFLE WALL	BF-1	--	--	--	--	0	20°
BAFFLE WALL	BF-2	--	--	--	--	0	110°
BAFFLE WALL	BF-3	--	--	--	--	0	200°
BAFFLE WALL	BF-4	--	--	--	--	0	290°
PIPE OVERFLOW	N3	150# F.F. S.O.	12.7	250NB	600	13024	290°
SHELL MANWAY	MH-2	PL. 25	10.0	900NB	300	1100	78°
BOTTOM DRAIN	N4	150# F.F. S.O.	12.7	200NB	200	350	332°
SUCTION NOZZLE-1	N5A	150# F.F. S.O.	12.7	125NB	200	350	300°
SUCTION NOZZLE-2	N5B	150# F.F. S.O.	12.7	125NB	200	350	305°
DIFF PRESSURE TRANSMITTER-1	DPT-1	150# F.F. S.O.	7.62	80NB	175	250	315°
DIFF PRESSURE TRANSMITTER-2	DPT-2	150# F.F. S.O.	7.62	80NB	175	250	320°

NOTES:

1.- ELEVATIONS SHOWN FROM TOP OF TANK BOTTOM AT THE LOCATION OF THE APPURTENANCE.

MATERIAL SPECIFICATION

ITEM	MATERIAL
PLATES FOR SHELL, BOTTOM & ROOF	IS: 2062 GR. E250 BR
NOZZLE	50NB TO 150NB - IS:1239 ERW, 150NB AND ABOVE - IS: 3589 GR.410 ERW
MANHOLE	IS: 2062 GR. E250 BR
NOZZLE FLANGES	IS:2062 GR.E250 BR SOFF ASME B16.5 CL.150 FOR 25NB TO 600NB IS:2062 GR.E250 BR SOFF AWWA-C207 CL.D FOR 650NB TO 1800NB
HAND RAILING	IS: 1239 (MEDIUM GRADE), GALVANIZED AS PER IS: 4736
GASKETS	BUTYL RUBBER
BOLTING (NUTS & BOLTS)	SA 193 GR.B7 & SA 194 GR.2H
STRUCTURALS	IS: 2062 GR.A/B
FITTINGS	25NB TO 50NB - SA 105, SW, 65 NB TO 500NB - SA 234 WPB ASME-B16.9 (BW)
TREADS & PLATFORM GRATING	IS:2062 GR-A (GRATINGS SHALL BE ELECTRO FORGED TYPES. MINIMUM THICKNESS OF THE GRATING SHALL BE 32 MM. THE OPENING SIZE SHALL NOT BE MORE THAN 30MMX100MM. ALL GRATING SHALL BE HOT DIP GALVANIZED AT THE RATE OF 610 G PER SQ. M. AFTER SURFACE PREPARATION BY MEANS OF BLAST CLEANING/ ACID PICKLING.)
RF PAD PLATE & GUSSETS	IS: 2062 GR. E250 BR
EARTHING LUG	IS: 2062 GR. E250 BR
ANCHOR BOLT	IS: 2062 GR. E250 A
INSIDE LINING	5MM THICK OF BEST QUALITY CHLORO/BROMO BUTYL RUBBER LINING WITH HARDNESS 55(±)5(SHORE A HARDNESS)

REV	DESCRIPTION	BY	DATE	APPROVED
0				

REVISIONS

NTPC DRG No. 9587-109-PVM-B-143

PS-PEM

OWNER: NTPC LIMITED
LARA SUPER THERMAL POWER PROJECT
STAGE-II (2x800MW)

GENERAL ARRANGEMENT AND LOAD DATA OF LIMESTONE SLURRY TANK # A

DRAWN/DATE PK/09-09-2024

CHECKED/DATE PK/09-09-2024

APPROVED/DATE SR/09-09-2024

JOB NO. 508

DWG NO. PE-DG-508-167-A105

REV. 0

SCALE: N.T.S

THE INFORMATION ON THIS DOCUMENT IS THE PROPERTY OF BHARAT HEAVY ELECTRICALS LIMITED. IT MUST NOT BE USED DIRECTLY OR INDIRECTLY IN ANY WAY DETRIMENTAL TO THE INTEREST OF THE COMPANY.

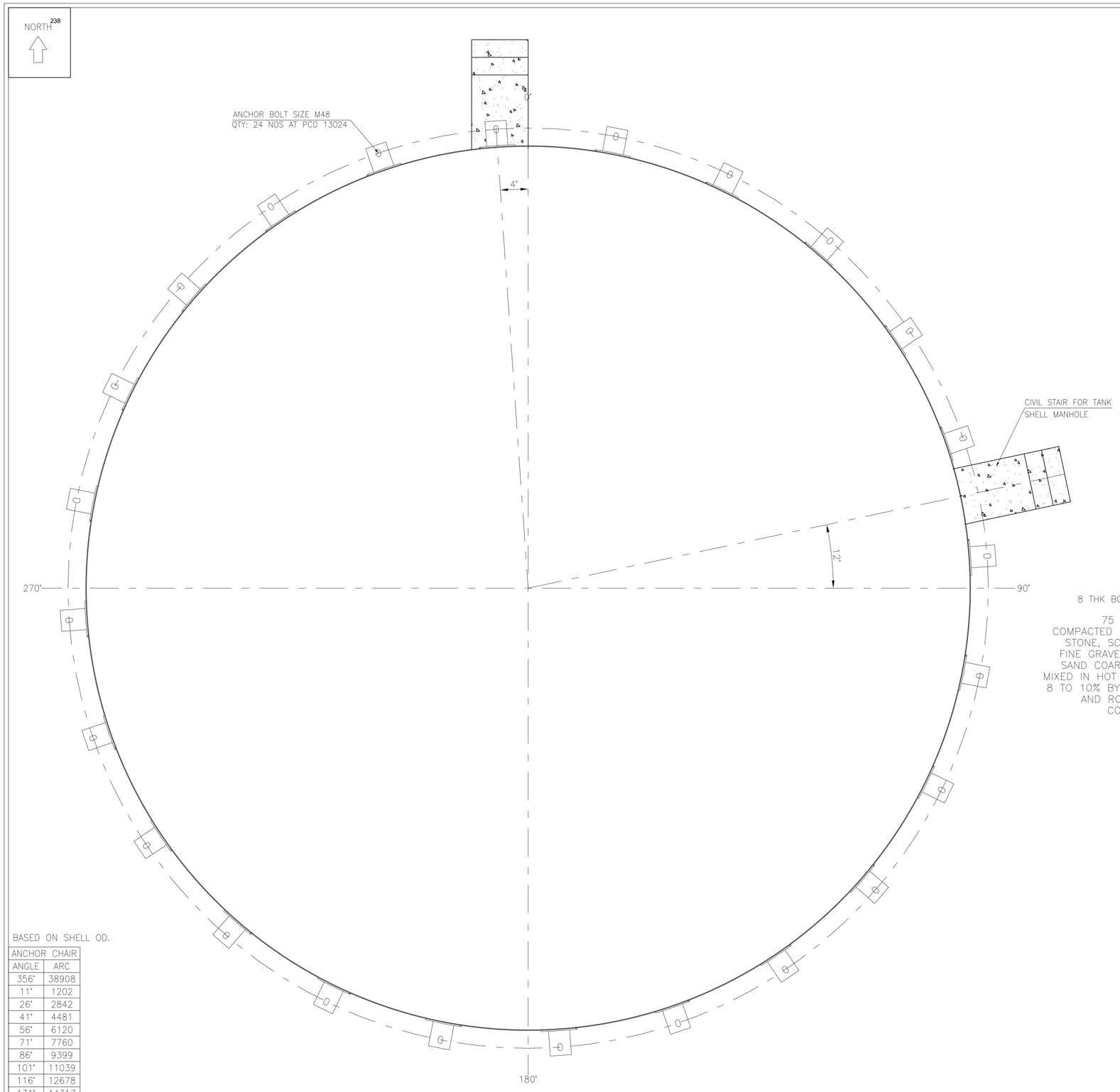

ORIENTATION

BASED ON SHELL OD.

ANCHOR ANGLE	CHAIR ARC
356°	38908
11°	1202
26°	2842
41°	4481
56°	6120
71°	7760
86°	9399
101°	11039
116°	12678
131°	14317
146°	15957
161°	17596
176°	19235
191°	20875
206°	22514
221°	24154
236°	25793
251°	27432
266°	29072
281°	30711
296°	32351
311°	33990
326°	35629
341°	37269

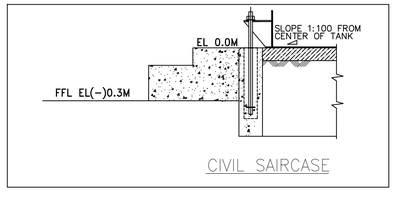

CIVIL SAIRCASE

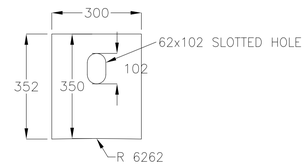

TOP PLATE AC01Aa DETAIL

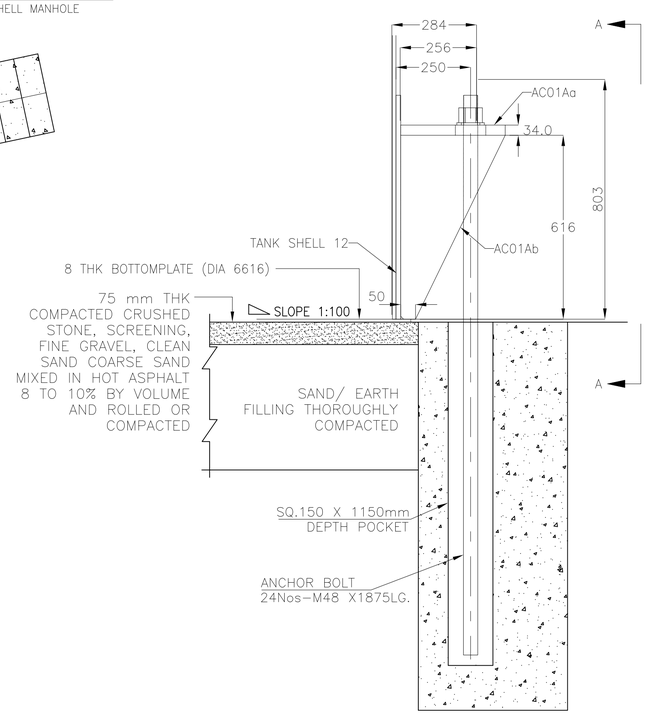

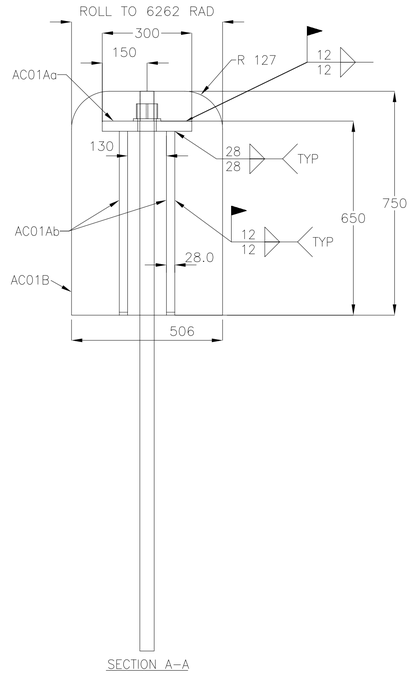

SECTION A−A

REV	DESCRIPTION	BY	DATE	APPROVED
0				

REVISIONS

NTPC DRG No.	9587−109−PVM−B−143		
PS−PEM	OWNER: NTPC LIMITED LARA SUPER THERMAL POWER PROJECT STAGE−II (2x800MW)		
DRAWN/DATE PK/09−09−2024	GENERAL ARRANGEMENT AND LOAD DATA OF LIMESTONE SLURRY TANK # A		
CHECKED/DATE PK/09−09−2024			
APPROVED/DATE SR/09−09−2024	JOB NO. 508	DWG NO. PE−DG−508−167−A105	REV. 0
SCALE: N.T.S	THE INFORMATION ON THIS DOCUMENT IS THE PROPERTY OF BHARAT HEAVY ELECTRICALS LIMITED. IT MUST NOT BE USED DIRECTLY OR INDIRECTLY IN ANY WAY DETRIMENTAL TO THE INTEREST OF THE COMPANY.	SH. 3 OF 3	

DESIGN PARAMETERS

GOVERNING STANDARD: API-650	DESIGN INTERNAL PRESSURE: 0.62 kPa	METAL TEMPERATURE: MIN. DESIGN TEMP.: 15 °C DESIGN TEMP.: 55 °C	C.A. SHELL: 1.5 mm	RADIOGRAPH: SPOT PER CODE	
EDITION: 13TH EDITION	DESIGN EXTERNAL PRESSURE: 0.25 kPa	JOINT EFFICIENCY: SHELL: 0.85 ROOF: 0.85 BOTTOM: 0.85	C.A. BOTTOM: 1.5 mm	ANCHORAGE: YES	
APPENDIX(ICS): A, E, F	SPECIFIC GRAVITY: 1.215	BOTTOM SEAMS: BW	C.A. ROOF: 1.5 mm	WINDGIRDER: NONE	
CAPACITY TO TOP OF SHELL: 1718 m^3	WIND: E= C I= 1 V= 169.49 km/h	FIXED ROOF SEAMS: BW	C.A. STRUCTURE: 1.5 mm	WORKING CAPACITY: 1558 m^3	
DESIGN LIQUID LEVEL: 12.9 m	SEISMIC: SUG= 2 SC= D Av= 0.2763 TL= 4 Sp= 0.16	FLOATING ROOF SEAMS: --	NET WORKING CAPACITY: 1435 m^3	DESIGN BY: PK	DATE 30-Aug-2024
MAX OPERATING TEMPERATURE: 45 °C	ALLOWABLE STRESS: 145 MPa	SHELL SEAMS DBW		CHECK BY: SR	DATE 30-Aug-2024

TANK WEIGHTS:
WEIGHT OF TANK, EMPTY : 76000 KG
WEIGHT OF TANK WITH FULL OF PRODUCT (SG = 1.215) : 2163370 KG
SEISMIC MOMENT (RING-WALL) : 16,211,766.42 N-M
SEISMIC MOMENT (SLAB) : 21,390,205.61 N-M
WIND MOMENT : 1972 KN-M
SEISMIC BASE SHEAR : 221 KN/M

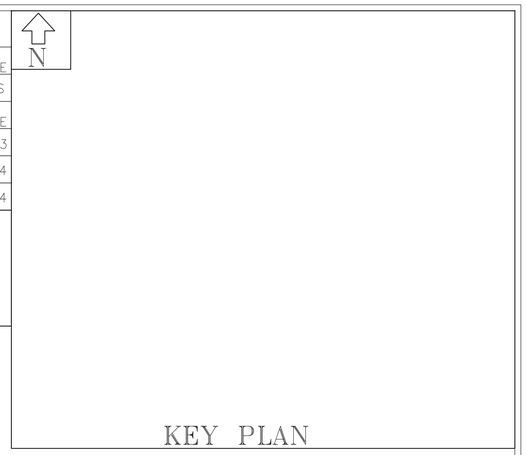

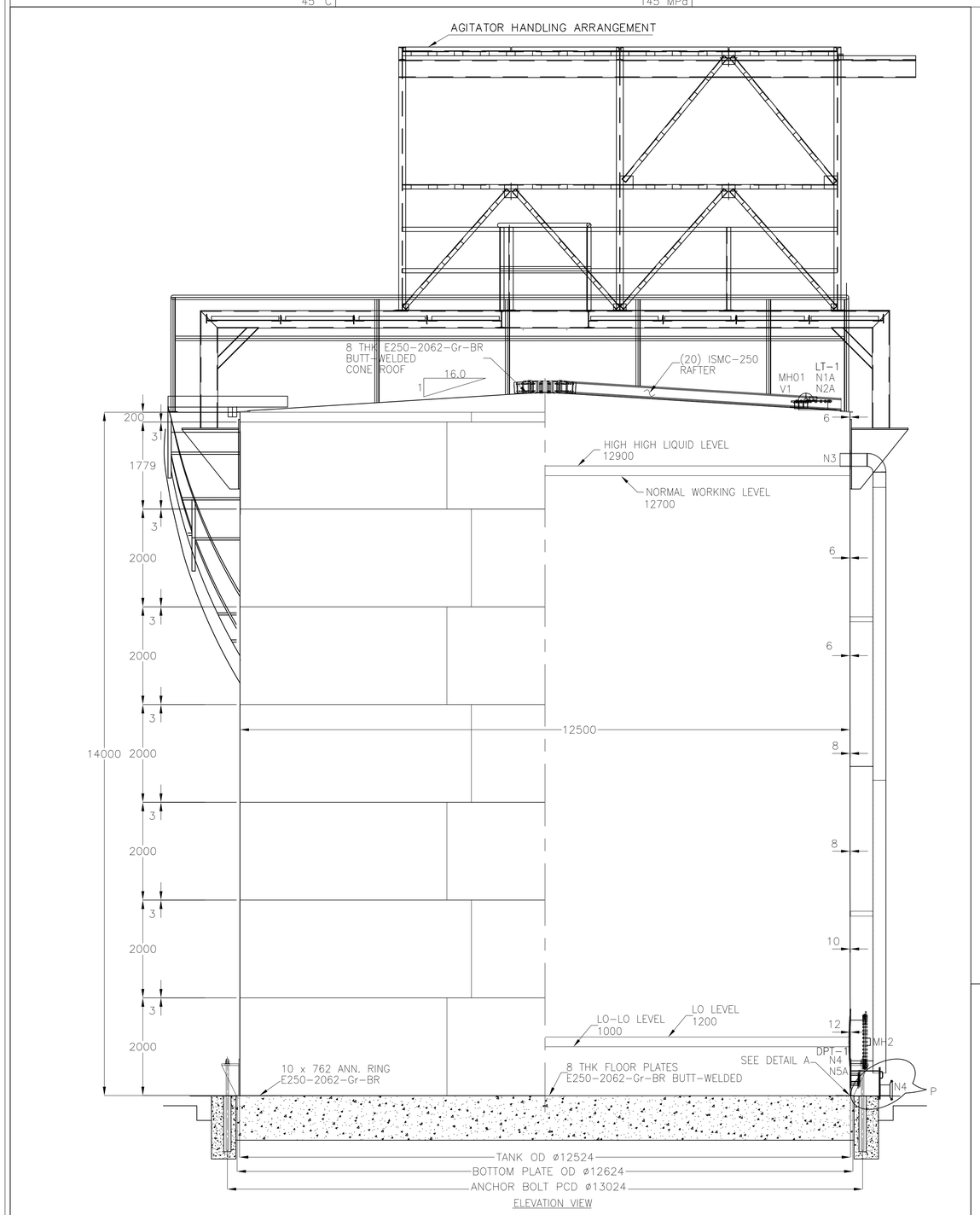

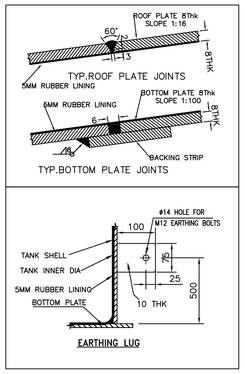

PAINTING SPECIFICATION			
DESCRIPTION	INTERNAL	EXTERNAL	Underneath
SURFACE PREPARATION	BLAST CLEANING TO SA 2.5(NEAR WHITE METAL WITH SURFACE PROFILE 35-50µM		WIRE BRUSH CLEANING
PRIMER	TWO COAT OF Red Oxide Zinc Phosphate Primer to IS: 12744 DFT- 30µ. EACH	Primer coat shall consist of epoxy resin based zinc phosphate primer having minimum DFT of 100 microns.	2 Coats of High Build Coal Tar Epoxy suitably Pigmented, DFT:80-100 microns each Coat.
INTERMEDATE COAT	NA	Intermediate coat (or under coat) shall consist of epoxy resin based paint pigmented with Titanium dioxide with minimum DFT of 100 microns.	
FINAL COAT	5MM THICK OF BEST QUALITY CHLORO/BROMO BUTYL RUBBER LINING WITH HARDNESS 55±5(SHORE A HARDNESS)	Top coat shall consist of one coat of epoxy paint suitable pigmented of approved shade and colour with glossy finish and DFT of 75 microns. Additionally finishing coat of polyurethane of minimum DFT of 25 microns shall be provided.	
TOTAL DFT	60	300	160-200

NOTES:
1. ALL DIMENSIONS ARE IN MM. ELEVATIONS ARE IN METER UNLESS OTHERWISE SPECIFIED.
2. ELEVATION 0.00 IS THE GROUND FLOOR LEVEL FOR POWER HOUSE BUILDING WHICH CORRESPONDS TO RL (+)209.50M.
4. NOZZLE PROJECTIONS ARE MEASURED FROM TANK SHELL INNER TO FLANGE FACE AS APPLICABLE.
5. ALL REINFORCEMENT PADS SHALL BE PROVIDED WITH 6MM TELLTALE HOLE.
6. ALL BOLT HOLES SHALL BE STRADDLE VERTICAL CENTERLINES ON SHELL AND RADIAL CENTERLINES ON ROOF.
7. ALL PROTRUSIONS, SHARP EDGES AND SPATTER ETC. SHALL BE REMOVED FROM THE SURFACE AND ALL WELDS GROUND SMOOTH WITHOUT ANY CAVITES AND IMPERFECTION BEFORE LINING.
8. LINING SHALL BE CARRIED OUT AFTER HYDRO TEST.
9. ALL LONGITUDINAL WELDS SHALL BE STAGGERED.
10. BOTTOM PLATE SHALL UNIFORMLY REST ON FOUNDATION.
11. THE MINIMUM SIZE OF THE WELD SHALL BE EQUAL TO THE THICKNESS OF THINNER MEMBER JOINT UNLESS SPECIFIED OTHERWISE.
12. GROUNDING LUGS SHALL BE WELDED TO THE TANK BODY AT SITE TO SUIT SITE REQUIREMENT.
13. PAINTING SHALL BE AS PER APPROVED PAINTING SCHEDULE.
14. PAD PLATES SHALL BE PROVIDED ON THE TANK FOR SUPPORTING PIPES AND CABLE TRAYS.
15. ALL JOINTS OF BOTTOM PLATES ARE BUTT WELDED WITH BACKING STRIP.
16. ALL JOINTS OF ROOF PLATES ARE BUTT WELDED.
17. ALL JOINTS OF SHELL PLATES ARE DOUBLE WELDED BUTT JOINTS.
18. THREE PLATES JOINT SHALL NOT BE CLOSER THAN 300MM FROM EACH OTHER.
19. ALL FILLET WELDS SHALL BE 6MM UNLESS OTHERWISE SPECIFIED.
20. ALL HANDRAILS, FLAT AND TOE PLATE OF THE STAIRCASE SHALL BE BEND TO SUIT OUTSIDE RADIUS OF TANK DIAMETER.
22. GRATING SHALL BE HOT DIP GALVANIZED IN ACCORDANCE WITH IS: 2629 AND TESTED AS PER IS: 2633 AND 6745. QUANTITY OF ZINC COATING SHALL BE MIM 900 GM/ M2 OF SURFACE AREA (0.12MM UNIFORM THK)
23. EVERY CROSS BAR AND MAIN MEMBER SHALL BE WELDED WITH END FLATS.
24. RUBBER LINING STANDARD IS IS 4682 PART (EQUIVALENT TO BS 6374 PART V)
25. ALL WELDING TO BE COMPLETED BEFORE STARTING THE RUBBER LINING.
26. RAFTERS TO BE WELDED ON THE TOP OF ROOF FOR ENABLING RUBBER LINING INSIDE ROOF SURFACE.

REFERENCE DRAWINGS:-
1. PROCESS P&I DIAGRAM OF LIMESTONE SLURRY TANK : 9587-001-109-PVM-F-001
2. PLOT PLAN : 9587-001-301-POC-F-001

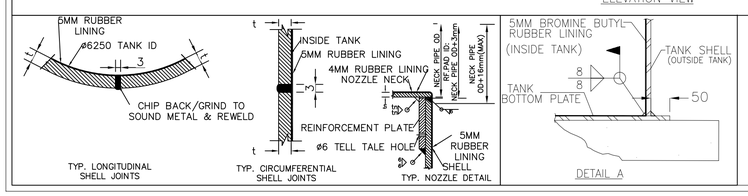

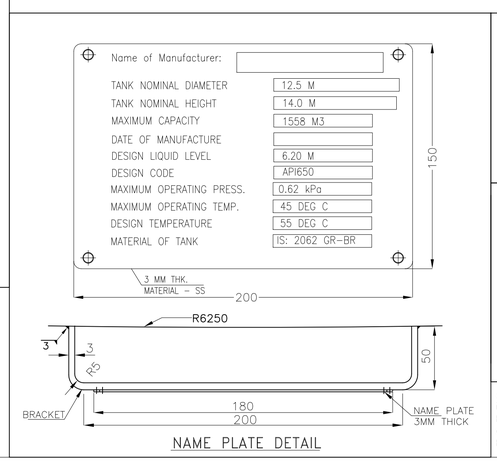

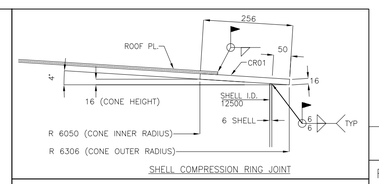

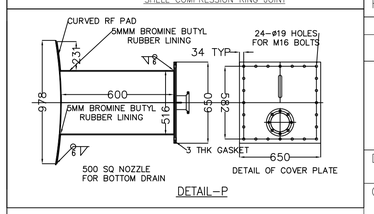

ALL THE REQUIREMENTS SHOWN UNDER GA DRAWING ARE BARE MINIMUM, ANY OTHER ITEM FOUND APPLICABLE DURING DETAILED ENGINEERING AS PER TECHNICAL SPECIFICATION/DESIGN CALCULATION/ FUNCTIONAL REQUIREMENT SHALL BE SUPPLIEDBY BIDDER WITHOUT ANY COMMERCIAL IMPLICATION TO BHEL.

All the requirement shown under GA drwg are bar minimum, any other item found applicable during detailed engineering as per Technical Specification / Design Calculation/ Functional Requirement , shall be supplied by bidder without any commercial implication to BHEL.

REV	DESCRIPTION	BY	DATE	APPROVED
0				

REVISIONS

NTPC DRG No.	9587-109-PVM-B-143
PS-PEM	OWNER: NTPC LIMITED LARA SUPER THERMAL POWER PROJECT STAGE-II (2x800MW)
DRAWN/DATE PK/09-09-2024	GENERAL ARRANGEMENT AND LOAD DATA OF LIMESTONE SLURRY TANK # B
CHECKED/DATE PK/09-09-2024	
APPROVED/DATE SR/09-09-2024	JOB NO. 508 / DWG NO. PE-DG-508-167-A105 / REV. 0
SCALE: N.T.S	

THE INFORMATION ON THIS DOCUMENT IS THE PROPERTY OF BHARAT HEAVY ELECTRICALS LIMITED. IT MUST NOT BE USED DIRECTLY OR INDIRECTLY IN ANY WAY DETRIMENTAL TO THE INTEREST OF THE COMPANY.

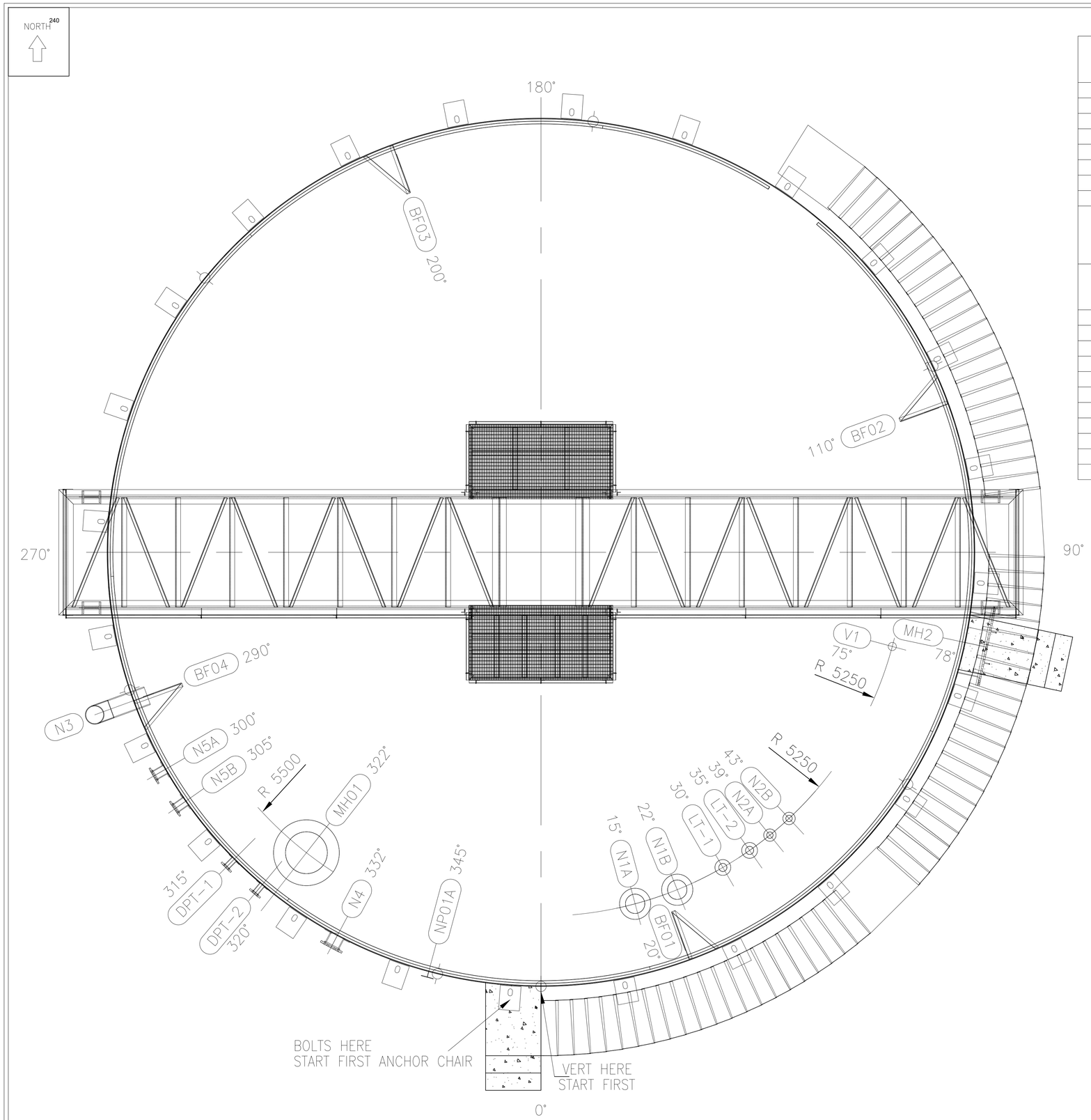

PLAN VIEW APPURTENANCE

DESCRIPTION	CUSTOM MARK	FLANGE TYPE, RATING	NOZZLE THICKNESS	SIZE	OUTSIDE PROJECTION	HORZ. RADIUS FROM CENTER OF TANK ROOF	ORIENTATION FROM TANK NORTH (0°)
ROOF MANWAY	MH-1	PL. 6	6.0	600NB	150	5500	322°
LIQUID INLET-1	N1A	150# F.F. S.O.	6.35	250NB	150	5250	22°
LIQUID INLET-2	N1B	150# F.F. S.O.	6.35	250NB	150	5250	15°
MINIMUM FLOW	N2A	150# F.F. S.O.	5.49	80NB	150	5250	39°
MINIMUM FLOW	N2B	150# F.F. S.O.	5.49	80NB	150	5250	43°
LEVEL TRANSMITTER-1	LT-1	150# F.F. S.O.	5.49	80NB	150	5250	30°
LEVEL TRANSMITTER-2	LT-2	150# F.F. S.O.	5.49	80NB	150	5250	35°
GOOSENECK ROOF VENT	V1	150# F.F. S.O.	6.02	100NB	150	5250	75°

ELEVATION VIEW APPURTENANCE

DESCRIPTION	CUSTOM MARK	FLANGE TYPE, RATING	NOZZLE THICKNESS	SIZE	OUTSIDE PROJECTION	ELEVATION FROM BOTTOM PLATE	ORIENTATION FROM TANK NORTH (0°)
BAFFLE WALL	BF-1	--	--	--	--	0	20°
BAFFLE WALL	BF-2	--	--	--	--	0	110°
BAFFLE WALL	BF-3	--	--	--	--	0	200°
BAFFLE WALL	BF-4	--	--	--	--	0	290°
PIPE OVERFLOW	N3	150# F.F. S.O.	12.7	250NB	600	13024	290°
SHELL MANWAY	MH-2	PL. 25	10.0	900NB	300	1100	78°
BOTTOM DRAIN	N4	150# F.F. S.O.	12.7	200NB	200	350	332°
SUCTION NOZZLE-1	N5A	150# F.F. S.O.	12.7	125NB	200	350	300°
SUCTION NOZZLE-2	N5B	150# F.F. S.O.	12.7	125NB	200	350	305°
DIFF PRESSURE TRANSMITTER-1	DPT-1	150# F.F. S.O.	7.62	80NB	175	250	315°
DIFF PRESSURE TRANSMITTER-2	DPT-2	150# F.F. S.O.	7.62	80NB	175	250	320°

NOTES:

1.- ELEVATIONS SHOWN FROM TOP OF TANK BOTTOM AT THE LOCATION OF THE APPURTENANCE.

MATERIAL SPECIFICATION

ITEM	MATERIAL
PLATES FOR SHELL, BOTTOM & ROOF	IS: 2062 GR. E250 BR
NOZZLE	50NB TO 150NB - IS:1239 ERW, 150NB AND ABOVE - IS: 3589 GR.410 ERW
MANHOLE	IS: 2062 GR. E250 BR
NOZZLE FLANGES	IS:2062 GR.E250 BR SOFF ASME B16.5 CL.150 FOR 25NB TO 600NB IS:2062 GR.E250 BR SOFF AWWA-C207 CL.D FOR 650NB TO 1800NB
HAND RAILING	IS: 1239 (MEDIUM GRADE), GALVANIZED AS PER IS: 4736
GASKETS	BUTYL RUBBER
BOLTING (NUTS & BOLTS)	SA 193 GR.B7 & SA 194 GR.2H
STRUCTURALS	IS: 2062 GR.A/B
FITTINGS	25NB TO 50NB - SA 105, SW, 65 NB TO 500NB - SA 234 WPB ASME-B16.9 (BW)
TREADS & PLATFORM GRATING	IS:2062 GR-A (GRATINGS SHALL BE ELECTRO FORGED TYPES. MINIMUM THICKNESS OF THE GRATING SHALL BE 32 MM. THE OPENING SIZE SHALL NOT BE MORE THAN 30MMX100MM. ALL GRATING SHALL BE HOT DIP GALVANIZED AT THE RATE OF 610 G PER SQ. M. AFTER SURFACE PREPARATION BY MEANS OF BLAST CLEANING/ ACID PICKLING.)
RF PAD PLATE & GUSSETS	IS: 2062 GR. E250 BR
EARTHING LUG	IS: 2062 GR. E250 BR
ANCHOR BOLT	IS: 2062 GR. E250 A
INSIDE LINING	5MM THICK OF BEST QUALITY CHLORO/BROMO BUTYL RUBBER LINING WITH HARDNESS 55(±)5(SHORE A HARDNESS)

REV	DESCRIPTION	BY	DATE	APPROVED
0				

REVISIONS

NTPC DRG No. 9587-109-PVM-B-143

PS-PEM

OWNER: NTPC LIMITED
LARA SUPER THERMAL POWER PROJECT
STAGE-II (2x800MW)

GENERAL ARRANGEMENT AND LOAD DATA OF LIMESTONE SLURRY TANK # B

DRAWN/DATE PK/09-09-2024

CHECKED/DATE PK/09-09-2024

APPROVED/DATE SR/09-09-2024

JOB NO. 508

DWG NO. PE-DG-508-167-A105

REV. 0

SCALE: N.T.S

THE INFORMATION ON THIS DOCUMENT IS THE PROPERTY OF BHARAT HEAVY ELECTRICALS LIMITED. IT MUST NOT BE USED DIRECTLY OR INDIRECTLY IN ANY WAY DETRIMENTAL TO THE INTEREST OF THE COMPANY.

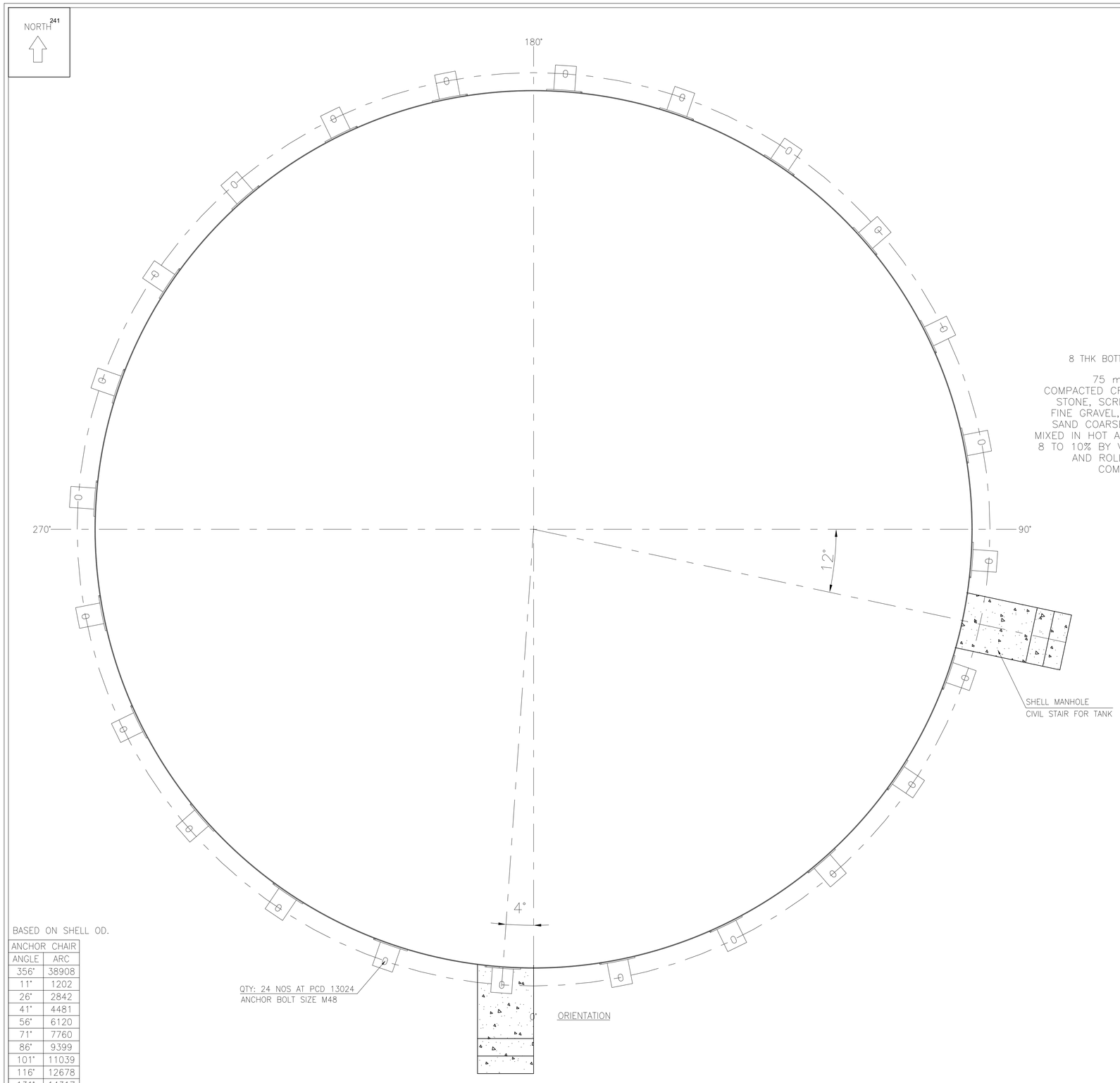

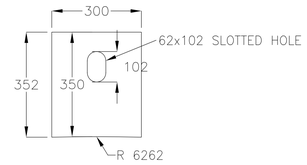

TOP PLATE AC01Aa DETAIL

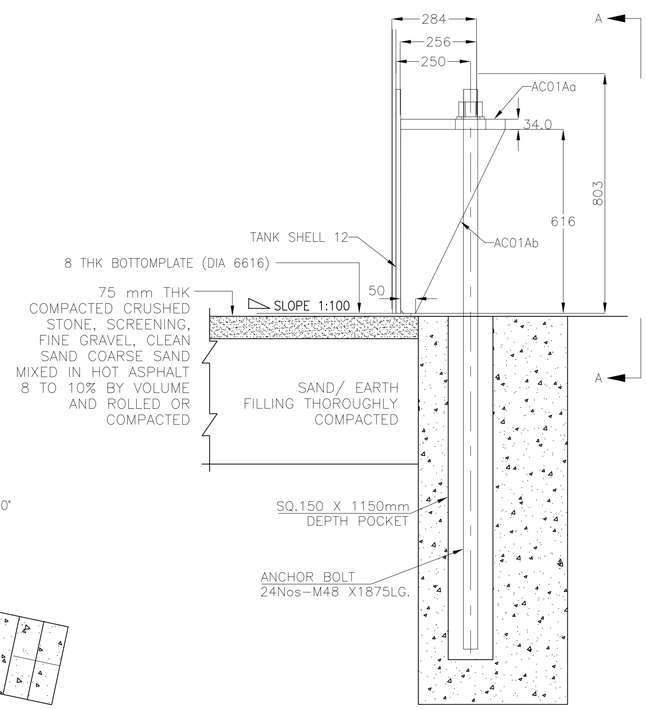

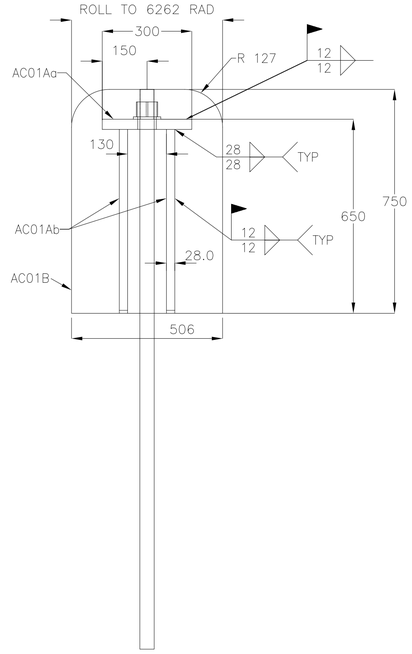

SECTION A-A

BASED ON SHELL OD.

ANCHOR ANGLE	CHAIR ARC
356°	38908
11°	1202
26°	2842
41°	4481
56°	6120
71°	7760
86°	9399
101°	11039
116°	12678
131°	14317
146°	15957
161°	17596
176°	19235
191°	20875
206°	22514
221°	24154
236°	25793
251°	27432
266°	29072
281°	30711
296°	32351
311°	33990
326°	35629
341°	37269

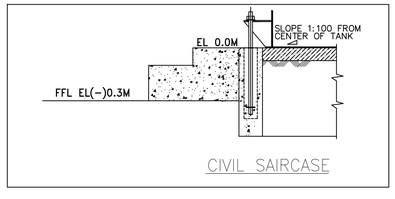

CIVIL SAIRCASE

REV	DESCRIPTION	BY	DATE	APPROVED
0				

REVISIONS

NTPC DRG No. 9587-109-PVM-B-143

PS-PEM

OWNER: NTPC LIMITED
LARA SUPER THERMAL POWER PROJECT
STAGE-II (2x800MW)

GENERAL ARRANGEMENT AND LOAD DATA OF LIMESTONE SLURRY TANK # B

DRAWN/DATE PK/09-09-2024

CHECKED/DATE PK/09-09-2024

APPROVED/DATE SR/09-09-2024

JOB NO. 508

DWG NO. PE-DG-508-167-A105

REV. 0

SCALE: N.T.S

THE INFORMATION ON THIS DOCUMENT IS THE PROPERTY OF BHARAT HEAVY ELECTRICALS LIMITED. IT MUST NOT BE USED DIRECTLY OR INDIRECTLY IN ANY WAY DETRIMENTAL TO THE INTEREST OF THE COMPANY.

SH. 3 OF 3

DESIGN PARAMETERS

GOVERNING STANDARD: API-650	DESIGN INTERNAL PRESSURE: 0.62 kPa	METAL TEMPERATURE: MIN. DESIGN TEMP.: 15 °C DESIGN TEMP.: 55 °C	C.A. SHELL: 1.5 mm	RADIOGRAPH: SPOT PER CODE
EDITION: 13TH EDITION	DESIGN EXTERNAL PRESSURE: 0.25 kPa	JOINT EFFICIENCY: SHELL: 0.85 ROOF: 0.85 BOTTOM: 0.85	C.A. BOTTOM: 1.5 mm	ANCHORAGE: YES
APPENDIX(ICS): A, E, F	SPECIFIC GRAVITY: 1.217	BOTTOM SEAMS: BW	C.A. ROOF: 1.5 mm	WINDGIRDER: NONE
CAPACITY TO TOP OF SHELL: 1924 m^3	WIND: E= C I= 1 V= 169.49 km/h	FIXED ROOF SEAMS: BW	C.A. STRUCTURE: 1.5 mm	WORKING CAPACITY: 1791 m^3
DESIGN LIQUID LEVEL: 13.5 m	SEISMIC: SUG= 2 SC= D Av= 0.2763 TL= 4 Sp= 0.16	FLOATING ROOF SEAMS: --	NET WORKING CAPACITY: 1632 m^3	DESIGN BY: PK DATE 30-Aug-2024
MAX OPERATING TEMPERATURE: 45 °C	ALLOWABLE STRESS: 145 MPa	SHELL SEAMS DBW		CHECK BY: SR DATE 30-Aug-2024

TANK WEIGHTS:
WEIGHT OF TANK, EMPTY : 72000 KG
WEIGHT OF TANK WITH FULL OF PRODUCT (SG = 1.217) : 22413508 KG
SEISMIC MOMENT (RING-WALL) : 19130 KN-M
SEISMIC MOMENT (SLAB) : 25324 KN-M
WIND MOMENT : 2010 KN-M
SEISMIC BASE SHEAR : 163 KN/M

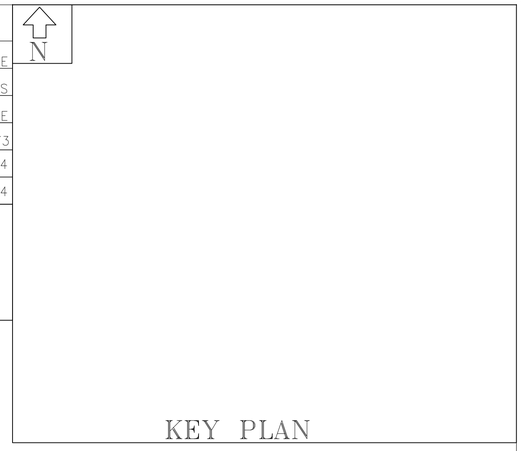

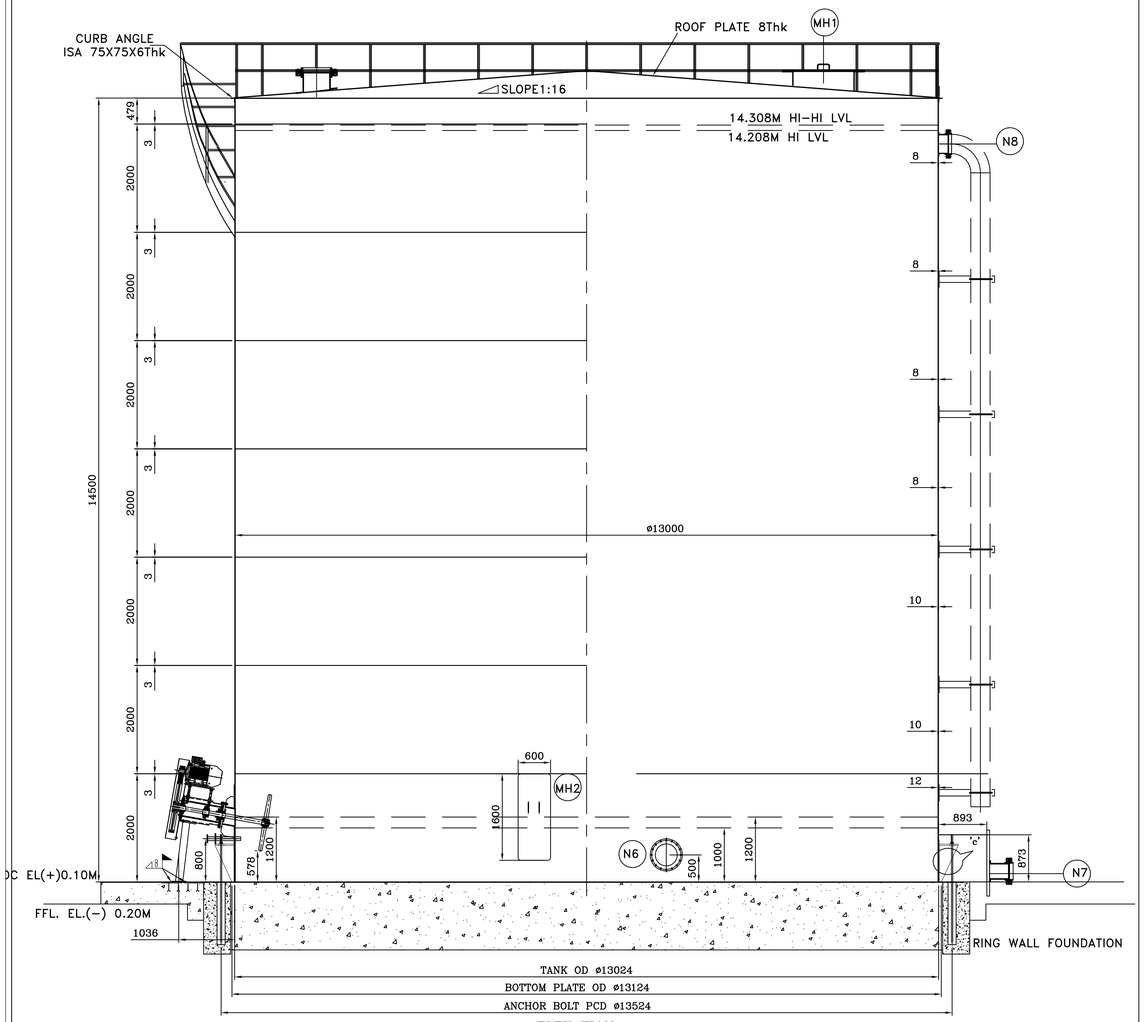

ELEVATION

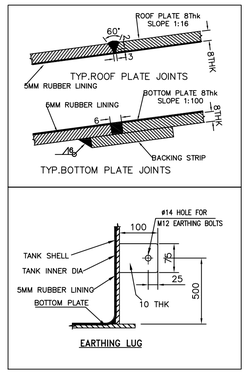

EARTHING LUG

NOTES:
1. ALL DIMENSIONS ARE IN MM. ELEVATIONS ARE IN METER UNLESS OTHERWISE SPECIFIED.
2. ELEVATION 0.00 IS THE GROUND FLOOR LEVEL FOR POWER HOUSE BUILDING WHICH CORRESPONDS TO RL (+)209.50M.
4. NOZZLE PROJECTIONS ARE MEASURED FROM TANK SHELL INNER TO FLANGE FACE AS APPLICABLE.
5. ALL REINFORCEMENT PADS SHALL BE PROVIDED WITH 6MM TELLTALE HOLE.
6. ALL BOLT HOLES SHALL BE STRADDLE VERTICAL CENTERLINES ON SHELL AND RADIAL CENTERLINES ON ROOF.
7. ALL PROTRUSIONS, SHARP EDGES AND SPATTER ETC. SHALL BE REMOVED FROM THE SURFACE AND ALL WELDS GROUND SMOOTH WITHOUT ANY CAVITES AND IMPERFECTION BEFORE LINING.
8. LINING SHALL BE CARRIED OUT AFTER HYDRO TEST.
9. ALL LONGITUDINAL WELDS SHALL BE STAGGERED.
10. BOTTOM PLATE SHALL UNIFORMLY REST ON FOUNDATION.
11. THE MINIMUM SIZE OF THE WELD SHALL BE EQUAL TO THE THICKNESS OF THINNER MEMBER JOINT UNLESS SPECIFIED OTHERWISE.
12. GROUNDING LUGS SHALL BE WELDED TO THE TANK BODY AT SITE TO SUIT SITE REQUIREMENT.
13. PAINTING SHALL BE AS PER APPROVED PAINTING SCHEDULE.
14. PAD PLATES SHALL BE PROVIDED ON THE TANK FOR SUPPORTING PIPES AND CABLE TRAYS.
15. ALL JOINTS OF BOTTOM PLATES ARE BUTT WELDED WITH BACKING STRIP.
16. ALL JOINTS OF ROOF PLATES ARE BUTT WELDED.
17. ALL JOINTS OF SHELL PLATES ARE DOUBLE WELDED BUTT JOINTS.
18. THREE PLATES JOINT SHALL NOT BE CLOSER THAN 300MM FROM EACH OTHER.
19. ALL FILLET WELDS SHALL BE 6MM UNLESS OTHERWISE SPECIFIED.
20. ALL HANDRAILS, FLAT AND TOE PLATE OF THE STAIRCASE SHALL BE BEND TO SUIT OUTSIDE RADIUS OF TANK DIAMETER.
22. GRATING SHALL BE HOT DIP GALVANIZED IN ACCORDANCE WITH IS: 2629 AND TESTED AS PER IS: 2633 AND 6745. QUANTITY OF ZINC COATING SHALL BE MIM 900 GM/ M2 OF SURFACE AREA (0.12MM UNIFORM THK)
23. EVERY CROSS BAR AND MAIN MEMBER SHALL BE WELDED WITH END FLATS.
24. RUBBER LINING STANDARD IS IS 4682 PART (EQUIVALENT TO BS 6374 PART V)
25. ALL WELDING TO BE COMPLETED BEFORE STARTING THE RUBBER LINING.
26. RAFTERS TO BE WELDED ON THE TOP OF ROOF FOR ENABLING RUBBER LINING INSIDE ROOF SURFACE.

PAINTING SPECIFICATION

DESCRIPTION	INTERNAL	EXTERNAL	Underneath
SURFACE PREPARATION	BLAST CLEANING TO SA 2.5(NEAR WHITE METAL WITH SURFACE PROFILE 35-50µM		WIRE BRUSH CLEANING
PRIMER	TWO COAT OF Red Oxide Zinc Phosphate Primer to IS: 12744 DFT- 30µ. EACH	Primer coat shall consist of epoxy resin based zinc phosphate primer having minimum DFT of 100 microns.	2 Coats of High Build Coal Tar Epoxy suitably Pigmented, DFT:80-100 microns each Coat.
INTERMEDATE COAT	NA	Intermediate coat (or under coat) shall consist of epoxy resin based paint pigmented with Titanium dioxide with minimum DFT of 100 microns.	
FINAL COAT	5MM THICK OF BEST QUALITY CHLORO/BROMO BUTYL RUBBER LINING WITH HARDNESS 55±5(SHORE A HARDNESS)	Top coat shall consist of one coat of epoxy paint suitable pigmented of approved shade and colour with glossy finish and DFT of 75 microns. Additionally finishing coat of polyurethane of minimum DFT of 25 microns shall be provided.	
TOTAL DFT	60	300	160-200

REFERENCE DRAWINGS:-
1. PROCESS P&I DIAGRAM OF AUXILIARY ABSORBENT TANK : 9587-001-109-PVM-F-001
2. PLOT PLAN : 9587-001-301-POC-F-001

All the requirement shown under GA drwg are bar minimum, any other item found applicable during detailed engineering as per Technical Specification / Design Calculation/ Functional Requirement , shall be supplied by bidder without any commercial implication to BHEL.

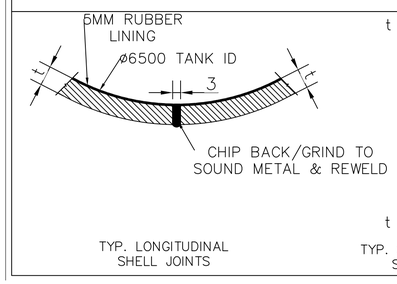

TYP. LONGITUDINAL SHELL JOINTS

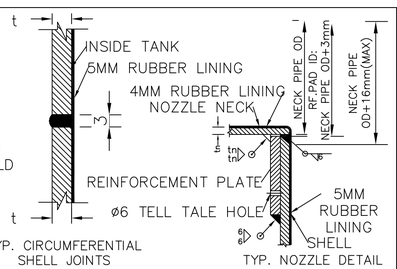

TYP. CIRCUMFERENTIAL SHELL JOINTS

TYP. NOZZLE DETAIL

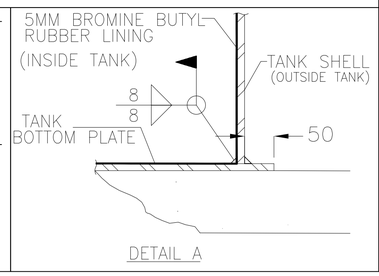

DETAIL A

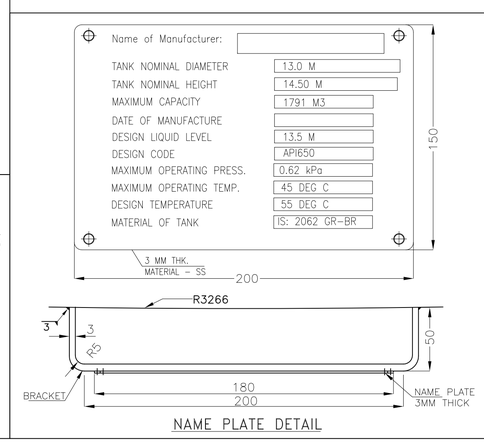

NAME PLATE DETAIL

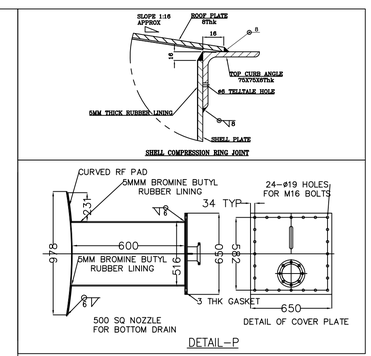

ALL THE REQUIREMENTS SHOWN UNDER GA DRAWING ARE BARE MINIMUM, ANY OTHER ITEM FOUND APPLICABLE DURING DETAILED ENGINEERING AS PER TECHNICAL SPECIFICATION/DESIGN CALCULATION/ FUNCTIONAL REQUIREMENT SHALL BE SUPPLIEDBY BIDDER WITHOUT ANY COMMERCIAL IMPLICATION TO BHEL.

REV	DESCRIPTION	BY	DATE	APPROVED
0				

REVISIONS

NTPC DRG No.	9587-109-PVM-B-143
PS-PEM	OWNER: NTPC LIMITED LARA SUPER THERMAL POWER PROJECT STAGE-II (2x800MW)
DRAWN/DATE PK/09-09-2024	GENERAL ARRANGEMENT AND LOAD DATA OF AUXILIARY ABSORBENT TANK
CHECKED/DATE PK/09-09-2024	
APPROVED/DATE SR/09-09-2024	JOB NO. 508 / DWG NO. PE-DG-508-167-A106 / REV. 0
SCALE: N.T.S	SH. 1 OF 3

THE INFORMATION ON THIS DOCUMENT IS THE PROPERTY OF BHARAT HEAVY ELECTRICALS LIMITED. IT MUST NOT BE USED DIRECTLY OR INDIRECTLY IN ANY WAY DETRIMENTAL TO THE INTEREST OF THE COMPANY.

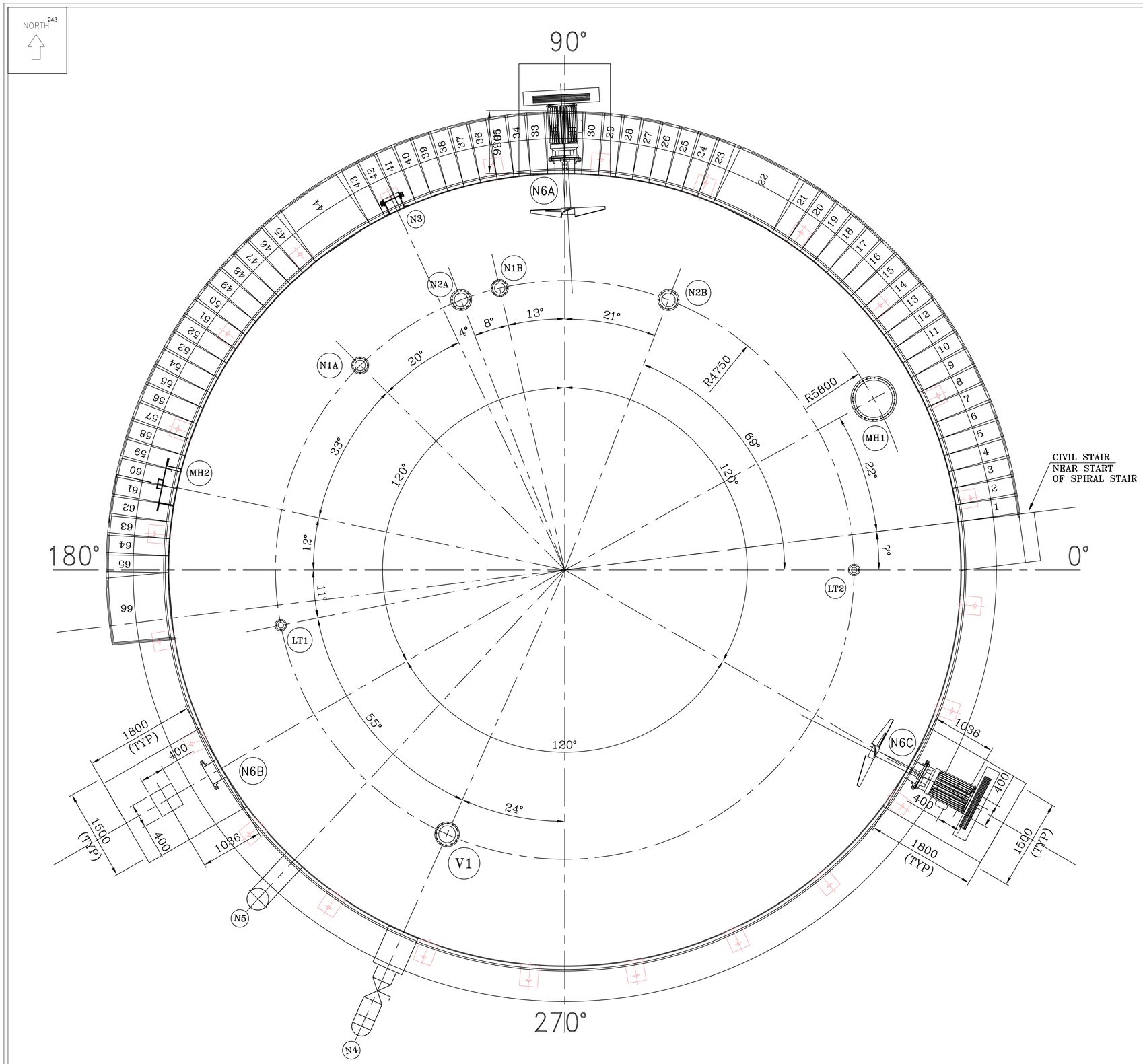

PLAN VIEW APPURTENANCE

DESCRIPTION	CUSTOM MARK	FLANGE TYPE, RATING	NOZZLE THICKNESS	SIZE	OUTSIDE PROJECTION	HORZ. RADIUS FROM CENTER OF TANK ROOF	ORIENTATION FROM TANK NORTH (0°)
ROOF MANWAY	MH-1	AS PER API 650	6.0	600NB	200	5800	29°
LIQUID INLET-1	N1A	150# F.F. S.O.	6.35	200NB	150	4750	135°
LIQUID INLET-2	N1B	150# F.F. S.O.	6.35	200NB	150	4750	103°
MINIMUM FLOW	N2A	150# F.F. S.O.	6.35	250NB	200	4750	111°
MINIMUM FLOW	N2B	150# F.F. S.O.	6.35	250NB	200	4750	69°
LEVEL TRANSMITTER-1	LT-1	150# F.F. S.O.	4.8	100NB	150	4750	191°
LEVEL TRANSMITTER-2	LT-2	150# F.F. S.O.	4.8	100NB	150	4750	0°
GOOSENECK ROOF VENT	V1	150# F.F. S.O.	5.4	150NB	200	4750	246°

ELEVATION VIEW APPURTENANCE

DESCRIPTION	CUSTOM MARK	FLANGE TYPE, RATING	NOZZLE THICKNESS	SIZE	OUTSIDE PROJECTION	ELEVATION FROM BOTTOM PLATE	ORIENTATION FROM TANK NORTH (0°)
BAFFLE WALL	BF-1	--	--	--	--	0	0°
BAFFLE WALL	BF-2	--	--	--	--	0	90°
BAFFLE WALL	BF-3	--	--	--	--	0	180°
BAFFLE WALL	BF-4	--	--	--	--	0	270°
PIPE OVERFLOW	N3	150# F.F. S.O.	12.7	200NB	200	500	115°
BOTTOM DRAIN	N4	150# F.F. S.O.	12.7	200NB	200	300	246°
SUCTION NOZZLE	N5	150# F.F. S.O.	12.7	350NB	250	13700	227°
FLUSH NOZZLE	N6A	150# F.F. S.O.	7.62	80NB	200	800	90°
FLUSH NOZZLE	N6B	150# F.F. S.O.	7.62	80NB	200	800	210°
FLUSH NOZZLE	N6C	150# F.F. S.O.	7.62	80NB	200	800	330°
SHELL MANWAY	MH-2	IS803	12.0	1600x600	200	1000	168°
EARTHING CLIT	EC	AS PER DETAIL	–	–	100	200	315°

NOTES:

1.- ELEVATIONS SHOWN FROM TOP OF TANK BOTTOM AT THE LOCATION OF THE APPURTENANCE.

MATERIAL SPECIFICATION

ITEM	MATERIAL
PLATES FOR SHELL, BOTTOM & ROOF	IS: 2062 GR. E250 BR
NOZZLE	50NB TO 150NB – IS:1239 ERW, 150NB AND ABOVE – IS: 3589 GR.410 ERW
MANHOLE	IS: 2062 GR. E250 BR
NOZZLE FLANGES	IS:2062 GR.E250 BR SOFF ASME B16.5 CL.150 FOR 25NB TO 600NB IS:2062 GR.E250 BR SOFF AWWA-C207 CL.D FOR 650NB TO 1800NB
HAND RAILING	IS: 1239 (MEDIUM GRADE), GALVANIZED AS PER IS: 4736
GASKETS	BUTYL RUBBER
BOLTING (NUTS & BOLTS)	SA 193 GR.B7 & SA 194 GR.2H
STRUCTURALS	IS: 2062 GR.A/B
FITTINGS	25NB TO 50NB – SA 105, SW, 65 NB TO 500NB – SA 234 WPB ASME-B16.9 (BW)
TREADS & PLATFORM GRATING	IS:2062 GR-A (GRATINGS SHALL BE ELECTRO FORGED TYPES. MINIMUM THICKNESS OF THE GRATING SHALL BE 32 MM. THE OPENING SIZE SHALL NOT BE MORE THAN 30MMX100MM. ALL GRATING SHALL BE HOT DIP GALVANIZED AT THE RATE OF 610 G PER SQ. M. AFTER SURFACE PREPARATION BY MEANS OF BLAST CLEANING/ ACID PICKLING.)
RF PAD PLATE & GUSSETS	IS: 2062 GR. E250 BR
EARTHING LUG	IS: 2062 GR. E250 BR
ANCHOR BOLT	IS: 2062 GR. E250 A
INSIDE LINING	5MM THICK OF BEST QUALITY CHLORO/BROMO BUTYL RUBBER LINING WITH HARDNESS 55(±)5(SHORE A HARDNESS)

REV	DESCRIPTION	BY	DATE	APPROVED
0				

REVISIONS

NTPC DRG No. 9587-109-PVM-B-143

भारत हेवी इलेक्ट्रिकल्स लिमिटेड BHEL

PS-PEM

OWNER: NTPC LIMITED
LARA SUPER THERMAL POWER PROJECT
STAGE-II (2x800MW)

GENERAL ARRANGEMENT AND LOAD DATA OF AUXILIARY ABSORBENT TANK

DRAWN/DATE PK/09-09-2024

CHECKED/DATE PK/09-09-2024

APPROVED/DATE SR/09-09-2024

JOB NO. 508

DWG NO. PE-DG-508-167-A106

REV. 0

SCALE: N.T.S

THE INFORMATION ON THIS DOCUMENT IS THE PROPERTY OF BHARAT HEAVY ELECTRICALS LIMITED. IT MUST NOT BE USED DIRECTLY OR INDIRECTLY IN ANY WAY DETRIMENTAL TO THE INTEREST OF THE COMPANY.

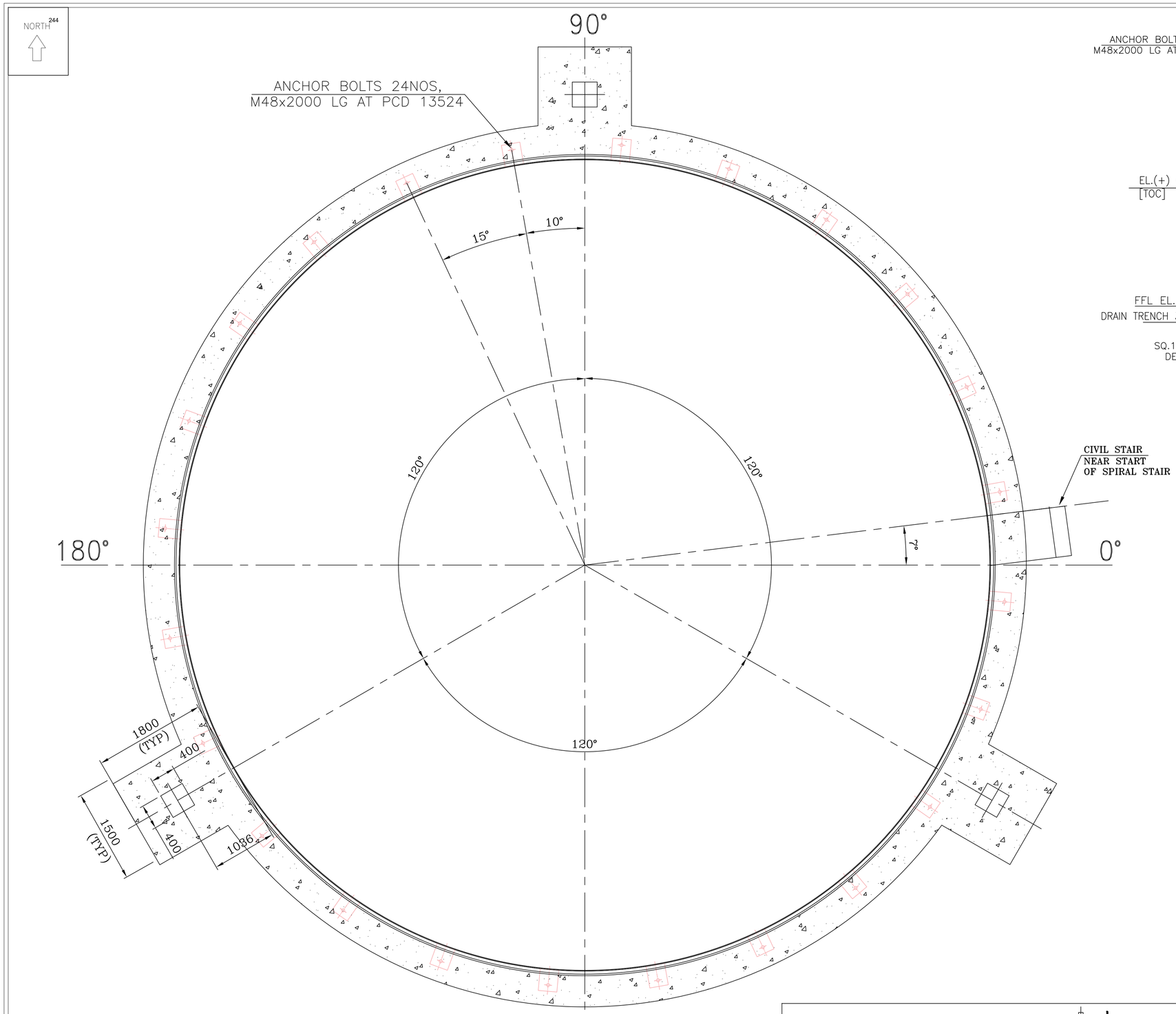

ORIENTATION

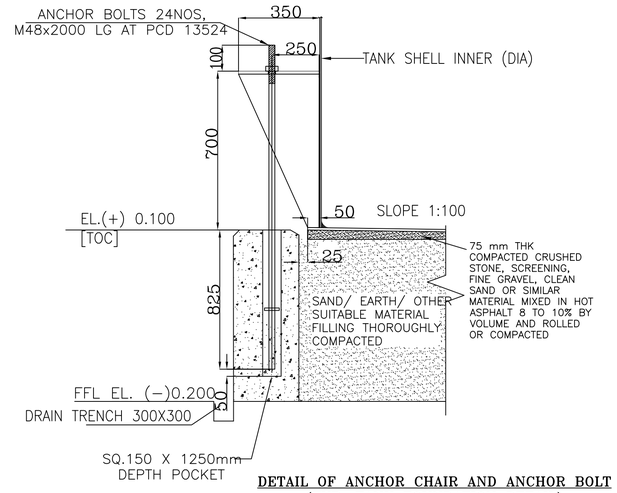

DETAIL OF ANCHOR CHAIR AND ANCHOR BOLT
(TYP. TANK FOUNDATION DETAIL)

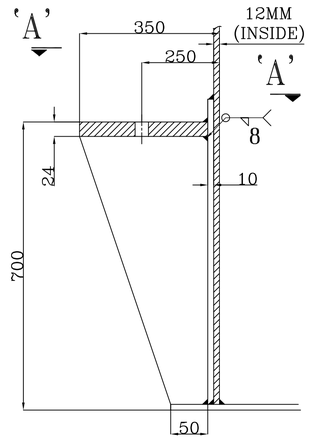

DETAIL-C

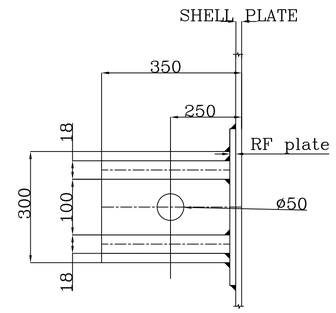

VIEW-'A-A'

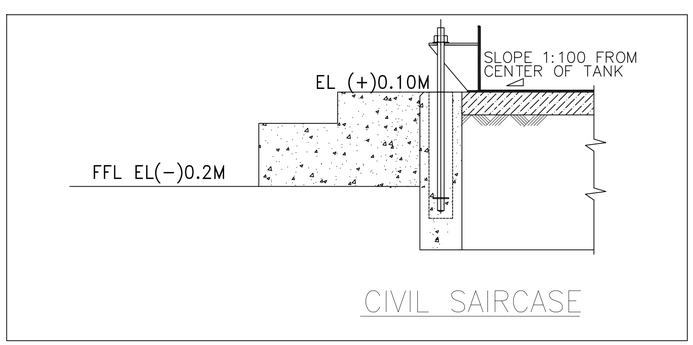

CIVIL SAIRCASE

REV	DESCRIPTION	BY	DATE	APPROVED
0				

REVISIONS

NTPC DRG No.	9587-109-PVM-B-143
PS-PEM	OWNER: NTPC LIMITED LARA SUPER THERMAL POWER PROJECT STAGE-II (2x800MW)
DRAWN/DATE PK/09-09-2024	GENERAL ARRANGEMENT AND LOAD DATA OF AUXILIARY ABSORBENT TANK
CHECKED/DATE PK/09-09-2024	
APPROVED/DATE SR/09-09-2024	JOB NO. 508 / DWG NO. PE-DG-508-167-A106 / REV. 0
SCALE: N.T.S	SH. 3 OF 3

THE INFORMATION ON THIS DOCUMENT IS THE PROPERTY OF BHARAT HEAVY ELECTRICALS LIMITED. IT MUST NOT BE USED DIRECTLY OR INDIRECTLY IN ANY WAY DETRIMENTAL TO THE INTEREST OF THE COMPANY.

DESIGN PARAMETERS

GOVERNING STANDARD: API-650	DESIGN INTERNAL PRESSURE: 0.62 kPa	METAL TEMPERATURE: MIN. DESIGN TEMP.: 15 °C DESIGN TEMP.: 55 °C	C.A. SHELL: 1.5 mm	RADIOGRAPH: SPOT PER CODE	
EDITION: 13TH EDITION	DESIGN EXTERNAL PRESSURE: 0.25 kPa	JOINT EFFICIENCY: SHELL: 0.85 ROOF: 0.85 BOTTOM: 0.85	C.A. BOTTOM: 1.5 mm	ANCHORAGE: YES	
APPENDIX(ICS): A, E, F	SPECIFIC GRAVITY: 1.0	BOTTOM SEAMS: BW	C.A. ROOF: 1.5 mm	WINDGIRDER: NONE	
CAPACITY TO TOP OF SHELL: 135 m^3	WIND: E= C I= 1 V= 169.49 km/h	FIXED ROOF SEAMS: BW	C.A. STRUCTURE: 1.5 mm	WORKING CAPACITY: 123 m^3	
DESIGN LIQUID LEVEL: 5.2 m	SEISMIC: SUG= 2 SC= D Av= 0.2763 TL= 4 Sp= 0.16	FLOATING ROOF SEAMS: --	NET WORKING CAPACITY: 95 m^3	DESIGN BY: PK	DATE 30-Aug-2024
MAX OPERATING TEMPERATURE: 45 °C	ALLOWABLE STRESS: 145 MPa	SHELL SEAMS DBW		CHECK BY: SR	DATE 30-Aug-2024

TANK WEIGHTS:
WEIGHT OF TANK, EMPTY : 10000 KG
WEIGHT OF TANK WITH FULL OF PRODUCT (SG = 1.0) : 145000 KG
SEISMIC MOMENT (RING-WALL) : 452.62 KN-M
SEISMIC MOMENT (SLAB) : 592 KN-M
WIND MOMENT : 1156.15 KN-M
SEISMIC BASE SHEAR : 22.85 KN/M
WIND LOAD : 24.77 KN

All the requirement shown under GA drwg are bar minimum, any other item found applicable during detailed engineering as per Technical Specification / Design Calculation/ Functional Requirement , shall be supplied by bidder without any commercial implication to BHEL.

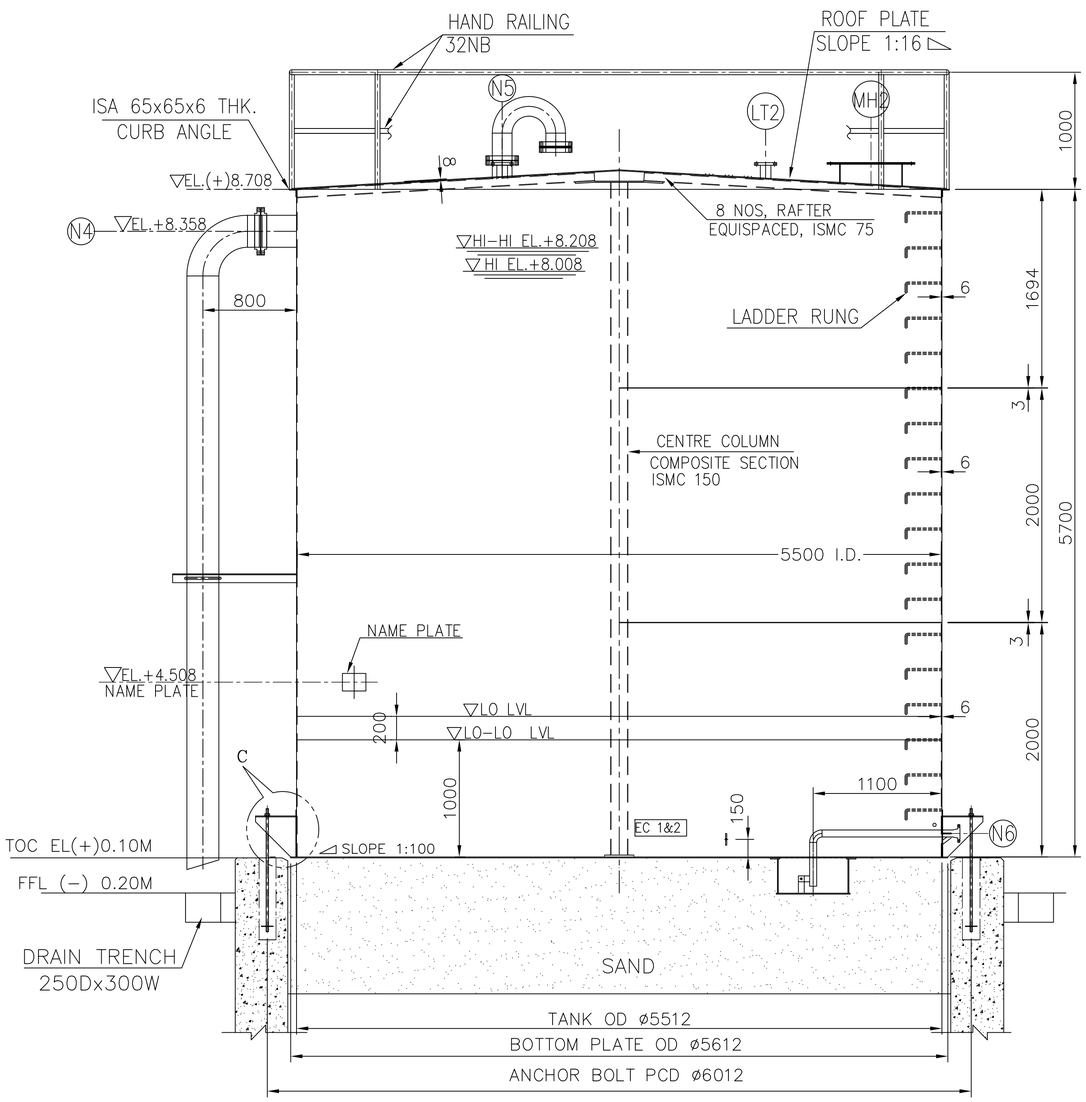

ELEVATION

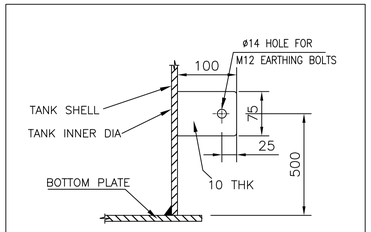

EARTHING LUG

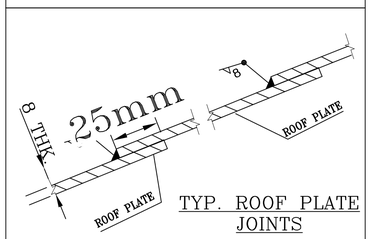

TYP. ROOF PLATE JOINTS

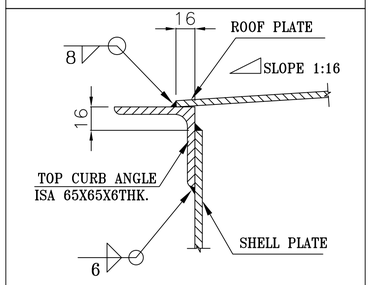

ROOF WELDING DETAIL

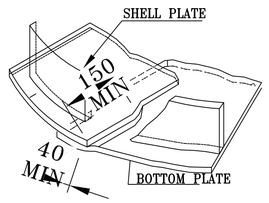

BOTTOM WELDING DETAIL

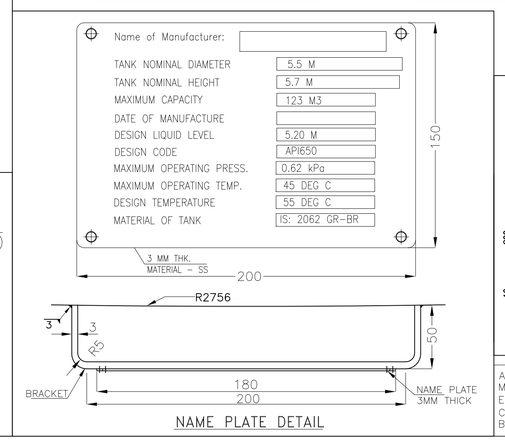

NAME PLATE DETAIL

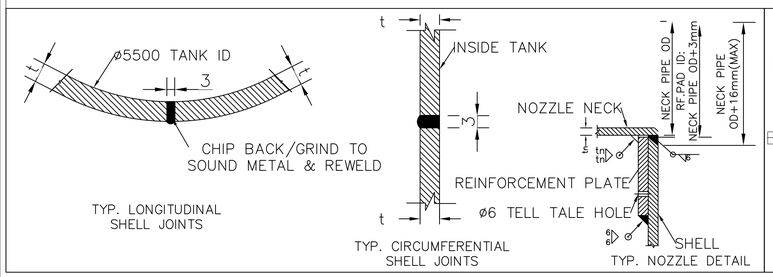

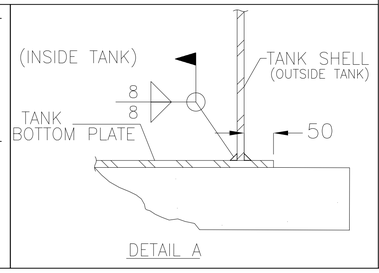

DETAIL A

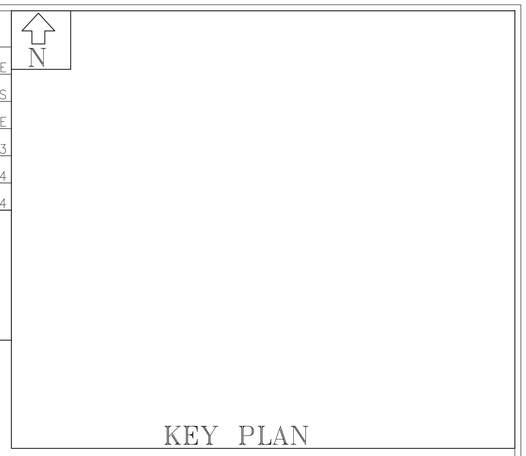

KEY PLAN

NOTES:
1. ALL DIMENSIONS ARE IN MM. ELEVATIONS ARE IN METER UNLESS OTHERWISE SPECIFIED.
2. ELEVATION 0.00 IS THE GROUND FLOOR LEVEL FOR POWER HOUSE BUILDING WHICH CORRESPONDS TO RL (+)209.50M.
4. NOZZLE PROJECTIONS ARE MEASURED FROM TANK SHELL INNER TO FLANGE FACE AS APPLICABLE.
5. ALL REINFORCEMENT PADS SHALL BE PROVIDED WITH 6MM TELLTALE HOLE.
6. ALL BOLT HOLES SHALL BE STRADDLE VERTICAL CENTERLINES ON SHELL AND RADIAL CENTERLINES ON ROOF.
7. ALL PROTRUSIONS, SHARP EDGES AND SPATTER ETC. SHALL BE REMOVED FROM THE SURFACE AND ALL WELDS GROUND SMOOTH WITHOUT ANY CAVITES AND IMPERFECTION BEFORE LINING.
9. ALL LONGITUDINAL WELDS SHALL BE STAGGERED.
10. BOTTOM PLATE SHALL UNIFORMLY REST ON FOUNDATION.
11. THE MINIMUM SIZE OF THE WELD SHALL BE EQUAL TO THE THICKNESS OF THINNER MEMBER JOINT UNLESS SPECIFIED OTHERWISE.
12. GROUNDING LUGS SHALL BE WELDED TO THE TANK BODY AT SITE TO SUIT SITE REQUIREMENT.
13. PAINTING SHALL BE AS PER APPROVED PAINTING SCHEDULE.
14. PAD PLATES SHALL BE PROVIDED ON THE TANK FOR SUPPORTING PIPES AND CABLE TRAYS.
17. ALL JOINTS OF SHELL PLATES ARE DOUBLE WELDED BUTT JOINTS.
18. THREE PLATES JOINT SHALL NOT BE CLOSER THAN 300MM FROM EACH OTHER.
19. ALL FILLET WELDS SHALL BE 6MM UNLESS OTHERWISE SPECIFIED.
20. ALL HANDRAILS, FLAT AND TOE PLATE OF THE STAIRCASE SHALL BE BEND TO SUIT OUTSIDE RADIUS OF TANK DIAMETER.
22. GRATING SHALL BE HOT DIP GALVANIZED IN ACCORDANCE WITH IS: 2629 AND TESTED AS PER IS: 2633 AND 6745. QUANTITY OF ZINC COATING SHALL BE MIM 900 GM/ M2 OF SURFACE AREA (0.12MM UNIFORM THK)
23. EVERY CROSS BAR AND MAIN MEMBER SHALL BE WELDED WITH END FLATS.

PAINTING SCHEDULE

	TANK INSIDE SURFACE	TANK OUTSIDE SURFACE	TANK UNDERNEATH	GRATING AND RAILINGS FOR STAIRS, STAIRCASE
SURFACE PREPARATION	SP3- POWER TOOL CLEANING / SP5 - SHOT BLASTING OR ABRASIVE BLASTING			
PRIMER	TWO COAT OF RED OXIDE ZINC PHOSPHATE IS: 12744 PRIMER COAT - 60µ EACH	ONE COAT OF TWO COMPONENT ZINC (ETHYL) SILICATE PRIMER COAT - 70µ	2 COATS OF HIGH BULD COAL TAR EPOXY SUITABILY PIGMENTED, DFT;80-100 MICRONS EACH COAT	HOT DIP GALVANIZED TO 610GMS/SQ-M (MINIMUM) AND TO A COATING THICKNESS OF 87µ (MINIMUM)
INTERMEDIATE COAT	-	ONE (1) COAT OF TWO COMPONENT POLYAMIDE CURED EPOXY WITH MIO CONTENT - 100µ/ COAT		**2 Coats of High Build Coal Tar Epoxy suitably Pigmented, DFT:80-100 microns each Coat.**
FINISH COAT	EPOXY LINING OF MINIMUM 150 MICRON THICKNESS (3 COATS OF 50 MICRON EACH).	TWO (2) COATS OF TWO PACK ACRYLIC POLYURETHANE PAINT TO IS:13213 - 35µ/ COAT SHADE - GREY WHITE, RAL 9002		
TOTAL DFT	270µ Min.	240µ Min.	160 - 200µ	87µ

REFERENCE DRAWINGS:-
1. PROCESS P&I DIAGRAM OF PROCESS WATER TANK : 9587-001-109-PVM-F-001
2. PLOT PLAN : 9587-001-301-POC-F-001

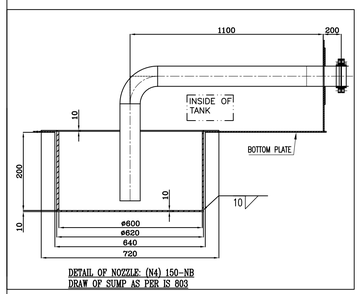

DETAIL OF NOZZLE: (N4) 150-NB
DRAW OF SUMP AS PER IS 803

ALL THE REQUIREMENTS SHOWN UNDER GA DRAWING ARE BARE MINIMUM, ANY OTHER ITEM FOUND APPLICABLE DURING DETAILED ENGINEERING AS PER TECHNICAL SPECIFICATION/DESIGN CALCULATION/ FUNCTIONAL REQUIREMENT SHALL BE SUPPLIEDBY BIDDER WITHOUT ANY COMMERCIAL IMPLICATION TO BHEL.

REV	DESCRIPTION	BY	DATE	APPROVED
0				

REVISIONS

NTPC DRG No.	9587-109-PVM-B-143
PS-PEM	OWNER: NTPC LIMITED LARA SUPER THERMAL POWER PROJECT STAGE-II (2x800MW)
DRAWN/DATE PK/09-09-2024	GENERAL ARRANGEMENT AND LOAD DATA OF PROCESS WATER TANK #A
CHECKED/DATE PK/09-09-2024	
APPROVED/DATE SR/09-09-2024	JOB NO. 508 / DWG NO. PE-DG-508-167-A107 / REV. 0
SCALE: N.T.S	SH. 1 OF 3

THE INFORMATION ON THIS DOCUMENT IS THE PROPERTY OF BHARAT HEAVY ELECTRICALS LIMITED. IT MUST NOT BE USED DIRECTLY OR INDIRECTLY IN ANY WAY DETRIMENTAL TO THE INTEREST OF THE COMPANY.

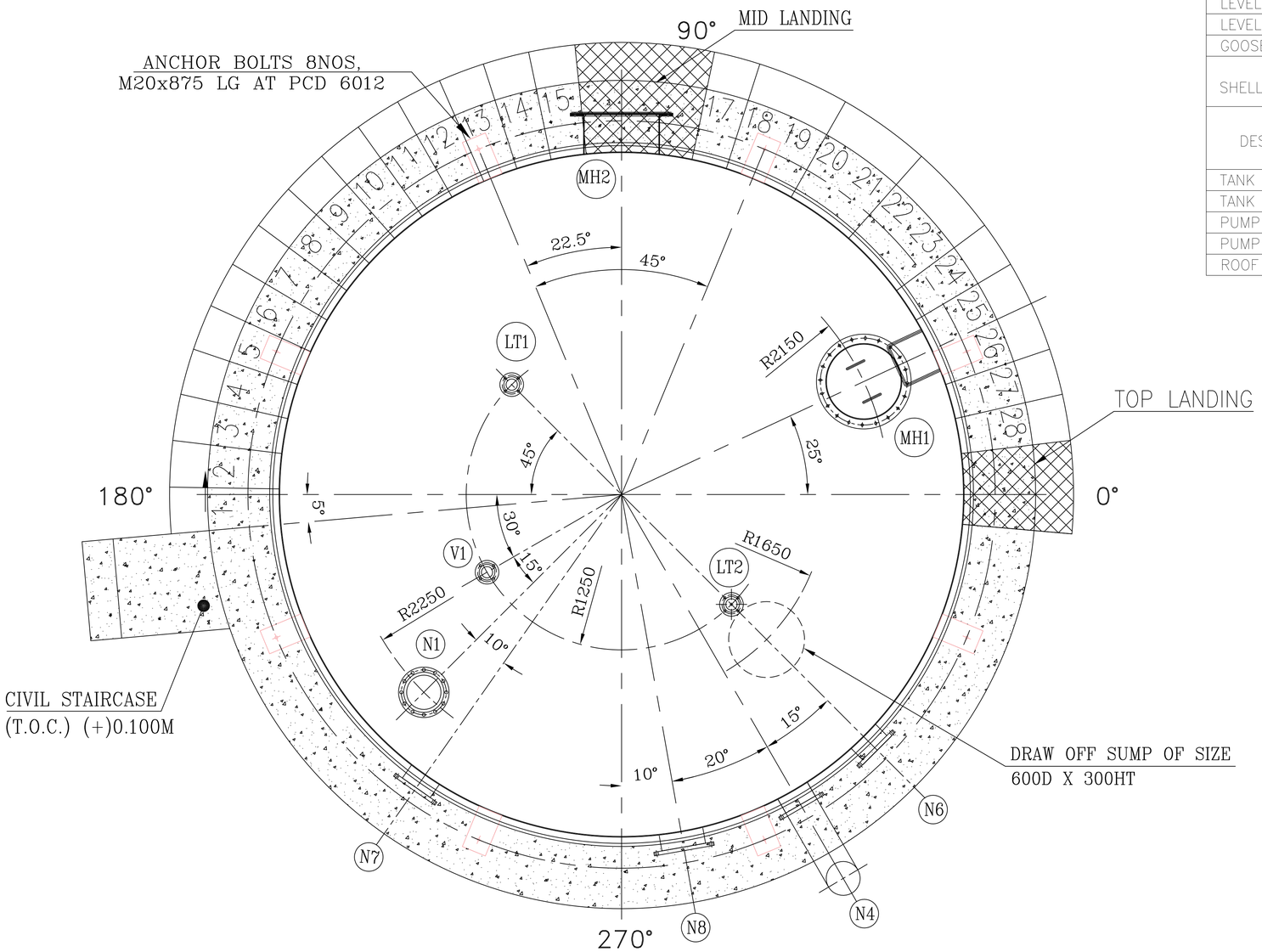

PLAN VIEW TANK–A

ROOF APPURTENANCE

DESCRIPTION	CUSTOM MARK	FLANGE TYPE, RATING	NOZZLE THICKNESS	SIZE	OUTSIDE PROJECTION	HORZ. RADIUS FROM CENTER OF TANK ROOF	ORIENTATION FROM TANK NORTH (0°)
ROOF MANWAY	MH–1	AS PER API 650	6.0	600NB	200	2150	25°
LIQUID INLET	N1	150# F.F. S.O.	6.35	300NB	200	2250	225°
LEVEL TRANSMITTER–1	LT–1	150# F.F. S.O.	4.8	80NB	200	1250	135
LEVEL TRANSMITTER–2	LT–2	150# F.F. S.O.	4.8	80NB	200	1250	315°
GOOSENECK ROOF VENT	V1	150# F.F. S.O.	5.4	100NB	200	1250	210°

SHELL APPURTENANCE

DESCRIPTION	CUSTOM MARK	FLANGE TYPE, RATING	NOZZLE THICKNESS	SIZE	OUTSIDE PROJECTION	ELEVATION FROM BOTTOM PLATE	ORIENTATION FROM TANK NORTH (0°)
TANK OVERFLOW	N4	150# F.F. S.O.	12.7	350NB	250	5400	300°
TANK DRAIN	N6	150# F.F. S.O.	9.52	125NB	200	200	315°
PUMP SUCTION OUTLET	N7	150# F.F. S.O.	12.7	300NB	225	500	235°
PUMP SUCTION OUTLET	N8	150# F.F. S.O.	12.7	300NB	225	500	280°
ROOF MANWAY	MH–2	AS PER API 650	8.0	600NB	300	760	90°

NOTES:

1.– ELEVATIONS SHOWN FROM TOP OF TANK BOTTOM AT THE LOCATION OF THE APPURTENANCE.

MATERIAL SPECIFICATION

S.NO	ITEM	MATERIAL
1	SHELL, BOTTOM AND ROOF,ANCHOR CHAIR AND BAFFLE PLATE	IS: 2062 GR.B
2	MANHOLE NECK	IS: 2062 GR.B
3	MANHOLE FLANGE & COVER	IS: 2062 GR.B
4	NOZZLE NECKS DN 65– DN 150 (SCH.HEAVY)	IS 1239 ERW BW
5	NOZZLE NECKS DN 200–DN 300(SCH.20)	IS 3589 Gr.410 ERW BE
6	NOZZLE NECKS DN350 – DN500 (SCH.10)	IS 3589 Gr.410 ERW BE
7	NOZZLE FLANGES (DN25 – DN600)	IS 2062 GR.B (PLATE),SOFF ASME–C207 CL.D
8	NOZZLE FLANGES (DN650 – DN1800)	IS 2062 GR.B (PLATE),SOFF AWWA–C207 CL.D
9	BOLTING (NUTS&BOLTS)/MAN HOLE	SA 193 GR B7 & SA 194 GR 2H
10	STRUCTURALS	IS: 2062 GR.E 250 A/B MS
11	FITTINGS DN25 – DN50 (SCH. SUIT TO PIPE)	SA 105 (SW)
12	FITTINGS DN65 – DN500 (SCH. SUIT TO PIPE)	SA 234 GR. WPB (BW)
13	STAIRWAY & PLATFORM	IS: 2062 GR. E250 A
14	HANDRAILS	IS 1239 (MEDIUM), GALVANIZED
15	NAME PLATE	SS 304

REV	DESCRIPTION	BY	DATE	APPROVED
0				

REVISIONS

NTPC DRG No. 9587–109–PVM–B–143

PS–PEM

OWNER: NTPC LIMITED
LARA SUPER THERMAL POWER PROJECT
STAGE–II (2x800MW)

GENERAL ARRANGEMENT AND LOAD DATA OF PROCESS WATER TANK #A

DRAWN/DATE PK/09–09–2024
CHECKED/DATE PK/09–09–2024
APPROVED/DATE SR/09–09–2024

JOB NO. 508
DWG NO. PE–DG–508–167–A107
REV. 0

SCALE: N.T.S

THE INFORMATION ON THIS DOCUMENT IS THE PROPERTY OF BHARAT HEAVY ELECTRICALS LIMITED. IT MUST NOT BE USED DIRECTLY OR INDIRECTLY IN ANY WAY DETRIMENTAL TO THE INTEREST OF THE COMPANY.

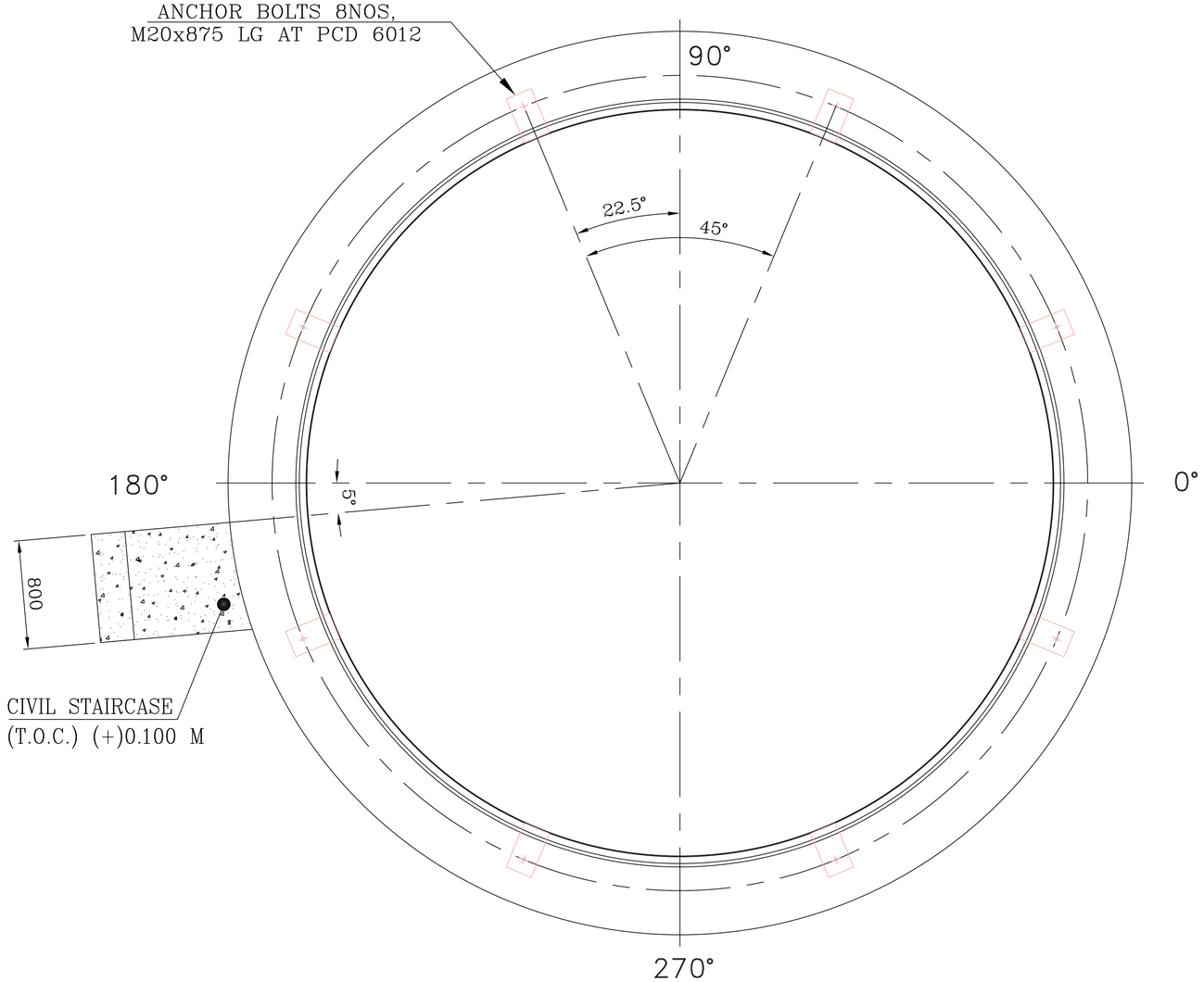

ORIENTATION TANK–A

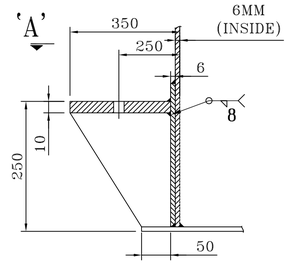

ANCHOR CHAIR

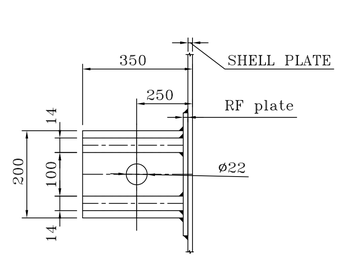

VIEW–'A–A'

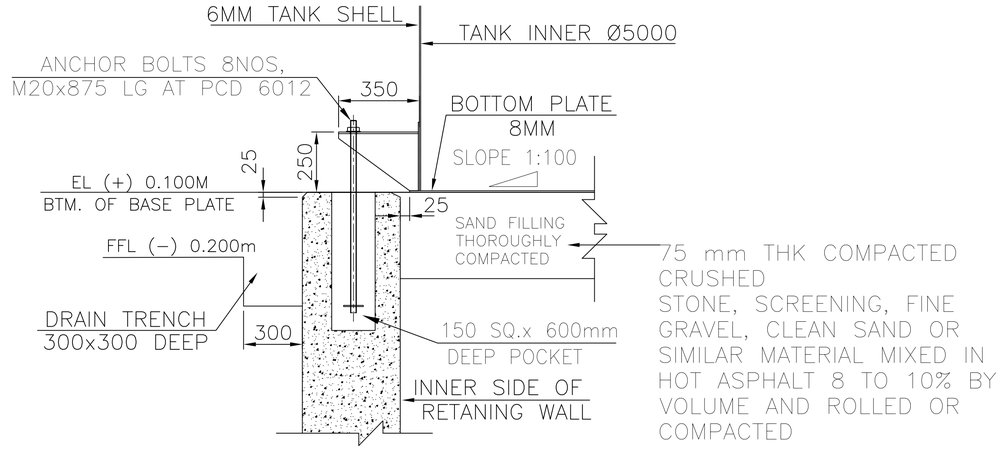

ANCHOR CHAIR DETAIL

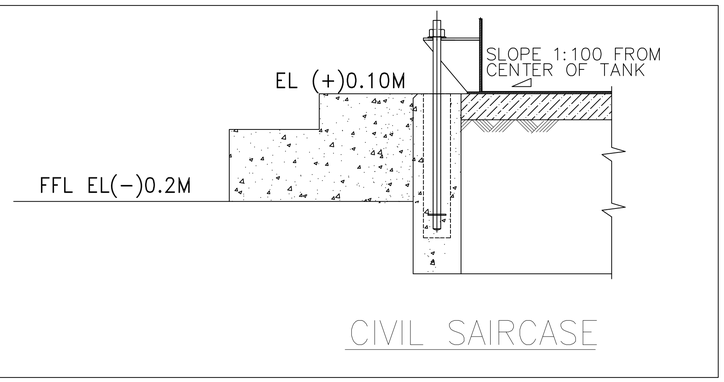

0				
REV	DESCRIPTION	BY	DATE	APPROVED

REVISIONS

NTPC DRG No.	9587–109–PVM–B–143		
PS–PEM	OWNER: NTPC LIMITED LARA SUPER THERMAL POWER PROJECT STAGE–II (2x800MW)		
DRAWN/DATE PK/09–09–2024	GENERAL ARRANGEMENT AND LOAD DATA OF PROCESS WATER TANK #A		
CHECKED/DATE PK/09–09–2024			
APPROVED/DATE SR/09–09–2024	JOB NO. 508	DWG NO. PE–DG–508–167–A107	REV. 0
SCALE: N.T.S	THE INFORMATION ON THIS DOCUMENT IS THE PROPERTY OF BHARAT HEAVY ELECTRICALS LIMITED. IT MUST NOT BE USED DIRECTLY OR INDIRECTLY IN ANY WAY DETRIMENTAL TO THE INTEREST OF THE COMPANY.	SH. 3 OF 3	

DESIGN PARAMETERS

GOVERNING STANDARD: API-650	DESIGN INTERNAL PRESSURE: 0.62 kPa	METAL TEMPERATURE: MIN. DESIGN TEMP.: 15 °C DESIGN TEMP.: 55 °C	C.A. SHELL: 1.5 mm	RADIOGRAPH: SPOT PER CODE	
EDITION: 13TH EDITION	DESIGN EXTERNAL PRESSURE: 0.25 kPa	JOINT EFFICIENCY: SHELL: 0.85 ROOF: 0.85 BOTTOM: 0.85	C.A. BOTTOM: 1.5 mm	ANCHORAGE: YES	
APPENDIX(ICS): A, E, F	SPECIFIC GRAVITY: 1.0	BOTTOM SEAMS: BW	C.A. ROOF: 1.5 mm	WINDGIRDER: NONE	
CAPACITY TO TOP OF SHELL: 135 m^3	WIND: E= C I= 1 V= 169.49 km/h	FIXED ROOF SEAMS: BW	C.A. STRUCTURE: 1.5 mm	WORKING CAPACITY: 123 m^3	
DESIGN LIQUID LEVEL: 5.2 m	SEISMIC: SUG= 2 SC= D Av= 0.2763 TL= 4 Sp= 0.16	FLOATING ROOF SEAMS: --	NET WORKING CAPACITY: 95 m^3	DESIGN BY: PK	DATE 30-Aug-2024
MAX OPERATING TEMPERATURE: 45 °C	ALLOWABLE STRESS: 145 MPa	SHELL SEAMS DBW		CHECK BY: SR	DATE 30-Aug-2024

TANK WEIGHTS:
WEIGHT OF TANK, EMPTY : 10000 KG
WEIGHT OF TANK WITH FULL OF PRODUCT (SG = 1.0) : 145000 KG
SEISMIC MOMENT (RING-WALL) : 452.62 KN-M
SEISMIC MOMENT (SLAB) : 592 KN-M
WIND MOMENT : 1156.15 KN-M
SEISMIC BASE SHEAR : 22.85 KN/M
WIND LOAD : 24.77 KN

All the requirement shown under GA drwg are bar minimum, any other item found applicable during detailed engineering as per Technical Specification / Design Calculation/ Functional Requirement , shall be supplied by bidder without any commercial implication to BHEL.

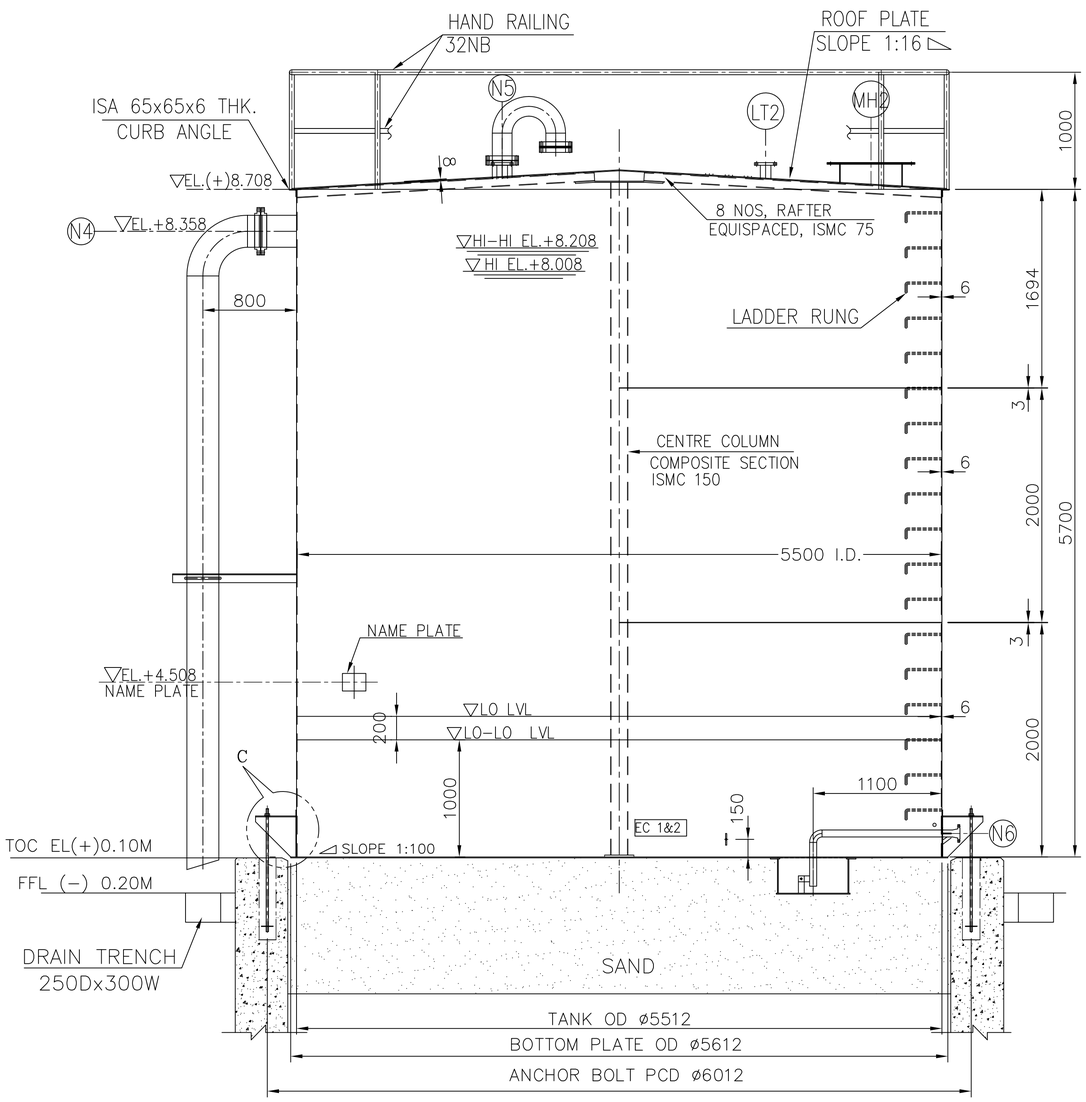

ELEVATION

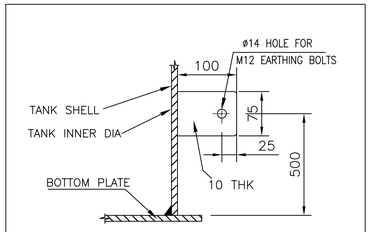

EARTHING LUG

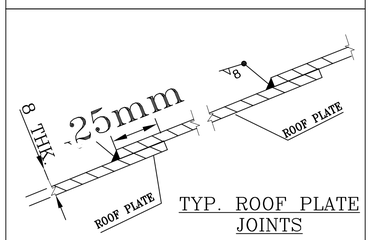

TYP. ROOF PLATE JOINTS

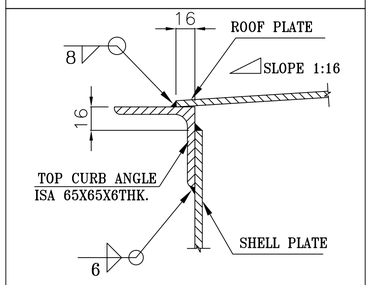

ROOF WELDING DETAIL

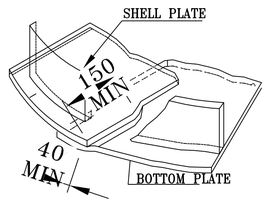

BOTTOM WELDING DETAIL

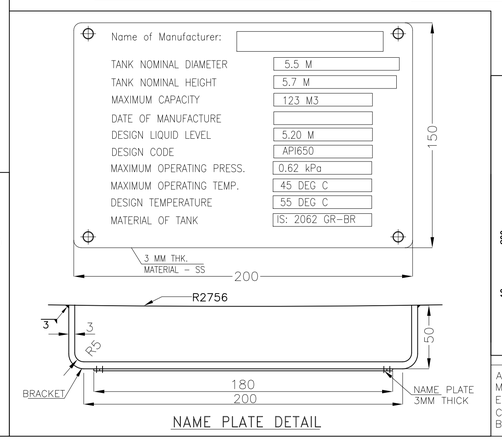

NAME PLATE DETAIL

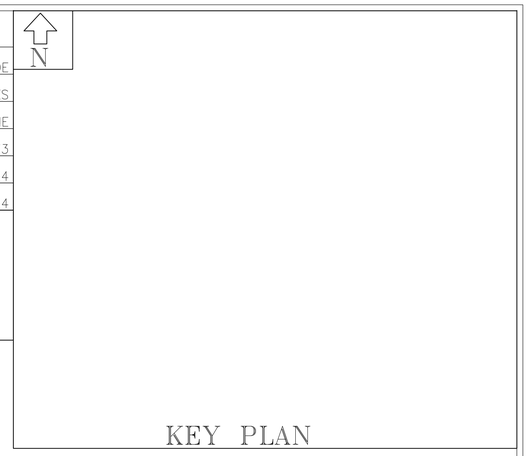

KEY PLAN

NOTES:
1. ALL DIMENSIONS ARE IN MM. ELEVATIONS ARE IN METER UNLESS OTHERWISE SPECIFIED.
2. ELEVATION 0.00 IS THE GROUND FLOOR LEVEL FOR POWER HOUSE BUILDING WHICH CORRESPONDS TO RL (+)209.50M.
4. NOZZLE PROJECTIONS ARE MEASURED FROM TANK SHELL INNER TO FLANGE FACE AS APPLICABLE.
5. ALL REINFORCEMENT PADS SHALL BE PROVIDED WITH 6MM TELLTALE HOLE.
6. ALL BOLT HOLES SHALL BE STRADDLE VERTICAL CENTERLINES ON SHELL AND RADIAL CENTERLINES ON ROOF.
7. ALL PROTRUSIONS, SHARP EDGES AND SPATTER ETC. SHALL BE REMOVED FROM THE SURFACE AND ALL WELDS GROUND SMOOTH WITHOUT ANY CAVITES AND IMPERFECTION BEFORE LINING.
9. ALL LONGITUDINAL WELDS SHALL BE STAGGERED.
10. BOTTOM PLATE SHALL UNIFORMLY REST ON FOUNDATION.
11. THE MINIMUM SIZE OF THE WELD SHALL BE EQUAL TO THE THICKNESS OF THINNER MEMBER JOINT UNLESS SPECIFIED OTHERWISE.
12. GROUNDING LUGS SHALL BE WELDED TO THE TANK BODY AT SITE TO SUIT SITE REQUIREMENT.
13. PAINTING SHALL BE AS PER APPROVED PAINTING SCHEDULE.
14. PAD PLATES SHALL BE PROVIDED ON THE TANK FOR SUPPORTING PIPES AND CABLE TRAYS.
17. ALL JOINTS OF SHELL PLATES ARE DOUBLE WELDED BUTT JOINTS.
18. THREE PLATES JOINT SHALL NOT BE CLOSER THAN 300MM FROM EACH OTHER.
19. ALL FILLET WELDS SHALL BE 6MM UNLESS OTHERWISE SPECIFIED.
20. ALL HANDRAILS, FLAT AND TOE PLATE OF THE STAIRCASE SHALL BE BEND TO SUIT OUTSIDE RADIUS OF TANK DIAMETER.
22. GRATING SHALL BE HOT DIP GALVANIZED IN ACCORDANCE WITH IS: 2629 AND TESTED AS PER IS: 2633 AND 6745. QUANTITY OF ZINC COATING SHALL BE MIM 900 GM/ M2 OF SURFACE AREA (0.12MM UNIFORM THK)
23. EVERY CROSS BAR AND MAIN MEMBER SHALL BE WELDED WITH END FLATS.

PAINTING SCHEDULE

	TANK INSIDE SURFACE	TANK OUTSIDE SURFACE	TANK UNDERNEATH	GRATING AND RAILINGS FOR STAIRS, STAIRCASE
SURFACE PREPARATION	SP3- POWER TOOL CLEANING / SP5 - SHOT BLASTING OR ABRASIVE BLASTING			
PRIMER	TWO COAT OF RED OXIDE ZINC PHOSPHATE IS: 12744 PRIMER COAT - 60µ EACH	ONE COAT OF TWO COMPONENT ZINC (ETHYL) SILICATE PRIMER COAT - 70µ	2 COATS OF HIGH BULD COAL TAR EPOXY SUITABILY PIGMENTED, DFT;80-100 MICRONS EACH COAT	HOT DIP GALVANIZED TO 610GMS/SQ-M (MINIMUM) AND TO A COATING THICKNESS OF 87µ (MINIMUM)
INTERMEDIATE COAT	-	ONE (1) COAT OF TWO COMPONENT POLYAMIDE CURED EPOXY WITH MIO CONTENT - 100µ/ COAT		**2 Coats of High Build Coal Tar Epoxy suitably Pigmented, DFT:80-100 microns each Coat.**
FINISH COAT	EPOXY LINING OF MINIMUM 150 MICRON THICKNESS (3 COATS OF 50 MICRON EACH).	TWO (2) COATS OF TWO PACK ACRYLIC POLYURETHANE PAINT TO IS:13213 - 35µ/ COAT SHADE - GREY WHITE, RAL 9002		
TOTAL DFT	270µ Min.	240µ Min.	160 - 200µ	87µ

REFERENCE DRAWINGS:-
1. PROCESS P&I DIAGRAM OF PROCESS WATER TANK : 9587-001-109-PVM-F-001
2. PLOT PLAN : 9587-001-301-POC-F-001

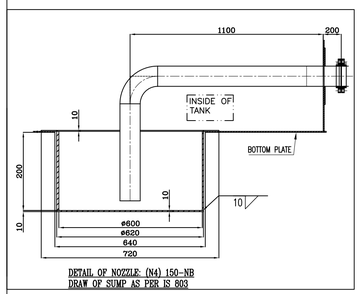

ALL THE REQUIREMENTS SHOWN UNDER GA DRAWING ARE BARE MINIMUM, ANY OTHER ITEM FOUND APPLICABLE DURING DETAILED ENGINEERING AS PER TECHNICAL SPECIFICATION/DESIGN CALCULATION/ FUNCTIONAL REQUIREMENT SHALL BE SUPPLIEDBY BIDDER WITHOUT ANY COMMERCIAL IMPLICATION TO BHEL.

REV	DESCRIPTION	BY	DATE	APPROVED
0				

REVISIONS

NTPC DRG No.	9587-109-PVM-B-143
PS-PEM	OWNER: NTPC LIMITED LARA SUPER THERMAL POWER PROJECT STAGE-II (2x800MW)
DRAWN/DATE PK/09-09-2024	GENERAL ARRANGEMENT AND LOAD DATA OF PROCESS WATER TANK #B
CHECKED/DATE PK/09-09-2024	
APPROVED/DATE SR/09-09-2024	JOB NO. 508 / DWG NO. PE-DG-508-167-A107 / REV. 0
SCALE: N.T.S	SH. 1 OF 3

THE INFORMATION ON THIS DOCUMENT IS THE PROPERTY OF BHARAT HEAVY ELECTRICALS LIMITED. IT MUST NOT BE USED DIRECTLY OR INDIRECTLY IN ANY WAY DETRIMENTAL TO THE INTEREST OF THE COMPANY.

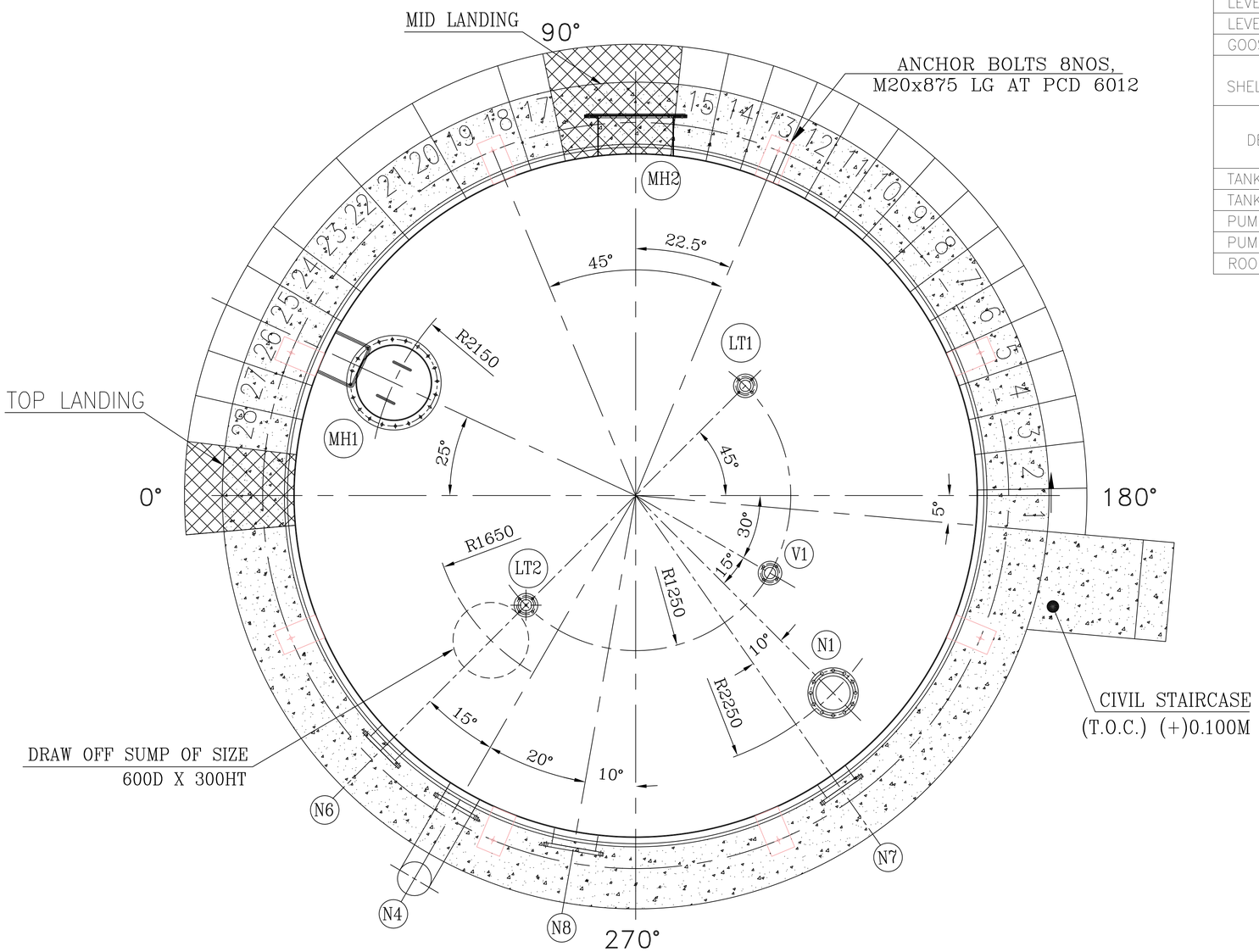

PLAN VIEW TANK-B

ROOF APPURTENANCE

DESCRIPTION	CUSTOM MARK	FLANGE TYPE, RATING	NOZZLE THICKNESS	SIZE	OUTSIDE PROJECTION	HORZ. RADIUS FROM CENTER OF TANK ROOF	ORIENTATION FROM TANK NORTH (0°)
ROOF MANWAY	MH-1	AS PER API 650	6.0	600NB	200	2150	25°
LIQUID INLET	N1	150# F.F. S.O.	6.35	300NB	200	2250	225°
LEVEL TRANSMITTER-1	LT-1	150# F.F. S.O.	4.8	80NB	200	1250	135
LEVEL TRANSMITTER-2	LT-2	150# F.F. S.O.	4.8	80NB	200	1250	315°
GOOSENECK ROOF VENT	V1	150# F.F. S.O.	5.4	100NB	200	1250	210°

SHELL APPURTENANCE

DESCRIPTION	CUSTOM MARK	FLANGE TYPE, RATING	NOZZLE THICKNESS	SIZE	OUTSIDE PROJECTION	ELEVATION FROM BOTTOM PLATE	ORIENTATION FROM TANK NORTH (0°)
TANK OVERFLOW	N4	150# F.F. S.O.	12.7	350NB	250	5400	300°
TANK DRAIN	N6	150# F.F. S.O.	9.52	125NB	200	200	315°
PUMP SUCTION OUTLET	N7	150# F.F. S.O.	12.7	300NB	225	500	235°
PUMP SUCTION OUTLET	N8	150# F.F. S.O.	12.7	300NB	225	500	280°
ROOF MANWAY	MH-2	AS PER API 650	8.0	600NB	300	760	90°

NOTES:

1.- ELEVATIONS SHOWN FROM TOP OF TANK BOTTOM AT THE LOCATION OF THE APPURTENANCE.

MATERIAL SPECIFICATION

S.NO	ITEM	MATERIAL
1	SHELL, BOTTOM AND ROOF,ANCHOR CHAIR AND BAFFLE PLATE	IS: 2062 GR.B
2	MANHOLE NECK	IS: 2062 GR.B
3	MANHOLE FLANGE & COVER	IS: 2062 GR.B
4	NOZZLE NECKS DN 65- DN 150 (SCH.HEAVY)	IS 1239 ERW BW
5	NOZZLE NECKS DN 200-DN 300(SCH.20)	IS 3589 Gr.410 ERW BE
6	NOZZLE NECKS DN350 - DN500 (SCH.10)	IS 3589 Gr.410 ERW BE
7	NOZZLE FLANGES (DN25 - DN600)	IS 2062 GR.B (PLATE),SOFF ASME-C207 CL.D
8	NOZZLE FLANGES (DN650 - DN1800)	IS 2062 GR.B (PLATE),SOFF AWWA-C207 CL.D
9	BOLTING (NUTS&BOLTS)/MAN HOLE	SA 193 GR B7 & SA 194 GR 2H
10	STRUCTURALS	IS: 2062 GR.E 250 A/B MS
11	FITTINGS DN25 - DN50 (SCH. SUIT TO PIPE)	SA 105 (SW)
12	FITTINGS DN65 - DN500 (SCH. SUIT TO PIPE)	SA 234 GR. WPB (BW)
13	STAIRWAY & PLATFORM	IS: 2062 GR. E250 A
14	HANDRAILS	IS 1239 (MEDIUM), GALVANIZED
15	NAME PLATE	SS 304

REV	DESCRIPTION	BY	DATE	APPROVED
0				

REVISIONS

NTPC DRG No. 9587-109-PVM-B-143

भेल BHEL

PS-PEM

OWNER: NTPC LIMITED
LARA SUPER THERMAL POWER PROJECT
STAGE-II (2x800MW)

GENERAL ARRANGEMENT AND LOAD DATA OF PROCESS WATER TANK #B

DRAWN/DATE PK/09-09-2024

CHECKED/DATE PK/09-09-2024

APPROVED/DATE SR/09-09-2024

JOB NO. 508

DWG NO. PE-DG-508-167-A107

REV. 0

SCALE: N.T.S

THE INFORMATION ON THIS DOCUMENT IS THE PROPERTY OF BHARAT HEAVY ELECTRICALS LIMITED. IT MUST NOT BE USED DIRECTLY OR INDIRECTLY IN ANY WAY DETRIMENTAL TO THE INTEREST OF THE COMPANY.

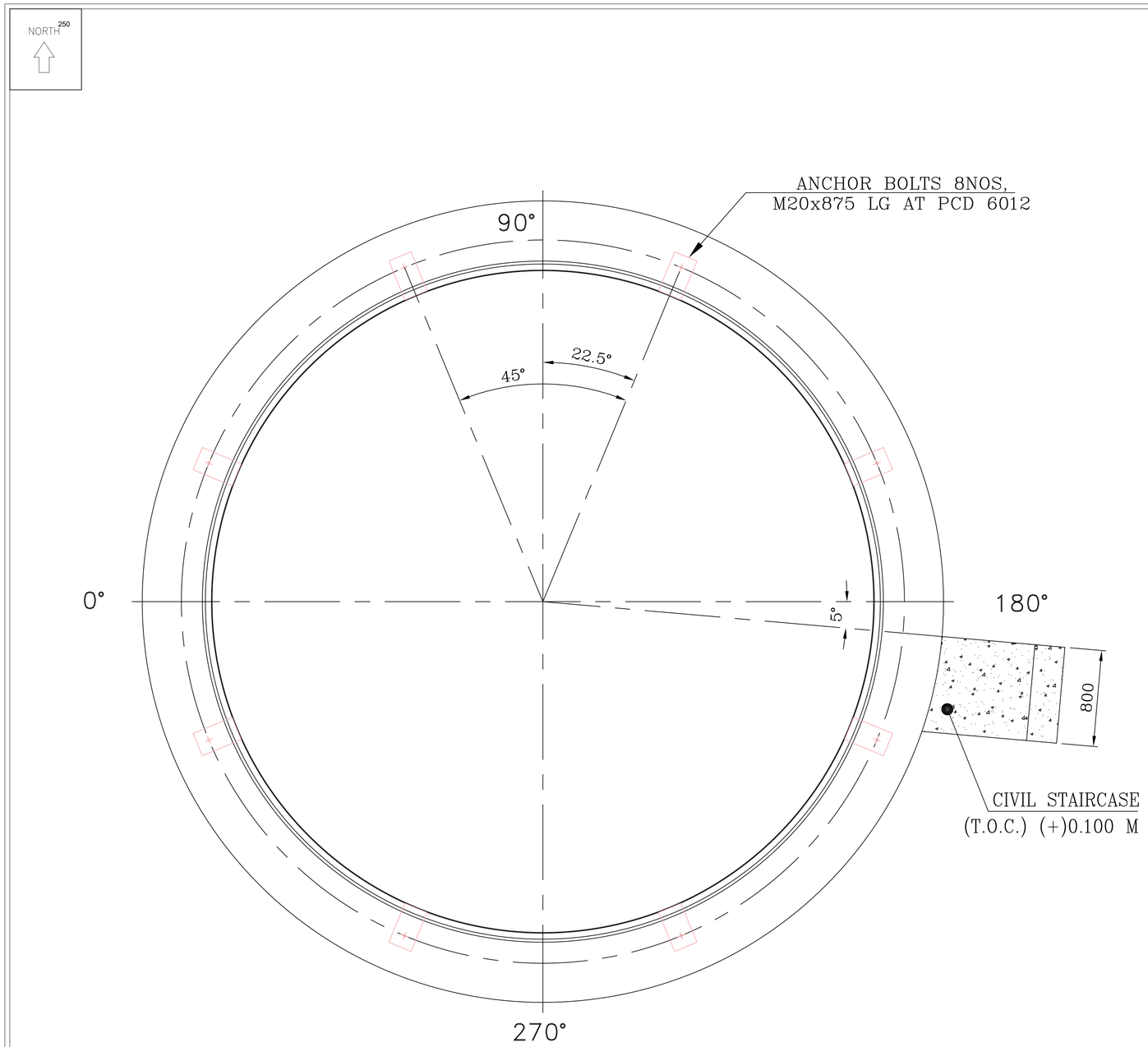

ORIENTATION TANK–B

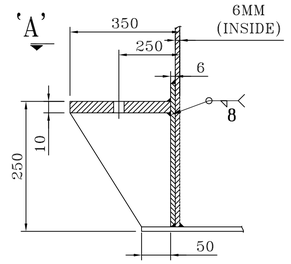

ANCHOR CHAIR

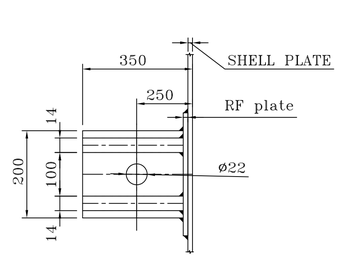

VIEW–'A–A'

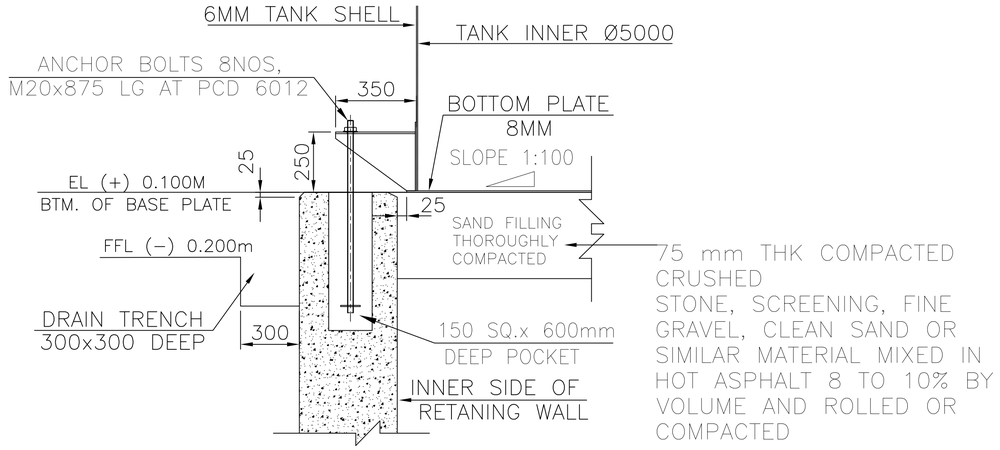

ANCHOR CHAIR DETAIL

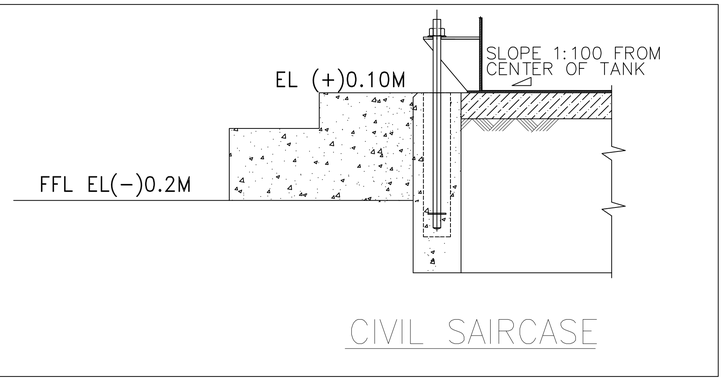

CIVIL SAIRCASE

0				
REV	DESCRIPTION	BY	DATE	APPROVED

REVISIONS

NTPC DRG No.	9587–109–PVM–B–143
PS–PEM	OWNER: NTPC LIMITED LARA SUPER THERMAL POWER PROJECT STAGE–II (2x800MW)
DRAWN/DATE PK/09–09–2024	GENERAL ARRANGEMENT AND LOAD DATA OF PROCESS WATER TANK #B
CHECKED/DATE PK/09–09–2024	
APPROVED/DATE SR/09–09–2024	JOB NO. 508 / DWG NO. PE–DG–508–167–A107 / REV. 0
SCALE: N.T.S	THE INFORMATION ON THIS DOCUMENT IS THE PROPERTY OF BHARAT HEAVY ELECTRICALS LIMITED. IT MUST NOT BE USED DIRECTLY OR INDIRECTLY IN ANY WAY DETRIMENTAL TO THE INTEREST OF THE COMPANY. / SH. 3 OF 3