2 X 660 MW KORBA WEST STPP

TECHNICAL SPECIFICATION
FOR
STATION LIGHTING SYSTEM

SPECIFICATION No. **PE-TS-530-558-E001**
ISSUE NO. 01
REV NO. 00

BHARAT HEAVY ELECTRICALS LIMITED
POWER SECTOR
PROJECT ENGINEERING MANAGEMENT
NOIDA, INDIA

INDEX

SL NO.	DESCRIPTION	SHEET NO.
1	Project Information	3
2	Scope	4
3	General Technical Requirement	5
4	Specific Technical Requirement	
a)	Technical Data - Part - A	19
b)	Technical Data - Part - B (Supplier Data to be submitted after of contract)	38
c)	Compliance Drawings	39
5	Performance Guarantees to be Demonstrated at Site	50
6	Technical Specification for Lighting System (Erection, Testing & Commissioning)	53
7	Quality Plan	71
8	Sub Vendor List	93
9	Painting Requirement	NA
10	Packing Requirement	refer Annexure-A to Quality Plan
11	Documentation Requirement	113
a)	Documents Required Along With Bid By Bidders	114
b)	Documents to be submitted by Successful Bidder after award of contract along with submission schedule	114
c)	Documents To Be Submitted As Final/As-Built	117
12	Compliance Certificate	118
13	Bill Of Quantity (BOQ)	
a)	Supply	120
b)	Erection & Commissioning (Installation)	124
14	Pre-Qualification Requirement (Technical)	128
15	PVC FORMULA & IEEMA Circulars	131

PROJECT INFORMATION

SL.NO	DESCRIPTION	DETAILS
1	**METEOROLOGICAL DATA**	
1.1	MAXIMUM TEMPERATURE (°C)	42.8
1.2	MINIMUM TEMPERATURE (°C)	4.8
1.3	MAXIMUM RELATIVE HUMIDITY (%)	88
1.4	MINIMUM RELATIVE HUMIDITY (%)	23
1.5	AVERAGE ANNUAL RAINFALL	11.2 mm to 411.2 mm
1.6	SEISMIC ZONE (AS PER IS 1893)	II to V
1.7	HEIGHT ABOVE MSL	316m
1.8	WIND SPEED DATA	As per IS-875 latest revision & amendments. (Wind speed : 44 meters/sec)
1.9	SOIL BEARING CAPACITY	7 T/m2
2	Category of terrain	Category 2
2	**ELECTRICAL DATA**	
2.1	AMBIENT TEMPERATURE FOR DESIGN OF ELECTRICAL EQUIPMENT	50 Degree Centigrade
2.2	RATED FREQUENCY	50 Hz
2.3	FREQUENCY VARIATION	+3% & -5%
2.4	AC VOLTAGE	11,6.6,0.415 kV
2.5	AC VOLTAGE VARIATION	±6% for 11 and 6.6 kV; ±10% for 0.415 kV
2.6	DC VOLTAGE	220V DC
2.7	DC VOLTAGE VARIATION	-15% to +10%
2.8	FAULT LEVEL (KA/SEC)	a) 6.6 KV systems - 40 kA rms for 3 second, b) 11 KV & 415V systems- 50 kA rms for 1 second

SCOPE

SCOPE OF THIS PACKAGE COVERS THE FOLLOWING:

SL.NO	PARAMETERS	REQUIREMENT
1	Supply Including Design, Engineering, Manufacturing of Lighting Fixtures, Lamps & Misc. items, LDB & LP, Lighting Poles etc.	YES
a)	Main Supply	YES
b)	Commissioning Spares	NO
2	Painting	YES
3	Inspection & Testing	YES
4	Packing	YES
5	Transportation & Delivery To Site	YES
6	Erection & Commissioning	YES
7	Supervision of Erection & Commissioning	NO
8	Mandatory Spares	YES
9	O & M Service	NO
10	O & M Spares	NO

	GENERAL TECHNICAL REQUIREMENT
1	Design, manufacture, assembly, inspection & testing at vendor's/ sub-vendor's works, proper packing and delivery to site of Lighting fixture complete with lamps & accessories, Lighting DB, Welding DB & Lighting Panels, Receptacles, Switchboxes, Ceiling Fans with Regulators, Lighting Poles, Earth Wires & Rods, Junction Boxes, maintenance Ladders shall be in scope of contract, complete with all accessories for efficient and trouble-free operation.
2	It is not the intent to specify herein all the details of design and manufacturing. Bidder shall ensure that the offered equipment confirms in all respects to high standards of design, engineering and workmanship.
3	Bidder shall also ensure that the offered equipment shall comply with all applicable statutory and regulatory requirements.
4	In the event of any conflict between the requirements of two clauses of this specification, documents or requirements of different codes and standards specified, the more stringent requirement as per the interpretation of the owner shall apply.
5	Drawing/document submission shall be through web based Document Management System(DMS) of BHEL. Bidder would be provided access to the DMS for drawing/document submission. Bidder to ensure internet connectivity of min speed of 2Mbps at their end.
6	Drawings/ documents submitted by vendor at any stage shall be complete in all respects. Any incomplete drawing submitted shall be treated as non- submission with delays attributable to vendor. For any clarification/ discussion required to complete the drawings, the bidder shall depute his personnel to BHEL / Customer's Office as per the requirement for across the table submission/ finalizations of drawings.
7	Latest codes and standards shall be complied with as on date of techno-commercial bid opening.
8	Bidder shall submit Quality Plan in the event of order based on the Quality Plan enclosed therein on compliance route. Inspection / testing shall be witnessed as per same apart from review of various test certificates/ Inspection records etc.
9	Equipment must be safe, reliable and easy to maintain at all operating conditions
10	The equipment shall comply with all applicable safety codes and statutory regulations of India as well as of the locality where the equipment is to be installed. Statutory and regulatory regulation shall be applicable as per Indian Electricity Rule, 2005 with latest amendment for illumination & low voltage power services
11	The illumination system shall be designed on the basis of best engineering practice and shall ensure uniform, reliable, aesthetically pleasing and glare free illumination. All fixtures shall be of proven design for applications in power plant environment. The lighting fixtures shall be designed for minimum glare. The design shall prevent glare/luminous patch seen on VDU/ Large video screens, when viewed from an angle. The finish of the fixtures shall be such that no bright spots are produced either by direct light source or by reflection. The diffusers/ louvers used in fixtures shall be made of impact resistant polystyrene sheet and shall have no yellowing property over a prolonged period.
12	Bidder shall confirm compliance with the Standard Quality Plan no. 0000-999-QOE-S-062, 0000-999-QOE-S-034, 0000-999-QOE-S-039 & CPG-QA-SQP-E-012 (enclosed with the specification) without any deviations. Please note that these Quality plans are to be followed in totality however bidder to prepare and submit project specific quality plans with project title block and document number. There can be Modifications in the Quality Plans as per purchaser's requirement during document approval stage. There shall be no commercial implication on account of these Modifications/additional test requirements in the Quality plan.
13	Luminaires suitable for surface mounting shall also be suitable for pendant mounting. Knockouts of 20mm ET conduit fixation shall be provided for this purpose.
14	Recessed type decorative luminaires shall be suitable for mounting with gypsum boards / luxalon / plaster of Paris/aluminium frame false ceiling of standard size.
15	Typical Mounting arrangement of Lighitng fixtures is shown under compliance drawings, all indicated accessories required for mounting of fixtures shall be supplied along with the respective lighting fixture.
16.1	The illumination for Service building shall be designed keeping in mind the Green building features, such as daylighting etc., to ensure that building is climatically responsive and consumes less energy.
16.2	Control system for service building lighting shall include all items required for control of lighting in service building to achieve green building features as per technical specification.
16.3	Any distributed sensors required in illumination of service building to achieve green building features shall be supplied and installed by the bidder and cost of same shall be covered in BOQ line item " Lighting sensor system (Service Building)" (supply and E & C)
16.4	Above points mentioned at sl. No. 16.1, 16.2,16.3 are applicable if illumination in service building is designed keeping in mind green building features. In case illumination in service building is conventional LED Illumination then above points shall not be applicable. Details & type of service building illumination shall be decided during detailed engineering.
17	Vendor shall prepare and submit Lighting layout and Conduit layout drawings considering the following requirements for purchaser's approval :

17.1	Lighting calculations for indoor areas covering details such as room dimensions (length, width, height), illumination level, maintenance factor (Dust prone indoor/outdoor areas, boiler area: 0.6, Control room and air conditioned areas : 0.8, Indoor areas (non-ac): 0.7), reflection factor (ceiling : 0.8 , wall :0.5 , floor : 0.2) , type of luminaire, mounting height of luminaire, room index, coefficient of utilisation, no. of luminaires (AC Normal & AC Emergency), lumen output of each luminaire, reference drawings and remarks. Working height from floor level should be considered as 0.85 m. Lighting design for indoor areas will be done by LUMEN method only. For a given indoor area, number of luminaires is calculated as follows: Number of luminaires = L x W x LUX LEVEL (Average)/ LUMEN x COU x MF Where, L= Length of room (Restricted to Max. 5 times of width) W= Width of room LUMEN= Lumen output of each lamp COU= Coefficient of Utilisation MF= Maintenance Factor Coefficient of Utilisation (COU) is determined from the COU chart for a particular luminaire of the manufacturer, corresponding to selected reflection factors and calculated Room Index. Room index should be calculated using the following formula : (Lx W) / (L+W) x MH where MH : Mounting height of luminaire . L&W : Length and width of the room
17.2	Apart from maintenance factors given above, temperature correction factor shall be considered in the lighting design for fixtures located in non air conditioned areas.
17.3	Lighting calculations for outdoor areas covering average illumination level, type of luminaire, chart for illumination level at various points in the area; location (coordinates), number and height of poles; type, number (normal + emergency) and orientation of luminaires etc. Lighting design for outdoor area, open area shall be done by computer programme as per standard norms for lighting design to meet the specified lux level. Average maintenance factor for outdoor and road lighting: 0.6.
17.4	Single line diagrams of power distribution upto Lighting Panels. Separate drawing for complete lighting distribution shall also be prepared by vendor.
17.5	Loads on each phase of LP and LDB with consideration of diversity factor(50%) for sockets.
17.6	Layout drawings for each indoor area indicating location of luminaires, type of mounting arrangement, sockets, fan points, exhaust fans, LDBs and LPs. Details of type of luminaires, source of power supply (AC Normal, AC Emergency, DC Normal and DC Emergency). Bill of Material shall also be covered which shall include unit wise requirements of luminaires and other items.
17.7	Layout drawings for each outdoor area indicating location of poles / towers, orientation of luminaires, type of mounting arrangement, sockets and LPs. Details of pole height / mounting height, type of luminaires, source of power supply (AC Normal, AC Emergency, DC Emergency). Bill of Material shall also be covered for various types of luminaires.
17.8	Conduit layout drawings with wiring and load distribution details as superimposed on the area layout drawings indicated above. Drawings shall include Bill of Material for conduits, wires, cables, structural steel of mounting arrangement etc.
17.9	Wires shall be laid in GI conduits of 20mm dia size (minimum). Filling area of wires in conduit shall not exceed 40% of conduit area. Wiring of AC Normal, AC Emergency and DC services will run in separate conduits. Lighting and receptacles will be fed from separate circuits. No two different phase circuits will be run in same conduit. However, different circuit of same phase may be laid in the same conduit. At least two sub circuits shall be used for illumination of a particular area. Sub circuit loading of each lighting panel shall be restricted to 2000 Watts.
17.10	Cables shall run in cable trays. Conduit is not applicable for the portion where cables are used.
17.11	Master Bill of Material (to be submitted at regular intervals of engineering progress) including all items required for the complete lighting system viz. lighting fixtures, lamps, Lighting DBs, Welding DBs, lighting panels, conduits, PVC wires, cables, Structural Steel etc.

18	Wiring/Conduits :
18.1	Wiring of lighting system will be done as follows: (i) Wiring installation will be done by multi-stranded, PVC insulated, unsheathed, copper, colour coded wires laid in GI conduits of 20 mm dia size (minimum) conforming to IS-9537. The thickness of conduits up to & including 25 mm dia will be 1.6 mm and conduits above 25 mm will be 2.0 mm. Colour of the PVC insulation of wires shall be Red, Yellow, Blue, black for R, Y, and B phases & neutral respectively and white & grey for DC positive & DC negative circuits respectively. (ii) Conduits will be heavy-duty type hot dip galvanised steel conforming to IS-9537. Conduit accessories will be hot dip galvanised. In corrosive area, conduits will have suitable epoxy coating additionally. (iii) Flexible conduit shall be water proof, rust proof, made of heat resistant steel with temperature rating of 150 deg C. (iv) Concealed conduits shall be GI conduits. Conduits in office rooms, control room, service building, laboratory building and other air-conditioned areas will be surface mounted on the roof above false ceiling. However vertical drops of conduits will be concealed along walls and finally plastered for better aesthetics. Vertical drops along RCC column shall be exposed. For other areas, conduits shall be surface mounted and shall be hot dip galvanised. Conduits shall be threaded on both sides and thread length shall be protected by zinc rich paint. Pull out boxes shall be provided at suitable interval in a conduit run. Boxes shall be suitable for mounting on Walls, columns, structures etc. Pull-out boxes shall have cover with screws and shall be provided with good quality gasket lining. Pull-out boxes used outdoors shall be weather proof type suitable for IP-55 degree of protection and those used indoor shall be suitable for IP-52 degree of protection. Pull-out boxes and its cover shall be hot dip galvanised. (v) Filling area of wires in conduit shall not exceed 40% of the conduit area. (vi) Wiring for AC Normal, AC Emergency, and DC services will run in separate conduits (vii) Lighting and receptacles will be fed from separate circuits. No two different phase circuits will be run in the same conduit. However, different circuits of same phase may be laid in the same conduit.
18.2	Following sizes of 1100 V grade, PVC insulated, single core, stranded copper conductor wires will be used: Lighting Panel to Fixtures: 1.5 sq. mm (Cu) wire or cable Lighting Panel to JBs / Switches: 1.5 sq. mm (Cu) wire or cable JBs / Switches to Fixtures: 1.5 sq. mm (Cu) wire or cable Panel to First receptacles: 4 sq. mm (Cu) wire First receptacles to looping other receptacles (240V,1 phase receptacles): 4 sq. mm (Cu) wire In case of only one receptacles in ckt., Panel to receptacles (240V,1 phase receptacles): 4 sq. mm (Cu) wire Panel/ JBs to flood light fixtures: 1.5 sq. mm (Cu) wire or cable Note: Rigid Steel Conduit, Wires & Cables are not in vendor's scope of supply, however vendor to show size & quantity in CLO drawings.
19	Earthing:
19.1	Earthing of lighting system will be done by using of following sizes of wire / flat: Lighting Distribution Board: GS Flat 50x6 mm Lighting Panels: GS Flat 25x3 mm Lighting fixtures, receptacles, conduits, junction boxes & switch boxes: 14 SWG GI wire Welding receptacles: GS Flat 50x6 mm Street light pole / flood light pole / high mast: GS Flat 25x3 mm Electrode for Pole / High mast earthing: 1 nos, 40 mm dia MS rod, 3 mtr long All the earthing to various equipment like receptacles, junction boxes etc shall be provide at two point. Note : Bidder shall make suitable provision for earthing for the equipment which are in their scope of supply . Earthing flats, Earthing rod, 14 SWG earthing wires will be supplied by purchaser as free issue item to bidder, Laying & termination of these items are to be done by the bidder.
20	Lighting panels shall have 20% spare outgoing feeders. AC NLP (with timer for outdoor LP) shall have 6/12/18 outgoing feeders as per the loading requirement of the area where LP is installed. Streel LP shall have 6 outgoing feeders. All outdoor lighting system shall be automatically controlled by synchronous timer. Provisions to bypass the timer shall be provided in the panel. Programmable Digital Timer shall be Electronic Astronomical Almanac Time switch with battery backup of min. TEN years, 4 Digit LED display, 24 hours range, manual override facility, 10 Amp 3 relay output, with NO/NC Contacts suitable for operation on 240V single phase AC supply.

21	The vendor shall guarantee satisfactory performance of the equipment supplied under all conditions and requirement as laid down by this specification.
22	LED modules and drivers shall be compatible to each other. The LED module driver's ratings and makes shall be as recommended by corresponding LED chip manufacturer. LED Drivers shall have following control & protections:Open Circuit Protection, Suitable precision current control of LED, Short Circuit Protection, Over Temperature Protection, Overload Protection and Surge Protection.
23	The individual lamp wattage for LED shall be upto 3 watt. Fractional wattage LEDs are also acceptable. The LED chip efficacy shall be min 120 Lm/W. The luminaire efficacy shall be not less than 100 Lm/W. Suitable heat sink shall be designed & provided in the luminaire. The LED used in the luminaires shall have colour rendering index (CRI) of Min 80. Colour designation of LED shall be "cool day light" (min 5700K) type for indoor areas. However for outdoor areas, the colour temperature of LED shall be min. 4000K, including rough & dust prone areas. LED shall conform to the LM 80 requirements. The max. junction temperature of LED shall be 85 deg C. Further the lumen maintenance at this temperature shall be min 90%. The THD of LED Luminaires shall be less than 10%. Further the EMC shall be as per IS 14700. The power factor of the luminaire shall not be less than 0.9. The marking on luminaire & safety requirements of luminaire shall be as per IS standards. Suitable heat sink with proper thermal management shall be designed & provided in the luminaire. LED luminaries shall have a minimum life of 25000 burning hours with 80% of lumen maintenance at the end of the life. The connecting wires used inside the system, shall be low smoke halogen free, fire retardant type and fuse protection shall be provided in input side specifically for LED luminaire. Care shall be taken in the design that there is no water stagnation anywhere in the housing of the luminaire. The entire housing shall be dust and water proof protection as per IS 12063.
24	The lighting fixtures in the plant area shall be group controlled from lighting panel. The lighting fixtures in office areas, control rooms etc. shall be controlled by switches. Each switch shall control a maximum of three LED batten/decorative fixtures.
25	LED Luminaires shall be used for the lighting of all the indoor & outdoor areas. In the hazardous areas like fuel oil handling area or any other gas/ liquid fuel storage/ handling areas in bidder's scope, lighting shall be flameproof. In false ceiling area LED luminaires shall be recessed mounting type & in non-false ceiling area the LED luminaires shall be surface mounting type. For CCR room, dimmable and tuneable down lighter fittings shall be provided. LED fixtures shall be used for DC lighting. Lighting Dimmer System shall be complete in all respects for control of the dimmable fixtures in CCR room. Any special cable required for the same shall be in the supplier scope and shall be part of the system and cost of such special cables shall be deemed to be included in the price of dimmer system.
26	Occupancy based passive infra-red sensors: Occupancy based Passive Infra-red sensor shall be provided in air-conditioned office rooms suitable to cater the controlled lighting systems. The detection area shall be minimum 5 metres for standard room height of 3mt. All the calibrated settings shall be stored in non-volatile memory of PIR sensor which shall be unaffected by power supply fluctuations. If necessary, contactor shall be supplied along with each sensor & shall be located inside the switch box/Panel. The contactor (if supplied) shall be considered as part of the occupancy sensor.
27	Lighting system will be provided with AC normal, AC emergency and DC as listed against various areas. The sources of power lighting are as below: (i) 415V AC Normal (ACN) Supply from lighting distribution boards / switchboard MCCs (ii) 415V AC Emergency (ACE) Supply from Emergency Board (iii) 220V DC Supply from DC Distribution Board in main plant (iv) 24V AC supply for maintenance (v) DC lighting is to be provided, through self-contained DC fixtures with four hours back-up duration, at strategic locations, in auxiliary/offsite buildings wherever DC lighting is not available. The fixtures shall be switched 'ON' automatically in case of failure of AC supply. For main plant area normally all AC luminaries will be in service on normal AC supply. Approximately distribution of AC Luminaries on AC normal and AC emergency shall be as below: AC Normal (ACN) supply: 80% AC Emergency (ACE) supply: 20% For Average lux level and type of fixtures please refer to Compliance drawings. For lighting and LV service to be provided in different areas please refer to performance guarantees.

28	Receptacles boxes shall be fabricated as specified in technical data part-A. The boxes shall be provided with two nos. earthing terminals, gasket to achieve IP55 degree of protection, terminal blocks for loop-in loop-out for cable of specified sizes, mounting brackets suitable for surface mounting on wall/column/structure, gland plate etc. The ON-OFF switch shall be rotary type heavy duty, double break,AC23 category, suitable for AC supply. Plug and Socket shall be shrouded Die-cast aluminium. Socket shall be provided with lid safety cover. Robust mechanical interlock shall be provided such that the switch can be put ON only when the plug is fully engaged and plug can be withdrawn only when the switch is in OFF position. Also cover can be opened only when the switch is in OFF position. Wiring shall be carried out with 1100 V grade PVC insulated stranded aluminium/copper wire of adequate size. The Terminal blocks shall be of 1100 V grade. The Terminal blocks shall be of 1100 V grade made up of unbreakable polymide 6.6 grade with adequate current rating and size. The welding receptacles shall be provided with RCCB/RCD of 30mA sensitivity having facility for manual testing/checking of operation of RCCB/RCD.
29	Receptacle:
	(i) Decorative receptacle (RB) : At least 01 number 6/16A, 6-Pin, 240V AC decorative socket with switch will be provided in control room, office area, store room, cabin etc. In office area, suitable number of decorative socket with switch to be provided for IT requirements. (ii) Industrial receptacle (RA) : At least 01 number 20A, 3-Pin, 240V AC industrial type receptacles with switch will be provided at suitable location in industrial area. The receptacles shall be provided at interval of 50m or part thereof. All receptacles will be controlled with a switch. One number 20A, 3-Pin, 240V AC industrial type receptacles with switch will be provided at suitable location in Switchgear rooms and pump houses only. Maximum 4 nos will be loop in & loop out in a circuit wherever 20A receptacle is provided. (iii) Welding receptacle (RC) :63A, 3-phase, 415V AC welding receptacles with isolating switch will be provided at specific points near all major equipment and at an average distance of 50m (location will be decided during detailed engineering). Maximum 04 nos. receptacles will be fed through one feeder. The welding receptacles shall be provided with RCCB/RCD of 30mA sensitivity having facility for manual testing/ checking of operation of RCCB/RCD.
30	For items other than fixtures, bidder to furnish test certificates/conformance certificate during detailed engineering.
31	For outdoor lighting and road lighting ratio of minimum to average illumination will not be less than 0.3 and for minimum to maximum will not be less than 0.2.
32	Outdoor areas shall have flood light fixtures mounted on flood light poles.
33	All outdoor fixtures shall be weather proof and of min. IP65 degree of protection. For Indoor type of fixtures:- (a) Surface/Pendent mounting: - IP 54 class of protection. (b) Recess Mounting (False ceiling):- IP 20 class of protection
34	Junction box for indoor lighting shall be made of fire retardant material. Material of JB shall be thermoplastic or thermosetting or FRP type. Junction boxes for street lighting poles shall be deep drawn or fabricated type made of min 1.6mm thick CRCA sheet, hot dip galvanized min 50micron thick. The degree of protection shall be IP 55. For octagonal type poles, junction boxes are integral to the poles and separate junction boxes will not be required.
35	Street lights / outdoor lighting will be fed from separate panel located at suitable places. Automatic switching ON/OFF of these circuits shall be done from street light panel. For street lighting, street light pole will be used. For outdoor area lighting if required flood light pole will be used. Pole type shall be as below: Pole height: 9/11 meters. Pole construction type: Octagonal poles Pole type: Hot dip galvanized. Coating thickness of galvanizing shall be min 70 micron. The pole shall be mounted above ground using base plate.
36	Glands & lugs for JBs for cables shall be in bidder scope.
37	Rubber components used in the gland shall be of neoprene. Name / trade name of manufacturer, type no. and applicable range of outer diameter of cable shall be engraved / indelibly printed on the cable gland
38	All equipment shall be supplied with the power and control cable lugs of suitable size, whether specifically mentioned or not. Name / trade name and size of lug shall be engraved/ indelibly printed on each cable lug.

39	Containers adequate for storing 100% of P.O. quantity material at site are to supplied. Vendor shall furnish suitable justification to purchaser during detailed engineering for the number and size of containers being supplied. Materials like Concrete Blocks of Paved surface required for installation and placing of container shall be made available by BHEL. Other supporting material like Rails etc. shall be part of Container only.
40	Packing slip & holder: Packing slip kept in polyethylene bag shall be placed inside the container at appropriate place. One copy of packing slip wrapped in polyethylene bag covered in galvanized iron tin sheet/ aluminium packing slip holder shall be fixed on the external surface the container.
41.0	LDBs / WDBs / LPs :
41.1	a) LDB/WDB shall be totally enclosed, modular in construction, indoor type and suitable for electrical system data as specified in Data Sheet-A. The LDB/ WDB shall be free standing type suitable for installation on cable trenches / floor.
	b) LDB/ WDB shall consist of dust and vermin proof cubicles without the use of louvers (except the transformer compartment, where applicable).
	c) Good quality synthetic rubber / neoprene gaskets shall be put around the door, cover edges and cut-out edges for push button, lamps etc. for protection against dust. The door when closed, shall compress the gasket uniformly.
	d) Cut-out edges for instruments, relays etc. shall have sufficient overlap surface to minimize the dust entry. The arrangement for the front mounting of switch handles shall render the LDB/ WDB reasonably dust free such that the normal operations are not affected.
	e) The LDB/ WDB shall be designed to prevent contact with live parts both within the modules and in the cable alley.
	f) All equipment shall be constructed of non-hygroscopic and non-inflammable materials.
	g) All components mounted in the LDB/ WDB shall be accessible and shall not impede access to wiring or terminals. All faults except busbar fault which may occur within any individual unit shall be confined within that unit only and shall not cause shutdown of any section of the board other than the affected unit itself. Maintenance and inspection shall be possible in any individual unit without affecting other units.
	h) Incoming unit shall comprise of MCCB as per Data Sheet A. Outgoing units shall be MCCB as per data Sheet A.
	i) Interlock between compartment door and modules shall be provided such that the door cannot be opened without switching off the power supply to the module.
	j) Defeat interlock shall be provided for the units comprising of switch or moulded case circuit breaker as a means of isolation device, such that it is possible to open the door with device ON. It shall not be possible to close the door till the interlock has been reinstated.
	k) Each LDB/ WDB shall be fitted with base frame made of angle or channel.
	l) All fixing nuts and bolts together with grounding bolts shall be provided.
	m) Lifting lugs shall be provided for each shipping section of LDB/ WDB. Removal of such lugs or hooks shall leave no opening in the LDB/ WDB.
	n) Lighting panel (LP) for controlling lights with additional provision for manual/bypass control shall be provided: Indoor lighting panel: Refer data sheet Outdoor lighting panel: With Timer
	o) The LDBs shall be made of sheet steel (CRCA) of 2 mm thickness for load bearing members and 1.6 mm for other members and shall be provided with voltmeter and ammeter along with selector switch, supply ON indicating lamps etc. All indicating lamps will be cluster LED type. The DOP for LDB will be IP-54 for indoor and for transformer cubicle IP-42. DOP for LP shall be IP-55. Lighting distribution boards & panels shall be powder coated with colour shade RAL9002
41.2	LDB/ WDB with transformers (Additional Features)
	a) The LDB/ WDB shall be arranged in two adjacent but separate compartments, one compartment for the lighting transformer and the other for the incoming & outgoing feeders etc.
	b) The transformer shall be mounted on the base channel and it shall be possible to easily remove the transformer from the cubicle after opening the door. Necessary portable ramp made of mild steel shall be supplied along with each LDB/ WDB.
	c) Independent gasket hinged door with operating handle shall be provided for access to transformer & its taps. Operating handle shall have built-in key locking arrangement.
	d) Suitable ventilation arrangement for the transformer compartment to dissipate the heat of the transformer shall be provided. The arrangement shall be in the form of louvers and the same shall be provided with galvanised wire mesh with dust catchers on the inside.
	e) Connections between transformer secondary terminals and the busbars shall be made by using PVC insulated flexible copper cables or busbars.
	f) Warning plate shall be provided on transformer enclosure. The inscription of warning plate shall be as given below:
	- DO NOT OPEN DOORS WHEN ENERGISED
	- KEEP TAPS AT SAME POSITION FOR ALL PHASES
	g) Transformer enclosure shall be provided with a danger plate.

41.3	Lighting Transformer/ Welding Transformer
	a) Transformer, where specified, shall form an integral part of LDB/ WDB.
	b) Lighting transformer shall be dry type, natural air cooled and suitable for mounting inside the lighting distribution board. Transformer particulars shall be as specified in Data Sheet A.
	c) Rating of transformer shall be as per BOQ.
	d) Transformer shall be suitable for cable connections on the primary side and flexible cable or busbar connection on the secondary side.
	e) The secondary neutral of the transformer shall be brought out for getting a grounded 4 wire supply system.
	f) The transformer neutral shall be brought outside the LDB/ WDB for earthing. The neutral bus bar shall be insulated from the LDB/ WDB enclosure.
	g) Transformers shall be provided with the rollers, pulling holes, lifting lugs, jacking positions etc.
41.4	Busbars, Connections and Joints
	a) Busbars shall be supported on non-hygroscopic and non-inflammable insulators of material such as glass reinforced moulded plastic material, epoxy cast resin etc. Separate supports shall be provided for each phase of the busbars.Busbar shall be PVC Sleeve insulated(UL224) CE/UL certified. Insulation level of neutral busbar shall be same as that of phase busbars.
	b) Busbars shall be contained in a separate vermin-proof compartment within the LDB/ WDB and shall have bolted sheet steel covers for providing suitable access.
	c) Busbar clearances in the air shall be as per applicable standard for 415V, 3 phase system.
	d) Temperature for busbars, droppers and connections shall not exceed 90 deg.C for an ambient of 50 deg.C while carrying maximum continuous current.
	e) The busbar, busbar connections and supports shall have sufficient strength to withstand thermal and electromechanical stresses produced by the specified short circuit level of the system.
	f) Busbars (including neutral busbar) shall be capable of carrying the short-time current specified in Data Sheet A. The duration of short-time current shall be 1 sec unless mentioned otherwise in Data Sheet A. For the specified current and duration, there shall be no damage to the equipment.
	g) The neutral bus shall be rated same as phase bus.
	h) Main busbars and connections shall be prominently marked and displaced for standard sequence counting from rear to front, top to bottom, or left to right as viewed from the switching device operating mechanism side.
	i) Busbars and connections shall be provided with colour coded PVC sleeves. All live parts shall be properly shrouded with insulating material.
	j) Earth busbar shall be provided separately.
	k) Busbar Joints
	- Busbar and tap off joints shall be bolted type.
	- Busbars shall be thoroughly cleaned before jointing. Suitable contact grease shall be applied to remove oxide film just before jointing.
	- For copper busbars, the connecting portion shall be tinned or silver plated.
41.5	Wiring and Terminals
	a) All internal wiring for connections to remote equipment shall be brought to terminal boards. Spare contacts of devices shall also be wired upto terminal board as per schemes. Wires shall not be jointed or teed-off except at terminal points.
	b) Wiring shall be made by 1100 volt grade three / seven strand PVC insulated copper wire having a cross-sectional area of not less than 1.5 sq.mm. All connections from CT leads upto instruments, terminals shall be made by copper wires of minimum 2.5 sq.mm size.
	c) All wiring shall be made with the Colour Codes specified below :
	i) 3 phase AC Connections Phase 1 (R) Red Phase 2 (Y) Yellow Phase 3 (B) Blue Neutral Black
	ii) 1 phase AC Connections Phase Red / Yellow / Blue (as per associated circuit) Neutral Black
	iii) DC Connections Positive White Negative Grey
	iv) Earth Connection Green

	d) Where wiring passes from one compartment to another, the aperture shall be 'Bushed' to prevent damage to wires against sheet metal edges. Bushes may comprise of good quality rubber / PVC grommets.
	e) Every wire end shall be fitted with numbered ferrules of white or yellow colour having glossy finish with identification number engraved in black. Ferrules shall be made of moisture and oil resisting insulating material. Ferrules shall be of interlocked type or tight fitting type. Ferrules shall be so fitted that they will not get detached, when the wire is removed from the terminal.
	f) System of marking of wiring shall be as per applicable standard.
	g) All wires used internally shall have crimped on tinned copper lugs for terminations.
	h) Terminal boards shall be stud type with insulating barriers of adequate height.
	i) Terminal boards shall have separate terminals for incoming and outgoing wires with not more than two wires connected to any one terminal.
	j) Terminal boards shall be mounted vertically or in the horizontal rows and properly spaced to have clean wiring arrangement, adequate access for putting ferrules, making terminations etc. It shall be possible to read the ferrule numbers when the wiring is complete. Where terminals may be live when the equipment is isolated from the main supply, these shall be clearly marked near the terminal boards.
41.6	Cable Terminations
	a) All cables, either incoming or outgoing to the LDB/ WDB, shall be terminated in a cable chamber. For each panel, there shall be a cable chamber on the side. The door of cable chamber should open or be locked with the help of a tool. Unless stated otherwise in Data Sheet A, all cables shall enter from the bottom.
	b) Removable undrilled gland plates of sheet steel shall be provided in the cable chamber for entry of cables. Minimum thickness of gland plate shall be as per Data Sheet-A. The gland plate shall be of adequate size for connecting requisite number of cable glands for power and control cables.
	c) Heavy duty bolt-on termination tinned copper lugs of compression type shall be used for power cable termination. The tinned copper cable lugs for all incoming and outgoing power cables shall be supplied by the vendor.
	d) For supporting and clamping of cable cores at regular interval in cable alleys, suitable slotted angle upto the respective terminal blocks shall be provided.
41.7	Earthing
	a) An earth busbar of adequate size of shall be provided at the bottom for the entire length of the LDB/ WDB. Material of earth busbar shall be GI unless mentioned otherwise in Data Sheet A.
	b) Every metal part other than those forming parts of an electrical circuit shall be connected to the earth bus by means of high conductivity copper wire of size not less than 2.5 sq. mm. cross-sectional area.
	c) Doors shall have a flexible copper wire for earth connection to fixed unit.
	d) Each LDB/ WDB shall be fitted with two earthing studs located in accessible position on sides for connection of internal earth busbar to the external earthing connection.
	e) Earth busbar shall be brought outside LDB/ WDB for making external connections.
41.8	Types of LDB/ WDB
	a) The LDB/ WDB shall be of following type: (i) LDB/ WDB-H (n) - AC LDB/ WDB with 100 kVA transformer (ii) LDB-F (n) - AC LDB with 50 kVA transformer (iii) LDB-D (n) - DC LDB NOTE: (n) indicates number of outgoing feeders.
	b) AC LDB/ WDB (LDB/ WDB-H, LDB-F) Each LDB/ WDB shall comprise of the following and comply with Data Sheet A : i. One/Two lighting/welding transformer (LDB/WDB-H & LDB-F) as per BOQ. ii. Incomer(s) of TPN MCCB as per Data Sheet A. MLDB/WDB with Lighting/Welding Transformers (2 no's of MCCB both at primary and secondary end of transformer shall be provided) iii. Set of busbars with 3 phase and neutral. iv. TPN MCCB for each outgoing circuit. v. Three indicating lamps with fuses for indicating bus supply ON. vi. CT operated ammeter with selector switch. vii. VT operated voltmeter with selector switch. viii. Power & control terminals, earth-stud, earth busbar, designation labels, internal wiring, power cable lugs, glands etc. shall be provided to complete the LDB/ WDB in all respects.
	c) DC LDB (LDB-D)
	Each LDB shall comprise of following and comply with enclosed Data Sheet A :
	i. Incomer & Outgoing feeders shall be as per Datasheet-A.

	ii. Two pole DC contactor on the incoming circuit for changeover to DC in case of AC normal supply failure.
	iii. One under voltage relay of suitable range, if required.
	iv. One test push button.
	v. Set of busbars for positive and negative.
	vi. Two indicating lamps with fuses for indicating bus supply ON.
	vii. Power & control terminals, earth-stud, earth busbar, designation labels, internal wiring, power cable lugs, glands etc shall be provided to complete the LDB in all respects.
41.9	LIGHTING PANELS (LPs)
41.9.1	General Requirements of Lighting Panels
	a) LPs shall be totally enclosed, suitable for electrical system data as specified in Data Sheet A. The LP shall be suitable for mounting on wall / column / structure.
	b) Panels shall be suitable for indoor / outdoor application as per Data Sheet A.
	c) All components of the LP shall be fully mounted inside the panel. LPs shall have only one operational front. Door shall be provided to give full access to all the components. Door shall have padlocking arrangement.
	d) LPs shall consist of dust and vermin proof cubicles without the use of louvers.
	e) Good quality synthetic rubber / neoprene gaskets shall be put around the door. The door when closed, shall compress the gasket uniformly.
	f) The LPs shall be designed to prevent contact with live parts when the front door is open.
	g) All busbars (phase, neutral, positive, negative as applicable) within a panel shall be of the same size.
	h) All control wiring inside the panels shall be carried out with 1100 V grade, PVC insulated flexible copper wire of min 1.5 sq. mm size.
	i) The rated continuous current of the equipment and components shall be as given in Datasheet-A. These ratings shall be obtained with the components mounted in their housing as in service without exceeding the permissible temperature rise.
	j) Each LP shall be fitted with M.S. mounting brackets.
	k) Panel shall be suitable for top / bottom cable / conduit entries. However, outdoor LPs shall have bottom cable / conduit entry. Removable undrilled gland plate of sheet steel shall be provided for entry of cables. Minimum thickness of gland plate shall be as per Data Sheet-A. The gland plate shall be of adequate size having knock-outs for requisite number cable connections. Gland plate shall be provided with gasket.
	l) The lighting panel shall be complete with Aluminium busbars, and shall incorporate incomer and outgoing circuits as per Data Sheet-A. Number of outgoing circuits shall be as per BOQ.
	m) Each lighting panel shall be fitted with two GI earth studs located in accessible position on the outside of the panel on opposite sides.
	n) All metal parts of the panel except current carrying parts shall be bonded together electrically to the earthing stud.
	o) Each panel shall be fitted with phase barriers of fireproof insulating material in such a manner that it is not readily possible for personnel to touch the phase busbars. Insulating sheet shall be fitted around the MCBs such that only the surface and toggle of the MCBs are available on the front.
	p) The supply of cable lugs for power and control cable connections forms part of the supply of equipment.
	q) Each panel shall be provided with a circuit directory plate with inscriptions neatly typed and laminated, fitted on the inside of door.
	r) All MCBs/Isolators/Switches/Contactors etc. shall be mounted inside the panel and a fibre glass sheet shall be provided inside the main door such that the operating knobs of MCBs etc., shall project out of it for safe operation against accidental contact.
	s) Terminal bocks shall be 1100 V grade, clip-on stud type, made up of polymide 6.6 or better suitable for terminating multicore 35 or 70 Sq. mm. stranded aluminium conductor incoming cable and 10 Sq. mm. stranded aluminium conductor for each outgoing circuits voltage. All terminals shall be shrouded, numbered and provided with identification strip for the feeders.
	t) MCB's shall be current limiting type with magnetic and thermal release suitable for manual closing and automatic tripping under fault condition. MCB's shall have short circuit interrupting capacity of 9 KA rms. MCB knob shall be marked with ON/OFF indication. A trip free release shall be provided to ensure tripping on fault even if the knob is held in ON position. MCB terminal shall be shrouded to avoid accidental contact.
	u) Contactors of AC lighting panels shall be 3 no's,63 A, single pole continuous duty MCB, with neutral link,load make-break type suitable for 415 V, 3 phase 4 wire system
	v) DC switches shall be rotary type, 2 pole, continuous duty, load break type, quick make quick break, suitable for 220 V DC, 2 wire system. Switch knob shall be provided with ON/OFF indication.

	w) Programmable Digital Timer shall be Electronic Astronomical Almanac Time switch with battery backup of min. TEN years, 4 Digit LED display, 24 hours range, manual override facility, 10 Amp 3 relay output, with NO/NC Contacts suitable for operation on 240V single phase AC supply.
	x) Thickness of CRCA sheet steel shall be 2 mm for all Lighting panels.
	y) LPs shall be with elegant finish. LPs shall be powder coated with color shade RAL9002.
41.9.2	Type of Lighting Panels
	a) LP-A (n) - AC Lighting Panel
	b) LP-D (n)- DC Lighting Panel
	c) LP-(DECORATIVE) A (n)- DECORATIVE TYPE Lighting Panel
	d) LP-S (n)- Street Lighting Panel
	e) LP-(3) - LP OUT DOOR TYPE LP-E(24) WITH 3 KVA TRF
	Each lighting panel (LP-3) shall be fed from a 415V/24V, 3 phase-4 wire, 3 KVA transformer. The transformer shall be located inside the lighting panel itself. Transformers shall be dry type, natural air cooled with class F insulation or better. Impedance of transformer shall be 5%. Transformers shall be tested as per IS:11171. Off-circuit tap changer with +/- 5% in steps of +/- 1.25% tapping shall be provided. One minute power frequency withstands voltage for lighting transformer shall be 2.5 KV. **Fixed type 24V sockets shall be provided in following areas: Boiler area: Near inspection manholes on boiler platforms and boiler drum TG Building: Near HP & LP Heaters, turbine flash tank, blow down tank, near condenser water box, near generator and near bus duct termination of generator end. ESP area: Near inspection manholes. Other area: Near Deaerator**
	NOTE: (n) indicates number of outgoing circuits. ELCB in Incomer to be provided for outdoor area LPs
41.9.3	AC Lighting Panel (LP-A)
	a) LPs shall be provided with incomer and requisite number of outgoing circuits as per Data Sheet-A. Number of outgoing circuits shall be as per BOQ.
	b) Separate neutral shall be available at terminal block for each outgoing circuit.
	c) Construction of AC Normal and AC Emergency panels shall be same.
41.9.4	DC Lighting Panels (LP-D)
	a)— LPs shall be provided with incomer and requisite number of outgoing circuits as per Data Sheet-A. Number of outgoing circuits shall be as per BOQ.
41.9.5	Decorative Type Lighting Panels (LP-A)
	a) Decorative lighting panels shall be designed for use in areas like air conditioned Control room, office, conference room etc.
	b) LPs shall be provided with incomer and requisite number of outgoing circuits as per Data Sheet-A. Number of outgoing circuits shall be as per BOQ.
	c) LPs shall be suitable for either surface or flush mounting. Flush mounted panels shall have the collared door suitable for matching with the wall.
	d) Lighting Panels may be provided with transparent acrylic cover for operation of MCBs.
	e) LPs shall be provided with knockouts on the top, bottom and sides.
41.9.6	Street Lighting Panel (LP-S)
	a) Street Lighting Panels shall be provided for feeding power supply to luminaires of street light poles, flood lighting poles, lighting masts, watch towers etc.
	b) Each Street Lighting Panel shall comprise of the following :
	i. One TPN door interlocked MCB in incomer. Interlock defeat feature shall also be provided.
	ii. Three pole AC Contactor
	iii. 0 - 24 hrs timer for automatic switching of contactor
	iv. Three phase & neutral busbars
	v. Single pole or three pole MCBs for each outgoing circuit as per Data Sheet A
	vi. Two lamps for bus supply ON & OFF indications
	vii. Complete wiring arrangement as per control scheme.
	viii. Auto-Manual selector switch
	ix. ON push button
	x. OFF push button
	C) Switching ON and switching OFF shall be through both 0 - 24 hrs timer in automatic mode.

	d) Internal power wiring shall be done with PVC insulated Cu wire of suitable size. All control wiring inside the panel shall be carried out with 1100 V grade, PVC insulated flexible copper wires.
	e) Two nos. outgoing circuit in each panel shall be tapped before contactor for watch tower supply.
41.10	COMPONENTS OF LDB/WDB AND LIGHTING PANEL
41.10.1	MOULDED CASE CIRCUIT BREAKERS
	a) Moulded case circuit breakers (MCCBs) shall be provided as per Data Sheet A. MCCB shall meet the requirements stipulated in Data Sheet A.
	b) MCCBs in AC circuits shall be of triple pole construction arranged for simultaneous three pole manual closing and opening and for automatic tripping at short circuit and overload. Neutral link shall be provided for LDB/ WDB without transformers.
	c) Operating mechanism shall be quick make, quick break and trip free type.
	d) The ON, OFF & TRIP positions of the MCCB shall be clearly indicated so as to be visible to the operator when mounted as in service. Operating handle shall be provided on front of the LDB/ WDB.
	e) MCCBs shall be capable of withstanding the thermal stresses caused by overloads and short circuits. The maximum tripping time under short circuit shall not exceed 20 milli-seconds.
	f) MCCB terminals shall be shrouded and designed to receive cable lugs for cable sizes relevant to circuit ratings.
	g) Under voltage releases and other releases shall be provided as specified in data Sheet-A.
41.10.2	SWITCH-FUSE UNITS
	a) These units shall preferably comprise of switches having integral fuses, called composite units. Alternatively, combination units of separate switch and fuse may also be acceptable.
	b) These units shall be provided for general purpose i.e. incoming or outgoing units.
	c) The units shall be of the air break air insulated type and designed to ensure safety to operating personnel.
	d) Composite units shall have integral fuses i.e. fuse carrier with fuse link (fuse link forming the moving contact). The design shall ensure that the moving contact is not live when switch is open i.e. in OFF position, so as to facilitate removal of fuse.
	e) The switch shall be capable making and carrying the system prospective fault current, but limited in magnitude and duration by the cut off characteristics of the largest HRC fuse link that may be fitted to that unit.
	f) The fixed contact shall be so shrouded that maintenance of the unit can be carried out in safety with the busbars live.
	g) Where one isolating switch is used as the incoming device, the incoming side fixed contacts shall be shrouded to ensure that maintenance can be carried out with the remote fuse and switch closed.
	h) Composite switch-fuse or the combination of switch and fuse shall meet the requirements of its components as follows:
	Isolating Switch :
	i. Switches shall be air-break, quick make, and quick break heavy duty type conforming to applicable standard.
	ii. All switches shall have visible ON / OFF position indication and shall be padlockable in any (ON / OFF) position.
	iii. Switches shall be door interlocked such that it shall not be possible to gain access to inside the unit unless the isolating switch is in OFF position.
	iv. The switches shall be suitable for independent manual operation.
	v. The switch contacts shall be of silver alloy or silver plated copper and springs of non-corrosive material.
	vi. Inter-phase barriers shall be provided to prevent possibilities of phase to phase fault in the switch. The switch shall also be shrouded from all sides to prevent access to live parts on the switch after opening the unit door. The barriers and shrouding shall extend upto the height of switch to fully enclose both side terminals of the device. The arrangement shall permit easy maintenance.
	High Rupturing Capacity (HRC) Fuses
	i. The fuse serving as the short-circuit protective device in isolating fuse-switch units shall be of HRC cartridge, current limiting and plug-in non-deteriorating type.
	ii. The fuse carriers shall be easily withdrawable for replacement of fuse. Insulated fuse pullers shall be provided where fuses are not mounted in insulating carriers to remove and replace fuses in live conditions.
	iii. Fuses shall preferably be fitted with a device to indicate operation (i.e. when the fuse has blown).
	iv. Live terminals of fuse bases shall be shrouded to prevent contact with personnel where fuse links are not mounted in carriers and are directly plugged into the fuse base. Inter-phase barriers extending throughout the length of the fuse base shall be provided to prevent inter-phase short circuit. They shall be shrouded from all sides to prevent accidental contact.
	v. Fuse carriers and bases shall be of good quality moulded insulating material. Porcelain fuse bases and carriers will not be accepted.
	vi. The rating and characteristics of fuse links shall be chosen appropriately for short circuit protection of circuits downstream.
41.10.3	MINIATURE CIRCUIT BREAKERS

	a) The use of miniature circuit breakers (MCBs) combining thermal overload and magnetic short circuit protection shall be application for the outgoing circuits of Lighting Panels.
	b) MCBs shall have suitable rating as specified in Data Sheet A.
	c) MCBs shall be suitable for housing in the lighting panel and for connection of copper link bus bar at the incoming and copper lugs at the outgoing ends.
	d) The terminals of MCB and ON/OFF positions shall be clearly and indelibly marked.
41.10.4	CURRENT TRANSFORMERS
	a) CTs shall be air insulated having insulation class E or better, cast resin type and shall be capable to withstand the thermal and mechanical stresses resulting from maximum short circuit.
	b) The short time current duration for CTs shall be one second.
	c) CT primary current shall not be less than the full load thermal rating of the associated circuit. CT secondary current shall be as specified in Data Sheet A. Polarity shall be marked in a suitable manner. The ratings shall be adequate to cater for the burden of connected instruments.
	d) CTs shall be of bar primary / wound primary / ring type capable of carrying the rated primary current.
41.10.5	VOLTAGE TRANSFORMER (if required)
	a) Voltage transformers (VT) shall be dry, cast resin type, insulation class E or better and comprising of single phase or three phase units. They shall have their primary windings protected by current limiting fuses with interrupting capacity corresponding to that of the lighting board / panel.
	b) VT secondary windings shall be earthed in LDB/ WDB / LP through link, which can be removed for insulation testing.
	c) Three phase voltage transformers shall be as per Data Sheet A.
	Single phase VTs shall have voltage rating of (Nominal System Voltage / √3) V / (110 / √3) V so that secondary voltage shall be 110 volts phase to phase when the secondary winding is star connected.
	d) VTs shall have an output rating adequate to cater to the burden connected to them.
41.10.6	INDICATING METERS
	a) Meters shall be panel mounted, flush type and suitable for rear terminal connection.
	b) Meters and instruments shall be enclosed in dust proof, moisture resistant black finished cases and shall be suitable for tropical use. Instruments shall be suitable for operation from the secondary windings of CTs and VTs.
	c) All instruments shall be calibrated to enable direct reading of primary quantities. Instruments shall be adjusted and calibrated at manufacturer's works and shall have means of calibration, checking and zero adjustment at site.
	d) All the divisions and the quantity to be measured shall be clearly marked. Instruments shall conform to applicable standard having black numerals and lettering on white anti-parallax dial with knife edge pointer. Indicating instruments shall be of moving iron type for AC and moving coil type for DC circuits.
	e) Instruments having metallic cases shall be fitted with earthing terminals.
41.10.7	CONTACTORS
	a) Contactors shall be of the air break type fitted with arc shields.
	b) The operating coil shall be suitable for satisfactory operation in the range of 85% - 110% of nominal voltage specified under the Data Sheet A. The coil shall be tropicalized having insulation not less than class 'E'.
	c) Electrically independent auxiliary contacts not less than 2NO + 2NC for interlocking and indication shall be fitted to individual power contactor.
	d) All springs shall be made out of a corrosion proof material.
41.10.8	RELAYS
	a) Relays shall be provided on the various circuits as per schemes. Relays shall be flush mounted on front of the board. Relay case shall be painted with dull black or egg shell black enamel and with back connected terminals. Metal cases and frames of relay shall be earthed.
	b) All relays shall be of withdrawable type with built-in testing facilities, with provision for inspection, maintenance and replacement. Where built-in test facility is not provided for a particular relay, separate suitable test block shall be provided on the board for this purpose.
	c) Relay performance shall not alter due to mechanical shock or vibration or external magnetic field which may be present at the place of mounting.
	d) Each relay shall not have less than two independent pairs of contacts.
41.10.9	TIMERS
41.10.9.1	Time Switch
	a) Time switch shall be suitable for automatic switching ON and OFF of street lighting / flood lighting circuits.
	b) Time switch have 00 - 24 hrs clock base.

	c) Time switch shall indicate actual time and shall permit accurate time setting.
	d) Time switch shall be rugged, independent of normal fluctuations of voltage / frequency and free from maintenance.
	e) Contact rating, clock accuracy, rated voltage rating and frequency rating of timer shall be suitable to its application.
	f) Time switch shall be provided with Ni-Cd battery.
	g) Time switch shall be suitable for mounting inside the panel.
41.16.9.2	On/Off Delay Timer
	a) On delay timer shall be required for continuation of DC supply for a limited duration when the AC Emergency supply has been restored and DG set is under stabilisation.
	b) Timer shall be fully static and suitable for operation on normal frequency and system voltage.
	c) Timer shall have high setting accuracy, high repeat accuracy, low reset time and low power consumption.
	d) Timer shall have the time setting range as mentioned in Data Sheet A.
	e) Timer shall be suitable for mounting inside the panel.
41.10.9.3	SELECTOR SWITCHES
	a) The rating and other features of the switches shall be suitable for the application. The number of positions and the number of contacts required for each switch shall be as indicated in the schemes
	b) Selector switches shall be stay put type, provided with properly designated escutcheon plates clearly marked to show operating position.
	c) Terminals carrying potential above 120 Volts shall be shrouded to prevent accidental contact with personnel.
	d) Ammeter selector switches shall have make before break contacts.
	e) The switches shall be suitable for semi-flush mounting with the front plate and operating handle projecting out. All connection to the switches shall be from the back.
	f) The arrangement for front mounting of these devices shall be such as to make them reasonably dust free so as not to interfere with normal operation.
41.10.9.4	PUSH BUTTONS
	a) Push button shall be heavy duty, flush mounted suitable for the application.
	b) Push button shall be provided with integral escutcheon plates marked with its function identified as per schemes.
	c) Colour shall be appropriate to the function.
	d) Minimum number of contacts shall be 2 NO + 2 NC or as per the requirements of control scheme.
41.10.9.5	INDICATION LAMPS
	a) Indication lamps shall be complete with lens covers and holders.
	b) Each lamp shall be fitted with a durable resistance integrally wired in series with the lamp. Alternatively, lamps with built in transformers are acceptable.
	c) The lamp cover (lens) shall be translucent of appropriate colour.
	d) Bulbs and covers shall be interchangeable, easily replaceable from the front without the need for any special means.
	e) Terminals having potential above 120V shall be shrouded to prevent contact with personnel.
	f) Terminals shall be suitable for ring type copper cable lugs of size depending upon the circuit rating.
41.10.9.6	CABLE GLANDS
	a) Whether specifically mentioned or not, cable glands of suitable sizes shall be supplied along with each equipment for power and control cables.
	b) Rubber components used in the gland shall be of neoprene.
	c) Name / trade name of manufacturer, type no. and applicable range of outer diameter of cable shall be engraved / indelibly printed on the cable gland.
41.10.9.7	CABLE LUGS
	a) All equipment shall be supplied with the power and control cable lugs of suitable size, whether specifically mentioned or not.
	b) Name / trade name and size of lug shall be engraved/ indelibly printed on each cable lug.
41.10.9.8	TERMINALS
	a) Terminals shall be stud type of copper material.
	b) Terminals shall be provided with transparent cover(s).
	c) Separate terminals shall be available for each termination of loop-in and loop-out power connections.
41.11	LABELING
41.11.1	Labels to identify all the Main assemblies, Sub-assemblies and components of the LDB/ WDB and LPs shall be provided.
41.11.2	Name and rating plate / marking shall be provided as required by relevant standard applicable to each component / assembly to be identified.

41.11.3	Labels shall be of two colour, three layer plastic material with matt or semi matt finish or of the anodised aluminium sheet.
41.11.4	All labels other than "Danger" or "Warning" labels shall have black lettering on a white background. Danger labels shall be as per applicable standard and shall not be affixed on to removable parts.
41.11.5	All labels shall be securely fixed on to the equipment by means of self tapping screws or other approved means.
41.11.6	Stick-on type labels of good quality and permanent mounting shall be acceptable for internally mounted components only.
41.11.7	A list of all such items to be labelled and text and type of labels to be provided is given below:
41.12	a) BOARD DESIGNATION (MAIN EQUIPMENT LABEL)
	i.Inscription :
	Designation & LDB/ WDB number for LDB/ WDB.
	Designation and LP number for LPs.
	ii. Location :
	Top centre in the front of the LDB/ WDB.
	Top centre in the front of the LP.
	iii. Material :
	3 Layer plastic material, fixation by self-tapping, non-rusting screws, black inscription on white back ground.
	b) OUTGOING - FEEDER DESIGNATION
	i. Inscription: Module number, LP number / purpose. ii. Material: Black engraving on white anodised aluminium plate of thickness 1.6 mm or more. Plate to be secured with screws.
	c) COMPONENT DESIGNATION
	i. Inscription: Letter symbol / Legend as assigned in schemes. ii. Location: Near or on the component iii. Material: Stick-on type
41.13	CIRCUIT DIAGRAM / DIRECTORY PLATE
	a) A diagram is to be prepared for fixing to the inside cover of every lighting panel giving details of the points controlled by each circuit.
	b) The circuit list shall be typed or printed stating the location of the equipment served, rating of the protective unit and the circuit loadings.
	c) The list shall be mounted on the inside of the cover door and shall be protected by an acrylic sheet cover to be easily removable to permit circuit modifications.
41.14	SURFACE TREATMENT
41.14.1	All metal parts and the surfaces (exterior & interior) of equipment, unless stated otherwise in case of reflectors, shall be degreased by dipping in hot alkaline solution and rubbed with wire brush to remove oil & scale from them & then rinsed in water. Alternatively, they may be shot / sand blasted.
41.14.2	Parts shall be pickled by dipping in hydrochloric acid tank to remove the rust from the surfaces formed during storage of sheets & then rinsed to remove traces of the acid. The cleaning and pretreatment of all metal parts shall be as per applicable standard.
41.14.3	The surfaces to be painted shall then be prepared by phosphatizing to protect them from further rusting & to create a good bond with the paint. The pretreatment shall conform to the applicable standard.
41.14.4	All parts shall then be subjected to a coat of red oxide primer paint.
41.14.5	All inside and outside surfaces of panel shall be spray painted with synthetic enamel of the shade and minimum thickness as per Data Sheet A.
41.14.6	Electrostatic or powder painting shall be acceptable subject to purchaser's approval.
41.14.7	Wherever possible, finished parts shall be coated with peelable compound by spraying method to protect the finished product from scratches, grease, dirty and oily spots during handling and transportation.
42.0	Bidder after award of contract shall prepare all GA, schemes and lighting layout drawings in AUTOCAD. Both hard as well soft copies of drawing/documents will be required for the purchaser's review/ approval. All equipment shall be identified and addressed with its KKS designations (if required) in the Lighting design calculation, Lighting layout drawing and conduit layout drawing.

TECHNICAL DATA - PART - A

SL.NO		UOM	DETAIL
1.0	**DESIGN CODES & STANDARDS**		
1.1	Code of practice for interior illumination		IS 3646
1.2	Code of practice for industrial lighting		IS 6665
1.3	Code of practice for lighting of public thoroughfare		IS 1944
1.4	Luminaires		IS 10322
1.5	General Lighting. LEDs & LED Modules Terms and definitions		IS 16101
1.6	Self-Ballasted LED lamps for General Lighting Services: Safety requirement.		IS 16102-1
1.7	Self-Ballasted LED lamps for General Lighting Services: Performance requirement		IS 16102-2
1.8	LED modules for General lighting safety requirements.		IS 16103-1
1.9	Lamp Control gear.		IS 15885-2
1.10	A.C. or D.C. supplied Control gear for LED modules		S 16104
1.11	Method of measurement of Lumen maintenance of solid state (LED) sources		IS 16105
1.12	Method of electric and photometric measurement of solid state (LED) products		IS 16106
1.13	Luminaires performance		IS 16107
1.14	Plugs and socket outlets of rated voltage upto and including 250 volts and rated current upto and including 16 amperes		IS 1293
1.15	Interlocking switch socket outlet		IS 4160
1.16	Electric ceiling type fans and regulators		IS 374
1.17	Recommended practice for hot dip galvanising of iron & steel		IS 2629
1.18	Method of testing uniformity of coating on zinc coated articles		IS 2603
1.19	Flexible steel conduits for electrical wiring		IS 3480
1.20	Scaffolds & ladders - Code of safety		IS: 3696
1.21	Aluminium extension ladders		IS: 4571
1.22	Low voltage switchgear and control gear.		IS 60947
1.23	Dry type transformers		IS 11171
1.24	Low voltage fuses for voltages not exceeding 1000V AC or 1500 V		IS 13703
1.25	Code of practice for selection, installation and maintenance of switchgear and control gear.		IS 10118
1.26	Electrical Accessories - circuit breakers for over protection for household and similar installations		IS 60898

1.27	Visual indicator lamps		IS 1901
1.28	Explosive atmospheres		IS 60079
1.29	Classification of hazardous areas (other than mines) having flammable gases and vapours for electrical installation		IS 5572
1.30	Danger notice plates		IS:2551
1.31	Tubular steel poles for over head power lines		IS 2713
1.32	Code and practice for design loads for structures		IS 875 Part III, 1987
1.33	Code of practice for general construction in steel		IS 800
1.34	European structural steel standard (Grade of M.S. plate)		BS-EN 10025/ DIN 17100
1.35	Code of practice for phosphating of iron and steel		IS 6005
1.36	Colour for ready mixed paints & enamels		IS 5
1.37	Method of sampling for steel pipes, tubes & fittings		IS 4711
1.38	Steel tubes for structural purposes		IS 1161
1.39	Specification for hot dip zinc coatings, on structural steel and allied products		IS 4759
1.40	Specification for structural Steel		IS: 226
2.0	**DESIGN /SYSTEM PARAMETERS**		
2.1	Design ambient temperature	ºC	50 ºC
2.2	AC Supply		
2.2.1	Rated voltage	V	415
2.2.2	Rated frequency	Hz	50
2.2.3	Voltage variation (permissible)	%	+10% to -10%
2.2.4	Frequency variation (permissible)	%	+3% to -5%
2.2.5	Combined voltage & frequency variation (sum	%	10%
2.2.6	System fault level & duration	KA/sec	50 KA at incoming of Lighting/Welding transformer, 9kA at secondary side of Lighting/Welding Transformer
2.3	DC Supply		
2.3.1	Rated voltage	V	220
2.3.2	Voltage variation (permissible)	%	-15% to +10%
2.4	Lighting Concept: Types of supplies considered (other than AC Normal)		
2.4.1	AC emergency		Applicable
2.4.2	DC emergency		Applicable
3.0	**CONSTRUCTION FEATURES**		
3.1	**Lighting Fixtures**		

3.1.1	Lighting Fixture type and description	UOM	Total Luminous Flux (Lumen) of Luminaire – Min. Value, Measured Electrical Input Power (Watt) of Luminaire – Max. Value (The luminaire efficacy shall be not less than 100 Lm/W.)
3.1.1.1	**FC06(LED)** : Industrial type LED fixture suitable for conduit /surface/ suspended mounting, with integral driver aesthetically designed for Switchgear / Equipment room / Staircase / Corridors	Lumen, W	4200, 42
3.1.1.2	**FC07 (LED):** Industrial type LED fixture suitable for conduit/ surface/ suspended/ column mounting with integral driver. Fixture shall operate at 220 V DC supply. Necessary accessories like DC to AC convertor etc. to be included in fixture, if required.	Lumen, W	1400, 14
3.1.1.3	**FC30 (LED)** : Panel 600 mm X 600 mm LED luminaire suitable for recess mounting in false ceiling with integral driver aesthetically designed for Control Room/ Office	Lumen, W	3600, 36
3.1.1.4	**FC30 (LED)-Dimmable :** Panel 600 mm X 600 mm LED luminaire Dimmiable type suitable for recess mounting in false ceiling with integral driver aesthetically designed for Control Room/ Office	Lumen, W	3600, 36
3.1.1.5	**FC33 (LED):** Decorative, recessed type LED fixture (down lighter) with integral driver. Fixture shall operate at 220 V DC supply. Necessary accessories like DC to AC convertor etc. to be included in fixture, if required.	Lumen, W	1400, 14
3.1.1.6	**FC34 (LED):** Bulkhead type, dust proof type LED fixture suitable for column mounting with integral driver. Fixture shall operate at 220 V DC supply. Necessary accessories like DC to AC convertor etc. to be included in fixture, if required.	Lumen, W	1400, 14
3.1.1.7	**FC81 (LED):** Corrosion proof, totally enclosed type LED fixture with integral driver. Industrial type LED Fixture suitable for Battery rooms.	Lumen, W	4200, 42
3.1.1.8	**SB11 (LED):** Low Bay, Industrial type LED fixture with integral driver.	Lumen, W	10000, 100
3.1.1.9	**SB02 (LED):** Medium Bay, Industrial type LED fixture with integral driver.	Lumen, W	16500, 165

3.1.1.10	**SB03 (LED):** High Bay, Industrial type LED fixture with integral driver.(Mounting Height > 10M)	Lumen, W	24000, 240
3.1.1.11	**SF63 (LED):** Flood light type Heavy duty LED fixture with integral driver.	Lumen, W	13500, 135
3.1.1.12	**SF64 (LED) :** Flood light, heavy duty type LED fixture with integral driver.	Lumen, W	27000, 270
3.1.1.13	**SS62 (LED):** Street light, LED fixture with integral driver.	Lumen, W	13000, 130
3.1.1.14	**SS63 (LED):** Street light, LED fixture with integral driver.	Lumen, W	16000, 160
3.1.1.15	**SW41 (LED):** Well glass, vapour proof, Dust proof LED fixture with integral driver suitable for Boiler / ESP platforms	Lumen, W	4200, 42
3.1.1.16	**SW42 (LED):** Well glass, vapour proof, Dust proof LED fixture with integral driver suitable for Boiler / ESP platforms	Lumen, W	7900, 79
3.1.1.17	**MW96 (LED):** Well glass, flame proof increased safety luminaire LED fixture having an integral driver suitable for hazardous areas	Lumen, W	6200, 62
3.1.1.18	**Downlighter (LED)** : Recessed Mounted Down-lighter with Integral driver aesthetically designed for Control Room / Office	Lumen, W	1800, 18
3.1.1.19	**Downlighter (LED) – Dimmable** : Recessed Mounted Down-lighter Dimmiable type with driver aesthetically designed for Control Room / Office	Lumen, W	1800, 18
a	Cove lighting shall be provided for better aesthetics in false ceiling of Common Control Room (CCR) and service building.		
b	Type of false ceiling for recessed LED luminaire		Grid False ceiling (600mm X 600mm)/Gypsum false ceiling (for Control Room and service building).
c	Degree of protection for luminaires		Outdoor: Min IP65 and weather Proof Indoor: Surface / pendant mounting :IP54 Recess mounting (false ceiling): IP20.
d	Hazardous area classification of flameproof/explosion proof lighting fixtures		Zone-2, Group IIA/IIB/IIC
e	Type of LED Lamps		Cool Daylight
3.2	**Emergency Lighting Unit**		
a	Lamp type		LED
b	Nos. of Lamp		2
c	Lamp wattage	W	**9**
d	Type of battery		Ni-Cd
e	Battery voltage	V	9

f	Battery backup time	Hrs	4
g	In-built charger		YES
3.3	**Exit Sign**		
a	Lamp type		LED
b	Nos. of Lamp		1
c	Lamp wattage	W	5
d	Type of battery		Ni-Cd
e	Battery backup time	Hrs	0.5
3.4	**Junction Box (other than Street Light Junction box)**		
a	Type of terminals		Four (4) way stud type
b	Size of wire for termination	mm2	Shall be for terminating upto 2 nos. 2.5 mm2 copper wire on each terminal
c	Size of cable for termination (from JB to fixture)	mm2	minimum 1.5 mm2 copper wire
d	Type of installation		Suitable for outdoor installations
e	Enclosure material		Fire retardant material for indoor application . Thermoplastic / thermosetting / FRP type
f	Enclosure thickness	mm	3 mm
g	Degree of protection		IP-55 for indoor & IPW-55 for outdoor
3.5	**Industrial/ Welding Receptacle**		
a	Enclosure material		MS sheet & hot dip galvanised / Die cast aluminium alloy / CRCA sheet steel with electrostatic powder coating
b	Enclosure thickness	mm	2 mm (min) for MS sheet & hot dip galvanized / 2.5 mm (min) for die cast aluminium alloy / 2 mm (min) for CRCA sheet steel with electrostatic power coating
c	Process of galvanization		Hot dip galvanized
d	Weight of zinc (Thickness)	g/m2 (micron)	460 g/m2 (65 micron)
e	Degree of protection		IP-55
f	other details		
g	Single Phase (20A) Industrial receptacle-RA		20A, 240V, 1-phase, 2 pole, 3-pin (third pin scrapping earth) porcelain, metal clad socket with a metallic cover tied to it
i	Switch		The ON-OFF switch shall be Rotary, heavy duty 20A switch conforming to applicable standard.
ii	Plug		Shrouded, die-cast aluminium plug, Socket shall be provided with lid safety cover.

iii	Interlock		It shall be combined interlocked weather proof industrial unit
iv	Mechanical interlock		(i) Switch can be put ON only when plug is fully engaged.
			(ii) Plug can be withdrawn only when switch is in OFF position.
			(iii) Cover can be opened only when switch is in OFF position.
v	Water protection		The arrangement should ensure that water does not enter the plug when socket is ON
vi	Loop-in loop-out terminals		Loop-in loop-out terminals shall be provided inside the box suitable for 4 mm2 Cu wire.
h	Three Phase (63A) Welding receptacle-RC		63A, 415V, 3-phase-neutral earth, metal clad socket with cover
i	Switch		Rotary, heavy duty 63A switch conforming to applicable standard.
ii	Plug		Shrouded, die-cast aluminium plug
iii	Interlock		It shall be combined, interlocked weather proof industrial unit.
iv	Mechanical interlock		same as that are applicable for RA type receptacles
v	Cable Size		The receptacle boxes shall be suitable for entry and exit of 3.5CX95 mm2
vi	Loop-in loop-out terminals		Al conductor PVC cable and loop-in loop-out terminals for the same shall be provided such that not more than one core is terminated at one terminal. Removable, undrilled cable gland plate shall be provided. Tinned copper lugs and double compression cable glands shall also be supplied by the bidder.
vii	Protection		RCCB/RCD of 30mA sensitivity having facility for manual testing/checking of operation of RCCB/RCD
3.6	**Decorative Receptacle**		
a	Enclosure material		CRCA sheet steel
b	Enclosure thickness	mm	2 mm
c	Surface treatment		Galvanized
d	Process of galvanization		Hot dip galvanized
e	Weight of zinc (Thickness)	g/m2 (micron)	460 g/m2 (65 micron)
f	Degree of protection		IP-20

g	other details		(i) Combination of 6A & 16A, 240V, 1-phase, 2 pole, 3-pin, third pin grounded socket with integral piano key type 16A decorative switch, flush mounted on decorative backelite (6 mm thick)/ perspex (3 mm thick) sheet as cover of the boxes. (ii) Loop-in loop-out terminals similar to type RA shall be provided. These will be located in office areas.
3.7	**Switch Box**		Modular Type switches to be provided
a	Enclosure material		Galvanized MS Sheet.
b	Enclosure thickness	mm	1.6mm MS sheet with 3mm thick decorative, Perspex cover.
c	Degree of protection		IP-20
d	Switchboard types		(i) Type SWB1 - Switch board with 2 no. 5A switch, JB type SW1. (ii) Type SWB2 - 3 nos. 5A switches, 1 No. 5A socket, JB type SW2. (iii)Type SWB3 - 5 nos. 5A switches, 1 No. 5 A Socket, 1 No. fan regulator space provision, JB type SW3. (iv) Type SWB4 - 7 nos. 5A switches, 1 No. 5A Socket, 3 nos. fan regulator space provision, JB type SW4. (v) Type SWB5 - 5 nos. 5A switches, 1 No. 5 A Socket, JB type SW5. (shall have the provision for mounting 16A contactor) JB-SW1/2/3/4/5 Provided with stud type terminals including spare terminal, each terminal suitable for terminating upto two nos. of 1.5 mm2 copper wires.
3.8	**Flexible conduit**		
a	Type		Flexible conduit shall be water proof, rust proof, made of heat resistant steel with temperature rating of 150 deg C.
b	Size	mm	20 mm dia
c	Standard length	M	25 to 50 M
3.9	**Cable Glands**		By vendor for all incoming and outgoing cables/wires
a	Type		Double compression
b	Material		Brass
c	Nickel Plating provided		YES
d	Flameproof glands with flameproof equipment		YES

3.10	**Cable Lugs**		By vendor for all incoming and outgoing cables/wires
a	Type		Crimping type/ ring type
b	Material		Tinned copper
3.11	**LADDERS**		
a	Type		**Both Free standing (Height 3M) and Portable type (Height 3M)**
b	Material		Aluminium
c	Duty		Medium
d	Surface treatment		Galvanized
3.12	**CEILING FAN**		
a	Type		Copper wound single phase motor, aerodynamically designed well balanced Aluminium blades (3 nos.), down rod, die cast Aluminium housing, capacitor, suspension hook, canopies etc.
b	Finishing		Finished in stove enamelled white or with electro static powder coating
c	Power factor		min. 0.9 (except for hazardous and flameproof areas)
d	Voltage		240V +/- 10%, 50Hz, AC
e	Insulation		Class 'E' or better
f	Sweep		1200MM sweep with Stepped electronic regulator
g	Efficiency class		BEE-5 star rating
3.13	**24V AC Supply system (for LP-(3) - LP OUT DOOR TYPE LP-E(24), 24V SOCKET & 24V portable lamp)**		
a	Panel enclosure		2 mm (min) for MS sheet & hot dip galvanized / 2.5 mm (min) for die cast aluminium alloy / 2 mm (min) for CRCA sheet steel with electrostatic power coating
b	Transformer type		Dry type two winding, 3 phase transformer
c	Transformer rating		3kVA
d	Transformer voltage ratio		415/ 24 Volt
e	Cooling		Natural air cooled
f	Insulation		class F insulation or better, with temperature rise limited to class B
g	Impedance		5%
h	Tap changer		Off-circuit tap changer with +/- 5% in steps of +/- 1.25% tapping

i	Application areas		**<u>Boiler area</u>: Near inspection manholes on boiler platforms and boiler drum** **<u>TG Building</u>: Near HP & LP Heaters, turbine flash tank, blow down tank, near condenser water box, near generator and near bus duct termination of generator end.** **<u>ESP area:</u> Near inspection manholes.** **<u>Other area:</u> Near Deaerator**
j	Module type:		**Fixed type**
k	Incomer side:		40A TPN MCB
l	Outgoing feeder:		16A SPN MCB
m	Lamp wattage		**40W (LED/Halogen)**
n	Cable size (to be provided with portable module)		1.5 sq. mm. PVC insulated
o	Cable length (to be provided with portable module)		15 meter
p	Material of busbar		Tinned copper
q	Internal wiring		Min. 1.5 sq. mm. FRLS copper wire/cable
3.14	**STRIP LED (for cove lighting)**		
a	Type		Each strip shall be min. 5 meters in length
b	Connection Hardware		Adaptor for connection to the power supply to be provided. Inter-strip connectors to be provided. The above can be part of the strip itself.
3.15	**24V AC Supply system with 500VA trf (portable type)**		
	Module type		Portable type
	Transformer rating		500 VA
	Transformer voltage ratio		240 / 24 Volt
	Primary side isolation		DP MCB of rating 16A
	Secondary side isolation		DP MCB of rating 6A
4.0	**PERFORMANCE PARAMETERS**		
4.1	Vendor shall ensure satisfactory performance for lighting system designed by them at site. In the event of non satisfactory performance i.e. if the desired lux levels are not demonstrated at site, bidder shall supply (free supply without any cost to BHEL) additional lighting fixtures to achieve the desired lux levels as per specification requirement		
5.0	**INSPECTION/TESTING**		
5.1	As per standard Quality Plan (0000-999-QOE-S-062) (enclosed with technical specification) for Lighting Fixtures		
5.2	All acceptance and routine tests as per the specification and relevant standards shall be carried out. Charges for these shall be deemed to be included in the equipment price. Selection of samples for type test, acceptance test & routine test and acceptance criteria for all the items shall be as per relevant IS.		
5.3	Additionally, following testing methodology shall be followed for flexible conduit.		
Sl. No.	Test Method	Description	Acceptance criteria

1.0	Bending test: After bending in 300mm dia. circle by sufficient length, the sample should return to straight position.	Flexible Steel Conduit	No change in ID/OD to be observed
2.0	IP 54 as per IS/ IEC 60529: 2001 or Conduit to be bent in U shape and filled with water for 2min minimum	Waterproof	No Leakage of water to be observed
3.0	A sample of 1 Mtr length to be kept in a salt spray chamber continuously for 72hrs	Rust Proof	No rusting to be observed
4.0	Conduit to be placed in Oven with minimum temperature of 150 deg C for a period of 15 min.	Temperature Rating of 150 Deg C	No damage to be observed
notes-	A.The above test procedure is suggestive only, however manufacturer standard proven practice shall also be acceptable subject to customer approval of same. B.Manufacturer report for the same shall be submitted along with submission of data sheet during detailed engineering.		
5.2	**TYPE TEST**		
5.2.1	The vendor shall carry out the type tests as listed in this specification on the following types of LED fixtures to be supplied under this contract. LED fixtures (Type test shall be conducted on one rating each of following type of LED fixtures. Rating for test conduction shall be decided by the owner during detailed engineering) a) High bay fixture. b) Well glass fixture. c) Street light fixture d) Surface mounted type fixture. e) Recessed mounted type fixture.		

5.2.2	Type test reports of the following items as per technical specification requirements/ standards shall be submitted for approval. i) Lighting fixtures of each type ii) Lighting panel of each type (Degree of Protection) iii) Junction Box of each type iv) LDB , LP & lighting transformer as per relevant standards Type test reports for LED as per standards for following shall be submitted for approval. 1. Visual and Dimension check 2. Proof of procurement of LEDs 3. Safety tests a) Marking b) Construction c) Provision for Earthing d) External and Internal wiring e) Protection against electrical shock f) Endurance and Thermal g) Insulation resistance & electrical strength h) Resistance to heat fire & tracking i) Resistance to Humidity 4. Fire Retardant test 5. Performance tests (electrical, Photometric color and Life) 6. Burn-in Test 7. Power Cycling 8. Temperature rise test 9. Emission Tests a) Radiated & conducted emission b) Harmonics & flickers 10. Immunity tests
5.2.3	In addition, following test reports to be submitted for LED chip/LED luminaire: a) LED parameters like Lumen per watt, CRI, Beam angle from manufacturer b) LM 80/IS: 16105 report. c) LM 79/IS: 16106 report.
5.2.4	The type tests shall be carried out in presence of the employer's representative, for which minimum 15 days' notice shall be given by the contractor. The contractor shall obtain the employer's approval for the type test procedure before conducting the type test. The type test procedure shall clearly specify the test set–up, instruments to be used, procedure, acceptance norms, recording of different parameters, interval of recording, precautions to be taken etc. for the type test(s) to be carried out.
5.2.5	In case the contractor has conducted such specified type test(s) on or after 14.11.2014 , he may submit during detailed engineering the type test reports to the owner for waival of conductance of such type test(s). These reports should be for the tests conducted on the equipment similar to those proposed to be supplied under this contract and test(s) should have been either conducted at an independent laboratory or should have been witnessed by a client. The owner reserves the right to waive conducting of any or all the specified type test(s) under this contract.

5.2.6	For items for which only type test reports are to be submitted as per cl. No. 5.2.2 & 5.2.3 above , these reports should be for the test conducted on the equipment similar to those proposed to be supplied under this contract and the test(s) should have been either conducted at an independent laboratory or should have been witnessed by a client and should have been carried out on or after 14.11.2014. However, if the contractor is not able to submit report of the type test(s) conducted on or after 14.11.2014, or in case of type test report(s) are not found to be meeting the specification requirements, the contractor shall conduct all such tests under this contract at no additional cost to the owner either at third party lab or in presence of client /owners representative and submit the reports for approval.		
5.2.7	Junction boxes, switch boxes, receptacle enclosure etc. shall be subjected to physical and dimensional checks also. Switch boxes shall be made of 1.6 mm thick MS sheet with 3 mm thick decorative, Perspex cover. Switch box shall be hot dip galvanized.		
6.0	**SYSTEM DESIGN/ SYSTEM PARAMETERS**		
6.1	**LIGHTING DISTRIBUTION BOARDS**		
6.1.1	Operational Front		Single Front
6.1.2	Type of execution of modules (functional unit)		Fixed type
6.1.3	Type of sheet steel		CRCA
6.1.4	Sheet metal thickness (minimum)		
a)	Non-load bearing covers	mm	1.6 mm
b)	Non-load bearing partitions	mm	1.6 mm
c)	Load bearing members	mm	2 mm
d)	Frames	mm	2 mm
e)	Door	mm	1.6 mm
f)	Withdrawable unit (if applicable)	mm	N.A.
6.1.5	Cable alley width (minimum)	mm	350, Design shall be as per form IV-B
6.1.6	Bus bar material (Busbar shall be PVC Sleeve insulated(UL224) CE/UL certified)		Aluminium grade E 91E / High Conductivity Copper (ETC)
6.1.7	Earth bus bar material		GI Strip
6.1.8	Degree of Protection		
a)	Main Panel		IP-54 for Indoor
b)	Transformer cubicle		IP-42
6.1.9	Gland plate thickness	mm	3
	Terminals shall be suitable for terminating incoming and outgoing cables (sizes shall be finalized during detailed engineering.		
6.1.10	**AC LDB**		
a)	No. of Incomers		[√] One [√] Two (Refer BOQ for details)
b)	Bus coupler required (for two incomers)		[√] Yes [ ] No
c)	Incomer and Bus coupler rating	A	As per transformer rating
d)	MCCB required both at primary & secondary of transformer		[√] Yes [ ] No
d)	Type of Incomer and Bus coupler		[ ] TPN SFU [√] TPN MCCB
e)	Type of Outgoing Feeders		[ ] TPN SFU [√] TPN MCCB
f)	Outgoing feeders rating	A	63
g)	Cable entry		[√] Bottom [ ] Top

			Cable termination in the cable alley of LDB shall confirm to Form IVb design.
6.1.11	**AC WDB**		
a)	No. of Incomers		[√] One [ ] Two (Refer BOQ for details)
b)	Bus coupler required		[ ] Yes [√] No
c)	Incomer and Bus coupler rating	A	As per transformer rating
d)	MCCB required both at primary & secondary of transformer		[√] Yes [ ] No
d)	Type of Incomer and Bus coupler		[ ] TPN SFU [√] TPN MCCB
e)	Type of Outgoing Feeders		[ ] TPN SFU [√] TPN MCCB
f)	Outgoing feeders rating	A	63
g)	Cable entry		[√] Bottom [ ] Top
			Cable termination in the cable alley of WDB shall confirm to Form IVb design.
6.1.12	Lighting/Welding Transformer		
a)	Rating	kVA	50/100 (for Welding transformer 100 KVA)
b)	Type of cooling		Air natural
c)	Voltage ratio	V	415/415
d)	Rated frequency	Hz	50
e)	No. of phases		3
f)	Vector group		Dyn11
g)	Off circuit taps		
	Tap range, steps	%	+5% to -5% in steps of 2.5%
	Voltage of each tap	V	As per manufacturer's data
h)	Impedance at rated current, frequency at 75°C	%	100kVA – 4% 50kVA – 3%
i)	Rated current		
	Primary	A	As per manufacturer's data
	Secondary	A	As per manufacturer's data
j)	Transformer type		[ ] Cast resin [ ] Encapsulated [√] Non-Encapsulated
k)	Transformer winding insulation		Class-B or better
l)	Transformer winding insulation temperature rise limit		80° C above 50° C ambient
n)	Type of ventilation arrangement provided for transformer enclosure		As per manufacturer's data
o)	Winding conductor material		Copper
p)	Iron loss at 50 Hz and 100% rated voltage	kW	As per manufacturer's data
q)	Copper loss at rated load at 75°C	kW	As per manufacturer's data
r)	Regulation at full load at 75°C and 0.8 p.f. lagging		As per manufacturer's data
s)	Weight	kg	As per manufacturer's data

6.1.13	**DC LDB**		
a)	No. of Incomers		[√] One [ ] Two
b)	Bus coupler required		[ ] Yes [√] No
c)	Incomer and Bus coupler rating	A	125
d)	Type of Incomer and Bus coupler		[√] DP SFU WITH CONTACTOR [ ] DP MCCB
e)	Type of Outgoing Feeders		[√] DP SFU [ ] MCCB
f)	Outgoing Feeders rating	A	32
g)	Changeover required in DC LDB		[ ] Yes [√] No
			Normally all DC luminaries shall be 'OFF'. Upon failiure of AC supply, DC luminaries shall be automatically switched 'ON'. On restoration of AC Emergency lighting through DG, DC luminaries shall be put-off automatically after a time gap of about three minutes following the restoration of lighting to ACN or ACE lighting system.
h)	Under voltage relay required		[√] Yes [ ] No
6.2	**LIGHTING PANELS**		
a)	Application		[ ] Indoor [ ] Outdoor [√] Both
b)	Type of sheet steel		CRCA
c)	Sheet metal thickness (minimum)		2
d)	Degree of Protection		
i)	Indoor panel		IP-55
ii)	Outdoor panel		IP-55 (IPW-55) with Canopy
iii)	Canopy in outdoor panel		[√] Yes [ ] No
e)	Bus bar material		[√] Aluminium [ ] Copper
f)	Earth bus bar required		[√] Yes [ ] No
g)	Earth bus bar material (if applicable)		[√] GI Strip [ ] Aluminium
h)			[ ] Copper
i)	Gland Plate	mm	3
j)	Earthing studs required		[√] Yes [ ] No
k)	Hinged door with locking facility		[√] Yes [ ] No
	Terminals shall be suitable for terminating incoming and outgoing cables (sizes shall be finalized during detailed engineering		
6.2.1	**AC Lighting Panel**		
a)	Incomer rating	A	63 FOR AC LP AND FOR SLP
b)	Type of Incomer		[ ] TPN SFU [√]TPN MCB
c)	Type of Outgoing Feeders (non-flameproof panel)		[√] SPN MCB [ ] TPN MCB (With Individual neutral for each MCB)
d)	Type of Outgoing Feeders (Flameproof panel)		Not Applicable

e)	Type of Outgoing Feeders (Street Light panel)		[ ] SPN MCB [√] TPN MCB
f)	Timer required for indoor panel		[√] Yes (For 12 o/g and 18 o/g)-30% circuits provided with Timer for perepheral lighting, There shall be option to bypass the timer circuit in each outgoing circuit [ ] No
g)	Timer required for outdoor panel		[√] Yes [ ] No
h)	Timer required Street Light panel/ High mast feeder pillar		[√] Yes [ ] No
i)	Photocell required for Street Light panel/ High mast feeder pillar		[] Yes [√] No
j)	Outgoing feeders rating	A	20
k)	ELCB in Incomer		[√] Yes (for outdoor area LP's) [ ] No
6.2.2	**DC Lighting Panel**		
a)	Incomer rating	A	32
b)	Type of Incomer		[√] DP SFU [ ] DP MCCB
c)	Type of Outgoing Feeders (non-flameproof panel)		[√] DP MCB [ ] DP MCCB
d)	Type of Outgoing Feeders (Flameproof panel)		Not Applicable
e)	Outgoing feeders rating	A	16
6.3	**COMPONENTS OF LIGHTING SYSTEM EQUIPMENT**		
6.3.1	**Moulded Case Circuit Breaker (MCCB)**		
a)	Rated voltage	V	415
b)	Number of poles		TPN
c)	Rated short circuit duty	kA	50
d)	Rated breaking capacity (rms)	kA	50
e)	Rated making current (peak)	kA	105
f)	Release with short circuit		[√] Yes [ ] No
g)	Release with overload		[√] Yes [ ] No
h)	Release with under voltage		[ ] Yes [√] No
i)	Auxiliary contacts		
	Numbers	NO+NC	2NO + 2NC
	Rating	A	As per manufacturer data
j)	Rated insulation level	V	690
k)	Utilization category		A
6.3.2	**Switch-Fuse Unit**		
a)	Utilisation category for main contacts		AC23
6.3.3	**Miniature Circuit Breaker**		
a)	SPN MCB rating (min)	A	20
b)	DP MCB rating (min)	A	16
c)	TPN MCB rating (min)	A	63
d)	Short time rating	kA	9
e)	Magnetic short circuit protection required		[√] Yes [ ] No
f)	Thermal overload protection required		[√] Yes [ ] No
g)	Characteristic curve		C or better

6.3.4	**Current Transformer**		
a)	Type		Cast resin
b)	Secondary current rating	A	[√] 1 [ ] 5
c)	Burden	VA	10
d)	Accuracy class		1
e)	Instrument Safety Factor		<5
6.3.5	**Voltage Transformer (if required)**		
a)	Type		Cast resin
b)	Secondary terminal voltage (phase-phase)	V	110 V
c)	Burden	VA	10
d)	Accuracy class		1
e)	Winding configuration		Star/ Star
f)	System grounding		[√] Effective [ ] Non-effective
6.3.6	**Indicating Meters**		
6.3.6.1	**Ammeter**		
a)	Type		Analog
b)	Shape		Square
c)	Size		96mm x 96mm
d)	Accuracy		2
e)	Current coil rating	A	1
f)	Angle of deflection	deg	90
6.3.6.2	**Voltmeter**		
a)	Type		Analog
b)	Shape		Square
c)	Size		96mm x 96mm
d)	Accuracy		2
e)	AC voltage coil rating	V	0-500
f)	DC voltage coil rating	V	0-250
g)	Angle of deflection	deg	90
6.3.6.3	**Energy meter (if applicable)**		
a)	Type		[√] Analog [ ] Digital
b)	Accuracy		1
c)	Current coil rating	A	1
d)	Voltage coil rating	V	0-500
6.3.7	**Power Contactors**		
a)	Coil voltage (nominal)		
	AC contactors :	V	240
	DC contactors	V	220
b)	Current rating of contacts		
	Power	A	As per manufacturer data
	Control	A	As per manufacturer data
6.3.8	**Under voltage relay**		
a)	Type		[√] Electromagnetic [ ] Static
b)	Coil voltage rating	V	240
c)	Means for in-built testing provided		As per manufacturer data
6.3.9	**Timer**		
6.3.9.1	**Time switch (Programmable Digital Timer)**		

a)	Type		Electronic Astronomical Almanac Time switch
b)	Battery Backup	Years	Min. Ten Years
c)	Display		4 Digit LED Display
d)	Range	hr	0-24
e)	Coil voltage rating	V	240
f)	Output		10 Amp 3 relay output
6.3.9.2	**Timer for AC-DC changeover**		
a)	No. of contacts		
	ON time delay	NO+NC	As per scheme requirement
	OFF time delay	NO+NC	As per scheme requirement
	Instantaneous	NO+NC	As per scheme requirement
b)	Coil voltage rating		
	AC timer	V	240
	DC timer	V	220
c)	Time delay range		
	AC timer	sec	0-5
	DC timer	Sec	0-180
6.3.10	**Selector switch**		
a)	Type of selector switch		[√] Stay put [ ] Wing knob
b)	Lockable		[ ] Yes [√] No
6.3.11	**Push Button**		
a)	Voltage grade	V	500
b)	Potential free contacts		2NO+2NC
6.3.12	**Indicating Lamps**		LED Type
a)	Lens Colour		
	ON condition		Red
	OFF condition		Green
b)	Circuit voltage	V	240V
6.3.13	**Cable Glands**		**By vendor for all incoming and outgoing cables (Cable Sizes shall be informed during detailed engineering)**
a)	Type		[√] Double compression [ ] Single compression
b)	Material		Brass
c)	Nickel Plating provided		[√] Yes [ ] No
d)	Flameproof glands with flameproof equipment		[√] Yes [ ] No
6.3.14	**Cable Lugs**		**By vendor for all incoming and outgoing cables (Cable Sizes shall be informed during detailed engineering)**
a)	Type		Crimping type
b)	Material		Tinned copper
8.0	**INSPECTION/TESTING**		
8.1	As per standard Quality Plan, 0000-999-QOE-S-034 (part of specification)		
8.2	All the components and completely assembled equipment shall be tested as per the latest edition of standards. Charges for these tests shall be deemed to be included in equipment price.		

8.3	All the specified type and routine tests shall be carried out to verify the rating and performance of the equipment. Where valid type test certificates in evidence of equipment performance claimed are available & approved by purchaser, the requirements for conducting type tests may be waived. The general arrangement of object under test shall be to purchaser's approval.		
8.4	Functional testing shall be carried out for Lighting/Welding Distribution Boards/ Lighting Panels.		
8.5	All manufacturing processes viz. machining, sheet forming, electro-plating, wire routing, cleating & crimping, assembly, surface preparation shall conform to good manufacturing practices.		
8.6	Inspection for dimensional & visual checks especially of the fol-lowing, with respect to contract drawings, documents & standards shall be conducted:		
8.7	a) General sturdiness & rigidity of equipment. b) Surface finishing. c) Gasketting. d) Inter-changeability. e) Constructional features viz. location, accessibility & marking of components, segregation, accessibility to live parts (shrouding) etc. f) Completeness of scope.		
8.8	Safety interlocking verification shall be done.		
8.9	Each lighting transformer shall be routine tested and one transformer of each rating shall be type tested in accordance with relevant standard in case type test certificates of similar transformers are not available / not acceptable to the purchaser.		
8.10	Equipment shall be liable for rejection if tolerances on the values of dimensions, power consumption, impedances, temperature rise etc. exceed the specified values by purchaser and / or standards.		
9.0	**Lighting Poles**		Hot dip galvanized Octagonal pole
9.1	Type of Pole		
a	Octagonal Pole Type PS-1		9 m
b	Octagonal Pole Type PS-2		11 m
c	Octagonal Pole Type PF-1		9 m
d	Octagonal Pole Type PF-2		11 m
9.2	Material		HT Steel Conforming to grade S355JO (for Octogonal Pole)
9.3	Tensile Strength	MPa	490-630 N/mm2
9.4	Mounting arrangement		[ ] PCC foundation [√] Base plate
9.5	Grade of concrete		[ ] M20 [ ] M25 [√] M30
9.6	Surface Treatment		[ ] Painted [√] Galvanized
9.7	The general dimensions of pole are mentioned below:		

Sl no.	Height (meter)	Top Dia A/F (mm) Min.	Bottom Dia A/F (mm) Min.	Sheet thickness (mm) min.	Base plate dim. (LxBxT) mm. min	Foundation bolt				Anchor plat thickness (mm) min.
						Bolt size (no. x dia.) (mm) min.	PCD (mm)	Bolt length (mm)	Projected Bolt length (mm)	
1	9	70	155	3	260x260x16	4x24	250	750	125	3
2	11	90	210	4	300x300x20	4x24	300	850	125	4

These dimension are subjected to tolerances as per IS-2102 except for bending radius.

9.10	**GALVANISATION details for poles**		
a	Process		Hot dip
b	Min weight of zinc coating	gm/m2	460
c	Avg. thickness of zinc coating	Microns	70
9.11	**Street Light Junction Box (Integral to pole)**		Terminals for loopin & loopout shall be provided for suitable cable size.
9.12	**Cable Glands**		**By vendor for all incoming and outgoing cables at Pole JB**
a	Type		[v] Double compression [ ] Single compression
b	Material		Brass
c	Nickel Plating provided		[v] Yes [ ] No
d	Size		Cable Gland shall be suitable for cable size : 3.5C-25sqmm
9.13	**Cable Lugs**		**By vendor for all incoming and outgoing cables at Pole JB**
a	Type		[v] Crimping type [ ] Ring type
b	Material		Tinned copper
c	Size		Suitable for Cable sizes: 3.5C-25sqmm armoured cable.
9.14	**WIND SPEED DATA**		As per IS-875 latest revision & amendments. (Wind speed : 44 meters/sec)
9.15	**SOIL BEARING CAPACITY**		7 T/m^2
9.16	**Category of terrain**		Category 2

TECHNICAL DATA - PART - B (SUPPLIER DATA TO BE FURNISHED ALONG WITH THE OFFER)

S. No.	DESCRIPTION	LUMINAIRE MAKE AND MODEL	MEASURED ELECTRICAL INPUT POWER	TOTAL LUMINOUS FLUX (LUMEN) OF LUMINAIRE -
	MAIN SUPPLY ITEMS		**(W)MAX. VALUE**	**(LUMEN) MIN. VALUE**
		The luminaire efficacy shall be not less than 100 Lm/W.		
1	**Lighting Luminaires**			
1.1	Luminaire Type LED FC06 (LED)			
1.2	Luminaire Type LED FC07 (LED) - DC			
1.3	Luminaire Type LED FC30 (LED)			
1.4	Luminaire Type LED FC33 (LED) - DC			
1.5	Luminaire Type LED FC34 (LED) - DC			
1.6	Luminaire Type LED FC81 (LED)			
1.7	Luminaire Type LED SB11 (LED)			
1.8	Luminaire Type LED SB02 (LED)			
1.9	Luminaire Type LED SB03 (LED)			
1.10	Luminaire Type LED SF63 (LED)			
1.11	Luminaire Type LED SF64 (LED)			
1.12	Luminaire Type LED SS62 (LED)			
1.13	Luminaire Type LED SS63 (LED)			
1.14	Luminaire Type LED SW41 (LED)			
1.15	Luminaire Type LED SW42 (LED)			
1.16	Luminaire Type LED MW96 (LED)			
1.17	LUMINAIRE TYPE DOWNLIGTER 15-18W(LED)			
1.18	LUMINAIRE DIMABLE DOWNLIGTER 15-18W(LED)			
1.19	LUMINAIRES TYPE FC30 (LED-DIMMABLE)			

COMPLIANCE DRAWING

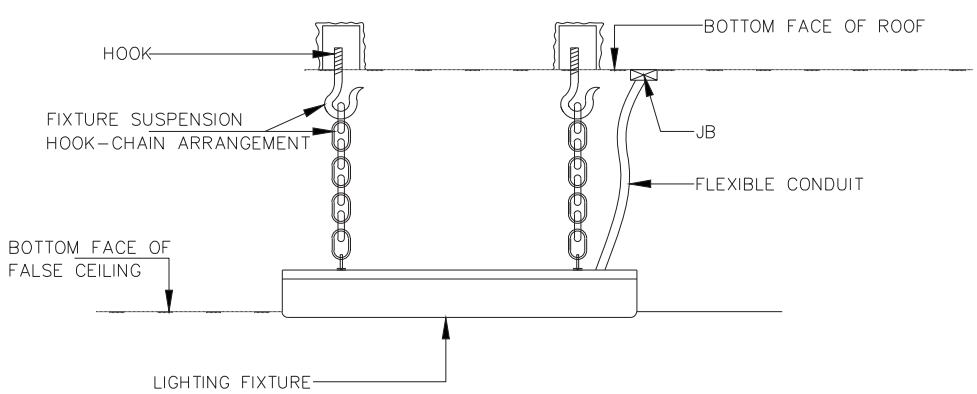

FALSE CEILING AREAS
TYPE-A

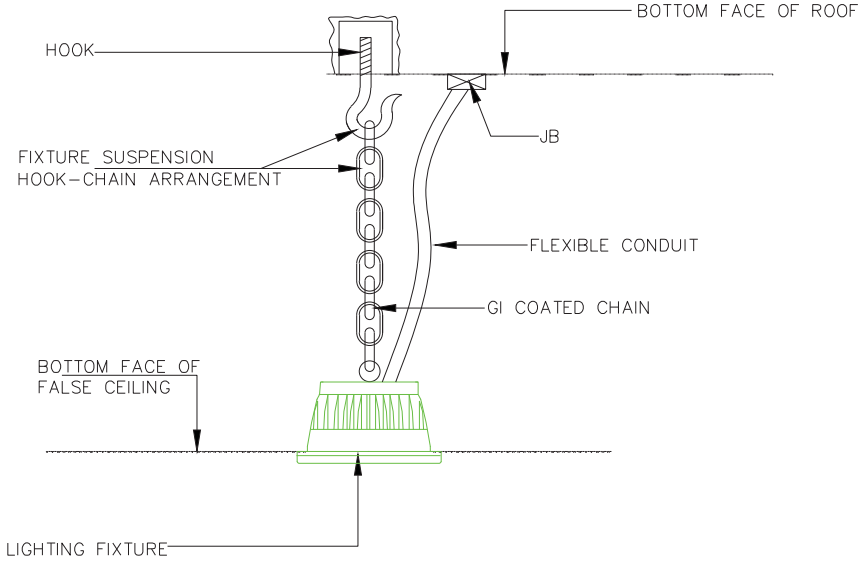

TYPE-A
DOWNLIGHTER

This is aTypical mounting arrangement dwgs/ details for guidance only. Final Mounting arrangment dwg shall be made by the successful bidder during detailed Engineering. It is to be noted that GI Conduit 20mm Dia and Flexible Conduit, Structural Steel shall be provided by BHEL. Balance all other accessories clamps/ chains/ clips/ steel rope/ pins etc required for mounting as per typical mounting arrangement for their fixtures shall be part of fixtures only and shall be provided by the Bidders.

2. In Lighting layout, Mounting arrangement also shown. If any Descrepency found on both documents than Consult with Design incharge/Site Incharge.
3. Quantity and Material shown in drawings are indicative only and may be change or vary as per site requirement.
4. If any new type of mounting required at site than we can optimized or change the arrangement with prior inform to BHEL site incharge.
5. All structural steel parts/supporting parts shall be hot dip galvanized as per BOQ/TS.

SIZE–A4

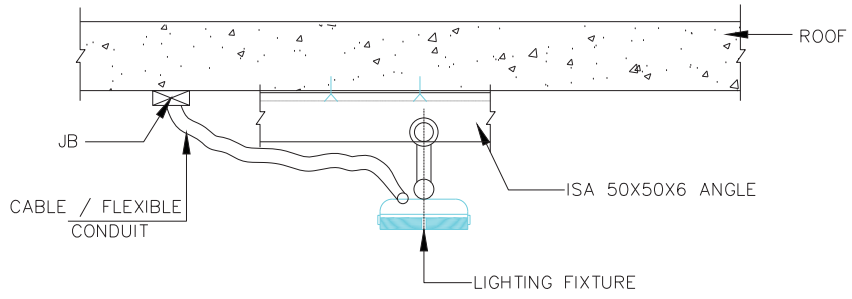

CEILING MOUNTING
TYPE-O

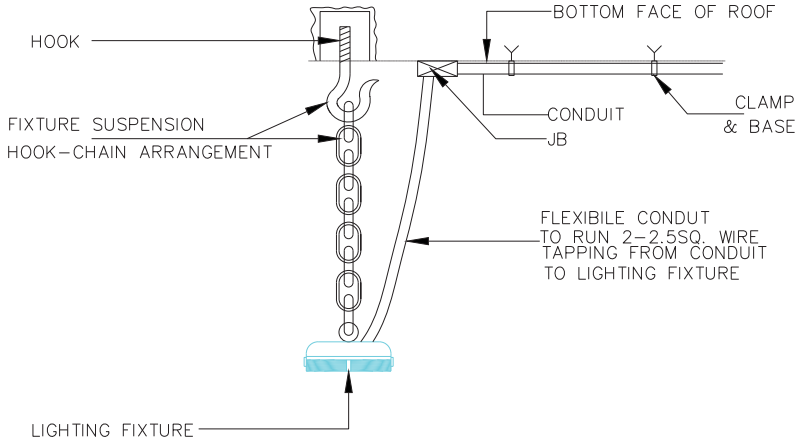

CEILING MOUNTING
TYPE-O

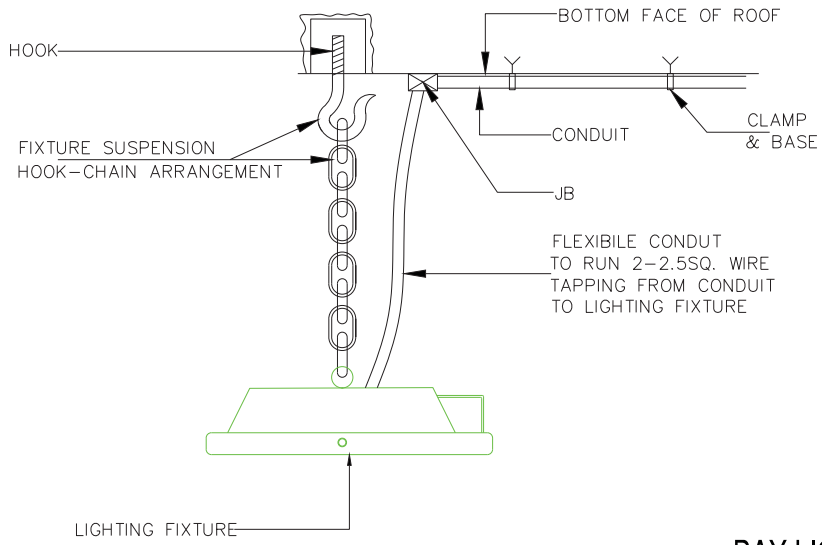

CEILING MOUNTING
TYPE-O

BAY LIGHT

General Notes:

1. Mounting arrangement can be changed/ modified on site as per site requirements.
2. In Lighting layout, Mounting arrangement also shown. If any Descrepency found on both documents than Consult with Design incharge/Site Incharge.
3. Quantity and Material shown in drawings are indicative only and may be change or vary as per site requirement.
4. If any new type of mounting required at site than we can optimized or change the arrangement with prior inform to BHEL site incharge.
5. All structural steel parts/supporting parts shall be hot dip galvanized as per BOQ/TS.

SIZE–A4

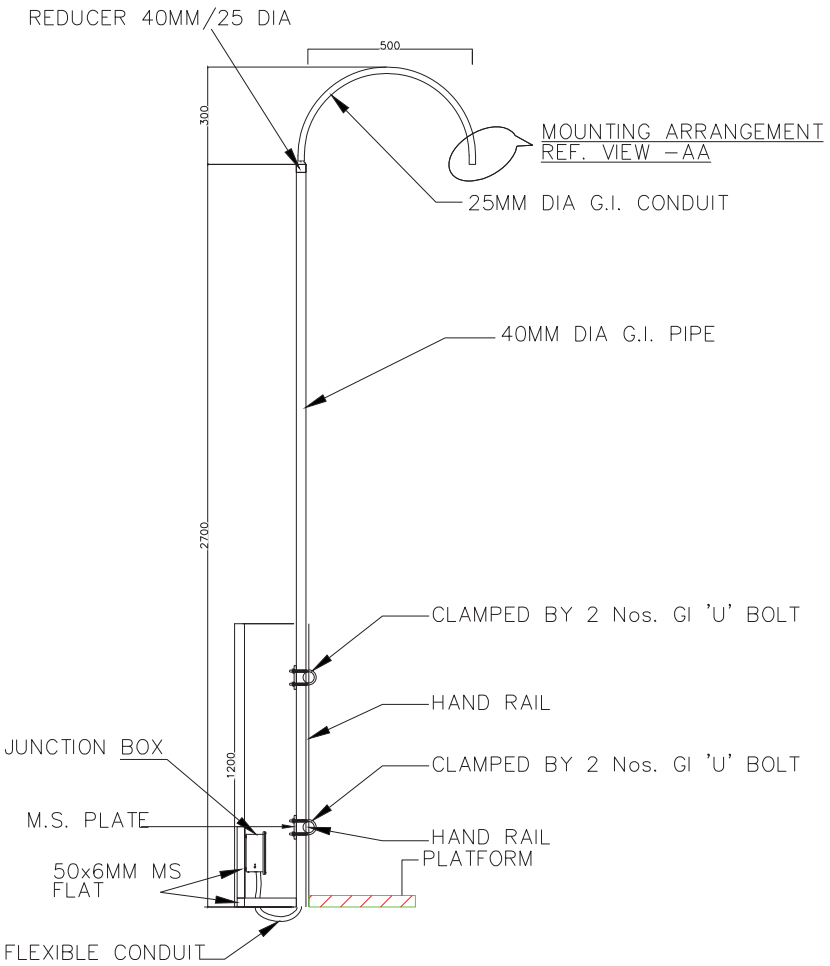

HAND RAIL MOUNTING TYPE-I

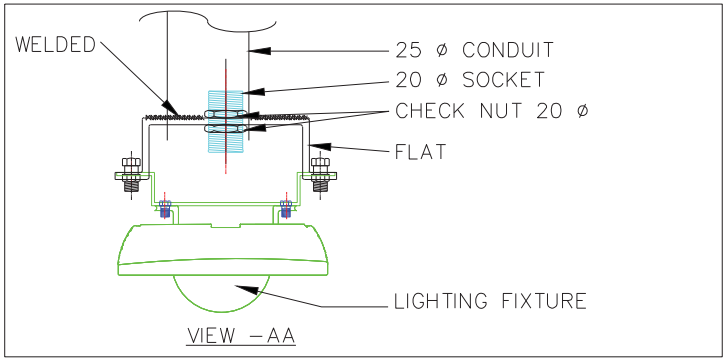

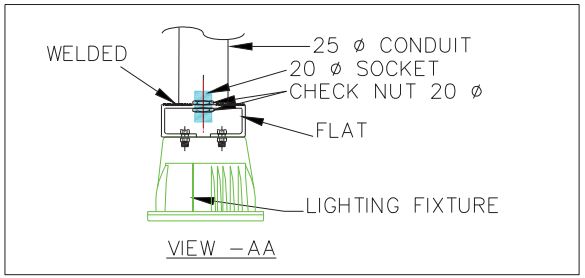

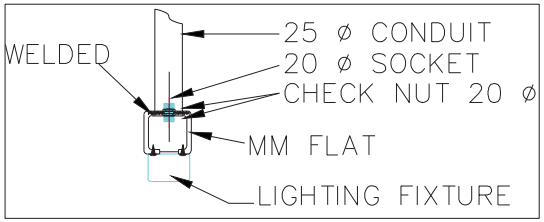

General Notes:

1. Mounting arrangement can be changed/ modified on site as per site requirements.
2. In Lighting layout, Mounting arrangement also shown. If any Descrepency found on both documents than Consult with Design incharge/Site Incharge.
3. Quantity and Material shown in drawings are indicative only and may be change or vary as per site requirement.
4. If any new type of mounting required at site than we can optimized or change the arrangement with prior inform to BHEL site incharge.
5. All structural steel parts/supporting parts shall be hot dip galvanized as per BOQ/TS.

SIZE–A4

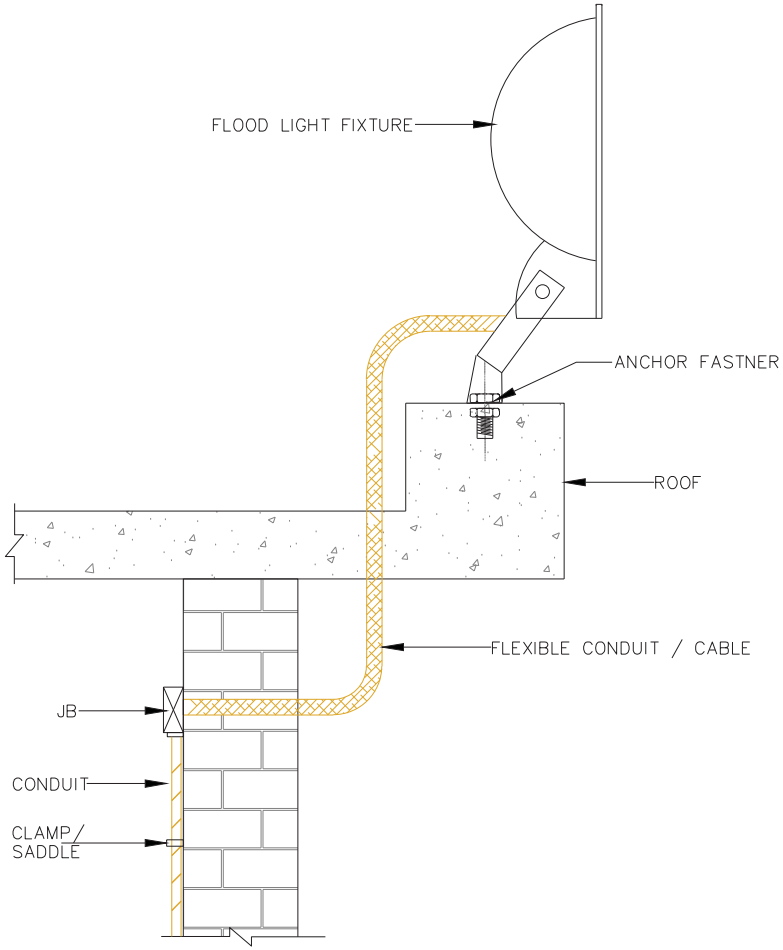

ROOF MOUNTING
TYPE-P

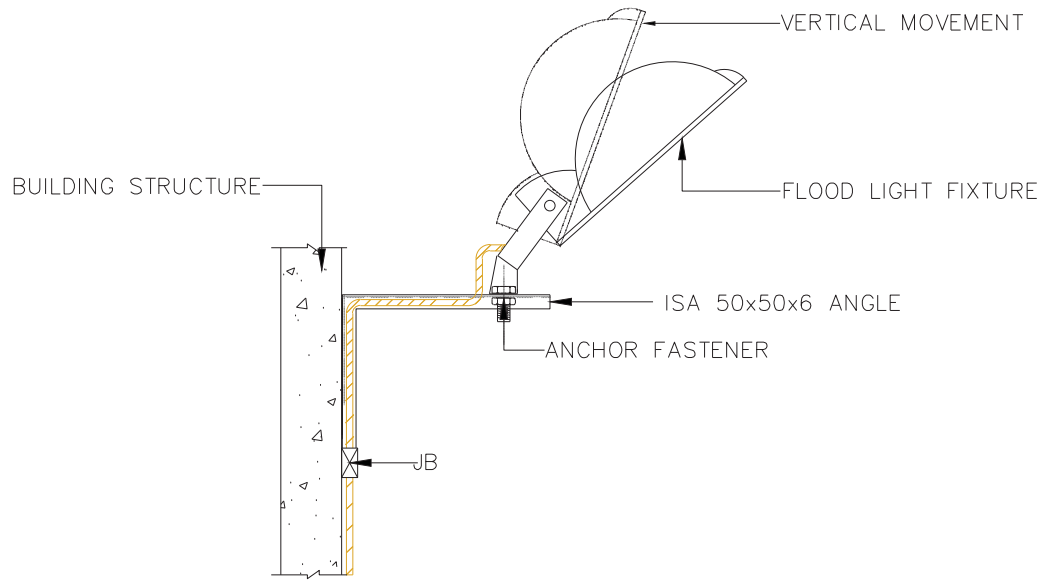

COLUMN MOUNTING
TYPE-Q

General Notes:

1. Mounting arrangement can be changed/ modified on site as per site requirements.
2. In Lighting layout, Mounting arrangement also shown. If any Descrepency found on both documents than Consult with Design incharge/Site Incharge.
3. Quantity and Material shown in drawings are indicative only and may be change or vary as per site requirement.
4. If any new type of mounting required at site than we can optimized or change the arrangement with prior inform to BHEL site incharge.
5. All structural steel parts/supporting parts shall be hot dip galvanized as per BOQ/TS.

SIZE–A4

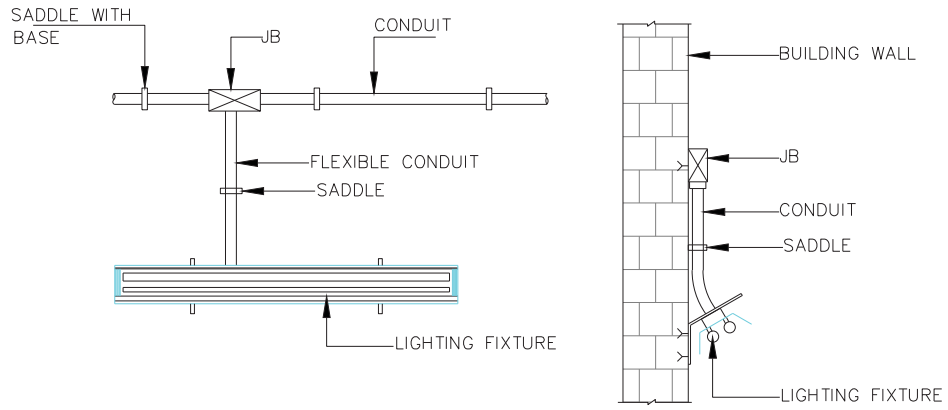

TYPICAL MOUNTING DETAIL OF WALL MOUNTED, TYPE-D

END VIEW

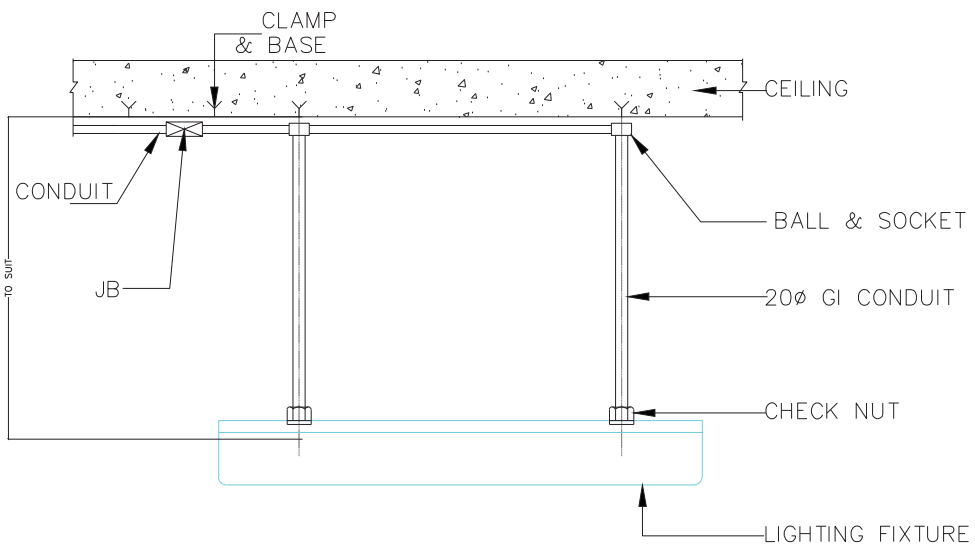

TYPICAL MOUNTING DETAIL OF SUSPANDED, TYPE C

General Notes:

1. Mounting arrangement can be changed/ modified on site as per site requirements.
2. In Lighting layout, Mounting arrangement also shown. If any Descrepency found on both documents than Consult with Design incharge/Site Incharge.
3. Quantity and Material shown in drawings are indicative only and may be change or vary as per site requirement.
4. If any new type of mounting required at site than we can optimized or change the arrangement with prior inform to BHEL site incharge.
5. All structural steel parts/supporting parts shall be hot dip galvanized as per BOQ/TS.

SIZE-A4

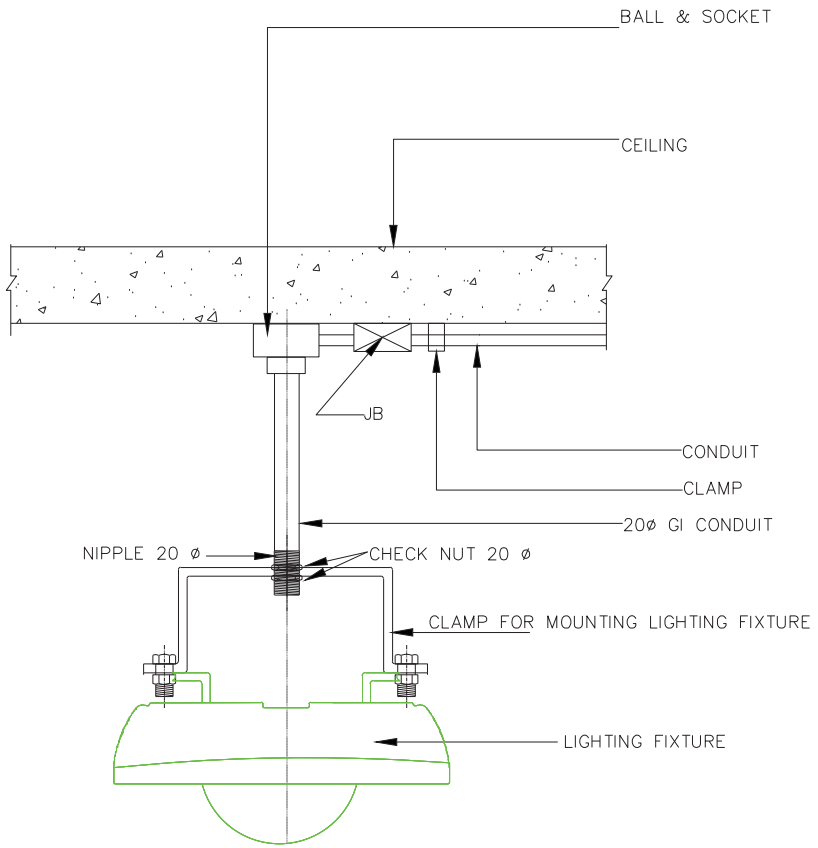

SUPPORTED FROM CEILING
TYPE-F

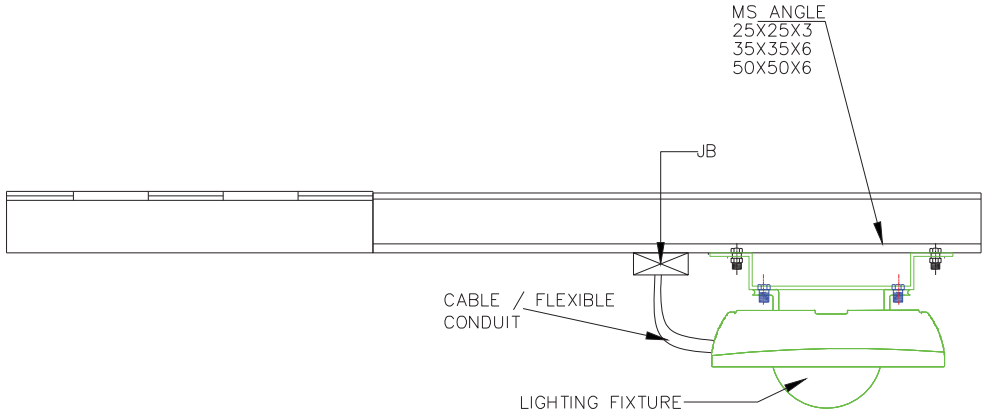

SUPPORTED FROM CHANNEL/
STRUCTURAL STEEL
TYPE-G

General Notes:

1. Mounting arrangement can be changed/ modified on site as per site requirements.
2. In Lighting layout, Mounting arrangement also shown. If any Descrepency found on both documents than Consult with Design incharge/Site Incharge.
3. Quantity and Material shown in drawings are indicative only and may be change or vary as per site requirement.
4. If any new type of mounting required at site than we can optimized or change the arrangement with prior inform to BHEL site incharge.
5. All structural steel parts/supporting parts shall be hot dip galvanized as per BOQ/TS.

SIZE-A4

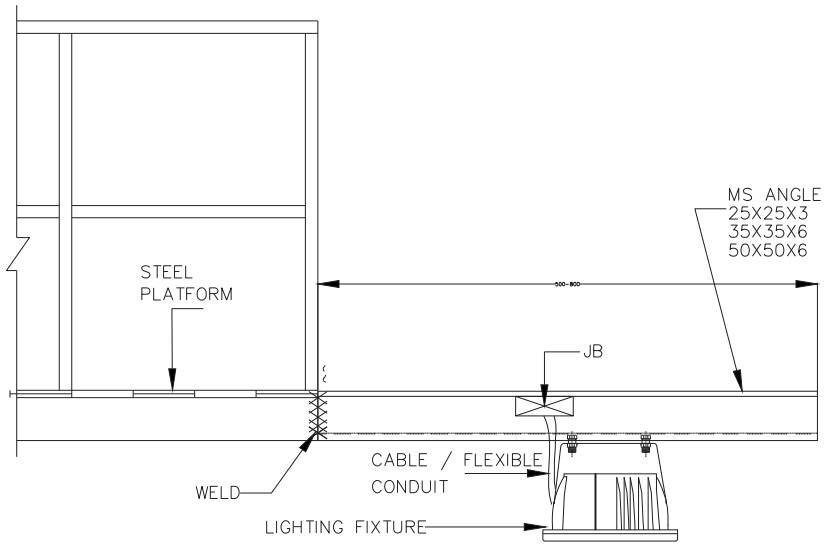

TYPE-G

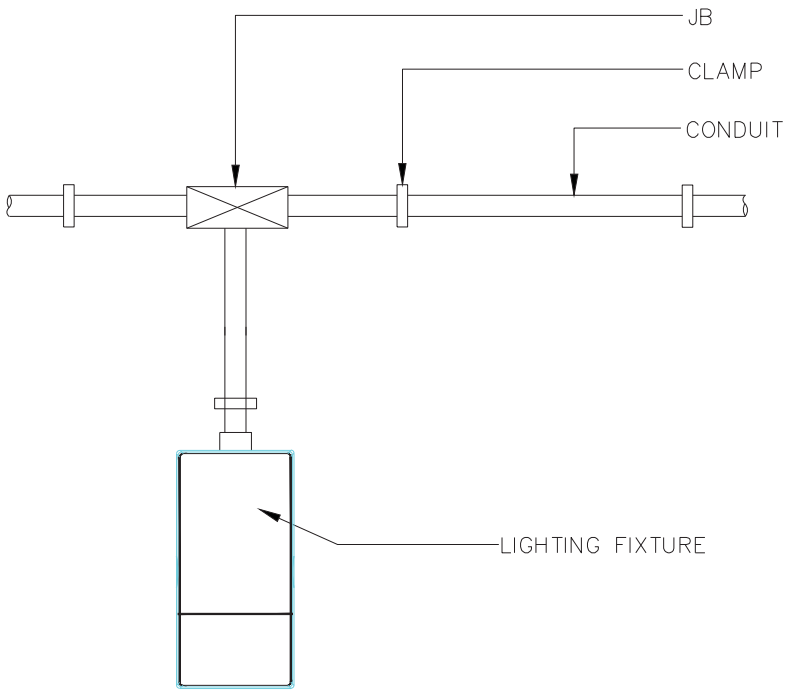

WALL MOUNTING
TYPE-H

General Notes:

1. Mounting arrangement can be changed/ modified on site as per site requirements.
2. In Lighting layout, Mounting arrangement also shown. If any Descrepency found on both documents than Consult with Design incharge/Site Incharge.
3. Quantity and Material shown in drawings are indicative only and may be change or vary as per site requirement.
4. If any new type of mounting required at site than we can optimized or change the arrangement with prior inform to BHEL site incharge.
5. All structural steel parts/supporting parts shall be hot dip galvanized as per BOQ/TS.

SIZE-A4

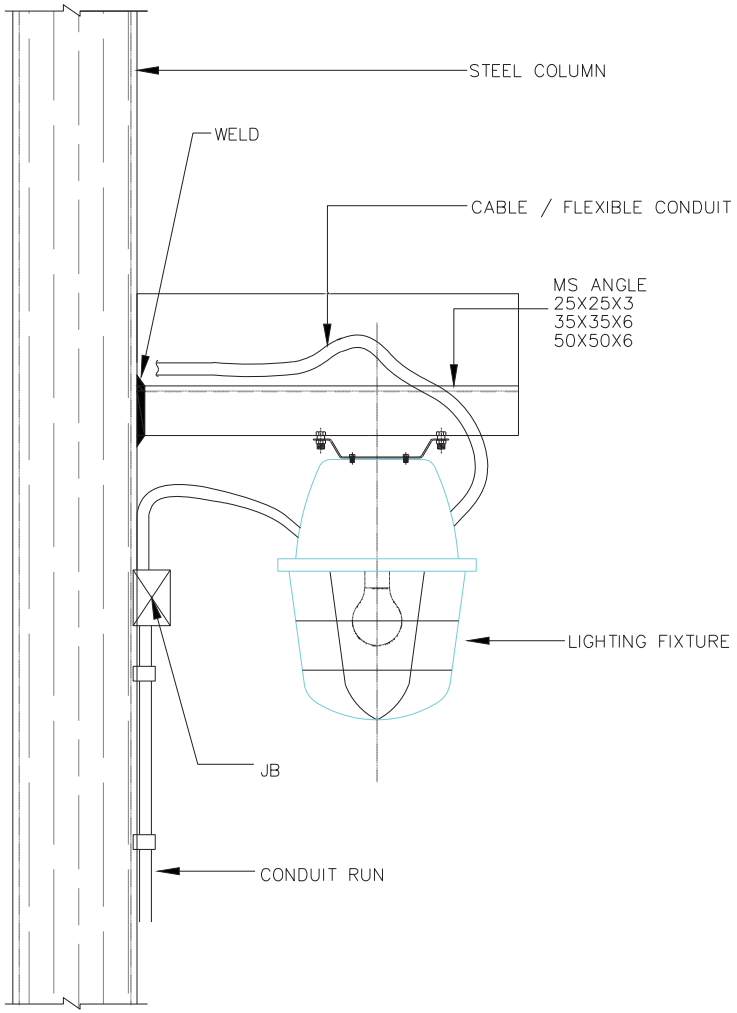

COLUMN MOUNTING
TYPE-M

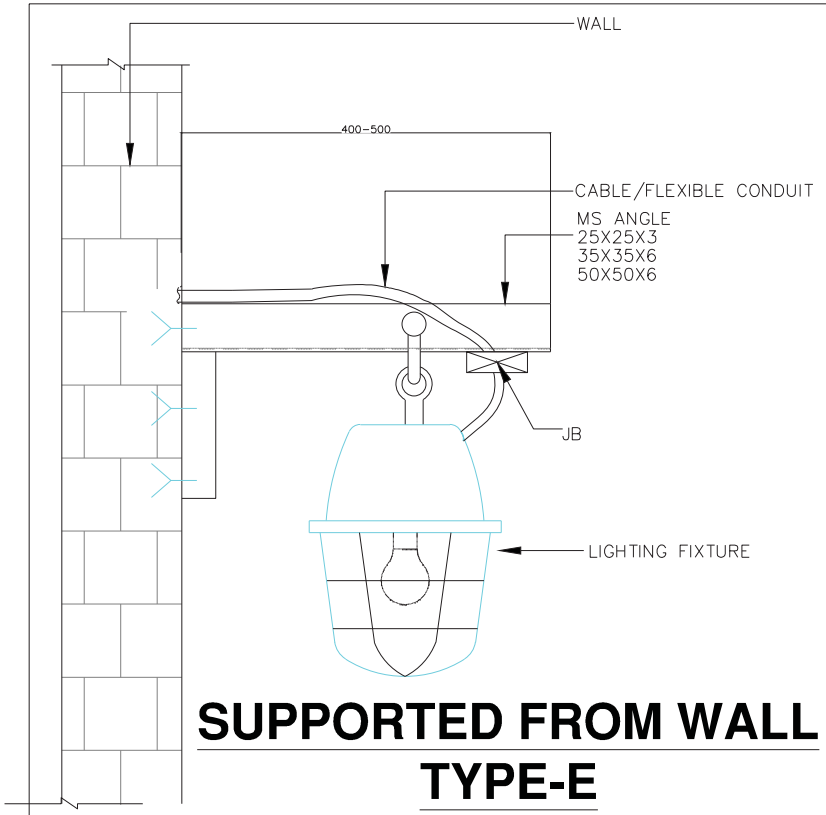

SUPPORTED FROM WALL
TYPE-E

General Notes:

1. Mounting arrangement can be changed/ modified on site as per site requirements.
2. In Lighting layout, Mounting arrangement also shown. If any Descrepency found on both documents than Consult with Design incharge/Site Incharge.
3. Quantity and Material shown in drawings are indicative only and may be change or vary as per site requirement.
4. If any new type of mounting required at site than we can optimized or change the arrangement with prior inform to BHEL site incharge.

5. All structural steel parts/supporting parts shall be hot dip galvanized as per BOQ/TS.

SIZE-A4

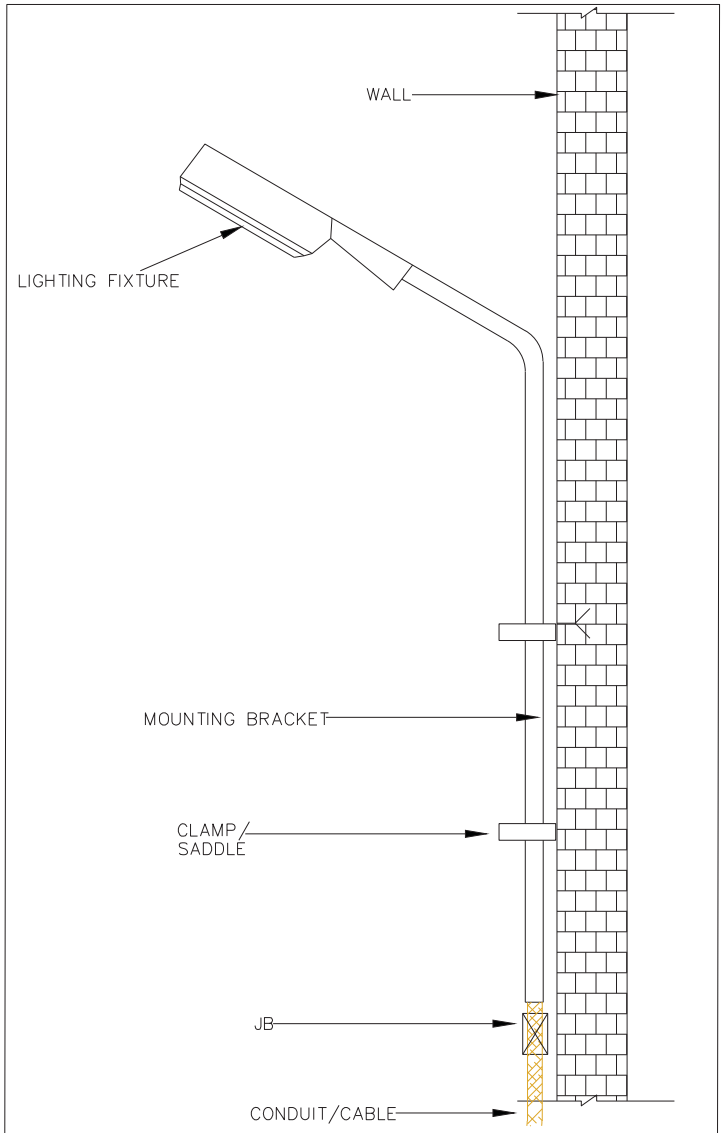

WALL MOUNTING
TYPE-T

General Notes:

1. Mounting arrangement can be changed/ modified on site as per site requirements.
2. In Lighting layout, Mounting arrangement also shown. If any Descrepency found on both documents than Consult with Design incharge/Site Incharge.
3. Quantity and Material shown in drawings are indicative only and may be change or vary as per site requirement.
4. If any new type of mounting required at site than we can optimized or change the arrangement with prior inform to BHEL site incharge.
5. All structural steel parts/supporting parts shall be hot dip galvanized as per BOQ/TS.

SIZE-A4

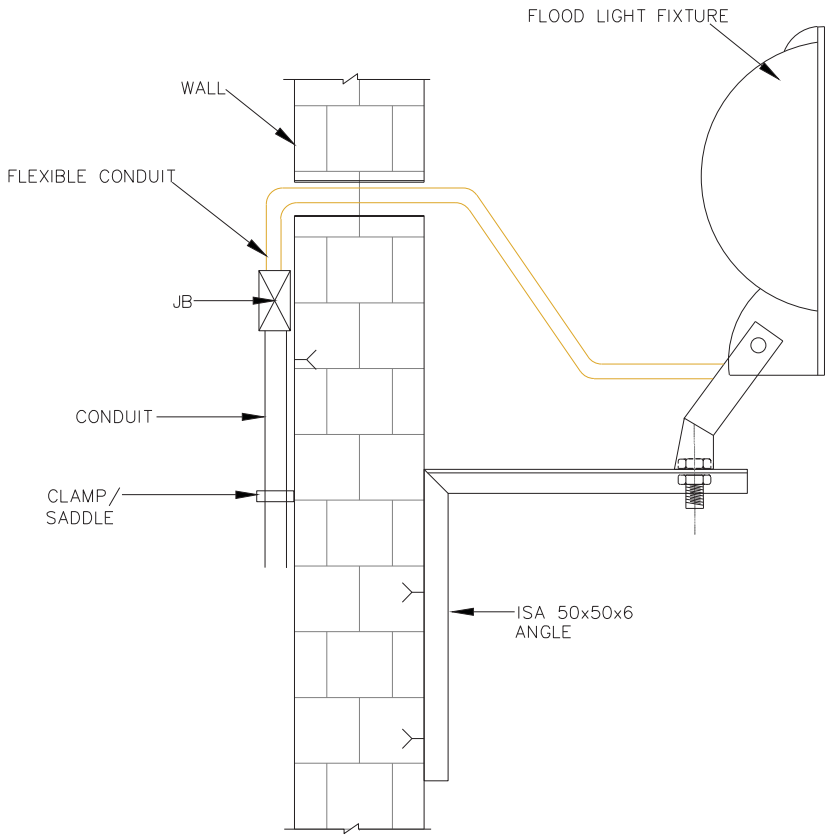

WALL MOUNTING
TYPE-R

General Notes:

1. Mounting arrangement can be changed/ modified on site as per site requirements.
2. In Lighting layout, Mounting arrangement also shown. If any Descrepency found on both documents than Consult with Design incharge/Site Incharge.
3. Quantity and Material shown in drawings are indicative only and may be change or vary as per site requirement.
4. If any new type of mounting required at site than we can optimized or change the arrangement with prior inform to BHEL site incharge.
5. All structural steel parts/supporting parts shall be hot dip galvanized as per BOQ/TS.

SIZE-A4

PERFORMANCE GUARANTEES TO BE DEMONSTRATED AT SITE

ANNEXURE - A

AVERAGE LUX LEVEL & TYPE OF LIGHTING FIXTURES:

S. NO.	LOCATION	AVERAGE LUX LEVEL	TYPE OF FIXTURE
1	Turbine Hall operating floor	200	High/medium bay LED Luminaire
2	Turbine Hall other platforms	200	LED high/medium bay, LED well glass fixtures
3	Switchgear rooms, Charger, Rectifier room	200	Industrial type LED luminaire
4	Control room, computer room, control equipment room	350	LED luminaire equivalent to Mirror optics with anti-glare features or down-lighter
5	Offices, conference rooms etc.	300	Decorative mirror optics type LED luminaire or LED down-lighter
6	Battery rooms	100	Totally enclosed corrosion proof LED luminaire
7	Transformer yard	20 (general) 50 (on equipment)	LED luminaire
8	Boiler platforms	100	LED well glass fixtures
9	Diesel generating room/enclosure, compressor room, pump house etc.	150	LED medium bay/Industrial type LED Luminaire
10	Fuel oil pump house	150	Flame proof fluorescent/LED type fixtures suitable for division-2 hazardous area
11	Cable galleries/vault	50	Industrial type LED Luminaire
12	Street lighting-		LED street lights
	Primary roads	20	
	Secondary roads	10	
13	Outdoor storage handling and unloading area	20	LED Luminaire
14	Cement stores	150	Industrial dust proof type LED luminaire
15	Chemical stores/ House	150	Corrosion proof LED luminaire
16	Permanent stores	150	LED high/medium bay/ Industrial trough LED luminaire
17	Laboratory		Corrosion proof LED luminaire
	General	150	
	Analysis area	300	
18	Garage/Car parking	50	Industrial type LED luminaire
19	Corridors, Walkways	50	LED luminaire
20	Building Periphery Lighting	10	LED Street Light fixture/ LED luminaire

21	Security Lighting along Boundary	10	LED Street Light fixture/ LED luminaire
22	ESP platform	150	LED well glass fixtures
23	Gate complex/ Time office	150	LED luminaire
24	Fire Water PH	150	LED high/ medium bay/ Industrial trough LED, Luminaire
25	O & M store	150	LED high/medium bay/Industrial trough LED luminaire
26	Pump/ Compressor Houses	150	LED medium bay/Industrial type LED Luminaire
26	**DC LIGHTING**		
	LOCATION	AVERAGE LUX LEVEL	TYPE OF FIXTURE
i)	Unit control room	100	LED down light fixtures, Decorative recessed type with cylindrical reflector
ii)	Control equipment room	100	LED
iii)	Strategic control points (in TG building & Boiler area, Switchgear room, SWAS, Battery room, UPS area, TG hall, Lube Oil Room etc.)	20 (only within 10m of these fixtures)	LED
27	**DC Lighting-Other area**		LED Industrial Bulkhead
i)	Cable Vault & galleries	1 fixture at every 20 mtr spacing along walkways	LED
ii)	Boiler Stair case	1 fixture at every 20 mtr spacing along walkways	LED
iii)	Exit/Entry of main plant building	1 fixture	LED
iv)	Fire Exit Sign	1 fixture (at each exit place)	LED

PERFORMANCE GUARANTEES TO BE DEMONSTRATED AT SITE

ANNEXURE - B

LIGHTING & LV POWER SERVICES IN DIFFERENT AREAS

S. NO.	AREA	ACN.	ACE	DCE	6/16A Socket	20A Socket	63A Socket	ELU $
1	TG building (turbine hall, switchgear room etc.)	Y (80%)	Y (20%)	Y	Y *	Y	Y	-
2	Boiler platforms & boiler area	Y (80%)	Y (20%)	Y	-	Y	Y	-
3	DG area/ room	Y (80%)	Y (20%)	-	-	Y	Y	-
4	Compressor room	Y (80%)	Y (20%)	-	Y *	Y	-	Y
5	ESP cum FGD control room	Y (80%)	Y (20%)	Y	Y *	Y	-	Y
6	Unit control room	Y (70%)	Y (30%)	Y	Y *	Y	-	-
7	Battery Room	Y (80%)	Y (20%)	-	-	Y	-	-
8	Cable spreader room/ vault	Y (80%)	Y (20%)	Y	-	Y	Y	-
9	Chemical house	Y (100%)	-	-	-	Y	Y	Y
10	Fuel Oil Pump House	Y (100%)	-	-	Y *	Y	Y	Y
12	CT Switchgear Room	Y (100%)	-	-	-	Y	-	Y
13	Ball mill building (BMB) lime stone grinding building house	Y (100%)	-	-	-	Y	Y	Y
14	RC Pump + Oxidation blower House (RCPH)	Y (100%)	-	-	-	Y	Y	Y
15	Gypsum dewatering building (GDWB)	Y (100%)	-	-	-	Y	Y	Y
16	SO2 Analyzer room	Y (100%)	-	-	-	Y	Y	Y
18	Service Building	Y (100%)	-	-	Y *	-	-	-
19	Area Lighting	Y (100%)	-	-	-	-	-	-
20	Street Lighting	Y (100%)	-	-	-	-	-	-
21	Transformer Yard and Storage Yard	Y (100%)	-	-	-	-	Y	-

LEGEND:	ACN:	AC Normal Lighting
	ACE:	AC Emergency Lighting
	DC:	DC Lighting (220V DC)
	Y:	YES
	Y*:	YES, Only in control room, offices & toilets
	$:	Emergency Lighting Unit (ELU) & 6/16A Switch socket for ELU

TECHNICAL SPECIFICATION FOR

LIGHTING SYSTEM (ERECTION, TESTING & COMMISSIONING)

SPECIFICATION NO. PE-SS-999-558-E003

CONTENTS

CLAUSE No.	DESCRIPTION
1.0	SCOPE OF WORK
2.0	CODES & STANDARDS
3.0	GUIDELINES FOR LIGHTING SYSTEM ERECTION WORK
4.0	TESTING & INSPECTION AT CONTRACTOR'S WORKS
5.0	DRAWINGS/ DOCUMENTS
6.0	PRICES

1.0 SCOPE OF WORK

The scope of installation work of the complete lighting and low voltage power services equipment shall be as follows:

1.1 Receipt at site, unloading, handling, unpacking, storing and preservation of all lighting equipment specified under technical specification (Supply) of “GENERAL TECHNICAL REQUIREMENT”, PART-A and all other materials required for completion of this package

1.2 Erection, testing and commissioning of complete lighting and low voltage power services for the power station.

1.3 The contractor’s scope shall also be deemed to include all such other equipment/materials and services required for the completeness of the job, but not listed above, as applicable and shall be quoted for accordingly.

1.4 Supply & erection of consumable like conduit accessories & fittings including couplers, conduit boxes, saddles, clamps, fixing hardwares, anchors, wedges, nuts & bolts, concrete inserts, materials required for mounting the fixtures, consumable and other incidental materials required to complete the installation testing & commissioning of complete lighting system for successful operation, & to the satisfaction of purchaser/ customer. Any other consumable not listed above but required for erection, testing and commissioning of the station lighting system and handing over to customer.
Supply /E &C Cost of erection consumables is deemed to be included in Main Supply/ Erection and Commissioning (installation) prices.

Minor civil works Plumbing/Grouting/Foundation required to complete the lighting installation are covered under the scope of this contract and form part of the item installation cost and are not payable separately. Chipping work to be done in the walls for concealed conduiting shall be in the bidder's scope. patch up after completion shall be done by bidder. Cost for same is deemed to be included in bidder’s E & C cost.

Fabrication charges of J-Pole shall be included in erection & commissioning prices of conduit, no separate charges shall be payable for the same.

Fabrication & painting charges of structural steel shall be part of erection charges for those equipment for which the same is being used.

1.5 Power cables from switchgear to LDB/WDB will be supplied by purchaser as free issue item to contractor. Laying of these cables are to be done by the bidder. Termination at switchgear end shall be by BHEL & at LDB/WDB end by bidder.

Power cables from lighting distribution boards LDBs to lighting panels (LPs), LDBs to street lighting panel, street lighting panels to poles and control cables from LDBs to remote street lighting control panel will be supplied by purchaser as free issue item to contractor, Laying & termination of these cables are to be done by the bidder. Rigid

Steel Conduits, PVC wires, Earthing flats, Earthing rod, 14 SWG earthing wires will be supplied by purchaser as free issue item to contractor, Laying & termination of these items are to be done by the bidder.

1.6 Supply & Erection of supporting structural steel i.e. angles, channels etc. are to be quoted on tonnage basis. During contract stage contractors has to furnish total requirement for structural steel.

1.7 All tools & tackles, ladders, testing equipment etc. required for erection, testing & commissioning of complete lighting system are to be arranged by the contractors.

1.8 The entire work shall be carried out in accordance with specified installation instruction, manufacturer's recommendations, purchaser's approved drawings and/or as directed by the purchaser. Manufacturer' drawings and instructions shall be correctly followed in handling setting, testing and commissioning of all equipment and care shall be taken in handling to avoid distortion to structures, marring of finished surface, damage to delicate instruments etc. The equipment shall be installed in a neat work-manship like manner.

1.9 The erection work shall conform to latest applicable Indian standards, codes and practices, Electricity rules, fire insurance regulations and safety regulations of the locality where the equipment will be installed. All apparatus, wiring and connections shall be designed so as to minimise risk of fire or any damage which will be caused in the event of fire. Contractor to furnish the installation drawings of all equipment for purchaser's approval.

2.0 CODES AND STANDARDS

The design, Manufacture and performance of equipment shall comply with all currently applicable regulations and safety codes in the locality where the equipment will be installed. Nothing in this specification shall be constructed to relieve the bidder of these responsibilities.

2.1 Unless otherwise specified, equipment offered shall conform to latest applicable Indian and IEC standards. Equipment complying with any other authoritative standards such as British, U.S.A, VDE etc. may also be considered provided these standards ensure performance equivalent to or superior to Indian Standards. In such cases the Bidder shall clearly indicate the standard adopted and furnish a copy of the latest English version of the standard along with the tender. Should there be any dispute of design standard, the most stringent one shall be followed. The relevant Indian Standards are:

<u>Lighting Wires</u>

IS: 694 PVC insulated cables for working voltages upto and including 1100V.

IS: 3961 Recommended current ratings for PVC insulation light out put cables.

IS: 5331 PVC insulation and sheath of electric cables

IS: 8130 Conductors for insulated electric cables and flexible cards.

IS: 10810 Methods of tests for cables.

Conduits & Accessories and Junction Boxes

IS: 1653 Rigid steel conduits for electrical wiring.

IS: 3480 Flexible steel conduit for electrical wiring.

IS: 2667 Fittings for rigid steel conduits for electrical wiring.

IS: 3837 Accessories for rigid steel conduits for electrical wiring.

IS: 4649 Adaptors for flexible steel conduits.

IS: 5077 Decorative Lighting outfits.

IS: 5133 Steel and Cast Iron Boxes. (Part-I)

IS: 5133 Boxes made of Insulating materials (part-II)

IS: 2629 hot dip galvanising of iron & Steel.

IS: 9537 Specification for conduits for Electricals installation. (part-I & II)

Electrical Installation Practices & Miscellaneous

IS: 5 Colour for ready mixed paints 2 enamels.

IS: 1293 3 Pin, Plug & Socket Outlets.

IS: 226 Structural steel (standard quality).

IS: 2509 Rigid non metallic conduits for electric wire.

IS: 371 Ceiling roses

IS: 3854 Switches for domestic and similar purposes.

IS : 5216 Guide for safety procedures and practices in electrical work.

IS: 1913 General and safety requirements for electric lighting fittings.

IS: 3419 Fittings for rigid non metallic conduit.

IS: 732 Code of practice for Electrical Wiring installation (System Voltage not exceeding 650V).

IS: 3646 Code of practice for interior illumination part I, II & III.

IS: 1944 Code of practice for lighting of public thorough forces.

IS: 3106 Code of practice for selection of installation and maintenance of fuses. (Voltage not exceeding 650V).

IS: 4615 Switch socket out let (Non-locking).

IS: 5571 Guide for selection of electrical equipment for hazardous areas.

IS: 5572 Classification of hazardous areas electrical installation.

IS: 800 Code of practice for use of structural steel in general building construction.

IS: 2633 Method of testing uniformity of coating in zinc plated articles.

IS: 6005 Code of practice for phosphating of form & steel.

IS: 3043 Code of practice for earthing.

INDIAN ELECTRICITY ACT AND RULES

IS: 6665 Code of practice for industrial lighting.

IS: 458 Specification for concrete pipes.

Fire Insurance Regulations

Rule no. 35, 48, 49, 50, 61 & 64 of Indian Electricity Rule with amendment-3 rules 1986
Regulations laid down by the chief Electrical Inspector of the State.

3.0 GUIDELINES FOR LIGHTING SYSTEM ERECTION WORK.

3.1 The contractor shall work in co-ordination with civil, air-conditioning, ventilation & switchgear vendors. Where holes or openings in walls and floors are required for routing the conduits, the contractor shall provide the same. Cut-outs in false ceiling shall be provided by false ceiling contractor.

3.2 The contractor shall be responsible if any parts of lighting fixtures, LDBs, LPs are lost or damaged and lamps are broken during installation. All damage and thefts shall be made good by the contractor till the installation is handed over to the customer.

3.3 The contractor shall note that for any change in the location of lighting panels, lighting fixtures, switch boxes/receptacles, no extra charges will be paid so long as the modifications are indicated to the contractor before commencement of the work on that particular equipment or circuit.

3.4 The contractor shall have a separate cleaning team to clean all equipment under erection as well as the work area and the project site at regular intervals to the satisfaction of Engineer-in-charge. In case this is not done, the purchaser will have the right to carry out the cleaning operation and any expenditure incurred in this regard will be to the contractor account.

3.5 Except as specifically approved by the Engineer-in-Charge, installation of exposed conduits, mounting of lighting fixtures, etc. shall be taken up only after other services such as piping, air ducting, cable tray/bus duct hangers, structural bracing's etc. in a particular area have been installed

3.6 After installation of lighting fixtures/receptacles, panel number and circuit number shall be painted on them at a suitable place

3.7 Lighting Fixtures and Accessories.

3.7.1 Lighting fixtures of appropriate type as per the lighting layout drawings shall be installed by the contractor. The type of mounting arrangement of fixtures shall be selected from the typical arrangements shown in enclosed fixture mounting details drawings in COMPLIANCE DRAWING: Annexure-F "Typical mounting Arrangement". The type of mounting will generally be indicated on the layout drawings. The exact mounting will, however, be decided at site depending upon the actual space/other facilities available at site.

3.7.2 The contractor shall submit for purchaser's approval the drawings showing the detailed mounting arrangements of various types of fixtures prior to installation.

3.7.3 Wooden plugs in walls and ceilings for fixing of lighting fixtures and accessories are not acceptable. A suitable fool-proof method (preferably using nylon rawl plug) of fixing these shall be offered and this be subject to the purchaser approval.

3.7.4 The bracket for mounting the lighting fixtures on boiler platforms shall be fabricated at site using 40 mm GI conduit with a reducing socket to suit the fixture and clamped to the hand rails. However, the clamping of these conduits at points of large vibrations should be avoided. The fixing shall be strong enough to withstand vibrations and wind velocity. If a roof (or other platform over the platform is available, the fixture will be pendant mounted (supported to the structural members of the platform above).

3.7.5 Flood lights shall be mounted on steel base facing the tentative direction shown on drawings. Bolts shall be tightened with spring washers. Terminals connection to the flood lights shall be through flexible conduits.

3.7.6 In the rooms where false ceilings are provided, the lighting fixtures shall be supported separately by false ceiling grid of roof over false ceiling if it is of steel structural or form ceiling and not by the false ceiling board. The arrangement shall be to the approval of purchaser. The erection rate of lighting fixtures shall include the supply of steel brackets, supporting, anchoring material, hardware and also steel brackets/hangers for bridging the gap above false ceilings, etc., required for installation of lighting fixtures as shown in the approved fixture mounting arrangement drawings.

3.7.7 A four (4) way terminal junction box type F shall be provided near each lighting fixture, for loop-in, loop-out and off connection of lighting wires or as required.

3.7.8 To distinguish emergency AC fixtures form normal AC fixtures, red painted circular mark of 1 cm dia. shall be provided on emergency fixtures.

3.7.9 The self contained emergency lighting fixtures shall be installed in required areas. Mounting brackets are to be provided by the contractor.

3.8 Lighting distribution board and Lighting Panels.

3.8.1 Lighting DB's consisting of lighting transformer etc, shall be mounted on floor and LP's shall be mounted on the walls/columns/steel structures at the locations indicated in the drawings.

3.8.2 Suitable Space provision for LDB mounting on floor would be made by the purchaser. The contractor will supply necessary foundation bolts and do the grouting to fix up the LDBs.

3.8.3 LPs shall be installed by fastening to studs of not less than 12 mm dia. which will be suitably grouted/welded to the wall/column by the contractor. All the required accessories including studs for the erection of the panel shall be supplied by the contractor. If Mounting channels are required for, LPs the same will be provided by contractor.

3.8.4 Unless specifically noted otherwise on the drawings the height of the centre line of lighting panels from the floor shall be 1200 mm.

3.9 Lighting control Switch Boxes & Receptacle Boxes.

3.9.1 The locations of switch/receptacle boxes will be approximately as shown in the drawings. The exact location shall be finalised by the contractor in consultation with the engineer-in-Chief.

3.9.2 All switch/receptacle boxes in offices and control room shall be flush mounted in the wall. In other areas they shall be mounted on wall or column.

3.9.3 Unless Otherwise noted on the drawings the mounting height of switch/receptacle boxes shall be as follows.

i. Lighting Control switch boxes - 1500 mm.
ii. Receptacle boxes 500 mm for indoor and 900 mm for outdoor locations.

3.10 Conduits and Accessories

3.10.1 All lighting wires shall be run inside the conduit. Size of conduit shall be selected as per the table given below.

Size of Wire	Max. number of wires in 20mm conduit	25mm conduit
1.5 sq. mm.	4	
2.5 sq. mm.	4	
4.0 sq. mm.		4

Note: Conduit filling criteria to be met.

3.10.2 Conduit shall run along wall, floor, ceiling, on steel structures, embedded in wall, floor, for ceiling, in accordance with relevant layout drawings. The contractor shall closely co-ordinate his work with the civil contractor. Exposed conduits shall be run in straight lines parallel to building columns, beams and walls. Unnecessary bends and crossings shall be avoided to present a neat appearance. In the office area as specified conduits shall be embedded along the entire run. It is the responsibility of the lighting contractor to co-ordinate with the civil contractor of these buildings. Conduits supports shall be provided at an interval of 750 mm for horizontal runs and 1000 mm vertical runs

3.10.3 Conduit shall be clamped on to approved type spacer plates or brackets by saddles or U-bolts. The spacer plates or brackets in turn, shall be securely fixed to the building steel by welding and to concrete or brick work by grouting or by nylon rawl plugs.

3.10.4 Embedded conduits shall be securely fixed in position to preclude any movement. In fixing embedded conduit, if welding or brazing is used, extreme care should be taken to avoid any injury to the inner surface of the conduit.

3.10.5 Spacing of embedded conduits shall be such as to permit flow of concrete between them and in no case shall be less then 40mm.

3.10.6 Where conduits are along cable trays provided by purchaser, they shall be clamped to supporting steel at an interval of 600 mm.

3.10.7 For direct embedding in soil, the conduits shall be coated with an asphalt base compound. Concrete pier or anchor shall be provided where necessary to support the conduit rigidly and to hold it in place.

3.10.8 Conduits shall be installed in such a way as to ensure against trouble from trapped condensation.

3.10.9 The contractor shall made available at site, dies for threading various conduits. Running threads shall be avoided as far as practicable. Where it is unavoidable, check nut shall be used. All field thread ends shall be reamed after threading and anti-corrosive paint applied.

3.10.10 Conduits shall be kept, wherever possible, at least 300 mm away from hot pipes, heating devices etc.

3.10.11 Slip joints shall be provided when conduits cross structural expansion joints or where long run of exposed conduits are installed, so that temperature change will cause no distortion due to expansion or contraction of conduit run

3.10.12 For long conduit runs junction/pull boxes shall be provided at suitable intervals (not exceeding 10 m) to facilitate wiring.

3.10.13 Conduits shall be securely terminated at LPs/junction boxes or lighting fixtures by proper fastening with a lock put on inside and outside. The number of conduits terminating at LP's shall not exceed the permissible number considering the glanding area of lighting panel. Conduit terminations shall be made water & vermin proof.

3.10.14 Conduits lengths shall be joined by a crewed couplers. Conduit shall be cleanly cut. The cut ends shall be within three (3) degrees of square with the conduit axis. Cut ends shall be reamed and all burrs and sharp edges removed.

3.10.15 Conduits lengths shall be jointed connection and shall be made thoroughly water-tight and rust-proof by application of a thread compound which will not insulate the joints. White lead will be uses for embedded conduit and red lead for exposed conduit.

3.10.16 Water treatment plant chlorination plant, Battery Room lighting installations shall be made with epoxy coated steel conduits and accessories.

3.10.17 Field bends shall have a minimum radius of four (4) times the conduit diameter. All bends shall be free of kinks, indentations or flattened surfaces. Heat shall not be applied in making any conduct bend. Separate bends may be sued for this purpose.

3.10.18 The entire metallic conduit system, whether embedded or exposed, shall be electrically continuous and thoroughly grounded where slip joints used, suitable bending shall be provided around the joint to ensure a continuous ground circuit.

3.10.19 Conduits and fittings shall be properly protected during construction period against mechanical injury. Conduit ends shall be plugged or capped to prevent entry of foreign material.

3.10.20 After installation, the conduits shall be thoroughly cleaned by compressed air before pulling in the wire.

3.10.21 Lighting fixtures shall not be suspended directly from the junction box in the main conduit run.

3.11 Lighting wires

3.11.1 Lighting wires from lighting panels to junction boxes and junction boxes to lighting fixtures, switch boxes and receptacle boxes shall run in conduits (Rigid/flexible).

3.11.2 All wires in a conduit shall be drawn simultaneously. No subsequent drawing is permissible.

3.11.3 Wires shall not be pulled through more than two equivalent 90 deg. bends in a single conduit run. Wherever required, suitable conduit junction boxes/pull boxes shall be provided. All types of wiring, concealed or unconcealed shall be capable of easy inspection.

3.11.4 Receptacles and lighting circuits shall be fed from different circuits. The switch controlling these circuits shall be on the live side (phase wire) of the circuits.

3.11.5 A.C. normal, A.C. emergency and D.C. emergency system wiring shall run throughout in separate conduits.

3.11.6 Wiring shall be spliced only at junction boxes. Maximum two wires shall be connected at each terminal.

3.11.7 In vertical run of wires in conduit the wires shall be suitably supported by means of wooden/hard rubber plugs at each pull/junction box.

3.11.8 All lighting wires shall be crimped using suitable type of solderless, crimping, tinned fork type copper lugs. Cost of supply & erection of the lugs shall be included in the erection cost of wires.

3.12 Junction Boxes

3.12.1 Junction boxes having volume upto 1600 cubic centimetre may be installed without any support other than that resulting from connecting conduits where two or more rigid metallic conduits enter and accurately position the box. Boxes shall be installed so that they are levelled, properly aligned and present a pleasing appearance. Boxes with volumes greater that 1600 cubic cm. or for other reasons not rigidly held, shall be adequately supported. The contractor shall perform all drilling, cutting, welding, shimming and bolting required for attachment to supports.

3.12.2 Necessary holes for conduit/cable entry shall be done during installation depending on the requirement. The holes shall be drilled/punched neatly and shall be dust/vermin proof after installation of the conduit.

3.12.3 All welds, bolts holes, conduit entry holes etc. made during installation as mentioned above shall be wire brushed and touched up with metal primer (lead oxide and zinc chromate in synthetic medium

3.13 Street Lighting/Flood Lighting Poles

3.13.1. The lighting poles and lighting Tower shall be erected by the contractor at locations shown in the road lighting layout to be prepared by contractor and shall be got approved from the purchaser. The erection work shall include making of foundations (with supply and E&C of all materials). Installation of necessary wiring/ cabling, junction box, (JB not applicable for octagonal poles)/switch box and mounting of assembled fittings. All the above erection work shall be done by contractor for lighting poles including making of foundations.50mm GI pipe/HDPE pipe shall be provided for cable protection from trench to junction box by the contractor for loop-in-loop-out cables. The cost of all the erection material required for foundation works shall be included in the cost of E&C of Street Lighting/Flood Lighting Poles.

3.13.2 The lighting poles shall be painted with two coats of aluminium paint after completion of installation or as specified by purchaser.

3.13.3 The flood light fixtures shall be mounted on galvanised M.S. base making use of shop drilled holes or by suitable clamps. No cutting or drilling of galvanised structure is permitted.

3.13.4 Each lighting poles and lighting/lightning mast junction box shall be earthed by 25X3 mm GS flat bonded to one (1) 40 mm dia MS Rod of 3 meter length driven vertically in the ground. The flat and electrode shall be supplied by BHEL and free issued to the bidder Laying & termination of these items are to be done by the bidder. 14 SWG GI wire shall be taken from fixture to JB.

The bidder shall submit the foundation drawings of poles/masts for purchaser's approval.

3.14 Earthing of lighting system

3.14.1 All junction boxes, receptacles, switch boxes, lighting fixtures, conduit etc. shall be earthed in compliance with the provision of I.E. rules and applicable Indian Standard amended upto date.

3.14.2 A continuous earth conductor of 14 SWG G.I. wire shall be run all along each conduit run and bonded at every 600 mm by not less than two turns of the same size of wires. This conductor shall be connected to the earth bus of lighting panel from which the

conduits originate. All junction boxes, receptacles, lighting fixtures etc. shall be connected to this 14 SWG GI earth conductor. All lighting panels and LDBs shall be earthed by GI flats to the purchasers earthing bus. The flat and 14 SWG GI wire shall be supplied by BHEL and free issued to the bidder Laying & termination of these items are to be done by the bidder.

3.15 Ceiling Fans and Regulators (If Applicable)

3.15.1 The contractor shall install the ceiling fans and regulators at the locations shown in the relevant drawings. The exact location will however, be decided at site in consultation with engineer-in-charge.

3.15.2 The fan regulators shall be flush mounted on the lighting control switch boxes provided in that area.

3.15.3 Hook alongwith rubber bush shall be supplied and grouted by contractor in ceiling for mounting the fan. All necessary material and hard wares for installation shall be supplied by contractor.

3.16 Foundation & Civil Works

3.16.1 Equipment foundations, for street lighting Poles/Flood Lighting Poles, street lighting panel and other panels mounting foundation and other civil work including supply of cement, steel and other materials as per relevant drawings and specification clauses shall be provided by the contractor. Channel, insert plate etc. required for erection of LDB, WDB is in bidder's scope. Cost of foundation works is to be quoted as part of E & C rates for these items. The cost of necessary material required for foundation works is deemed to be included in the cost of E&C.

3.16.2 All foundation drawings shall be subject to the purchaser's approval. However, it shall be the responsibility of the contractor to check these foundations before commencement of erection to ensure their suitability.

3.16.3 Al final adjustment of foundation levels, chipping and dressing of foundation surfaces, setting and grouting of anchor bolts, sills, inserts and fastening devices shall be carried out by the contractor including minor modification of civil work as may be required for erection.

3.16.4 Any cutting of masonry/concrete work, which is necessary, shall be done by the contractor at his own cost and shall be made good to match the original work. The contractor shall obtain approval of the purchaser before proceeding with any cutting of masonry/concrete work.

3.16.5 The contractor shall perform all excavation and backfilling work required for buried cable work, foundation of poles & mast work, ground connection etc. and casting foundations.

3.16.6 Excavation shall be performed upto the required depth. Such sheeting and shorting shall be done as may be necessary for protection of the wall. All excavation shall be backfilled to the original level with good consolidation.

3.16.7 The contractor shall make use of his own arrangements for pumping out any water that may be accumulated in the excavation.

3.16.8 All supports, hangers & brackets shall be fabricated by the contractor. Steel for fabrication shall be straightened and cleaned of rust and grease. All fabrication shall be free of sharp edge. The cost of necessary material required for foundation works is deemed to be included in the cost of E&C.

3.17 Cabling work:

3.17.1 The owner will supply necessary cables required for the system as per the specification & the bidder shall have to lay & terminate the same. This shall include all clamping, fixing, drilling, cutting, glanding, luging, connecting to terminal blocks, grounding etc. as required to complete the job. Cost of Supply & Erection of all consumable materials required for cable laying & cable termination shall be included in the erection rate to be quoted by the bidder.

3.17.2 Bidder shall supply all necessary glands & lugs required for cable termination carried out by him. Size of glands & lugs shall be as per the size of the cables selected during detailed engg.

3.17.3 Cable glands shall be double compression type & made of tin-plated heavy-duty brass casting and machine finished. Glands shall be of robust construction capable of clamping cable & cable armour firmly without injury to the cable. Thickness of tin coating shall not be less than 10 microns. All washers and hardwares shall be made of brass & tinned. Rubber components used in the glands shall be made of neoprene of tested quality.

3.17.4 Cable lugs shall be tinned copper, solderless crimping type, conforming to IS:8309 suitable for Al or Cu conductors. Crimping of terminals shall be done by using corrosion inhibitory compound.

3.17.5 All cable entry points shall be sealed & made vermin & dust proof. Unused opening shall be effectively closed.

3.17.6 Cables shall be laid in owner's trays wherever available. In areas, where owners trays are not available, cable shall be clamped to the structures or laid in conduit or buried depending on the area.

3.17.7 Each cable shall be tagged with the cable no. as per cable schedule. The tag shall be of rectangular shape & attached to the cable by not less than two turns of 20 SWG GI wire. Cable tag shall be provided at each end of the cable before entering the

equipment enclosure, on both sides of wall or floor crossing and every 30 meter of cable runs.

3.17.8 Minimum bending radius for the cables shall not be less than 12D, where D is the overall dia of the cable.

3.17.9 Buried cables shall be laid and covered with sand/riddled earth, and protected from damage by bricks at sides and pre cast concrete slab at top. Buried cables shall have cable markers at 50M interval and projecting 150mm above ground. At cable bends and joints markers shall be provided. All civil works for directly buried cables in bidder's scope and is deemed to be included in bidder's E & C cost of buried cables. Typical drawing for buried cables to be submitted by contractor for customer approval in Mounting arrangement of Misc. Item drawing.

3.18 Steel Fabrication

3.18.1 The steel structures supplied and fabricated by the contractor shall be made from standard quality steel sections/flats/plates. The steel fabricated structures shall be free from defects, cleaned of rust, grease, oil etc,. and sharp edges shall be removed.

3.18.2 The welds shall be wire brushed or cleaned otherwise. The holes shall be touched up with metal primer.

3.18.3 All steel fabrications shall be painted with two coats of metal primer (lead oxide and zinc chromate in synthetic medium) followed by two coats of aluminium paint. The welds to galvanised steel shall be touched up with galvanised weld rod applied in accordance with manufacturer's instruction.

3.19 Cutting & wastage allowances:

3.19.1 Contractor shall carefully plan cutting schedule of each cable drum, conduit, lighting wires, GI wires such that wastages are minimised and any resultant short length can be used where appropriate route length are available. The following wastage's allowances are permissible for various materials.

3.19.2 Power cables, control cables, Rigid Steel conduits and PVC wires, Cutting & wastage's allowance shall be computed on the length actually measured, used & accepted. Break up of above 3% wastage allowances are given below:

a) 1% unaccountable wastage.
b) 2% accountable wastage.

Note: Usable length to be returned to purchaser. Minimum wastage length is to be decided in consultant with site engineers.

3.19.3 The contractor shall take-back the unused installation materials which has not been entered in the measurement records by the purchaser after completion of job.

3.20 Quantity measurement:

3.20.1 For all payment purpose, measurement shall be made on physical measurements. Physical measurements shall be made by the contractor in the presence of the site engineer/purchaser.

3.20.2 The measurement of cable lying shall be made on the basis of length actually laid from lug to lug including that of loops provided.

3.20.3 In the measurement of conduits, the accessories will not be included.

3.20.4 -deleted-

3.20.5 The accountable wastage to be returned to purchaser's store in good condition and as directed by site engineer.

3.20.6 Any wastage granted by the vendor in excess of the allowable percentage shall be charged at the panel rates decided by the site engineer whose decision shall be final and binding on the vendor.

3.21 Contractor to make a protocol in consultation with site engineer and customer's representative for erection, testing & commissioning of all lighting equipment.

4.0 TESTING & INSPECTION AT CONTRACTOR'S WORKS

4.1 Standard quality plan (QP) for lighting equipment is enclosed. Bidder to confirm compliance to this QP by signing every page of it.

4.2 All accessories shall be subject to routine and type tests in accordance with requirement of appropriate IS in the presence of purchaser's representative.

4.3 Samples selected by the purchaser of all galvanising material shall be subjected to galvanising tests. All fittings, fabrications, hardwares etc. as specified shall be inspected & tested in accordance with IS recommendation. Type test certificates from National Test House or from reputed agency shall be considered.

4.4 Field quality plan for quality checks to be observed at site during erection, testing & commissioning shall also be furnished by contractor alongwith offers as per standard format.

4.5 Testing and commissioning

4.5.1 On completion of installation work, the Contractor shall request the Project manager for inspection and test with minimum of fourteen (14) days advance notice.

4.5.2 The site engineer shall arrange for joint inspection of the installation by purchaser's and customers representative for completeness and correctness of the work. Any defect pointed out during such inspection shall be promptly rectified by the contractor.

4.5.3 The installation shall be then tested and commissioned in presence of the site Engineer & customer's representative.

4.5.4 The contractor shall provide all men, material and equipment required to carry out the tests.

4.5.5 All rectification's, repairs or adjustment work found necessary during inspection, testing and commissioning shall be carried out by the contractor without any extra cost. The handing over of the lighting installation shall be affected only after the receipt of written instruction from the site engineers/ customer.

4.5.6 The testing shall be done in accordance with the applicable Indian standards and codes of practice. The following tests shall be specifically carried out for all lighting installation.

i. Insulation resistance
ii. Testing of earth continuity path
iii. Polarity test of single-phase switches.
iv. Functional Checks

4.5.7 The lighting circuits shall be tested in the following manner.

i. All switches ON and consuming devices in circuit, both poles connected together, to obtain resistance to earth.

ii. Insulation resistance between poles with lamps and other consuming devices removed and switches ON

5.0 DRAWINGS/ DOCUMENTS

Refer documents to be submitted.

6.0 PRICES

6.1 The contractor shall quote his prices for supply, erection, testing & commissioning of complete lighting system as per format attached with the specification.

6.2 deleted.

6.3 The unit rates of supply & installation (E & C) for all equipment and service quoted by the bidder shall be firm for a variation of quantities as per NIT

6.4 Purchaser reserves the right to right to delete/add any equipment or services from the bidder's scope and for price adjustment in such cases, unit prices quoted by the bidder will be considered.

6.5 The bidder shall furnish unpriced price schedule of all equipment and services alongwith the technical bid.

QUALITY PLAN OF LIGHTING FIXTURES

	ITEM (MATERIAL, CLASS, GRADE, RATING, RANGE, SIZE ETC.) : मद (सामग्री, वर्ग, ग्रेड, रैंटिंग, रेंज, आकार आदि): LIGHTING FIXTURES (Conventional and LED type)	STANDARD QUALITY PLAN स्टैण्डर्ड क्वालिटी प्ला	QP NO / क्यूपी सं..:	0000-999-QOE– S - 062	REVIEWED BY: द्वारा समीक्षा की गई:	APPROVED BY: द्वारा अनुमोदित:
			REV NO / संशोधित सं..:	01	POONAM ADHIKARI	S S MISHRA
		CONFORMING TO CODE: कोड के अनुरूप: NTPC TECHNICAL SPECIFICATIONS	DATE/ तिथि	04.10.2022	S N TRIPATHI	
			PAGE / / पृष्ठ	1 OF 10	S K LAL	

SL. NO क्र.सं.	COMPONENT & OPERATIONS अवयव व संचालन		CHARACTERISTICS/ विशेषताएं	CLASS वर्ग	TYPE OF CHECK जांच के प्रकार	QUANTUM OF CHECK जांच के परिमाण		REFERENCE DOCUMENT संदर्भ दस्तावेज	ACCEPTANCE NORMS/ स्वीकृत मानदंड	FORMAT OF RECORD/ रिकॉर्ड का प्रारूप		AGENCY/ एजेंसी			REMARKS/टिप्पणियां
						M एम	C/ N सी/एन					M	C	N	
1.	2.		3.	4.	5.	6.		7.	8.	9.	D*	** 10			11
NOTE	1) LIGHTING FIXTURES SUPPLIER TO ENSURE THAT CONSTRUCTIONAL FEATURES OF LIGHTING FIXTURE (CONVENTIONAL & LED TYPE) ARE AS PER NTPC SPECIFICATION REQUIREMENT. 2) LIGHTING FIXTURES SUPPLIER TO MAINTAIN ALL QUALITY CONTROL RECORDS IDENTIFIED IN THIS QP WHETHER IT IS IDENTIFIED FOR NTPC VERIFICATION OR WITNESS OR NOT. 3) BOI LIST AND RAW MATERIAL MAKE LIST SHALL BE SUBMITTED FOR PROJECT SPECIFIC PACKAGE FOR ENDORSMENT DURING APPROVAL OF QAP.														
	CONVENTIONAL TYPE LIGHTING FIXTURE														
A	BOUGHT OUT ITEMS / IN-PROCESS CHECKS														
1	Lamps		Make, rating & type	Major	Visual	1 sample per type	1 sample per type	NTPC specification requirements for rating & type, Make to be BIS approved with CML number	NTPC specification requirements for rating & type, Make to be BIS approved with CML number			V	-	-	
1.1	Electronic Ballast (if applicable)	a	Certificate of compliance	Major	Visual	-	-	NTPC specification requirements	Certificate of compliance by ballast manufacturer / lighting fixture supplier that ballast meets all NTPC specification requirements	Certificate of compliance		V	-	-	

LEGEND:/ संकेतिका: * RECORDS, INDENTIFIED WITH "TICK" (√) SHALL BE ESSENTIALLY INCLUDED BY SUPPLIER IN QA DOCUMENTATION. / * "टिक" (..) के साथ प्रमाणित रिकॉर्ड, क्यूए दस्तावेजीकरण में आपूर्तिकर्ता द्वारा अनिवार्य रूप से शामिल किया जाएगा।

** **M:** MANUFACTURER / SUB-SUPPLIER /निर्माता / उप-आपूर्तिकर्ता **C:** MAIN CONTRACTOR / मुख्य संविदाकार, **N**: NTPC/ एनटीपीसी **P:** PERFORM/ निष्पादन **W**: WITNESS/ गवाह AND **V:** VERIFICATION. AS APPROPRIATE/ सत्यापन (जैसा उपयुक्त हो), **CHP**/ सीएचपी: NTPC SHALL IDENTIFY IN COLUM "N" AS 'W'.: एनटीपीसी खंड "N" में **"W'** के रूप में करेगा ।

SL. NO क्र.सं.	COMPONENT & OPERATIONS अवयव व संचालन		CHARACTERISTICS/ विशेषताएं	CLASS वर्ग	TYPE OF CHECK जांच के प्रकार	QUANTUM OF CHECK जांच के परिमाण M एम	C/ N सी/एन	REFERENCE DOCUMENT संदर्भ दस्तावेज	ACCEPTANCE NORMS/ स्वीकृत मानदंड	FORMAT OF RECORD/ रिकॉर्ड का प्रारूप		AGENCY/ एजेंसी M	C	N	REMARKS/टिप्पणियां
1.	2.		3.	4.	5.	6.		7.	8.	9.	D*	** 10			11
		b	THD and pf check	Major	Electrical	Mnfr std.	-	NTPC specification requirements	THD<=10%, pf>=0.9 for FH type pf>=0.95 for other type of florescent lighting fixtures	Inspection report		P/ V*	-	-	P/V* - means test will be performed either by lighting fixture supplier or their sub-vendor and Verified by lighting fixture supplier
1.2	Castings		Freedom from defects	Major	Visual	Mnfr std.	-	NTPC specification requirements	Casting shall be free from any defects such as blow holes, surface blisters, cracks and cavities etc.	Inspection report		P/ V*	-	-	P/V* - means test will be performed either by lighting fixture supplier or their sub-vendor and Verified by lighting fixture supplier
1.3	Sheet metal forming and fabrication		Freedom from defects	Major	Visual	Mnfr std.	-	NTPC specification requirements	Sheet metal fabrication / forming etc. should be as per manufacturer drgs.	Inspection report		P/ V*	-	-	P/V* - means test will be performed either by lighting fixture supplier or their sub-vendor and Verified by lighting fixture supplier

LEGEND:/ संकेतिका: * RECORDS, INDENTIFIED WITH "TICK" (√) SHALL BE ESSENTIALLY INCLUDED BY SUPPLIER IN QA DOCUMENTATION. / * "टिक" (..) के साथ प्रमाणित रिकॉर्ड, क्यूए दस्तावेजीकरण में आपूर्तिकर्ता द्वारा अनिवार्य रूप से शामिल किया जाएगा।

** **M:** MANUFACTURER / SUB-SUPPLIER /निर्माता / उप-आपूर्तिकर्ता **C:** MAIN CONTRACTOR / मुख्य संविदाकार, **N**: NTPC/ एनटीपीसी **P:** PERFORM/ निष्पादन **W**: WITNESS/ गवाह AND **V:** VERIFICATION. AS APPROPRIATE/ सत्यापन (जैसा उपयुक्त हो), **CHP**/ सीएचपी: NTPC SHALL IDENTIFY IN COLUM "N" AS 'W'.: एनटीपीसी खंड "N" में **"W'** के रूप में करेगा ।

SL. NO क्र.सं.	COMPONENT & OPERATIONS अवयव व संचालन		CHARACTERISTICS/ विशेषताएं	CLASS वर्ग	TYPE OF CHECK जांच के प्रकार	QUANTUM OF CHECK जांच के परिमाण M एम	C/ N सी/एन	REFERENCE DOCUMENT संदर्भ दस्तावेज	ACCEPTANCE NORMS/ स्वीकृत मानदंड	FORMAT OF RECORD/ रिकॉर्ड का प्रारूप		AGENCY/ एजेंसी M	C	N	REMARKS/टिप्पणियां
1.	2.		3.	4.	5.	6.		7.	8.	9.	D*	** 10			11
1.4	Pre-treatment and powder coating		Pre-treatment process checks, Powder coating finish, thickness, uniformity of coating and adhesion	Major	Visual, chemical & mech.	Mnfr std.	-	Mnfr standard, NTPC specification requirements	Nominal coating thickness 50 microns or more	Inspection report		P/ V*	-	-	P/V* - means test will be performed either by lighting fixture supplier or their sub-vendor and Verified by lighting fixture supplier
A	Acceptance Tests on Conventional Lighting fixture	a	Details of lot offered and Certificate of compliance that lighting fixture supplier has inspected the offered lot as per their own standard	Major	Visual	-	-	Lighting fixture supplier to submit the details of lot offered for NTPC inspection (Type of lighting fixtures, their batch number, sub-vendor name, quantity)	COC	List		P	V	V	The list may be used by NTPC for sample selection
		b	Lamp make	Major	Visual	100%	100%	Make to be BIS approved with CML number	Make to be BIS approved with CML number	Certificate of compliance		V	V	V	
		c	Constructional features including: Internal wiring, terminal block, earthing terminal, safety chain (if applicable)	Major	Visual	1 sample per type	1 sample per type	NTPC specification and NTPC approved data sheet/drg.	NTPC specification and NTPC approved data sheet/drawing.	Inspection report		P	W	W	

LEGEND:/ संकेतिका: * RECORDS, INDENTIFIED WITH "TICK" (√) SHALL BE ESSENTIALLY INCLUDED BY SUPPLIER IN QA DOCUMENTATION. / * "टिक" (..) के साथ प्रमाणित रिकॉर्ड, क्यूए दस्तावेजीकरण में आपूर्तिकर्ता द्वारा अनिवार्य रूप से शामिल किया जाएगा।

** **M:** MANUFACTURER / SUB-SUPPLIER /निर्माता / उप-आपूर्तिकर्ता **C:** MAIN CONTRACTOR / मुख्य संविदाकार, **N**: NTPC/ एनटीपीसी **P:** PERFORM/ निष्पादन **W**: WITNESS/ गवाह AND **V:** VERIFICATION. AS APPROPRIATE/ सत्यापन (जैसा उपयुक्त हो), **CHP**/ सीएचपी: NTPC SHALL IDENTIFY IN COLUM "N" AS 'W'.: एनटीपीसी खंड "N" में **"W'** के रूप में करेगा ।

SL. NO क्र.सं.	COMPONENT & OPERATIONS अवयव व संचालन	CHARACTERISTICS/ विशेषताएं	CLASS वर्ग	TYPE OF CHECK जांच के प्रकार	QUANTUM OF CHECK जांच के परिमाण M एम	C/ N सी/एन	REFERENCE DOCUMENT संदर्भ दस्तावेज	ACCEPTANCE NORMS/ स्वीकृत मानदंड	FORMAT OF RECORD/ रिकॉर्ड का प्रारूप		AGENCY/ एजेंसी M	C	N	REMARKS/टिप्पणियां
1.	2.	3.	4.	5.	6.		7.	8.	9.	D*	** 10			11
		d Electronic Ballast (if applicable for offered lighting fixtures) THD and pf check	Major	Electrical	1 sample per type	1 sample per type	NTPC specification	THD<=10%, pf>=0.9 for FH type and pf>=0.95 for other type of florescent lighting fixtures	Inspection report		P	W	W	At lighting fixture supplier test lab
		e Resistance to moisture test in case of lighting fixtures having IP X4 and above rating	Major	Mechanical	1 sample per type	1 sample per type	NTPC approved data sheet	IS 10322 Part I	Inspection report		P	W	W	
		f Resistance to dust (applicable if IP5X and above)	Major	Optical	Mnfr std.	Mnfr std.	NTPC approved Data sheet and accepted type test reports	Certificate of compliance	Certificate of compliance		P/ V*	V	V	P/V* - means test will be performed either by lighting fixture supplier or their sub-vendor and Verified by lighting fixture supplier

LEGEND:/ संकेतिका: * RECORDS, INDENTIFIED WITH "TICK" (√) SHALL BE ESSENTIALLY INCLUDED BY SUPPLIER IN QA DOCUMENTATION. / * "टिक" (..) के साथ प्रमाणित रिकॉर्ड, क्यूए दस्तावेजीकरण में आपूर्तिकर्ता द्वारा अनिवार्य रूप से शामिल किया जाएगा।

** **M:** MANUFACTURER / SUB-SUPPLIER /निर्माता / उप-आपूर्तिकर्ता **C:** MAIN CONTRACTOR / मुख्य संविदाकार, **N**: NTPC/ एनटीपीसी **P:** PERFORM/ निष्पादन **W**: WITNESS/ गवाह AND **V:** VERIFICATION. AS APPROPRIATE/ सत्यापन (जैसा उपयुक्त हो), **CHP**/ सीएचपी: NTPC SHALL IDENTIFY IN COLUM "N" AS 'W'.: एनटीपीसी खंड "N" में **"W"** के रूप में करेगा ।

SL. NO क्र.सं.	COMPONENT & OPERATIONS अवयव व संचालन	CHARACTERISTICS/ विशेषताएं	CLASS वर्ग	TYPE OF CHECK जांच के प्रकार	QUANTUM OF CHECK जांच के परिमाण M एम	C/ N सी/एन	REFERENCE DOCUMENT संदर्भ दस्तावेज	ACCEPTANCE NORMS/ स्वीकृत मानदंड	FORMAT OF RECORD/ रिकॉर्ड का प्रारूप		AGENCY/ एजेंसी M	C	N	REMARKS/टिप्पणियां
1.	2.	3.	4.	5.	6.		7.	8.	9.	D*	** 10			11
		g	Photometry check	Major	Optical	Mnfr std.	Mnfr std.	NTPC accepted type test reports	Certificate of compliance for the batch : that offered lighting fixture LOR is not be less than 90% (refer IS 16107) with reference to type test reports	Certificate of compliance		P/ V*	V	V	P/V* - means test will be performed either by lighting fixture supplier or their sub-vendor and Verified by lighting fixture supplier
		h	Dimensions	Major	Visual	1 sample per type	1 sample per type	NTPC specification and NTPC approved data sheet/drg.	NTPC specification and NTPC approved data sheet/drg.	Inspection report		P	W	W	
		i	HV & IR test	Major	Visual	#	#	IS 10322 part I	IS 10322 part I	Inspection report		P	W	W	# As per Table 1 (inspection Level S2) and Table 2C AQL 2.5 of IS 2500
	LED TYPE LIGHTING FIXTURE														
A	**BOUGHT OUT ITEMS / IN-PROCESS CHECKS**														
	LED Chip		LED chip efficacy	Major	Visual	Mnfr std.	Mnfr std.	NTPC Spec/ Appd. Data sheet/LM 80 report	NTPC Spec/ Appd. Data sheet	LM 80 report		V	V	V	At the time of final inspection
			LED chip CRI and CCT	Major	Visual	Mnfr std.	Mnfr std.	NTPC Spec/ Appd. Data sheet/LM 80 report	NTPC Spec/ Appd. Data sheet	LM 80 report		V	V	V	At the time of final inspection

LEGEND:/ संकेतिका: * RECORDS, INDENTIFIED WITH "TICK" (√) SHALL BE ESSENTIALLY INCLUDED BY SUPPLIER IN QA DOCUMENTATION. / * "टिक" (..) के साथ प्रमाणित रिकॉर्ड, क्यूए दस्तावेजीकरण में आपूर्तिकर्ता द्वारा अनिवार्य रूप से शामिल किया जाएगा।

** **M:** MANUFACTURER / SUB-SUPPLIER /निर्माता / उप-आपूर्तिकर्ता **C:** MAIN CONTRACTOR / मुख्य संविदाकार, **N**: NTPC/ एनटीपीसी **P:** PERFORM/ निष्पादन **W**: WITNESS/ गवाह AND **V:** VERIFICATION. AS APPROPRIATE/ सत्यापन (जैसा उपयुक्त हो), **CHP**/ सीएचपी: NTPC SHALL IDENTIFY IN COLUM "N" AS 'W'.: एनटीपीसी खंड "N" में **"W"** के रूप में करेगा ।

SL. NO क्र.सं.	COMPONENT & OPERATIONS अवयव व संचालन	CHARACTERISTICS/ विशेषताएं		CLASS वर्ग	TYPE OF CHECK जांच के प्रकार	QUANTUM OF CHECK जांच के परिमाण		REFERENCE DOCUMENT संदर्भ दस्तावेज	ACCEPTANCE NORMS/ स्वीकृत मानदंड	FORMAT OF RECORD/ रिकॉर्ड का प्रारूप		AGENCY/ एजेंसी			REMARKS/टिप्पणियां
						M एम	C/ N सी/एन					M	C	N	
1.	2.	3.		4.	5.	6.		7.	8.	9.	D*	** 10			11
			Reported TM21 (L80) lifetime of LED chip	Major	Visual	Mnfr std.	Mnfr std.	NTPC Spec/ Appd. Data sheet/LM 80 report	NTPC Spec/ Appd. Data sheet	LM 80 report		V	V	V	At the time of final inspection
	LED Driver	a	Compatibility with LED module/chip, controls & protection features as per NTPC spec	Major	Visual	-	-	NTPC Spec requirements	Certificate of compliance by LED driver manufacturer / lighting fixture supplier that driver meets all NTPC specification requirements	Certificate of compliance		V	V	V	
		b	THD and pf check	Major	Electrical	Mnfr std.	-	NTPC specification	THD < 10% and pf >= 0.9	Inspection report		P/ V*	-	-	P/V* - means test will be performed either by lighting fixture supplier or their sub-vendor and Verified by lighting fixture supplier
	Castings		Freedom from defects	Major	Visual	Mnfr std.	-	NTPC specification requirements	Castings shall be free from any defects such as blow holes, surface blisters, cracks and cavities etc.	Inspection report		P/ V*	-	-	P/V* - means test will be performed either by lighting fixture supplier or their sub-vendor and Verified by lighting fixture supplier

LEGEND:/ संकेतिका: * RECORDS, INDENTIFIED WITH "TICK" (√) SHALL BE ESSENTIALLY INCLUDED BY SUPPLIER IN QA DOCUMENTATION. / * "टिक" (..) के साथ प्रमाणित रिकॉर्ड, क्यूए दस्तावेजीकरण में आपूर्तिकर्ता द्वारा अनिवार्य रूप से शामिल किया जाएगा।

** **M:** MANUFACTURER / SUB-SUPPLIER /निर्माता / उप-आपूर्तिकर्ता **C:** MAIN CONTRACTOR / मुख्य संविदाकार, **N**: NTPC/ एनटीपीसी **P:** PERFORM/ निष्पादन **W**: WITNESS/ गवाह AND **V:** VERIFICATION. AS APPROPRIATE/ सत्यापन (जैसा उपयुक्त हो), **CHP**/ सीएचपी: NTPC SHALL IDENTIFY IN COLUM "N" AS 'W'.: एनटीपीसी खंड "N" में **"W'** के रूप में करेगा ।

SL. NO क्र.सं.	COMPONENT & OPERATIONS अवयव व संचालन		CHARACTERISTICS/ विशेषताएं	CLASS वर्ग	TYPE OF CHECK जांच के प्रकार	QUANTUM OF CHECK जांच के परिमाण M एम	C/ N सी/एन	REFERENCE DOCUMENT संदर्भ दस्तावेज	ACCEPTANCE NORMS/ स्वीकृत मानदंड	FORMAT OF RECORD/ रिकॉर्ड का प्रारूप		AGENCY/ एजेंसी M	C	N	REMARKS/टिप्पणियां
1.	2.		3.	4.	5.	6.		7.	8.	9.	D*	** 10			11
	Sheet metal forming and fabrication		Freedom from defects	Major	Visual	Mnfr std.	-	NTPC specification requirements	Sheet metal fabrication / forming etc. should be as per manufacturer standards and good engg practices	Inspection report		P/ V*	-	-	P/V* - means test will be performed either by lighting fixture supplier or their sub-vendor and Verified by lighting fixture supplier
	Pre-treatment and powder coating		Pre-treatment process checks, Powder coating finish, thickness, uniformity of coating and adhesion	Major	Visual, chemical & mech	Mnfr std.	-	Mnfr standard, NTPC specification requirements	Nominal coating thickness 50 microns or more	Inspection report		P/ V*	-	-	P/V* - means test will be performed either by lighting fixture supplier or their sub-vendor and Verified by lighting fixture supplier
B	Acceptance Tests on LED Lighting fixture	a	Details of lot offered and Certificate of compliance that lighting fixture supplier has inspected the offered lot as per their own standard	Major	Visual	-	-	Lighting fixture supplier to submit the details of lot offered for NTPC inspection (Type of lighting fixtures, their batch number, sub-vendor name, quantity)	-	List		P	V	V	The list may be used by NTPC for sample selection
		b	LED chip make	Major	Visual	-	-	NTPC accepted type test reports (LM80/LM79) report	Certificate of compliance	Certificate of compliance		V	V	V	

LEGEND:/ संकेतिका: * RECORDS, INDENTIFIED WITH "TICK" (√) SHALL BE ESSENTIALLY INCLUDED BY SUPPLIER IN QA DOCUMENTATION. / * "टिक" (..) के साथ प्रमाणित रिकॉर्ड, क्यूए दस्तावेजीकरण में आपूर्तिकर्ता द्वारा अनिवार्य रूप से शामिल किया जाएगा।

** **M:** MANUFACTURER / SUB-SUPPLIER /निर्माता / उप-आपूर्तिकर्ता **C:** MAIN CONTRACTOR / मुख्य संविदाकार, **N**: NTPC/ एनटीपीसी **P:** PERFORM/ निष्पादन **W**: WITNESS/ गवाह AND **V:** VERIFICATION. AS APPROPRIATE/ सत्यापन (जैसा उपयुक्त हो), **CHP**/ सीएचपी: NTPC SHALL IDENTIFY IN COLUM "N" AS 'W'.: एनटीपीसी खंड "N" में **"W'** के रूप में करेगा ।

SL. NO क्र.सं.	COMPONENT & OPERATIONS अवयव व संचालन	CHARACTERISTICS/ विशेषताएं	CLASS वर्ग	TYPE OF CHECK जांच के प्रकार	QUANTUM OF CHECK जांच के परिमाण M एम	C/ N सी/एन	REFERENCE DOCUMENT संदर्भ दस्तावेज	ACCEPTANCE NORMS/ स्वीकृत मानदंड	FORMAT OF RECORD/ रिकॉर्ड का प्रारूप		AGENCY/ एजेंसी M	C	N	REMARKS/टिप्पणियां
1.	2.	3.	4.	5.	6.		7.	8.	9.	D*	** 10			11
		c Constructional features including: Internal wiring, terminal block, earthing terminal, safety chain (if applicable)	Major	Visual	1 sample per type	1 sample per type	NTPC specification and NTPC approved data sheet/drg.	NTPC specification and NTPC approved data sheet/drg.	Inspection report		P	W	W	
		d Resistance to moisture test in case of lighting fixtures having IP X4 and above rating	Major	Mechanical	1 sample per type	1 sample per type	NTPC approved data sheet/drg.	IS 10322 part I	Inspection report		P	W	W	
		e Resistance to dust (applicable if IP5X and above)	Major	Optical	Mnfr std.	Mnfr std.	NTPC accepted type test reports	Certificate of compliance	Certificate of compliance		P/ V*	V	V	P/V* - means test will be performed either by lighting fixture supplier or their sub-vendor and Verified by lighting fixture supplier

LEGEND:/ संकेतिका: * RECORDS, INDENTIFIED WITH "TICK" (√) SHALL BE ESSENTIALLY INCLUDED BY SUPPLIER IN QA DOCUMENTATION. / * "टिक" (..) के साथ प्रमाणित रिकॉर्ड, क्यूए दस्तावेजीकरण में आपूर्तिकर्ता द्वारा अनिवार्य रूप से शामिल किया जाएगा।

** **M:** MANUFACTURER / SUB-SUPPLIER /निर्माता / उप-आपूर्तिकर्ता **C:** MAIN CONTRACTOR / मुख्य संविदाकार, **N**: NTPC/ एनटीपीसी **P:** PERFORM/ निष्पादन **W**: WITNESS/ गवाह AND **V:** VERIFICATION. AS APPROPRIATE/ सत्यापन (जैसा उपयुक्त हो), **CHP**/ सीएचपी: NTPC SHALL IDENTIFY IN COLUM "N" AS 'W'.: एनटीपीसी खंड "N" में **"W'** के रूप में करेगा ।

SL. NO क्र.सं.	COMPONENT & OPERATIONS अवयव व संचालन	CHARACTERISTICS/ विशेषताएं	CLASS वर्ग	TYPE OF CHECK जांच के प्रकार	QUANTUM OF CHECK जांच के परिमाण M एम	C/ N सी/एन	REFERENCE DOCUMENT संदर्भ दस्तावेज	ACCEPTANCE NORMS/ स्वीकृत मानदंड	FORMAT OF RECORD/ रिकॉर्ड का प्रारूप		AGENCY/ एजेंसी M	C	N	REMARKS/टिप्पणियां
1.	2.	3.	4.	5.	6.		7.	8.	9.	D*	** 10			11
		f Photometry check	Major	Optical	Mnfr std.	Mnfr std.	NTPC accepted type test reports, LM 79, IS 16106, IS 16107	Certificate of compliance for the batch: that offered lighting fixture LOR and lighting fixture efficacy is not be less than 90% (refer IS 16107) with reference to type test reports	Certificate of compliance		P/ V*	V	V	P/V* - means test will be performed either by lighting fixture supplier or their sub-vendor and Verified by lighting fixture supplier
		g Dimensions	Major	Visual	1 sample per type	1 sample per type	NTPC specification and approved data sheet/drg.	NTPC specification and approved data sheet/drg.	Inspection report		P	W	W	
		h LED driver: THD and pf check	Major	Electrical	1 sample per type	1 sample per type	NTPC specification	THD < 10% and pf >=0.9	Inspection report		P	W	W	At lighting fixture supplier test lab
		i LED driver: Precision current control check	Major	Electrical	1 sample per type	1 sample per type	NTPC specification	NTPC specification and NTPC approved data sheet	Inspection report		P	W	W	
		j LED driver: Open circuit protection simulation check	Major	Electrical	1 sample per type	1 sample per type	NTPC specification	NTPC specification and NTPC approved data sheet	Inspection report		P	W	W	
		k LED driver: Short circuit protection simulation check	Major	Electrical	1 sample per type	1 sample per type	NTPC specification	NTPC specification and NTPC approved data sheet	Inspection report		P	W	W	

LEGEND:/ संकेतिका: * RECORDS, INDENTIFIED WITH "TICK" (√) SHALL BE ESSENTIALLY INCLUDED BY SUPPLIER IN QA DOCUMENTATION. / * "टिक" (..) के साथ प्रमाणित रिकॉर्ड, क्यूए दस्तावेजीकरण में आपूर्तिकर्ता द्वारा अनिवार्य रूप से शामिल किया जाएगा।

** **M:** MANUFACTURER / SUB-SUPPLIER /निर्माता / उप-आपूर्तिकर्ता **C:** MAIN CONTRACTOR / मुख्य संविदाकार, **N**: NTPC/ एनटीपीसी **P:** PERFORM/ निष्पादन **W**: WITNESS/ गवाह AND **V:** VERIFICATION. AS APPROPRIATE/ सत्यापन (जैसा उपयुक्त हो), **CHP**/ सीएचपी: NTPC SHALL IDENTIFY IN COLUM "N" AS 'W'.: एनटीपीसी खंड "N" में **"W"** के रूप में करेगा ।

	ITEM (MATERIAL, CLASS, GRADE, RATING, RANGE, SIZE ETC.) : मद (सामग्री, वर्ग, ग्रेड, रैंटिंग, रेंज, आकार आदि): LIGHTING FIXTURES (Conventional and LED type)	STANDARD QUALITY PLAN स्टैण्डर्ड क्वालिटी प्ला	QP NO / क्यूपी सं..:	0000-999-QOE– S - 062	REVIEWED BY: द्वारा समीक्षा की गई:	APPROVED BY: द्वारा अनुमोदित:
			REV NO / संशोधित सं..:	01	POONAM ADHIKARI	S S MISHRA
		CONFORMING TO CODE: कोड के अनुरूप: NTPC TECHNICAL SPECIFICATIONS	DATE/ तिथि	04.10.2022	S N TRIPATHI	
			PAGE / / पृष्ठ	10 OF 10	S K LAL	

SL. NO क्र.सं.	COMPONENT & OPERATIONS अवयव व संचालन	CHARACTERISTICS/ विशेषताएं	CLASS वर्ग	TYPE OF CHECK जांच के प्रकार	QUANTUM OF CHECK जांच के परिमाण		REFERENCE DOCUMENT संदर्भ दस्तावेज	ACCEPTANCE NORMS/ स्वीकृत मानदंड	FORMAT OF RECORD/ रिकॉर्ड का प्रारूप		AGENCY/ एजेंसी			REMARKS/टिप्पणियां
					M एम	C/ N सी/एन					M	C	N	
1.	2.	3.	4.	5.	6.		7.	8.	9.	D*	** 10			11
		l LED driver: Over temperature protection simulation check	Major	Electrical	1 sample per type	1 sample per type	NTPC specification	NTPC specification and NTPC approved data sheet	Inspection report		P	W	W	
		m LED driver: Overload protection simulation check	Major	Electrical	1 sample per type	1 sample per type	NTPC specification	NTPC specification and NTPC approved data sheet	Inspection report		P	W	W	
		n LED driver: Surge protection compliance check	Major	Electrical	Per offered lot	Per offered Lot	NTPC specification	Certificate of compliance that surge protection is provided	Certificate of compliance		V	V	V	

LEGEND:/ संकेतिका: * RECORDS, INDENTIFIED WITH "TICK" (√) SHALL BE ESSENTIALLY INCLUDED BY SUPPLIER IN QA DOCUMENTATION. / * "टिक" (..) के साथ प्रमाणित रिकॉर्ड, क्यूए दस्तावेजीकरण में आपूर्तिकर्ता द्वारा अनिवार्य रूप से शामिल किया जाएगा।

** **M:** MANUFACTURER / SUB-SUPPLIER /निर्माता / उप-आपूर्तिकर्ता **C:** MAIN CONTRACTOR / मुख्य संविदाकार, **N**: NTPC/ एनटीपीसी **P:** PERFORM/ निष्पादन **W**: WITNESS/ गवाह AND **V:** VERIFICATION. AS APPROPRIATE/ सत्यापन (जैसा उपयुक्त हो), **CHP**/ सीएचपी: NTPC SHALL IDENTIFY IN COLUM "N" AS 'W'.: एनटीपीसी खंड "N" में **"W'** के रूप में करेगा ।

PACKING SPECIFICATIONS- LIGHTING FIXTURES, LAMPS & MISC. ITEMS
ANNEXURE-I

PACKING

1. The material shall be packed to ensure protection against damage during transit, storage for prolonged periods and handling.

2. Lighting Fixtures, Lamps, Receptacles, Switchboards, 24V Supply modules, 24V sockets, Junction Boxes, Exit signs shall be clean and dry prior to packaging.

3. All items specified at sl. No.2 above shall be supplied in packed cartons. The tapes used for packing shall not bleed, leave residue, or damage the item when removed.

4. Fixtures & other lighting material shall be wrapped in weather proof material such as polythene sheets, air bubble sheets/ thermocol etc. The lighting fixtures shall be placed in a corrugated paperboard/ fibreboard container/ mono carton.

5. The mono cartons shall be wrapped or bagged or tied in place in master cartons. The master carton shall be taped and then wrapped with cushioning material.

6. The dimensions of cartons shall be as per manufacturer's recommendations.

7. For items like step ladder, wheel mounted ladder and flexible conduits, packing shall be as per manufacturer standard.

Note: In case Manufacturer has a different packing standard which is equivalent or better same to be submitted for approval during contract stage.

Containers adequate for storing 100% of P.O. quantity material at site are to supplied. Vendor shall furnish suitable justification to purchaser during detailed engineering for the number and size of containers being supplied. Materials like Concrete Blocks of Paved surface required for installation and placing of container shall be made available by BHEL. Other supporting material like Rails etc. shall be part of Container only.

QUALITY PLAN OF LIGHTING DISTRIBUTION BOARDS & LIGHTING PANEL

एनटीपीसी NTPC	Item (material, class, grade, rating, range, size etc.) / मद (सामग्री, वर्ग, ग्रेड, रेटिंग, रेंज, आकार आदि): **LIGHTING PANEL & LIGHTING DISTRIBUTION BOARDS**	**STANDARD QUALITY PLAN** स्टैण्डर्ड क्वालिटी प्लान **CONFORMING TO CODE/ कोड के अनुरूप: NTPC TECHNICAL SPECIFICATION**	**TO BE FILLED IN BY NTPC** **QP NO.: 0000-999-QO E-S-034** क्यूपी सं.: 0000-999-क्यूओई – एस-034 **REV. NO/ संशोधित सं.: 01** **DATE :/तिथि: 06.09.2021** **VALID UPTO:05.09.2024**	**REVIEWED BY** **Aman Pandey** **S N TRIPATHI** SHAKTI NATH TRIPATHI **S K LAL** SUNIL KUMAR LAL	**APPROVED BY** अनुमोदित Approved **B C ROY**

SL. NO क्र.सं.	COMPONENT & OPERATIONS अवयव व संचालन		CHARACTERISTICS/ विशेषताएं	CLASS वर्ग	TYPE OF CHECK जांच के प्रकार	QUANTUM OF CHECK जांच के परिमाण M एम	C/ N सी/एन	REFERENCE DOCUMENT/ संदर्भ दस्तावेज़#	ACCEPTANCE NORMS/ स्वीकृत मानदंड	FORMAT OF RECORD/ रिकॉर्ड का प्रारूप	D*	AGENCY/ एजेंसी M एम	C सी	N एन	REMARKS/टिप्पणियां
1	2		3	4	5	6		7	8	9		**	10		11
1.0	Lighting Panels & Lighting Distribution Boards														
1.01	**Final**	a)	Overal Dimensions	Major	Measure	100%	One Panel/Type/ Lot	NTPC approved drg/data sheet	NTPC approved drg/data sheet	Insp report		P	W	W	
	Inspection and Testing	b)	Thickness of sheet	Major	Measure	"	-do-	-do-	-do-	-do-		P	W	W	
		c)	Paint shade	Major	Visual	100%	-do-	-do-	-do-	-do-		P	W	W	
		d)	Thickness of paint	Major	Measure	100% of items	Min. 5 points/panel	-do-	-do-	-do-		P	W	W	
		e)	Surface finish	Major	Visual	100%	-do-	Smooth without lump	Smooth without lump	-do-		P	W	W	
		f)	Adhesion Test	Major	Mech	One sample/ lot/size	One sample/ lot/size	Shouldnot peel off	Shouldnot peel off	-do-		P	W	W	
		g)	Name Plate	Major	Visual	100%	10% of each type	NTPC approved drawing/data sheet	NTPC approved drawing/data sheet	-do-		P	W	W	
		h)	Tightness of bus bar bolts	Major	Mech	100%	One Panel/Type/ Lot	Manufacturer's std	Manufacturer's std	-do-		P	W	W	
		i)	Bus Bar Clearance	Major	Measure	100%	-do-	NTPC approved drg/data sheet	NTPC approved drg/data sheet	-do-		P	W	W	

LEGEND/ संकेतक: * RECORDS, INDENTIFIED WITH "TICK" (-) SHALL BE ESSENTIALLY INCLUDED BY SUPPLIER IN QA DOCUMENTATION / * "टिक" (-) के साथ प्रमाणित रिकॉर्ड, क्यूए दस्तावेजीकरण में आपूर्तिकर्ता द्वारा अनिवार्य रूप से शामिल किया जाएगा
** M: MANUFACTURER / SUB-SUPPLIER /निर्माता / उप-आपूर्तिकर्ता C: MAIN CONTRACTOR / मुख्य संविदाकार, N: NTPC/ एनटीपीसी P: PERFORM/ निष्पादन W: WITNESS/ गवाह AND V: VERIFICATION. AS APPROPRIATE/ यथोचित (जैसा उपयुक्त हो), CHP/ सीएचपी:
NTPC SHALL IDENTIFY IN COLUM "N" AS 'W'.: एनटीपीसी खंड "N" में "W" के रूप में करेगा।

एनटीपीसी NTPC	Item (material, class, grade, rating, range, size etc.) / मद (सामग्री, वर्ग, ग्रेड, रेटिंग, रेंज, आकार आदि) **LIGHTING PANEL & LIGHTING DISTRIBUTION BOARDS**	**STANDARD QUALITY PLAN** स्टैण्डर्ड क्वालिटी प्लान CONFORMING TO CODE/ कोड के अनुरूप: NTPC TECHNICAL SPECIFICATION	TO BE FILLED IN BY NTPC QP NO.: 0000-999-QO E-S-034 क्यूपी सं.: 0000-999-क्यूओई – एस-034 REV. NO/ संशोधित सं.: 01 DATE /दिनांक: 06.09.2021 VALID UPTO: 05.09.2024	REVIEWED BY Aman Pandey S N TRIPATHI S K LAL	APPROVED BY B C ROY

SL. NO क्र.स.	COMPONENT & OPERATIONS अवयव व संचालन		CHARACTERISTICS/ विशेषताएं	CLASS वर्ग	TYPE OF CHECK जांच के प्रकार	QUANTUM OF CHECK जांच के परिमाण M एम	C/ N सी/एन	REFERENCE DOCUMENT/ संदर्भ दस्तावेज़	ACCEPTANCE NORMS/ स्वीकृत मानदंड	FORMAT OF RECORD/ रिकॉर्ड का प्रारूप	D*	AGENCY/ एजेंसी M एम	C सी	N एन	REMARKS/टिप्पणियां
1	2		3	4	5	6		7	8	9		**	10		11
		j)	GA& Bill of material	CR	Phy	100%	10% of each type	-do-	-do-	-do-		P	W	W	
		k)	Identification of Component lay out	Major	Visual	100%	One Panel/Type/ Lot	-do-	-do-	-do-		P	W	W	
		l)	Completeness of												
		i)	Wiring	Major	Elect	100%	-do-	-do-	-do-	-do-		P	W	W	
		ii)	Ferruling	"	Visual	100%	-do-	-do-	-do-	-do-		P	W	W	
		m)	Size of wires	"	Measure	100%	-do-	-do-	-do-	-do-		P	W	W	
		n)	Colour coding of busbar	Major	Visual	100%	-do-	-do-	-do-	-do-		P	W	W	
		o)	Spare terminals	"	Measure	100%	-do-	-do-	-do-	-do-		P	W	W	
		p)	Shrouding of Live Parts	Major	Visual	100%	-do-	-do-	-do-	-do-		P	W	W	
		q)	Door earthing	"	Megger	100%	-do-	-do-	-do-	-do-		P	W	W	
		r)	Functional Tests including HV, IR & continuity	CR	Elect	100%	-do-	-do-	-do-	-do-		P	W	W	
		s)	Degree of Protection (Paper Insertion Method)	CR	Phy	100%	One Panel/type/lot	NTPC approved drg/data sheet	NTPC approved drg/data sheet	QC Record		P	W	W	

LEGEND/ संकेताक्षर: * RECORDS, INDENTIFIED WITH "TICK" ( ) SHALL BE ESSENTIALLY INCLUDED BY SUPPLIER IN QA DOCUMENTATION / * "टिक" (..) के साथ पहचानित रिकॉर्ड, क्यूए दस्तावेजीकरण में आपूर्तिकर्ता द्वारा अनिवार्य रूप से शामिल किया जाएगा
** M: MANUFACTURER / SUB-SUPPLIER /निर्माता / उप-आपूर्तिकर्ता C: MAIN CONTRACTOR / मुख्य संविदाकार, N: NTPC/ एनटीपीसी P: PERFORM/ निष्पादन W: WITNESS/ गवाह AND V: VERIFICATION. AS APPROPRIATE/ आवश्यक (जैसा उपयुक्त हो), CHP/ सीएचपी: NTPC SHALL IDENTIFY IN COLUM "N" AS "W".: एनटीपीसी सदर "N" के "W" के रूप में करेगा।

Format No.: QS-01-QAI-P-07A/F3-R0
प्रारूप सं.

Engg. Div./QA&I
अभि. प्रभाग./क्यूए व आई

ANNEXURE 1 TO SQP NO. 0000 - 999 - QOE - S - 034 REV 01

Sl No.	Items	Make	Sl No.	Items	Make
1	Indicating Meters	Makes of BOIs shall be subject to NTPC approval/clearance	13	Wires	Makes of BOIs shall be subject to NTPC approval/clearance
2	Indicating lamp		14	Energy Meter	
3	Current Transformer				
4	Potential Transformer				
5	Dry Type Transformer				
6	Timer				
7	MCB/MCCB/ISOLATOR				
8	On-Off Switch/SFU				
9	Fuse/ELCB				
10	Push Button				
11	Contactor				
12	Terminal Block				

PACKING SPECIFICATION FOR DISTRIBUTION BOARDS PACKAGE (LIGHTING DISTRIBUTION BOARDS AND LIGHTING PANELS)

ANNEXURE-I

DISTRIBUTION BOARDS (LDB & LP) shall be despatched in "Crate Packing" using wood.

1.0 PREPARATION OF PACKING CASES:

1.1 **DIMENSIONS:**

1.1.1 Minimum number of planks shall be used for a shook.
1.1.2 Thickness of planks for Front, rear, top and bottom sides and binding, jointing battens shall be 25/20mm +2/-3 mm
1.1.3 Horizontal, vertical, diagonal planks shall be given for binding
1.1.4 Width of binding planks shall be minimum 100mm
1.1.5 Distance between any 2 binding planks shall be less than 750mm
1.1.6 Diagonal planks shall be used in between vertical binding planks when distance between inner to inner of vertical planks is more than 750mm
1.1.7 Distance of the outer edges of these planks from the edge of case shall be less than 250mm.
1.1.8 Diagonal planks are not required for top planks and width side, if the width of pallet is less than 750mm.

1.2 JOINTING OF PLANKS**:**

Single length planks shall be used for cubicles whose overall length is less than 2400 mm. For cubicles of length more than 2400 mm, jointing is permitted. The jointing shall be done with one single or maximum of 2 planks of wood same as other planks of width 250 mm (minimum) with two rows of nails on either side of the joint in zigzag manner. From the joint along height side, it shall be of lap joint with overlap of at least the width of plank.

1.3 PERMISSIBLE DEFECTS

Wood shall be free from knots, bows, visible sign of infection and any kind of decay caused by insects, fungus, etc.

End splits: Longest end splits at each end shall be measured and lengths added together. The added length shall not exceed 60mm per meter run of shook's. Wood pins shall be used to prevent further development of split.

Surface cracks: Surface cracks with a maximum depth of 3mm are permissible. A continuous crack of any depth all along the length is not allowed.

1.4 OTHER MATERIALS

1.4.1 NAILS

Nails of suitable dia and length shall be used for joining the planks.

1.4.2 BLUE NAILS

If applicable, these shall be used for nailing bituminized Kraft paper/hessian cloth to the planks.

1.4.3 HOOP IRON STRIPS
These are used for strapping the boxes. The material shall be free from rust. If sufficient nailing is done for bigger boxes, strapping need not be done.

1.4.4 CLIPS

These shall be used for strapping the hoop iron strips on the boxes.

1.4.5 BRACKETS

Brackets of suitable dimension shall be used for nailing to the corners of cubicle boxes. The brackets shall be of mild steel of suitable thickness. The brackets shall be of “L" shape. Two holes shall be provided towards the end of each side for screwing /nailing.

1.4.6 MULTI LAYERED CROSS LAMINATED POLYTHELENE FILM

Multi Layered Cross Laminated Polyethylene Film shall be used to make covers to the jobs individually. The cross lamination gives qualities of extra toughness, together with flexibility and lightness coupled with good weather resistance to ultra violet rays.

1.4.6 RUBBERISED COIR:

The rubberized coir is used as cushioning material. For the packing of loose items, items are to be arrested by using rubberized coir.

1.4.7 FASTENERS

Bolts, double nuts, spring washers will have to be used to hold the job to the bottom plank of the box so that there shall be no jerk on the DISTRIBUTION BOARDS (LDB & LP) during transit.

1.4.8 PACKING SLIP:

Packing slip kept in the polyethylene bag shall be placed in the box at appropriate place. In addition, one more packing slip covered in polyethylene cover and packing slip holder shall be nailed to front / rear of case.

1.4.9 MARKING PLATE:

Marking on the packing case shall be done as per the manufacturer standard.

QUALITY PLAN OF LIGHTING TRANSFORMER

	ITEM (MATERIAL, CLASS, GRADE, RATING, RANGE, SIZE ETC.) : मद (सामग्री, वर्ग, ग्रेड, रैंटिंग, रेंज, आकार आदि): DRY TYPE (LIGHTING) TRANSFORMER UP TO 100KVA 415/415V	STANDARD QUALITY PLAN स्टैण्डर्ड क्वालिटी प्लान	QP NO / क्यूपी सं..:	0000-999-QOE– S-039	REVIEWED BY: द्वारा समीक्षा की गई:	APPROVED BY: द्वारा अनुमोदित:
		CONFORMING TO CODE: कोड के अनुरूप: IS: 11171-1985 IS:11171-1985 & NTPC SPECIFICATION	REV NO / संशोधित सं..:	01	S.N. TRIPATHI	S. S. MISHRA
			DATE/ तिथि	30.08.2022	S.K. LAL	
			PAGE// पृष्ठ	Page 1 of 1		

SL. NO क्र.सं.	COMPONENT & OPERATIONS अवयव व संचालन	CHARACTERISTICS / विशेषताएं	CLASS वर्ग	TYPE OF CHECK जांच के प्रकार	QUANTUM OF CHECK जांच के परिमाण M एम	C/ N सी/एन	REFERENCE DOCUMENT संदर्भ दस्तावेज#	ACCEPTANCE NORMS/ स्वीकृत मानदंड	FORMAT OF RECORD/ रिकॉर्ड का प्रारूप		AGENCY/ एजेंसी M	C	N	REMARKS / टिप्पणियां
1.	2.	3.	4.	5.	6.		7.	8.	9.	D*	** 10			11
1.00	FINAL TEST: ROUTINE TEST	Rating Name Plate Verification	Major	Visual	100%	100%	IS-11171-1985	NTPC Appr. Drg. Data Sheet	TC		P	W	V	
		Overall Dimension	Major	Visual	100%	100%	IS-11171-1985	NTPC Appr. Drg	TC		P	W	V	Drg. For LDB Indicating Rating & GA Drg for LDB.
		Measurement of winding resistance	Major	Visual	100%	100%	IS-11171-1985	IS-11171/Mfr Std	TC	√	P	W	V	
		Measurement of Voltage ration and check of voltage vector relationship	Major	Visual	100%	100%	IS-11171-1985	NTPC appr Drg.	TC	√	P	W	V	
		Measurement of impedance of voltage (principal tapping), short circuit impedance and load loss	Major	Elect.	100%	100%	IS-11171-1985	IS-11171/Mfr Std	TC	√	P	W	V	
		Measurement of no - load loss and current	Major	Elect.	100%	100%	IS-11171-1985	IS-11171/Mfr Std	TC	√	P	W	V	
		Separate source voltage withstand test	Major	Elect.	100%	100%	IS-11171-1985	IS-11171	TC	√	P	W	V	
		Induced voltage withstand test	Major	Elect.	100%	100%	IS-11171-1985	IS-11171	TC	√	P	W	V	
2.00	Type Test	Review of Type Test clearance given by NTPC Project Engg.												
3.00	Pre-Dispatch	Completeness	Minor	Visual	100%		Mfr. Std	Mfr. Std			P	P	-	

LEGEND:/ संकेतिका: * RECORDS, INDENTIFIED WITH "TICK" (√) SHALL BE ESSENTIALLY INCLUDED BY SUPPLIER IN QA DOCUMENTATION./ * "टिक" (..) के साथ प्रमाणित रिकॉर्ड, क्यूए दस्तावेजीकरण में आपूर्तिकर्ता द्वारा अनिवार्य रूप से शामिल किया जाएगा।

** **M:** MANUFACTURER / SUB-SUPPLIER /निर्माता / उप-आपूर्तिकर्ता **C:** MAIN CONTRACTOR / मुख्य संविदाकार, **N**: NTPC/ एनटीपीसी **P:** PERFORM/ निष्पादन **W**: WITNESS/ गवाह AND **V:** VERIFICATION. AS APPROPRIATE/ सत्यापन (जैसा उपयुक्त हो), **CHP**/ सीएचपी: NTPC SHALL IDENTIFY IN COLUM "N" AS 'W'.: एनटीपीसी खंड "N" में **"W'** के रूप में करेगा ।

QUALITY PLAN OF LIGHTING POLES

STANDARD QUALITY PLAN

एनटीपीसी NTPC	**Item: - Lighting Pole (Octagonal /Polygonal))**	SQP NO:	CPG-QA-SQP-E-012		P **1/2**	Prepared GANPATI JHA (Ganpati Jha)	Approved SUNIL MALANI Digitally signed by SUNIL MALANI Date: 2022.08.09 14:47:37 +05'30' (Sunil Malani)
		Rev.	00	Date	09.08.2022		

SL. NO.	COMPONENT/ OPERATION	CHARACTERISTICS	QUANTUM OF CHECK		REFERENCE DOUMENT	ACCEPTANCE NORM	FORMAT OF RECORD	D	AGENCY		REMARKS
			M	N					M	N	
A)	***Raw Material / Bought Out Items Checks***										
1.0	Steel for Pole Shaft, bracket, base plate AND foundation bolt	a).Chemical Composition & Mechanical Properties	1	Minimum Sample/Lot/ Heat/Coil	Tender/PO Tech. specifications /NTPC approved Drg. / DS		TC / IR		P	V	
		b). Thickness	1	Minimum Sample/Lot/ Heat/Coil	Tender/PO Tech. specifications /NTPC approved Drg. / DS		TC / IR		P	V	
B)	***Process/Assembly check***										
1.0	Fabrication of pole, bracket, base plate	a). Dimensions, cross section	100 %	Min 1/ type	Tender/PO Tech. specifications /NTPC approved Drg. / DS		IR		P	-	
		b). Longitudinal Weld	100 %	Random	Tender/PO Tech. specifications /NTPC approved Drg. / DS		IR		P	-	
		c). Galvanisation: Thickness, uniformity of coating & adhesion	100 %	Random	Tender/PO Tech. specifications /NTPC approved Drg. / DS		TC / IR		P	-	
C)	***Finished product /Final inspection.***										
1.0	Pole, Bracket, Base Plate	a). Dimensions, cross section	100 %	Random with min 1 per type	Tender/PO Tech. specifications /NTPC approved Drg. / DS		TC / IR	Y	P	W	
		b). Longitudinal Weld / Welding	100 %		Tender/PO Tech. specifications /NTPC approved Drg. / DS		TC / IR		P	W	
		c). Galvanisation: Thickness, uniformity of coating & adhesion	100 %		Tender/PO Tech. specifications /NTPC approved Drg. / DS		TC / IR		P	W	
2.0	Pole	Straightness, Mass, Surface Finish	100%	1 per type from the offered lot	Tender/PO Tech. specifications /NTPC approved Drg. / DS		TC / IR	Y	P	W	
		Deflection test, Galvanisation checks (thickness, uniformity,	Min 1 per type		Tender/PO Tech. specifications /NTPC approved Drg. / DS		TC / IR	Y	P	W	

एनटीपीसी NTPC	**Item: - Lighting Pole (Octagonal /Polygonal))**	SQP NO:	CPG-QA-SQP-E-012		P **2/2**	Prepared	Approved
		Rev.	00	Date	09.08.2022	GANPATI JHA (Ganpati Jha)	(Sunil Malani)

SL. NO.	COMPONENT/ OPERATION	CHARACTERISTICS	QUANTUM OF CHECK		REFERENCE DOUMENT	ACCEPTANCE NORM	FORMAT OF RECORD	D	AGENCY		REMARKS
			M	N					M	N	
		mass of zinc, adhesion)									
3.0	Base Plate	Welding quality, dimensions, surface finish, galvanization checks (thickness, uniformity, mass of zinc, adhesion)	Min 1 per type	1 per type from the offered lot	Tender/PO Tech. specifications /NTPC approved Drg. / DS		TC / IR		P	W	
4.0	Luminaries / Lighting Fixtures / Cables-if applicable	Make, model	100 %	-	Tender/PO Tech. specifications /NTPC approved Drg. / DS		TC / IR		P		Note 4
		Routine & acceptance tests	IS 16103 / Note 3		Tender/PO Tech. specifications /NTPC approved Drg. / DS		TC / IR		P/V	V	

Notes :-

1. 'Y' mark in Column 'D' means such document shall be furnished by the manufacturer / supplier.
2. Calibrated equipments required for performing the tests in presence of NTPC or authorized representative, shall be arranged by the supplier without any extra cost.
3. Reference and Acceptance norms shall be derived from following in the same sequence a) NTPC Approved drawing / data sheet, b) NTPC tech specs c) Purchase Order, d) Relevant national standard, e) Relevant International standard, f) Manufacturer's standard. g) Good Engineering practices.
4. **Separate QP shall be followed for lighting fixtures if the total ordered quantity of lighting fixtures per type is more than 100.**
5. Witness by NTPC/authorized representative (wherever applicable) shall be on randomly chosen sample/s. NTPC shall review Mfrs test report for balance quantity.

Abbreviations: -

M	*Manufacturer*		*P*	*Perform*		*IR*	*Inspection Record / Report*
N	*NTPC Ltd or authorized representative*		*W*	*Witness*		*TC*	*Test Certificate*
CoC	*Certificate of Conformance*		*V*	*Verification of records*		*MTC*	*Manufacturer's Test Certificate*
Mfrr	*Manufacturer*		*Drg.*	*Drawing*		*DS*	*Datasheet*

SUB VENDOR LIST

ITEM CODE	ITEM/SERVICE DESCRIPTION	SL NO.	VENDOR CODE	VENDOR NAME	ADDRESS	PHONE	REMARKS
ES1	AC CONTACTORS	1	S01	SIEMENS	RC-IN I S NR DEL AREA, JIL BUILDING, TOWER-B, PLOT NO. 78, SECTOR 18, GURGAON-122015, INDIA	0124-2842000, 9873424331 amit.bhadauria@siemens.com	
	AC CONTACTORS	2	A35	GE-POWER	KAMAK TOWER, 3RD FLOOR, PLOT NO. 12-A, TVK INDUSTRIAL ESTATE, EKKADUTHANGAL, GUINDY, CHENNAI-600032	044-49681447	
	AC CONTACTORS	3	E1144	TELEMECHANIQUE/ SCHNEIDER ELECTRIC INDIA PVT. LTD.	9TH FLOOR, BLDG. NO. 10, TOWER-C, DLF CYBER CITY, PH-II, GURGAON-122002	0124-3940400	TAKEN OVER BY SCHNEIDER
	AC CONTACTORS	4	L01	LK (Formerly L&T)	Lauritz Knudsen Electrical & Automation A/600, SHIL – Mahape Road, TTC Industrial Area, MIDC Thane, Mumbai, Maharashtra 400710	Pranjal Tyagi, Pranjal.Tyagi@lk-ea.com, Mobile - 8976907537, Telephone: +91 22 69327800	
	AC CONTACTORS	5	B04	BCH	20/4, MATHURA ROAD, FARIDABAD, HARYANA-121006	0129-4293000	
ES2	AC LOAD BREAK SWITCH	1	A35	GE-POWER	KAMAK TOWER, 3RD FLOOR, PLOT NO. 12-A, TVK INDUSTRIAL ESTATE, EKKADUTHANGAL, GUINDY, CHENNAI-600032	044-49681447	
	AC LOAD BREAK SWITCH	2	L01	LK (Formerly L&T)	Lauritz Knudsen Electrical & Automation A/600, SHIL – Mahape Road, TTC Industrial Area, MIDC Thane, Mumbai, Maharashtra 400710	Pranjal Tyagi, Pranjal.Tyagi@lk-ea.com, Mobile - 8976907537, Telephone: +91 22 69327800	
	AC LOAD BREAK SWITCH	3	S01	SIEMENS	RC-IN I S NR DEL AREA, JIL BUILDING, TOWER-B, PLOT NO. 78, SECTOR 18, GURGAON-122015, INDIA	0124-2842000, 9873424331 amit.bhadauria@siemens.com	
	AC LOAD BREAK SWITCH	4	E1076	KAYCEE	KAYCEE INDUSTRIES LTD., C/O-CMS COMPUTERS LTD., 35A, REAR BLDG., KILOKARI, NEW DELH1-110014	Rajiv Sharma-9312004687	
	AC LOAD BREAK SWITCH	5	C01	C&S ELECTRIC LTD.	222, OKHLA IND. ESTATE, PH-III, NEW DELHI-110020	011-3088 7520-29	
ES3	AC MCCB	1	C01	C&S ELECTRIC LTD.	222, OKHLA IND. ESTATE, PH-III, NEW DELHI-110020	011-3088 7520-29	
	AC MCCB	2	S03	SCHNEIDER ELECTRIC INDIA PVT. LTD.	9TH FLOOR, BLDG. NO. 10, TOWER-C, DLF CYBER CITY, PH-II, GURGAON-122002	0124-3940400	
	AC MCCB	3	S01	SIEMENS	RC-IN I S NR DEL AREA, JIL BUILDING, TOWER-B, PLOT NO. 78, SECTOR 18, GURGAON-122015, INDIA	0124-2842000, 9873424331 amit.bhadauria@siemens.com	
	AC MCCB	4	A35	GE-POWER	KAMAK TOWER, 3RD FLOOR, PLOT NO. 12-A, TVK INDUSTRIAL ESTATE, EKKADUTHANGAL, GUINDY, CHENNAI-600032	044-49681447	
	AC MCCB	5	L01	LK (Formerly L&T)	Lauritz Knudsen Electrical & Automation A/600, SHIL – Mahape Road, TTC Industrial Area, MIDC Thane, Mumbai, Maharashtra 400710	Pranjal Tyagi, Pranjal.Tyagi@lk-ea.com, Mobile - 8976907537, Telephone: +91 22 69327800	
	AC MCCB	6	C02	CROMPTON GREAVES	RAIL TRANSPORTATION SYSTEMS,VANDANA BUILDING, 11, TOLSTOY MARG, TOLSTOY MARG, NEW DELHI, DL 110001	011 3041 6300	
ES4	ACDB/ DCDB DRAWOUT TYPE	1	EC05	ELECTRO CONTROLS & DEVICES	M/S ELECTRO CONTROLS & DEVICES, F-41, SITE-C, SURAJPUR INDUSTRIAL AREA GREATER NOIDA UTTAR PRADESH :201308	Mr. Sanjay Sharma (Chief Promoter) 0120-2569487, 2560100,2560300	
	ACDB/ DCDB DRAWOUT TYPE	2	KM1	KMG ATOZ SYSTEMS	C-49, SECTOR-81-NOIDA-201305	120-4207920, 08527897328	
	ACDB/ DCDB DRAWOUT TYPE	3	E1019	ASIATIC	A-58 NARAINA IND. AREA, PHASE-I , NEW DELHI 110028	011 - 25796330, 25796617	
	ACDB/ DCDB DRAWOUT TYPE	4	E05	UNILEC ENGINEERS PVT. LTD.	BEHRAMPUR INDUSTRIAL AREA, BEGAMPUR KHATOLA ROAD, GURGAON-122001	0124-4030247,248, 4559700, 9911087173	
	ACDB/ DCDB DRAWOUT TYPE	5	C01	C&S ELECTRIC LTD.	222, OKHLA IND. ESTATE, PH-III, NEW DELHI-110020	011-3088 7520-29	
	ACDB/ DCDB DRAWOUT TYPE	6	L01	LK (Formerly L&T)	Lauritz Knudsen Electrical & Automation A/600, SHIL – Mahape Road, TTC Industrial Area, MIDC Thane, Mumbai, Maharashtra 400710	Pranjal Tyagi, Pranjal.Tyagi@lk-ea.com, Mobile - 8976907537, Telephone: +91 22 69327800	
	ACDB/ DCDB DRAWOUT TYPE	7	A35	GE-POWER	KAMAK TOWER, 3RD FLOOR, PLOT NO. 12-A, TVK INDUSTRIAL ESTATE, EKKADUTHANGAL, GUINDY, CHENNAI-600032	044-49681447	
	ACDB/ DCDB DRAWOUT TYPE	8	S01	SIEMENS	RC-IN I S NR DEL AREA, JIL BUILDING, TOWER-B, PLOT NO. 78, SECTOR 18, GURGAON-122015, INDIA	0124-2842000, 9873424331 amit.bhadauria@siemens.com	
	ACDB/ DCDB FIXED TYPE	1	EC05	ELECTRO CONTROLS & DEVICES	M/S ELECTRO CONTROLS & DEVICES, F-41, SITE-C, SURAJPUR INDUSTRIAL AREA GREATER NOIDA UTTAR PRADESH :201309	Mr. Sanjay Sharma (Chief Promoter) 0120-2569487, 2560100,2560300	
	ACDB/ DCDB FIXED TYPE	2	J01	JASPER ENGNIREES PVT. LTD.	A-23, SECTOR - 8, NOIDA-201301	0120-4033520/533	
	ACDB/ DCDB FIXED TYPE	3	JC01	JACKSON ENGINNEERS	A-43, HOSEIRY COMPLEX, OPPOSITE NSEZ, NOIDA-201305	0120-4302600, 2568923,27	
	ACDB/ DCDB FIXED TYPE	4	S02	SPACEAGE SWITCHGEARS LTD.	68 & 13-A INDUSTRIAL DEVELOPMENT COLONY, MEHRAULI ROAD GURGAON, HARYANA-122001	0124-2302711, 4085091	
	ACDB/ DCDB FIXED TYPE	5	KM1	KMG ATOZ SYSTEMS	C-49, SECTOR-81-NOIDA-201305	120-4207920, 08527897328	

ITEM CODE	ITEM/SERVICE DESCRIPTION	SL NO.	VENDOR CODE	VENDOR NAME	ADDRESS	PHONE	REMARKS
ES5	ACDB/ DCDB FIXED TYPE	6	E1019	ASIATIC	A-58 NARAINA IND. AREA, PHASE-I , NEW DELHI 110028	011 - 25796330, 25796617	
	ACDB/ DCDB FIXED TYPE	7	E05	UNILEC ENGINEERS PVT. LTD.	BEHRAMPUR INDUSTRIAL AREA, BEGAMPUR KHATOLA ROAD, GURGAON-122001	0124-4030247,248, 4559700, 9911087173	
	ACDB/ DCDB FIXED TYPE	8	C01	C&S ELECTRIC LTD.	222, OKHLA IND. ESTATE, PH-III, NEW DELHI-110020	011-3088 7520-29	
	ACDB/ DCDB FIXED TYPE	9	E1210	ENPRO ENGG.	NO.995P, DIAMOND PLAZA, 2ND FLOOR, 12TH MAIN ROAD, ANNA NAGAR, CHENNAI-40	044 – 42611526 / 42170338 / 26262716	
	ACDB/ DCDB FIXED TYPE	10	A01	ASSOCIATED SWGR & PROJ. LTD.	C-10, UPSIDC, INDUSTRIAL AREA, SITE-IV, KASNA ROAD, GREATER NOIDA-201306	0120-4294618,19,20 Asplho@gmail.com	
	ACDB/ DCDB FIXED TYPE	11	B04	BCH	20/4, MATHURA ROAD, FARIDABAD, HARYANA-121006	0129-4293000	
	ACDB/ DCDB FIXED TYPE	12	E1043	ECS PRIVATE LTD	7/47, Site 2, Upsidc Ind Area, Loni Road, MOHAN Nagar, Ghaziabad, Uttar Pradesh 201007	098 10 217990	
	ACDB/ DCDB FIXED TYPE	13	L01	LK (Formerly L&T)	Lauritz Knudsen Electrical & Automation A/600, SHIL – Mahape Road, TTC Industrial Area, MIDC Thane, Mumbai, Maharashtra 400710	Pranjal Tyagi, Pranjal.Tyagi@lk-ea.com, Mobile - 8976907537, Telephone: +91 22 69327800	
	ACDB/ DCDB FIXED TYPE	14	A35	GE-POWER	KAMAK TOWER, 3RD FLOOR, PLOT NO. 12-A, TVK INDUSTRIAL ESTATE, EKKADUTHANGAL, GUINDY, CHENNAI-600032	044-49681447	
	ACDB/ DCDB FIXED TYPE	15	S01	SIEMENS	RC-IN I S NR DEL AREA, JIL BUILDING, TOWER-B, PLOT NO. 78, SECTOR 18, GURGAON-122015, INDIA	0124-2842000, 9873424331 amit.bhadauria@siemens.com	
	ACDB/ DCDB FIXED TYPE	16	E1080	KHOKHAR ELECT. PVT LTD.	C-44, SEC-63, NOIDA-201307	120- 654 5452	
	ACDB/ DCDB FIXED TYPE	17	VC01	VIDHYUT CONTROLS (INDIA) PVT. LTD.	M/S VIDHYUT CONTROL (I) PVT.LTD. D-12 & 13, SECTOR-17,KAVI NAGAR INDL.AREA,GHAZIABAD – 201002 (DELHI NCR) U.P. INDIA	0120-4186400, 0120-4186423, 8527005590(DK GUPTA)	
ES6	AIR CIRCUIT BREAKER	1	L01	LK (Formerly L&T)	Lauritz Knudsen Electrical & Automation A/600, SHIL – Mahape Road, TTC Industrial Area, MIDC Thane, Mumbai, Maharashtra 400710	Pranjal Tyagi, Pranjal.Tyagi@lk-ea.com, Mobile - 8976907537, Telephone: +91 22 69327800	
	AIR CIRCUIT BREAKER	2	S01	SIEMENS	RC-IN I S NR DEL AREA, JIL BUILDING, TOWER-B, PLOT NO. 78, SECTOR 18, GURGAON-122015,	0124-2842000, 9873424331 amit.bhadauria@siemens.com	
	AIR CIRCUIT BREAKER	3	A35	GE-POWER	KAMAK TOWER, 3RD FLOOR, PLOT NO. 12-A, TVK INDUSTRIAL ESTATE, EKKADUTHANGAL, GUINDY, CHENNAI-600032	044-49681447	
	AIR CIRCUIT BREAKER	4	S03	SCHNEIDER ELECTRIC INDIA PVT. LTD.	9TH FLOOR, BLDG. NO. 10, TOWER-C, DLF CYBER CITY, PH-II, GURGAON-122002	0124-3940400	
	AIR CIRCUIT BREAKER	5	C01	C&S ELECTRIC LTD.	222, OKHLA IND. ESTATE, PH-III, NEW DELHI-110020	011-3088 7520-29	
ES7	AUXILIARY RELAYS	1	A24	ABB	14, MATHURA ROAD, FARIDABAD, HARYANA-121003	0129-2567580, 09871799449	
	AUXILIARY RELAYS	2	G01	ALSTOM LTD	A-7, SEC-65, NOIDA	0120-479 0000	
	AUXILIARY RELAYS	3	E1075	JYOTI LTD.	JYOTI LIMITED, E&CS DIVISION,3/15, BIDC, GORWA,VADODARA - 390 016, E-MAIL ID: ECS@JYOTI.COM	Ph. No.:+91-265-2281214 , Fax No.:+91-265-2281214	
	AUXILIARY RELAYS	4	E1099	OEN INDIA LTD	29/1479, VYTILLA, COCHIN - 682 019 KERALA, INDIA	Phone : +91 484 2301132, 2303709 Fax : +91 484 2302287, 2302221 sales@oenindia.com	
	AUXILIARY RELAYS	5	S01	SIEMENS	RC-IN I S NR DEL AREA, JIL BUILDING, TOWER-B, PLOT NO. 78, SECTOR 18, GURGAON-122015, INDIA	0124-2842000, 9873424331 amit.bhadauria@siemens.com	
ES8	BIMETAL RELAYS	1	L01	LK (Formerly L&T)	Lauritz Knudsen Electrical & Automation A/600, SHIL – Mahape Road, TTC Industrial Area, MIDC Thane, Mumbai, Maharashtra 400710	Pranjal Tyagi, Pranjal.Tyagi@lk-ea.com, Mobile - 8976907537, Telephone: +91 22 69327800	
	BIMETAL RELAYS	2	A35	GE-POWER	KAMAK TOWER, 3RD FLOOR, PLOT NO. 12-A, TVK INDUSTRIAL ESTATE, EKKADUTHANGAL, GUINDY, CHENNAI-600032	044-49681447	
	BIMETAL RELAYS	3	S01	SIEMENS	RC-IN I S NR DEL AREA, JIL BUILDING, TOWER-B, PLOT NO. 78, SECTOR 18, GURGAON-122015, INDIA	0124-2842000, 9873424331 amit.bhadauria@siemens.com	
	BIMETAL RELAYS	4	E1144	TELEMECHANIQUE/ SCHNEIDER ELECTRIC INDIA PVT. LTD.	9TH FLOOR, BLDG. NO. 10, TOWER-C, DLF CYBER CITY, PH-II, GURGAON-122002	0124-3940400	TAKEN OVER BY SCHNEIDER
ES9	BUCHHOLZ RELAY	1	G01	ALSTOM LTD	A-7, SEC-65, NOIDA	0120-479 0000	
	BUCHHOLZ RELAY	2	E1020	ATVUS INDUSTRIES	689, BLOCK 'O', NEW ALIPORE, CALCUTTA-700053	(91)-(33)-24001101 / 9885 sales@atvus.in	
	BUCHHOLZ RELAY	3	E1070	INSTRUMENTS & CONTROLS	146,GIDC IND.ESTATE,MAKARPURA, VADODRA-390010	0265-2642729	
ES10	CABLE CLAMPS & CABLE TIES	1	E1045	ELECTROMAC IND.CORPN.	27/28 AF,NEW EMPIRE IND.ESTT., R.KRISHNA MANDIR RD.JB NGR ,ANDHERI(E), MUMBAI-400059	91-22-28324829 / 66919034/ Mr. Devang Patel/ 91-9867074600 devang@electromacglands.com	
	CABLE CLAMPS & CABLE TIES	2	I01	INCAB	HARE STREET,KOLKATA,WEST BENGAL-700001	91-33-2480161/62/63/64 Fax : 91-33-2485766	
	CABLE CLAMPS & CABLE TIES	3	N05	NOVOFLEX MARKETING PVT. LTD.	RAIKVA' - 5TH FLOOR, UNIT-6 3A, RAM MOHAN MULLICK GARDEN LANE KOLKATA - 700 010	Phone: +91 33 2372 0088 Email: sales@novoflex.co.in, novoflexcal@vsnl.net	

ITEM CODE	ITEM/SERVICE DESCRIPTION	SL NO.	VENDOR CODE	VENDOR NAME	ADDRESS	PHONE	REMARKS
ES11	CABLE GLANDS	1	E1201	ALLIED TRADERS & EXPORTERS	C-124 A, SECTOR-2, NOIDA -201 301, UTTAR PRADESH, INDIA	Mr. Vijay Mohan Sood +(91)-(120)-2525694 +(91)-(120)-3052594 +(91)-(11)-23287156 vijay_mohansood@yahoo.com	
	CABLE GLANDS	2	E1017	ARUP ENGG & FOUNDARY WORKS	391/119,PRINCE ANWAR SHAH ROAD, CALCUTTA-700068	033 2473 0850	
	CABLE GLANDS	3	E1206	BALIGA LIGHTING EQPT.PVT.LTD.	63A,CP RAMASWAMY ROAD, ALWARPET,P.B.No 6910, CHENNAI-600018	44-24995505,22680990-4	
	CABLE GLANDS	4	E1036	COMMET BRASS PRODUCTS	NUTAN CHEMICAL COMPOUND, WALBHAT ROAD, GOREGAON, MUMBAI-400063	91-022-26852961/62/63 comet@vsnl.net	
	CABLE GLANDS	5	DW08	DOWELLS	M/S. DOWELLS ELECTRICALS 47/47A, SATGURU INDUSTRIAL ESTATE. OFF AAREY ROAD, GOREGOAN (EAST). MUMBAI 400 063.	CEO : Mr. Jayantibhai S. Patel TEL: 022-32504770./022-29270876/ 022-29270878.	
	CABLE GLANDS	6	E1044	ELECTROMAC INDUSTRIES	27/28AF NEW EMPIRE IND.ESTT., R.KRISHNA MANDIR RD.JB NGR ,ANDHERI(E),MUMBAI-400059	91-22-28324829 / 66919034 devang@electromacglands.com	
	CABLE GLANDS	7	I01	INCAB	HARE STREET,KOLKATA,WEST BENGAL-700001	91-33-2480161/62/63/64 Fax : 91-33-2485766	
ES12	CABLE LUGS	1	E1040	DOWELLS	M/S. DOWELLS ELECTRICALS 47/47A, SATGURU INDUSTRIAL ESTATE. OFF AAREY ROAD, GOREGOAN (EAST).	CEO : Mr. Jayantibhai S. Patel TEL: 022-32504770./022-29270876/	
	CABLE LUGS	2	E1149	UNIVERSAL MACHINES LTD.	4,B.B.D.BAG (EAST) 90,STEPHEN HOUSE,5TH FLR CALCUTTA-700001	033 2282 2540	
ES13	D.C. MCCB	1	C02	CROMPTON GREAVES	RAIL TRANSPORTATION SYSTEMS,VANDANA BUILDING, 11, TOLSTOY MARG, TOLSTOY MARG, NEW DELHI, DL 110001	011 3041 6300	
	D.C. MCCB	2	L01	LK (Formerly L&T)	Lauritz Knudsen Electrical & Automation A/600, SHIL – Mahape Road, TTC Industrial	Pranjal Tyagi, Pranjal.Tyagi@lk-ea.com, Mobile - 8976907537,	
	D.C. MCCB	3	A35	GE-POWER	KAMAK TOWER, 3RD FLOOR, PLOT NO. 12-A, TVK INDUSTRIAL ESTATE, EKKADUTHANGAL,	044-49681447	
	D.C. MCCB	4	S01	SIEMENS	RC-IN I S NR DEL AREA, JIL BUILDING, TOWER-B, PLOT NO. 78, SECTOR 18, GURGAON-122015, INDIA	0124-2842000, 9873424331 amit.bhadauria@siemens.com	
ES14	EARTH LEAKAGE CB	1	L01	LK (Formerly L&T)	Lauritz Knudsen Electrical & Automation A/600, SHIL – Mahape Road, TTC Industrial Area, MIDC Thane, Mumbai, Maharashtra 400710	Pranjal Tyagi, Pranjal.Tyagi@lk-ea.com, Mobile - 8976907537, Telephone: +91 22 69327800	
	EARTH LEAKAGE CB	2	S01	SIEMENS	RC-IN I S NR DEL AREA, JIL BUILDING, TOWER-B, PLOT NO. 78, SECTOR 18, GURGAON-122015, INDIA	0124-2842000, 9873424331 amit.bhadauria@siemens.com	
	EARTH LEAKAGE CB	3	A35	GE-POWER	KAMAK TOWER, 3RD FLOOR, PLOT NO. 12-A, TVK INDUSTRIAL ESTATE, EKKADUTHANGAL, GUINDY, CHENNAI-600032	044-49681447	
	EARTH LEAKAGE CB	4	S03	SCHNEIDER ELECTRIC INDIA PVT. LTD.	9TH FLOOR, BLDG. NO. 10, TOWER-C, DLF CYBER CITY, PH-II, GURGAON-122002	0124-3940400	
	EARTH LEAKAGE CB	5	C01	C&S ELECTRIC LTD.	222, OKHLA IND. ESTATE, PH-III, NEW DELHI-110020	011-3088 7520-29	
	EARTH LEAKAGE CB	6	A24	ABB	14, MATHURA ROAD, FARIDABAD, HARYANA-121003	0129-2567580, 09871799449	
	EARTH LEAKAGE CB	7	E1068	INDO ASIAN	B-24, PHASE - II , NOIDA - 201305, U.P.	120-3042222	
	EARTH LEAKAGE CB	8	E1088	MDS SWITCHGEAR LTD	314-317SHAH NAHAR ESTATE	011 - 25793021	
	EARTH LEAKAGE CB	9	E1120	S&S POWER SWITCHGEAR LTD,	NEW NO. 67, OLD NO. 19, DR. RANGA ROAD, MYLAPORE, CHENNAI - 600004	044 - 24988056, 044 - 24988057, 044 - 24988058	
ES15	JELLY FILLED CABLES	1	D01	DELTON SALES LTD.	DELTON HOUSE 4801,BHARAT RAM ROAD,24DARYAGANJ N.DELHI-110002	3273905-8,3262517	
	JELLY FILLED CABLES	2	H01	HINDUSTAN CABLES	A-40 ASIAN GAMES VILLAGE RANJIT SINGH BLOCK NEW DELHI-110049	011-26493673	
	JELLY FILLED CABLES	3	E1096	TELELINK-NICCO	NICCO HOUSE 2,HARE STREET,CALCUTTA-700001	91-033-66285000	
	JELLY FILLED CABLES	4	E1151	USHA BELTRON LTD.	TATISILWAI , ranchi- 835105	91 651 415 897, 415 816	
ES16	GI CONDUITS	BIS APPROVED MAKE					
ES17	GI CONDUIT (EPOXY PAINTED)	BIS APPROVED MAKE					
ES18	FLEXIBLE CONDUITS (LEAD COATED)	1	P03	PLICA INDIA PVT. LTD.	V.P.AGARWAL MANAGING DIRECTOR, PLICA INDIA PVT. LTD. 149, MODEL TOWN EAST GHAZIABAD - 201009	M - 9810052131 / 0120-4563979 / 9810557567 Mail: agr@plicaindia.com	
ES19	FLEXIBLE CONDUIT (PVC COATED)	REPUTED MAKE					
ES20	DC CONTACTORS	1	S03	SCHNEIDER ELECTRIC INDIA PVT. LTD.	9TH FLOOR, BLDG. NO. 10, TOWER-C, DLF CYBER CITY, PH-II, GURGAON-122002	0124-3940400	
	DC CONTACTORS	2	E1030	BHEL (BHOPAL)	HEAVY ELECTRICAL PLANT		
	DC CONTACTORS	3	E1044	ELECTROMAC INDUSTRIES	27/28AF NEW EMPIRE IND.ESTT., R.KRISHNA MANDIR RD.JB NGR ,ANDHERI(E),MUMBAI-400059	91-22-28324829 / 66919034 devang@electromacglands.com	
	DC CONTACTORS	4	L01	LK (Formerly L&T)	Lauritz Knudsen Electrical & Automation A/600, SHIL – Mahape Road, TTC Industrial Area, MIDC Thane, Mumbai, Maharashtra 400710	Pranjal Tyagi, Pranjal.Tyagi@lk-ea.com, Mobile - 8976907537, Telephone: +91 22 69327800	

ITEM CODE	ITEM/SERVICE DESCRIPTION	SL NO.	VENDOR CODE	VENDOR NAME	ADDRESS	PHONE	REMARKS
	DC CONTACTORS	5	S01	SIEMENS	RC-IN I S NR DEL AREA, JIL BUILDING, TOWER-B, PLOT NO. 78, SECTOR 18, GURGAON-122015, INDIA	0124-2842000, 9873424331 amit.bhadauria@siemens.com	
	DC CONTACTORS	6	E1144	TELEMECHANIQUE/ SCHNEIDER ELECTRIC INDIA PVT. LTD.	9TH FLOOR, BLDG. NO. 10, TOWER-C, DLF CYBER CITY, PH-II, GURGAON-122002	0124-3940400	TAKEN OVER BY SCHNEIDER
	DC CONTACTORS	7	A35	GE-POWER	KAMAK TOWER, 3RD FLOOR, PLOT NO. 12-A, TVK INDUSTRIAL ESTATE, EKKADUTHANGAL, GUINDY, CHENNAI-600032	044-49681447	
	CONTROL SWITCHES/ SELECTOR SWITCH	1	E1076	KAYCEE	KAYCEE INDUSTRIES LTD., C/O-CMS COMPUTERS LTD., 35A, REAR BLDG., KILOKARI, NEW DELH1-110014	Rajiv Sharma-9312004687	
	CONTROL SWITCHES/ SELECTOR SWITCH	2	A35	GE-POWER	KAMAK TOWER, 3RD FLOOR, PLOT NO. 12-A, TVK INDUSTRIAL ESTATE, EKKADUTHANGAL, GUINDY, CHENNAI-600032	044-49681447	
ES21	CONTROL SWITCHES/ SELECTOR SWITCH	3	G01	ALSTOM LTD	A-7, SEC-65, NOIDA	0120-479000	
	CONTROL SWITCHES/ SELECTOR SWITCH	4	S03	SCHNEIDER ELECTRIC INDIA PVT. LTD.	9TH FLOOR, BLDG. NO. 10, TOWER-C, DLF CYBER CITY, PH-II, GURGAON-122002	0124-3940400	
	CONTROL SWITCHES/ SELECTOR SWITCH	5	SRC01	M/s Shrenik & Co.	39A/3, PANCHRATNA INDUSTRIAL ESTATE, SARKHEJ-BAVLA ROAD, CHANGODAR,		
	CONTROL SWITCHES/ SELECTOR SWITCH	6	RE05	RECOM PVT. LTD.	M/S RECOM PVT. LTD.,16A , 2ND FLOOR A, WING RAJ INDUSTRIAL COMPLEX, MILITARY	Mr. Chandrashekar Kamath (MD) : 09820249503	
	CONTROL TRANSFORMER/ WINDING HEATING TRANSFORMER	1	E1009	AUTOMATIC ELECTRIC LTD.	96 AB LONAVLA INDUSTRIAL ESTATE NANGARGAON, LONAVLA-410401	Phone : +91 2114323665 Fax : +91 2114273482	
	CONTROL TRANSFORMER/ WINDING HEATING TRANSFORMER	2	E1066	INDCOIL	PLOT NO. A- 150/ 151, 23RD U ROAD, WAGLE ESTATE, THANE WEST, CST RD, FRIENDS COLONY, HALLOW PUL, KURLA WEST, MUMBAI, MAHARASHTRA 400070	Phone:022 2583 8305	
	CONTROL TRANSFORMER/ WINDING HEATING TRANSFORMER	3	K18	KAPPA ELECTRICALS	KAPPA ELECTRICALS, KAPPA CONSOLIDATED PVT. LTD., 14, CART TRACK ROAD, MADUVANKARAI, CHENNAI - 600 042, INDIA.	PHONE: +91 - 44 - 22454709, 22454516, 22450794, 22450795 FAX: +91 - 44 - 22351662, 22451693 E-MAIL: mira@kappaelectricals.com sales@kappaelectricals.com	
ES22	CONTROL TRANSFORMER/ WINDING HEATING TRANSFORMER	4	E1082	LOGICSTAT	B-160, INDUSTRIAL AREA, C BLOCK RD, OKHLA I, OKHLA INDUSTRIAL AREA, NEW DELHI, DL 110020	011 2681 0032	
	CONTROL TRANSFORMER/ WINDING HEATING TRANSFORMER	5	E1106	PRECISE ELECTRICALS	47A-49A,CHAKALA ROAD ANDHERI(E),MUMBAI-99 MUMBAI, MAHARASHTRA, INDIA PIN-400 099	022-8323402 / 022-8216433	
	CONTROL TRANSFORMER/ WINDING HEATING TRANSFORMER	6	E1128	UNILEC ENGINEERS PVT. LTD.	PLOT NO: R-247, T.T.C. INDUSTRIAL AREA, M.I.D.C , RABALE, NAVI MUMBAI- 400 701 INDIA	+91-22- 27607787 / 27607927 +91-22- 27607997	
	CONTROL TRANSFORMER/ WINDING HEATING TRANSFORMER	7	NK09	M/s Newtek Electricals	M-90, M.I.D.C, Waluj, Aurangabad 431136, Maharashtra, India	Tel/Fax: +91 240 2551555 E-mail: mkt.north@newtekelectricals.com, sales@newtekelectricals.com Mr Sanjeev Aggarwal (9958897890)	FOR CONTROL TRANSFORMER ONLY
	LT- CURRENT TRANSFORMER	1	S01	SIEMENS	RC-IN I S NR DEL AREA, JIL BUILDING, TOWER-B, PLOT NO. 78, SECTOR 18, GURGAON-122015, INDIA	0124-2842000, 9873424331 amit.bhadauria@siemens.com	
	LT- CURRENT TRANSFORMER	2	E1009	AUTOMATIC ELECTRIC LTD.	96 AB LONAVLA INDUSTRIAL ESTATE NANGARGAON, LONAVLA-410401	Phone : +91 2114323665 Fax : +91 2114273482	
	LT- CURRENT TRANSFORMER	3	E1066	INDCOIL	PLOT NO. A- 150/ 151, 23RD U ROAD, WAGLE ESTATE, THANE WEST, CST RD, FRIENDS COLONY, HALLOW PUL, KURLA WEST, MUMBAI, MAHARASHTRA 400070	Phone:022 2583 8305	
	LT- CURRENT TRANSFORMER	4	K18	KAPPA ELECTRICALS	KAPPA ELECTRICALS, KAPPA CONSOLIDATED PVT. LTD., SOUTHERN ELECTRIKS 14, CART TRACK ROAD, MADUVANKARAI, CHENNAI - 600 042, INDIA.	PHONE: +91 - 44 - 22454709, 22454516, 22450794, 22450795 FAX: +91 - 44 - 22351662, 22451693 E-MAIL: mira@kappaelectricals.com sales@kappaelectricals.com	
	LT- CURRENT TRANSFORMER	5	E1104	PRAGATI ELECTRICALS	280/3,II POKHRAN RD	5341779,5427041	
ES23	LT- CURRENT TRANSFORMER	6	E1106	PRECISE ELECTRICALS	47A-49A,CHAKALA ROAD ANDHERI(E),MUMBAI-99 MUMBAI, MAHARASHTRA, INDIA PIN-400 099	022-8323402 / 022-8216433	
	LT- CURRENT TRANSFORMER	7	E1128	SILKAANS ELECT.MFG.CO.PVT.LTD	PLOT NO: R-247, T.T.C. INDUSTRIAL AREA, M.I.D.C , RABALE, NAVI MUMBAI- 400 701 INDIA	+91-22- 27607787 / 27607927 +91-22- 27607997	
	LT- CURRENT TRANSFORMER	8	E1111	PRAYOG ELECTRICALS PVT. LTD.	GROUND FLOOR, THAKORE INDUSTRIAL COMPUND, STATION ROAD, VIDYA VIHAR (W), NATHANI ROAD , OPP. AMIBIKA TEMPLE,MUMBAI Mumbai - 400086, Maharashtra, India	91-22-25164288/25133146 Mr. P. U. PATWARDHAN (MANAGING DIRECTOR)	
	LT- CURRENT TRANSFORMER	9	C01	C&S ELECTRIC LTD.	222, OKHLA IND. ESTATE, PH-III, NEW DELHI-110020	011-3088 7520-29	

ITEM CODE	ITEM/SERVICE DESCRIPTION	SL NO.	VENDOR CODE	VENDOR NAME	ADDRESS	PHONE	REMARKS
	LT- CURRENT TRANSFORMER	10	NK09	M/s Newtek Electricals	M-90, M.I.D.C, Waluj, Aurangabad 431136, Maharashtra, India	Tel/Fax: +91 240 2551555 E-mail: mkt.north@newtekelectricals.com, sales@newtekelectricals.com Mr Sanjeev Aggarwal (9958897890)	
ES24	LT- POTENTIAL TRANSFORMER	1	S01	SIEMENS	RC-IN I S NR DEL AREA, JIL BUILDING, TOWER-B, PLOT NO. 78, SECTOR 18, GURGAON-122015, INDIA	0124-2842000, 9873424331 amit.bhadauria@siemens.com	
	LT- POTENTIAL TRANSFORMER	2	E1009	AUTOMATIC ELECTRIC LTD.	96 AB LONAVLA INDUSTRIAL ESTATE NANGARGAON, LONAVLA-410401	Phone : +91 2114323665 Fax : +91 2114273482	
	LT- POTENTIAL TRANSFORMER	3	E1066	INDCOIL	PLOT NO. A- 150/ 151, 23RD U ROAD, WAGLE ESTATE, THANE WEST, CST RD, FRIENDS COLONY, HALLOW PUL, KURLA WEST, MUMBAI, MAHARASHTRA 400070	Phone:022 2583 8305	
	LT- POTENTIAL TRANSFORMER	4	K18	KAPPA ELECTRICALS	KAPPA ELECTRICALS, KAPPA CONSOLIDATED PVT. LTD., SOUTHERN ELECTRIKS 14, CART TRACK ROAD, MADUVANKARAI, CHENNAI - 600 042, INDIA.	PHONE: +91 - 44 - 22454709, 22454516, 22450794, 22450795 FAX: +91 - 44 - 22351662, 22451693 E-MAIL: mira@kappaelectricals.com sales@kappaelectricals.com	
	LT- POTENTIAL TRANSFORMER	5	E1104	PRAGATI ELECTRICALS	280/3,II POKHRAN RD	5341779,5427041	
	LT- POTENTIAL TRANSFORMER	6	E1106	PRECISE ELECTRICALS	47A-49A,CHAKALA ROAD ANDHERI(E),MUMBAI-99 MUMBAI, MAHARASHTRA, INDIA PIN-400 099	022-8323402 / 022-8216433	
	LT- POTENTIAL TRANSFORMER	7	E1128	SILKAANS ELECT.MFG.CO.PVT.LTD	PLOT NO: R-247, T.T.C. INDUSTRIAL AREA, M.I.D.C , RABALE, NAVI MUMBAI- 400 701 INDIA	+91-22- 27607787 / 27607927 +91-22- 27607997	
	LT- POTENTIAL TRANSFORMER	8	E1111	PRAYOG ELECTRICALS PVT. LTD.	GROUND FLOOR, THAKORE INDUSTRIAL COMPUND, STATION ROAD, VIDYA VIHAR (W), NATHANI ROAD , OPP. AMIBIKA TEMPLE,MUMBAI Mumbai - 400086, Maharashtra, India	91-22-25164288/25133146 Mr. P. U. PATWARDHAN (MANAGING DIRECTOR)	
	LT- POTENTIAL TRANSFORMER	9	NK09	M/s Newtek Electricals	M-90, M.I.D.C, Waluj, Aurangabad 431136, Maharashtra, India	Tel/Fax: +91 240 2551555 E-mail: mkt.north@newtekelectricals.com, sales@newtekelectricals.com Mr Sanjeev Aggarwal (9958897890)	
ES25	DC SWITCH	1	A35	GE-POWER	KAMAK TOWER, 3RD FLOOR, PLOT NO. 12-A, TVK INDUSTRIAL ESTATE, EKKADUTHANGAL, GUINDY, CHENNAI-600032	044-49681447	
	DC SWITCH	2	E1076	KAYCEE	KAYCEE INDUSTRIES LTD., C/O-CMS COMPUTERS LTD., 35A, REAR BLDG., KILOKARI, NEW DELH1-110014	Rajiv Sharma-9312004687	
	DC SWITCH	3	S01	SIEMENS	RC-IN I S NR DEL AREA, JIL BUILDING, TOWER-B, PLOT NO. 78, SECTOR 18, GURGAON-122015, INDIA	0124-2842000, 9873424331 amit.bhadauria@siemens.com	
ES26	DISTRIBUTION BOX	1	SRC01	M/S SHRENIK & CO.	39A/3, PANCHRATNA INDUSTRIAL ESTATE, SARKHEJ-BAVLA ROAD, CHANGODAR, AHMEDABAD – 382 213		
ES27	EMER. PORTABLE LTG. SET	1	B05	BAJAJ ELECTRICALS	BAJAJ ELECTRICALS LTD. ENGINEERING & PROJECTS BU (NORTH) 3rd FLOOR, GULMOHARHOUSE, COMMUNITY CENTRE 161/B-4, GAUTAM NAGAR, YUSUF SARAI NEW DELHI – 110049	CONTACT PERSON : Mr. S. SREEMANY. SR. MANAGER (PROJECTS) CONTACT DETAILS : (+91) 9871025705. MAIL ID : srabans@bajajelectricals.com;	
	EMER. PORTABLE LTG. SET	2	B05	BAJAJ ELECTRICALS	BAJAJ ELECTRICALS LTD. ENGINEERING & PROJECTS BU (NORTH) 3rd FLOOR, GULMOHARHOUSE, COMMUNITY CENTRE 161/B-4, GAUTAM NAGAR, YUSUF SARAI NEW DELHI – 110049	SREEMANY. SR. MANAGER (PROJECTS) CONTACT DETAILS : (+91) 9871025705. MAIL ID : srabans@bajajelectricals.com;	
ES28	FUSE BASE	1	E1068	INDO ASIAN	B-24, PHASE - II , NOIDA - 201305, U.P.	120-3042222	
	FUSE BASE	2	G01	GE-POWER	KAMAK TOWER, 3RD FLOOR, PLOT NO. 12-A, TVK INDUSTRIAL ESTATE, EKKADUTHANGAL, GUINDY, CHENNAI-600032	044-49681447	
	FUSE BASE	3	L01	LK (Formerly L&T)	Lauritz Knudsen Electrical & Automation A/600, SHIL – Mahape Road, TTC Industrial Area, MIDC Thane, Mumbai, Maharashtra	Pranjal Tyagi, Pranjal.Tyagi@lk-ea.com, Mobile - 8976907537, Telephone: +91 22 69327800	
	FUSE BASE	4	C01	C&S ELECTRIC LTD.	222, OKHLA IND. ESTATE, PH-III, NEW DELHI-110020	011-3088 7520-29	
	FUSE BASE	5	S01	SIEMENS	RC-IN I S NR DEL AREA, JIL BUILDING, TOWER-B, PLOT NO. 78, SECTOR 18, GURGAON-122015, INDIA	0124-2842000, 9873424331 ;amit.bhadauria@siemens.com	
	FUSE BASE	6	A24	ABB	14, MATHURA ROAD, FARIDABAD, HARYANA-121003	0129-2567580, 09871799449	
	FUSE BASE	7	S02	SPACEAGE SWITCHGEARS LTD.	68 & 13-A INDUSTRIAL DEVELOPMENT COLONY, MEHRAULI ROAD GURGAON, HARYANA-122001	0124-2302711, 4085091	

ITEM CODE	ITEM/SERVICE DESCRIPTION	SL NO.	VENDOR CODE	VENDOR NAME	ADDRESS	PHONE	REMARKS
	FUSE BASE	8	S03	SCHNEIDER ELECTRIC INDIA PVT. LTD.	9TH FLOOR, BLDG. NO. 10, TOWER-C, DLF CYBER CITY, PH-II, GURGAON-122002	0124-3940400	
	FUSE BASE	9	G01	ALSTOM LTD	A-7, SEC-65, NOIDA	0120-479 0000	
	FUSE BASE	10	E1050	ESSEN DEINKI	FLAT NO. 502, SKYLINE HOUSE 85, NEHRU PLACE NEW DELHI	011-26217060	
ES29	HRC FUSES	1	E1068	INDO ASIAN	B-24, PHASE - II , NOIDA - 201305, U.P.	120-3042222	
	HRC FUSES	2	G01	GE-POWER	KAMAK TOWER, 3RD FLOOR, PLOT NO. 12-A, TVK INDUSTRIAL ESTATE, EKKADUTHANGAL, GUINDY, CHENNAI-600032	044-49681447	
	HRC FUSES	3	L01	LK (Formerly L&T)	Lauritz Knudsen Electrical & Automation A/600, SHIL – Mahape Road, TTC Industrial Area, MIDC Thane, Mumbai, Maharashtra 400710	Pranjal Tyagi, Pranjal.Tyagi@lk-ea.com, Mobile - 8976907537, Telephone: +91 22 69327800	
	HRC FUSES	4	C01	C&S ELECTRIC LTD.	222, OKHLA IND. ESTATE, PH-III, NEW DELHI-110020	011-3088 7520-29	
	HRC FUSES	5	S01	SIEMENS	RC-IN I S NR DEL AREA, JIL BUILDING, TOWER-B, PLOT NO. 78, SECTOR 18, GURGAON-122015, INDIA	0124-2842000, 9873424331 ;amit.bhadauria@siemens.com	
	HRC FUSES	6	A24	ABB	14, MATHURA ROAD, FARIDABAD, HARYANA-121003	0129-2567580, 09871799449	
	HRC FUSES	7	S02	SPACEAGE SWITCHGEARS LTD.	68 & 13-A INDUSTRIAL DEVELOPMENT COLONY, MEHRAULI ROAD GURGAON, HARYANA-122001	0124-2302711, 4085091	
	HRC FUSES	8	S03	SCHNEIDER ELECTRIC INDIA PVT. LTD.	9TH FLOOR, BLDG. NO. 10, TOWER-C, DLF CYBER CITY, PH-II, GURGAON-122002	0124-3940400	
	HRC FUSES	9	G01	ALSTOM LTD	A-7, SEC-65, NOIDA	0120-479 0000	
	HRC FUSES	10	E1050	ESSEN DEINKI	FLAT NO. 502, SKYLINE HOUSE 85, NEHRU PLACE NEW DELHI	011-26217060	
ES30	GALVANISING	1		M/s M J Engg	Delhi		
	GALVANISING	2		M/s A.V. Engg	Kolkata		
	GALVANISING	3		M/s Inar Profiles	Vishakapatnam		
	GALVANISING	4		M/s Anand Udyog	Mumbai		
	GALVANISING	5		M/s Techno Engg	Chandigarh		
	GALVANISING	6		M/S Steelite Engg	Mumbai		
	GALVANISING	7		M/s National Galvanizer	Kolkata		
	GALVANISING	8		M/s Unistar Galvanizer	Kolkata		
	GALVANISING	9		M/s B.P. Project	Kolkata		
	GALVANISING	10		M/s Bajaj	Pune		
	GALVANISING	11		M/s Electrocare Industries	Mumbai		
	GALVANISING	12		M/s B.G. Shirke	Pune		
	GALVANISING	13		M/s Gurpreet Galvanizer	Hyderabad		
	GALVANISING	14		M/s Sigma	Mumbai		
	GALVANISING	15		M/s Radhakrishnan Shetty	Chennai		
	GALVANISING	16		Karamtara	Mumbai		
	GALVANISING	17		Poona Galvanizers	Pune		
	GALVANISING	18		Neha Galvanizer	Kolkata		
	GALVANISING	19		Unitech Fabricators & Galvanizers	Hoogly		
	GI WIRE & FLAT	1	I039	INDUSTRIAL PERFORATION (I) PVT.LTD.	MR. A. K. SAHA 327, R.N.GUHA ROAD, DUM DUM KOLKATA-West Bengal-India Phone- 9830241788 Pincode : 700028 Email : ipipl@cal2.vsnl.net.in	011 2737 3579	
	GI WIRE & FLAT	2	I070	INDIA ELECTRICALS SYNDICATE	Mr. Suresh Kumar Agarwal 55, Ezra Street, Kolkata-West Bengal-India Phone- 033-22354047 Pincode : 700001 Email : cabletray@vsnl.com	022-28511704	
	GI WIRE & FLAT	3	I072	INDMARK FORMTECH PVT. LTD.	Mr. Narendra R. Meher J Block, Plot No.-375, MIDC BHOSARI PUNE-MAHARASHTRA-INDIA Phone- 020-27130546 Pincode : 411026 Email : indmarkformtech@vsnl.net		
	GI WIRE & FLAT	4	P039	PREMIER POWER PRODUCTS (CAL) PVT. LTD.	Chatterjee International Centre, 33A, Jawaharlal Nehru Road, 6th Floor, Suit No. - 11A, Kolkata,-West Bengal-India Phone- 9331008739 Pincode : 700071 Email : hemantdaga@dagaventures.com		
	GI WIRE & FLAT	5	P050	PATNY SYSTEMS (P) LTD	PATNY PLAZA 160 , SARDAR PATEL ROAD SEUNDRABAD SECUNDRABAD-TELANGANA-INDIA Phone- 040-27902451 Pincode : 500003 Email : mr.mkt@patnysystems.com		
	GI WIRE & FLAT	6	P079	PASSIVE INFRA PROJECTS PVT. LTD.	MR. VARUN AGRAWAL 182, VAISHALI, PITAMPURA Delhi-DELHI-INDIA Phone- 9871183059 Pincode : 110088 Email : ATANU.SAHA@PASSIVEINFRA.COM		

ITEM CODE	ITEM/SERVICE DESCRIPTION	SL NO.	VENDOR CODE	VENDOR NAME	ADDRESS	PHONE	REMARKS
ES31	GI WIRE & FLAT	7	R036	RUKMANI ELECTRICAL & COMPONENTS PVT LTD	11A , MAHARISHI DEBENDRA ROAD 1ST FL , ROOM NO.4 KOLKATA-WEST BENGAL-INDIA Phone- Pincode : 700007 Email : maruthikabra@gmail.com		
	GI WIRE & FLAT	8	R037	RATAN PROJECTS & ENGINEERING CO. PVT.LTD.	MR. G.D. SINGHEE/MR. MAHESH SINGHEE 26, P.K. TAGORE STREET, MAIN BUILDING KOLKATA-WEST BENGAL-INDIA Phone- 9830177331 Pincode : 700006 Email : mahesh@ratans.com		
	GI WIRE & FLAT	9	R041	RABI ENGINEERING WORKS PVT. LTD.	MR. TAPAN KUMAR SEN/MR. SIDDHARTHA 327, R.N. GUHA ROAD, DUM DUM, KOLKATA-WEST BENGAL-INDIA Phone- 9748753002 Pincode : 700028 Email : rabiengineering@gmail.com		
	GI WIRE & FLAT	10	R200	RAJASTHAN METAL SMELTING CO.	Mr. R. K. Tibrewala D-80, Road No. 7, V.K.I.A., Jaipur-Rajasthan-India Phone- 0141-2332269 Pincode : 302013 Email : info@rmscoindia.com		
	GI WIRE & FLAT	11	S210	SARAL INDUSTRIES	Mr. Y.K. Gupta L-1, L-2, Industrial Area-1 Sultanpur Road Rae Bareli-Uttar Pradesh-India Phone- 0535-2702474 Pincode : 229010 Email : saralindustries@gmail.com		
	GI WIRE & FLAT	12		PARCO Engineers Pvt. Ltd.	401, skyline Epitom Building ,Near to Jolly Gym Khana, Kirol Road , Vidhyavihar, MH 400086 India		
	GI WIRE & FLAT	13	U019	UNITECH FABRICATORS and ENGINEERS PVT LTD	INDRAPRASHTHA APARTMENT 24 , M.B.RAOD , BIRATI KALABAGAN KOLKATA KOLKATA-WEST BENGAL-INDIA Phone- Pincode : 700051 Email : ufepl@vsnl.net; ufepl@rediffmail.com	022 - 26230814	
ES32	HIGH MAST	1	B05	BAJAJ ELECTRICALS	BAJAJ ELECTRICALS LTD. ENGINEERING & PROJECTS BU (NORTH) 3rd FLOOR, GULMOHARHOUSE, COMMUNITY CENTRE 161/B-4, GAUTAM NAGAR, YUSUF SARAI NEW DELHI – 110049	SREEMANY. SR. MANAGER (PROJECTS) CONTACT DETAILS : (+91) 9871025705. MAIL ID :rabans@bajajelectricals.com;	
	HIGH MAST	2	TL01	M/S TRANSRAIL LIGHTING LIMITED (TLL)	M/S TRANSRAIL LIGHTING LIMITED (TLL), GAMMON INDIA LIMITED 2ND FLOOR , CENTRIC PLAZA, PLOT NO.8 POCKET-4, SECTOR-11 DWARKA , NEW DELHI -110075	hemant.jain@transrailltd.com'	
ES33	IND.POWER & WLDG SOCKETS	1	C02	CROMPTON GREAVES	3RD FLOOR, EXPRESS BUILDING,9-10, BAHADUR SHAH ZAFAR MARG, NEAR ITO CROSSING,NEW DELHI-110002, INDIA	91 11 23460700 - 999 'Sunil.Das@cgglobal.com	
	IND.POWER & WLDG SOCKETS	2	E1207	CYCLO ELECTRIC DEVICE & SERV.CO.	: A-3, NEAR ANTHEM BIOSCIENCE, KSSIDC INDUSTRIAL AREA, BOMMASANDRA, BOMMASANDRA INDUSTRIAL AREA, BANGALORE, KARNATAKA 560099	Mr. H.Jaishanker +919845039081, 080 - 27833102 , 080 - 27833103 : +91 80 41460985 'cycloelectric@gmail.com	
	IND.POWER & WLDG SOCKETS	3	B04	BCH	20/4, MATHURA ROAD, FARIDABAD - 121006, HARYANA, INDIA	0(129)-4063000, 9015800189(Ramesh Giri) 'ramesh.giri@bchindia.com	
	IND.POWER & WLDG SOCKETS	4	B02	BEST & CROMPTON	Best & Crompton Engineering Ltd	Ph : +91 44 4551 4724 , MRKT	BEST & CROMPTON
	IND.POWER & WLDG SOCKETS	5	A03	AJMERA INDUSTRIES & ENGG. WORKS	AJMERA INDL. AND ENGG. WORKS. AJMERA HOUSE, A-61 / KHAIRANE MIDC. , TTC INDL. AREA, NAVI MUMBAI – 400705.	Tel : 022 27620299 / 97 / 96 'mail@ajmera.net	
ES34	INTERPOSING RELAY	1	A24	ABB	14, MATHURA ROAD, FARIDABAD, HARYANA-121003	0129-2567580, 09871799449	
	INTERPOSING RELAY	2	G01	ALSTOM LTD	A-7, SEC-65, NOIDA	0120-479 0000	
	INTERPOSING RELAY	3	E1075	JYOTI LTD.	JYOTI LIMITED, E&CS DIVISION,3/15, BIDC, GORWA,VADODARA - 390 016, E-MAIL ID: ECS@JYOTI.COM	Ph. No.:+91-265-2281214 , Fax No.:+91-265-2281214	
	INTERPOSING RELAY	4	E1099	OEN INDIA LTD	29/1479, VYTILLA, COCHIN - 682 019 KERALA, INDIA	Phone : +91 484 2301132, 2303709 Fax : +91 484 2302287, 2302221 sales@oenindia.com	
	INTERPOSING RELAY	5	S01	SIEMENS	RC-IN I S NR DEL AREA, JIL BUILDING, TOWER-B, PLOT NO. 78, SECTOR 18, GURGAON-122015, INDIA	0124-2842000, 9873424331 amit.bhadauria@siemens.com	
ES35	INDICATING LAMPS	1	B04	BCH	20/4, MATHURA ROAD, FARIDABAD, HARYANA-121006	0129-4293000	
	INDICATING LAMPS	2	C01	C&S ELECTRIC LTD.	222, OKHLA IND. ESTATE, PH-III, NEW DELHI-110020	6832259,6918834-37	
	INDICATING LAMPS	3	E1050	ESSEN DEINKI	FLAT NO. 502, SKYLINE HOUSE 85, NEHRU PLACE NEW DELHI	011-26217060	
	INDICATING LAMPS	4	E1153	VAISHNO(HOTLINE SWGR.& CONTROL)	G-19, SECTOR - 11, NOIDA - 201301, UTTAR PRADESH, INDIA	8377805157 9818338922	
	INDICATING LAMPS	5	A35	GE-POWER	KAMAK TOWER, 3RD FLOOR, PLOT NO. 12-A, TVK INDUSTRIAL ESTATE, EKKADUTHANGAL, GUINDY, CHENNAI-600032	9818338922	
	INDICATING LAMPS	6	S01	SIEMENS	RC-IN I S NR DEL AREA, JIL BUILDING, TOWER-B, PLOT NO. 78, SECTOR 18, GURGAON-122015, INDIA	0124-2842000, 9873424331 amit.bhadauria@siemens.com	
	INDICATING LAMPS	7	S03	SCHNEIDER ELECTRIC INDIA PVT. LTD.	9TH FLOOR, BLDG. NO. 10, TOWER-C, DLF CYBER CITY, PH-II, GURGAON-122002	0124-3940400	
	JUNCTION BOXES (NON FLAME PROOF)	1	J01	JASPER ENGNIREES PVT. LTD.	A-23, SECTOR - 8, NOIDA-201301	0120-4033520/533	

ITEM CODE	ITEM/SERVICE DESCRIPTION	SL NO.	VENDOR CODE	VENDOR NAME	ADDRESS	PHONE	REMARKS
ES36	JUNCTION BOXES (NON FLAME PROOF)	2	EC05	Electro Controls & Devices	M/S ELECTRO CONTROLS & DEVICES, F-41, SITE-C, SURAJPUR INDUSTRIAL AREA GREATER NOIDA, UTTAR PRADESH :201308	Mr. Sanjay Sharma (Chief Promoter) 0120-2569487, 2560100,2560300	
	JUNCTION BOXES (NON FLAME PROOF)	3	SRC01	M/s Shrenik & Co.	39A/3, PANCHRATNA INDUSTRIAL ESTATE, SARKHEJ-BAVLA ROAD, CHANGODAR, AHMEDABAD – 382 213	020-026708100	
	JUNCTION BOXES (NON FLAME PROOF)	4	PME-01	M/s PHOENIX MECANO LTD.,	388 BHARE, TALUKA MULSHI, POST GHOTAWADE, PIRANGOOT, INDUSTRIAL AREA, PUNE-412115	Awasthi(09971119006) Tel: ++91 20 6674 5103, Mobile: +91 90499 95985, Fax: ++91 20 6674 5126	
	JUNCTION BOXES (NON FLAME PROOF)	5	ACE01	Adroit Control Engineers Pvt.Ltd.	M/S ADROIT CONTROL ENGINEERS PVT.LTD. PLOT-3, KRISHNA INDL. AREA, SECTOR-25 FARIDABAD – 121004	011-47600700, 0129-4251400	
	JUNCTION BOXES (NON FLAME PROOF)	6	PME-01	M/s PHOENIX MECANO LTD.,	388 BHARE, TALUKA MULSHI, POST GHOTAWADE, PIRANGOOT, INDUSTRIAL AREA, PUNE-412115	Awasthi(09971119006) Tel: ++91 20 6674 5103, Mobile: +91 90499 95985, Fax: ++91 20 6674 5126 contact person : Vishwa bandhu E-mail:d.gupta@pmipl-online.com ;admin@pmipl-online.com	
	JUNCTION BOXES (NON FLAME PROOF)	7	MK01	MIKA ENGINEERS	BRANCH OFFICE : 'D'-101, DHEERAJ HERITAGE RESIDENCY II, SHASTRI NAGAR, SANTACRUZ (W), MUMBAI 400 054.	Director : Mr. Asgar Karimi Email: asgar@mikaengineers.com E-mail : mika@mtnl.net.inTelfax : 022-26610081/82/83/84Tel : 02527-249066/70 Cell : 099230 74373	TYPE-S ONLY
	JUNCTION BOXES (NON FLAME PROOF)	8	PME-01	M/s PHOENIX MECANO LTD.,	388 BHARE, TALUKA MULSHI, POST GHOTAWADE, PIRANGOOT, INDUSTRIAL AREA, PUNE-412115	TEL.- +912066745000 Awasthi(09971119006) Tel: ++91 20 6674 5103, Mobile: +91 90499 95985, Fax: ++91 20 6674 5126 contact person : Vishwa bandhu E-mail:d.gupta@pmipl-online.com ;admin@pmipl-online.com	
	JUNCTION BOXES (NON FLAME PROOF)	9	B05	BAJAJ ELECTRICALS	BAJAJ ELECTRICALS LTD. ENGINEERING & PROJECTS BU (NORTH) 3rd FLOOR, GULMOHARHOUSE, COMMUNITY CENTRE 161/B-4, GAUTAM NAGAR, YUSUF SARAI NEW DELHI – 110049	CONTACT PERSON : Mr. S. SREEMANY. SR. MANAGER (PROJECTS) CONTACT DETAILS : (+91) 9871025705. MAIL ID : srabans@bajajelectricals.com;	
	JUNCTION BOXES (NON FLAME PROOF)	10	A03	AJMERA INDUSTRIES & ENGG. WORKS	AJMERA INDL. AND ENGG. WORKS. AJMERA HOUSE, A-61 / KHAIRANE MIDC. , TTC INDL. AREA, NAVI MUMBAI – 400705.	Tel : 022 27620299 / 97 / 96 'mail@ajmera.net	
	JUNCTION BOXES (NON FLAME PROOF)	11	SB02	S.B. ELECTRICAL ENGINEERING CORPORATION	03, SARDAR GRIHA BUILDING, LOHAR CHAWAL, MUMBAI-400002	022- 22069831; 022-66637259	
	JUNCTION BOXES (NON FLAME PROOF)	12	RT13	RITTAL INDIA PVT. LTD.	Espire Building ,Level -1 A-41, Mohan Co-Operative Industrial Estate ,Mathura Road, New Delhi -110044	Amit Bansal Phone: 011-42004000, D: 011-42004033 · Mobile: +91 9717772245 · mailto:amit.b@rittal-india.com www.rittal-india.com	
	JUNCTION BOXES (NON FLAME PROOF)	13	HP08	HPL ELECTRIC AND POWER LTD.	Works Address: Village Shavella, PO:Jabli, Teh-Kasauli, Dist-Solan, Himachal Pradesh-173209	Mr. Ashwani Kumar mailto:'ashwani@hplindia.com' M:9971127370	
ES37	JUNCTION BOXES (FLAME PROOF)	1	SS01	SUDHIR SWITCHGEAR	305/6, APEEJAY HOUSE, 130, BOMBAY SAMACHAR MARG, MUMBAI - 400 023. INDIA	Telephone Nos. : 40460000 (100 lines) Fax Nos. : ++-91-22-22049381 Email : md@sudhirswitchgears.com ; works@sudhirswitchgears.com ;scud@vsnl.com	
	LIGHTING DISTRIBUTION BOARDS	1		Switching Circuits	Kolkata		
	LIGHTING DISTRIBUTION BOARDS	2		Hindustan Control & equipment Ltd	Kolkata		With fabrication & painting at unit II & MP Electrical Narendrapur
	LIGHTING DISTRIBUTION BOARDS	3		Maktel	Vadodara		Prior Type Testing
	LIGHTING DISTRIBUTION BOARDS	4		Jakson	Greater Noida		
	LIGHTING DISTRIBUTION BOARDS	5		Vidyut Control	Gaziabad		
	LIGHTING DISTRIBUTION BOARDS	6		Adlec Power	Rohad (Jhajjar)		
	LIGHTING DISTRIBUTION BOARDS	7		Conquerent Control System	Manesar		Condition apply ,upto 1250A

ITEM CODE	ITEM/SERVICE DESCRIPTION	SL NO.	VENDOR CODE	VENDOR NAME	ADDRESS	PHONE	REMARKS
ES38	LIGHTING DISTRIBUTION BOARDS	8		Control & Schematics	Hyderabad		
	LIGHTING DISTRIBUTION BOARDS	9		Positronics	Vadodara		
	LIGHTING DISTRIBUTION BOARDS	10		Schneider (formerly L&T)	Mumbai / Coimbatore/Ahmednagar		
	LIGHTING DISTRIBUTION BOARDS	11		GE	Bangalore		
	LIGHTING DISTRIBUTION BOARDS	12		C&S Electric	Noida/ Haridwar		
	LIGHTING DISTRIBUTION BOARDS	13		Schneider	Nasik		
	LIGHTING DISTRIBUTION BOARDS	14		Pyrotech	Udaipur		
	LIGHTING DISTRIBUTION BOARDS	15		Siemens	Kalwa		
	LIGHTING DISTRIBUTION BOARDS	16		Tricolite	Sahibabad/Manesar		
	LIGHTING DISTRIBUTION BOARDS	17		Schneider	Vadodara		
	LIGHTING DISTRIBUTION BOARDS	18		Nitya Electrocontrols	Noida		
ES39	LIGHTING FIXTURES (NON LED)	1	E1206	BALIGA LIGHTING EQPT PVT LTD	63A,CP RAMASWAMY ROAD, PB NO 6910, CHENNAI-600018	44-24995505,22680990-4	
	LIGHTING FIXTURES (NON LED)	2	F04	ELEXPRO ELECTRICALS PVT/ LTD.	C 1/27 & 37 GIDC KABILPORE NAVSARI-396424	02637-265140, Mr. Jssk kumar	
	LIGHTING FIXTURES (NON LED)	3	B05	BAJAJ ELECTRICALS	BAJAJ ELECTRICALS LTD. ENGINEERING & PROJECTS BU (NORTH) 3rd FLOOR, GULMOHARHOUSE,	CONTACT PERSON : Mr. S. SREEMANY. SR. MANAGER (PROJECTS) CONTACT DETAILS :	
	LIGHTING FIXTURES (NON LED)	4	C02	CROMPTON GREAVES	3RD FLOOR, EXPRESS BUILDING,9-10, BAHADUR SHAH ZAFAR MARG, NEAR ITO CROSSING,NEW DELHI-110002, INDIA	91 11 23460700 - 999 Sunil.Das@cgglobal.com, Mr. Prashant Wewhare 9930095703	
	LIGHTING FIXTURES (NON LED)	5	E1051	EVERGREEN ENGG. CO.	EVERGREEN ENGG COMPANY WORKS-5, PLOT NO. 9,10,11,12, SURVEY NO. 242, CHINCH PADA, VASAI EAST-401208	(0250) 6458250	
	LIGHTING FIXTURES (NON LED)	6	P01	PHILIPS	9TH FLOOR,DLF 9B, DLF CYBER CITY, DLF PHASE-III,GURGAON-122002	01244606001, Sharad (+919871150447)	
	LIGHTING FIXTURES (NON LED)	7	WP01	WIPRO LTD.	WIPRO CONSUMER CARE AND LIGHTING, 5TH FLOOR, GODREJ ETERNIA -C, OLD PUNE-MUMBAI ROAD, SHIVAJINAGAR, PUNE -411005	020-66098700	
	LIGHTING FIXTURES (NON LED)	8	HP01	M/S HPL ELECTRIC & POWER PVT. LTD	M/S HPL ELECTRIC & POWER PVT. LTD. PLOT NO. 76-B,PHASE-IV, SEC-57, HSIIDC, INDL. AREA , KUNDLI,	mohitsharma@hplindia.com'	
	LIGHTING FIXTURES (NON LED)	9	SR01	SURYA ROSHNI LIMITED	PADMA TOWER, RAJENDRA PLACE, RAJENDRA PLACE NEW DELHI	011-25810093 ; 9810071832 (Akhilesh Agrawal) aagrawal@sroshni.com	
	LIGHTING FIXTURES (NON LED)	10	HI02	HAVELLS INDIA LIMITED	QRG TOWERS , 2D SECTOR-126, NOIDA- 201301	GIRISH KUMAR SHRIVASTAVA +91-9810528922	
	LIGHTING FIXTURES (NON LED)	11	HN13	M/s Halonix Technologies Limited	M/s Halonix Technologies Limited B-31 , Phase –II, Noida Distt. Gautam Budh Nagar (U.P.)	Mr. Mohit Gautam ' 'Tel: +919568152111 'mohit.gautam@halonix.co.in';	
	LIGHTING FIXTURES (LED)	1	NE01	Neev Luminaries	B-6/3 Okhla Industrial Area | Phase-2| New Delhi | 110020	M:8826995888 Fax: +91 11 4060 4831	
	LIGHTING FIXTURES (LED)	2	HI01	HAVELLS INDIA LIMITED	QRG TOWERS , 2D SECTOR-126, NOIDA- 201301	+91-9810528922, girish.srivastava@havells.com\	
	LIGHTING FIXTURES (LED)	3	B05	BAJAJ ELECTRICALS	BAJAJ ELECTRICALS LTD. ENGINEERING & PROJECTS BU (NORTH) 3rd FLOOR, GULMOHARHOUSE,	CONTACT PERSON : Mr. S. SREEMANY. SR. MANAGER (PROJECTS) CONTACT DETAILS :	
	LIGHTING FIXTURES (LED)	4	SR01	SURYA ROSHNI LIMITED	1	011-25810093 ; 9810071832 (Akhilesh Agrawal) aagrawal@sroshni.com	
	LIGHTING FIXTURES (LED)	5	P01	PHILIPS	9TH FLOOR,DLF 9B, DLF CYBER CITY, DLF PHASE-III,GURGAON-122002	01244606001, Sharad (+919871150447), Mr. Guruseelan M 8939693949, Mr Ashish Sethi	
	LIGHTING FIXTURES (LED)	6	HP01	M/S HPL ELECTRIC & POWER PVT. LTD	M/S HPL ELECTRIC & POWER PVT. LTD. PLOT NO. 76-B,PHASE-IV, SEC-57, HSIIDC, INDL. AREA , KUNDLI,	mohitsharma@hplindia.com, Mr. Nitesh Verma 8851036938, Mr Ajay lakra 9560045423	
	LIGHTING FIXTURES (LED)	7	INS1	INSTA POWER	PLOT NO. - 457 PHASE - V, UDYOG VIHAR, GURGAON - 122016	124-4124000, Mr amit Bhardwar: 8800508090	
	LIGHTING FIXTURES (LED)	8	PT13	Pyrotech Electronics Pvt. Ltd.	M/s Pyrotech Electronics Pvt. Ltd(Unit -1) Led Light, Sensor Division F-16A, Road No.3	Concern Person – Mr. Praveen sisodiya : 9314310042(psisodia@pyrotechlig	
	LIGHTING FIXTURES (LED)	9	HN13	M/s Halonix Technologies Limited	M/s Halonix Technologies Limited B-31 , Phase –II, Noida Distt. Gautam Budh Nagar (U.P.)	Mr. Mohit Gautam ' 'Tel: +919568152111 'mohit.gautam@halonix.co.in'; M:	
	LIGHTING FIXTURES (LED)	10	JA13	M/s JAQUAR & COMPANY PVT. LTD.	M/s JAQUAR & COMPANY PVT. LTD. Plot No.3 , Sector M-11, IMT Manesar. Gurgaon· 122050 Haryana	Mr. Dhruv Kumar ' 'Tel: +919350043727 dhruv.kumar@jaquar.com ;	
	LIGHTING FIXTURES (LED)	11	CR13	M/s CROMPTON GREAVES CONSUMER ELECTRICALS LTD.	M/s CROMPTON GREAVES CONSUMER ELECTRICALS LTD.Tower-3, 1st Floor, East Wing Equinox Business Park	Mr S L Sivakumar 'Sivakumar L' <sivakumar.sl@crompton.co.in> M: 9176609363	

ITEM CODE	ITEM/SERVICE DESCRIPTION	SL NO.	VENDOR CODE	VENDOR NAME	ADDRESS	PHONE	REMARKS
ES40	LIGHTING FIXTURES (LED)	12	WI13	M/s WIPRO ENTERPRISES PRIVATE LTD.	M/s WIPRO ENTERPRISES PRIVATE LTD. L-8, MIDC Waluj, Aurangabad-431136, Maharashtra, India	Mr Akhilesh Chouhan 'akhilesh.chouhan@wipro.com' M 9425072138	
	LIGHTING FIXTURES (LED)	13	NI13	M/s Nessa Illumination Technologies Pvt. Ltd.	M/s Nessa Illumination Technologies Pvt. Ltd.36/A Devraj Industrial Park, Opp. Sameep Fabrics,	Mr. Dhaval Shah <dhaval@nessa.in> M 9825650354, Mr. Akshat Khare	
	LIGHTING FIXTURES (LED)	14	FE13	M/s. Forus Electric Pvt. Ltd.	M/s. Forus Electric Pvt. Ltd. B-313, Okhla Industrial Area, Phase-1, New delhi-110020	Mr. Amit Bharadwaj <amit.bharadwaj@foruselectric.com> M 8800508090, Mr. Uttam	
	LIGHTING FIXTURES (LED)	15	OE13	M/s. ORIENT ELECTRIC LIMITED.	C- 130, Sector-63, Noida-201301, Uttar Pradesh, D-209, Sector-63, Noida-201301, Uttar Pradesh	Birjendra Kumar Yadav <birjendra.yadav@orientelectric.com> P. +91-120-4894900 , +91-	
	LIGHTING FIXTURES (LED)	16	ME13	M/s Mika Engineers	Survey no. 47, shed no. 2, AGHAI, Shahpur-wada road, AGHAI Thane, Maharashtra-421601	"deepak" <deepak@mikaengineers.com>MOB: 8976737543	
	LIGHTING FIXTURES (LED)	17	KI13	M/s Kalingia Illuminaton Pvt Ltd.	15/3/2 SITE-IV SAHIBABAD INDUSTRIAL AREA GHAZIABAD UP 201010	Suresh Shiromani' <suresh.shiromani@kalingialights.com>, 'info@kalingialights.com',	
	LIGHTING FIXTURES (LED)	18	LL13	Ledure Lightings Limited	Registered Office Address: 115, First Floor, Devika Tower Nehru Place, New Delhi - 110091 Works Address: A-40, Sector-58, Noida, Gautam	Mr. Umang Aggarwal Email ID: tenders@ledure.com; Ph. No.: 9313370712	
	LIGHTING FIXTURES (LED)	19	SI13	M/S SHAKTI INDUSTRIES	Works Address: PLOT NO. 94-I, SECTOR-6A,IIE,SIDCUL,HARIDWAR,UTTARAKHAND, 249403	Bidyut Mandal' <bidyut.mandal@shaktiindustries.in> (M: 9555367941 / 9315029882)	
	LIGHTING FIXTURES (LED)	20	CL13	M/S CENTURY LED	Srijan Industrial Logistic Park, Part B, Block A, NH-06, Bombay High way, Near Saraswati Bridge, PO Andul-	Mr Subhadeep Majumdar <subhadeep.majumdar@centuryled.in> (M: 8900735536 /	
	LIGHTING FIXTURES (LED)	21	GL13	M/S GOLDWYN LTD.	B-60, SECTOR 60 NOIDA, GAUTAM BUDH NAGAR , UTTAR PRADESH. PIN-201301	Suresh Singh <tender@goldwynled.com>, 'sales@goldwynled.com' Mob. +91	
	LIGHTING FIXTURES (LED)	22	EG13	M/s EnergyGreen TechnoPower Pvt. Ltd.	32/2, Sector-E, Industrial Area, Govindpura, Bhopal-462023, Madhya Pradesh	Bhupendra Kshirsagar bhupendra.kshirsagar@energygreen.co.in, Mobile: +91-9425998717 ,	
ES41	LIGHTING FIXTURES (FLAME PROOF)	1	HI01	HAVELLS INDIA LIMITED	QRG TOWERS , 2D SECTOR-126, NOIDA- 201301	GIRISH KUMAR SHRIVASTAVA +91-9810528922	
	LIGHTING FIXTURES (FLAME PROOF)	2	B05	BAJAJ ELECTRICALS	BAJAJ ELECTRICALS LTD. ENGINEERING & PROJECTS BU (NORTH) 3rd FLOOR, GULMOHARHOUSE, COMMUNITY CENTRE 161/B-4, GAUTAM NAGAR, YUSUF SARAI NEW DELHI – 110049	CONTACT PERSON : Mr. S. SREEMANY. SR. MANAGER (PROJECTS) CONTACT DETAILS : (+91) 9871025705. MAIL ID : srabans@bajajelectricals.com;	
	LIGHTING FIXTURES (FLAME PROOF)	3	E1206	BALIGA ELECTRICALS	63A,CP RAMASWAMY ROAD, PB NO 6910, CHENNAI-600018	44-24995505,22680990-4, Mr. Vipin kumar (8939880502, baligadel@baliga.com)	
ES42	LIGHTING LAMP (NON LED)	1	WP01	WIPRO LTD.	WIPRO CONSUMER CARE AND LIGHTING, 5TH FLOOR, GODREJ ETERNIA -C, OLD PUNE-	020-66098700	
	LIGHTING LAMP (NON LED)	2	E1050	ESSEN DEINKI	FLAT NO. 502, SKYLINE HOUSE 85, NEHRU PLACE NEW DELHI	9818338922	
	LIGHTING LAMP (NON LED)	3	B05	BAJAJ ELECTRICALS	BAJAJ ELECTRICALS LTD. ENGINEERING & PROJECTS BU (NORTH) 3rd FLOOR, GULMOHARHOUSE, COMMUNITY CENTRE 161/B-4, GAUTAM NAGAR, YUSUF SARAI NEW DELHI – 110049	CONTACT PERSON : Mr. S. SREEMANY. SR. MANAGER (PROJECTS) CONTACT DETAILS : (+91) 9871025705. MAIL ID : srabans@bajajelectricals.com;	
	LIGHTING LAMP (NON LED)	4	INS1	INSTA POWER	PLOT NO. - 457 PHASE - V, UDYOG VIHAR, GURGAON - 122016	124-4124000	
	LIGHTING LAMP (NON LED)	5	P01	PHILIPS	9TH FLOOR,DLF 9B, DLF CYBER CITY, DLF PHASE-III,GURGAON-122002	01244606001, Sharad (+919871150447)	
	LIGHTING LAMP (NON LED)	6	HI01	HAVELLS INDIA LIMITED	QRG TOWERS , 2D SECTOR-126, NOIDA- 201301	GIRISH KUMAR SHRIVASTAVA +91-9810528922	
	LIGHTING LAMP (NON LED)	7	HP01	HPL	M/S HPL ELECTRIC & POWER PVT. LTD. PLOT NO. 76-B,PHASE-IV, SEC-57, HSIIDC, INDL. AREA , KUNDLI, DIST.- SONEPAT (HARYANA) - 131028	mohitsharma@hplindia.com'	
	LIGHTING LAMP (NON LED)	8	SR01	SURYA ROSHNI LIMITED	PADMA TOWER, RAJENDRA PLACE, RAJENDRA PLACE NEW DELHI	011-25810093 ; 9810071832 (Akhilesh Agrawal) aagrawal@sroshni.com	
	LIGHTING LAMP (NON LED)	9	HN13	M/s Halonix Technologies Limited	M/s Halonix Technologies Limited B-31 , Phase –II, Noida Distt. Gautam Budh Nagar (U.P.) Pin- 201305	Mr. Mohit Gautam ' 'Tel: +919568152111 'mohit.gautam@halonix.co.in'; 'rahul.singh@halonix.co.in'	
	LIGHTING LAMP (LED)	1	NE01	Neev Luminaries	D-115 , OKHLA INDUSTRIAL AREA, PHASE-1 NEW DELHI – 110020	Phone: +91 11 4060 4830 Fax: +91 11 4060 4831 info@neevenergy.in	
	LIGHTING LAMP (LED)	2	HI01	HAVELLS INDIA LIMITED	QRG TOWERS , 2D SECTOR-126, NOIDA- 201301	GIRISH KUMAR SHRIVASTAVA +91-9810528922	
	LIGHTING LAMP (LED)	3	B05	BAJAJ ELECTRICALS	BAJAJ ELECTRICALS LTD. ENGINEERING & PROJECTS BU (NORTH) 3rd FLOOR, GULMOHARHOUSE, COMMUNITY CENTRE 161/B-4, GAUTAM NAGAR, YUSUF SARAI NEW DELHI – 110049	CONTACT PERSON : Mr. S. SREEMANY. SR. MANAGER (PROJECTS) CONTACT DETAILS : (+91) 9871025705. MAIL ID : srabans@bajajelectricals.com;	

ITEM CODE	ITEM/SERVICE DESCRIPTION	SL NO.	VENDOR CODE	VENDOR NAME	ADDRESS	PHONE	REMARKS
ES43	LIGHTING LAMP (LED)	4	SR01	SURYA ROSHNI LIMITED	PADMA TOWER, RAJENDRA PLACE, RAJENDRA PLACE NEW DELHI	011-25810093 ; 9810071832 (Akhilesh Agrawal) aagrawal@sroshni.com	
	LIGHTING LAMP (LED)	5	P01	PHILIPS	9TH FLOOR,DLF 9B, DLF CYBER CITY, DLF PHASE-III,GURGAON-122002	01244606001, Sharad (+919871150447)	
	LIGHTING LAMP (LED)	6	HP01	M/S HPL ELECTRIC & POWER PVT. LTD	M/S HPL ELECTRIC & POWER PVT. LTD. PLOT NO. 76-B,PHASE-IV, SEC-57, HSIIDC, INDL. AREA , KUNDLI, DIST.- SONEPAT (HARYANA) - 131028	mohitsharma@hplindia.com	
	LIGHTING LAMP (LED)	7	INS1	INSTA POWER	PLOT NO. - 457 PHASE - V, UDYOG VIHAR, GURGAON - 122016	124-4124000	
	LIGHTING LAMP (LED)	8	PT13	Pyrotech Electronics Pvt. Ltd.	M/s Pyrotech Electronics Pvt. Ltd(Unit -1) Led Light, Sensor Division F-16A, Road No.3 Mewar Industrial Area, Madri Udaipur -313003, Rajasthan,	Concern Person – Mr. Praveen sisodiya (psisodia@pyrotechlighting.com) Ankit Kumar Sr. Engineer(North Region -Sales & Marketing) # +91- 7340061769, 8287897309	
	LIGHTING LAMP (LED)	9	HN13	M/s Halonix Technologies Limited	M/s Halonix Technologies Limited B-31 , Phase –II, Noida Distt. Gautam Budh Nagar (U.P.) Pin- 201305	Mr. Mohit Gautam ' 'Tel: +919568152111 'mohit.gautam@halonix.co.in'; 'rahul.singh@halonix.co.in'	
ES44	LIGHTING POLES	1		BAJAJ	PUNE		
	LIGHTING POLES	2		BP PROJECTS	KOLKATA		
	LIGHTING POLES	3		SKIPPER	HOWRAH		
	LIGHTING POLES	4		TRANSRAIL LIGHTING	SILVASSA		
	LIGHTING POLES	5	E1033	BOMBAY TUBE & POLES CO.	BOMBAY TUBES & POLES CO. 2ND LANE, DARUKHANA, PLOT NO. 100, MAZGAON, MUMBAI - 10	Tel. : +91 22 23729802, email ID: btpc1954@hotmail.com	**These are BHEL approved sources. Acceptance of these shall be subject to customer approval.**
	LIGHTING POLES	6	E1118	RIDHDHI POLES	4/5 INDUSTRIAL ESTATE, GORWA, VADODRA-390016	0265 - 2283768	
	LIGHTING POLES	7	MK01	MIKA ENGINEERS	BRANCH OFFICE : 'D'-101, DHEERAJ HERITAGE RESIDENCY II, SHASTRI NAGAR, SANTACRUZ (W), MUMBAI 400 054. WORKS : AT POST AGHAI, SHED NO. 2, VILLAGE AGHAI JILLA, SHAHPUR, DIST. THANE 421 601 TEL : 02527-249066/70 CELL : 099230 74373	**Director :** Mr. Asgar Karimi Email: asgar@mikaengineers.com;mika@mtnl.net.in Telfax : 022-26610081/82/83/84 Tel : 02527-249066/70 Cell : 099230 74373	
	LIGHTING POLES	8	K02	KL INDUSTRIES	B1 1001 LOK GAURAV, LBS MARG, VIKHROLI WEST, MUMBAI - 400083	(91)-9821013736 (91)-22-25774272	
	LIGHTING POLES	9	B05	BAJAJ ELECTRICALS	BAJAJ ELECTRICALS LTD. ENGINEERING & PROJECTS BU (NORTH) 3rd FLOOR, GULMOHARHOUSE, COMMUNITY CENTRE 161/B-4, GAUTAM NAGAR, YUSUF SARAI NEW DELHI – 110049	CONTACT PERSON : Mr. S. SREEMANY. SR. MANAGER (PROJECTS) CONTACT DETAILS : (+91) 9871025705. MAIL ID : srabans@bajajelectricals.com;	
	LIGHTING POLES	10	TL01	TLL	M/S TRANSRAIL LIGHTING LIMITED (TLL), GAMMON INDIA LIMITED 2ND FLOOR , CENTRIC PLAZA, PLOT NO.8 POCKET-4, SECTOR-11 DWARKA , NEW DELHI -110075	hemant.jain@transrailltd.com'	
ES45	LIGHTING SWITCH , SOCKET & S/F UNIT	1	F04	ELEXPRO ELECTRICALS PVT/ LTD.	C 1/27 & 37 GIDC KABILPORE NAVSARI-396424	02637-265140, Mr. Jssk kumar	
	LIGHTING SWITCH , SOCKET & S/F UNIT	2	E1012	ANCHOR	STEEL HOUSE, B WING, PLOT NO. 24, MAHAL INDUSTRIAL ESTATE, MAHAKALI CAVES ROAD, NEAR PAPER BOX, ANDHERI (E), MUMBAI, MAHARASHTRA.- 400093	022-30418888.	
	LIGHTING SWITCH , SOCKET & S/F UNIT	3	E1076	KAYCEE	KAYCEE INDUSTRIES LTD., C/O-CMS COMPUTERS LTD., 35A, REAR BLDG., KILOKARI, NEW DELH1-110014	Rajiv Sharma-9312004687	
	LIGHTING SWITCH , SOCKET & S/F UNIT	4	L01	LK (Formerly L&T)	Lauritz Knudsen Electrical & Automation A/600, SHIL – Mahape Road, TTC Industrial Area, MIDC Thane, Mumbai, Maharashtra 400710	Pranjal Tyagi, Pranjal.Tyagi@lk-ea.com, Mobile - 8976907537, Telephone: +91 22 69327800	
	LIGHTING SWITCH , SOCKET & S/F UNIT	5	S01	SIEMENS	RC-IN I S NR DEL AREA, JIL BUILDING, TOWER-B, PLOT NO. 78, SECTOR 18, GURGAON-122015, INDIA	0124-2842000, 9873424331 amit.bhadauria@siemens.com	
	LIGHTING SWITCH , SOCKET & S/F UNIT	6	E1068	INDO ASIAN	B-24, PHASE - II , NOIDA - 201305, U.P.	120-3042222	
	LIGHTING TRANSFORMER	1	E1021	AUTOMATIC ELECTRIC LTD.	ADDRESS : 96 AB LONAVLA INDUSTRIAL ESTATE NANGARGAON, LONAVLA-410401	Phone : +91 2114323665 Fax : +91 2114273482	
	LIGHTING TRANSFORMER	2	E1066	INDCOIL	PLOT NO. A- 150/ 151, 23RD U ROAD, WAGLE ESTATE, THANE WEST, CST RD, FRIENDS COLONY, HALLOW PUL, KURLA WEST, MUMBAI, MAHARASHTRA 400070	Phone:022 2583 8305	

ITEM CODE	ITEM/SERVICE DESCRIPTION	SL NO.	VENDOR CODE	VENDOR NAME	ADDRESS	PHONE	REMARKS
ES46	LIGHTING TRANSFORMER	3	E1103	POWER PACK ENTERPRISES	POWER PACK ENTERPRISES MR. NEHAL SHAH / MR. SHARAD SHAH (PARTNER) NO. 3, JAYSHREE SADAN, 1ST FLOOR, OLD NAGARDAS ROAD, ANDHERI EAST MUMBAI - 400069, MAHARASHTRA, INDIA	Call Us:08447573761 Mobile: +(91)-9821787821 +(91)-9821035604	
	LIGHTING TRANSFORMER	4	E1155	VIJAY ELECTRICALS LTD.	6-3-648/1&2, OFF RAJ BHAVAN ROAD, SOMAJIGUDA, HYDERABAD - 500 082. ANDHRA PRADESH, INDIA.	Vijay Electricals Mr. Bharat Giri / Ajay Giri (CEO) B 79, Gali No. 60, Sanjay Colony, Sector- 23 Faridabad - 121005, Haryana, India Call Us: 09953353612 websales@vijaielectricals.com	
	LIGHTING TRANSFORMER	5	E1057	GILBERT & MAXWELL	WORKS PLOT G-28 , M.I.D.C., AMBAD NASHIK - 422010, MAHARASHTRA, INDIA	Mr. Sanjeev Kulkarni, (Marketing Manager) | Cell: 9822586724 sanjeevkulkarni@gilbert-maxwell.in Phone : + 91 - 253 - 238 25 51 Fax : + 91 - 253 - 238 25 52	
	LIGHTING TRANSFORMER	6	K18	KAPPA ELECTRICALS	KAPPA ELECTRICALS, KAPPA CONSOLIDATED PVT. LTD., SOUTHERN ELECTRIKS 14, CART TRACK ROAD, MADUVANKARAI, CHENNAI - 600 042, INDIA.	PHONE: +91 - 44 - 22454709, 22454516, 22450794, 22450795 FAX: +91 - 44 - 22351662, 22451693 E-MAIL: mira@kappaelectricals.com sales@kappaelectricals.com	
	LIGHTING TRANSFORMER	7	AIE01	Ames Impex Electricals Pvt. Ltd	C-1B/1207, PHASE IV, GIDC NARODA, AHMEDABAD, GUJARAT 382330	Phone:079 2282 1648	
	LIGHTING TRANSFORMER and Control transformer	1	GPID01	Gujarat Plug - In Devices Pvt Ltd.	565, Village - Latipura, Taluka – Padra, Vadodra – 391440	GPD Marketing' <marketing1@gpd-transformers.com>; 'Gitesh Chitaliya' <gitesh@gpd-transformers.com> Mr Gitesh: 9925237223	Registered on 08.08.14, renewed on 15.04.24
ES47	LOCAL PUSH BUTTON STATION (NON FLAME PROOF)	2	A35	GE-POWER	KAMAK TOWER, 3RD FLOOR, PLOT NO. 12-A, TVK INDUSTRIAL ESTATE, EKKADUTHANGAL, GUINDY, CHENNAI-600032	044-49681447	
	LOCAL PUSH BUTTON STATION (NON FLAME PROOF)	3	E1019	ASIATIC	A-58 NARAINA IND. AREA, PHASE-I , NEW DELHI 110028	011 - 25796330, 25796617	
	LOCAL PUSH BUTTON STATION (NON FLAME PROOF)	4	C01	C&S ELECTRIC LTD.	222, OKHLA IND. ESTATE, PH-III, NEW DELHI-110020	011 - 25793021	
	LOCAL PUSH BUTTON STATION (NON FLAME PROOF)	5	E1051	EVERGREEN ENGG. CO.	EVERGREEN ENGG COMPANY WORKS-5, PLOT NO. 9,10,11,12, SURVEY NO. 242, CHINCH PADA, VASAI EAST-401208	(0250) 6458250	
	LOCAL PUSH BUTTON STATION (NON FLAME PROOF)	6	E1143	TECKNIC CONTROLS	703, MADHAVA, BANDRA, KURLA COMPLEX, BANDRA EAST, MUMBAI, MAHARASHTRA 400051	022-42532507/00 022-24451648	
	LOCAL PUSH BUTTON STATION (NON FLAME PROOF)	7	E1053	EX-PROTECTA LIGHTING EQUIPMENT	305-306, GIDC ESTATE, VITHAL UDYOGNAGAR - 388121 DIST. ANAND, GUJARAT 388121 INDIA	02692-237823	
	LOCAL PUSH BUTTON STATION (NON FLAME PROOF)	8	E1206	BALIGA ELECTRICALS	63A,CP RAMASWAMY ROAD, PB NO 6910, CHENNAI-600018	44-24995505,22680990-4	
	LOCAL PUSH BUTTON STATION (NON FLAME PROOF)	9	E1210	ENPRO ENGG.	NO.995P, DIAMOND PLAZA, 2ND FLOOR, 12TH MAIN ROAD, ANNA NAGAR, CHENNAI-40	044 – 42611526 / 42170338 / 26262716 enproengg@enproengineering.com	
	LOCAL PUSH BUTTON STATION (NON FLAME PROOF)	10	E1132	STERLING SWGR CONTROL PVT.LTD.	P.O. BOX NO. 17023, SORAB HOUSE, 2ND FLOOR, 555, S.B. MARG, DADAR, MUMBAI - 400028, MAHARASHTRA, INDIA	91-22-24222297/24222298/24224236	
	LOCAL PUSH BUTTON STATION (NON FLAME PROOF)	11	F04	ELEXPRO ELECTRICALS PVT/ LTD.	C 1/27 & 37 GIDC KABILPORE NAVSARI-396424	02637-265140, Mr. Jssk kumar	
	LOCAL PUSH BUTTON STATION (NON FLAME PROOF)	12	E1153	VAISHNO(HOTLINE SWGR & CONTROL)	G-19, SECTOR - 11, NOIDA - 201301, UTTAR PRADESH, INDIA	8377805157 9818338922	
	LOCAL PUSH BUTTON STATION (NON FLAME PROOF)	13	J01	JASPER ENGNIREES PVT. LTD.	A-23, SECTOR - 8, NOIDA-201301	0120-4033520/533	
	LOCAL PUSH BUTTON STATION (NON FLAME PROOF)	14	KM1	KMG ATOZ SYSTEMS	C-49, SECTOR-81-NOIDA-201305	120-4207920, 08527897328	
	LOCAL PUSH BUTTON STATION (NON FLAME PROOF)	15	E05	UNILEC ENGINEERS PVT. LTD.	BEHRAMPUR INDUSTRIAL AREA, BEGAMPUR KHATOLA ROAD, GURGAON-122001	0124-4030247,248, 4559700, 9911087173	
	LOCAL PUSH BUTTON STATION (NON FLAME PROOF)	16	B04	BCH	20/4, MATHURA ROAD, FARIDABAD, HARYANA-121006	0129-4293000	
	LOCAL PUSH BUTTON STATION (NON FLAME PROOF)	17	E1035	CANDS	J/202, ANSA INDUSTRIAL ESTATE, SAKI VIHAR ROAD, SAKINAKA, ANDHERI (EAST), MUMBAI-72	022-28570858	
	LOCAL PUSH BUTTON STATION (NON FLAME PROOF)	18	S01	SIEMENS	RC-IN I S NR DEL AREA, JIL BUILDING, TOWER-B, PLOT NO. 78, SECTOR 18, GURGAON-122015, INDIA	0124-2842000, 9873424331 amit.bhadauria@siemens.com	

ITEM CODE	ITEM/SERVICE DESCRIPTION	SL NO.	VENDOR CODE	VENDOR NAME	ADDRESS	PHONE	REMARKS
	LOCAL PUSH BUTTON STATION (NON FLAME PROOF)	19	S03	SCHNEIDER ELECTRIC INDIA PVT. LTD.	9TH FLOOR, BLDG. NO. 10, TOWER-C, DLF CYBER CITY, PH-II, GURGAON-122002	0124-3940400	
	LOCAL PUSH BUTTON STATION (NON FLAME PROOF)	20	E1143	TECKNIC CONTROLS	703, MADHAVA, BANDRA, KURLA COMPLEX, BANDRA EAST, MUMBAI, MAHARASHTRA 400051	022-42532507/00 022-24451648	
	LOCAL PUSH BUTTON STATION (NON FLAME PROOF)	21	E1148	UNITED ELECTRIC	97 UDYOG VIHAR PHASE-I, GURGAON 122015, HARYANA	124 4002970 72	
	LOCAL PUSH BUTTON STATION (NON FLAME PROOF)	22	SRC01	M/s Shrenik & Co.	39A/3, PANCHRATNA INDUSTRIAL ESTATE, SARKHEJ-BAVLA ROAD, CHANGODAR, AHMEDABAD – 382 213		
ES48	LOCAL PUSH BUTTON STATION (FLAME PROOF)						
	LIGHTING PANEL (FLAME PROOF)	1	E1206	BALIGA ELECTRICALS	63A,CP RAMASWAMY ROAD, PB NO 6910, CHENNAI-600018	44-24995505,22680990-4	
ES49	LIGHTING PANEL (FLAME PROOF)	2	SS01	SUDHIR SWITCHGEAR	305/6, APEEJAY HOUSE, 130, BOMBAY SAMACHAR MARG, MUMBAI - 400 023. INDIA	Telephone Nos. : 40460000 (100 lines) Fax Nos. : ++-91-22-22049381 Email : md@sudhirswitchgears.com ; works@sudhirswitchgears.com ;scud@vsnl.com	
	LIGHTING PANEL (NON FLAME PROOF)	1		Control Devices	Kolkata		
	LIGHTING PANEL (NON FLAME PROOF)	2		Jasper	Noida		
	LIGHTING PANEL (NON FLAME PROOF)	3		Havells	Faridabad		
	LIGHTING PANEL (NON FLAME PROOF)	4		Novateur Electrical & distribution systems	Murthal		
	LIGHTING PANEL (NON FLAME PROOF)	5		Avaid Technovator	Manesar		
	LIGHTING PANEL (NON FLAME PROOF)	6		Switching Circuits	Kolkata		
	LIGHTING PANEL (NON FLAME PROOF)	7		Hindustan Control & equipment Ltd	kolkata		
	LIGHTING PANEL (NON FLAME PROOF)	8		Maktel	Vadodara		
	LIGHTING PANEL (NON FLAME PROOF)	9		Jakson	Greater Noida		
	LIGHTING PANEL (NON FLAME PROOF)	10		Vidyut Control	Gaziabad		
	LIGHTING PANEL (NON FLAME PROOF)	11		Adlec Power	Rohad (Jhajjar)		
	LIGHTING PANEL (NON FLAME PROOF)	12		Conquerent Control System	Manesar		
	LIGHTING PANEL (NON FLAME PROOF)	13		Control & Schematics	Hyderabad		
	LIGHTING PANEL (NON FLAME PROOF)	14		Positronics	Vadodara		
	LIGHTING PANEL (NON FLAME PROOF)	15		L&T	Mumbai / Coimbatore/ Ahmednagar		
	LIGHTING PANEL (NON FLAME PROOF)	16		GE	Bangalore		
ES50	LIGHTING PANEL (NON FLAME PROOF)	17		C&S Electric	Noida / HARIDWAR		
	LIGHTING PANEL (NON FLAME PROOF)	18		Schneider	Nasik		
	LIGHTING PANEL (NON FLAME PROOF)	19		Pyrotech	Udaipur		
	LIGHTING PANEL (NON FLAME PROOF)	20		Siemens	Kalwa		
	LIGHTING PANEL (NON FLAME PROOF)	21		Tricolite	Sahibabad/ Manesar		
	LIGHTING PANEL (NON FLAME PROOF)	22		Nitya Electrocontrols	Noida		
	LIGHTING PANEL (NON FLAME PROOF)	23		Saravana Switchgear	Bengaluru		
	LIGHTING PANEL (NON FLAME PROOF)	24	E1091	MIKA ENGINEERS	D'-101, DHEERAJ HERITAGE RESIDENCY II, SHASTRI NAGAR, SANTACRUZ (W), MUMBAI 400 054.	Director : Mr. Asgar Karimi E-mail : mika@mtnl.net.inTelfax : 022-26610081/82/83/84Tel : 02527-249066/70 Cell : 099230	**These are BHEL approved sources. Acceptance of these shall be subject to customer approval.**
	LIGHTING PANEL (NON FLAME PROOF)	25	F04	ELEXPRO ELECTRICALS PVT/ LTD.	C 1/27 & 37 GIDC KABILPORE NAVSARI-396424	02637-265140, Mr. Jssk kumar	
	LIGHTING PANEL (NON FLAME PROOF)	26	KM1	KMG ATOZ SYSTEMS	"ATOZ HOUSE" C-49, SECTOR-81, GAUTAM BUDDH NAGAR, NOIDA – 201 305 U. P. (INDIA)	Tel : +91-120-4207920 Fax : +91-120-4207921, 4327958 Phone:098 10 802710	
	LIGHTING PANEL (NON FLAME PROOF)	27	E05	UNILEC ENGINEERS PVT. LTD.	BEHRAMPUR INDUSTRIAL AREA, BEGAMPUR KHATOLA ROAD, GURGAON-122001	0124-4030247,248, 4559700, 9911087173	

ITEM CODE	ITEM/SERVICE DESCRIPTION	SL NO.	VENDOR CODE	VENDOR NAME	ADDRESS	PHONE	REMARKS
	LIGHTING PANEL (NON FLAME PROOF)	28	ACE01	Adroit Control Engineers Pvt.Ltd.	M/S ADROIT CONTROL ENGINEERS PVT.LTD. PLOT-3, KRISHNA INDL. AREA, SECTOR-25 FARIDABAD – 121004	011-47600700, 0129-4251400	
	LIGHTING PANEL (NON FLAME PROOF)	29	MIL01	MILESTONE SWITCHGEARS PVT. LTD.	MILESTONE SWITCHGEARS PVT. LTD. 97, UDYOG VIHAR, PHASE-1, GURGEON HARYANA - 122016	Phone Nos.: 0124-4994900 (30 Lines) Fax: 0124-4002973 Email:	
ES51	MCB	1	E1088	MDS SWITCHGEAR LTD	314-317SHAH NAHAR ESTATE	011 - 25793021	
	MCB	2	E1068	INDO ASIAN	B-24, PHASE - II , NOIDA - 201305, U.P.	120-3042222	
	MCB	3	S03	SCHNEIDER ELECTRIC INDIA PVT. LTD.	9TH FLOOR, BLDG. NO. 10, TOWER-C, DLF CYBER CITY, PH-II, GURGAON-122002	0124-3940400	
	MCB	4	E1120	S&S POWER SWITCHGEAR LTD,	NEW NO. 67, OLD NO. 19, DR. RANGA ROAD, MYLAPORE, CHENNAI - 600004	044 - 24988056, 044 - 24988057, 044 - 24988058	
ES52	MCC (FIXED TYPE)	1	S02	SPACEAGE SWITCHGEARS LTD.	68 & 13-A INDUSTRIAL DEVELOPMENT COLONY, MEHRAULI ROAD GURGAON, HARYANA-122001	0124-2302711, 4085091	
	MCC (FIXED TYPE)	2	A01	ASSOCIATED SWGR & PROJ.LTD.	C-10, UPSIDC, INDUSTRIAL AREA, SITE-IV, KASNA ROAD, GREATER NOIDA-201306	0120-4294618,19,20 Asplho@gmail.com	
	MCC (FIXED TYPE)	3	B04	BCH	20/4, MATHURA ROAD, FARIDABAD, HARYANA-121006	0129-4293000	
ES53	LV MOTORS (NON FLAME PROOF)	1	A24	ABB	14, MATHURA ROAD, FARIDABAD, HARYANA-121003	0129-2567580, 09871799449	
	LV MOTORS (NON FLAME PROOF)	2	E1027	BHARAT BIJLEE LTD.	BHARAT BIJLEE LIMITED, 1ST FLOOR, 7-B, RAJINDRA PARK, PUSA ROAD, NEW DELHI - 110 060.	Tel.: + 91 (11) 25816931-33, 35 & 36| DT: +91 25724318 Fax: + 91 (11) 25819640| M:+ 91	
	LV MOTORS (NON FLAME PROOF)	3	C02	CROMPTON GREAVES	3RD FLOOR, EXPRESS BUILDING,9-10, BAHADUR SHAH ZAFAR MARG, NEAR ITO CROSSING,NEW DELHI-110002, INDIA	91 11 23460700 - 999 Sunil.Das@cgglobal.com	
	LV MOTORS (NON FLAME PROOF)	4	A35	GE-POWER	KAMAK TOWER, 3RD FLOOR, PLOT NO. 12-A, TVK INDUSTRIAL ESTATE, EKKADUTHANGAL, GUINDY, CHENNAI-600032	044-49681447	
	LV MOTORS (NON FLAME PROOF)	5	K01	KIRLOSKAR ELECTRIC CO LTD.	P.O. BOX 5555 , MALLESWARAM WEST ,BANGALORE 560055	Tel: +91-80-23374865 Fax: +91-80-23377706	
	LV MOTORS (NON FLAME PROOF)	6	L04	LAXMI HYDRAULICS PVT. LTD	129/130, INDUSTRIAL ESTATE PATIL NAGAR, HOTGI ROAD SOLAPUR-413003, MAHARASHTRA	0217- 2357001-005	APPROVED UPTO 200KW
	LV MOTORS (NON FLAME PROOF)	7	M01	MARATHON	MARATHON ELECTRIC INDIA PRIVATE LTD.SECTOR - 11, MODEL TOWN, FARIDABAD - 121006	Ph: +91-129-2286421, 2265340, 4006601 to 4006610	
	LV MOTORS (NON FLAME PROOF)	8	A35	NGEF	POCKET NO.10, FLAT NO. 37 & 38, EXPANDABLE DDA FLATS, NASIRPUR DWARKA, PHASE-I NEW	Ph: (011) 2539 7763	
	LV MOTORS (NON FLAME PROOF)	9	E1115	RAJINDRA ELECT INDUSTRIES	14 SHAH IND.ESTATE VEERA DESAI RD,ANDHERI(W) MUMBAI-400053	91-22-26730823, 26730789; 91)-(22)-26730154	
	LV MOTORS (NON FLAME PROOF)	10	S01	SIEMENS	RC-IN I S NR DEL AREA, JIL BUILDING, TOWER-B, PLOT NO. 78, SECTOR 18, GURGAON-122015, INDIA	0124-2842000, 9873424331 amit.bhadauria@siemens.com	
	LV MOTORS (NON FLAME PROOF)	11	HM06	HAVELLS INDIA LIMITED	Plot No. SP 181-189, Industrial Area Phase-II, Neemrana, Dist. Alwar, Rajasthan-301705, India	M: 9644355595 Mr. Kapil Jain (L): +91120-4772317 (Kapil Jain <Kapil.Jain@havells.com>)	APPROVED UPTO 200KW
ES54	LV MOTORS (FLAME PROOF)	1	E1115	RAJINDRA ELECT INDUSTRIES	14 SHAH IND.ESTATE VEERA DESAI RD,ANDHERI(W) MUMBAI-400053	91-22-26730823, 26730789; 91)-(22)-26730154	
ES55	MODULAR SWITCH BOARD	1	E1012	ANCHOR	STEEL HOUSE, B WING, PLOT NO. 24, MAHAL INDUSTRIAL ESTATE, MAHAKALI CAVES ROAD, NEAR PAPER BOX, ANDHERI (E), MUMBAI, MAHARASHTRA.- 400093	022-30418888.	
	MODULAR SWITCH BOARD	2	F04	ELEXPRO ELECTRICALS PVT/ LTD.	C 1/27 & 37 GIDC KABILPORE NAVSARI-396424	02637-265140, Mr. Jssk kumar	
	MODULAR SWITCH BOARD	3	HI01	HAVELLS INDIA LIMITED	QRG TOWERS , 2D SECTOR-126, NOIDA- 201301	GIRISH KUMAR SHRIVASTAVA +91-9810528922	
ES56	OIL TEMP INDICATOR	1	E1101	PERFECT CONTROLS	BLOCK NO. 7, NORTH ROAD,WEST C.I.T. NAGAR,CHENNAI - 600035, INDIA.	Phone: (91-44) 24341043, 24330387, 42867651 Fax: (91-44) 24345075	
	OIL TEMP INDICATOR	2	E1105	PRECIMEASURE	M/S. PRECIMEASURE CONTROLS PVT. LTD. 168/C, INDUSTRIAL SUBURB, PEENYA 3RD PHASE, BANGALORE - 560058. KARNATAKA, INDIA	Phone EPABX: +91-80-42602702. Fax: +91-80-41552205 E-mail: info@precimeasure.com	
ES57	PROTECTION - RELAYS (PNUEMATIC)	1	S01	SIEMENS	RC-IN I S NR DEL AREA, JIL BUILDING, TOWER-B, PLOT NO. 78, SECTOR 18, GURGAON-122015, INDIA	0124-2842000, 9873424331 amit.bhadauria@siemens.com	
	PROTECTION - RELAYS (PNUEMATIC)	2	S03	SCHNEIDER ELECTRIC INDIA PVT. LTD.	9TH FLOOR, BLDG. NO. 10, TOWER-C, DLF CYBER CITY, PH-II, GURGAON-122002	0124-3940400	
	PROTECTION - RELAYS (PNUEMATIC)	3	A35	GE-MULTILINE, GE INDIA INDUSTRIAL PVT. LTD.	NO. 90- B, ELECTRONICS CITY, HOSUR ROAD, BENGALURU - 560016, KARNATAKA	(080) 41314617, 9945478935	
	PROTECTION - RELAYS (PNUEMATIC)	4	SC01	SCHWEITZER ENGG. LAB (SEL)	406, BHIKAJI CAMA BHAVAN, BHIKAJI CAMA PLACE, BHIKAJI CAMA PLACE, MOHAMMADPUR, RK PURAM, NEW DELHI, DL 110066	011 4152 7899	
	PROTECTION - RELAYS (PNUEMATIC)	5	C01	C&S ELECTRIC LTD.	222, OKHLA IND. ESTATE, PH-III, NEW DELHI-110020	011-3088 7520-29	
	PROTECTION - RELAYS (PNUEMATIC)	6	G01	ALSTOM LTD	A-7, SEC-65, NOIDA	0120-479 0000	
	PROTECTION - RELAYS (PNUEMATIC)	7	A24	ABB	14, MATHURA ROAD, FARIDABAD, HARYANA-121003	0129-2567580, 09871799449	
	PROTECTION - RELAYS (PNUEMATIC)	8	C01	AVK-SEG & CONTROLS(I) LTD	C-60,NOIDA PHASE-II	6918834-37	
	PROTECTION - RELAYS (NUMERICAL)	1	S01	SIEMENS	RC-IN I S NR DEL AREA, JIL BUILDING, TOWER-B, PLOT NO. 78, SECTOR 18, GURGAON-122015, INDIA	0124-2842000, 9873424331 amit.bhadauria@siemens.com	

ITEM CODE	ITEM/SERVICE DESCRIPTION	SL NO.	VENDOR CODE	VENDOR NAME	ADDRESS	PHONE	REMARKS
ES58	PROTECTION - RELAYS (NUMERICAL)	2	S03	SCHNEIDER ELECTRIC INDIA PVT. LTD.	9TH FLOOR, BLDG. NO. 10, TOWER-C, DLF CYBER CITY, PH-II, GURGAON-122002	0124-3940400	
	PROTECTION - RELAYS (NUMERICAL)	3	A35	GE-MULTILINE, GE INDIA INDUSTRIAL PVT. LTD.	NO. 90- B, ELECTRONICS CITY, HOSUR ROAD, BENGALURU - 560016, KARNATAKA	(080) 41314617, 9945478935	
	PROTECTION - RELAYS (NUMERICAL)	4	SC01	SCHWEITZER ENGG. LAB (SEL)	406, BHIKAJI CAMA BHAVAN, BHIKAJI CAMA PLACE, BHIKAJI CAMA PLACE, MOHAMMADPUR, RK PURAM, NEW DELHI, DL 110066	011 4152 7899	
ES59	RECEPTACLES - DECORATIVE	1	E1012	ANCHOR	STEEL HOUSE, B WING, PLOT NO. 24, MAHAL INDUSTRIAL ESTATE, MAHAKALI CAVES ROAD, NEAR PAPER BOX, ANDHERI (E), MUMBAI, MAHARASHTRA.- 400093	022-30418888.	
	RECEPTACLES - DECORATIVE	2	F04	ELEXPRO ELECTRICALS PVT/ LTD.	C 1/27 & 37 GIDC KABILPORE NAVSARI-396424	02637-265140, Mr. Jssk kumar	
	RECEPTACLES - DECORATIVE	3	B05	BAJAJ ELECTRICALS	BAJAJ ELECTRICALS LTD. ENGINEERING & PROJECTS BU (NORTH) 3rd FLOOR, GULMOHARHOUSE, COMMUNITY CENTRE 161/B-4, GAUTAM NAGAR, YUSUF SARAI NEW DELHI – 110049	CONTACT PERSON : Mr. S. SREEMANY. SR. MANAGER (PROJECTS) CONTACT DETAILS : (+91) 9871025705. MAIL ID : srabans@bajajelectricals.com;	
	RECEPTACLES - DECORATIVE	4	A03	AJMERA INDUSTRIES & ENGG. WORKS	AJMERA INDL. AND ENGG. WORKS. AJMERA HOUSE, A-61 / KHAIRANE MIDC. , TTC INDL. AREA, NAVI MUMBAI – 400705.	Tel : 022 27620299 / 97 / 96 'mail@ajmera.net	
ES60	RESISTOR FOR DC STARTERS	1	B04	BCH	20/4, MATHURA ROAD, FARIDABAD, HARYANA-121006	0129-4293000	
	RESISTOR FOR DC STARTERS	2	C01	C&S ELECTRIC LTD.	222, OKHLA IND. ESTATE, PH-III, NEW DELHI-110020	011-3088 7520-29	
	RESISTOR FOR DC STARTERS	3	E1119	RSI	60,IND.DEV.COLONY, MEHRAULI ROAD, GURGAON-122001	91 - 124 - 2333442	
	RESISTOR FOR DC STARTERS	4	S04	SPEED-O-CONTROL	C-16, NAND JYOT INDUSTRIAL ESTATE, SAFED POOL, ANDHERI-KURLA ROAD, SAFED POOL, MAGAN NATHURAM RD, SHIVAJI NAGAR, SAKINAKA, MUMBAI, MAHARASHTRA 400072	022 2851 8514	
	RESISTOR FOR DC STARTERS	5	E1137	SUSHIL ENGG CORP.	D-7, GHATKOPAR INDUSTRIAL ESTATE, OFF LBS MARG, GHATKOPAR (WEST), AMRUT NAGAR RD, AMRUT NAGAR, GHATKOPAR WEST, MUMBAI, MAHARASHTRA 400086	022 2500 7976	
ES61	SWITCH BOX	1	E1012	ANCHOR	STEEL HOUSE, B WING, PLOT NO. 24, MAHAL INDUSTRIAL ESTATE, MAHAKALI CAVES ROAD, NEAR PAPER BOX, ANDHERI (E), MUMBAI, MAHARASHTRA.- 400093	022-30418888.	
	SWITCH BOX	2	F04	ELEXPRO ELECTRICALS PVT/ LTD.	C 1/27 & 37 GIDC KABILPORE NAVSARI-396424	02637-265140, Mr. Jssk kumar	
	SWITCH BOX	3	B05	BAJAJ ELECTRICALS	BAJAJ ELECTRICALS LTD. ENGINEERING & PROJECTS BU (NORTH) 3rd FLOOR, GULMOHARHOUSE, COMMUNITY CENTRE 161/B-4, GAUTAM NAGAR, YUSUF SARAI NEW DELHI – 110049	CONTACT PERSON : Mr. S. SREEMANY. SR. MANAGER (PROJECTS) CONTACT DETAILS : (+91) 9871025705. MAIL ID : srabans@bajajelectricals.com;	
	SWITCH BOX	4	A03	AJMERA INDUSTRIES & ENGG. WORKS	AJMERA INDL. AND ENGG. WORKS. AJMERA HOUSE, A-61 / KHAIRANE MIDC. , TTC INDL. AREA, NAVI MUMBAI – 400705.	Tel : 022 27620299 / 97 / 96 'mail@ajmera.net	
	SWITCH BOX	5	SB02	S.B. ELECTRICAL ENGINEERING CORPORATION	03, SARDAR GRIHA BUILDING, LOHAR CHAWAL, MUMBAI-400002	022- 22069831; 022-66637259	
ES62	TERMINAL BLOCKS	1	C01	WAGO-CONTROLS	C 27, GREATER NOIDA, SECTOR 58, C BLOCK, SECTOR 58, NOIDA, UTTAR PRADESH 201307	0120-2580409/10	
	TERMINAL BLOCKS	2	E1038	CONNECT WELL	309A/4, 3RD FLOOR, KALKAJI, OKHLA IND AREA PH-2, GOVINDPURI, NEW DELHI, DL 110019	9811881085 09871419996 011-65908877	
	TERMINAL BLOCKS	3	E1047	ELMEX CONTROLS PVT. LTD.	12,G.I.D.C.ESTATE,MUKARPURA ROAD,VADODARA-390010	9374631074	
	TERMINAL BLOCKS	4	E1050	ESSEN DEINKI	FLAT NO. 502, SKYLINE HOUSE 85, NEHRU PLACE NEW DELHI	011-26217060	
	TERMINAL BLOCKS	5	E1142	TECHNOPLAST	OPP.I.M.INTER COLLEGE, BEGUM SARAI KHURD ROAD, AMROHA - 244221, U.P.	PH:- 05922 264006 CELL NO:- 9012676000, 9319520799, 9319582467	
	TERMINAL BLOCKS	6	PME-01	M/s PHOENIX MECANO LTD.,	388 BHARE, TALUKA MULSHI, POST GHOTAWADE, PIRANGOOT, INDUSTRIAL AREA, PUNE-412115	TEL.- +912066745000 Awasthi(09971119006) Tel: ++91 20 6674 5103, Mobile: +91 90499 95985, Fax: ++91 20 6674 5126 contact person : Vishwa bandhu E-mail:d.gupta@pmipl-online.com ;admin@pmipl-online.com	
	TERMINAL BLOCKS	7	E1050	ESSEN DEINKI	FLAT NO. 502, SKYLINE HOUSE 85, NEHRU PLACE NEW DELHI	011-26217060	

ITEM CODE	ITEM/SERVICE DESCRIPTION	SL NO.	VENDOR CODE	VENDOR NAME	ADDRESS	PHONE	REMARKS
ES63	TIMERS - PNEUMATIC	1	B04	BCH	20/4, MATHURA ROAD, FARIDABAD, HARYANA-121006	0129-4293000	
	TIMERS - PNEUMATIC	2	G01	ALSTOM LTD	A-7, SEC-65, NOIDA	0120-479 0000	
	TIMERS - PNEUMATIC	3	L01	LK (Formerly L&T)	Lauritz Knudsen Electrical & Automation A/600, SHIL – Mahape Road, TTC Industrial Area, MIDC Thane, Mumbai, Maharashtra 400710	Pranjal Tyagi, Pranjal.Tyagi@lk-ea.com, Mobile - 8976907537, Telephone: +91 22 69327800	
	TIMERS - PNEUMATIC	4	E1144	TELEMECHANIQUE/ SCHNEIDER ELECTRIC INDIA PVT. LTD.	9TH FLOOR, BLDG. NO. 10, TOWER-C, DLF CYBER CITY, PH-II, GURGAON-122002	0124-3940400	TAKEN OVER BY SCHNEIDER
	TIMERS - PNEUMATIC	5	S03	SCHNEIDER ELECTRIC INDIA PVT. LTD.	9TH FLOOR, BLDG. NO. 10, TOWER-C, DLF CYBER CITY, PH-II, GURGAON-122002	0124-3940400	
	TIMERS - PNEUMATIC	6	E01	ELECTRONIC AUTOMATION PVT. LTD.	20, KHB INDUSTRIAL AREA YELAHANKA BANGLORE-560064	080 -28567561 / 080 -28567562 / 080 -42802345	
ES64	TIMERS - ELECTRONIC	1	E1050	ESSEN DEINKI	FLAT NO. 502, SKYLINE HOUSE 85, NEHRU PLACE NEW DELHI	011-26217060	
ES65	TRANSDUCERS	1	E1021	AUTOMATIC ELECTRIC LTD.	ADDRESS : 96 AB LONAVLA INDUSTRIAL ESTATE NANGARGAON, LONAVLA-410401	Phone : +91 2114323665 Fax : +91 2114273482	
	TRANSDUCERS	2	E1202	SOUTHERN TRANSDUCERS	INTERTECH B-83, FLATTED FACTORY COMPLEX, NEAR MODI MILLS, OKHLA, NEW DELHI-110020	Mr. Gurmohit Singh 011-41020365 / 9891402128	
ES66	WINDING TEMP INDICATOR	1	E1101	PERFECT CONTROLS	OFFICE ADDRESS: 7, NORTH ROAD,WEST C.I.T. NAGAR,CHENNAI - 600035, INDIA.	Phone: (91-44) 24341043, 24330387, 42867651;Fax: (91-44) 24345075	
	WINDING TEMP INDICATOR	2	E1105	PRECIMEASURE	M/S. PRECIMEASURE CONTROLS PVT. LTD. 168/C, INDUSTRIAL SUBURB, PEENYA 3RD PHASE, BANGALORE - 560058. KARNATAKA, INDIA	Phone EPABX: +91-80-42602702. Fax: +91-80-41552205 E-mail: info@precimeasure.com	
ES67	RECEPTACLE (FLAME PROOF)	1	E1206	BALIGA ELECTRICALS	63A,CP RAMASWAMY ROAD, PB NO 6910, CHENNAI-600018	44-24995505,22680990-4	
	RECEPTACLE (FLAME PROOF)	2	SS01	SUDHIR SWITCHGEAR	305/6, APEEJAY HOUSE, 130, BOMBAY SAMACHAR MARG, MUMBAI - 400 023. INDIA	Telephone Nos. : 40460000 (100 lines) Fax Nos. : ++-91-22-22049381 Email : md@sudhirswitchgears.com ; works@sudhirswitchgears.com ; scud@vsnl.com	
	RECEPTACLE (FLAME PROOF)	3	FFP01	FCG FLAME PROOF CONTROL GEAR	A1/53, SHAH & NAHAR INDUSTRIAL ESTATE, SITARAM JADHAV ROAD, LOWER PAREL (W), MUMBAI-400 013	Mr. N. G. Patel CMD Office No: +91-22-43443200 Fax No: +91-22-24960313	
ES68	RECEPTACLE (NON FLAME PROOF)	1	A03	AJMERA INDUSTRIES & ENGG. WORKS	AJMERA INDL. AND ENGG. WORKS. AJMERA HOUSE, A-61 / KHAIRANE MIDC. , TTC INDL. AREA, NAVI MUMBAI – 400705.	Tel : 022 27620299 / 97 / 96 'mail@ajmera.net	
	RECEPTACLE (NON FLAME PROOF)	2	C02	CROMPTON GREAVES	3RD FLOOR, EXPRESS BUILDING,9-10, BAHADUR SHAH ZAFAR MARG, NEAR ITO CROSSING,NEW DELHI-110002, INDIA	91 11 23460700 - 999 'Sunil.Das@cgglobal.com	
	RECEPTACLE (NON FLAME PROOF)	3	E1207	CYCLO ELECTRIC DEVICE & SERV.CO.	: A-3, NEAR ANTHEM BIOSCIENCE, KSSIDC INDUSTRIAL AREA, BOMMASANDRA, BOMMASANDRA INDUSTRIAL AREA, BANGALORE, KARNATAKA 560099	Mr. H.Jaishanker +919845039081, 080 - 27833102 , 080 - 27833103 : +91 80 41460985 'cycloelectric@gmail.com	
	RECEPTACLE (NON FLAME PROOF)	4	B04	BCH	20/4, MATHURA ROAD, FARIDABAD - 121006, HARYANA, INDIA	0(129)-4063000, 9015800189(Ramesh Giri) 'ramesh.giri@bchindia.com	
	RECEPTACLE (NON FLAME PROOF)	5	B02	BEST & CROMPTON	BEST & CROMPTON ENGINEERING LTD 28C, AMBATTUR INDUSTRIAL ESTATE (NORTH) AMBATTUR, CHENNAI - 600 098	Ph : +91 44 4551 4724 , MRKT DGM Mr. VI Raj:- 9840593411 'bestcromptonviraj@gmail.com	
ES69	EMERGENCY LIGHTING UNIT (FIXED & PORTABLE TYPE)- NON FLAME PROOF	1	B05	BAJAJ ELECTRICALS	BAJAJ ELECTRICALS LTD. ENGINEERING & PROJECTS BU (NORTH) 3rd FLOOR, GULMOHARHOUSE, COMMUNITY CENTRE 161/B-4, GAUTAM NAGAR, YUSUF SARAI NEW DELHI – 110049	CONTACT PERSON : Mr. S. SREEMANY. SR. MANAGER (PROJECTS) CONTACT DETAILS : (+91) 9871025705. MAIL ID : srabans@bajajelectricals.com	
	EMERGENCY LIGHTING UNIT (FIXED & PORTABLE TYPE)- NON FLAME PROOF	2	PEP05	PROLITE AUTOGLO LIMITED,	PROLITE AUTOGLO LTD 25 SINGH INDUSTRIAL ESTATE NO. 3, RAM MANDIR ROAD., GOREGAON (W), MUMBAI, MAHARASHTRA 400104, INDIA	022-67868100 sales@prolite.com	
ES70	EMERGENCY LIGHTING UNIT (FIXED & PORTABLE TYPE)- FLAME PROOF	1					
ES71	24V SUPPLY MODULE WITH COMPLETE ACCESSORIES	1	E1103	POWER PACK ENTERPRISES	POWER PACK ENTERPRISES MR. NEHAL SHAH / MR. SHARAD SHAH (PARTNER) NO. 3, JAYSHREE SADAN, 1ST FLOOR, OLD NAGARDAS ROAD, ANDHERI EAST MUMBAI - 400069, MAHARASHTRA, INDIA	Call Us:08447573761 Mobile: +(91)-9821787821 +(91)-9821035604	
	24V SUPPLY MODULE WITH COMPLETE ACCESSORIES	2	E1066	INDCOIL	ADDRESS: PLOT NO. A- 150/ 151, 23RD U ROAD, WAGLE ESTATE, THANE WEST, CST RD, FRIENDS COLONY, HALLOW PUL, KURLA WEST, MUMBAI, MAHARASHTRA 400070	Phone:022 2583 8305	
	24V SUPPLY MODULE WITH COMPLETE ACCESSORIES	3	AIE01	Ames Impex Electricals Pvt. Ltd	C-1B/1207, PHASE IV, GIDC NARODA, AHMEDABAD, GUJARAT 382330	Phone:079 2282 1648	

ITEM CODE	ITEM/SERVICE DESCRIPTION	SL NO.	VENDOR CODE	VENDOR NAME	ADDRESS	PHONE	REMARKS
ES72	ENERGY METER (ANALOG)	1	B07	BHEL (EDN)	MYSORE ROAD,BANGALORE-560026	080-26998500	
	ENERGY METER (ANALOG)	2	E1129	SIMCO ENGG. LTD	NO. 126, K ROAD, TIRUCHIRAPPALLI -620001, TAMIL NADU	Mr. Madaswamy Muthu +(91)-(431)-4046223 +(91)-(431)-4046210 +(91)-9786600915	
	ENERGY METER (ANALOG)	3	R01	RISHABH INST.PVT LTD	RISHABH INSTRUMENTS PVT. LTD. F-31, MIDC, SATPUR NASHIK - 422007 MAHARASHTRA INDIA	marketing@rishabh.co.in 91-253 2202202/203 Fax: 91 253 2351064	
	ENERGY METER (ANALOG)	4	E1009	AUTOMATIC ELECTRIC LTD.	96 AB LONAVLA INDUSTRIAL ESTATE NANGARGAON, LONAVLA-410401	Phone : +91 2114323665 Fax : +91 2114273482	
	ENERGY METER (ANALOG)	5	CON1	CONZERVE SYSTEMS PVT. LTD.(SCHNEIDER)	87, 1ST FLOOR INDUSTRIAL DEVELOPMENT COLONY (IDC) MEHRAULI ROAD, UGURGAON 122001 HARYANA, INDIA.	4268899, 9910695701	
ES73	ENERGY METER (DIGITAL)	1	CON1	CONZERVE SYSTEMS PVT. LTD.(SCHNEIDER)	87, 1ST FLOOR INDUSTRIAL DEVELOPMENT COLONY (IDC) MEHRAULI ROAD, UGURGAON 122001 HARYANA, INDIA.	4268899, 9910695701	
	ENERGY METER (DIGITAL)	2	NK09	M/s Newtek Electricals	M-90, M.I.D.C, Waluj, Aurangabad 431136, Maharashtra, India	Tel/Fax: +91 240 2551555 E-mail: mkt.north@newtekelectricals.com, sales@newtekelectricals.com Mr Sanjeev Aggarwal (9958897890)	
ES74	AMMETER	1	E1009	AUTOMATIC ELECTRIC LTD.	96 AB LONAVLA INDUSTRIAL ESTATE NANGARGAON, LONAVLA-410401	Phone : +91 2114323665 Fax : +91 2114273482	
	AMMETER	2	R01	RISHABH INST.PVT LTD	RISHABH INSTRUMENTS PVT. LTD. F-31, MIDC, SATPUR NASHIK - 422007 MAHARASHTRA INDIA	marketing@rishabh.co.in 91-253 2202202/203 Fax: 91 253 2351064	
	AMMETER	3	NK09	M/s Newtek Electricals	M-90, M.I.D.C, Waluj, Aurangabad 431136, Maharashtra, India	Tel/Fax: +91 240 2551555 E-mail: mkt.north@newtekelectricals.com, sales@newtekelectricals.com Mr Sanjeev Aggarwal (9958897890)	
ES75	VOLTMETER	1	E1009	AUTOMATIC ELECTRIC LTD.	96 AB LONAVLA INDUSTRIAL ESTATE NANGARGAON, LONAVLA-410401	Phone : +91 2114323665 Fax : +91 2114273482	
		2	R01	RISHABH INST.PVT LTD	RISHABH INSTRUMENTS PVT. LTD. F-31, MIDC, SATPUR NASHIK - 422007 MAHARASHTRA INDIA	marketing@rishabh.co.in 91-253 2202202/203 Fax: 91 253 2351064	
	VOLTMETER	3	NK09	M/s Newtek Electricals	M-90, M.I.D.C, Waluj, Aurangabad 431136, Maharashtra, India	Tel/Fax: +91 240 2551555 E-mail: mkt.north@newtekelectricals.com, sales@newtekelectricals.com Mr Sanjeev Aggarwal (9958897890)	
ES76	MPCB	1	S03	SCHNEIDER ELECTRIC INDIA PVT. LTD.	9TH FLOOR, BLDG. NO. 10, TOWER-C, DLF CYBER CITY, PH-II, GURGAON-122002	0124-3940400	
	MPCB	2	L01	LK (Formerly L&T)	Lauritz Knudsen Electrical & Automation A/600, SHIL – Mahape Road, TTC Industrial Area, MIDC Thane, Mumbai, Maharashtra 400710	Pranjal Tyagi, Pranjal.Tyagi@lk-ea.com, Mobile - 8976907537, Telephone: +91 22 69327800	
	MPCB	3	S01	SIEMENS	RC-IN I S NR DEL AREA, JIL BUILDING, TOWER-B, PLOT NO. 78, SECTOR 18, GURGAON-122015, INDIA	0124-2842000, 9873424331 amit.bhadauria@siemens.com	
	MPCB	4	A35	GE-POWER	KAMAK TOWER, 3RD FLOOR, PLOT NO. 12-A, TVK INDUSTRIAL ESTATE, EKKADUTHANGAL, GUINDY, CHENNAI-600032	044-49681447	
	MPCB	5	S03	SCHNEIDER ELECTRIC INDIA PVT. LTD.	9TH FLOOR, BLDG. NO. 10, TOWER-C, DLF CYBER CITY, PH-II, GURGAON-122002	0124-3940400	
	MPCB	6	C01	C&S ELECTRIC LTD.	222, OKHLA IND. ESTATE, PH-III, NEW DELHI-110020	011-3088 7520-29	
ES77	MAGNETIC OIL GAUGE	1	E1134	SUKRUT UDYOG	9/1/A, ERANDAWANE, OPPOSITE MEHENDALE GARAGE, ERANDAWANE, GULAWANI MAHARAJ RD, SWAROOP SOCIETY, VAKIL NAGAR, ERANDWANE, PUNE, MAHARASHTRA 411004	020 2544 1726	
ES78	MULTIFUNCTION METER	1	CON1	CONZERVE SYSTEMS PVT. LTD./ SCHNEIDER ELECTRIC INDIA PVT. LTD.	87, 1ST FLOOR INDUSTRIAL DEVELOPMENT COLONY (IDC) MEHRAULI ROAD, GURGAON 122001 HARYANA, INDIA.	4268899, 9910695701	TAKEN OVER BY SCHNEIDER
	MULTIFUNCTION METER	2	NK09	M/s Newtek Electricals	M-90, M.I.D.C, Waluj, Aurangabad 431136, Maharashtra, India	Tel/Fax: +91 240 2551555 E-mail: mkt.north@newtekelectricals.com, sales@newtekelectricals.com Mr Sanjeev Aggarwal (9958897890)	
ES79	RCCB	1	C01	C&S ELECTRIC LTD.	222, OKHLA IND. ESTATE, PH-III, NEW DELHI-110020	011-3088 7520-29	
	RCCB	2	S03	SCHNEIDER ELECTRIC INDIA PVT. LTD.	9TH FLOOR, BLDG. NO. 10, TOWER-C, DLF CYBER CITY, PH-II, GURGAON-122002	0124-3940400	
	RCCB	3	S01	SIEMENS	RC-IN I S NR DEL AREA, JIL BUILDING, TOWER-B, PLOT NO. 78, SECTOR 18, GURGAON-122015, INDIA	0124-2842000, 9873424331 amit.bhadauria@siemens.com	
	RCCB	4	A35	GE-POWER	KAMAK TOWER, 3RD FLOOR, PLOT NO. 12-A, TVK INDUSTRIAL ESTATE, EKKADUTHANGAL, GUINDY, CHENNAI-600032	044-49681447	

ITEM CODE	ITEM/SERVICE DESCRIPTION	SL NO.	VENDOR CODE	VENDOR NAME	ADDRESS	PHONE	REMARKS
	RCCB	5	L01	LK (Formerly L&T)	Lauritz Knudsen Electrical & Automation A/600, SHIL – Mahape Road, TTC Industrial Area, MIDC Thane, Mumbai, Maharashtra 400710	Pranjal Tyagi, Pranjal.Tyagi@lk-ea.com, Mobile - 8976907537, Telephone: +91 22 69327800	
	RCCB	6	C02	CROMPTON GREAVES	RAIL TRANSPORTATION SYSTEMS,VANDANA BUILDING, 11, TOLSTOY MARG, TOLSTOY MARG, NEW DELHI, DL 110001	011 3041 6300	
ES80	PVC WIRES	BIS APPROVED MAKE					
ES81	PEDESTAL FAN & CEILING FAN	REPUTED MAKE					
ES82	EXIT SIGN (FLAME PROOF)	REPUTED MAKE					
ES83	EXIT SIGN (NON FLAME PROOF)	REPUTED MAKE					
ES84	LADDER	REPUTED MAKE					
ES85	HUME PIPE	REPUTED MAKE					
ES86	PHOTOELECTRIC SWITCH	REPUTED MAKE					
ES87	DICHORIC SPOT LIGHTING FIXTURE	REPUTED MAKE					
ES88	HAND LAMP UNIT	REPUTED MAKE					
ES89	LIGHTING DESIGNER	1	AT13	AVAIDS TECHNOVATORS PVT. LTD.	4A/58, SHANKAR ROAD, NEW DELHI-110060	Mr. Rajendra Panda M: 9910481854 (email: rajendra@avaids.com)	
	LIGHTING DESIGNER	2	BE13	BAJAJ ELECTRICALS LTD.	801 (8th floor), Rustomjee Aspire, Bhanu Shankar Yagnik Marg, Off Eastern Express Highway Sion (E), Mumbai 400022	Mr. S. SREEMANY. SR. MANAGER (PROJECTS) CONTACT DETAILS : (+91) 9871025705. (email: srabans@bajajelectricals.com)	
	LIGHTING DESIGNER	3	KS13	KELSATEK SOLUTIONS PVT. LTD.	50/1 4TH FLOOR, CHURCH STREET, BANGALORE-560001	Mr. S S Mudaliar Sr. VP M: 6380471362 (email: mudaliar@kelsatek.com)	
	LIGHTING DESIGNER	4	SE13	M/s SUMANAM ENGINEERING SERVICES CONSULTANT	1, ADITHYA, KOWDIAR, TRIVANDRUM 695003	Mr. Anshad S Phone: 471-2437588, (email: shaw@sumanam.org)	
	LIGHTING DESIGNER	5	SM13	SPAN MANUFACTURING COMPANY LTD	27 First Floor, Bhiku Building, Murari Ghag Marg, Prabhadevi, Mumbai-400025	Ms Surbhi Jindal M: 9811026321 (email: spanmanufacturing@gmail.com, info@dalighthub.com)	Lighting System designer only for FGD, R&M and Hydro projects
	LIGHTING DESIGNER	6	CL13	CITELUM INDIA PVT. LTD	Y-14A, GREEN PARK MAIN, NEW DELHI-110016	Mr. Satyabrata Meher M: 8155001095, (email: smeher@citelum.in)	Lighting System designer only for FGD, R&M and Hydro projects
	LIGHTING DESIGNER	7	SR13	M/s SURYA ROSHNI LTD	Padma Tower 1, Rajendra Place, New Delhi–110008	Mr. Saurabh Gupta 9999433167, (email: saurabh.gupta@surya.in), AKHILESH AGRAWAL (aagrawal@surya.in)	
	LIGHTING DESIGNER	8	HP13	M/s HPL ELECTRIC & POWER PVT. LTD.	WINDSOR BUSINESS PARK, B-1D, SECTOR-10 NOIDA-201301 (UP)	Name : Mr. Mahesh Sharma Designation: Sr. GM (HOD Projects) Email : msharma@hplindia.com Contact : 9818282236 Ashwani Kumar Mob-9971127370 Email: ashwani@hplindia.com	
	LIGHTING DESIGNER	9	ME13	M/s MIKA ENGINEERS.	Survey No.-47,Shed No.-2,Aghai,Shahapur-Wada Road, Village-Aghai, THANE , Pin 421601; MAHARASHTRA	Name : Mr. Deepak Kumar Nayak Email : deepak@mikaengineers.com Contact : 8976737543 Mr. Asgar B Karimi Mob-9820019739 Email: asgar@mikaengineers.com	
	LIGHTING DESIGNER	10	FED13	M/s. Forus Electric Pvt. Ltd.	M/s. Forus Electric Pvt. Ltd. B-313, Okhla Industrial Area, Phase-1, New delhi-110020	Mr. Amit Bharadwaj <amit.bharadwaj@foruselectric.com> M 8800508090, Mr. Uttam Goyal <uttam@foruselectric.com>	
	LIGHTING DESIGNER	11	US13	U. S. CONSULTANTS	U. S. CONSULTANTS C-47, SECOND FL. SECTOR -2, NOIDA - 201301	Mr. Uma Shankar Yadav (US Consultants Accounts <account@usconsultants.in>) M 9999200799	
	LIGHTING DESIGNER	12	PY06	Pyrotech Technologies Pvt. Ltd.	F-16, Road no. 3, Mewar industrial Area, Madri, Udaipur-313003 RJ(IN), Udaipur Industrial Area, Udaipur, Girwa, Rajasthan, India, 313003	Ms. Ritika Sharma (Asst Manager-Tender & Projects tenderpyrotech@gmail.com) M 9509245814	
ES90	VAF METER (DIGITAL)	1	NK09	M/s Newtek Electricals	M-90, M.I.D.C, Waluj, Aurangabad 431136, Maharashtra, India	Tel/Fax: +91 240 2551555 E-mail: mkt.north@newtekelectricals.com, sales@newtekelectricals.com Mr Sanjeev Aggarwal (9958897890)	
ES91	LED BASED HIGH INTENSITY AVIATION WARNING LIGHTS	1	INS1	M/s INSTA POWER LIMITED	Correspondence Address: M/s Insta Power Limited, S-19, Panch Shila Park, New-Delhi-110017 Manufacturing Unit: M/s Insta Power Limited, Khasra No. 103M, Raipur Industrial Area, Raipur, Bhagwanpur, Roorkee, Uttrakhand-247661	Manu Thakur (electrical1@instapower.com) Deepak Gupta (deepak.gupta@instapower.com) Abhijit R Vaish (abhijit.rai@instapower.com) Satyajit R Vaish (satyajit@instapower.com)	

ITEM CODE	ITEM/SERVICE DESCRIPTION	SL NO.	VENDOR CODE	VENDOR NAME	ADDRESS	PHONE	REMARKS
ES92	TRANSFORMER OIL	1	IO02	M/s IOCL	Address:(Marketing Division) UPSO-II, E-8, Sector-I, Noida-201301, UP Works Address: 1) LUBE BLENDING PLANT, NO 2, NEW ENNORE HIGH ROAD,TONDIARPET, CHENNAI - 600 081, TAMIL NADU, INDIA 2) LUBE BLENDING PLANT, 75/1, KARAJGAM, SILVASSA -396 230,UT OF DADRA & NAGAR HAVELI, INDIA 3) LUBE BLENDING PLANT, P-68 KARL MARX SARANI, PAHARPUR, KOLKATA-700043, WEST BENGAL, INDIA 4) LUBE BLENDING PLANT, T-20, MIDC, TALOJA, NAVI MUMBAI, RAIGAD, MAHARASHTRA, INDIA	Sumit A Nimkar GM (Lubes), UPSO II M: +91 98330 78765 Email: snimkar@indianoil.in, Harsh Govind Paunikar, 7503649649, paunikarhg@indianoil.in]	Technical limit (approved for IS:335 & IEC:60296 only)

Makes of sub-vendor and equipment/components mentioned in this list are indicative and shall be subject to CSPGCL/BHEL approval. The bidder may propose name of additional sub-vendors makes based on their experience, which will be subject to CSPGCL/BHEL approval. In case of non approval of same, bidder to select makes from the above mentioned list without any price implication.

DOCUMENTATION REQUIREMENT

DOCUMENTATION REQUIREMENT

DRAWINGS & DOCUMENTS TO BE SUBMITTED BY ALL THE BIDDERS ALONG WITH THE BID

Sl. No.	DOCUMENT TITLE
1	PQR CREDENTIALS
2	COMPLIANCE SHEET

DRAWINGS & DOCUMENTS TO BE SUBMITTED BY SUCCESSFUL BIDDER AFTER AWARD OF CONTRACT ALONG WITH SUBMISSION SCHEDULE

SUBMISSION SCHEDULE

Sl. No.	DVC DRG. NO.	BHEL DRG. NO.	DOCUMENT TITLE	Vendor submission (Days)*	BHEL Comment (Days)	Vendor submission (Days)#	BHEL & Customer comment/ approval (Days)	CATEGORY
1		PE-V0-530-558-E001	GA, TDS, BOM FOR LIGHTING FIXTURES,LAMPS & ACCESSORIES	28	8	14	18	PRIMARY
2		PE-V0-530-558-E003	MQP FOR LIGHTING FIXTURES	28	8	14	18	PRIMARY
3		PE-V0-530-558-E912	MQP FOR MISCELLANEOUS LIGHTING ITEMS	28	8	14	18	PRIMARY
4		PE-V0-530-558-E501	GA/SLD, SCHEME & DATA SHEET OF LIGHTING DISTRIBUTION BOARDS & WELDING DISTRIBUTION BOARDS	28	8	14	18	PRIMARY
5		PE-V0-530-558-E511	GA TDS, BOM, SLD SCHEME OF LIGHTING PANEL	28	8	14	18	PRIMARY
6		PE-V0-530-558-E902	MQP OF LIGHTING DISTRIBUTION BOARDS	28	8	14	18	PRIMARY
7		PE-V0-530-558-E507	GA, TDS, BOM OF LIGHTING TRANSFORMER	28	8	14	18	PRIMARY
8		PE-V0-530-558-E903	MQP FOR LIGHTING TRANSFORMER	28	8	14	18	PRIMARY
9		PE-V0-530-558-E902A	MQP FOR LIGHTING PANEL	28	8	14	18	PRIMARY
10		PE-V0-530-558-E601	GA, TDS, BOM, FOUNDATION DRAWINGS OF POLES	28	8	14	18	PRIMARY
11		PE-V0-530-558-E907	MQP OF POLES	28	8	14	18	PRIMARY
12		PE-V0-530-558-E513	MANDATORY SPARES FOR LIGHTING	After Approval of LLO Drawings	8	14	18	SECONDARY
13		PE-V0-530-558-E002	MOUNTING ARRANGEMENT OF LIGHTING FIXTURE IN FALSE CEILING AREA	28	8	14	18	SECONDARY
14		PE-V0-530-558-E034	MOUNTING ARRANGEMENT OF LIGHITNG FIXTURES OTHER THAN FALCE CEILING AREA	28	8	14	18	SECONDARY
15		PE-V0-530-558-E035	MOUNTING ARRANGEMENT OF MISC. ITEMS	28	8	14	18	SECONDARY
16		PE-V0-530-558-E004	TYPE TEST REPORT OF LIGHTING FIXTURES	Within 2 months from PO/ within 1 week of type test conduction (as applicable)				SECONDARY
17		PE-V0-530-558-E052	TYPE TEST REPORT OF MISC. ITEMS- LIGHTING SYSTEM					SECONDARY
18		PE-V0-530-558-E508	TYPE TEST REPORTS FOR LIGHTING DISTRIBUTION BOARDS					SECONDARY
19		PE-V0-530-558-E512	TYPE TEST REPORTS FOR LIGHTING PANELS					SECONDARY
20		PE-V0-530-558-E510	TYPE TEST REPORTS FOR LIGHTING TRANSFORMER					SECONDARY
21		PE-V0-530-558-E107	BILL OF MATERIAL	28	8	14	18	SECONDARY
22		PE-V0-530-558-E603	FIELD QUALITY PLAN OF POLES	28	8	14	18	SECONDARY
23		PE-V0-530-558-E606	BILL OF MATERIAL - POLES	28	8	14	18	SECONDARY
24		PE-V0-530-558-E605	INSTRUCTIONS FOR ERECTION OF POLES	28	8	14	18	SECONDARY
25		PE-V0-530-558-E606	SLD FOR LIGHTING SYSTEM INDICATING LOCATION OF LDBs & LPs	Within 1 week from approval of all LLOs	8	8	18	SECONDARY
26		PE-V0-530-558-E101	LDC & LLO FOR TG GROUND FLOOR	Within 2 weeks from the date of BHEL input drawing	8	8	18	SECONDARY
27		PE-V0-530-558-E102	LDC & LLO FOR TG MEZZANINE FLOOR	Within 2 weeks from the date of BHEL input drawing	8	8	18	SECONDARY
28		PE-V0-530-558-E103	LDC & LLO FOR TG OPERATING FLOOR	Within 2 weeks from the date of BHEL input drawing	8	8	18	SECONDARY
29		PE-V0-530-558-E104	LDC & LLO FOR TG DEAERATOR FLOOR	Within 2 weeks from the date of BHEL input drawing	8	8	18	SECONDARY
30		PE-V0-530-558-E105	LDC & LLO FOR AHU ROOM	Within 2 weeks from the date of BHEL input drawing	8	8	18	SECONDARY
31		PE-V0-530-558-E106	LDC & LLO FOR SWAS ROOM	Within 2 weeks from the date of BHEL input drawing	8	8	18	SECONDARY
32		PE-V0-530-558-E107	LDC & LLO FOR BATTERY ROOM	Within 2 weeks from the date of BHEL input drawing	8	8	18	SECONDARY
33		PE-V0-530-558-E108	LDC & LLO FOR MV SWITCHGEAR ROOM	Within 2 weeks from the date of BHEL input drawing	8	8	18	SECONDARY
34		PE-V0-530-558-E109	LDC & LLO FOR BELOW MV SWGR ROOM	Within 2 weeks from the date of BHEL input drawing	8	8	18	SECONDARY
35		PE-V0-530-558-E110	LDC & LLO FOR LV SWITCHGEAR ROOM	Within 2 weeks from the date of BHEL input drawing	8	8	18	SECONDARY

36		PE-V0-530-558-E111	LDC & LLO FOR BELOW LV SWITCHGEAR ROOM	Within 2 weeks from the date of BHEL input drawing	8	8	18	SECONDARY
37		PE-V0-530-558-E112	LDC & LLO FOR BOILER SWITCHGEAR ROOM	Within 2 weeks from the date of BHEL input drawing	8	8	18	SECONDARY
38		PE-V0-530-558-E113	LDC & LLO BELOW BOILER SWITCHGEAR ROOM (CABLE VAULT)	Within 2 weeks from the date of BHEL input drawing	8	8	18	SECONDARY
39		PE-V0-530-558-E114	LDC & LLO FOR MAIN COMMON CONTROL ROOM	Within 2 weeks from the date of BHEL input drawing	8	8	18	SECONDARY
40		PE-V0-530-558-E115	LDC & LLO FOR BELOW CONTROL ROOM	Within 2 weeks from the date of BHEL input drawing	8	8	18	SECONDARY
41		PE-V0-530-558-E116	LDC & LLO FOR ESP CUM FGD CONTROL BUILDING	Within 2 weeks from the date of BHEL input drawing	8	8	18	SECONDARY
42		PE-V0-530-558-E117	LDC & LLO FOR ESP PLATFORM	Within 2 weeks from the date of BHEL input drawing	8	8	18	SECONDARY
43		PE-V0-530-558-E118	LDC & LLO FOR ID AND PA FAN AREA DRAWING (UPTO CHIMNEY)	Within 2 weeks from the date of BHEL input drawing	8	8	18	SECONDARY
44		PE-V0-530-558-E119	LDC & LLO FOR BOILER PLATFORMS	Within 2 weeks from the date of BHEL input drawing	8	8	18	SECONDARY
45		PE-V0-530-558-E120	LDC & LLO BOILER EL0.0M & MILL AREA	Within 2 weeks from the date of BHEL input drawing	8	8	18	SECONDARY
46		PE-V0-530-558-E121	LDC & LLO FOR TRANSFORMER YARD	Within 2 weeks from the date of BHEL input drawing	8	8	18	SECONDARY
47		PE-V0-530-558-E122	LDC & LLO FOR VFD ROOM	Within 2 weeks from the date of BHEL input drawing	8	8	18	SECONDARY
48		PE-V0-530-558-E123	LDC & LLO FOR COMPRESSOR HOUSE	Within 2 weeks from the date of BHEL input drawing	8	8	18	SECONDARY
49		PE-V0-530-558-E124	LDC & LLO FOR FIRE WATER PUMP HOUSE	Within 2 weeks from the date of BHEL input drawing	8	8	18	SECONDARY
50		PE-V0-530-558-E125	LDC & LLO FOR FOAM PUMP HOUSE	Within 2 weeks from the date of BHEL input drawing	8	8	18	SECONDARY
51		PE-V0-530-558-E126	LDC & LLO FOR FIRE FIGHTING FIRE WATER BOOSTER PUMP HOUSE	Within 2 weeks from the date of BHEL input drawing	8	8	18	SECONDARY
52		PE-V0-530-558-E127	LDC & LLO FOR GATE COMPLEX AND CISF BLDG	Within 2 weeks from the date of BHEL input drawing	8	8	18	SECONDARY
53		PE-V0-530-558-E128	LDC & LLO FOR PCRI LAB	Within 2 weeks from the date of BHEL input drawing	8	8	18	SECONDARY
54		PE-V0-530-558-E129	LDC & LLO FOR REST ROOMS	Within 2 weeks from the date of BHEL input drawing	8	8	18	SECONDARY
55		PE-V0-530-558-E130	LDC & LLO FOR SAFETY PARK & CONTROL ROOM	Within 2 weeks from the date of BHEL input drawing	8	8	18	SECONDARY
56		PE-V0-530-558-E131	LDC & LLO FOR CENTRAL LUBE OIL BUILDING	Within 2 weeks from the date of BHEL input drawing	8	8	18	SECONDARY
57		PE-V0-530-558-E132	LDC & LLO FOR CAR & SCOOTER PARKING	Within 2 weeks from the date of BHEL input drawing	8	8	18	SECONDARY
58		PE-V0-530-558-E133	LDC & LLO FOR FUEL OIL TANK AREA	Within 2 weeks from the date of BHEL input drawing	8	8	18	SECONDARY
59		PE-V0-530-558-E134	LDC & LLO FOR WATCH TOWER (7 NOS.)	Within 2 weeks from the date of BHEL input drawing	8	8	18	SECONDARY
60		PE-V0-530-558-E135	LDC & LLO FOR ROADS	Within 2 weeks from the date of BHEL input drawing	8	8	18	SECONDARY
61		PE-V0-530-558-E136	LDC & LLO FUEL OIL PUMP HOUSE	Within 2 weeks from the date of BHEL input drawing	8	8	18	SECONDARY
62		PE-V0-530-558-E137	LDC & LLO FOR O&M STORE	Within 2 weeks from the date of BHEL input drawing	8	8	18	SECONDARY
63		PE-V0-530-558-E138	LDC & LLO FOR SERVICE BUILDING	Within 2 weeks from the date of BHEL input drawing	8	8	18	SECONDARY
64		PE-V0-530-558-E139	LDC & LLO FOR FGD ABSORBER AREA	Within 2 weeks from the date of BHEL input drawing	8	8	18	SECONDARY
65		PE-V0-530-558-E140	LDC & LLO FOR GYPSUM DEWATERING BUILDING	Within 2 weeks from the date of BHEL input drawing	8	8	18	SECONDARY
66		PE-V0-530-558-E141	LDC & LLO FOR BALL MILL BUILDING	Within 2 weeks from the date of BHEL input drawing	8	8	18	SECONDARY

67		PE-V0-530-558-E142	LDC & LLO FOR FGD DG SET	Within 2 weeks from the date of BHEL input drawing	8	8	18	SECONDARY
68		PE-V0-530-558-E201	CLO FOR TG GROUND FLOOR	Within 1 week from approval of LLO	8	8	18	SECONDARY
69		PE-V0-530-558-E202	CLO FOR TG MEZZANINE FLOOR	Within 1 week from approval of LLO	8	8	18	SECONDARY
70		PE-V0-530-558-E203	CLO FOR TG OPERATING FLOOR	Within 1 week from approval of LLO	8	8	18	SECONDARY
71		PE-V0-530-558-E204	CLO FOR TG DEAERATOR FLOOR	Within 1 week from approval of LLO	8	8	18	SECONDARY
72		PE-V0-530-558-E205	CLO FOR AHU ROOM	Within 1 week from approval of LLO	8	8	18	SECONDARY
73		PE-V0-530-558-E206	CLO FOR SWAS ROOM	Within 1 week from approval of LLO	8	8	18	SECONDARY
74		PE-V0-530-558-E207	CLO FOR BATTERY ROOM	Within 1 week from approval of LLO	8	8	18	SECONDARY
75		PE-V0-530-558-E208	CLO FOR MV SWITCHGEAR ROOM	Within 1 week from approval of LLO	8	8	18	SECONDARY
76		PE-V0-530-558-E209	CLO FOR BELOW MV SWGR ROOM	Within 1 week from approval of LLO	8	8	18	SECONDARY
77		PE-V0-530-558-E210	CLO FOR LV SWITCHGEAR ROOM	Within 1 week from approval of LLO	8	8	18	SECONDARY
78		PE-V0-530-558-E211	CLO FOR BELOW LV SWITCHGEAR ROOM	Within 1 week from approval of LLO	8	8	18	SECONDARY
79		PE-V0-530-558-E212	CLO FOR BOILER SWITCHGEAR ROOM	Within 1 week from approval of LLO	8	8	18	SECONDARY
80		PE-V0-530-558-E213	CLO BELOW BOILER SWITCHGEAR ROOM (CABLE VAULT)	Within 1 week from approval of LLO	8	8	18	SECONDARY
81		PE-V0-530-558-E214	CLO FOR MAIN COMMON CONTROL ROOM	Within 1 week from approval of LLO	8	8	18	SECONDARY
82		PE-V0-530-558-E215	CLO FOR BELOW CONTROL ROOM	Within 1 week from approval of LLO	8	8	18	SECONDARY
83		PE-V0-530-558-E216	CLO FOR ESP CUM FGD CONTROL BUILDING	Within 1 week from approval of LLO	8	8	18	SECONDARY
84		PE-V0-530-558-E217	CLO FOR ESP PLATFORM	Within 1 week from approval of LLO	8	8	18	SECONDARY
85		PE-V0-530-558-E218	CLO FOR ID AND PA FAN AREA DRAWING (UPTO CHIMNEY)	Within 1 week from approval of LLO	8	8	18	SECONDARY
86		PE-V0-530-558-E219	CLO FOR BOILER PLATFORMS	Within 1 week from approval of LLO	8	8	18	SECONDARY
87		PE-V0-530-558-E220	CLO BOILER EL0.0M & MILL AREA	Within 1 week from approval of LLO	8	8	18	SECONDARY
88		PE-V0-530-558-E221	CLO FOR TRANSFORMER YARD	Within 1 week from approval of LLO	8	8	18	SECONDARY
89		PE-V0-530-558-E222	CLO FOR VFD ROOM	Within 1 week from approval of LLO	8	8	18	SECONDARY
90		PE-V0-530-558-E223	CLO FOR COMPRESSOR HOUSE	Within 1 week from approval of LLO	8	8	18	SECONDARY
91		PE-V0-530-558-E224	CLO FOR FIRE WATER PUMP HOUSE	Within 1 week from approval of LLO	8	8	18	SECONDARY
92		PE-V0-530-558-E225	CLO FOR FOAM PUMP HOUSE	Within 1 week from approval of LLO	8	8	18	SECONDARY
93		PE-V0-530-558-E226	CLO FOR FIRE FIGHTING FIRE WATER BOOSTER PUMP HOUSE	Within 1 week from approval of LLO	8	8	18	SECONDARY
94		PE-V0-530-558-E227	CLO FOR GATE COMPLEX AND CISF BLDG	Within 1 week from approval of LLO	8	8	18	SECONDARY
95		PE-V0-530-558-E228	CLO FOR PCRI LAB	Within 1 week from approval of LLO	8	8	18	SECONDARY
96		PE-V0-530-558-E229	CLO FOR REST ROOMS	Within 1 week from approval of LLO	8	8	18	SECONDARY
97		PE-V0-530-558-E230	CLO FOR SAFETY PARK & CONTROL ROOM	Within 1 week from approval of LLO	8	8	18	SECONDARY
98		PE-V0-530-558-E231	CLO FOR CENTRAL LUBE OIL BUILDING	Within 1 week from approval of LLO	8	8	18	SECONDARY
99		PE-V0-530-558-E232	CLO FOR CAR & SCOOTER PARKING	Within 1 week from approval of LLO	8	8	18	SECONDARY
100		PE-V0-530-558-E233	CLO FOR FUEL OIL TANK AREA	Within 1 week from approval of LLO	8	8	18	SECONDARY
101		PE-V0-530-558-E234	CLO FOR WATCH TOWER (7 NOS.)	Within 1 week from approval of LLO	8	8	18	SECONDARY
102		PE-V0-530-558-E235	CLO FOR ROADS	Within 1 week from approval of LLO	8	8	18	SECONDARY
103		PE-V0-530-558-E236	CLO FUEL OIL PUMP HOUSE	Within 1 week from approval of LLO	8	8	18	SECONDARY
104		PE-V0-530-558-E237	CLO FOR O&M STORE	Within 1 week from approval of LLO	8	8	18	SECONDARY
105		PE-V0-530-558-E238	CLO FOR SERVICE BUILDING	Within 1 week from approval of LLO	8	8	18	SECONDARY
106		PE-V0-530-558-E239	CLO FOR FGD ABSORBER AREA	Within 1 week from approval of LLO	8	8	18	SECONDARY
107		PE-V0-530-558-E240	CLO FOR GYPSUM DEWATERING BUILDING	Within 1 week from approval of LLO	8	8	18	SECONDARY
108		PE-V0-530-558-E241	CLO FOR BALL MILL BUILDING	Within 1 week from approval of LLO	8	8	18	SECONDARY
109		PE-V0-530-558-E242	CLO FOR FGD DG SET	Within 1 week from approval of LLO	8	8	18	SECONDARY

NOTES:

a) * 1st submission within indicated days from date of purchase order.

b) # Submission (within indicated days) after incorporating all BHEL comments.

c) Primary documents shall be considered for Delay analysis

d) Inputs will be provided in staggered manner at contract stage (to be finalized during kick-off meeting) and a maximum of 20 input drawings will be furnished to vendor within a week for preparation of LDC and LLO drawings. CLO drawings to be prepared within one week of approval of LLO.

e) The list of LDC/LLO/CLO drawings mentioned above is tentative and can change during detailed engineering. (LDC- Lighting Design Calculation, LLO- Lighting Layout Drawing, CLO- Conduit Layout Drawing)

f) Areawise BOQ for lighting system shall be submitted at regular intervals which shall be updated progressively with LLOs/CLOs finalization.

DRAWINGS & DOCUMENTS TO BE SUBMITTED AS FINAL/AS-BUILT DOCUMENT			
Sl. No.		**DOCUMENT TITLE**	
1		APPROVED DOCUMENTS	
2		Field Quality Plan of lighting fixtures	

COMPLIANCE CERTIFICATE

COMPLIANCE CERTIFICATE	
1	It is hereby confirm that the technical specification has been read, understood. We confirm compliance to the tender specification including any clarification and amendments without any deviation.
2	It is hereby declared that any technical submittals which was not specifically asked for in NIT shall stand withdrawn.

Signature of authorised Representative :

Name and Designation :

Name & Address of the Bidder :

Date

UNPRICED SCHEDULE (MAIN SUPPLY)

	TECHNICAL SPECIFICATION STATION LIGHTING SYSTEM 2 X 660 MW KORBA WEST STPP	PE-TS-530-558-E001 Issue No: 01 Rev. No. 00 Date : 08.09.2026

UNPRICED SCHEDULE (MAIN SUPPLY)

Item No.	DESCRIPTION MAIN SUPPLY ITEMS	UNIT	QTY.	UNIT PRICE	TOTAL PRICE	Remarks
1.0	**Lighting Luminaires (complete with accessories)**					
1.1	Luminaire Type LED FC06 (LED)	Nos.	2040			
1.2	Luminaire Type LED FC07 (LED) - DC	Nos.	255			
1.3	Luminaire Type LED FC30 (LED)	Nos.	1224			
1.4	Luminaire Type Dimmable FC30 (LED)	Nos.	113			
1.5	Luminaire Type LED FC33 (LED) - DC	Nos.	255			
1.6	Luminaire Type LED FC34 (LED) - DC	Nos.	612			
1.7	Luminaire Type LED FC81 (LED)	Nos.	113			
1.8	Luminaire Type LED SB11 (LED)	Nos.	123			
1.9	Luminaire Type LED SB02 (LED)	Nos.	561			
1.10	Luminaire Type LED SB03 (LED)	Nos.	184			
1.11	Luminaire Type LED SF63 (LED)	Nos.	102			
1.12	Luminaire Type LED SF64 (LED)	Nos.	38			
1.13	Luminaire Type LED SS62 (LED)	Nos.	459			
1.14	Luminaire Type LED SS63 (LED)	Nos.	255			
1.15	Luminaire Type LED SW41 (LED)	Nos.	5100			
1.16	Luminaire Type LED SW42 (LED)	Nos.	2550			
1.17	Luminaire Type LED MW96 (LED)	Nos.	123			
1.18	LUMINAIRE TYPE DOWNLIGTER 15-18W(LED)	Nos.	255			
1.19	LUMINAIRE DIMABLE DOWNLIGTER 15-18W(LED)	Nos.	52			
1.20	Cove Light - LED (5m Strip)	Nos.	102			
2.0	**Switch boxes for individual control of circuits (Switchboards consisting of switch boxes, switches, switch plates and fixing accessories.)**					
2.1	SWITCH BOXES TYPE SWB1	Nos.	165			
2.2	SWITCH BOXES TYPE SWB2	Nos.	85			
2.3	SWITCH BOXES TYPE SWB3	Nos.	35			
2.4	SWITCH BOXES TYPE SWB4	Nos.	20			
2.5	SWITCH BOXES TYPE SWB5	Nos.	80			
3.0	**Junction boxes**					
3.1	JUNCTION BOXES TYPE JB-F	Nos.	13325			
3.2	JUNCTION BOXES TYPE JB-FE	Nos.	130			
4.0	**Receptacles**					
4.1	RECEPTACLES TYPE RA	Nos.	410			
4.2	RECEPTACLES TYPE RA (FLAME PROOF)	Nos.	5			
4.3	RECEPTACLES TYPE RB	Nos.	400			
4.4	RECEPTACLES TYPE RC	Nos.	265			
4.5	RECEPTACLES TYPE-RC (FLAME PROOF)	Nos.	3			
5.0	**Fans**					
5.1	Pedestal Fan	Nos.	10			
5.1	Ceiling Fan	Nos.	10			
6.0	**Emergency lighting Units**					
6.1	With Ni-Cd battery, Charger and LED lamp	Nos.	45			

7.0	**24V Supply module & lamp unit complete with all accessories**					
7.1	5A,24V SOCKET FOR LAMP	Nos.	160			
7.2	24V Portable halogen/LED lamp unit	Nos.	20			
7.3	Portable type 24V supply modules	Nos.	6			
8.0	**EXIT SIGN**	Nos.	100			
9.0	**Occupancy Sensor**	Nos.	130			
10.0	**Lighting Dimmer System**	Nos.	2			
11.0	**Lighting sensor system (Service Building)**	Nos.	1			
12.0	**Control system (Service Building)**	Nos.	1			
13.0	**Flexible Conduit 20MM DIA**	mtrs.	21000			
14.0	**Ladder**					
14.1	Free standing ladder(3m)	Nos.	10			
14.2	Wall supported Portable Aluminium Ladder (3m)	Nos.	10			
15.0	**Structural steel**	MT	60			
16.0	**LIGHTING DISTRIBUTION BOARD (LDB) & WELDING DISTRIBUTION BOARD (WDB)**					
16.1	**AC LDB TYPE-H(O/G 12)-WITH TWO INCOMER**					
16.1.1	AC LDB Type LDB-H (12) without transformer (including cubicle suitable for 2 nos. 100 kVA transformer)	Nos.	2			
16.1.2	100kVA transformer for AC LDB Type LDB-H (12) - Normal Non encapsulated type	Nos.	4			
16.2	**AC LDB TYPE-H(O/G 12)-WITH ONE INCOMER**					
16.2.1	AC LDB Type LDB-H (12) without transformer (including cubicle suitable for 1 no. 100 kVA transformer)	Nos.	19			
16.2.2	100kVA transformer for AC LDB Type LDB-H (12) - Normal Non encapsulated type	Nos.	19			
16.3	**AC LDB TYPE-F(O/G 8)-WITH TWO INCOMER**					
16.3.1	AC LDB Type LDB-F (8) without transformer (including cubicle suitable for 2 no. 50 kVA transformer)	Nos.	3			
16.3.2	50kVA transformer for AC LDB Type LDB-F (8) - Normal Non encapsulated type	Nos.	6			
16.4	**AC LDB TYPE-F(O/G 8)-WITH ONE INCOMER**					
16.4.1	AC LDB Type LDB-F (8) without transformer (including cubicle suitable for 1 no. 50 kVA transformer)	Nos.	3			
16.4.2	50kVA transformer for AC LDB Type LDB-F (8) - Normal Non encapsulated type	Nos.	3			
16.5	**AC WDB TYPE -H (12)**					
16.5.1	AC WDB Type WDB-H (12) without transformer (including cubicle suitable for 1 no. 100 kVA transformer)	Nos.	12			
16.5.2	100kVA transformer for AC WDB Type WDB-H (12) - Normal Non encapsulated type	Nos.	12			
16.6	**DC LDB TYPE-D (12)**	Nos.	6			
17.0	**LIGHTING PANELS (LP)**					
17.1	LIGHTING PANEL (DECORATIVE) TYPE-LP-A (18)	Nos.	12			
17.2	LIGHTING PANEL INDOOR TYPE-LP-A (18)	Nos.	26			
17.3	LIGHTING PANEL OUTDOOR TYPE-LP-A (18)	Nos.	40			
17.4	LIGHTING PANEL (DECORATIVE) TYPE-A (12)	Nos.	15			
17.5	LIGHTING PANEL INDOOR TYPE- LP-A (12)	Nos.	38			
17.6	LIGHTING PANEL OUTDOOR TYPE- LP-A (12)	Nos.	32			
17.7	LIGHTING PANEL INDOOR TYPE LP-D (6)	Nos.	19			
17.8	LIGHTING PANEL OUTDOOR TYPE LP-D (6)	Nos.	14			
17.9	LIGHTING PANEL STREET TYPE LP-S (6)	Nos.	10			
17.10	LP OUT DOOR TYPE LP-E(24) WITH 3 KVA TRF	Nos.	28			

18.0	**Mandatory Spares for LDBs & LPs**					
18.1	Timers 24 hours	Nos.	3			
18.2	Power Contactors of each type & rating	Nos.	5			5 nos. of each type & rating to be provided by vendor.
18.3	Auxiliary contactors of each type & rating	Nos.	5			5 nos. of each type & rating to be provided by vendor.
18.4	Rotary switches (Ammeter, voltmeter, Manual / Auto , Local / remote selector switches etc)of each type & rating	Nos.	5			5 nos. of each type & rating to be provided by vendor.
18.5	Indicating lamps & holders (RED, Green , Yellow etc) complete of each type & rating	Nos.	20			20 nos. of each type & rating to be provided by vendor.
18.6	On / Off Isolators of each type & rating	Nos.	5			5 nos. of each type & rating to be provided by vendor.
18.7	MCCBs of each type & rating	Nos.	5			5 nos. of each type & rating to be provided by vendor.
18.8	MCB of each type & rating	Nos.	10			10 nos. of each type & rating to be provided by vendor.
18.9	Volt meter of each type & size	Nos.	2			2 nos. of each type & size to be provided by vendor.
18.10	Ammeter of each type & size	Nos.	2			2 nos. of each type & size to be provided by vendor.
19.0	**POLES [Octagonal POLES, GALVANISED]**					
19.1	PS1, 9M HIGH SINGLE ARM OCTAGONAL STREET LIGHTING POLE	Nos.	30			
19.2	PS2, 11M HIGH SINGLE ARM OCTAGONAL STREET LIGHTING POLE	Nos.	235			
19.3	PF1, OCTAGONAL POLES TYPE PF1 (GALVANIZED)	Nos.	10			
19.4	PF2, OCTAGONAL POLES TYPE PF2 (GALVANIZED)	Nos.	10			
NOTES						
1	All erection consumables required for erection , testing and commissioning of main supply items and free issue items like double compression cable glands, conduit fittings viz. couplers, sockets (required for joining conduit), elbows, bends, tees, circular boxes, inspection bend etc. conduit accessories viz. clips, saddles, spacing plates, entry bushes, lock nuts, check nut, plugs, heavy duty lugs, ferrules, expansion fasteners, covers for power outlets in wash rooms and showers, ball & sockets, earth clips, fan boxes, clamps, screws, ceiling rose, casing and capings, adapter gland set, reducer, U bolt with nut washer, csk nut bolt, M / H Hook with rawl plug, Nail clamp for 3Cx2.5 Sq. mm CU LT XLPE Cable, Electrical tape etc are deemed to be included in MAIN SUPPLY & ERECTION AND COMMISSIONING (INSTALLATION) prices quoted by the bidder and no separate charges shall be payable for the same. Any other consumable not listed above but required for erection, testing and commissioning of the station lighting system and handing over to customer are deemed to be included in the scope of Main Supply, Erection and Commissioning (installation) price.					
2	Erection & commissioning for main supply items & free issue material (like GI wire & Flat, MS Rod, Hume Pipe, PVC Wire, Hot dip Galvanised Rigid Steel Conduits, Cable and buried underground cable as listed at S.No. 14,15,16,20,21,22 and 23 of Unpriced Schedule for Erection and Commissioning (Installation) Schedule respectively) is also in bidder's scope, Accordingly, Erection & commissioning of all equipments and fittings under "MAIN SUPPLY" & "ERECTION and COMMISSIONING (INSTALLATION)" is in bidder's scope.					
3	Container as per Specification are to be supplied along with first supplies. The price of container is deemed to be included in package price. No separate charges shall be payable.					
4	The material shall be supplied in LOTs. LOTs shall be released progressively based on approved lighting drawings of different areas and project requirement.					
5	Lighting system design charges are deemed to be included in the price of above items. No separate charges for design activity will be payable.					
6	Type Tests charges are deemed to be included in the price of above items. No separate charges for type testing will be payable.					
7	During supply of material, container numbers shall be verified with receipted LR for making payment along with Engineering concurrence.					
8	PVC shall be applicable for Distribution Boards, Lighting panels, Lighting & Welding transformers and Lighting Poles as per attached PVC Formula and IEEMA Circulars.					
9	Mandatory spares BOQ is included in Main supply BOQ. Same shall be released as a subsequent lot as per project requirement.					

UNPRICED SCHEDULE FOR ERECTION AND COMMISSIONING (INSTALLATION)

	TECHNICAL SPECIFICATION STATION LIGHTING SYSTEM 2 X 660 MW KORBA WEST STPP					PE-TS-530-558-E001 Issue No: 01 Rev. No. 00 Date : 08.09.2026
	UNPRICED SCHEDULE FOR ERECTION AND COMMISSIONING (INSTALLATION)					
Item No.	**DESCRIPTION** **MAIN SUPPLY ITEMS**	**UNIT**	**QTY.**	**UNIT PRICE**	**TOTAL PRICE**	**Remarks**
1.0	**Lighting Luminaires (complete with accessories)**					
1.1	Luminaire Type LED FC06 (LED)	Nos.	2000			
1.2	Luminaire Type LED FC07 (LED) - DC	Nos.	250			
1.3	Luminaire Type LED FC30 (LED)	Nos.	1200			
1.4	Luminaire Type Dimmable FC30 (LED)	Nos.	110			
1.5	Luminaire Type LED FC33 (LED) - DC	Nos.	250			
1.6	Luminaire Type LED FC34 (LED) - DC	Nos.	600			
1.7	Luminaire Type LED FC81 (LED)	Nos.	110			
1.8	Luminaire Type LED SB11 (LED)	Nos.	120			
1.9	Luminaire Type LED SB02 (LED)	Nos.	550			
1.10	Luminaire Type LED SB03 (LED)	Nos.	180			
1.11	Luminaire Type LED SF63 (LED)	Nos.	100			
1.12	Luminaire Type LED SF64 (LED)	Nos.	36			
1.13	Luminaire Type LED SS62 (LED)	Nos.	450			
1.14	Luminaire Type LED SS63 (LED)	Nos.	250			
1.15	Luminaire Type LED SW41 (LED)	Nos.	5000			
1.16	Luminaire Type LED SW42 (LED)	Nos.	2500			
1.17	Luminaire Type LED MW96 (LED)	Nos.	120			
1.18	LUMINAIRE TYPE DOWNLIGTER 15-18W(LED)	Nos.	250			
1.19	LUMINAIRE DIMABLE DOWNLIGTER 15-18W(LED)	Nos.	50			
1.20	Cove Light - LED (5m Strip)	Nos.	100			
2.0	**Switch boxes for individual control of circuits (Switchboards consisting of switch boxes, switches, switch plates and fixing accessories.)**					
2.1	SWITCH BOXES TYPE SWB1	Nos.	165			
2.2	SWITCH BOXES TYPE SWB2	Nos.	85			
2.3	SWITCH BOXES TYPE SWB3	Nos.	35			
2.4	SWITCH BOXES TYPE SWB4	Nos.	20			
2.5	SWITCH BOXES TYPE SWB5	Nos.	80			
3.0	**Junction boxes**					
3.1	JUNCTION BOXES TYPE JB-F	Nos.	13300			
3.2	JUNCTION BOXES TYPE JB-FE	Nos.	105			
4.0	**Receptacles**					
4.1	RECEPTACLES TYPE RA	Nos.	400			
4.2	RECEPTACLES TYPE RA (FLAME PROOF)	Nos.	5			
4.3	RECEPTACLES TYPE RB	Nos.	400			
4.4	RECEPTACLES TYPE RC	Nos.	260			
4.5	RECEPTACLES TYPE-RC (FLAME PROOF)	Nos.	3			
5.0	**Fans**					
5.1	Ceiling Fan	Nos.	10			
6.0	**Emergency lighting Units**					
6.1	With Ni-Cd battery, Charger and LED lamp	Nos.	45			
7.0	**24V Supply module & lamp unit complete with all accessories**					
7.1	5A,24V Socket for Lamp	Nos.	160			

8.0	**Exit Sign**	Nos.	100			
9.0	**Occupancy Sensor**	Nos.	130			
10.0	**Lighting Dimmer System**	Nos.	2			
11.0	**Lighting sensor system (Service Building)**	Nos.	1			
12.0	**Control system (Service Building)**	Nos.	1			
13	**Flexible Conduit 20MM DIA**	mtrs.	21,000			
14.0	**GI wire & Flat (Supply : Free issue by BHEL. Bidder to quote only Erection & Commissioning charges)**					
14.1	14 SWG Wire	mtrs.	3,37,000			
14.2	25 X 3 MM GS FLAT	mtrs.	4,000			
14.3	50 X 6 MM GS FLAT	mtrs.	3,500			
15.0	**MS ROD (Supply : Free issue by BHEL. Bidder to quote only Erection & Commissioning charges)**					
15.1	40 MM DIA MS ROD -(RODs OF 3M LENGTH will be provided)	Mtr	2,000			
16.0	**Hume pipe (Supply : Free issue by BHEL. Bidder to quote only Erection & Commissioning charges)**					
16.1	Hume pipe 100 mm dia	mtrs.	400			
17.0	**LIGHTING DISTRIBUTION BOARD (LDB) & WELDING DISTRIBUTION BOARD (WDB)**					
17.1	**AC LDB TYPE-H(O/G 12)-WITH TWO INCOMER**					
17.1.1	AC LDB Type LDB-H (12) without transformer (including cubicle suitable for 2 nos. 100 kVA transformer)	Nos.	2			
17.1.2	100kVA transformer for AC LDB Type LDB-H (12) - Normal Non encapsulated type	Nos.	4			
17.2	**AC LDB TYPE-H(O/G 12)-WITH ONE INCOMER**					
17.2.1	AC LDB Type LDB-H (12) without transformer (including cubicle suitable for 1 no. 100 kVA transformer)	Nos.	19			
17.2.1	100kVA transformer for AC LDB Type LDB-H (12) - Normal Non encapsulated type	Nos.	19			
17.3	**AC LDB TYPE-F(O/G 8)-WITH TWO INCOMER**					
17.3.1	AC LDB Type LDB-F (8) without transformer (including cubicle suitable for 2 no. 50 kVA transformer)	Nos.	3			
17.3.2	50kVA transformer for AC LDB Type LDB-F (8) - Normal Non encapsulated type	Nos.	6			
17.4	**AC LDB TYPE-F(O/G 8)-WITH ONE INCOMER**					
17.4.1	AC LDB Type LDB-F (8) without transformer (including cubicle suitable for 1 no. 50 kVA transformer)	Nos.	3			
17.4.2	50kVA transformer for AC LDB Type LDB-F (8) - Normal Non encapsulated type	Nos.	3			
17.5	**AC WDB TYPE -H (12)**					
17.5.1	AC WDB Type WDB-H (12) without transformer (including cubicle suitable for 1 no. 100 kVA transformer)	Nos.	12			
17.5.2	100kVA transformer for AC WDB Type WDB-H (12) - Normal Non encapsulated type	Nos.	12			
17.6	**DC LDB TYPE-D (12)**		6			
18.0	**Lighting Panels (LP)**					
18.1	LIGHTING PANEL (DECORATIVE) TYPE-A (18)	Nos.	12			
18.2	LIGHTING PANEL INDOOR TYPE-LP-A (18)	Nos.	26			
18.3	LIGHTING PANEL OUTDOOR TYPE-LP-A (18)	Nos.	40			
18.4	LIGHTING PANEL (DECORATIVE) TYPE-A (12)	Nos.	15			
18.5	LIGHTING PANEL INDOOR TYPE- LP-A (12)	Nos.	38			
18.6	LIGHTING PANEL OUTDOOR TYPE- LP-A (12)	Nos.	32			
18.7	LIGHTING PANEL INDOOR TYPE LP-D (6)	Nos.	19			
18.8	LIGHTING PANEL OUTDOOR TYPE LP-D (6)	Nos.	14			
18.9	LIGHTING PANEL STREET TYPE LP-S (6)	Nos.	10			
18.10	LP OUT DOOR TYPE LP-E(24) WITH 3 KVA TRF	Nos.	28			
19.0	**POLES [Octagonal POLES, GALVANISED]**					
19.1	PS1, 9M HIGH SINGLE ARM OCTAGONAL STREET LIGHTING POLE	Nos.	30			
19.2	PS2, 11M HIGH SINGLE ARM OCTAGONAL STREET LIGHTING POLE	Nos.	235			
19.3	PF1, OCTAGONAL POLES TYPE PF1 (GALVANIZED)	Nos.	10			
19.4	PF2, OCTAGONAL POLES TYPE PF2 (GALVANIZED)	Nos.	10			

20.0	**PVC Wires (Wire Supply : Free issue by BHEL. Bidder to quote only Erection & Commissioning charges)**					
20.1	WIRES 1X1.5 MM2 CU PVC	mtrs.	7,50,000			
20.2	WIRES 1X2.5 MM2 CU PVC	mtrs.	1,000			
20.3	WIRES 1X4.0 MM2 CU PVC	mtrs.	70,000			
21.0	**Hot dip Galvanised Rigid Steel Conduits (Heavy Duty) (Conduit Supply : Free issue by BHEL. Bidder to quote only Erection & Commissioning charges)**					
21.1	GI CONDUITS,1.6MM THICK, 20MM DIA	mtrs.	3,00,000			
21.2	GI CONDUITS,1.6MM THICK, 25MM DIA	mtrs.	35,000			
21.3	GI CONDUITS 1.6MM THK EPOXY 20MM DIA	mtrs.	2,000			
21.4	GI CONDUITS,2.0MM THICK, 40MM DIA	mtrs.	25,000			
22.0	**Laying & Termination of Cables (Cable Supply : Free issue by BHEL. Bidder to quote only Erection & Commissioning charges)**					
22.1	3C X 150 mm2 XLPE AL (A) (LAID ON TRAY)	mtrs.	2,000			
22.2	3C X 95 mm2 XLPE AL (A) (LAID ON TRAY)	mtrs.	600			
22.3	2C X 95 mm2 XLPE AL (A) (LAID ON TRAY)	mtrs.	4,000			
22.4	3.5C X 95 mm2 XLPE AL (A) (LAID ON TRAY)	mtrs.	44,000			
22.5	3.5C X 50 mm2 XLPE AL (A) (LAID ON TRAY)	mtrs.	14,000			
22.6	2C X 50 mm2 XLPE AL (A) (LAID ON TRAY)	mtrs.	3,000			
22.7	3C X 2.5 mm2 XLPE CU (A) (LAID ON TRAY)	mtrs.	2,000			
22.8	2C X 1.5 mm2 XLPE CU (A) (LAID ON TRAY)	mtrs.	8,000			
22.9	3C X 1.5 mm2 XLPE CU (A) (LAID ON TRAY)	mtrs.	1,000			
23.0	**Laying & Termination of Armoured Cable to be buried underground (Cable Supply : Free issue by BHEL. Bidder to quote only Erection & Commissioning charges)**					
23.1	3.5C X 25 mm2 XLPE AL (A) (LAID UNDER GROUND)	mtrs.	6,000			

	NOTES:
1	All erection consumables required for erection , testing and commissioning of main supply items and free issue items like double compression cable glands, conduit fittings viz. couplers, sockets (required for joining conduit), elbows, bends, tees, circular boxes, inspection bend etc. conduit accessories viz. clips, saddles, spacing plates, entry bushes, lock nuts, check nut, plugs, heavy duty lugs, ferrules, expansion fasteners, covers for power outlets in wash rooms and showers, ball & sockets, earth clips, fan boxes, clamps, screws, ceiling rose, casing and capings, adapter gland set, reducer, U bolt with nut washer, csk nut bolt, M / H Hook with rawl plug, Nail clamp for 3Cx2.5 Sq. mm CU LT XLPE Cable, Electrical tape etc are deemed to be included in MAIN SUPPLY & ERECTION AND COMMISSIONING (INSTALLATION) prices quoted by the bidder and no separate charges shall be payable for the same. Any other consumable not listed above but required for erection, testing and commissioning of the station lighting system and handing over to customer are deemed to be included in the scope of Main Supply, Erection and Commissioning (installation) price.
2	Erection & commissioning for main supply items & free issue material (like GI wire & Flat, MS Rod, Hume Pipe, PVC Wire, Hot dip Galvanised Rigid Steel Conduits, Cable and buried underground cable as listed at S.No. 14,15,16,20,21,22 and 23 of Unpriced Schedule for Erection and Commissioning (Installation) Schedule respectively) is also in bidder's scope, Accordingly, Erection & commissioning of all equipments and fittings under "MAIN SUPPLY" & "ERECTION and COMMISSIONING (INSTALLATION)" is in bidder's scope.
3	Rigid Steel Conduits, PVC Wires, GI wire, GI Flat, MS Rod, Hume Pipe and Cables shall be supplied by BHEL as per approved design quantity/CLOs and issued free of cost. a. All erection & commissioning material and consumables for above shall be supplied by bidder. Cost for the same is deemed to be included in MAIN SUPPLY/ERECTION AND COMMISSIONING (INSTALLATION). b. Fabrication charges of J-Pole (from 40 mm dia conduit) shall be included in erection & commissioning prices of conduit, no separate charges shall be payable for the same.
4	Fabrication & painting charges of structural steel shall be part of erection charges of those equipment for which the same is being used.
5	All measuring and testing instruments required during erection, testing, commissioning and performance testing shall be arranged by the bidder and can be taken back.

PRE QUALIFICATION REQUIREMENT (TECHNICAL)

ITEMS: Lighting Fixtures, Lighting Distribution Boards, Lighting Transformers, Lighting Panels. Lighting poles, Receptacles, Junction boxes, Switchboards, etc.

SCOPE:

Supply (Including Design): YES;

Erection & Commissioning (including site unloading, handling and storage): YES

1	Manufacturing Capability LED Lighting fixture manufacturer as per sub-vendor list (refer technical specification) or Vendor should be a Manufacturer of LED lighting fixture. Availability of type test reports conducted at independent Lab or witnessed by third party of LED fixture as per relevant standard. Availability of routine & acceptance test reports of LED lighting fixture to establish in-house capability at manufacturer's works to carry out routine & acceptance tests as per relevant standard. Vendor should have supplied LED lighting fixtures to power plant/ industrial installations.
2	E&C Capability: Option (a) – Executed at least one E&C of lighting system in Power plant/process plant/ refinery/ industry/ substation with minimum supply of 3000 number fixtures in single order. or Option (b) – Executed at least one E&C of Electrical Works (mandatorily including transformers, HT/LT switchgears and cabling) in power plant/ process plant/ refinery/ industry/ substation.
3	Minimum one (1) no. order for supply & E&C as above shall be submitted which should not be more than five (5) years old from the date of techno-commercial bid opening for establishing continuity in business.

	PREPARED BY	CHECKED BY	REVIEWED BY	APPROVED BY
SIGNATURE & DATE	Shweta Gaba 01.09.26	M Mahapatra 01.09.26	NN Jajware 01.09.26	01/09/2026
NAME	SHWETA GABA	MANMOHAN MAHAPATRA	NN JAJWARE	SANDEEP LODH
DESIGNATION	MANAGER	SR. MANAGER	DGM	(AGM, DH-ELECTRICAL)

NOTES-

1. In case vendor is able to meet criteria at Sl. No. 1 only and not Sl. No. 2 above (or vice-versa), vendor may furnish MOU on non-judicial stamp paper of Rs. 100 /- with any other party meeting the criteria at Sl. No. 2 (or 1) above at bidding stage. Bidder to indicate the scope matrix clearly defining their respective roles including design, supply of equipment/items, E&C etc. and shall be submitted as part of MOU. In case of joint bid, vendor and MOU partner to furnish order copy of respective scope of work (supply/E&C) in line with sl. No 3 above.
2. Bidder to note that agreement of bidding (i.e. MOU on non-judicial stamp paper) once offered to BHEL as a part of bidding documents cannot be changed till the execution of the project.
3. Cut-off date for credentials shall be considered same as date of techno-commercial bid opening.
4. Consideration of offer shall be subject to customer's approval of bidders, if applicable.
5. Bidder to submit all supporting documents in English. If documents submitted by bidder are in language other than English, a self-attested English translated document should also be submitted.
6. Notwithstanding anything stated above, BHEL reserves the right to assess the capabilities and capacity of the bidder to perform the contract, should the circumstances warrant such assessment in the overall interest of BHEL.
7. After satisfactory fulfilment of all the above criteria/ requirement, offer shall be considered for further evaluation as per NIT and all other terms of the tender.

	PREPARED BY	CHECKED BY	REVIEWED BY	APPROVED BY
SIGNATURE & DATE	Shweta Gaba 01.09.26	M. mahapatra 01.09.26	01.09.26	01/09/2026
NAME	SHWETA GABA	MANMOHAN MAHAPATRA	NN JAJWARE	SANDEEP LODH
DESIGNATION	MANAGER	SR. MANAGER	DGM	(AGM, DH-ELECTRICAL)

IEEMA LDB/WDB, LP & LIGHTING TRANSFORMER

CIN No. U99999MH1970GAPO14629

ieema®
your link to electricity

Indian Electrical & Electronics Manufacturer's Association
501, Kakad Chambers
132, Dr. A. B. Road, Worli,
Mumbai - 400 018.
INDIA.
P +91 22 2493 0532
F +91 22 2493 2705
E mumbai@ieema.org
W www.ieema.org

Cir. No.: 09/DIV/LVSWGR/05 **February 20, 2019**

To All members of LV Switchgear and MV+HV Switchgear Division
To all State Electricity Boards, Utilities and Other purchasing organizations

Sub: Final Price variation clauses for

1. LV Switchgear and Controlgear
2. MV AIS (Up to & Including 36 KV) Switchgear and Controlgear

IEEMA LV Switchgear and MV+HV Switchgear division has decided to revise old Price Variation clause applicable for LV and MV Switchgear (effective from January 2002) with change in cost composition and changes the sources for few raw materials which are currently in vogue.

IEEMA had circulated a Draft PV clause for LV and MV Switchgear vide cir. No. **02/DIV/LVSWGR/05** dated **January 17, 2019**. After incorporating suggestions on the above; we are making it final and operational from 1st January 2019.

We enclose separate revised PV clauses (effective from January 2019) for LV Switchgear (up to 1100 kV) and MV Switchgear (above 1100V up to 36 kV) along with sample two-step calculation. Monthly PV circulars of January 2019 as per old and new PV clauses are being published separately.

We request and recommend all the users & stakeholders including Utilities, PSUs etc. to incorporate these revised PV formula in all the new tenders/contracts.

For pending contracts, for the date of delivery on or after 1st April 2019, to arrive at the final price variation, we recommend using the following two stage method, which is a standard institutionalized methodology adopted by IEEMA for change over in all IEEMA PV clauses.

1. Calculate price variation 'P' from applicable prices/indices as per your base date / date of tendering up to January 2019 i.e. considering all prices/indices published in PV circular of January 2019 at numerator place; using IEEMA PV clause effective from January 2002.

2. Treat the above calculated 'P' as 'P_0' and calculate final price variation considering all prices / indices published in January 2019 as base prices/indices (at the denominator place) up to the applicable prices/indices as per your date of delivery; using revised LV / MV Switchgear clause effective from 1st January 2019.

   A two-step sample calculation is given as annexure.

Senior Director

Annexure to cir no 09/DIV/LVSWGR/05 dated February 20, 2019

Price variation formula for LV SWITCHGEAR AND CONTROLGEAR up to & including 1100 V							
		Date of Tendering	Apr-18	Date of Delivery	Apr-19		
Step I				Step II			
IEEMA SWGR PVC effective from 1st January 2002				IEEMA LV SWGR PVC effective from 1st January 2019			
% Weightages	Raw Material	Applicable month as per Date of Tendering (Apr-18)	Applicable month as per Date of of Delivery (FIXED)*	% Weightages	Raw Material	Applicable month as per Date of Tendering (FIXED)#	Applicable month as per Date of of Delivery (Apr-19)
25	Fix cost			21	Fix cost		
17	IS	Jan-18	Nov-18	19	IS	Nov-18	Dec-18
18	C (Copper Bar)	Mar-18	Jan-19	21	C (LME Copper)	Jan-19	Feb-19
10	AL	Mar-18	Jan-19	12	AL	Jan-19	Feb-19
13	In	Mar-18	Jan-19	15	In (Phenolic Moulding Powder)	Jan-19	Feb-19
17	W	Dec-17	Oct-18	12	W	Oct-18	Nov-18

Price variation formula for MV AIS (Above 1100 V and Up to & Including 36 KV) for outdoor circuit breakers and switchgear							
		Date of Tendering	Apr-18	Date of Delivery	Apr-19		
Step I				Step II			
IEEMA SWGR PVC effective from 1st January 2002				IEEMA MV SWGR PVC effective from 1st January 2019			
Weightages	Raw Material	Applicable month as per Date of Tendering (Apr-18)	Applicable month as per Date of of Delivery (FIXED)*	Weightages	Raw Material	Applicable month as per Date of Tendering (FIXED)#	Applicable month as per Date of of Delivery (Apr-19)
25	Fix cost			20	Fix cost		
17	IS	Jan-18	Nov-18	28	IS	Nov-18	Dec-18
18	C (Copper Bar)	Mar-18	Jan-19	26	C (LME Copper)	Jan-19	Feb-19
10	AL	Mar-18	Jan-19	4	AL	Jan-19	Feb-19
13	In (Epoxy Resin)	Mar-18	Jan-19	9	In (WPI of Insulator)	Nov-18	Dec-18
17	W	Dec-17	Oct-18	13	W	Oct-18	Nov-18

In step I calculation,

* all prices/indices to be taken from circular ref IEEMA(PVC)SWGR/(R)/01/2019 for applicable month as per old PV formulae wef Jan 2002

In step II calculation,

all prices/indices to be taken from circular ref IEEMA(PVC)SWGR(R-1)/01/2019 for applicable month as per new PV formulae wef Jan 2019

ieema® your link to electricity

ieema®
your link to electricity

Indian Electrical & Electronics Manufacturer's Association
501, Kakad Chambers
132, Dr. A. B. Road, Worli,
Mumbai - 400 018.
INDIA.
P +91 22 2493 0532
F +91 22 2493 2705
E mumbai@ieema.org
W www.ieema.org

IEEMA/PVC/LVSWGR/2019 (R-2) **Effective from: 1st January 2019**

PRICE VARIATION CLAUSE FOR LV SWITCHGEAR AND CONTROLGEAR (up to & including 1100 V)

The price quoted/confirmed is based on the input cost of raw materials/components and labour cost as on the date of quotation and the same is deemed to be related to prices of raw materials and all India average consumer price index number for industrial workers as specified in the price variation clause given below. In case of any variation in these prices and index numbers, the price payable shall be subject to adjustment, up or down in accordance with the following formula:

$$P = \frac{P0}{100}\left(21 + 19\,\frac{IS}{IS0} + 21\,\frac{C}{C0} + 12\,\frac{AL}{AL0} + 15\,\frac{In}{In0} + 12\,\frac{W}{W0}\right)$$

Wherein,

P = Price payable as adjusted in accordance with the above formula.

P_0 = Price quoted/confirmed. (Exclusive of all taxes & duties)

IS_0 = Wholesale price index number for 'Manufacture of Basic Metals' (Base: 2011-12=100)(refer notes)
This index number is as applicable for the month, **THREE** month prior to the date of tendering.

C_0 = Average LME settlement price of copper wire bars (refer notes)
This price is as applicable for the month, **ONE** month prior to the date of tendering.

Al_0 = Price of busbar grade aluminium (refer notes).
This price is as applicable on the 1st working day of the month, **ONE** month prior to the date of tendering

In_0 = Price of phenolic moulding powder
This price is as applicable on the 1st working day of the month, **ONE** month prior to the date of tendering.

W_0 = All India average consumer price index number for industrial workers, as published by the Labour Bureau, Ministry of Labour, Govt. of India (Base: 2001 = 100)
This index number is as applicable for the month, **Four** months prior to the date of tendering.

For example, if date of tendering falls in April 2019, applicable prices of Copper (C_0), Aluminium Busbar (Al_0) and Insulating Material (In_0) should be as on 1st March 2019 and Wholesale price index number for 'Manufacture of Basic Metals' (IS_0) and all India average consumer price index no. (W_0) should be for the month of January 2019.

The above prices and indices are as published by IEEMA vide circular reference number IEEMA(PVC)/SWGR(R-1)/_/_ **ONE** month prior to the date of tendering.

proud partners in implementation
MISSION PLAN 2012-2022

HEAD OFFICE - DELHI
Rishyamook Building, First Floor, 85 A, Panchkuian Road, New Delhi – 110001, INDIA.
P +91 11 2336 3013 / 14 • F +91 11 2336 3015 • E delhi@ieema.org • W www.ieema.org

IS = Wholesale price index number for 'Manufacture of Basic Metals' (Base: 2011-12=100) (refer notes)
This index number is as applicable for the month, **FOUR** month prior to the date of delivery.

C = Average LME settlement price of copper wire bars (refer notes)
This price is as applicable for the month, **TWO** month prior to the date of delivery.

Al = Price of busbar grade aluminium (refer notes).
This price is as applicable on the 1st working day of the month, **TWO** month prior to the date of delivery.

In = Price of phenolic moulding powder
This price is as applicable on the 1st working day of the month, **TWO** month prior to the date of delivery.

W = All India average consumer price index number for industrial workers, as published by the Labour Bureau, Ministry of Labour, Govt. of India (Base: 2001 = 100)
This index number is as applicable for the month, **FIVE** months prior to the date of delivery.

For example, if date of delivery in terms of clause given below falls in June 2019, applicable prices of Copper (C_0), Aluminium Busbar (Al_0) and Insulating Material (In_0) should be as on 1st April 2019 and Wholesale price index number for 'Manufacture of Basic Metals' (S_0) and all India average consumer price index no. (W_0) should be for the month of February 2019.

The date of delivery is the date on which the product is notified as being ready for inspection/despatch (in the absence of such notification, the date of manufacturer's despatch note is to be considered as the date of delivery) or the contracted delivery date (including any agreed extension thereto), whichever is earlier.

Notes

a) All prices of raw materials are exclusive of modvatable GST/CV duty amount and exclusive of any other central, state or local taxes, octroi etc.

b) The details of prices are as under:

1. The wholesale price index number for 'Manufacture of Basic Metals' is as published by the Office of Economic Advisor, Ministry of commerce & Industry, Govt. of India, New Delhi with base 2011-12 = 100

2. The LME price of Copper Wire Bars (in Rs./MT) is the LME average settlement price of Copper Wire Bars converted into Indian Rupees with applicable average exchange rate of SBI of the month. This price is the landed cost, inclusive of applicable customs duty only but exclusive of countervailing duty

3. The price of busbar grade aluminium (in Rs/MT) is the average of ex-works price as quoted by the two primary producers for the busbar size 152.4 x 6.35 mm flat approximately, grade equivalent to E91 E as per IS 5082-1998 (or the latest).

4. The price of insulating material (in Rs/Kg) is the average price of phenolic moulding powder quoted by three manufacturers applicable for Switchgear and Controlgear of medium/lower voltage up to 1100 volts

Senior Director

ieema
your link to electricity

Indian Electrical & Electronics Manufacturer's Association
501, Kakad Chambers
132, Dr. A. B. Road, Worli,
Mumba i 400 018
India
P +91 22 2493 0532
F +91 22 2493 2705
E mumbai@ieema.org
W www.ieema.org

IEEMA/PVC/DIST_DT_CU/2021 Effective from: 01 September 2021

PRICE VARIATION CLAUSE FOR COPPER WOUND DRY TYPE DISTRIBUTION TRANSFORMERS COMPLETE WITH ALL ACCESSORIES AND COMPONENTS (Of ratings up to and including 2,500 KVA and voltage class up to 33 KV) supplied against domestic contracts

This price variation clause is applicable for 'Copper Wound Dry Type Distribution Transformers', with rating up to and including 2,500 KVA and voltage class up to 33 KV supplied against domestic contracts. A separate price variation clause IEEMA/PVC/DIST_DT_CU/DE/2021 has been evolved for above types of Transformers supplied against export/deemed export contracts under special imprest licensing scheme.

The price quoted/confirmed is based on the input cost of raw materials/components and labour cost as on the date of quotation and the same is deemed to be related to prices of raw materials and all India average consumer price index number for industrial workers as specified in the price variation clause given below. In case of any variation in these prices/indices, the price payable shall be subject to adjustment, up or down in accordance with the following formula:

$$P = \frac{P_\circ}{100}\left(7 + 35\,\frac{C}{C_\circ} + 30\,\frac{ES}{ES_\circ} + 7\,\frac{IS}{IS_\circ} + 8\,\frac{IM}{IM_\circ} + 7\,\frac{ER}{ER_\circ} + 6\,\frac{W}{W_\circ}\right)$$

Wherein,

P = Price payable as adjusted in accordance with the above formula.

P_0 = Price quoted/confirmed.

C_0 = Price of CC copper rods (refer notes)
This price is as applicable for the month, **ONE** month prior to the date of tendering.

ES_o = Price of CRGO Electrical Steel Lamination (refer notes)
This price is as applicable for the month, **ONE** month prior to the date of tendering.

IS_o = Price of HR Coil of 3.15 mm thickness (refer notes)
This price is as applicable for the month, **ONE** month prior to the date of tendering.

IM_0 = Price of Insulating Materials (refer notes)
This price is as applicable for the month, **ONE** month prior to the date of tendering.

ER_0 = Price of Epoxy resin (refer notes)
This price is as applicable for the month, **ONE** month prior to the date of tendering.

proud partners in implementation
MISSION PLAN 2012-2022
HEAD OFFICE - DELHI
Rishyamook Building, First Floor, 85 A, Panchkuian Road, New Delhi 110001
P +91 11 2336 3013 / 14 • F +91 11 2336 3015 • E delhi@ieema.org • W www.ieema.org

ieema
your link to electricity

Indian Electrical & Electronics Manufacturer's Association
501, Kakad Chambers
132, Dr. A. B. Road, Worli,
Mumba i 400 018
India
P +91 22 2493 0532
F +91 22 2493 2705
E mumbai@ieema.org
W www.ieema.org

W_0 = All India average consumer price index number for industrial workers, as published by the Labour Bureau, Ministry of Labour, Govt. of India (Base: 2016 = 100)
This index number is as applicable for the month, **THREE** months prior to the date of tendering.

For example, if date of tendering falls in December 2021, applicable prices of Copper (C_0), Epoxy Resin (ER_0), CRGO Steel Sheets (ES_0), HR Coil (IS_0) and Insulating material (IM_0) should be as on 1st November 2021 and all India average consumer price index no. (W_0) should be for the month of September 2021.

The above prices and indices are as published by IEEMA vide circular reference number IEEMA(PVC)/PWR_DIST_TRF (R-1)/_/_ **ONE** month prior to the date of tendering.

C = Price of CC copper rods (refer notes)
This price is as applicable for the month, **ONE** month prior to the date of delivery.

ES = Price of CRGO Electrical Steel Lamination (refer notes)
This price is as applicable for the month, **ONE** month prior to the date of delivery.

IS = Price of HR Coil of 3.15 mm thickness (refer notes)
This price is as applicable for the month, **ONE** month prior to the date of delivery.

IM = Price of Insulating Materials (refer notes)
This price is as applicable for the month, **ONE** month prior to the date of delivery.

ER = Price of Epoxy resin (refer notes)
This price is as applicable for the month, **ONE** month prior to the date of tendering.

W = All India average consumer price index number for industrial workers, as published by the Labour Bureau, Ministry of Labour, Govt. of India (Base: 2016 = 100)
This index number is as applicable for the month, **THREE** months prior to the date of delivery.

For example, if date of delivery in terms of clause given below falls in December 2022, applicable prices of Copper (C), Epoxy Resin (ER), CRGO Steel Sheets (ES), HR Coil (IS) and Insulating material (IM) should be as on 1st November 2022 and all India average consumer price index number (W) should be for the month of September 2022.

The above prices and indices are as published by IEEMA vide circular reference number IEEMA(PVC)/PWR_DIST_TRF (R-1)/_/_ **ONE** month prior to the date of delivery.

ieema
your link to electricity

Indian Electrical & Electronics Manufacturer's Association
501, Kakad Chambers
132, Dr. A. B. Road, Worli,
Mumba i 400 018
India
P +91 22 2493 0532
F +91 22 2493 2705
E mumbai@ieema.org
W www.ieema.org

IEEMA/PVC/DIST_DT_CU/2021 Effective from: 01 September 2021

The date of delivery is the date on which the transformer is notified as being ready for inspection/dispatch (in the absence of such notification, the date of manufacturer's dispatch note is to be considered as the date of delivery) or the contracted delivery date (including any agreed extension thereto), whichever is earlier.

Notes: (a) All prices of raw materials are exclusive of GST amount and exclusive of any other central, state or local taxes etc..

a) Date of Tendering is the due date of tender submission or date of tender opening whichever is earlier

b) The details of prices are as under:

1. Price of 8 mm CC copper rods (in Rs/MT) is ex-works price as quoted by the primary producer.

2. The price of CRGO Electrical Steel Lamination suitable for Transformers of voltage up to 33 KV is the average price as quoted by processing centres of mills and lamination suppliers

3. Price of steel is the average retail price of HR Coil 3.15 mm thickness as published by Joint Plant Committee (JPC) in Rs./MT

4. The average price of Insulting materials (in Rs./Kg) of pre-compressed pressboards of size 3 mm and 10 mm thick, 3200 mm x 4100 mm C&F price in free currency per MT converted into Indian Rupees with applicable exchange rates prevailing as on 1st working day of the month as quoted by primary suppliers. This price is the landed cost, inclusive of applicable customs duty only but exclusive of countervailing duty.

5. The price of Epoxy resin is price quoted by resin manufacturer for their grade CT 5900 or its nearest equivalent.

Director

proud partners in implementation
MISSION PLAN 2012-2022

HEAD OFFICE - DELHI
Rishyamook Building, First Floor, 85 A, Panchkuian Road, New Delhi 110001
P +91 11 2336 3013 / 14 • F +91 11 2336 3015 • E delhi@ieema.org • W www.ieema.org

IEEMA LIGHTING POLES

CIN No. U99999MH1970GAPO14629

ieema
your link to electricity

Indian Electrical & Electronics Manufacturer's Association
501, Kakad Chambers
132, Dr. A. B. Road, Worli,
Mumbai 400 018
India
P +91 22 2493 0532
F +91 22 2493 2705
E mumbai@ieema.org
W www.ieema.org

Cir. No. 10/PVC/T & D Project/05 **25 May 2022**

To Members of T & D Project Division, SEBs and other listed purchasing bodies.

Sub: New PV formulae for Steel Tubular Pole and Polygonal Pole

Currently Steel poles are increasingly used in distribution network especially in hilly area due to sturdiness and ease of transportation. And in the wake of upcoming scheme of Revamped Distribution network strengthening scheme (RDSS); members of IEEMA T & D project division decided to evolve PV formula for Steel Tubular Poles and Polygonal Poles.

IEEMA has collected costing data, lead time for manufacturing etc. from major manufacturers of poles and in consultation with division arrived at the draft Price Variation Clauses for Steel Tubular Poles and Polygonal Poles and circulated to all stakeholders vide circular no. **14/PVC/T & D Project/05 dated 9 Mar 22** for their comments.

After incorporating changes suggested by the industry stakeholders on the **Steel Tubular Pole and Polygonal Pole** PV formulae; we are making the Price Variation formulae operational from 1st April 2022.

We have enclosed PV clauses applicable for **Steel Tubular Pole and Polygonal Pole** which are effective from 1st April 2022.

Although, the PV clause is made effective from 1st April 2022, practically it can be incorporated in all the current new tenders/contracts starting from 1st May 2022.

We request and recommend all the users & stakeholders including Utilities, PSUs etc. to incorporate the above PV formulae in all the new tenders/contracts henceforth.

Director

ieema
your link to electricity

Indian Electrical & Electronics Manufacturer's Association
501, Kakad Chambers
132, Dr. A. B. Road, Worli,
Mumbai 400 018
India
P +91 22 2493 0532
F +91 22 2493 2705
E mumbai@ieema.org
W www.ieema.org

IEEMA/PVC/Poles/2022 **Effective from: 1st Apr 2022**

PRICE VARIATION CLAUSE FOR POLES

The price quoted/confirmed is based on the input cost of raw materials/components and labour cost as on the date of quotation and the same is deemed to be related to prices of raw materials and all India average consumer price index number for industrial workers as specified in the price variation clause given below. In case of any variation in these prices and index numbers, the price payable shall be subject to adjustment, up or down in accordance with the following formula:

(A) Steel Tubular Poles

$$P = \frac{P_\circ}{100}\left(7 + 70\frac{IS}{IS_\circ} + 13\frac{Zn}{Zn_\circ} + 10\frac{W}{W_\circ}\right)$$

(B) Polygonal Poles

$$P = \frac{P_\circ}{100}\left(9 + 64\frac{IS}{IS_\circ} + 13\frac{Zn}{Zn_\circ} + 14\frac{W}{W_\circ}\right)$$

Wherein,

P	=	Price payable as adjusted in accordance with the above formula.
P_0	=	Price quoted/confirmed.
IS_0	=	Price of HR Coil of 3.15 mm thickness (refer notes) This price is as applicable for the month, **ONE** month prior to the date of tendering.
Zn_0	=	Price of Electrolytic high grade zinc (refer notes) This price is as applicable on the 1st working day of the month, **ONE** month prior to the date of tendering.
W_0	=	All India average consumer price index number for industrial workers, as published by the Labour Bureau, Ministry of Labour, Govt. of India (Base: 2016 = 100) (Refer notes) This index number is as applicable for the month, **THREE** months prior to the date of tendering.

proud partners in implementation
MISSION PLAN 2012-2022

HEAD OFFICE - DELHI
Rishyamook Building, First Floor, 85 A, Panchkuian Road, New Delhi 110001
P +91 11 2336 3013 / 14 • F +91 11 2336 3015 • E delhi@ieema.org • W www.ieema.org

ieema
your link to electricity

Indian Electrical & Electronics Manufacturer's Association
501, Kakad Chambers
132, Dr. A. B. Road, Worli,
Mumbai 400 018
India
P +91 22 2493 0532
F +91 22 2493 2705
E mumbai@ieema.org
W www.ieema.org

For example, if date of tendering falls in May 2022, the applicable prices of HR Coil (IS_0) should be for the month March 2022, Zinc (Zn_0) should be for the month April 2022 and all India average consumer price index number (W_0) should be for the month of February 2022.

The above prices and indices are as published by IEEMA vide circular reference number IEEMA (PVC)/TLT-2014 (R-1)/_/_ **ONE** month prior to the date of tendering.

IS = Price of HR Coil of 3.15 mm thickness (refer notes)
This price is as applicable for the month, **FOUR** month prior to the date of delivery.

Zn = Price of Electrolytic high grade zinc (refer notes)
This price is as applicable on the 1st working day of the month, **ONE** month prior to the date of delivery.

W = All India average consumer price index number for industrial workers, as published by the Labour Bureau, Ministry of Labour, Govt. of India (Base: 2016 = 100) (Refer notes)
This index number is as applicable on the first working day of the month, **THREE** months prior to the date of delivery.

For example, if date of delivery falls in December 2022, the applicable prices of HR Coil (IS) should be for August 2022 and Zinc (Zn) should be for the month November 2022 and all India average consumer price index number (W) should be for the month of September 2022.

The date of delivery is the date on which Poles are notified as being ready for inspection/dispatch (in the absence of such notification, the date of manufacturer's dispatch note is to be considered as the date of delivery) or the contracted delivery date (including any agreed extension thereto), whichever is earlier.

Notes:
(a) All prices of raw materials are exclusive of GST and any other central, state or local taxes etc.

(b) The details of prices are as under:

1. Price of steel is the average retail price of HR Coil 3.15 mm thickness as published by Joint Plant Committee (JPC) in Rs./MT.

2. The price of Electrolytic high grade zinc (in Rs/MT) is ex-works price as quoted by a primary producer.

Director

proud partners in implementation
MISSION PLAN 2012-2022

HEAD OFFICE - DELHI
Rishyamook Building, First Floor, 85 A, Panchkuian Road, New Delhi 110001
P +91 11 2336 3013 / 14 • F +91 11 2336 3015 • E delhi@ieema.org • W www.ieema.org