ANNEXURE: 53813/RMS/TECH/A

MACHINING OF LABYRINTH RING

INDENT NO: 20220019

i) PRE QUALIFICATION REQUIREMENT

S.No.	BHEL Requirements	Vendor's Confirmation
1	Vendor should have a Vertical Boring machine which can machine a job of dia. 3900 mm, and weight 21MT	Vendor to Confirm and submit detail
2	Vendor should have material handling capacity ≥ 21MT	Vendor to Confirm and submit detail

ii) TECHNICAL REQUIREMENT

S.No.	BHEL Requirement	Vendor's Confirmation
1	Machining as per drawing no. 3-204-07-18101/M1:Rev-00	Vendor to confirm
2	Vendor to arrange all tools & instruments required for machining of the job	Vendor to confirm
3	BHEL reserves the right to visit vendor for stage inspection during job machining to assess the progress and technical aspects and further processing shall be done accordingly.	Vendor to confirm
4	Final Inspection of the machined job may be carried out by BHEL at vendor's works before despatch	Vendor to confirm
5	Delivery requirement: 5 weeks/pc from the date of lifting	Vendor to confirm
6	Identification details on the casting to be maintained	Vendor to confirm
7	Vendor to submit following with the offer:- a) Details of the Organization b) Details of the machine tools and other facilities installed in the company	Vendor to submit
8	Vendor may plan a visit to CFFP for technical discussion.	Vendor to Note
9	BHEL team may visit vendor's works for facility/capacity verification.	Vendor to Accept

Vikalp Bibhuti Dy. Manager (M/C Shop)	Md. Javed DGM (M/C Shop)	R.K.Singh AGM (M/C Shop)

FIRST ANGLE PROJECTION (ALL DIMENSIONS ARE IN M.M.)

DRAWING NUMBER 3-204-07-18101/M1

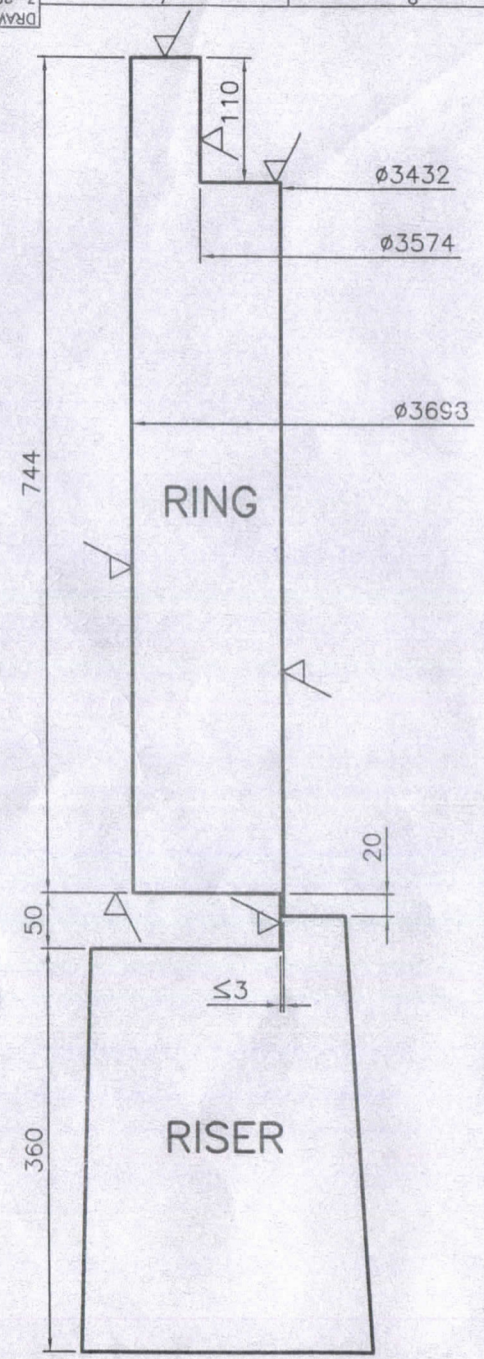

NOTE

1. CASTING TO BE ROUGH MACHINED ON THE SURFACE ▽ MARKED TO THE DRAWING DIMENSIONS AND SURFACE FINISH 12.5 MICRONS AND TO THE TOLERANCE OF +2 ON OD & HT AND -2 ON ID, UNLESS OTHERWISE STATED.
   -0 +0

2. THIS DRG. IS ISSUED FOR THE PURPOSE OF ROUGH MACHINING ONLY. FOR ALL OTHER DETAILS PLEASE REFER TO PROPOSED SUPPLY SKETCH DRG. NO. 3-204-07-18101 4N1/M/P AND COMPONENT DRG NO. 3-204-07-18101 REV 01.

3. ESTIMATED WEIGHT OF CASTING BEFORE MACHINING:20682 KGS.
   ESTIMATED WEIGHT OF CASTING AFTER MACHINING: 15790 KGS.

CONTROLLED COPY
Foundry Technology
C.No. SF/.....8.....
Date 28 APR 2022

REV	DATE	ALTERED / CHECKED
ZONE		

BHARAT HEAVY ELECTRICALS. LTD.
CENTRAL FOUNDRY FORGE PLANT
RANIPUR HARDWAR

DEPTT. FDY.TECH. | SCALE N.T.S. | WEIGHT IN Kgs

TITLE: ROUGH M/C DRG. FOR UPPER ROTATING LABYRINTH (4IN1)

	NAME	SIGN	DATE
DRN	23/PALAMARU RR LIS		/23621M
WKD	NKG	-SD-	04-11-2021
CHD	L AGRAWAL	-SD-	04-11-2021
APPD	AN SUDHAKAR	-SD-	04-11-2021

PROJECT AND CUSTOMER NAME: PALAMARU RR LIS - I BHEL / BHOPAL
TECHNOLOGY NO: 23621
DRAWING NO: 3-204-07-18101/M1
SHEET NO.- 1 NO. OF SHEETS-1

23006

Tender Enquiry No	FF/SC/22006/202200192
Item	Upper Rotating Labyrinth (4N1) Nickel= 3.5% - 4.5%

Issue of Material to Sub Store			Return of Material From S/c				Stock Details	
Sn	Sizedrgno	Qty /wt	Iden No	Wono	Size/Drgno	Qty/Wt	Sizedrgno	Wt
1	3-204-07-18101/M1:Rev-00	2 20682.00	S	53813	3-204-07-18101/M1 :Rev-00	2 15790.00		

Remarks:-

MARK & MACHINE AS PER DLY DRG.
IDENTIFICATION NO. TO BE PUNCHED
SEAL TO BE RETAINED
GRADE CONTAINS NICKEL=3.5-4.5%
RATES TO BE QUOTED ON PER KG OF CHIP REMOVAL BASIS