	LT MOTOR DATA SHEET	**BHEL BHADRADRI**
CLAUSE		
No.	PROJECT & PACKAGE:	IE-3 MOTORS
xxiv	Bearings	
a	Type	DE : BALL / NDE : BALL
b	Manufacturer	SKF, FAG or equivalent
c	Self lubricated or forced lubricated	Self Lubricated
d	Recommended lubricants	GREASE
e	Guaranteed life in hours	40,000
f	Whether dial type thermometer provided	NA
g	Oil pressure guage/switch	NA
i	range	NA
ii	Contact Nos. and ratings	NA
iii	Accuracy	NA
xxv	Vibration	
a	Velocity mm/s	AS PER IS 12075
b	Displacement microns	AS PER IS 12075
xxvi	Noise level db(A) at 1 m at no load	AS PER IS 12065
3	**CONSTRUCTIONAL FEATURES**	
i	Stator winding insulation	
a	Class & type	Class F with temperature rise limited to class B /Varnish
b	Tropicalised (Yes/No)	YES
c	Temperature rise over specificed max.	
	i. cold water temp. of 38 deg. C	NA
	ii. Ambient air 50 deg. C.	70° C
d	Method of temperature measurement	RESISTANCE METHOD
e	Stator winding connection	STAR
f	Number of terminals braught out	6
ii	Type of terminal box for	
a	Stator leads	YES
b	space heater	NA
c	Temperature detectors	NA
d	instrument switch etc.	NA
iii.	For main terminal box	
a	Location	TOP
b	Entry of cables	REFER GAD
c	Recommended cable size (to be matched with cable size envisaged by owner)	3C x 2.5 SQMM CU ARMOURED
d	Fault level	50KA for 0.25Sec with suitable back up fuses
iv	Temperature detector for stator winding	NA
a	Type	NA
b	Nos. provided	NA
c	Location	NA
d	make	NA
e	resistance value at 0 deg. C (ohms)	NA
v	space heaters	NA
a	Number	NA
b	Location	NA
c	Power requirement (Watt)	NA
vi	Paint shade	Shade No. 631 as per IS:5
vii	Approx. Weight of	
a	Motor stator	-
b	Motor rotor	-
c	Total weight (kg)	36
4	**CHARACTERISTIC CURVES**	
i	Torque speed characteristic of the motor	ATTACHED
ii	Calibration characteristic of platinum type resistance temperature detector	NA
iii	Calibration characteristic of platinum BTD	NA
iv	Thermal withstand characteristic	ATTACHED
v	Starting current vs. time	ATTACHED
vi	Starting current vs. speed	ATTACHED
vii	Neg. sequence current vs. time	ATTACHED
viii	PF & Efficiency Vs Load.	ATTACHED
NOTE :		

1) ALL PERFORMANCE FIGURES ARE SUBJECT TO IS/IEC TOLERANCES.
2) Fans to be started at closed damper condition only.

Thermal Withstand Curve 100% Voltage

Date:
Customer:
Attention:
Submitted by:

marathon® Motors TerraMAX

TCA 100LA06

IE3 Efficiency

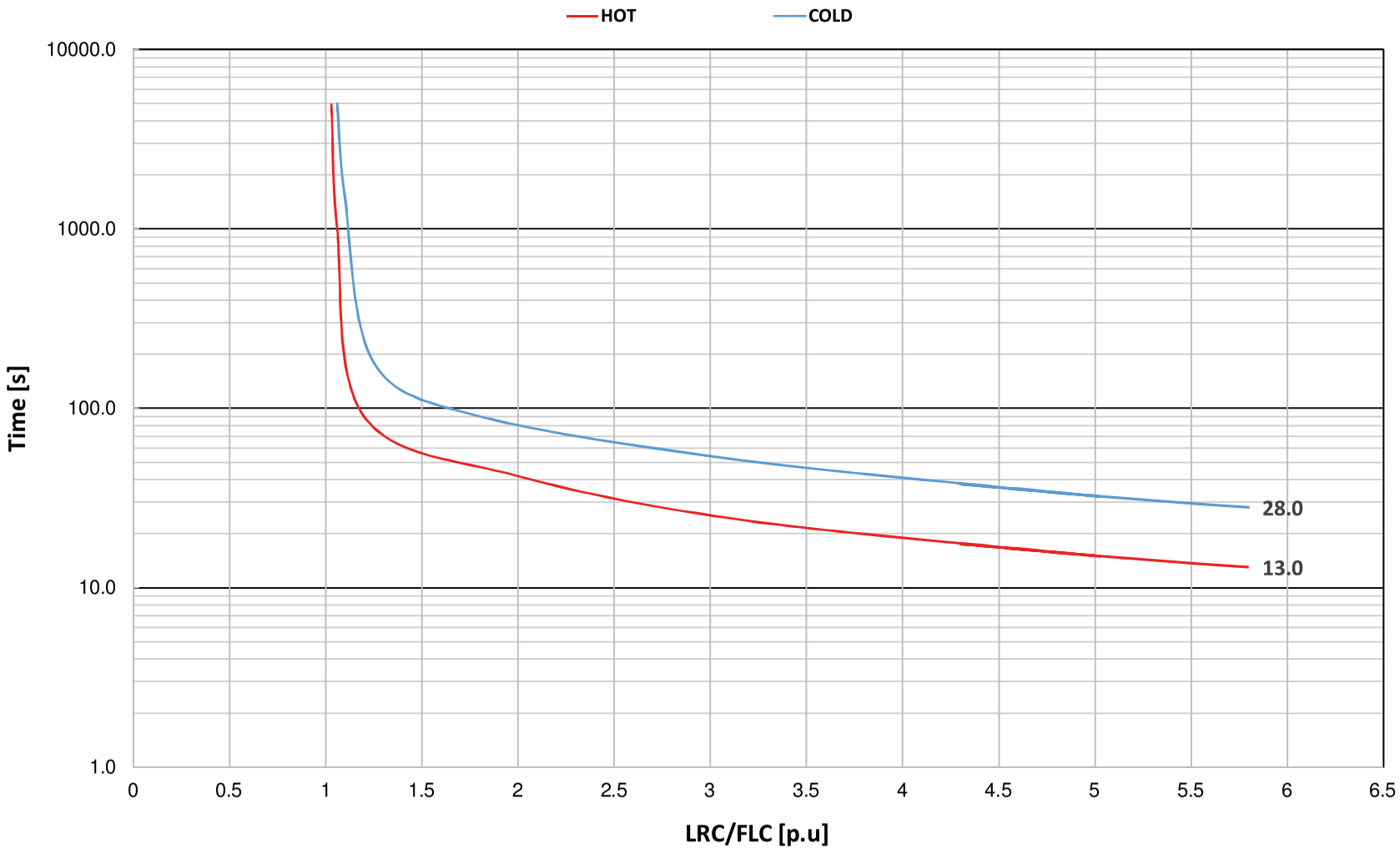

Performance Curves

Date:
Customer:
Attention:
Submitted by:

marathon® Motors TerraMAX™

TCA 100LA06

IE3 Efficiency

Motor Load Data

Load	0%	25%	50%	75%	100%
Current (Amps)	2.05	2.09	2.33	2.73	3.4
Torque (Nm)	0.00	3.6	7.3	11.0	14.8
RPM	1000	991	983	975	965
Efficiency (%)		69.1	79.2	82.5	82.5
P.F. (%)	11.0	36.0	51.9	66.8	75.6

Motor Speed - Torque Data

	LR	Pull-Up	BD	Rated	Idle
Speed (RPM)	0	91	781	965	1000
Current (Amps)	19.4	17.5	10.9	3.4	2.05
Torque (p.u.)	2.14	1.80	2.59	1.00	0.00

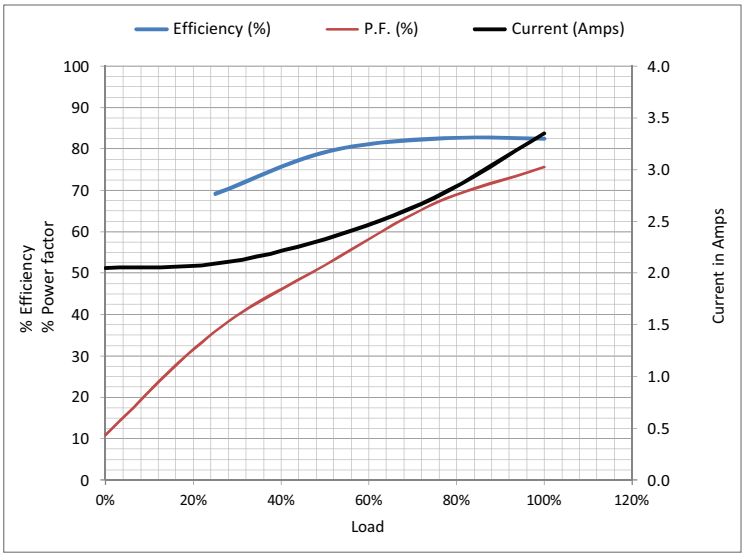

Information Block

kW	1.50	
Sync. RPM	1000	
Frame	100L	
Enclosure	TEFC	
Voltage	415	V
Frequency	50	Hz
Duty	S1	
Ambient	50	° C
Elevation	1,000	meters
Moment of Inertia	0.0143	kg-m²
Motor Weight	35.9	Kgs

Additional Specifications:

TerraMAX IE3 Motor

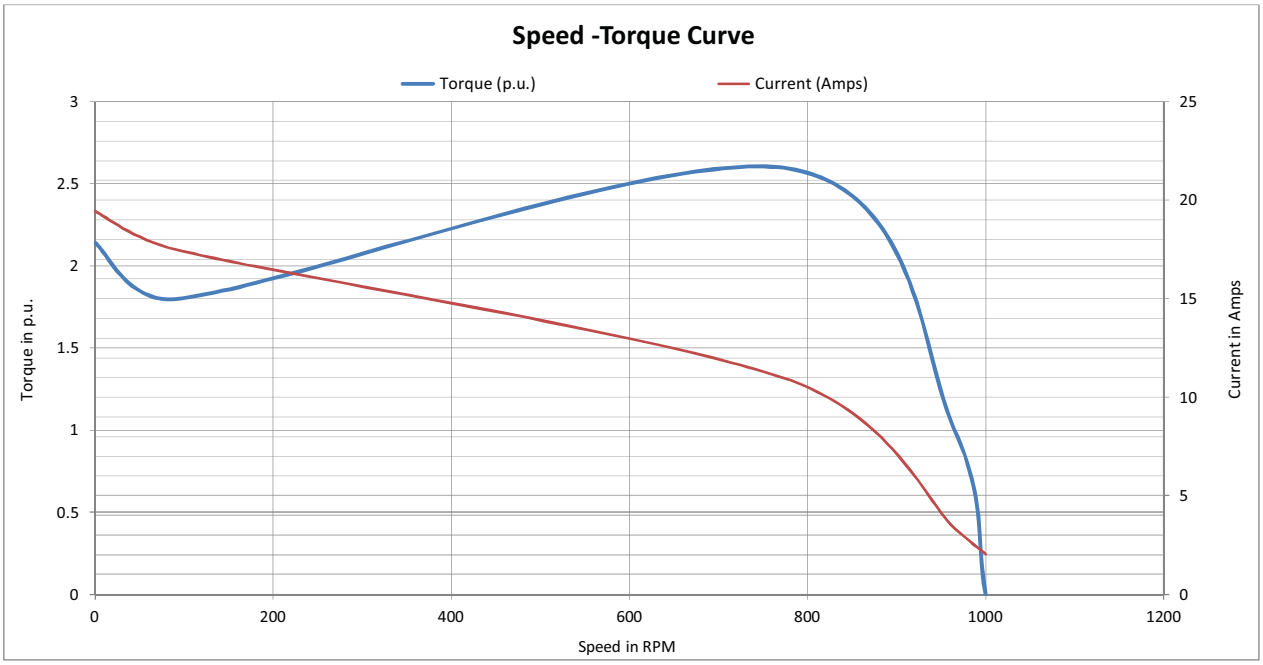

Uncontrolled Copy

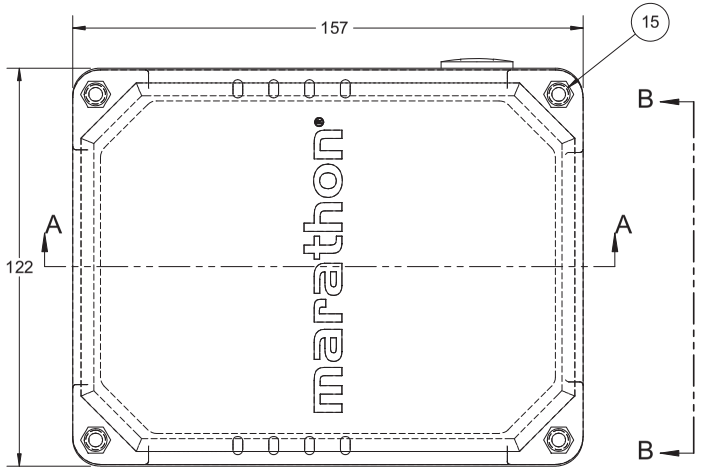

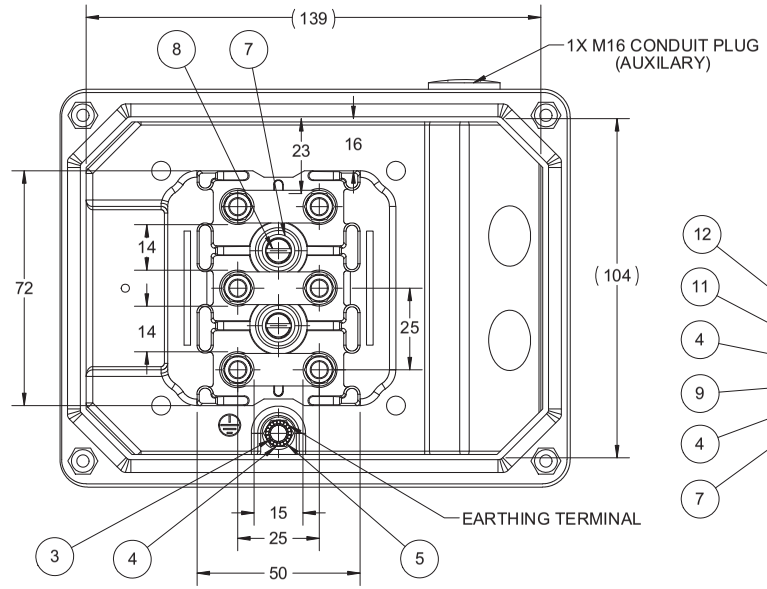

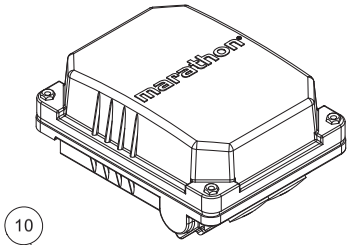

SCALE 1:3

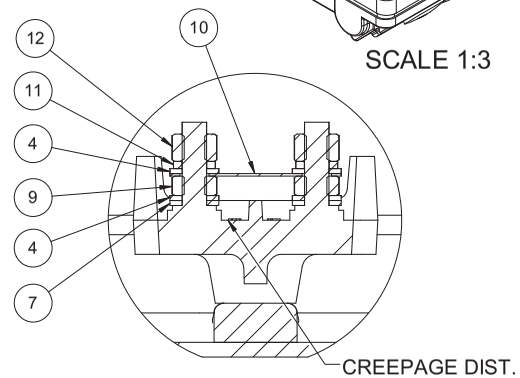

DETAIL C

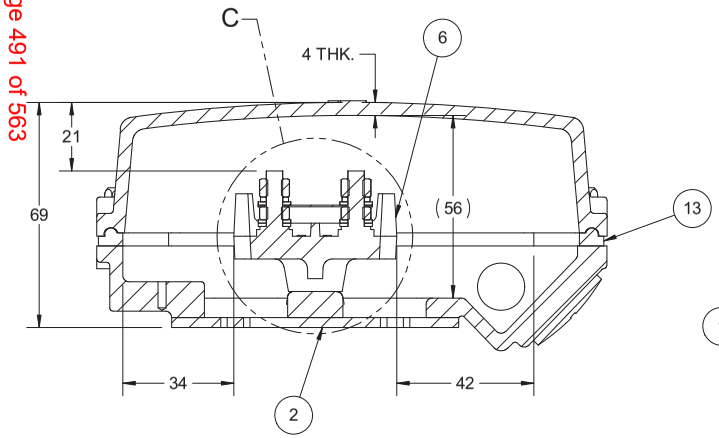

SECTION A-A

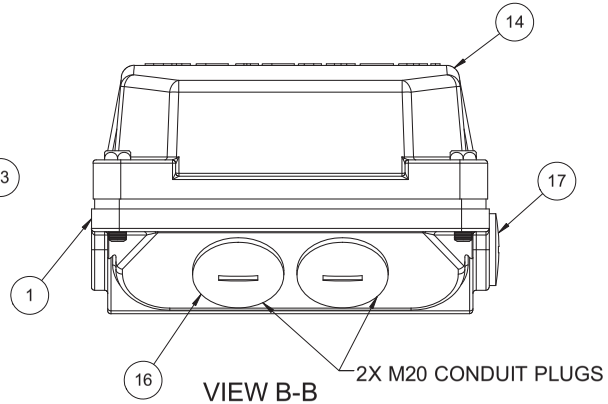

VIEW B-B

BALLOON NUMBER	PART FAMILY	DESCRIPTION	QTY.
1	8351080082	TERMINAL BOX BASE-MACH	1
2	8371080013	GASKET	1
3	423335	M5 - TOOTH WASHER	1
4	423115N	M5 - PLAIN WASHER	13
5	4223215N	M5X10 HEX HD BOLT	1
6	5064080006	TERMINAL BLOCK	1
7	423125	M5 - PLAIN WASHER	8
8	422015	M5X10 PAN CHEESE HD SCREW	2
9	421115	M5 - HEX HD NUT	6
10	8572080002	CONNECTING PLATE	3
11	423225	M5 - SPRING WASHER	6
12	421125N	M5 HEX HD NUT COPPER	6
13	8371080024	GASKET	1
14	8353080028	TERMINAL BOX COVER	1
15	8920000002-001	M5 CAPTIVE SCREW	4
16	8217000003	M20 CONDUIT PLUG	2
17	8217080000	M16 CONDUIT PLUG	1

DRAWING REVISION B	REVISION BY LK	DATE 11/05/2017
ECO ECO-0123509	APPROVED BY JAY	DATE 11/05/2017
ECO DESCRIPTION MODEL UPDATED		

COPYRIGHT REGAL BELOIT AMERICA, INC. ALL RIGHTS RESERVED.
PROPRIETARY AND CONFIDENTIAL INFORMATION - THIS DOCUMENT IS THE PROPERTY OF REGAL BELOIT AMERICA, INC. ("OWNER") AND CONTAINS OWNER'S PROPRIETARY INFORMATION. ANY PERSON, CORPORATION OR OTHER FIRM RECEIVING IT IS DEEMED, BY RECEIVING IT, TO AGREE THAT IT, AND/OR ANY PART OF IT, SHALL NOT BE DISCLOSED TO ANY PERSON, CORPORATION OR OTHER ENTITY, DUPLICATED, AND/OR USED, EXCEPT AS EXPRESSLY APPROVED IN WRITING IN ADVANCE BY OWNER. THIS DOCUMENT SHALL BE RETURNED TO OWNER UPON REQUEST. IT MAY BE SUBJECT TO CERTAIN RESTRICTIONS UNDER APPLICABLE EXPORT CONTROL LAWS AND REGULATIONS.

DRAWN BY	RAF
DATE	15/4/2014
APPROVED BY	SBD
DATE	15/4/2014
REFERENCE	
THIRD ANGLE PROJECTION	

Regal Beloit America, Inc.

DESCRIPTION
TERMINAL BOX ASSY
80-100 FR

MATERIAL | PROCESS/FINISH

SIZE B | DRAWING NUMBER 5354080025 | SHEET 1 OF 1

Uncontrolled Copy

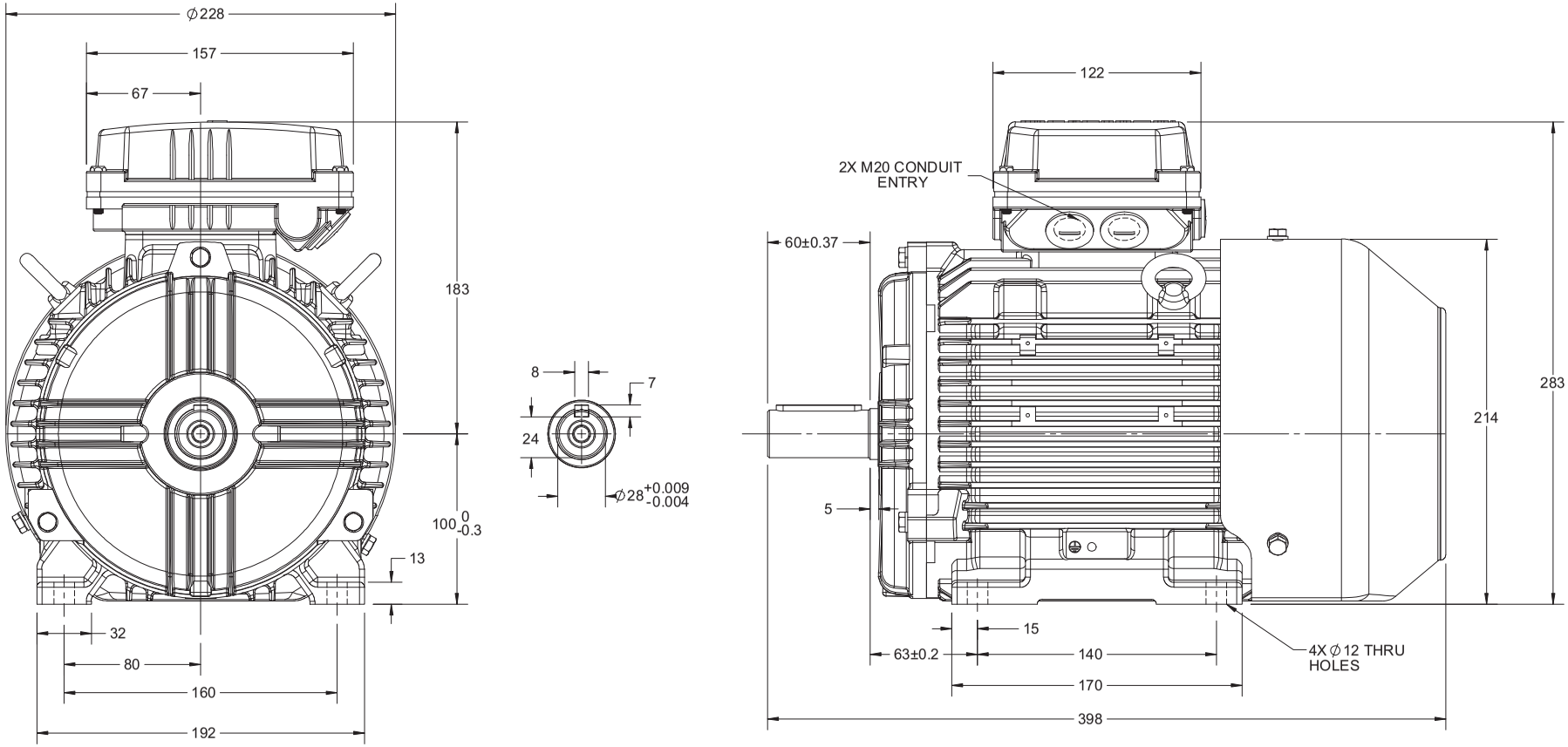

DRAWING REVISION D	REVISION BY S.MUDDA	DATE 22/06/2018		DRAWN BY SMAR	marathon Motors
ECO ECO-0147359	APPROVED BY JAY	DATE 22/06/2018		DATE 01/09/13	
ECO DESCRIPTION OUTLINE UPDATED AS PER NEW 3D STRUCTURE				APPROVED BY JAY	DESCRIPTION OUTLINE 100 FR.- B3 MTG. MOTOR TYPE: TCA/QCA
				DATE 01/09/13	
				REFERENCE	MATERIAL / PROCESS/FINISH
				THIRD ANGLE PROJECTION	SIZE B / DRAWING NUMBER 0210000271 / SHEET 1 OF 1

COPYRIGHT REGAL BELOIT AMERICA, INC. ALL RIGHTS RESERVED.
PROPRIETARY AND CONFIDENTIAL INFORMATION - THIS DOCUMENT IS THE PROPERTY OF REGAL BELOIT AMERICA, INC. ("OWNER") AND CONTAINS OWNER'S PROPRIETARY INFORMATION. ANY PERSON, CORPORATION OR OTHER FIRM RECEIVING IT IS DEEMED, BY RECEIVING IT, TO AGREE THAT IT, AND/OR ANY PART OF IT, SHALL NOT BE DISCLOSED TO ANY PERSON, CORPORATION OR OTHER ENTITY, DUPLICATED, AND/OR USED, EXCEPT AS EXPRESSLY APPROVED IN WRITING IN ADVANCE BY OWNER. THIS DOCUMENT SHALL BE RETURNED TO OWNER UPON REQUEST. IT MAY BE SUBJECT TO CERTAIN RESTRICTIONS UNDER APPLICABLE EXPORT CONTROL LAWS AND REGULATIONS.

LT MOTOR DATA SHEET		**BHEL BHADRADRI**
CLAUSE		
No.	PROJECT & PACKAGE:	IE-3 MOTORS
1	**GENERAL**	
i	Manufacturer & country of origin	MEML & INDIA
ii	Equipment driven by motor	FAN
iii	Motor type	SCIM
iv	Quantity	As per Project requirement
2	**DESIGN & PERFORMANCE DATA**	
i	Frame size	90L
ii	Type of duty	S1
iii	Type of enclosure & method of cooling / Degree of protection	TEFC / IC 411 / IP 55
iv	Applicable standard to which motor generally confirms	IS 12615, IEC 60034, IEC 60030, IS 12075, IS 12065 Etc.
v	Type of mounting	IMB3
vi	Direction of rotation viewed from DE	Bi-Directional
vii	Standard continuous rating at 40 deg.C ambient temp. as per Indian Std. (KW)	NA
viii	Derated rating for specified normal condition i.e. 50 deg. C ambient (KW)	1.1
ix	Rated voltage (volts) & Rated frequency(Hz)	415 / 50
x	Permissible variation of	
a	voltage (volts)	± 10%
b	Frequency (Hz)	± 5%
c	Combined voltage & frequency	10%
xi	Minimum permissible starting voltage(V)	85% OF RATED VOLTAGE
xii	Rated speed at rated voltage & frequency	935
xiii	At rated voltage and frequency	
a	Full load current (A)	2.59
b	No load current (A) (Approx.)	1.82
xiv	Power factor at	
a	100% load & 75% load & 50% load	0.73 / 0.62 / 0.46
b	No load (Approx.)	0.101
c	Starting (Approx.)	0.692
xv	Efficieny (%)at rated voltage & frequency	
a	100% load	81.0
b	75% load	81.0
c	50% load	77.8
xvi	Starting current % FLC at	
a	100% voltage	470%
b	85% voltage	400%
c	80% voltage	376%
xvii	Starting time with minimum permissible Voltage	
a	without driven equipment coupled	< 2 Secs.
b	with driven equipment coupled	5.6
xviii	Safe stall time with 110% of rated voltage	
a	From hot condition in sec.	17
b	From cold condition in sec.	42
xix	Torques - % FLT	
a	Starting torque at min. permissible V starting torq at rated V.	2.15
b	Pull up torque at rated voltage	2.50
c	Pull out torque	3.09
d	Min. accelerating torque available	2.15
e	Rated torque - kg-m	1.15
xx	Stator winding resistance per Ph. (Ω @ 20°C) (Indicative)	6.001
xxi	GD square value of motor - kg-m²	0.018
xxii	No. of permissible successive starts when motor is in hot / cold condition	2 / 3
xxiii		
a	Locked rotor KVA input (Inclusive of Tolerance)	10.5
b	Locked rotor KVA / KW (Inclusive of Tolerance)	9.55

	LT MOTOR DATA SHEET	**BHEL BHADRADRI**
CLAUSE		
No.	PROJECT & PACKAGE:	IE-3 MOTORS
xxiv	Bearings	
a	Type	DE : BALL / NDE : BALL
b	Manufacturer	SKF, FAG or equivalent
c	Self lubricated or forced lubricated	Self Lubricated
d	Recommended lubricants	GREASE
e	Guaranteed life in hours	40,000
f	Whether dial type thermometer provided	NA
g	Oil pressure guage/switch	NA
i	range	NA
ii	Contact Nos. and ratings	NA
iii	Accuracy	NA
xxv	Vibration	
a	Velocity mm/s	AS PER IS 12075
b	Displacement microns	AS PER IS 12075
xxvi	Noise level db(A) at 1 m at no load	AS PER IS 12065
3	**CONSTRUCTIONAL FEATURES**	
i	Stator winding insulation	
a	Class & type	Class F with temperature rise limited to class B /Varnish
b	Tropicalised (Yes/No)	YES
c	Temperature rise over specificed max.	
	i. cold water temp. of 38 deg. C	NA
	ii. Ambient air 50 deg. C.	70° C
d	Method of temperature measurement	RESISTANCE METHOD
e	Stator winding connection	STAR
f	Number of terminals braught out	6
ii	Type of terminal box for	
a	Stator leads	YES
b	space heater	NA
c	Temperature detectors	NA
d	instrument switch etc.	NA
iii.	For main terminal box	
a	Location	TOP
b	Entry of cables	REFER GAD
c	Recommended cable size (to be matched with cable size envisaged by owner)	3C x 2.5 SQMM CU ARMOURED
d	Fault level	50KA for 0.25Sec with suitable back up fuses
iv	Temperature detector for stator winding	NA
a	Type	NA
b	Nos. provided	NA
c	Location	NA
d	make	NA
e	resistance value at 0 deg. C (ohms)	NA
v	space heaters	NA
a	Number	NA
b	Location	NA
c	Power requirement (Watt)	NA
vi	Paint shade	Shade No. 631 as per IS:5
vii	Approx. Weight of	
a	Motor stator	-
b	Motor rotor	-
c	Total weight (kg)	27
4	**CHARACTERISTIC CURVES**	
i	Torque speed characteristic of the motor	ATTACHED
ii	Calibration characteristic of platinum type resistance temperature detector	NA
iii	Calibration characteristic of platinum BTD	NA
iv	Thermal withstand characteristic	ATTACHED
v	Starting current vs. time	ATTACHED
vi	Starting current vs. speed	ATTACHED
vii	Neg. sequence current vs. time	ATTACHED
viii	PF & Efficiency Vs Load.	ATTACHED
NOTE :		

1) ALL PERFORMANCE FIGURES ARE SUBJECT TO IS/IEC TOLERANCES.
2) Fans to be started at closed damper condition only.

Thermal Withstand Curve 100% Voltage

Date:
Customer:
Attention:
Submitted by:

marathon® Motors TerraMAX

TCA 90LA04

IE3 Efficiency

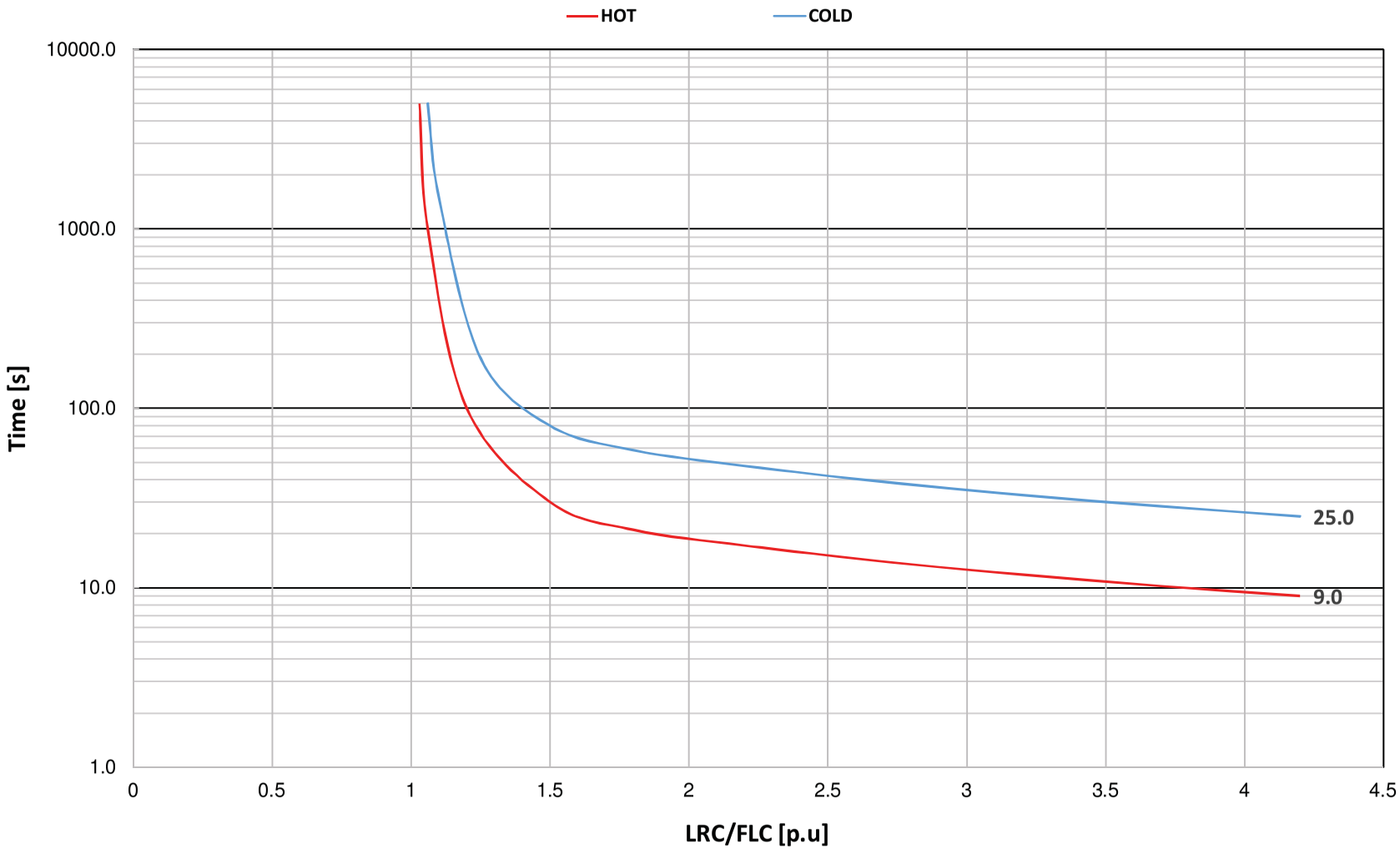

Performance Curves

Date:
Customer:
Attention:
Submitted by:

marathon® Motors TerraMAX™

TCA 90LA06

IE3 Efficiency

Motor Load Data

Load	0%	25%	50%	75%	100%
Current (Amps)	1.82	1.83	1.97	2.22	2.60
Torque (Nm)	0.00	2.72	5.5	8.4	11.4
RPM	1000	984	970	954	935
Efficiency (%)		67.4	77.8	81.0	81.0
P.F. (%)	10.1	31.6	46.0	62.1	72.8

Motor Speed - Torque Data

	LR	Pull-Up	BD	Rated	Idle
Speed (RPM)	0	91	526	935	1000
Current (Amps)	12.2	11.0	9.0	2.60	1.82
Torque (p.u.)	2.64	2.22	2.68	1.00	0.00

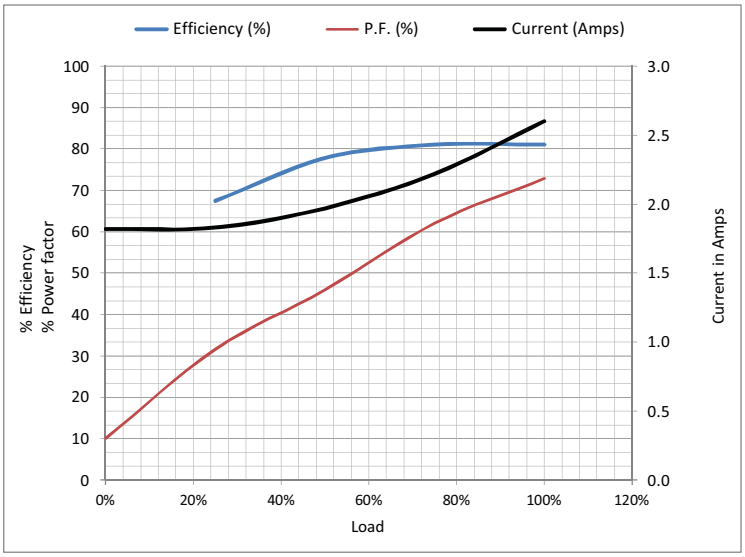

Information Block

kW	1.10	
Sync. RPM	1000	
Frame	90L	
Enclosure	TEFC	
Voltage	415	V
Frequency	50	Hz
Duty	S1	
Ambient	50	° C
Elevation	1,000	meters
Moment of Inertia	0.0046	kg-m²
Motor Weight	27.0	Kgs

Additional Specifications:

TerraMAX IE3 Motor

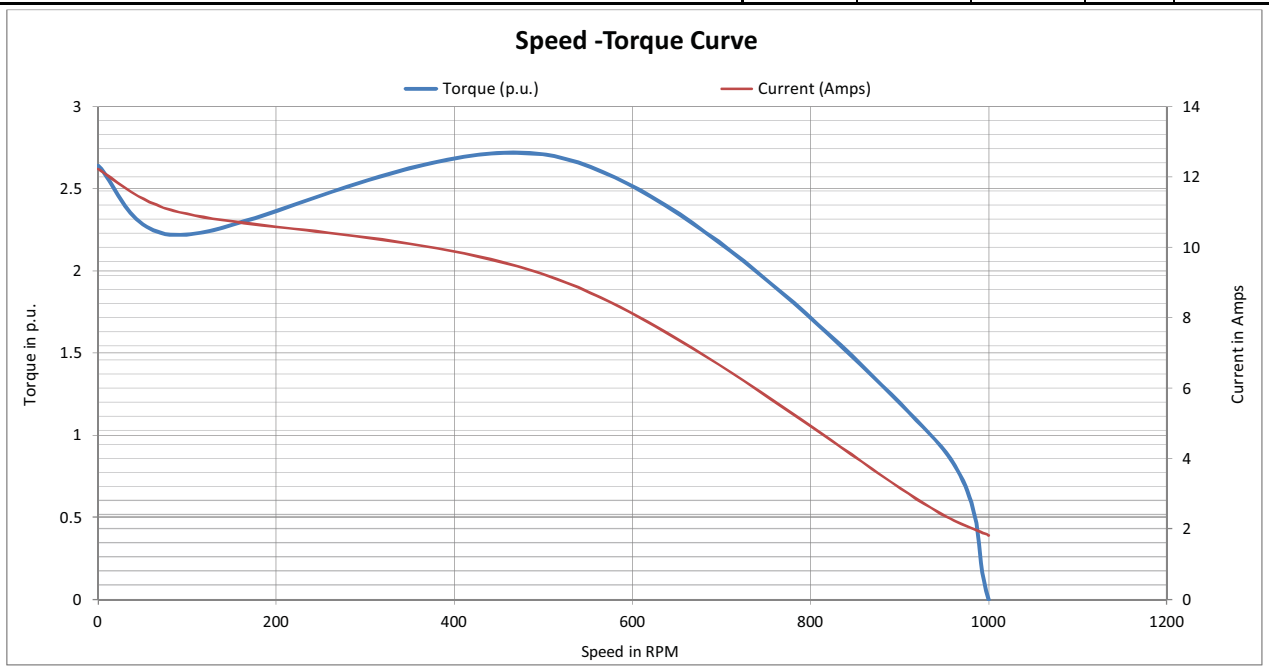

Uncontrolled Copy

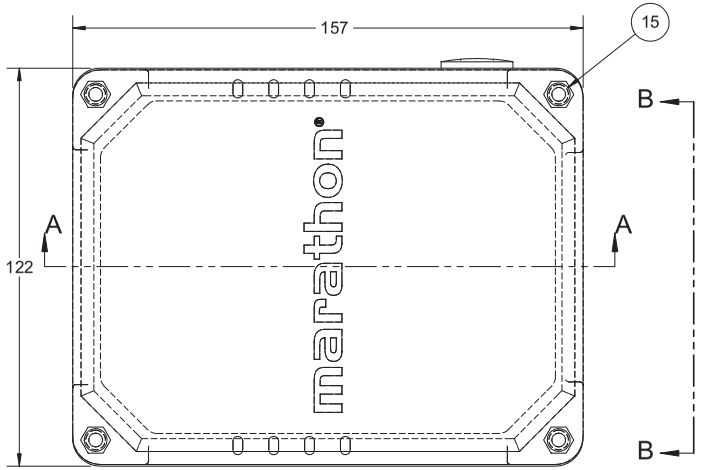

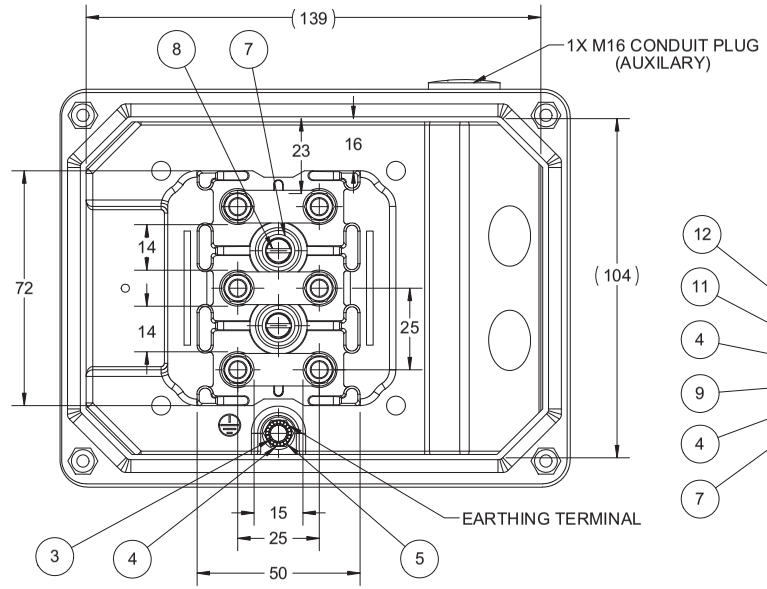

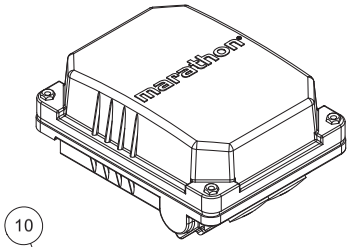

SCALE 1:3

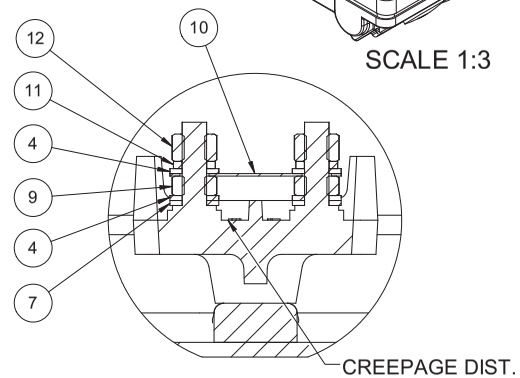

DETAIL C

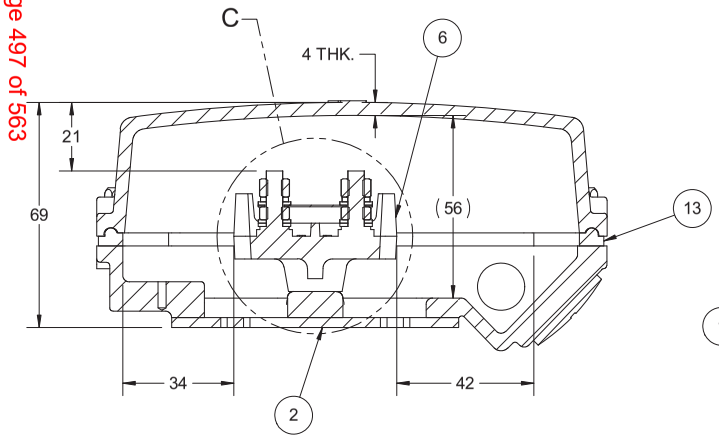

SECTION A-A

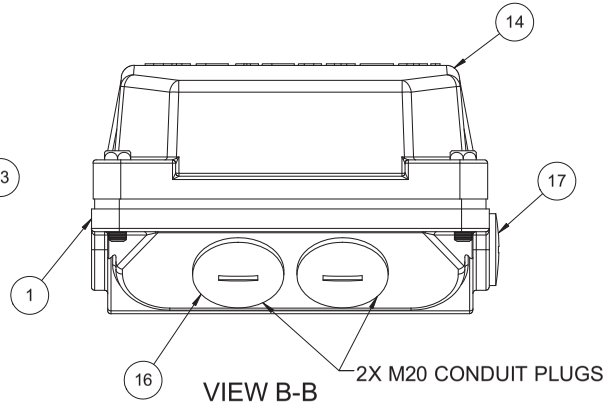

VIEW B-B

BALLOON NUMBER	PART FAMILY	DESCRIPTION	QTY.
1	8351080082	TERMINAL BOX BASE-MACH	1
2	8371080013	GASKET	1
3	423335	M5 - TOOTH WASHER	1
4	423115N	M5 - PLAIN WASHER	13
5	4223215N	M5X10 HEX HD BOLT	1
6	5064080006	TERMINAL BLOCK	1
7	423125	M5 - PLAIN WASHER	8
8	422015	M5X10 PAN CHEESE HD SCREW	2
9	421115	M5 - HEX HD NUT	6
10	8572080002	CONNECTING PLATE	3
11	423225	M5 - SPRING WASHER	6
12	421125N	M5 HEX HD NUT COPPER	6
13	8371080024	GASKET	1
14	8353080028	TERMINAL BOX COVER	1
15	8920000002-001	M5 CAPTIVE SCREW	4
16	8217000003	M20 CONDUIT PLUG	2
17	8217080000	M16 CONDUIT PLUG	1

DRAWING REVISION B	REVISION BY LK	DATE 11/05/2017
ECO ECO-0123509	APPROVED BY JAY	DATE 11/05/2017
ECO DESCRIPTION MODEL UPDATED		

COPYRIGHT REGAL BELOIT AMERICA, INC. ALL RIGHTS RESERVED.
PROPRIETARY AND CONFIDENTIAL INFORMATION - THIS DOCUMENT IS THE PROPERTY OF REGAL BELOIT AMERICA, INC. ("OWNER") AND CONTAINS OWNER'S PROPRIETARY INFORMATION. ANY PERSON, CORPORATION OR OTHER FIRM RECEIVING IT IS DEEMED, BY RECEIVING IT, TO AGREE THAT IT, AND/OR ANY PART OF IT, SHALL NOT BE DISCLOSED TO ANY PERSON, CORPORATION OR OTHER ENTITY, DUPLICATED, AND/OR USED, EXCEPT AS EXPRESSLY APPROVED IN WRITING IN ADVANCE BY OWNER. THIS DOCUMENT SHALL BE RETURNED TO OWNER UPON REQUEST. IT MAY BE SUBJECT TO CERTAIN RESTRICTIONS UNDER APPLICABLE EXPORT CONTROL LAWS AND REGULATIONS.

DRAWN BY	RAF
DATE	15/4/2014
APPROVED BY	SBD
DATE	15/4/2014
REFERENCE	
THIRD ANGLE PROJECTION	

Regal Beloit America, Inc.

DESCRIPTION
TERMINAL BOX ASSY
80-100 FR

MATERIAL | PROCESS/FINISH

SIZE B | DRAWING NUMBER 5354080025 | SHEET 1 OF 1

Uncontrolled Copy

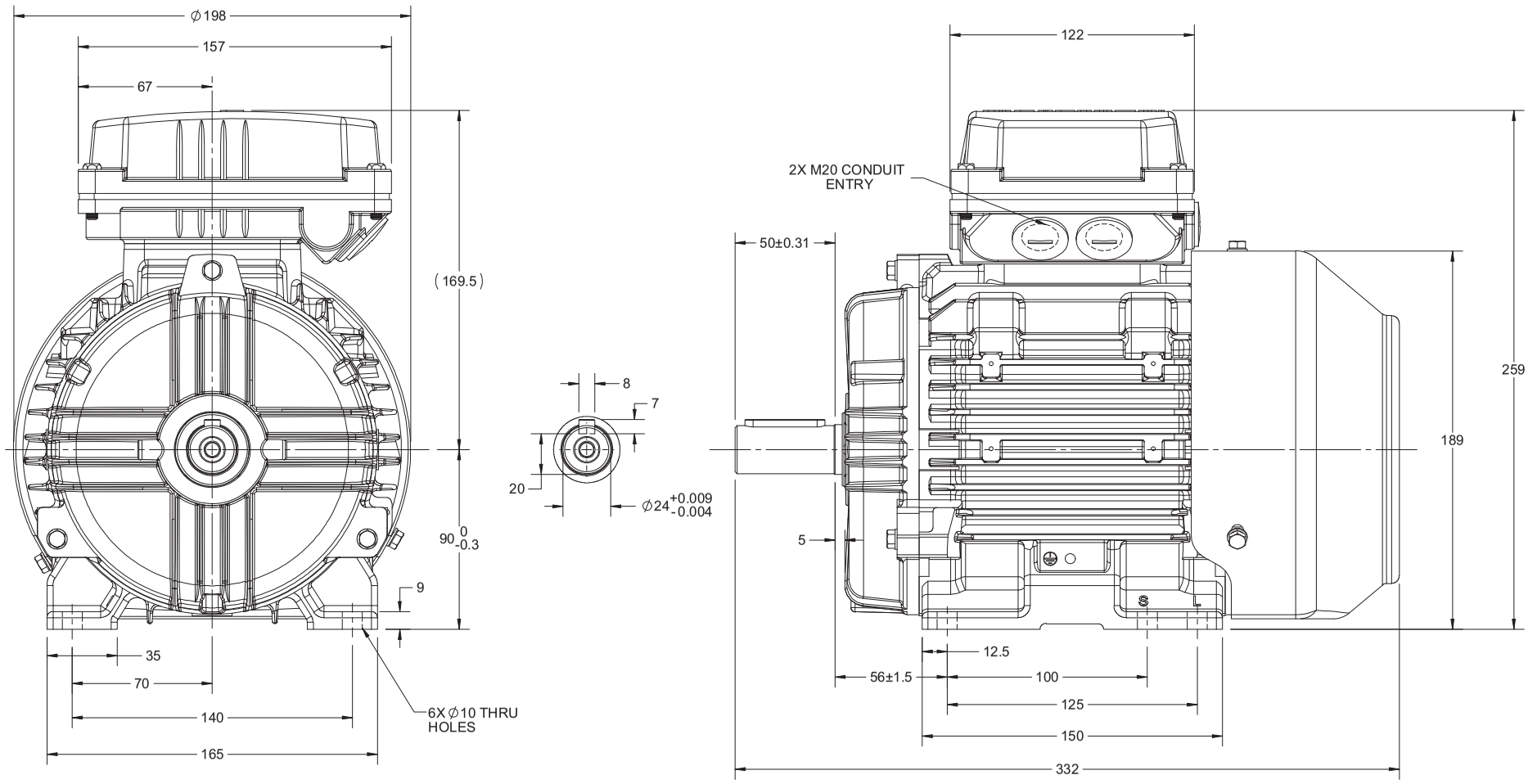

DRAWING REVISION D	REVISION BY A. KEETHA	DATE 26/06/2018		DRAWN BY SMAR	marathon Motors
ECO ECO-0147359	APPROVED BY JAY	DATE 26/06/2018		DATE 1/09/13	
ECO DESCRIPTION OUTLINE UPDATED AS PER NEW 3D STRUCTURING				APPROVED BY JAY	DESCRIPTION OUTLINE 90 FR- B3 MTG. MOTOR TYPE:TCA
				DATE 1/09/13	
				REFERENCE	MATERIAL / PROCESS/FINISH
				THIRD ANGLE PROJECTION	SIZE B / DRAWING NUMBER 0209000395 / SHEET 1 OF 1

COPYRIGHT REGAL BELOIT AMERICA, INC. ALL RIGHTS RESERVED.
PROPRIETARY AND CONFIDENTIAL INFORMATION - THIS DOCUMENT IS THE PROPERTY OF REGAL BELOIT AMERICA, INC. ("OWNER") AND CONTAINS OWNER'S PROPRIETARY INFORMATION. ANY PERSON, CORPORATION OR OTHER FIRM RECEIVING IT IS DEEMED, BY RECEIVING IT, TO AGREE THAT IT, AND/OR ANY PART OF IT, SHALL NOT BE DISCLOSED TO ANY PERSON, CORPORATION OR OTHER ENTITY, DUPLICATED, AND/OR USED, EXCEPT AS EXPRESSLY APPROVED IN WRITING IN ADVANCE BY OWNER. THIS DOCUMENT SHALL BE RETURNED TO OWNER UPON REQUEST. IT MAY BE SUBJECT TO CERTAIN RESTRICTIONS UNDER APPLICABLE EXPORT CONTROL LAWS AND REGULATIONS.

LT MOTOR DATA SHEET		**BHEL BHADRADRI**
CLAUSE		
No.	PROJECT & PACKAGE:	IE-3 MOTORS
1	**GENERAL**	
i	Manufacturer & country of origin	MEML & INDIA
ii	Equipment driven by motor	FAN
iii	Motor type	SCIM
iv	Quantity	As per Project requirement
2	**DESIGN & PERFORMANCE DATA**	
i	Frame size	90S
ii	Type of duty	S1
iii	Type of enclosure & method of cooling / Degree of protection	TEFC / IC 411 / IP 55
iv	Applicable standard to which motor generally confirms	IS 12615, IEC 60034, IEC 60030, IS 12075, IS 12065 Etc.
v	Type of mounting	IMB3
vi	Direction of rotation viewed from DE	Bi-Directional
vii	Standard continuous rating at 40 deg.C ambient temp. as per Indian Std. (KW)	NA
viii	Derated rating for specified normal condition i.e. 50 deg. C ambient (KW)	0.75
ix	Rated voltage (volts) & Rated frequency(Hz)	415 / 50
x	Permissible variation of	
a	voltage (volts)	± 10%
b	Frequency (Hz)	± 5%
c	Combined voltage & frequency	10%
xi	Minimum permissible starting voltage(V)	85% OF RATED VOLTAGE
xii	Rated speed at rated voltage & frequency	944
xiii	At rated voltage and frequency	
a	Full load current (A)	2.00
b	No load current (A) (Approx.)	1.53
xiv	Power factor at	
a	100% load & 75% load & 50% load	0.66 / 0.55 / 0.40
b	No load (Approx.)	0.114
c	Starting (Approx.)	0.699
xv	Efficieny (%)at rated voltage & frequency	
a	100% load	78.9
b	75% load	78.9
c	50% load	73.0
xvi	Starting current % FLC at	
a	100% voltage	490%
b	85% voltage	417%
c	80% voltage	392%
xvii	Starting time with minimum permissible Voltage	
a	without driven equipment coupled	< 2 Secs.
b	with driven equipment coupled	3.7
xviii	Safe stall time with 110% of rated voltage	
a	From hot condition in sec.	22
b	From cold condition in sec.	51
xix	Torques - % FLT	
a	Starting torque at min. permissible V starting torq at rated V.	1.68
b	Pull up torque at rated voltage	1.95
c	Pull out torque	2.40
d	Min. accelerating torque available	1.68
e	Rated torque - kg-m	0.77
xx	Stator winding resistance per Ph. (Ω @ 20°C) (Indicative)	8.243
xxi	GD square value of motor - kg-m²	0.014
xxii	No. of permissible successive starts when motor is in hot / cold condition	2 / 3
xxiii		
a	Locked rotor KVA input (Inclusive of Tolerance)	8.45
b	Locked rotor KVA / KW (Inclusive of Tolerance)	11.3

	LT MOTOR DATA SHEET	**BHEL BHADRADRI**
CLAUSE		
No.	PROJECT & PACKAGE:	IE-3 MOTORS
xxiv	Bearings	
a	Type	DE : BALL / NDE : BALL
b	Manufacturer	SKF, FAG or equivalent
c	Self lubricated or forced lubricated	Self Lubricated
d	Recommended lubricants	GREASE
e	Guaranteed life in hours	40,000
f	Whether dial type thermometer provided	NA
g	Oil pressure guage/switch	NA
i	range	NA
ii	Contact Nos. and ratings	NA
iii	Accuracy	NA
xxv	Vibration	
a	Velocity mm/s	AS PER IS 12075
b	Displacement microns	AS PER IS 12075
xxvi	Noise level db(A) at 1 m at no load	AS PER IS 12065
3	**CONSTRUCTIONAL FEATURES**	
i	Stator winding insulation	
a	Class & type	Class F with temperature rise limited to class B /Varnish
b	Tropicalised (Yes/No)	YES
c	Temperature rise over specificed max.	
	i. cold water temp. of 38 deg. C	NA
	ii. Ambient air 50 deg. C.	70° C
d	Method of temperature measurement	RESISTANCE METHOD
e	Stator winding connection	STAR
f	Number of terminals braught out	6
ii	Type of terminal box for	
a	Stator leads	YES
b	space heater	NA
c	Temperature detectors	NA
d	instrument switch etc.	NA
iii.	For main terminal box	
a	Location	TOP
b	Entry of cables	REFER GAD
c	Recommended cable size (to be matched with cable size envisaged by owner)	3C x 2.5 SQMM CU ARMOURED
d	Fault level	50KA for 0.25Sec with suitable back up fuses
iv	Temperature detector for stator winding	NA
a	Type	NA
b	Nos. provided	NA
c	Location	NA
d	make	NA
e	resistance value at 0 deg. C (ohms)	NA
v	space heaters	NA
a	Number	NA
b	Location	NA
c	Power requirement (Watt)	NA
vi	Paint shade	Shade No. 631 as per IS:5
vii	Approx. Weight of	
a	Motor stator	-
b	Motor rotor	-
c	Total weight (kg)	25
4	**CHARACTERISTIC CURVES**	
i	Torque speed characteristic of the motor	ATTACHED
ii	Calibration characteristic of platinum type resistance temperature detector	NA
iii	Calibration characteristic of platinum BTD	NA
iv	Thermal withstand characteristic	ATTACHED
v	Starting current vs. time	ATTACHED
vi	Starting current vs. speed	ATTACHED
vii	Neg. sequence current vs. time	ATTACHED
viii	PF & Efficiency Vs Load.	ATTACHED
NOTE :		

1) ALL PERFORMANCE FIGURES ARE SUBJECT TO IS/IEC TOLERANCES.
2) Fans to be started at closed damper condition only.

Thermal Withstand Curve 100% Voltage

Date:
Customer:
Attention:
Submitted by:

marathon® Motors TerraMAX

TCA 90SA06

IE3 Efficiency

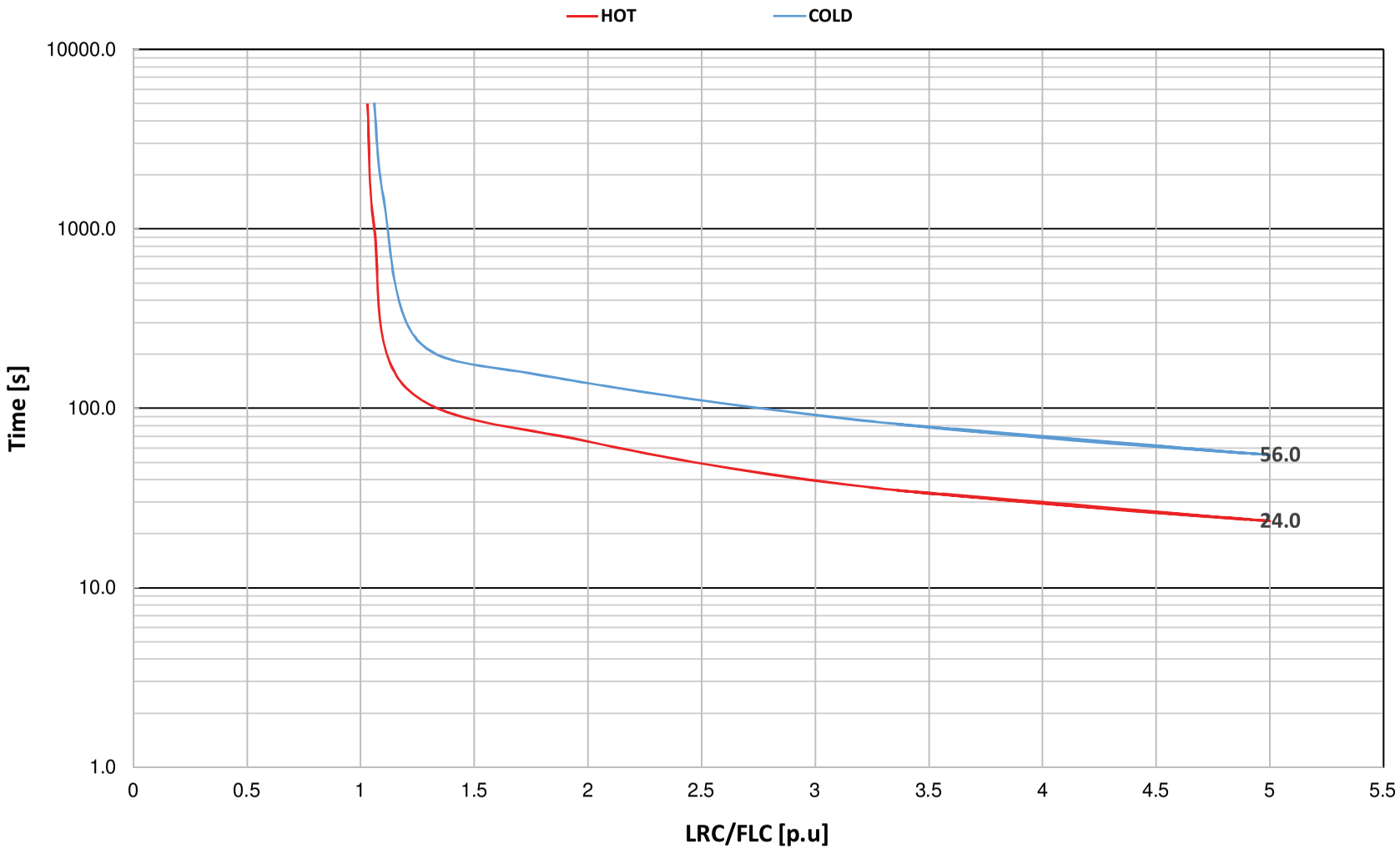

Performance Curves

Date:
Customer:
Attention:
Submitted by:

marathon® Motors TerraMAX™

TCA 90SA06

IE3 Efficiency

Motor Load Data

Load	0%	25%	50%	75%	100%
Current (Amps)	1.53	1.52	1.58	1.71	2.00
Torque (Nm)	0.00	2.45	5.0	7.6	7.5
RPM	1000	986	973	960	944
Efficiency (%)		59.8	73.0	78.9	78.9
P.F. (%)	11.4	28.5	39.5	54.7	66.1

Motor Speed - Torque Data

	LR	Pull-Up	BD	Rated	Idle
Speed (RPM)	0	91	544	944	1000
Current (Amps)	9.8	8.8	6.8	2.00	1.53
Torque (p.u.)	2.96	2.49	3.1	1.00	0.00

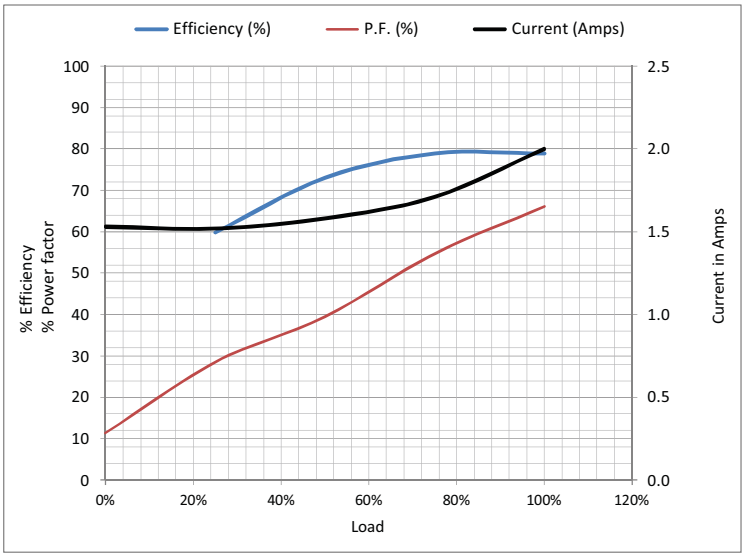

Information Block

kW	0.75	
Sync. RPM	1000	
Frame	90S	
Enclosure	TEFC	
Voltage	415	V
Frequency	50	Hz
Duty	S1	
Ambient	50	° C
Elevation	1,000	meters
Moment of Inertia	0.0036	kg-m²
Motor Weight	24.5	Kgs

Additional Specifications:

TerraMAX IE3 Motor

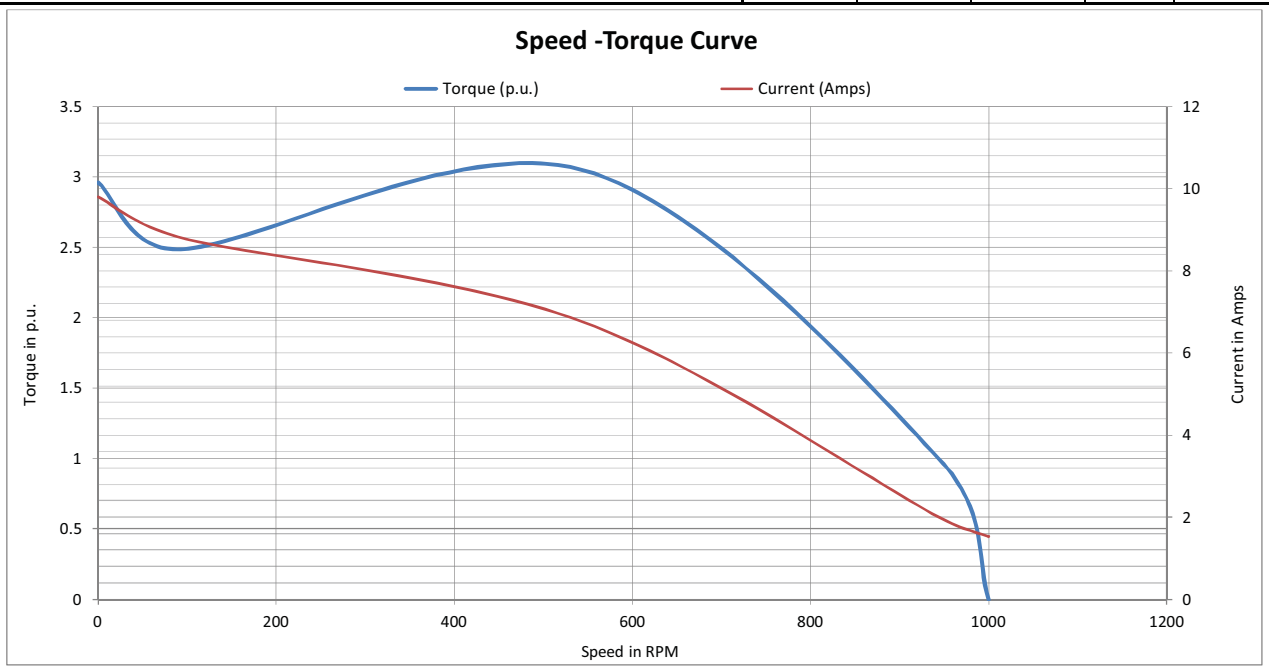

Uncontrolled Copy

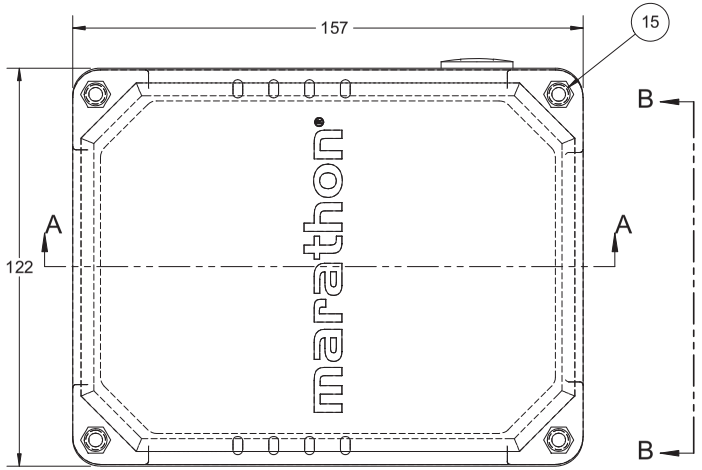

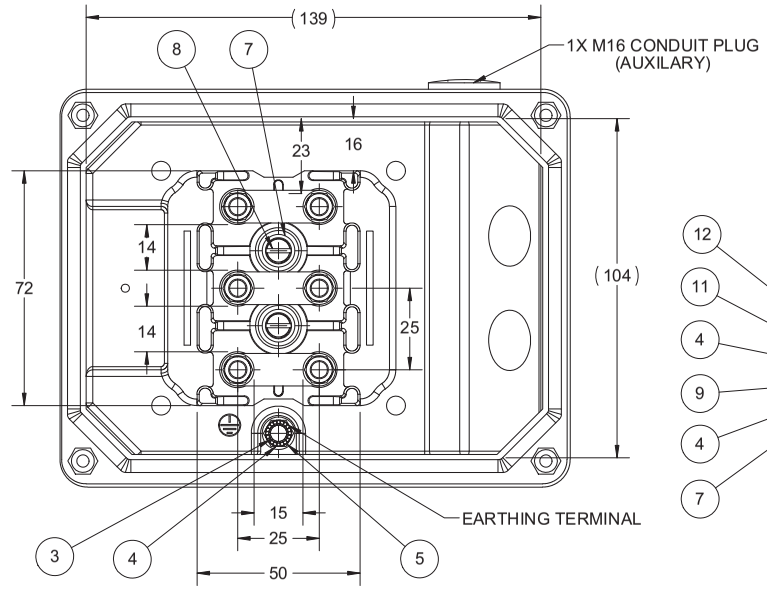

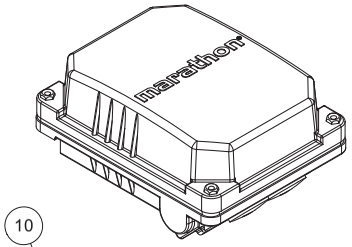

SCALE 1:3

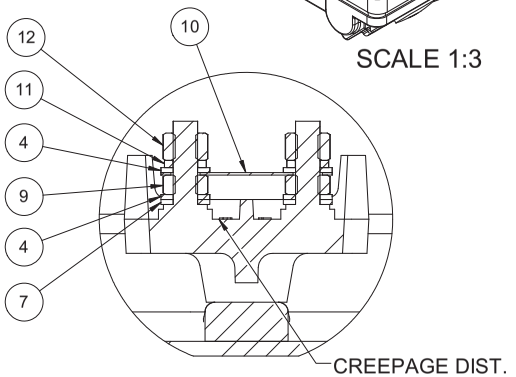

DETAIL C

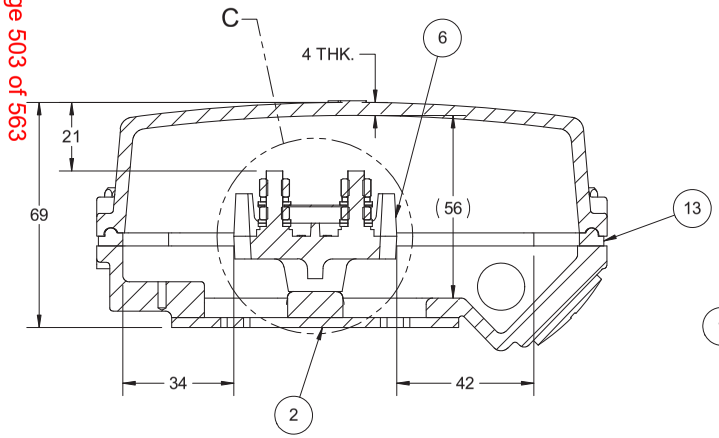

SECTION A-A

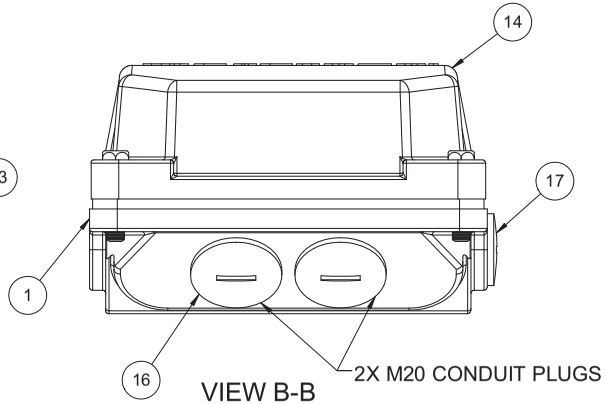

VIEW B-B

BALLOON NUMBER	PART FAMILY	DESCRIPTION	QTY.
1	8351080082	TERMINAL BOX BASE-MACH	1
2	8371080013	GASKET	1
3	423335	M5 - TOOTH WASHER	1
4	423115N	M5 - PLAIN WASHER	13
5	4223215N	M5X10 HEX HD BOLT	1
6	5064080006	TERMINAL BLOCK	1
7	423125	M5 - PLAIN WASHER	8
8	422015	M5X10 PAN CHEESE HD SCREW	2
9	421115	M5 - HEX HD NUT	6
10	8572080002	CONNECTING PLATE	3
11	423225	M5 - SPRING WASHER	6
12	421125N	M5 HEX HD NUT COPPER	6
13	8371080024	GASKET	1
14	8353080028	TERMINAL BOX COVER	1
15	8920000002-001	M5 CAPTIVE SCREW	4
16	8217000003	M20 CONDUIT PLUG	2
17	8217080000	M16 CONDUIT PLUG	1

DRAWING REVISION B	REVISION BY LK	DATE 11/05/2017
ECO ECO-0123509	APPROVED BY JAY	DATE 11/05/2017
ECO DESCRIPTION MODEL UPDATED		

COPYRIGHT REGAL BELOIT AMERICA, INC. ALL RIGHTS RESERVED.
PROPRIETARY AND CONFIDENTIAL INFORMATION - THIS DOCUMENT IS THE PROPERTY OF REGAL BELOIT AMERICA, INC. ("OWNER") AND CONTAINS OWNER'S PROPRIETARY INFORMATION. ANY PERSON, CORPORATION OR OTHER FIRM RECEIVING IT IS DEEMED, BY RECEIVING IT, TO AGREE THAT IT, AND/OR ANY PART OF IT, SHALL NOT BE DISCLOSED TO ANY PERSON, CORPORATION OR OTHER ENTITY, DUPLICATED, AND/OR USED, EXCEPT AS EXPRESSLY APPROVED IN WRITING IN ADVANCE BY OWNER. THIS DOCUMENT SHALL BE RETURNED TO OWNER UPON REQUEST. IT MAY BE SUBJECT TO CERTAIN RESTRICTIONS UNDER APPLICABLE EXPORT CONTROL LAWS AND REGULATIONS.

DRAWN BY	RAF
DATE	15/4/2014
APPROVED BY	SBD
DATE	15/4/2014
REFERENCE	
THIRD ANGLE PROJECTION	

Regal Beloit America, Inc.

DESCRIPTION
TERMINAL BOX ASSY
80-100 FR

MATERIAL | PROCESS/FINISH

SIZE B | DRAWING NUMBER 5354080025 | SHEET 1 OF 1

Uncontrolled Copy

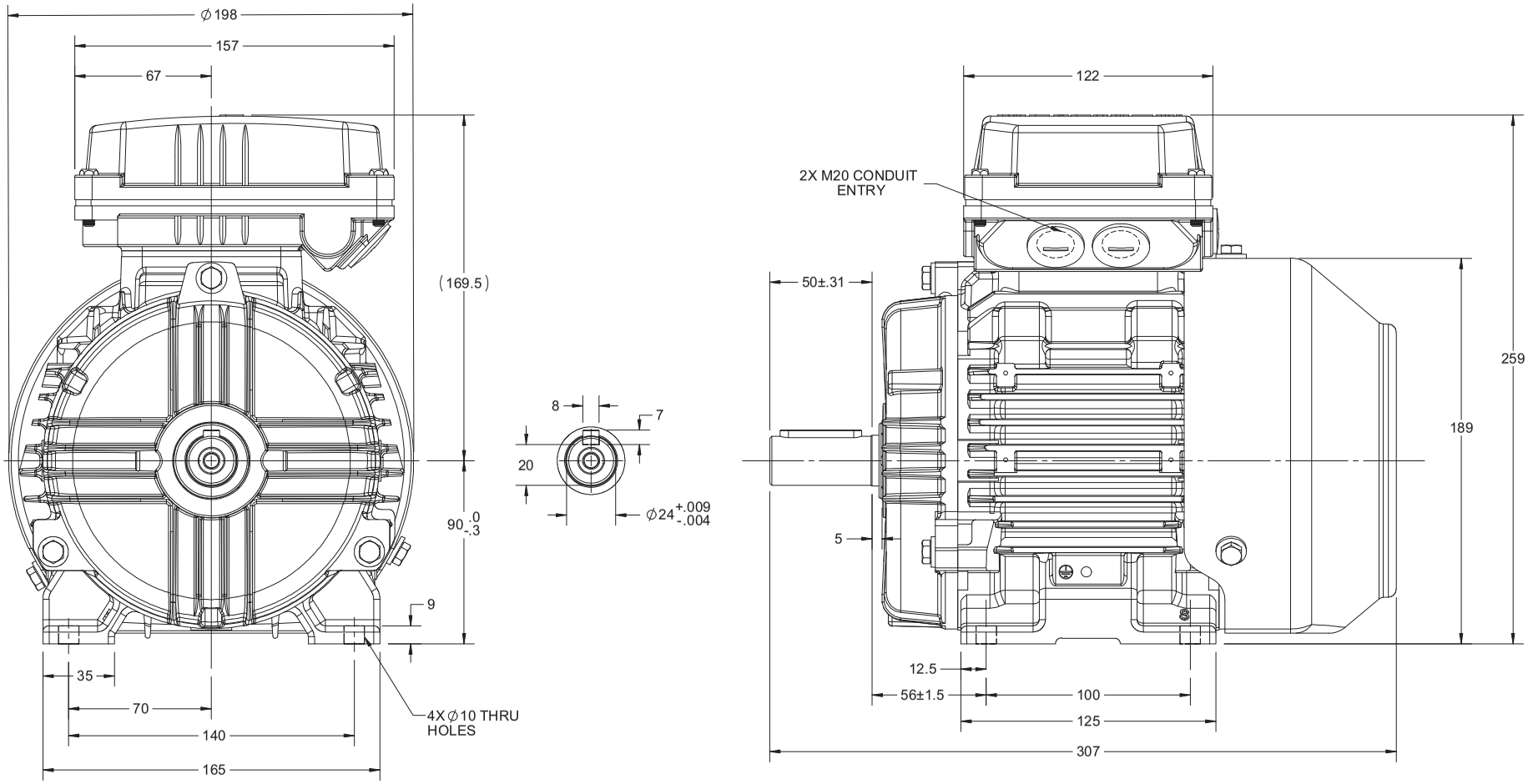

DRAWING REVISION D	REVISION BY I. RAMDAS	DATE 29/06/2018		DRAWN BY RAF	marathon Motors
ECO ECO-0147359	APPROVED BY JAY	DATE 29/06/2018		DATE 07/11/2014	
ECO DESCRIPTION OUTLINE UPDATE AS PER 3D STRUCTURING				APPROVED BY KRK	DESCRIPTION OUTLINE 90-S FR- B3 MTG. MOTOR TYPE:TCA/QCA
				DATE 07/11/2014	
				REFERENCE	MATERIAL / PROCESS/FINISH
				THIRD ANGLE PROJECTION	SIZE B / DRAWING NUMBER 0209000426 / SHEET 1 OF 1

COPYRIGHT REGAL BELOIT AMERICA, INC. ALL RIGHTS RESERVED.
PROPRIETARY AND CONFIDENTIAL INFORMATION - THIS DOCUMENT IS THE PROPERTY OF REGAL BELOIT AMERICA, INC. ("OWNER") AND CONTAINS OWNER'S PROPRIETARY INFORMATION. ANY PERSON, CORPORATION OR OTHER FIRM RECEIVING IT IS DEEMED, BY RECEIVING IT, TO AGREE THAT IT, AND/OR ANY PART OF IT, SHALL NOT BE DISCLOSED TO ANY PERSON, CORPORATION OR OTHER ENTITY, DUPLICATED, AND/OR USED, EXCEPT AS EXPRESSLY APPROVED IN WRITING IN ADVANCE BY OWNER. THIS DOCUMENT SHALL BE RETURNED TO OWNER UPON REQUEST. IT MAY BE SUBJECT TO CERTAIN RESTRICTIONS UNDER APPLICABLE EXPORT CONTROL LAWS AND REGULATIONS.

LT MOTOR DATA SHEET		**BHEL BHADRADRI**
CLAUSE		
No.	PROJECT & PACKAGE:	IE-3 MOTORS
1	**GENERAL**	
i	Manufacturer & country of origin	MEML & INDIA
ii	Equipment driven by motor	FAN
iii	Motor type	SCIM
iv	Quantity	As per Project requirement
2	**DESIGN & PERFORMANCE DATA**	
i	Frame size	80M
ii	Type of duty	S1
iii	Type of enclosure & method of cooling / Degree of protection	TEFC / IC 411 / IP 55
iv	Applicable standard to which motor generally confirms	IS 12615, IEC 60034, IEC 60030, IS 12075, IS 12065 Etc.
v	Type of mounting	IMB3
vi	Direction of rotation viewed from DE	Bi-Directional
vii	Standard continuous rating at 40 deg.C ambient temp. as per Indian Std. (KW)	NA
viii	Derated rating for specified normal condition i.e. 50 deg. C ambient (KW)	0.55
ix	Rated voltage (volts) & Rated frequency(Hz)	415 / 50
x	Permissible variation of	
a	voltage (volts)	± 10%
b	Frequency (Hz)	± 5%
c	Combined voltage & frequency	10%
xi	Minimum permissible starting voltage(V)	85% OF RATED VOLTAGE
xii	Rated speed at rated voltage & frequency	929
xiii	At rated voltage and frequency	
a	Full load current (A)	1.40
b	No load current (A) (Approx.)	0.87
xiv	Power factor at	
a	100% load & 75% load & 50% load	0.72 / 0.62 / 0.48
b	No load (Approx.)	0.124
c	Starting (Approx.)	0.673
xv	Efficieny (%)at rated voltage & frequency	
a	100% load	75.9
b	75% load	75.9
c	50% load	74.4
xvi	Starting current % FLC at	
a	100% voltage	440%
b	85% voltage	374%
c	80% voltage	352%
xvii	Starting time with minimum permissible Voltage	
a	without driven equipment coupled	< 2 Secs.
b	with driven equipment coupled	2.0
xviii	Safe stall time with 110% of rated voltage	
a	From hot condition in sec.	22
b	From cold condition in sec.	51
xix	Torques - % FLT	
a	Starting torque at min. permissible V starting torq at rated V.	1.00
b	Pull up torque at rated voltage	1.16
c	Pull out torque	1.44
d	Min. accelerating torque available	1.00
e	Rated torque - kg-m	0.58
xx	Stator winding resistance per Ph. (Ω @ 20°C) (Indicative)	12.26
xxi	GD square value of motor - kg-m²	0.015
xxii	No. of permissible successive starts when motor is in hot / cold condition	2 / 3
xxiii		
a	Locked rotor KVA input (Inclusive of Tolerance)	5.31
b	Locked rotor KVA / KW (Inclusive of Tolerance)	9.7

	LT MOTOR DATA SHEET	**BHEL BHADRADRI**
CLAUSE		
No.	PROJECT & PACKAGE:	IE-3 MOTORS
xxiv	Bearings	
a	Type	DE : BALL / NDE : BALL
b	Manufacturer	SKF, FAG or equivalent
c	Self lubricated or forced lubricated	Self Lubricated
d	Recommended lubricants	GREASE
e	Guaranteed life in hours	40,000
f	Whether dial type thermometer provided	NA
g	Oil pressure guage/switch	NA
i	range	NA
ii	Contact Nos. and ratings	NA
iii	Accuracy	NA
xxv	Vibration	
a	Velocity mm/s	AS PER IS 12075
b	Displacement microns	AS PER IS 12075
xxvi	Noise level db(A) at 1 m at no load	AS PER IS 12065
3	**CONSTRUCTIONAL FEATURES**	
i	Stator winding insulation	
a	Class & type	Class F with temperature rise limited to class B /Varnish
b	Tropicalised (Yes/No)	YES
c	Temperature rise over specificed max.	
	i. cold water temp. of 38 deg. C	NA
	ii. Ambient air 50 deg. C.	70° C
d	Method of temperature measurement	RESISTANCE METHOD
e	Stator winding connection	STAR
f	Number of terminals braught out	6
ii	Type of terminal box for	
a	Stator leads	YES
b	space heater	NA
c	Temperature detectors	NA
d	instrument switch etc.	NA
iii.	For main terminal box	
a	Location	TOP
b	Entry of cables	REFER GAD
c	Recommended cable size (to be matched with cable size envisaged by owner)	3C x 2.5 SQMM CU ARMOURED
d	Fault level	50KA for 0.25Sec with suitable back up fuses
iv	Temperature detector for stator winding	NA
a	Type	NA
b	Nos. provided	NA
c	Location	NA
d	make	NA
e	resistance value at 0 deg. C (ohms)	NA
v	space heaters	NA
a	Number	NA
b	Location	NA
c	Power requirement (Watt)	NA
vi	Paint shade	Shade No. 631 as per IS:5
vii	Approx. Weight of	
a	Motor stator	-
b	Motor rotor	-
c	Total weight (kg)	25
4	**CHARACTERISTIC CURVES**	
i	Torque speed characteristic of the motor	ATTACHED
ii	Calibration characteristic of platinum type resistance temperature detector	NA
iii	Calibration characteristic of platinum BTD	NA
iv	Thermal withstand characteristic	ATTACHED
v	Starting current vs. time	ATTACHED
vi	Starting current vs. speed	ATTACHED
vii	Neg. sequence current vs. time	ATTACHED
viii	PF & Efficiency Vs Load.	ATTACHED
NOTE :		

1) ALL PERFORMANCE FIGURES ARE SUBJECT TO IS/IEC TOLERANCES.
2) Fans to be started at closed damper condition only.

Thermal Withstand Curve 100% Voltage

Date:
Customer:
Attention:
Submitted by:

marathon® Motors TerraMAX

TCA 80MA06

IE3 Efficiency

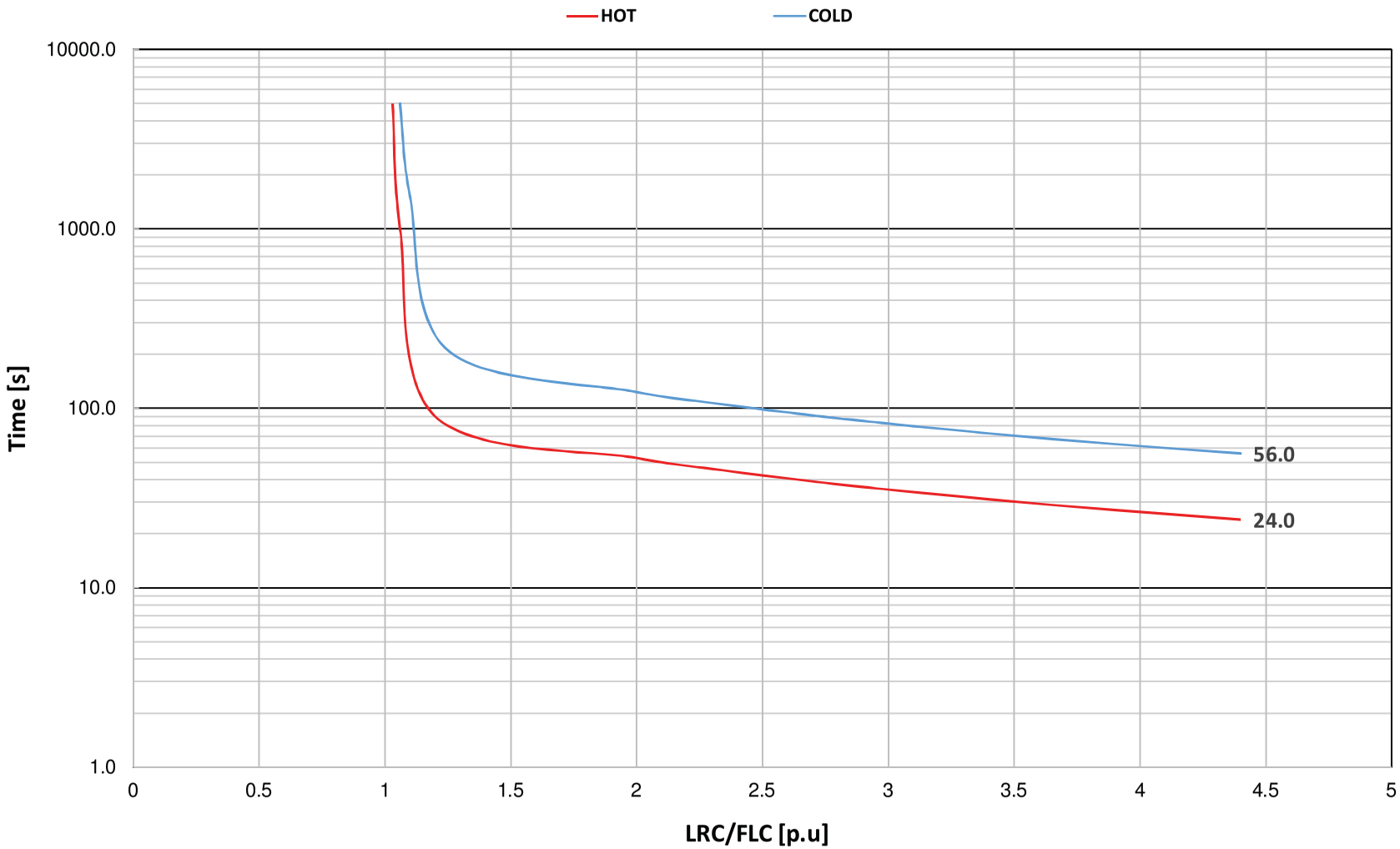

Performance Curves

Date:
Customer:
Attention:
Submitted by:

marathon® Motors TerraMAX™

TCA 80MA06

IE3 Efficiency

Motor Load Data

Load	0%	25%	50%	75%	100%
Current (Amps)	0.87	0.90	1.07	1.22	1.40
Torque (Nm)	0.00	1.85	3.8	5.7	5.8
RPM	1000	983	968	950	929
Efficiency (%)		63.2	74.4	75.9	75.9
P.F. (%)	12.4	34.2	48.0	62.0	72.0

Motor Speed - Torque Data

	LR	Pull-Up	BD	Rated	Idle
Speed (RPM)	0	91	520	929	1000
Current (Amps)	6.2	5.5	4.4	1.40	0.87
Torque (p.u.)	2.40	2.02	2.50	1.00	0.00

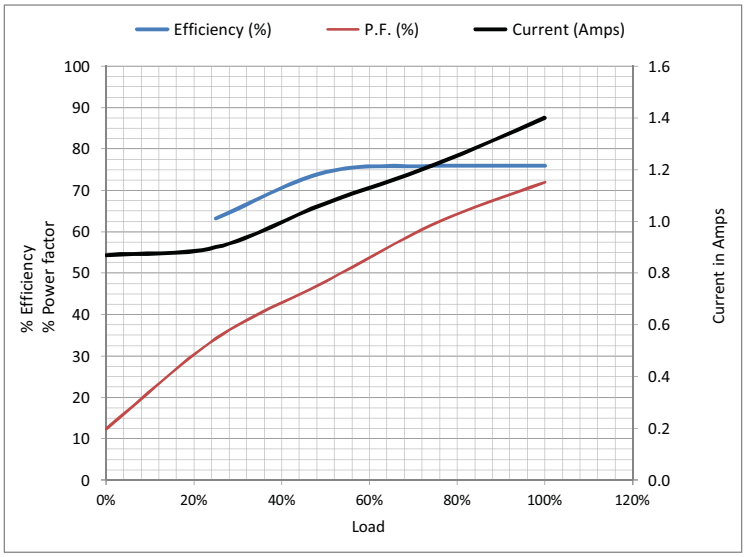

Information Block

kW	0.55	
Sync. RPM	1000	
Frame	80M	
Enclosure	TEFC	
Voltage	415	V
Frequency	50	Hz
Duty	S1	
Ambient	50	° C
Elevation	1,000	meters
Moment of Inertia	0.0038	kg-m²
Motor Weight	24.5	Kgs

Additional Specifications:

TerraMAX IE3 Motor

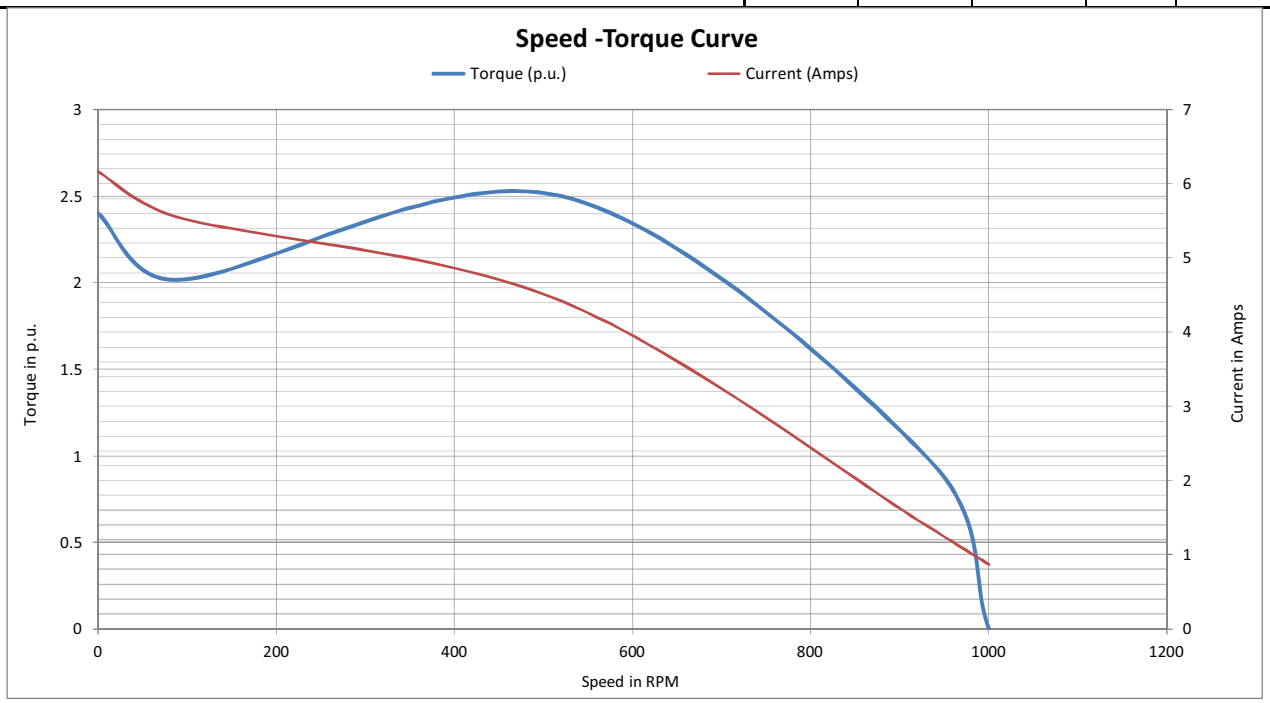

Uncontrolled Copy

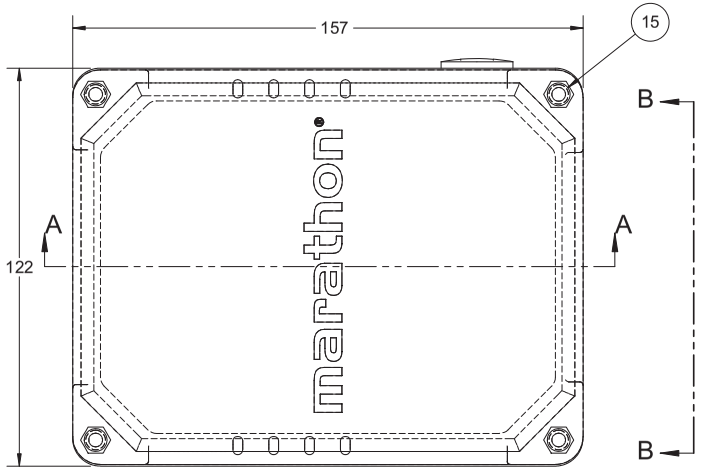

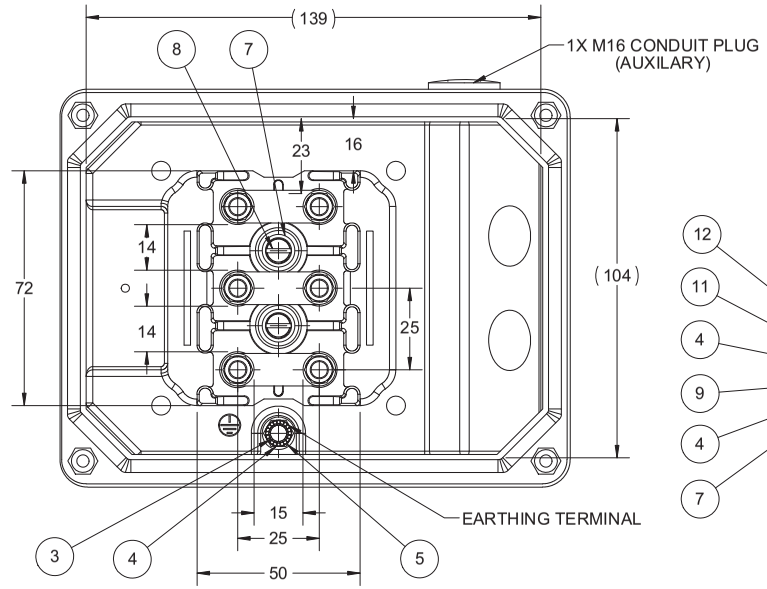

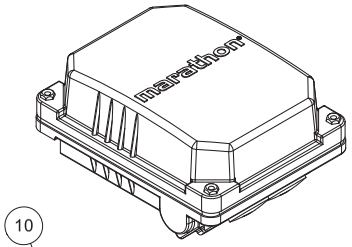

SCALE 1:3

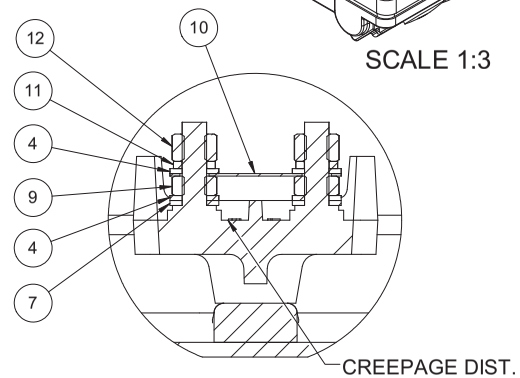

DETAIL C

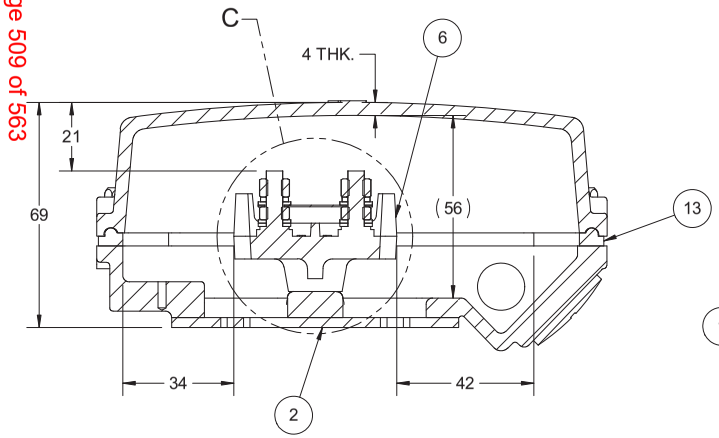

SECTION A-A

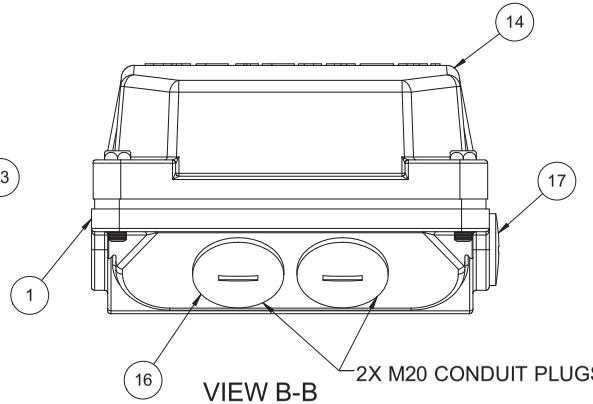

VIEW B-B

BALLOON NUMBER	PART FAMILY	DESCRIPTION	QTY.
1	8351080082	TERMINAL BOX BASE-MACH	1
2	8371080013	GASKET	1
3	423335	M5 - TOOTH WASHER	1
4	423115N	M5 - PLAIN WASHER	13
5	4223215N	M5X10 HEX HD BOLT	1
6	5064080006	TERMINAL BLOCK	1
7	423125	M5 - PLAIN WASHER	8
8	422015	M5X10 PAN CHEESE HD SCREW	2
9	421115	M5 - HEX HD NUT	6
10	8572080002	CONNECTING PLATE	3
11	423225	M5 - SPRING WASHER	6
12	421125N	M5 HEX HD NUT COPPER	6
13	8371080024	GASKET	1
14	8353080028	TERMINAL BOX COVER	1
15	8920000002-001	M5 CAPTIVE SCREW	4
16	8217000003	M20 CONDUIT PLUG	2
17	8217080000	M16 CONDUIT PLUG	1

DRAWING REVISION B	REVISION BY LK	DATE 11/05/2017
ECO ECO-0123509	APPROVED BY JAY	DATE 11/05/2017
ECO DESCRIPTION MODEL UPDATED		

COPYRIGHT REGAL BELOIT AMERICA, INC. ALL RIGHTS RESERVED.
PROPRIETARY AND CONFIDENTIAL INFORMATION - THIS DOCUMENT IS THE PROPERTY OF REGAL BELOIT AMERICA, INC. ("OWNER") AND CONTAINS OWNER'S PROPRIETARY INFORMATION. ANY PERSON, CORPORATION OR OTHER FIRM RECEIVING IT IS DEEMED, BY RECEIVING IT, TO AGREE THAT IT, AND/OR ANY PART OF IT, SHALL NOT BE DISCLOSED TO ANY PERSON, CORPORATION OR OTHER ENTITY, DUPLICATED, AND/OR USED, EXCEPT AS EXPRESSLY APPROVED IN WRITING IN ADVANCE BY OWNER. THIS DOCUMENT SHALL BE RETURNED TO OWNER UPON REQUEST. IT MAY BE SUBJECT TO CERTAIN RESTRICTIONS UNDER APPLICABLE EXPORT CONTROL LAWS AND REGULATIONS.

DRAWN BY RAF	Regal Beloit America, Inc.
DATE 15/4/2014	
APPROVED BY SBD	DESCRIPTION TERMINAL BOX ASSY 80-100 FR
DATE 15/4/2014	
REFERENCE	MATERIAL / PROCESS/FINISH
THIRD ANGLE PROJECTION	SIZE B / DRAWING NUMBER 5354080025 / SHEET 1 OF 1

Uncontrolled Copy

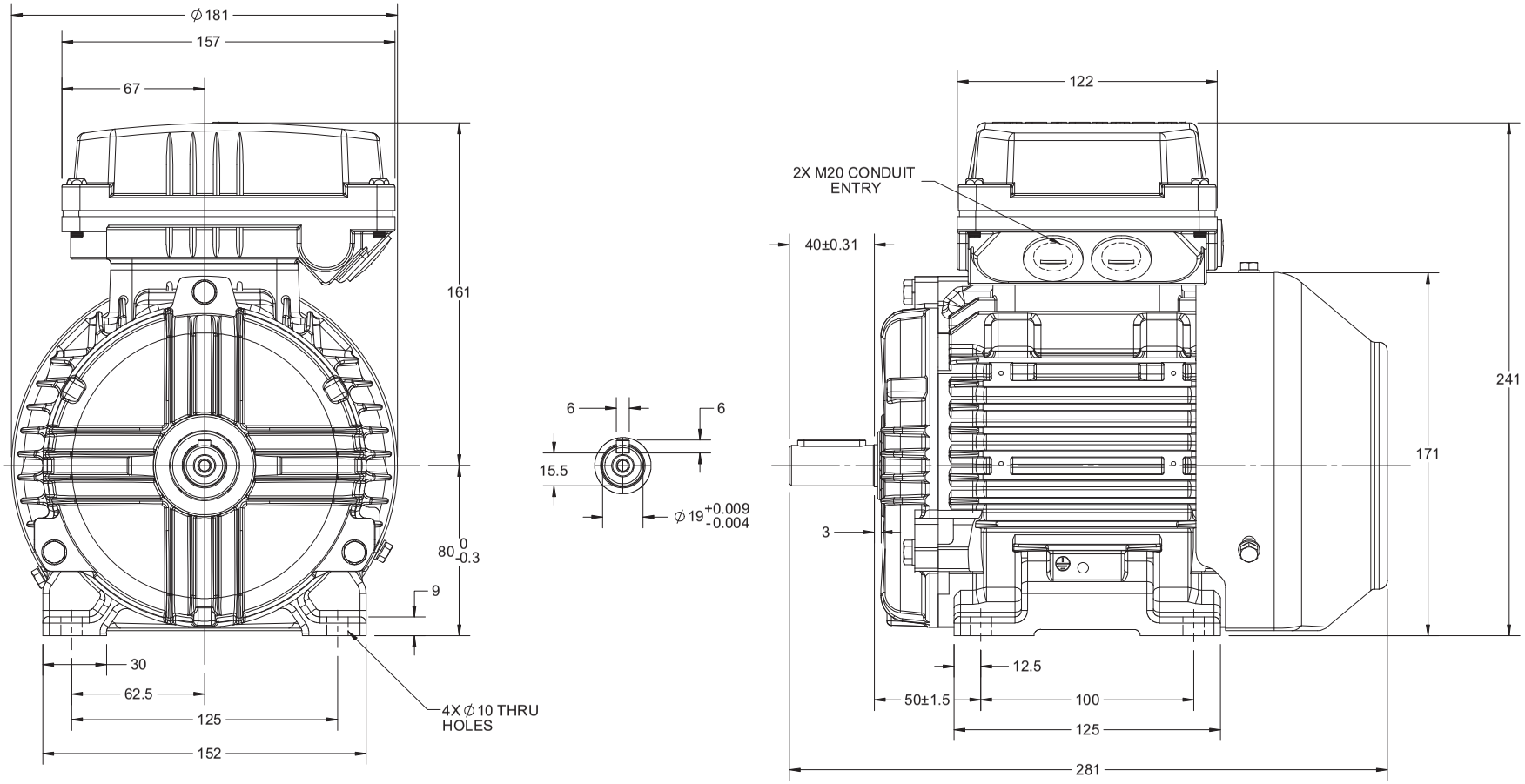

DRAWING REVISION C	REVISION BY S.MUDDA	DATE 20/06/2018		DRAWN BY SMAR	marathon Motors
ECO ECO-0147359	APPROVED BY JAY	DATE 20/06/2018		DATE 21/06/2013	
ECO DESCRIPTION OUTLINE UPDATED AS PER THE NEW 3D STRUCTURING				APPROVED BY JAY	DESCRIPTION OUTLINE 80 FR- B3 MTG. MOTOR TYPE TCA/QCA
				DATE 30/08/2013	
				REFERENCE	MATERIAL / PROCESS/FINISH
				THIRD ANGLE PROJECTION	SIZE B / DRAWING NUMBER 0208000179 / SHEET 1 OF 1

COPYRIGHT REGAL BELOIT AMERICA, INC. ALL RIGHTS RESERVED.
PROPRIETARY AND CONFIDENTIAL INFORMATION - THIS DOCUMENT IS THE PROPERTY OF REGAL BELOIT AMERICA, INC. ("OWNER") AND CONTAINS OWNER'S PROPRIETARY INFORMATION. ANY PERSON, CORPORATION OR OTHER FIRM RECEIVING IT IS DEEMED, BY RECEIVING IT, TO AGREE THAT IT, AND/OR ANY PART OF IT, SHALL NOT BE DISCLOSED TO ANY PERSON, CORPORATION OR OTHER ENTITY, DUPLICATED, AND/OR USED, EXCEPT AS EXPRESSLY APPROVED IN WRITING IN ADVANCE BY OWNER. THIS DOCUMENT SHALL BE RETURNED TO OWNER UPON REQUEST. IT MAY BE SUBJECT TO CERTAIN RESTRICTIONS UNDER APPLICABLE EXPORT CONTROL LAWS AND REGULATIONS.

Project: (4X270 MW) BHADRADRI THERMAL POWER PROJECT
Customer: TELANGANA STATE POWER GENERATION CORPORATION LIMITED
Principle Consultant:DESEIN PVT. LTD.
Main Contractor: Bharat Heavy Electricals Ltd. Sub Contractor:

S. No.	Description		Data to be filled by successful bidder
A.	**General**		
1	Manufacturer & country of origin		Manufacturer-LHPL , Country of origin-INDIA
2	Motor type		Induction Motor
3	Type of starting		DOL
4	Name of the equipment driven by motor & Quantity		Axial Flow Fan ,As per Project requirement
5	Maximum Power requirement of driven equipment		0.55kW
6	Rated speed of Driven Equipment		935 RPM
7	Design ambient temperature		50°C
B.	**Design and Performance Data**		
1	Frame size & type designation		80 – Flameproof Motor
2	Type of duty		S1
3	Rated Voltage		415
4	Permissible variation for		
5	a	Voltage	±10%
6	b	Frequency	+3% to -5%
7	c)	Combined voltage & frequency	± 10 %
8	Rated output at design ambient temp (by resistance method)		0.55kW
9	Synchronous speed & Rated slip		1000RPM & 6.5%
10	Minimum permissible starting voltage		85%
11	Starting time in sec with mechanism coupled		5 SEC 8 SEC
12	a)At rated voltage		
13	b)At min starting voltage		
14	Locked rotor current as percentage of FLC(including IS tolerance)		600%
15	Torque		
	a)Starting		195%
	b)Maximum		250%
16	Permissible temp rise at rated output over ambient temp & method		70 Deg by resistance Method
17	Noise level at 1.0m (dB		AS PER I.S.-12065
18	Amplitude of vibration		AS PER I.S.-12075
19	Efficiency & P.F.at rated voltage & frequency		
	a)At 100% load		75.9% & 0.67
	c)At 75% load		74.8% & 0.60

NAME OF VENDOR			SEAL	REV.	
Laxmi Hydraulics Pvt..Ltd.		04/09/2018			
NAME	SIGNATURE	DATE		R0	

S. No.	Description	Data to be filled by successful bidder
	c)At starting	0.4
C.	**Constructional Features**	
1	Method of connection of motor driven equipment	Connection with Direct Drive--Axial Fan
2	Applicable Standard	IS/IEC 60034-1
3	DOP of Enclosure	IP-55
4	Method of cooling	IC4A1A1
5	Class of insulation	Class F with Temp. rise limited to Class B R2
6	Main terminal box	
	a)Type	REFER GAD
	b)Power Cable details (Conductor , size , armour / unarmour)	3C-2.5Sqmm Cu Armoured R2
	c)Cable Gland & lugs details (Size , type & material)	DCCG & REFER GAD
	d)Permissible Fault level (kA rms & duration in sec)	50kA for 0.25Sec
7	Space heater details (Voltage & watts)	Not Applicable
8	Flame proof motor details (if applicable)	NA
	a)Enclosure	IP:55
	b)suitability for hazardous area	
	i Zone	~~0~~ / ~~I~~ / II
	ii Group	IIA & IIB / ~~IIC~~
9	No. of Stator winding	One
10	Winding connection	Star
11	Kind of rotor winding	Squirrel Cage
12	Kind of bearings	DGBB
13	Direction of rotation when viewed from NDE	Bi-directional
14	Paint Shade & type	RAL 5012
15	Net weight of motor	22 KG APPROX
16	Outline mounting drawing No (To be enclosed as annexure)	Enclosed
D.	**Characteristic curves / drawings** (To be enclosed for motors of rating 0.55kW)	
	a)Torque speed characteristic	Enclosed
	b)Thermal withstand characteristic	Enclosed
	c)Current vs time	Enclosed
	d)Speed vs time	Enclosed

NAME OF VENDOR			SEAL	REV.	
Laxmi Hydraulics Pvt..Ltd.		04/09/2018			
NAME	SIGNATURE	DATE		R0	

MKTG Ref No.: D6PP18090	LAXMI HYDRAULICS PVT LTD. , B-11- MIDC CHINCHOLI , SOLAPUR.	LHP MOTORS DRIVES Driven by Commitment

SPEED Vs TORQUE & CURRENT CHARACTERISTICS

CUSTOMER : TELANGANA STATE POWER GENERATION CORP. LTD.

W.O. NO.: D6PP1809005 SAP NO: - IE-3

kW : 0.55 POLE : 6 VOLTS : 415 QTY : 9

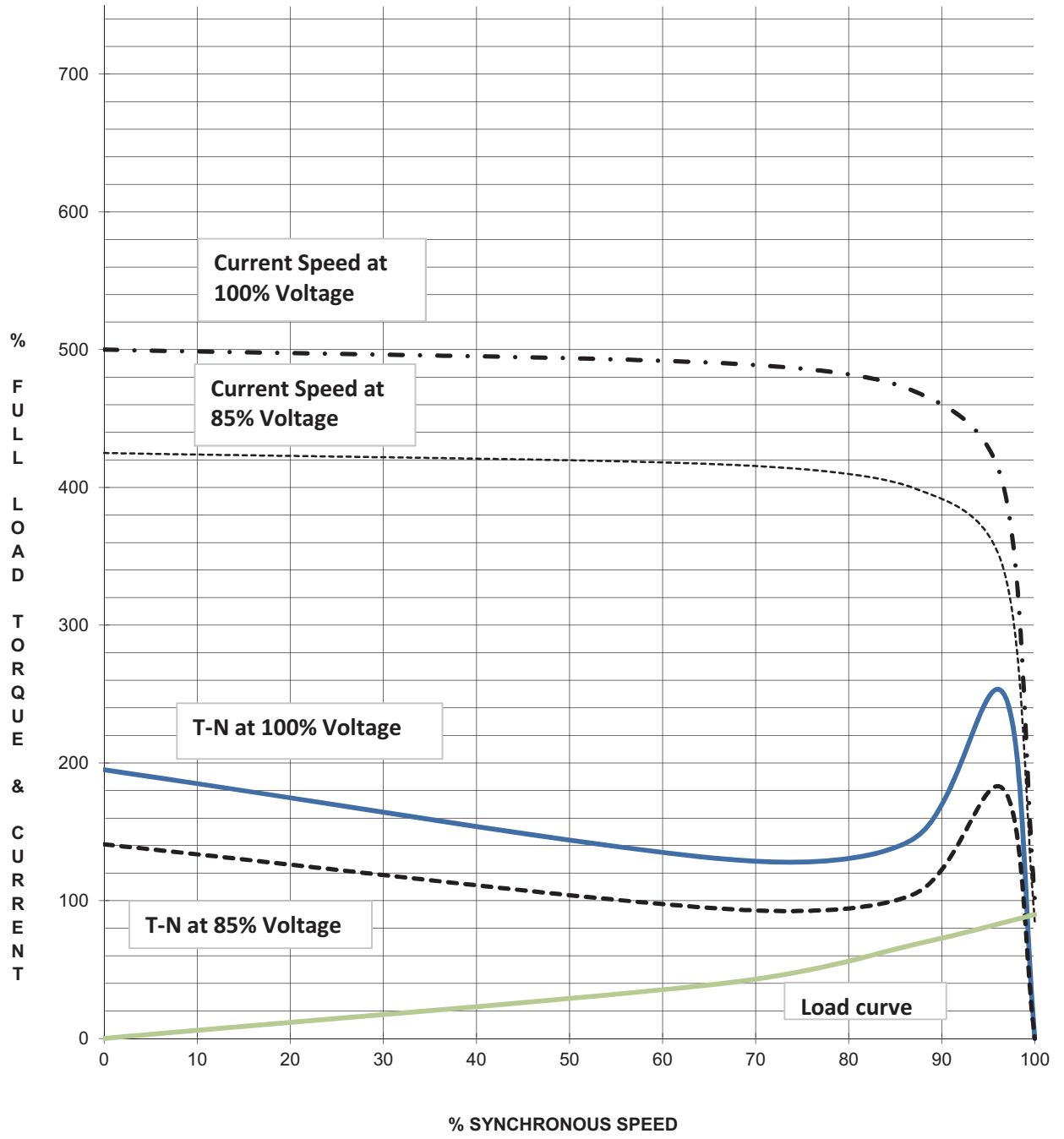

NO	REVISION	SIGN		SIGN	DATE
2			PREP	JMK	17-11-18
1			APPD	RN	17-11-18

MKTG Ref No.: D6PP1809005	LAXMI HYDRAULICS PVT LTD. , B-11- MIDC CHINCHOLI , SOLAPUR.	LHP MOTORS DRIVES Driven by Commitment

LOAD Vs EFF., P.F.,

CUSTOMER : TELANGANA STATE POWER GENERATION CORP. LTD.

W.O. NO. D8JP1804067 SAP NO: -

IE-3

kW : 0.55 POLE : 6 VOLTS : 415 QTY : 9

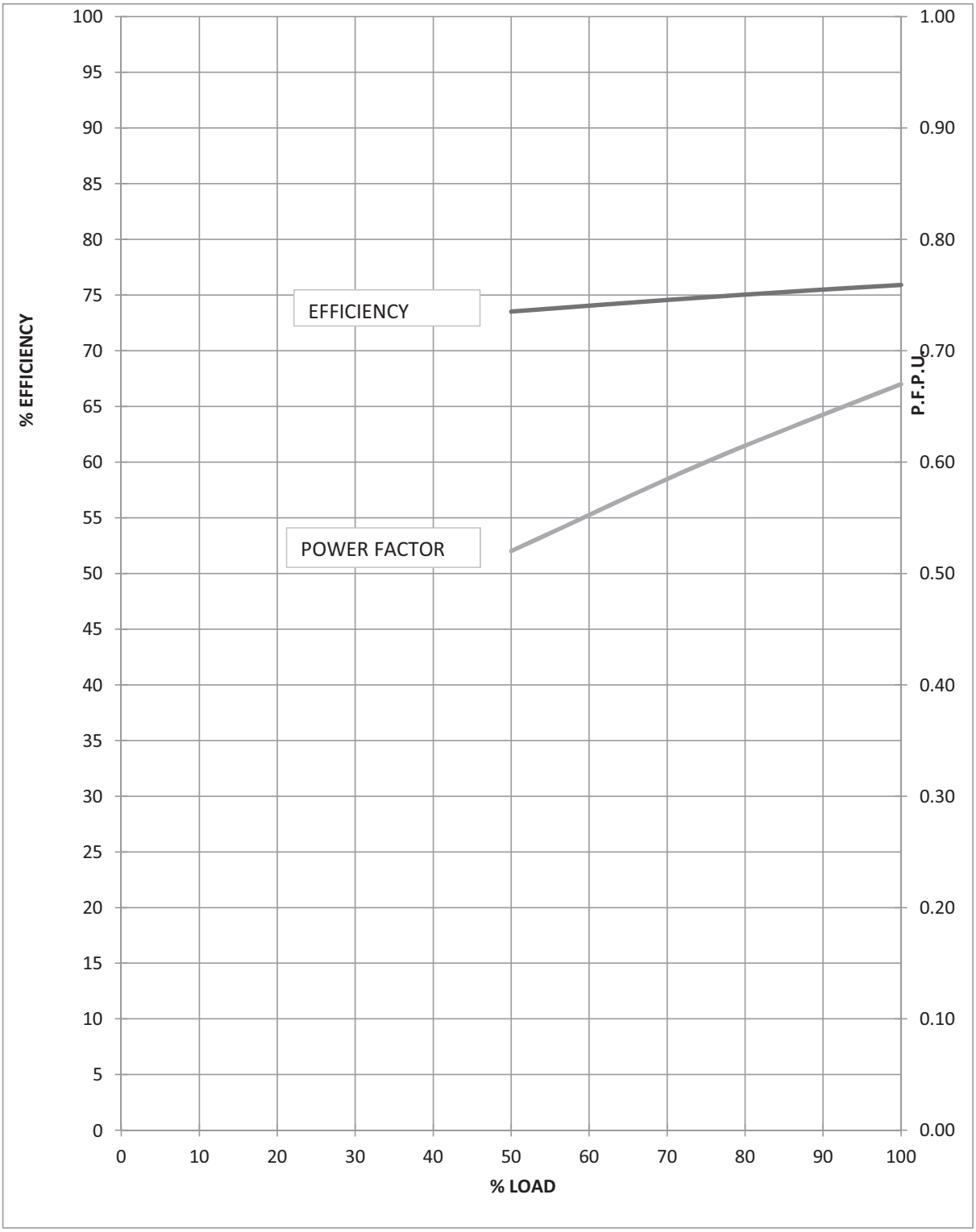

NO	REVISION	SIGN			DATE
2			PREP	JMK	17-11-18
1			APPD	RN	17-11-18

MKTG Ref No.:	D6PP1809005	LAXMI HYDRAULICS PVT LTD. , B-11- MIDC CHINCHOLI , SOLAPUR.	

STARTING CURRENT VS STARTING TIME AND THERMAL WITHSTAND TIME.

CUSTOMER			: TELANGANA STATE POWER GENERATION CORP. LTD.		
W.O. NO. :	D6PP1809005		SAP NO:	-	IE-3
kW :	0.55	POLE : 6	VOLTS :	415	QTY : 9

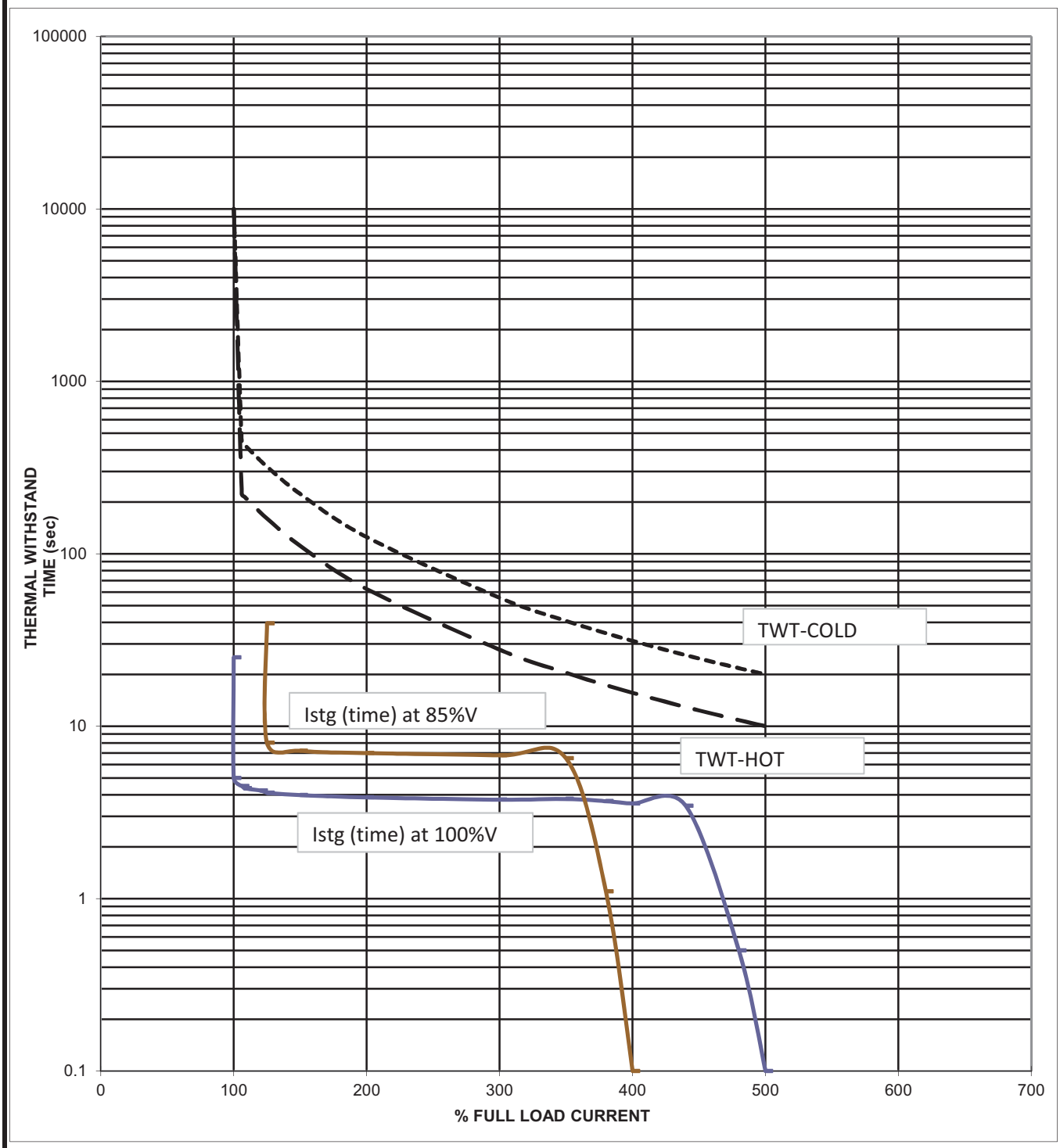

L. R.CURRENT at 100% voltage :	500	% OF FLA	THERMAL WITHSTAND TIME(sec):	
Starting time at 100% voltage=	5	sec	AT100% RATED VOLTAGE (HOT)	10
Starting time at 85% voltage=	8	sec	AT100% RATED VOLTAGE (COLD)	20

NO	REVISION	SIGN			SIGN	DATE
2				PREP	JMK	17-11-18
1				APPD	RN	17-11-18

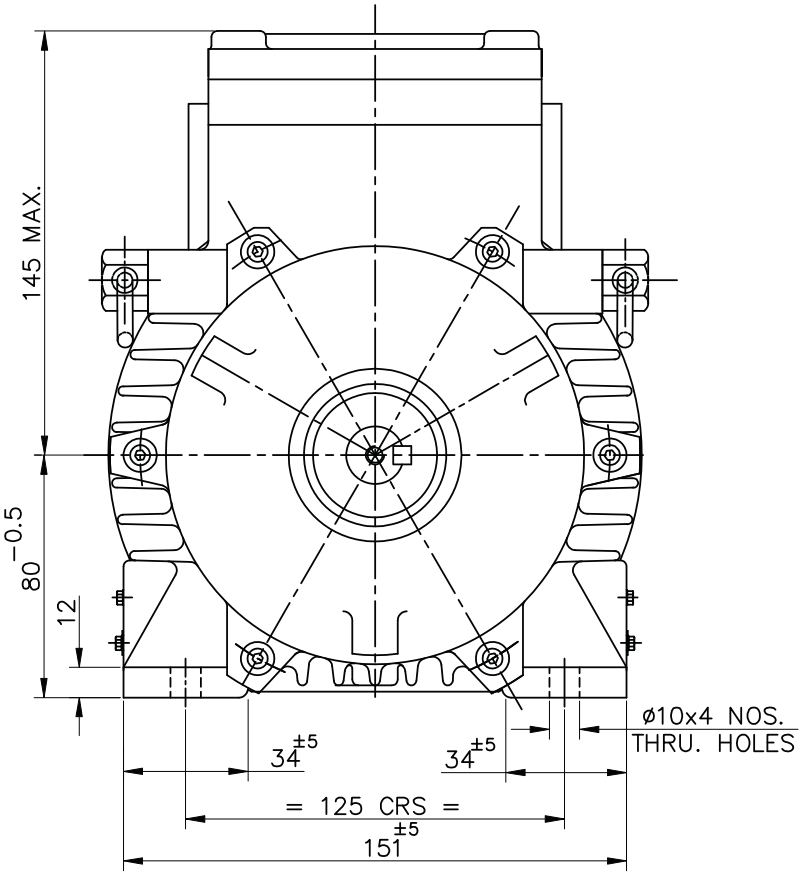

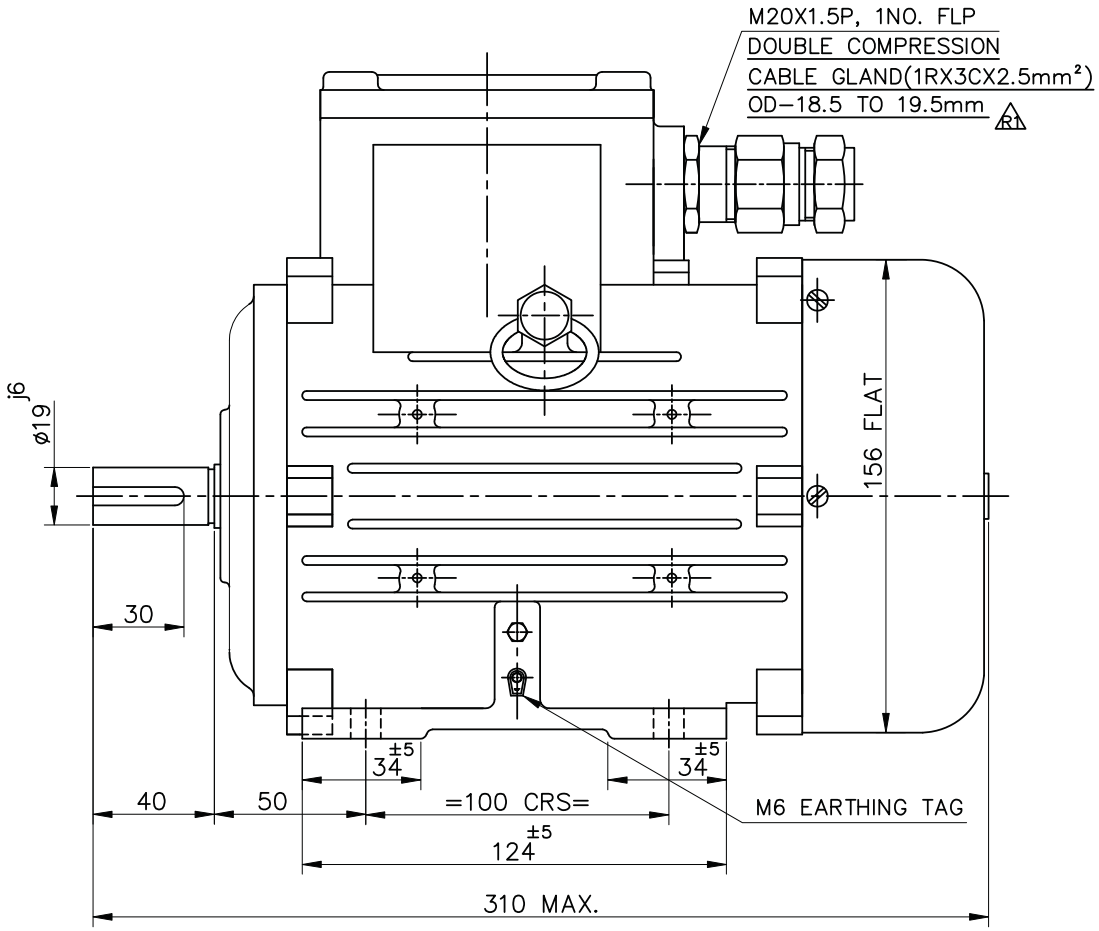

SPECIFICATION:-

RATING KW/HP	0.55/0.75
POLE	6
BEARING DE	6204 ZZ
BEARING NDE	6204 ZZ

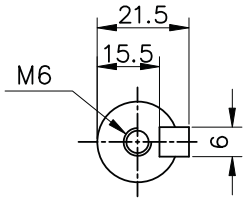

SHAFT END DETAILS

MATERIAL OF CONSTRUCTION:-

FRAME	CAST IRON
END COVER (DE)	CAST IRON
END COVER (NDE)	CAST IRON
T. BOX COVER	CAST IRON
SHAFT	CARBON STEEL

REV. NO.	DETAIL OF CHANGE	DATE.	INTL.
1	DCCG DETAILS ADDED.	15.11.18	NVM

UNMENTIONED TOLERANCES ARE AS PER IS:2102-1/ ISO 2768-1

LINEAR DIMNS.	OVER & UPTO	0.5-3	3-6	6-30	30-120	120-400	400-1000	1000-2000
	TOLERANCE	±0.2	±0.3	±0.5	±0.8	±1.2	±2	±3

ANGULAR DIMNS.	PERMISSIBLE DEVIATIONS FOR LENGTHS OF THE SHORTER SIDE OF THE ANGLE.					
	OVER & UPTO	0-10	10-50	50-120	120-400	400.....
	TOLERANCE	±1°	±0°30'	±0°20'	±0°10'	±0°5'

	NAME.	DATE.
DGN.		
DRN.	NVM	08.09.18
CHD.		08.09.18
APPD.		08.09.18

TITLE GENERAL ARRANGEMENT DRG. FOR LF 80 FRAME FOOT MOUNTED FLP MOTOR FOR GAS GROUP - IIA/IIB (IE3)

SCALE :--1:1

SHEET:- 01 OF 02

Laxmi Hydraulics Pvt.Ltd. SOLAPUR

Website : www.lhp.co.in

UNLESS OTHERWISE SPECIFIED ALL DIMNS. ARE IN MM. DO NOT SCALE THE DRAWING.

DRG. NO. MGAF080A0086

ISSUE NO. 01 REV.NO. 01

\\Ppk\d\LHPL DRAWING FILES\DRGS 3\G.A.DWG\MGAF\080\B3\MGAF080A0086.dwg

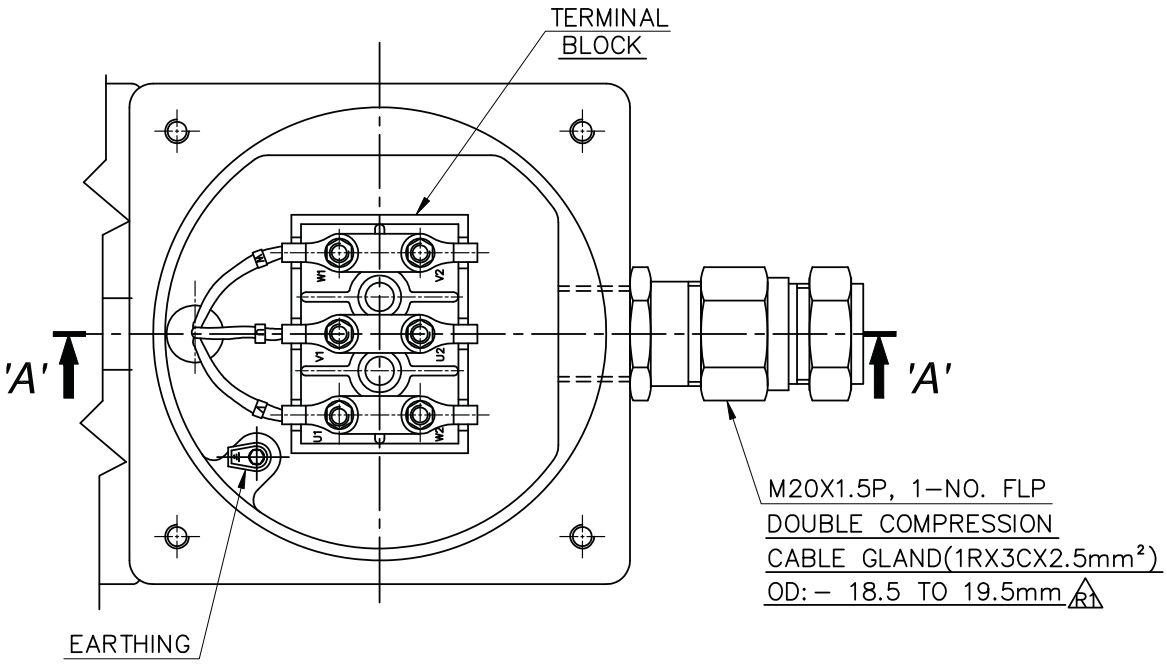

TOP VIEW WITHOUT COVER

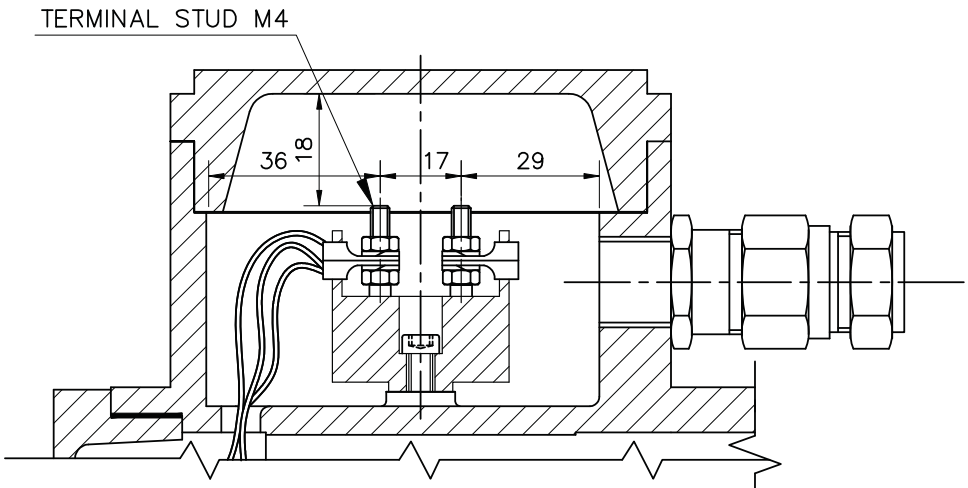

SECTION A-A

REV. NO.	DETAIL OF CHANGE	DATE.	INTL.
1	DCCG DETAILS ADDED.	15.11.18	NVM

DRG. REVIEW POINTS

Standardisation	
Gemometrical Reqmnts.	
Surface Finish	
Sectional Views/ Arrows.	
Material Grade	
Process. Reqmnts.	
Gauging Reqmnts.	
Drg.No./ Rev.No./ Issue No.	
Signeture	

UNMENTIONED TOLERANCES ARE AS PER IS:2102-1/ ISO 2768-1

LINEAR DIMNS.	OVER & UPTO	0.5-3	3-6	6-30	30-120	120-400	400-1000	1000-2000
	TOLERANCE	±0.2	±0.3	±0.5	±0.8	±1.2	±2	±3

ANGULAR DIMNS. — PERMISSIBLE DEVIATIONS FOR LENGTHS OF THE SHORTER SIDE OF THE ANGLE.

OVER & UPTO	0-10	10-50	50-120	120-400	400.....
TOLERANCE	±1°	±0°30'	±0°20'	±0°10'	±0°5'

TITLE

TERMINAL BOX ARRANGEMENT DRG. FOR LF 80 FRAME FOOT MOUNTED FLP MOTOR FOR GAS GROUP - IIA/IIB (IE3)

	NAME.	DATE.
DGN.		
DRN.	NVM	08.09.18
CHD.		08.09.18
APPD.		08.09.18

SCALE :--1:1

SHEET:- 02 OF 02

Laxmi Hydraulics Pvt.Ltd.
Website : www.lhp.co.in
SOLAPUR

UNLESS OTHERWISE SPECIFIED ALL DIMNS. ARE IN MM. DO NOT SCALE THE DRAWING.

DRG. NO. MGAF080A0086

ISSUE NO. 01 REV.NO. 01

\\Ppk\d\LHPL DRAWING FILES\DRGS 3\G.A.DWG\MGAF\080\B3\MGAF080A0086.dwg

S. No.	Description	Data to be filled by successful bidder
A.	**General**	
1	Manufacturer & country of origin	Manufacturer-LHPL , Country of origin-INDIA
2	Motor type	Induction Motor
3	Type of starting	DOL
4	Name of the equipment driven by motor & Quantity	Axial Flow Fan , As per Project requirement
5	Maximum Power requirement of driven equipment	0.75kW
6	Rated speed of Driven Equipment	935 RPM
7	Design ambient temperature	50°C
B.	**Design and Performance Data**	
1	Frame size & type designation	90L –Flameproof Motor
2	Type of duty	S1
3	Rated Voltage	415
4	Permissible variation for	
5	a Voltage	±10%
6	b Frequency	+3% to -5%
7	c) Combined voltage & frequency	± 10 %
8	Rated output at design ambient temp (by resistance method)	0.75kW
9	Synchronous speed & Rated slip	1000RPM & 6.5%
10	Minimum permissible starting voltage	85%
11	Starting time in sec with mechanism coupled	4 SEC 6 SEC
12	a)At rated voltage	
13	b)At min starting voltage	
14	Locked rotor current as percentage of FLC(including IS tolerance)	600%
15	Torque	
	a)Starting	195%
	b)Maximum	250%
16	Permissible temp rise at rated output over ambient temp & method	70 Deg by resistance Method
17	Noise level at 1.0m (dB	AS PER I.S.-12065
18	Amplitude of vibration	AS PER I.S.-12075
19	Efficiency & P.F.at rated voltage & frequency	
	a)At 100% load	78.9% & 0.67
	c)At 75% load	78.0% & 0.60

NAME OF VENDOR			SEAL	REV.	
Laxmi Hydraulics Pvt..Ltd.		04/09/2018			
NAME	SIGNATURE	DATE		R0	

S. No.	Description	Data to be filled by successful bidder
	c)At starting	0.39
C.	**Constructional Features**	
1	Method of connection of motor driven equipment	Connection with Direct Drive--Axial Fan
2	Applicable Standard	IS/IEC 60034-1
3	DOP of Enclosure	IP-55
4	Method of cooling	IC4A1A1
5	Class of insulation	Class F with Temp. rise limited to Class B R2
6	Main terminal box	
	a)Type	REFER GAD
	b)Power Cable details (Conductor , size , armour / unarmour)	3C-2.5Sqmm Cu Armoured R2
	c)Cable Gland & lugs details (Size , type & material)	DCCG & REFER GAD
	d)Permissible Fault level (kA rms & duration in sec)	50kA for 0.25Sec
7	Space heater details (Voltage & watts)	Not Applicable
8	Flame proof motor details (if applicable)	Not Applicable
	a)Enclosure	IP:55
	b)suitability for hazardous area	
	i Zone	~~I / I~~ / II --
	ii Group	IIA & IIB / ~~IIC~~ --
9	No. of Stator winding	One
10	Winding connection	Star
11	Kind of rotor winding	Squirrel Cage
12	Kind of bearings	DGBB
13	Direction of rotation when viewed from NDE	Bi-directional
14	Paint Shade & type	RAL 5012
15	Net weight of motor	50 KG APPROX
16	Outline mounting drawing No (To be enclosed as annexure)	Enclosed
D.	**Characteristic curves / drawings** (To be enclosed for motors of rating 0.75kW)	
	a)Torque speed characteristic	Enclosed
	b)Thermal withstand characteristic	Enclosed
	c)Current vs time	Enclosed
	d)Speed vs time	Enclosed

NAME OF VENDOR			SEAL	REV.	
Laxmi Hydraulics Pvt..Ltd.		04/09/2018			
NAME	SIGNATURE	DATE		R0	

MKTG Ref No.: D6PP18090	LAXMI HYDRAULICS PVT LTD. , B-11- MIDC CHINCHOLI , SOLAPUR.	LHP MOTORS DRIVES Driven by Commitment

SPEED Vs TORQUE & CURRENT CHARACTERISTICS

CUSTOMER : TELANGANA STATE POWER GENERATION CORP. LTD.

W.O. NO.: D6PP1809005 SAP NO: - IE-3

kW : 0.75 POLE : 6 VOLTS : 415 QTY : 2

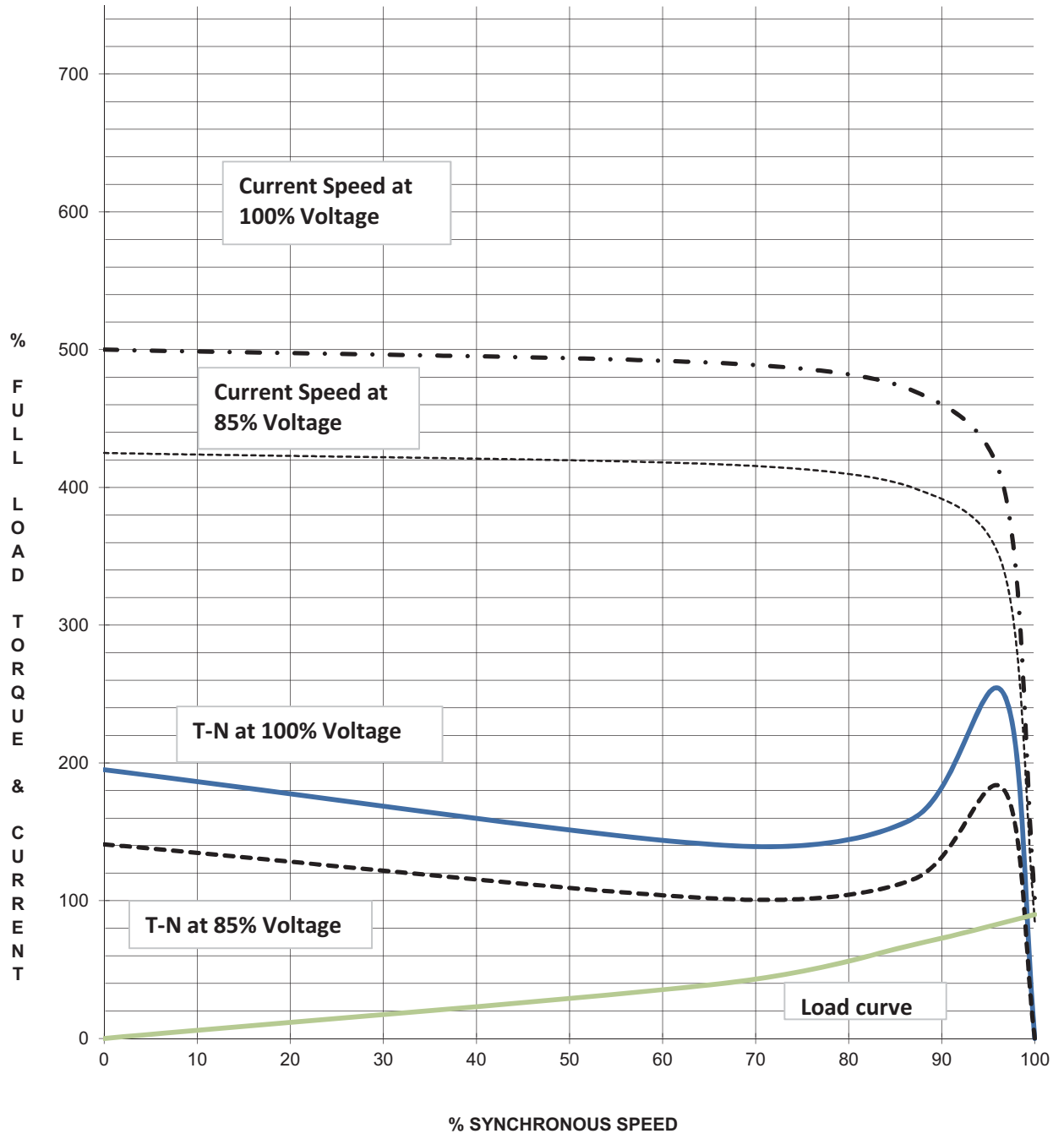

NO	REVISION	SIGN		SIGN	DATE
2			PREP	JMK	17-11-18
1			APPD	RN	17-11-18

MKTG Ref No.: D6PP1809005	LAXMI HYDRAULICS PVT LTD. , B-11- MIDC CHINCHOLI , SOLAPUR.	LHP MOTORS DRIVES Driven by Commitment

LOAD Vs EFF., P.F.,

CUSTOMER : TELANGANA STATE POWER GENERATION CORP. LTD.

W.O. NO. D6PP1809005 SAP NO: -

IE-3

kW : 0.75 POLE : 6 VOLTS : 415 QTY : 2

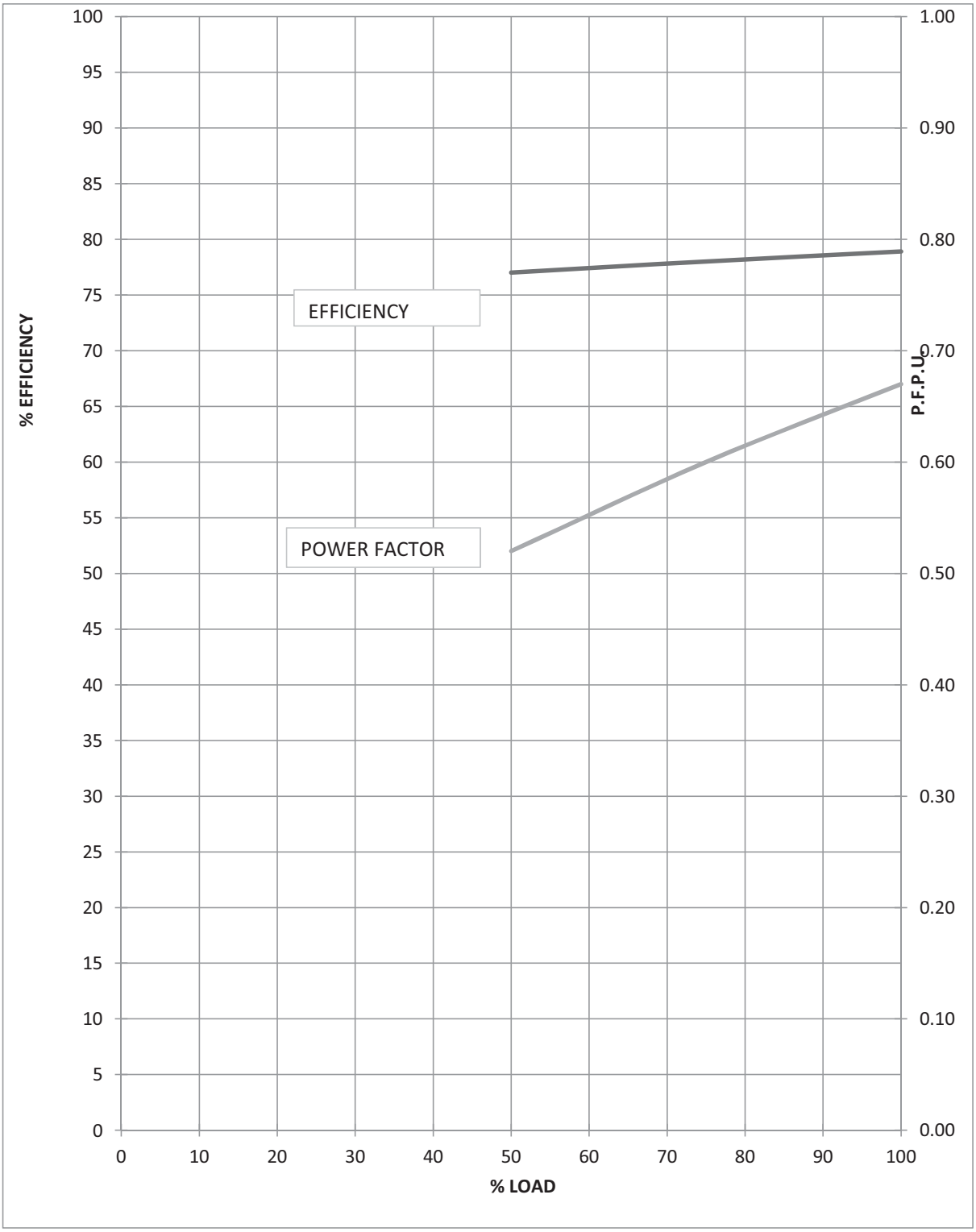

NO	REVISION	SIGN			DATE
2			PREP	JMK	17-11-18
1			APPD	RN	17-11-18

MKTG Ref No.:	D6PP1809005	LAXMI HYDRAULICS PVT LTD. , B-11- MIDC CHINCHOLI , SOLAPUR.	

STARTING CURRENT VS STARTING TIME AND THERMAL WITHSTAND TIME.

CUSTOMER			: TELANGANA STATE POWER GENERATION CORP. LTD.		
W.O. NO. :	D6PP1809005		SAP NO:	-	IE-3
kW :	0.75	POLE : 6	VOLTS :	415	QTY : 2

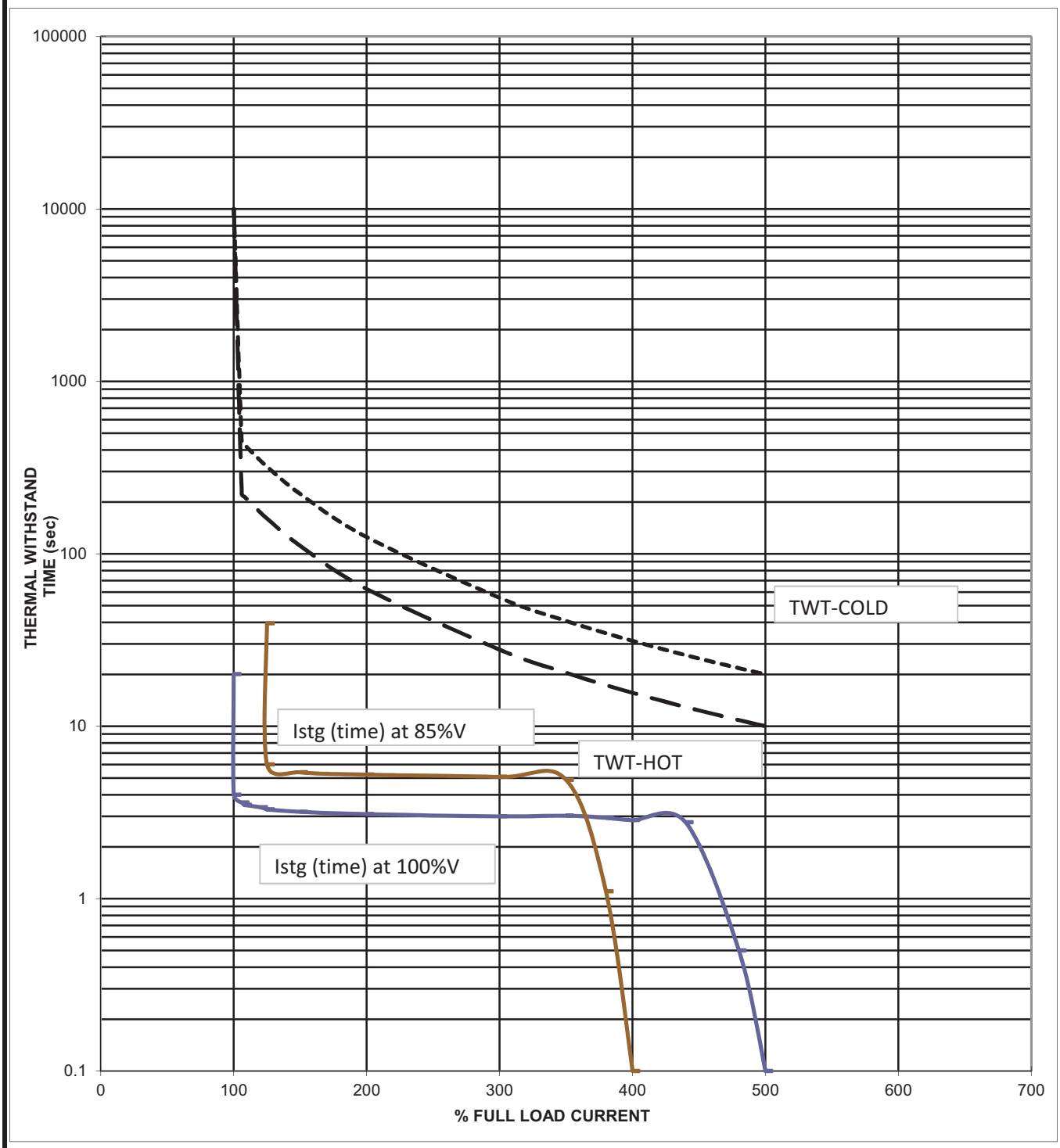

L. R.CURRENT at 100% voltage :	500	% OF FLA	THERMAL WITHSTAND TIME(sec):	
Starting time at 100% voltage=	4	sec	AT100% RATED VOLTAGE (HOT)	10
Starting time at 85% voltage=	6	sec	AT100% RATED VOLTAGE (COLD)	20

NO	REVISION	SIGN			SIGN	DATE
2				PREP	JMK	17-11-18
1				APPD	RN	17-11-18

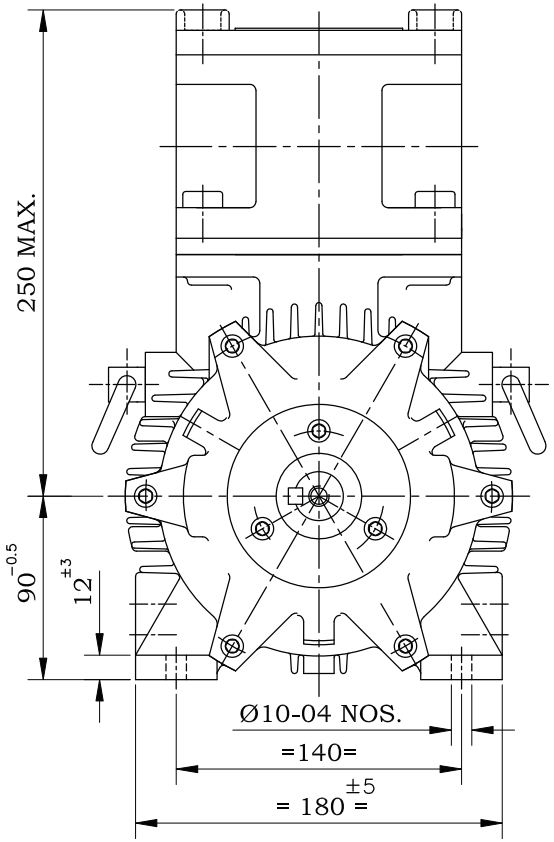

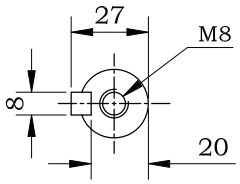

SHAFT END DETAILS

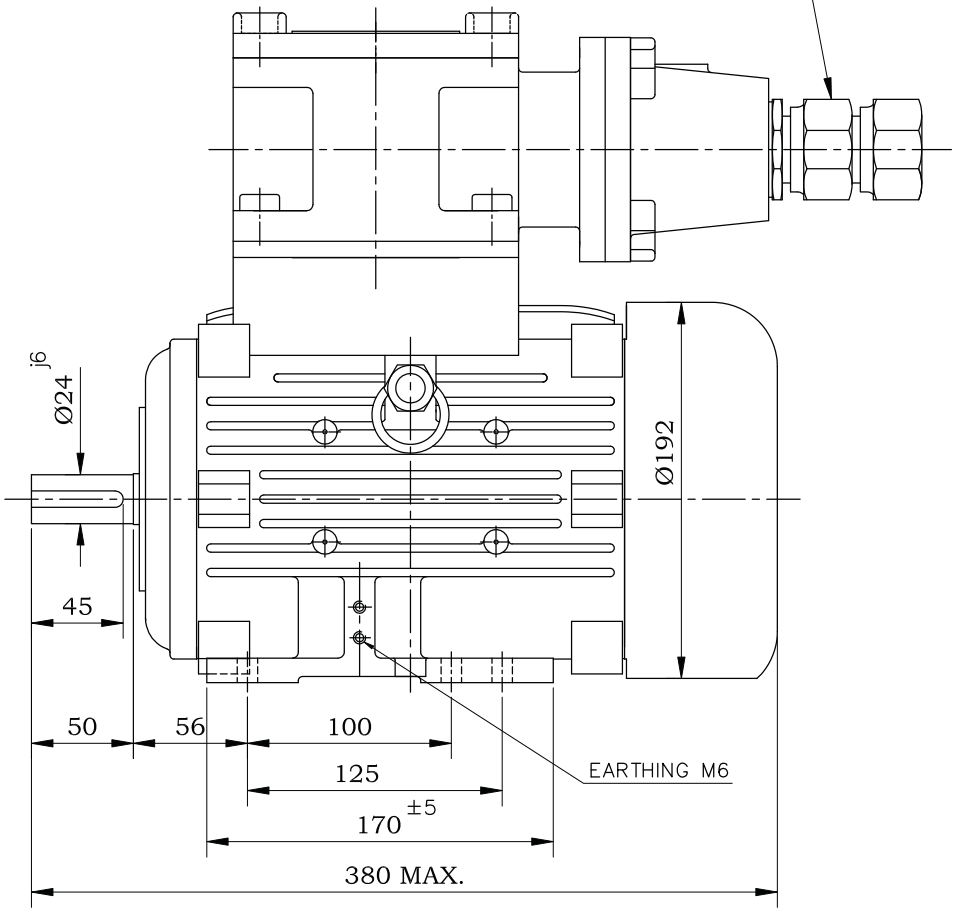

SPECIFICATION:-

RATING	1.1KW/1.5HP	1.1KW/1.5HP
POLE	6 POLE	6 POLE
BEARING DE	6205 2Z	6205 2Z
BEARING NDE	6205 2Z	6205 2Z

MATERIAL OF CONSTRUCTION:-

FRAME	CAST IRON
END COVER (DE)	CAST IRON
END COVER (NDE)	CAST IRON
T. BOX COVER	CAST IRON
SHAFT	CARBON STEEL

REV. NO.	ECN DETAILS	DATE.	INTL.
1	---	---	---

UNMENTIONED TOLERANCES ARE AS PER IS:2102-1/ ISO 2768-1								
LINEAR DIMNS.	OVER & UPTO	0.5-3	3-6	6-30	30-120	120-400	400-1000	1000-2000
	TOLERANCE	±0.2	±0.3	±0.5	±0.8	±1.2	±2	±3
ANGULAR DIMNS.	PERMISSIBLE DEVIATIONS FOR LENGTHS OF THE SHORTER SIDE OF THE ANGLE.							
	OVER & UPTO	0-10	10-50	50-120	120-400	400.....		
	TOLERANCE	±1°	±0°30'	±0°20'	±0°10'	±0°5'		

	NAME.	DATE.
DGN.		
DRN.	POTDAR	08.09.18
CHD.		08.09.18
APPD.	GRM	08.09.18

SCALE :--1:1

SHEET:- 1 OF 2

TITLE:- GENERAL ARRANGEMENT DRG OF LF-90S/L FOOT (B-3) MOUNTING GAS.GROUP- IIA,IIB

Laxmi Hydraulics Pvt.Ltd. SOLAPUR

Website : www.lhp.co.in

UNLESS OTHERWISE SPECIFIED ALL DIMNS. ARE IN MM. DO NOT SCALE THE DRAWING.

DRG. NO. MGAF090A0123

ISSUE NO. 01 REV.NO. 00

\\ppk\D\LHPL DRAWING FILES\DRGS 3\G.A.DWG\MGAF\090\B3\MGAF090A0123.dwg

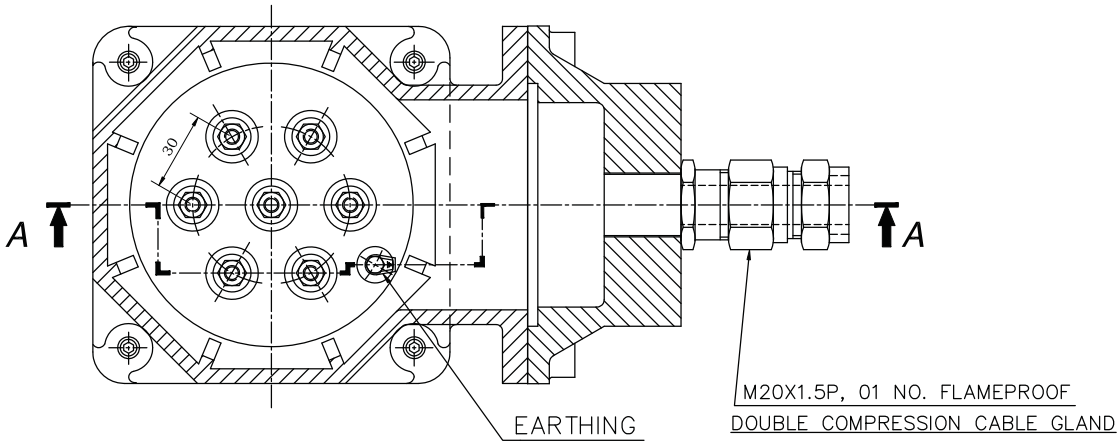

SECTION B-B

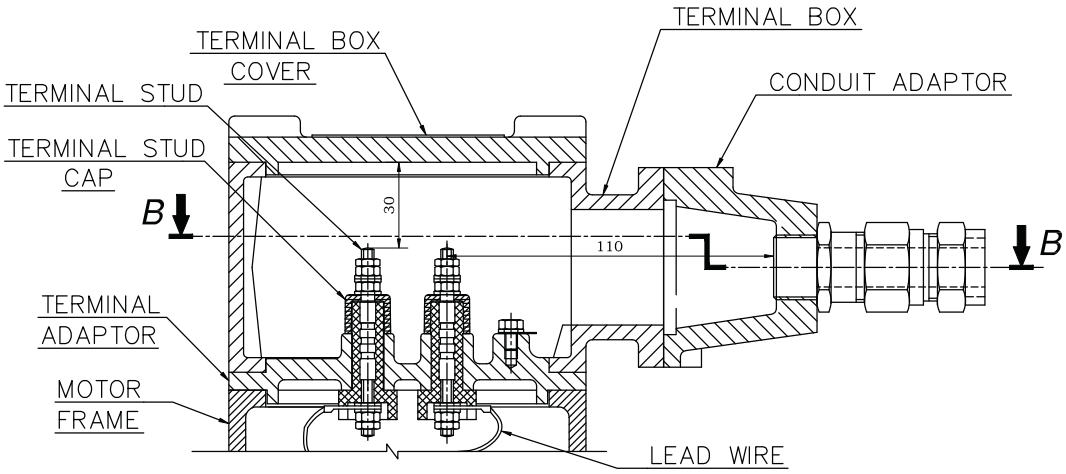

SECTION A-A

REV. NO.	DETAIL OF CHNAGE	DATE.	INTL.
1			

Standardisation	
Gemometrical Reqmnts.	
Surface Finish	
Sectional Views/ Arrows.	
Material Grade	
Process. Reqmnts.	
Gauging Reqmnts.	
Drg.No./ Rev.No./ Issue No.	
Signeture	

UNMENTIONED TOLERANCES ARE AS PER IS:2102-1/ ISO 2768-1

LINEAR DIMNS.	OVER & UPTO	0.5-3	3-6	6-30	30-120	120-400	400-1000	1000-2000
	TOLERANCE	±0.2	±0.3	±0.5	±0.8	±1.2	±2	±3

ANGULAR DIMNS.	PERMISSIBLE DEVIATIONS FOR LENGTHS OF THE SHORTER SIDE OF THE ANGLE.				
OVER & UPTO	0-10	10-50	50-120	120-400	400.....
TOLERANCE	±1°	±0°30'	±0°20'	±0°10'	±0°5'

TITLE:- TERMINAL BOX ARRANGEMENT DRG OF LF-90S/L FOOT (B-3) MOUNTING GAS.GROUP- IIA,IIB

	NAME.	DATE.
DGN.		
DRN.	POTDAR	08.09.18
CHD.		08.09.18
APPD.	GRM	08.09.18

SCALE :--1:1

SHEET:- 2 OF 2

Laxmi Hydraulics Pvt.Ltd. SOLAPUR

Website : www.lhp.co.in

UNLESS OTHERWISE SPECIFIED ALL DIMNS. ARE IN MM. DO NOT SCALE THE DRAWING.

DRG. NO. MGAF090A0123

ISSUE NO. 01 REV.NO. 00

\\ppk\D\LHPL DRAWING FILES\DRGS 3\G.A.DWG\MGAF\090\B3\MGAF090A0123.dwg

S. No.	Description		Data to be filled by successful bidder
A.	**General**		
1	Manufacturer & country of origin		Manufacturer-LHPL , Country of origin-INDIA
2	Motor type		Induction Motor
3	Type of starting		DOL
4	Name of the equipment driven by motor & Quantity		Axial Flow Fan , As per Project requirement
5	Maximum Power requirement of driven equipment		1.1kW
6	Rated speed of Driven Equipment		940 RPM
7	Design ambient temperature		50°C
B.	**Design and Performance Data**		
1	Frame size & type designation		90L –Flame proof motor
2	Type of duty		S1
3	Rated Voltage		415
4	Permissible variation for		
5	a	Voltage	±10%
6	b	Frequency	+3% to -5%
7	c)	Combined voltage & frequency	± 10 %
8	Rated output at design ambient temp (by resistance method)		1.1kW
9	Synchronous speed & Rated slip		1000RPM & 6.0%
10	Minimum permissible starting voltage		85%
11	Starting time in sec with mechanism coupled		3 SEC 4 SEC
12	a)At rated voltage		
13	b)At min starting voltage		
14	Locked rotor current as percentage of FLC(including IS tolerance)		600%
15	Torque		
	a)Starting		200%
	b)Maximum		260%
16	Permissible temp rise at rated output over ambient temp & method		70 Deg by resistance Method
17	Noise level at 1.0m (dB		AS PER I.S.-12065
18	Amplitude of vibration		AS PER I.S.-12075
19	Efficiency & P.F.at rated voltage & frequency		
	a)At 100% load		81.0% & 0.67
	c)At 75% load		79.8% & 0.66

NAME OF VENDOR			SEAL	REV.	
Laxmi Hydraulics Pvt..Ltd.		04/09/2018			
NAME	SIGNATURE	DATE		R0	

S. No.	Description	Data to be filled by successful bidder
	c)At starting	0.4
C.	**Constructional Features**	
1	Method of connection of motor driven equipment	Connection with Direct Drive--Axial Fan
2	Applicable Standard	IS/IEC 60034-1
3	DOP of Enclosure	IP-55
4	Method of cooling	IC4A1A1
5	Class of insulation	Class F with temp. rise limited to class B R2
6	Main terminal box	
	a)Type	IP55
	b)Power Cable details (Conductor , size , armour / unarmour)	3C-2.5Sqmm Cu Armoured R2
	c)Cable Gland & lugs details (Size , type & material)	AS PER GAD
	d)Permissible Fault level (kA rms & duration in sec)	50kA for 0.25Sec
7	Space heater details (Voltage & watts)	Not Applicable
8	Flame proof motor details (if applicable)	
	a)Enclosure	AS PER GAD
	b)suitability for hazardous area	
	i Zone	~~0~~ / ~~I~~ / II
	ii Group	IIA & IIB / ~~IIC~~
9	No. of Stator winding	One
10	Winding connection	Star
11	Kind of rotor winding	Squirrel Cage
12	Kind of bearings	DGBB
13	Direction of rotation when viewed from NDE	Bi-directional
14	Paint Shade & type	RAL 5012
15	Net weight of motor	53 KG APROX
16	Outline mounting drawing No (To be enclosed as annexure)	Enclosed
D.	**Characteristic curves / drawings** (To be enclosed for motors of rating 1.1kW)	
	a)Torque speed characteristic	Enclosed
	b)Thermal withstand characteristic	Enclosed
	c)Current vs time	Enclosed
	d)Speed vs time	Enclosed

NAME OF VENDOR			SEAL	REV.	
Laxmi Hydraulics Pvt..Ltd.		04/09/2018			
NAME	SIGNATURE	DATE		R0	

MKTG Ref No.: D6PP18090	LAXMI HYDRAULICS PVT LTD. , B-11- MIDC CHINCHOLI , SOLAPUR.	LHP MOTORS DRIVES Driven by Commitment

SPEED Vs TORQUE & CURRENT CHARACTERISTICS

CUSTOMER : TELANGANA STATE POWER GENERATION CORP. LTD.

W.O. NO.: D6PP1809005 SAP NO: - IE-3

kW : 1.1 POLE : 6 VOLTS : 415 QTY : 64

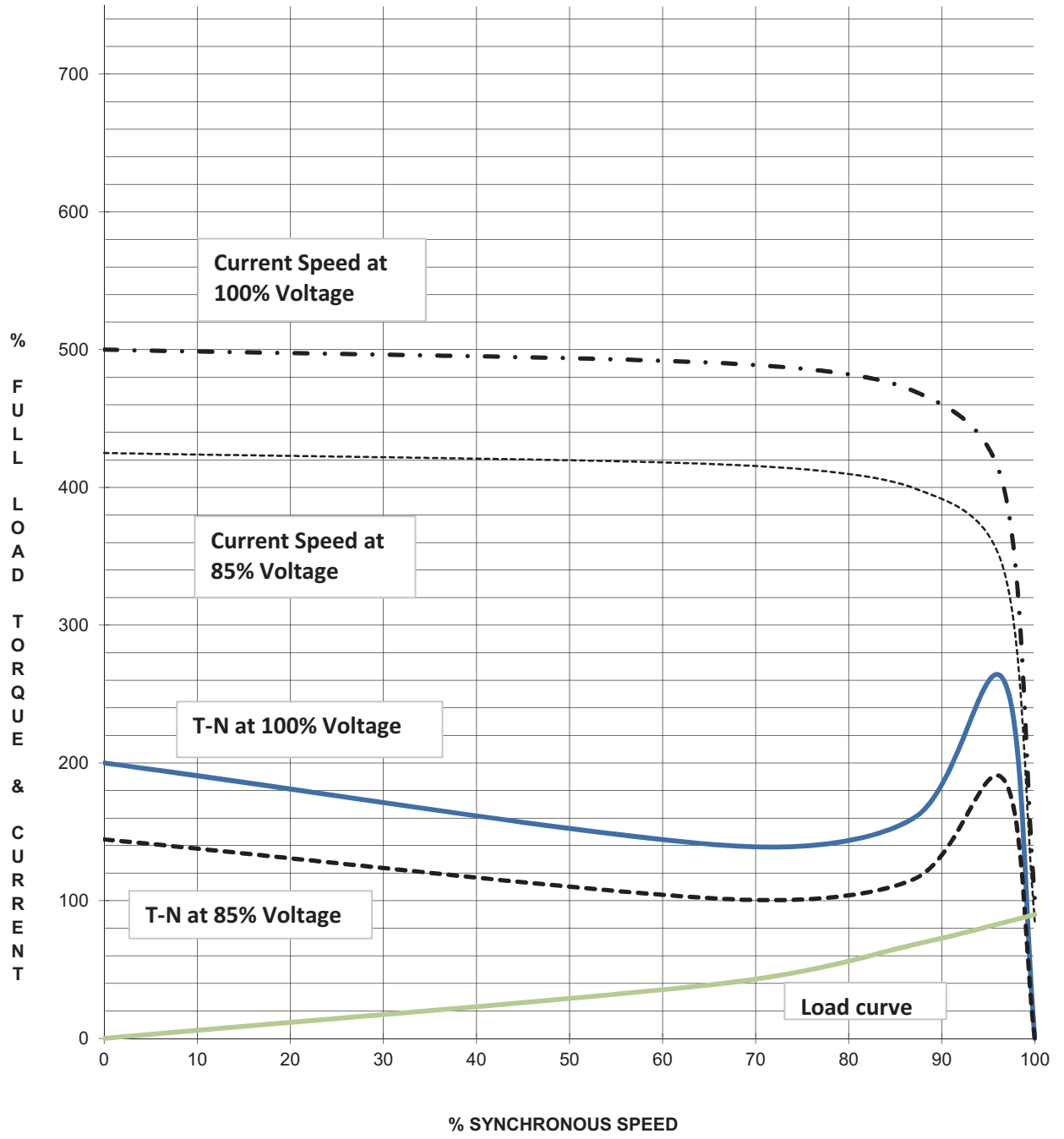

NO	REVISION	SIGN		SIGN	DATE
2			PREP	JMK	17-11-18
1			APPD	RN	17-11-18

MKTG Ref No.: D6PP1809005	LAXMI HYDRAULICS PVT LTD. , B-11- MIDC CHINCHOLI , SOLAPUR.	LHP MOTORS DRIVES Driven by Commitment

LOAD Vs EFF., P.F.,

CUSTOMER : TELANGANA STATE POWER GENERATION CORP. LTD.

W.O. NO. D6PP1809005 SAP NO: -

IE-3

kW : 1.1 POLE : 6 VOLTS : 415 QTY : 64

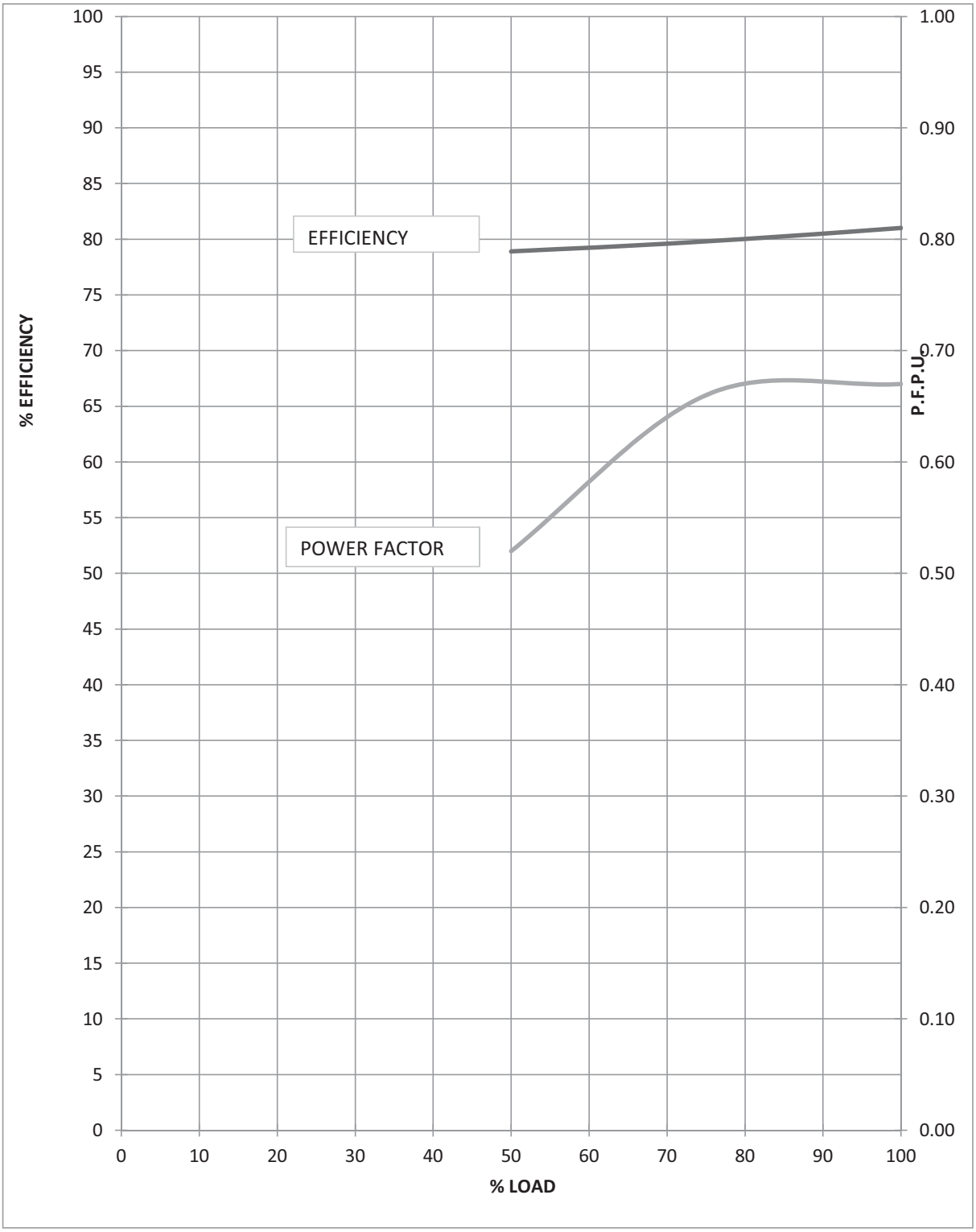

NO	REVISION	SIGN			DATE
2			PREP	JMK	17-11-18
1			APPD	RN	17-11-18

MKTG Ref No.:	D6PP1809005	LAXMI HYDRAULICS PVT LTD. , B-11- MIDC CHINCHOLI , SOLAPUR.	

STARTING CURRENT VS STARTING TIME AND THERMAL WITHSTAND TIME.

CUSTOMER			: TELANGANA STATE POWER GENERATION CORP. LTD.		
W.O. NO. :	D6PP1809005		SAP NO:	-	IE-3
kW :	1.1	POLE : 6	VOLTS :	415	QTY : 64

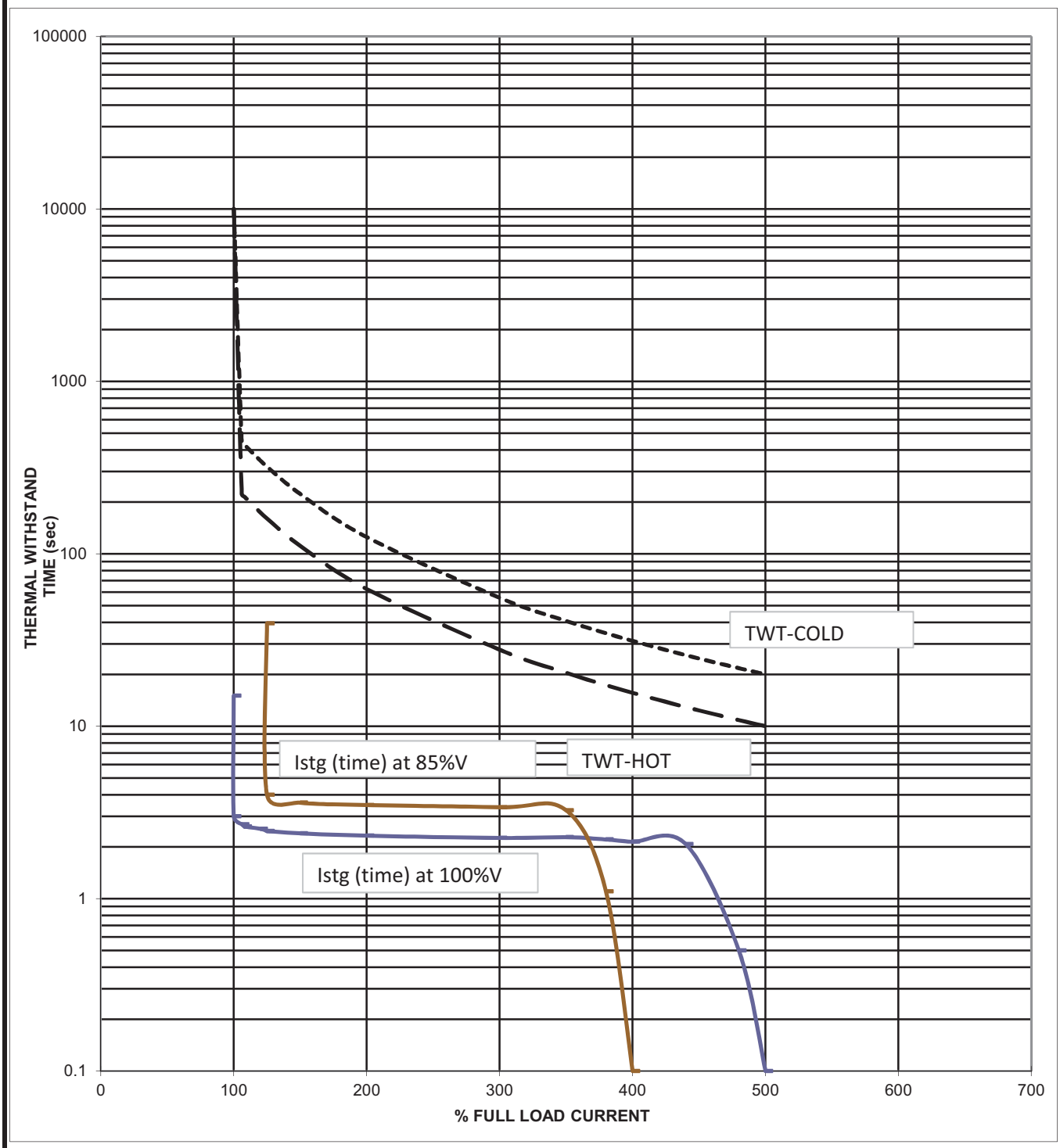

L. R.CURRENT at 100% voltage :	500	% OF FLA	THERMAL WITHSTAND TIME(sec):	
Starting time at 100% voltage=	3	sec	AT100% RATED VOLTAGE (HOT)	10
Starting time at 85% voltage=	4	sec	AT100% RATED VOLTAGE (COLD)	20

NO	REVISION	SIGN			SIGN	DATE
2				PREP	JMK	17-11-18
1				APPD	RN	17-11-18

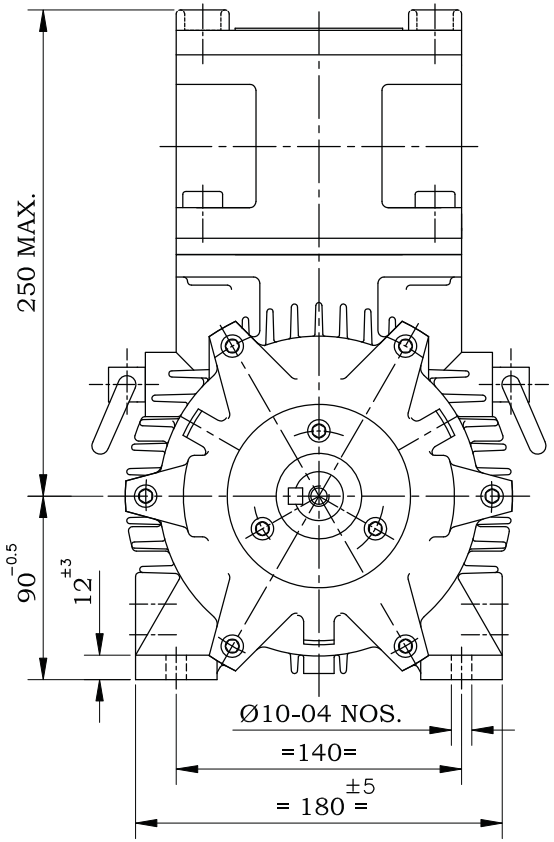

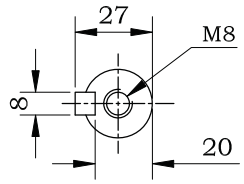

SHAFT END DETAILS

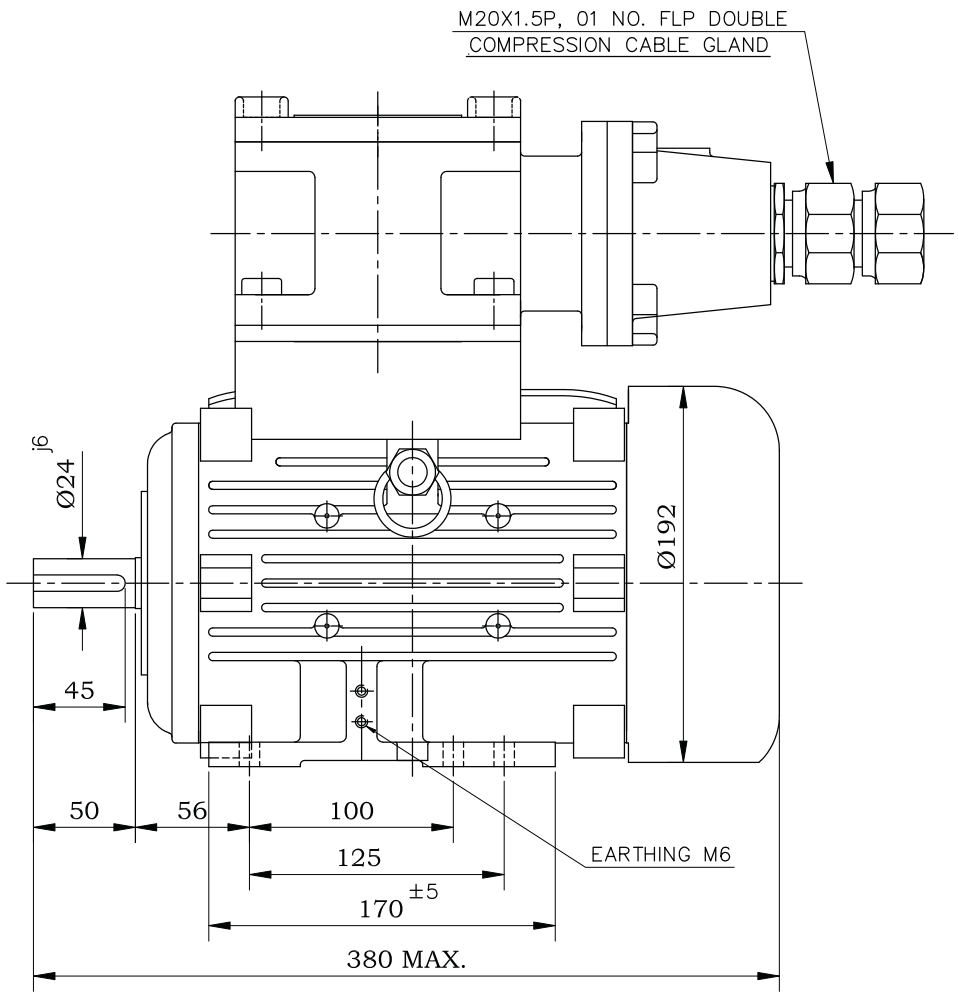

SPECIFICATION:-

RATING	1.1KW/1.5HP	1.1KW/1.5HP
POLE	6 POLE	6 POLE
BEARING DE	6205 2Z	6205 2Z
BEARING NDE	6205 2Z	6205 2Z

MATERIAL OF CONSTRUCTION:-

FRAME	CAST IRON
END COVER (DE)	CAST IRON
END COVER (NDE)	CAST IRON
T. BOX COVER	CAST IRON
SHAFT	CARBON STEEL

REV. NO.	ECN DETAILS	DATE.	INTL.
1	---	---	---

UNMENTIONED TOLERANCES ARE AS PER IS:2102-1/ ISO 2768-1								
LINEAR DIMNS.	OVER & UPTO	0.5-3	3-6	6-30	30-120	120-400	400-1000	1000-2000
	TOLERANCE	±0.2	±0.3	±0.5	±0.8	±1.2	±2	±3
ANGULAR DIMNS.	PERMISSIBLE DEVIATIONS FOR LENGTHS OF THE SHORTER SIDE OF THE ANGLE.							
	OVER & UPTO	0-10	10-50	50-120	120-400	400.....		
	TOLERANCE	±1°	±0°30'	±0°20'	±0°10'	±0°5'		

TITLE:- GENERAL ARRANGEMENT DRG OF LF-90S/L FOOT (B-3) MOUNTING GAS.GROUP- IIA,IIB

	NAME.	DATE.
DGN.		
DRN.	POTDAR	08.09.18
CHD.		08.09.18
APPD.	GRM	08.09.18

SCALE :--1:1

SHEET:- 1 OF 2

Laxmi Hydraulics Pvt.Ltd. SOLAPUR

Website : www.lhp.co.in

UNLESS OTHERWISE SPECIFIED ALL DIMNS. ARE IN MM. DO NOT SCALE THE DRAWING.

DRG. NO. MGAF090A0123

ISSUE NO. 01 REV.NO. 00

\\ppk\D\LHPL DRAWING FILES\DRGS 3\G.A.DWG\MGAF\090\B3\MGAF090A0123.dwg

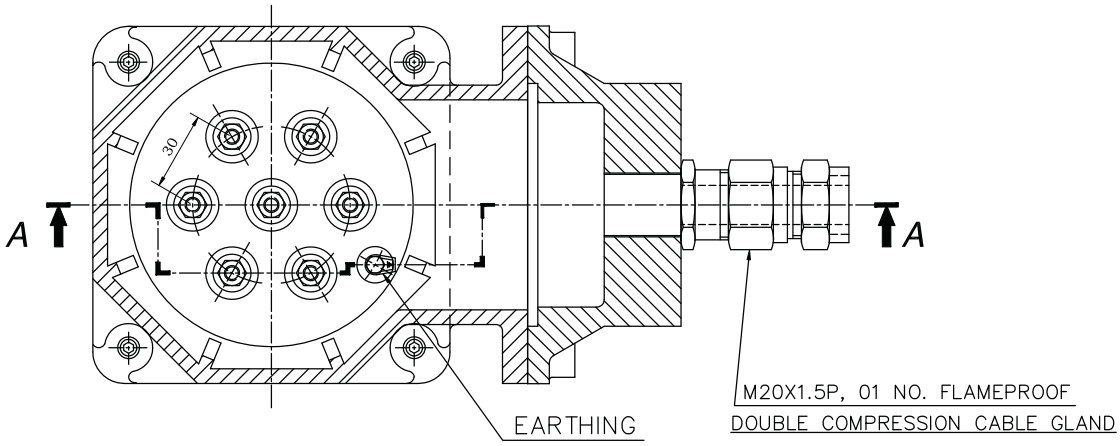

SECTION B-B

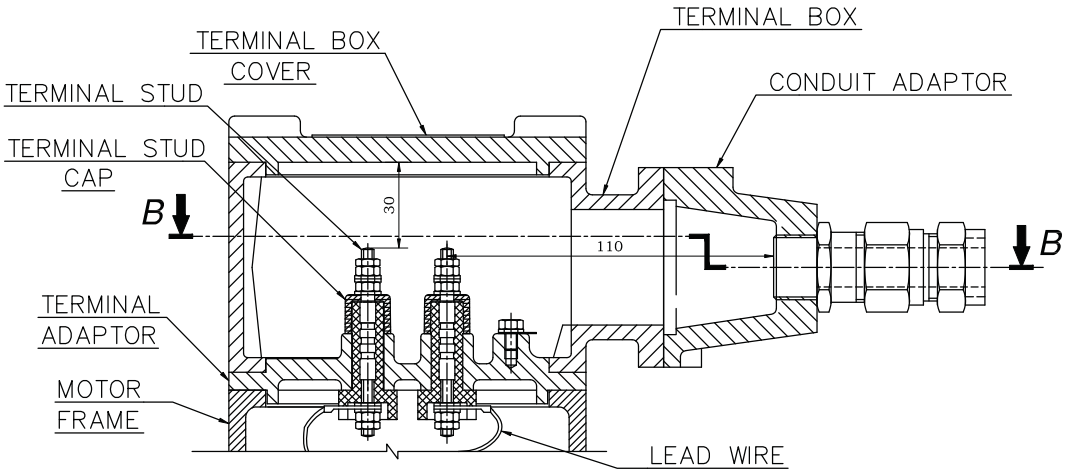

SECTION A-A

REV. NO.	DETAIL OF CHNAGE	DATE.	INTL.
1			

Standardisation	
Gemometrical Reqmnts.	
Surface Finish	
Sectional Views/ Arrows.	
Material Grade	
Process. Reqmnts.	
Gauging Reqmnts.	
Drg.No./ Rev.No./ Issue No.	
Signeture	

UNMENTIONED TOLERANCES ARE AS PER IS:2102-1/ ISO 2768-1

LINEAR DIMNS.	OVER & UPTO	0.5-3	3-6	6-30	30-120	120-400	400-1000	1000-2000
	TOLERANCE	±0.2	±0.3	±0.5	±0.8	±1.2	±2	±3

ANGULAR DIMNS.	PERMISSIBLE DEVIATIONS FOR LENGTHS OF THE SHORTER SIDE OF THE ANGLE.				
OVER & UPTO	0-10	10-50	50-120	120-400	400.....
TOLERANCE	±1°	±0°30'	±0°20'	±0°10'	±0°5'

TITLE:- TERMINAL BOX ARRANGEMENT DRG OF LF-90S/L FOOT (B-3) MOUNTING GAS.GROUP- IIA,IIB

	NAME.	DATE.
DGN.		
DRN.	POTDAR	08.09.18
CHD.		08.09.18
APPD.	GRM	08.09.18

SCALE :--1:1

SHEET:- 2 OF 2

Laxmi Hydraulics Pvt.Ltd. SOLAPUR

Website : www.lhp.co.in

UNLESS OTHERWISE SPECIFIED ALL DIMNS. ARE IN MM. DO NOT SCALE THE DRAWING.

DRG. NO. MGAF090A0123

ISSUE NO. 01 REV.NO. 00

\\ppk\D\LHPL DRAWING FILES\DRGS 3\G.A.DWG\MGAF\090\B3\MGAF090A0123.dwg

Project: (4X270 MW) BHADRADRI THERMAL POWER PROJECT
Customer: TELANGANA STATE POWER GENERATION CORPORATION LIMITED
Principle Consultant:DESEIN PVT. LTD.
Main Contractor: Bharat Heavy Electricals Ltd. Sub Contractor:

S. No.	Description		Data to be filled by successful bidder
A.	**General**		
1	Manufacturer & country of origin		Manufacturer-LHPL , Country of origin-INDIA
2	Motor type		Induction Motor
3	Type of starting		DOL
4	Name of the equipment driven by motor & Quantity		Axial Flow Fan , As per Project requirement
5	Maximum Power requirement of driven equipment		2.2kW
6	Rated speed of Driven Equipment		940 RPM
7	Design ambient temperature		50°C
B.	**Design and Performance Data**		
1	Frame size & type designation		112M flame proof Motor
2	Type of duty		S1
3	Rated Voltage		415
4	Permissible variation for		
5	a	Voltage	±10%
6	b	Frequency	+3% to -5%
7	c)	Combined voltage & frequency	± 10 %
8	Rated output at design ambient temp (by resistance method)		2.2kW
9	Synchronous speed & Rated slip		1000RPM & 6.0%
10	Minimum permissible starting voltage		85%
11	Starting time in sec with mechanism coupled		2 SEC 3 SEC
12	a)At rated voltage		
13	b)At min starting voltage		
14	Locked rotor current as percentage of FLC(including IS tolerance)		900%
15	Torque		
	a)Starting		190%
	b)Maximum		240%
16	Permissible temp rise at rated output over ambient temp & method		70 Deg by resistance Method
17	Noise level at 1.0m (dB		AS PER I.S.-12065
18	Amplitude of vibration		AS PER I.S.-12075
19	Efficiency & P.F.at rated voltage & frequency		
	a)At 100% load		84.3% & 0.73
	c)At 75% load		83.6% & 0.67

NAME OF VENDOR			SEAL	REV.	
Laxmi Hydraulics Pvt..Ltd.		04/09/2018			
NAME	SIGNATURE	DATE		R0	

S. No.	Description	Data to be filled by successful bidder
	c)At starting	0.39
C.	**Constructional Features**	
1	Method of connection of motor driven equipment	Connection with Direct Drive--Axial Fan
2	Applicable Standard	IS/IEC 60034-1
3	DOP of Enclosure	IP-55
4	Method of cooling	IC4A1A1
5	Class of insulation	Class F with temp. rise limited to class B R2
6	Main terminal box	
	a)Type	REFER GAD
	b)Power Cable details (Conductor , size , armour / unarmour)	3C-2.5Sqmm Cu Armoured R2
	c)Cable Gland & lugs details (Size , type & material)	DCCG & REFER GAD
	d)Permissible Fault level (kA rms & duration in sec)	50kA for 0.25Sec
7	Space heater details (Voltage & watts)	Not Applicable
8	Flame proof motor details (if applicable)	NOT APPLICABLE
	a)Enclosure	
	b)suitability for hazardous area	
	i Zone	~~0~~ / ~~I~~ / II
	ii Group	IIA & IIB / ~~IIC~~
9	No. of Stator winding	One
10	Winding connection	Delta
11	Kind of rotor winding	Squirrel Cage
12	Kind of bearings	DGBB
13	Direction of rotation when viewed from NDE	Bi-directional
14	Paint Shade & type	RAL 5012
15	Net weight of motor	86 KG APPROX
16	Outline mounting drawing No (To be enclosed as annexure)	Enclosed
D.	**Characteristic curves / drawings** (To be enclosed for motors of rating 2.2kW)	
	a)Torque speed characteristic	Enclosed
	b)Thermal withstand characteristic	Enclosed
	c)Current vs time	Enclosed
	d)Speed vs time	Enclosed

NAME OF VENDOR			SEAL	REV.	
Laxmi Hydraulics Pvt..Ltd.		04/09/2018			
NAME	SIGNATURE	DATE		R0	

MKTG Ref No.: D6PP18090	LAXMI HYDRAULICS PVT LTD. , B-11- MIDC CHINCHOLI , SOLAPUR.	LHP MOTORS DRIVES Driven by Commitment

SPEED Vs TORQUE & CURRENT CHARACTERISTICS

CUSTOMER : TELANGANA STATE POWER GENERATION CORP. LTD.

W.O. NO.: D6PP1809005 SAP NO: - IE-3

kW : 2.2 POLE : 6 VOLTS : 415 QTY : 5

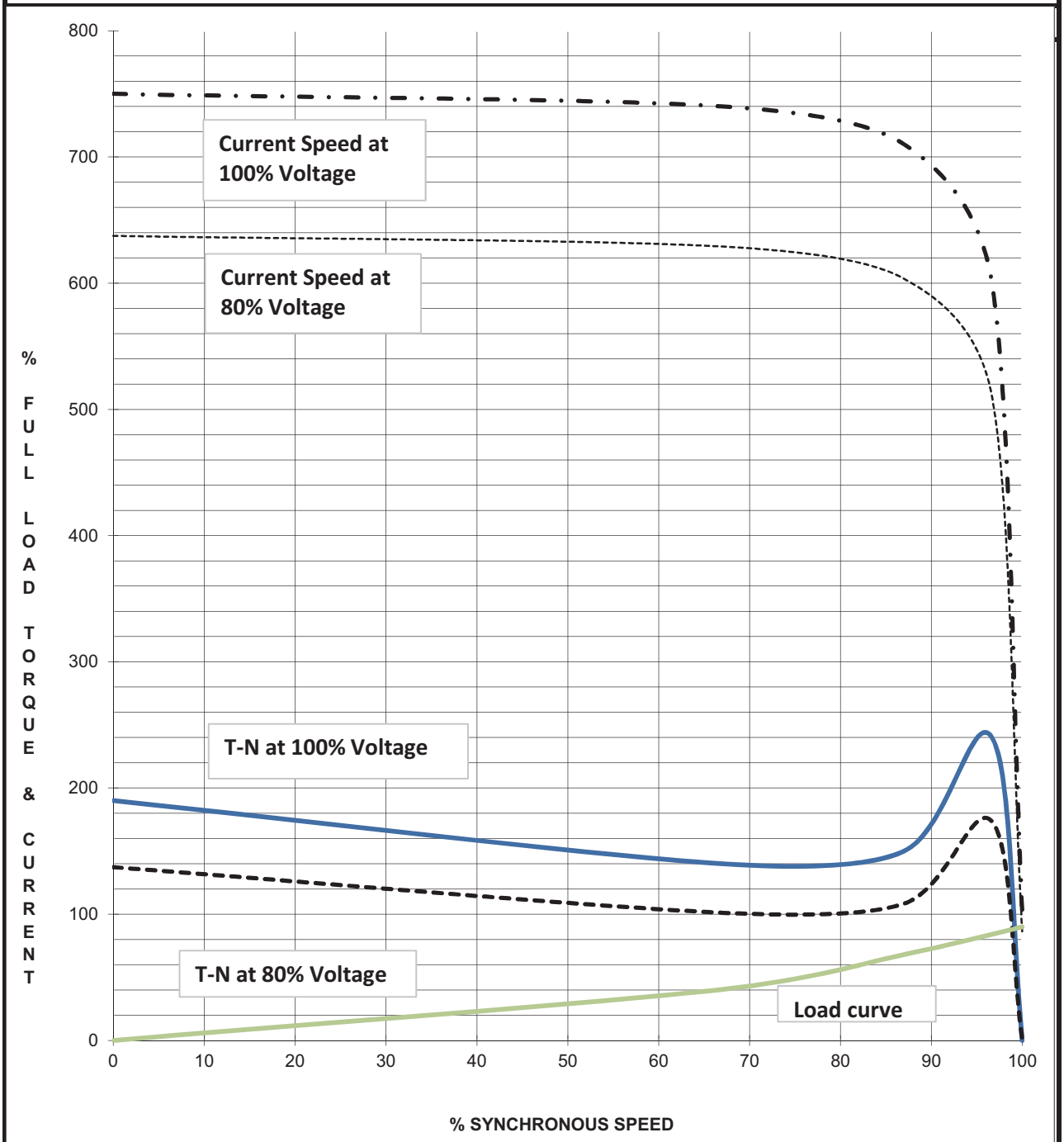

NO	REVISION	SIGN		SIGN	DATE
2			PREP	JMK	17-11-18
1			APPD	RN	17-11-18

MKTG Ref No.: D6PP1809005	LAXMI HYDRAULICS PVT LTD. , B-11- MIDC CHINCHOLI , SOLAPUR.	LHP MOTORS DRIVES Driven by Commitment

LOAD Vs EFF., P.F.,

CUSTOMER : TELANGANA STATE POWER GENERATION CORP. LTD.

W.O. NO. D6PP1809005 SAP NO: -

kW : 2.2 POLE : 6 VOLTS : 415 QTY : 5

IE-3

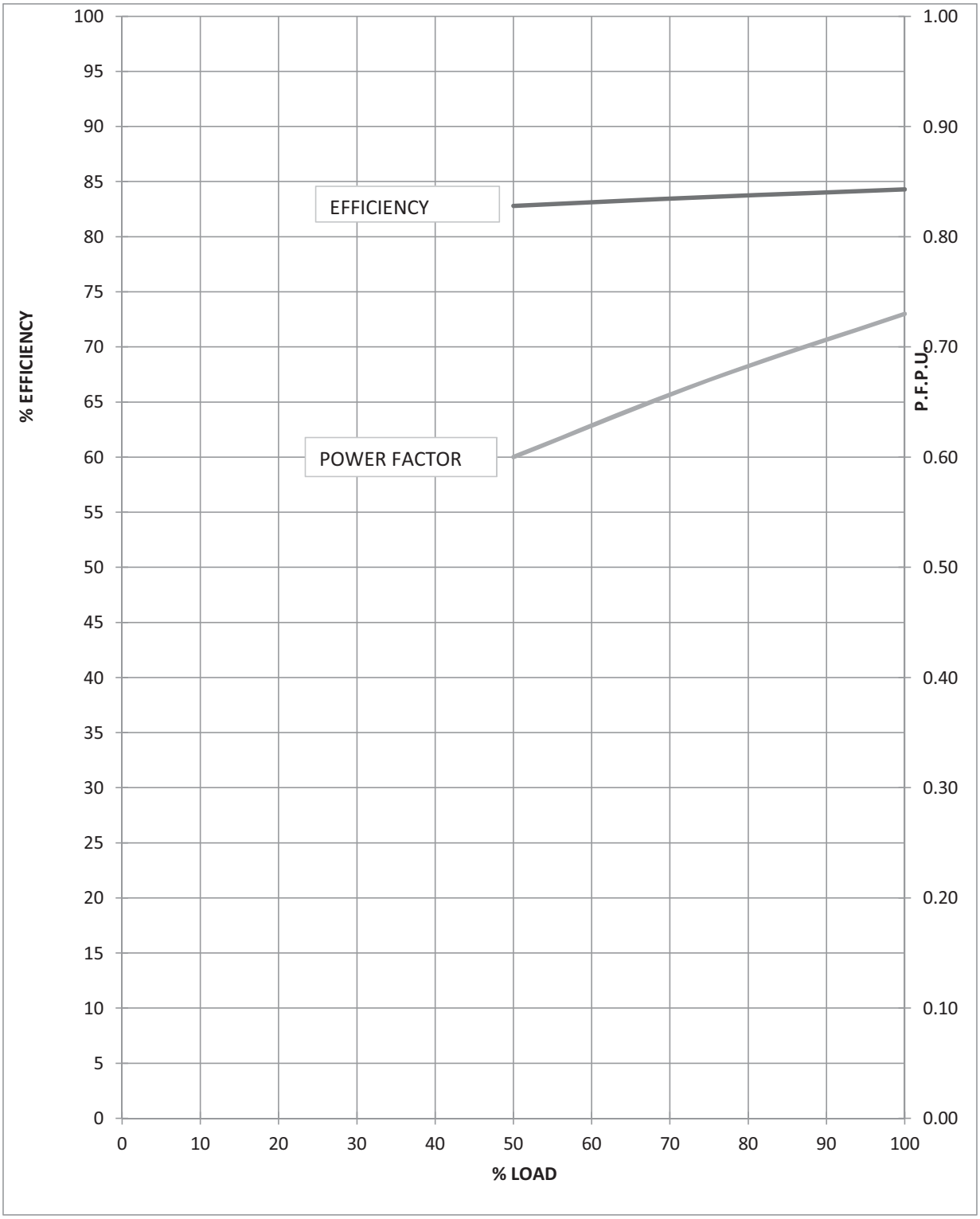

NO	REVISION	SIGN			DATE
2			PREP	JMK	17-11-18
1			APPD	RN	17-11-18

MKTG Ref No.:	D6PP1809005	LAXMI HYDRAULICS PVT LTD. , B-11- MIDC CHINCHOLI , SOLAPUR.	

STARTING CURRENT VS STARTING TIME AND THERMAL WITHSTAND TIME.

CUSTOMER			: TELANGANA STATE POWER GENERATION CORP. LTD.		
W.O. NO. :	D6PP1809005		SAP NO:	-	IE-3
kW :	2.2	POLE : 6	VOLTS :	415	QTY : 5

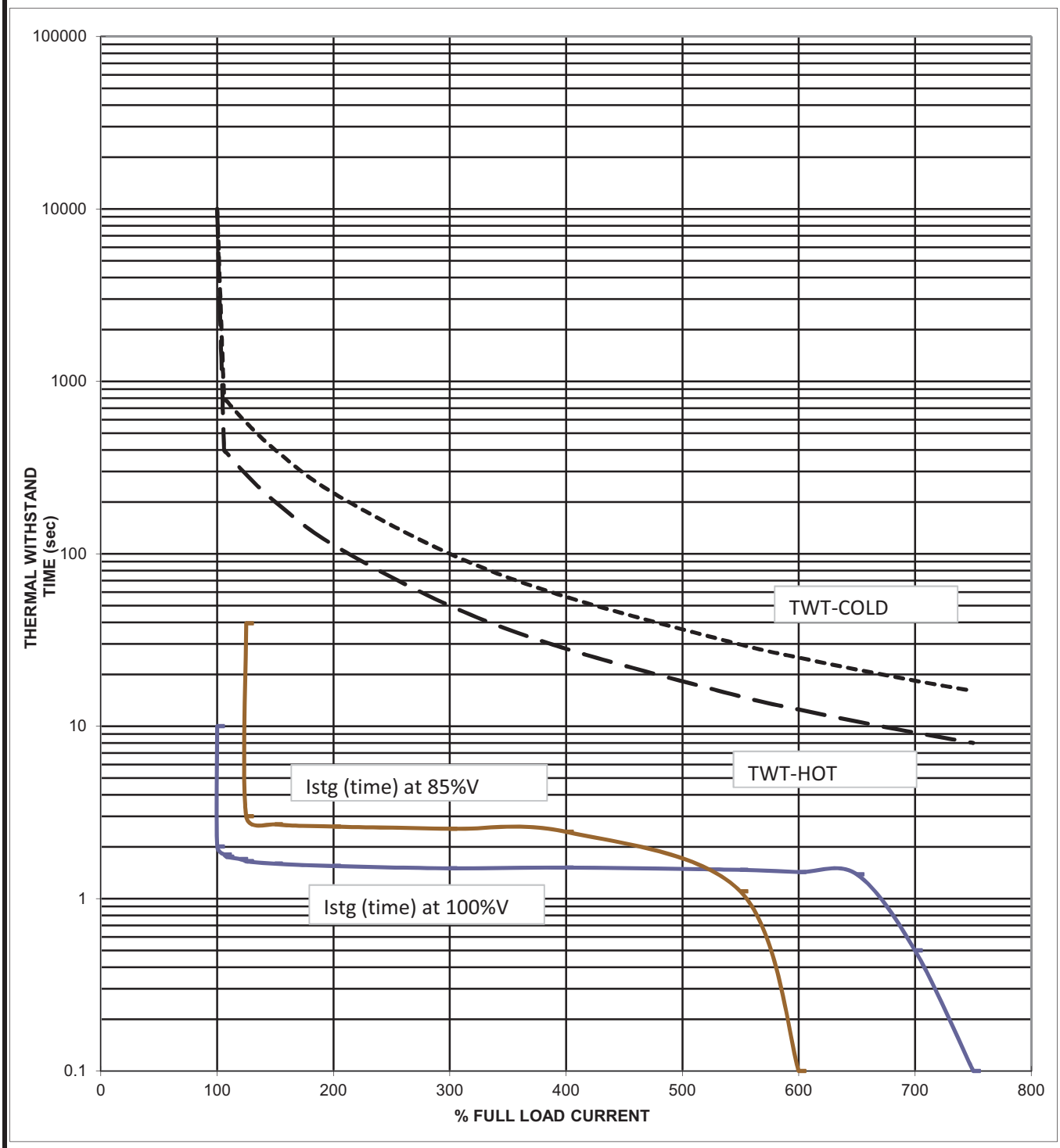

L. R.CURRENT at 100% voltage :	750	% OF FLA	THERMAL WITHSTAND TIME(sec):	
Starting time at 100% voltage=	2	sec	AT100% RATED VOLTAGE (HOT)	8
Starting time at 85% voltage=	3	sec	AT100% RATED VOLTAGE (COLD)	16

NO	REVISION	SIGN			SIGN	DATE
2				PREP	JMK	17-11-18
1				APPD	RN	17-11-18

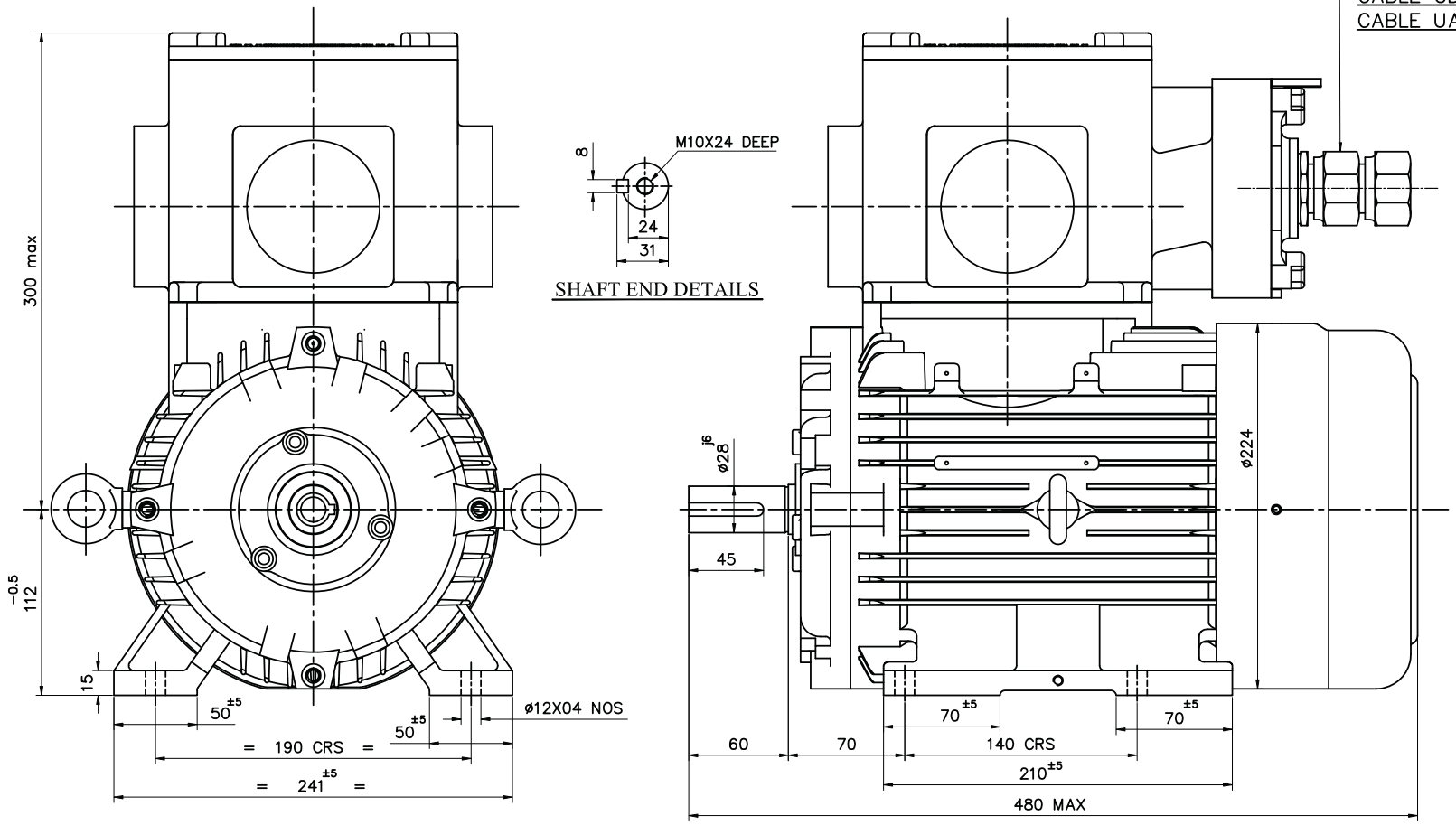

SPECIFICATION:-

KW/HP	2.2/3
POLE	6
BEARING DE SIDE	6306.ZZ.
BEARING NDE SIDE	6206.ZZ.

MATERIAL OF CONSTRUCTION-

FRAME	CAST IRON
END COVER (DE)	CAST IRON
END COVER (NDE)	CAST IRON
T.BOX & COVER	CAST IRON
SHAFT	40C8

PROD CODE:-

UNMENTIONED TOLERANCES ARE AS PER IS:2102-1/ ISO 2768-1	LINEAR DIMNS.	OVER & UPTO	0.5-3	3-6	6-30	30-120	120-400	400-1000	1000-2000
		TOLERANCE	±0.2	±0.3	±0.5	±0.8	±1.2	±2	±3
	ANGULAR DIMNS.	PERMISSIBLE DEVIATIONS FOR LENGTHS OF THE SHORTER SIDE OF THE ANGLE.							
		OVER & UPTO	0-10	10-50	50-120	120-400	400.....		
		TOLERANCE	±1°	±0°30'	±0°20'	±0°10'	±0°5'		

	NAME.	DATE.
DGN.		
DRN.	VALSANGE	08.09.18
CHD.		08.09.18
APPD.		08.09.18

SCALE :--1:1
SHEET :--1 / 2

TITLE

GENERAL ARRANGEMENT DRG. FOR
LFN-112M FOOT MOUNTED FLP MOTOR
(GAS GROUP-IIA.IIB.IIC)

Laxmi Hydraulics Pvt.Ltd.
Website : www.lhp.co.in SOLAPUR

DRG. NO.
MGAF112A0106

UNLESS OTHERWISE SPECIFIED ALL DIMNS. ARE IN MM. DO NOT SCALE THE DRAWING.

ISSUE NO. 01 REV.NO. 01

REV. NO.	DETAIL OF CHANGE	DATE.	INTL.
1	CABLE SIZE ADDED	14.11.18	SSV

LAXMI HYDRAULICS PVT. LTD, SOLAPUR

TERMINAL BOX ARRANGEMENT OF LFN-112 FRAME MOTOR (GAS GROUP-IIA.IIB.IIC)

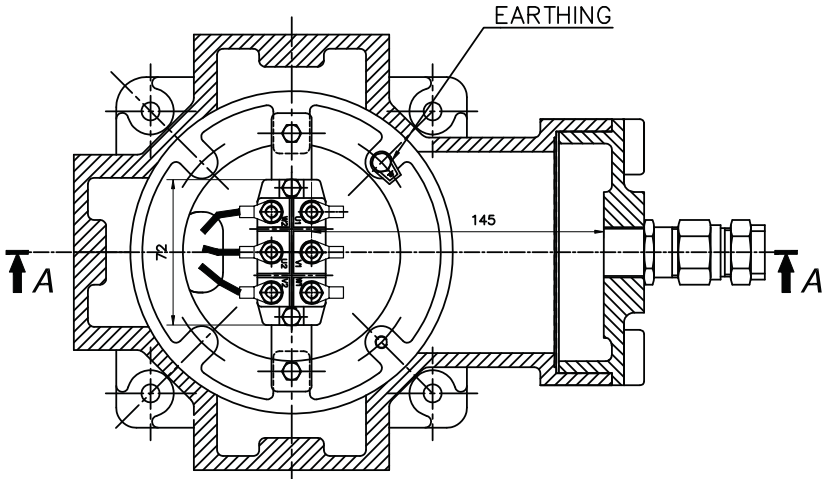

SECTION B-B

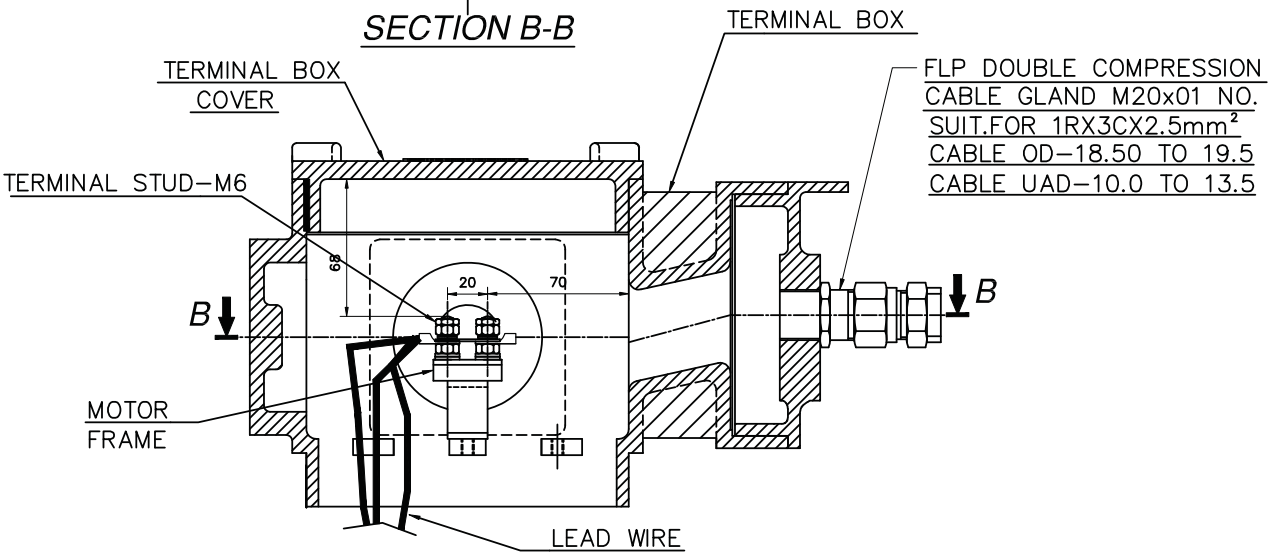

SECTION A-A

TERMINAL BOX DETAILS

ISSUE.NO.–01	REV.NO.–01	DATE– 08.10.17	DRG.NO.–MGAF112A0106
SHEET NO.–2 OF 2	DRN.BY.– VALSANGE	CHD. BY.–	APPD.BY.–

\\Ppk\d\LHPL DRAWING FILES\DRGS 3\G.A.DWG\MGAF\112\B3\MGAF112A0106.dwg

DATA SHEET OF PROPELLER FANS FOR VENTILATION SYSTEMS

MARATHON MAKE RING MOUNTED PROPELLER FANS

DESCRIPTION	TECHNICAL DATA
MODEL NO	GPN30061
AIR DELIVERY CMH	1200
STATIC PRESSURE	5 MM WG
VOLTAGE	230 +-10
FREQUENCY	50HZ+-5%
COMBINED	+-10%
MOTOR PROTECTION	IP-55
CLASS OF INSULATION	F
INPUT WATT	50
CURRENT (AMPS)	0.22
PAINT	As Per OEM
SHAFT ORIENTATION	Vertical/ Horizontal
SPEED (RPM)	900
MAKE	MARATHON
TOLERANCE	IS2312
QTY-	As Per Approved Fan Schedule
SWEEP	300MM
WEIGHT	7.1 KG
NOISE AT 1.5 METER	75db (A)
MATERIAL CON. IMPELLER & HUB	CRCA
MATERIAL CON, RING, PARM,HARDWARE	MS

Note: Mounting frame and Gravity Louver will be provided.

REV	DRAWING NO.	REF. DRG. NO. :	IF IN DOUBT , PLEASE ENQUIRE
05	C12.R1.12.10.15. DE0298	DE 0119 DE 0239 DE 0122	

These drawing and design are the property of Marathon Electrical Motors (India) Limited. These must not be copied or lent to any other party without the written consent of Marathon Electrical Motors (India) Limited.

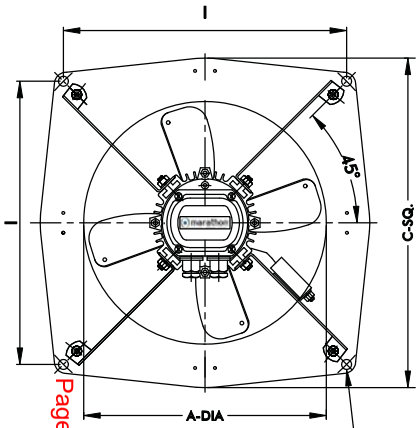

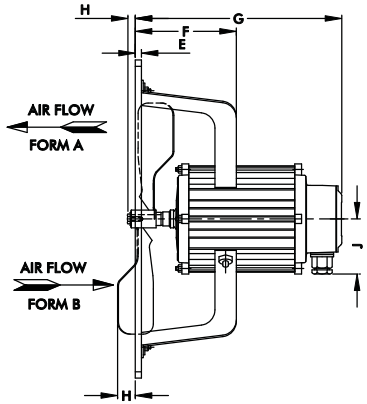

GPN FAN (300 - 450)

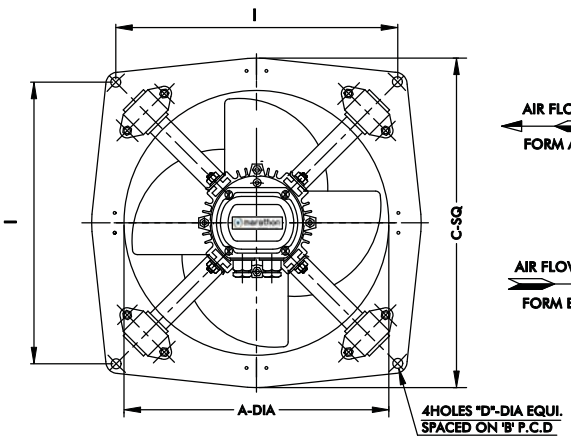

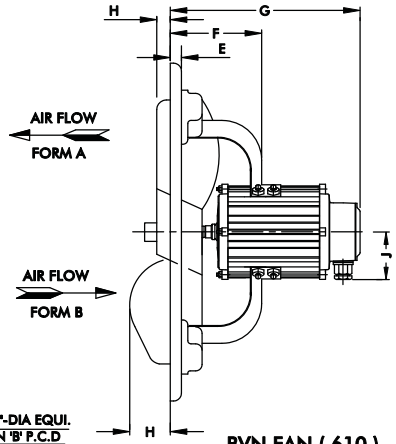

BVN FAN (610)

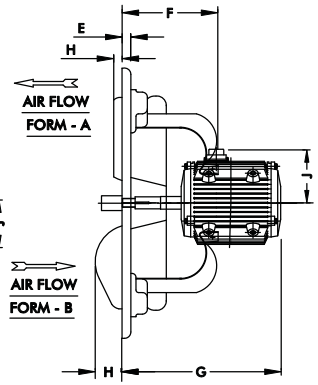

BVA FAN (915)

GPN SERIES & BVN /BVA SERIES

PART NO.	BRAND	SWEEP	A	B	C	D	E	F	G	H FORM-A	H FORM-B	I	J	WT. (KG) (APPROX)
6	BVA	915	952	1181	1060	17	19	234	436	7	15	835	165	65
5	BVN	610	635	844	715	11	12.5	196.5	359	4	36	596	74	24
4	BVN	457	482	635	546	11	12.5	151	284	--	7	449	61	14
3	GPN	450	482	635	546	11	12.5	129.5	234	3.5	13.5	449	61	10.1
2	GPN	380	406	530	467	9.5	9.5	116.5	220	13	29	374	61	9.3
1	GPN	300	330	447	384	9.5	9.5	101.5	195	23	41	316	61	7.1

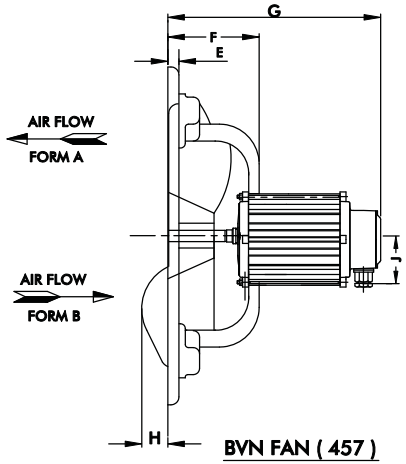

BVN FAN (457)

REV.	DATE	DETAIL OF REVISION	DONE BY	APPRVD	DDN NO.	DCN NO.
05	07.12.07	LOGO CHANGED AND BLOCK MODIFIED	K.MAITRA	R.RANJAN	C12DD2676	C12DC1285
04	14.07.05	CHART MODIFIED, " I " ADDED.	K.MAITRA	R.RANJAN	C12DD2355	C12DC1099
03	14.07.05	CHART MODIFIED, " I " ADDED.	K.MAITRA	R.RANJAN	C12DD2355	C12DC1099
02	26.06.04	BVN457 GA DRG REVISED AND SEPARATED	K.MAITRA	R.RANJAN	C12DD2188	C12DC0999

REF. DRG. NO.
DDN NO.
PATTERN NO.
PATTERN TYPE
PROJECTION
MATERIAL:
S.O. NO.

marathon electric
A Regal Beloit Company

Marathon Electrical Motors (INDIA) Limited
Paharpur Works, 58 Taratala Road.Kolkata - 700024.

TITLE: OUTLINE DIMENSIONAL DRAWING FOR 300mm.,380mm. ,450mm. GPN. 457mm.,610mm. BVN AND BVA 915mm. FAN.

DRAWN	K.MAITRA		14.07.05
CHECKED	K.MAITRA		14.07.05
APPRVD.	R.RANJAN		14.07.05
SCALE	N.T.S	SIGN	DATE

DRAWING NO. C12.R1.12.10.15. DE0298 — REV 05

Project : 4 x 270 MW BHADRADRI TPS AT MANUGURU, KHAMMAM DISTRICT, TELANGANA
Doc. No. : PE-V0-411-554-A602, R1

COMMENT RESOLUTION SHEET

S/N	TSGENCO / DESEIN COMMENTS	BHEL /
1	Please provide Differential Pressure switch across SS and Mesh filter	Kindly note that pressure across the filter is atmospheric and air is constantly washed by water so it is difficult to measure the Pressure drop. Hence same is not required. Kindly accept
2	Level gauge shall also be provided in addition to Level transmitter provided.	Kindly note that the height of the tank is 800mm only, so it is difficult to provide level gauge. LT has been provided as discussed during meeting dated 16.02.2018
3	KKS tag nos. shall be mentioned for all field instruments, valves, pumps, etc.	Noted and incorporated in revised drawing.
4	Please indicate type of centrifugal fan and capacity of fan shall be corrected as per approved heat load calculations.	Centrifugal fan is DIDW type for Air washer and SISW type for UAF. Capacity has been shown in P & ID as per approved ventilation system sizing calculation.
5	Velocity of suction line shall be limited to 1.5m/s. Please correct the pipe size accordingly.	Pipe size is calculated based on velocity 2.0m/s as per industrial practice.
6	Quantity of clarified water required shall be indicated with pressure.	Make up water quantity is 26 LPM as per manufacturer. Terminal Pressure shall be 0.5 kg/cm2. Make up water quantity is 10 LPM as per manufacturer. Terminal Pressure shall be 0.5 kg/cm2. Same has been incorporated in drawing.
7	Please add a note regarding velocity to be considered in designing AWU/UAF and intake louver.	Air Velocity through Intake louver (air washer & UAF) shall be 2.5 m/s (max). Note in this regard has been added in P & ID
8	As per specification control device using humidistat shall be interlocked with a two-way actuator operated control valve to be mounted on the header of spray bank which is not connected with the filter washing. Humidity beyond 60% RH in these ventilated spaces shall automatically close the two-way valve. Please correct.	It is informed that humidistat in following areas shall be provided. a) MV switchgear room b) LV switchgear room; and c) Boiler MCC room BHEL& S&W shall incorporate the logic such that with these humidistat, air washer pump shall be tripped in case RH value goes beyond 60 % and pump shall cut-in automatically in case RH is around 50 %. It is further informed that present arrangement shall be retained which shall ensure saving in power consumption as pump(s) shall not be operational continuously. This is also as per MOM dated 15.05.18 held at Hyderabad.
9	Refer P&ID for Air Washer unit:	
a	Bird screen shall be provided along with louver and MOC shall be GI.	Noted & incorporated in the drg
b	Centrifugal fan shall be of 2x50% instead of 1x100%.	Please note that 1 X 100 % centrifugal fan per air washer has been provided as per BHEL technical offer (i.e. clause no 4.1.1 of design memorandum of ventilation system (PE-DC-K27 -554-A001, Extract of same are attached as annexure) and pricing has been done accordingly. Further same has been accepted as part of design memorandum approved during post award stage (refer Clause no 4.1.1. of Design memorandum ; PE-DC-411-554-A001, 1 X 100 % centrifugal fan provided per air washer). Based on above, 1 x 100 % centrifugal fan per air washer has been provided. This is also as per MOM dated 15.05.18 held at Hyderabad.
c	Pump capacity shall have 10% margin over the flow calculated as per fan cfm	After considering margin, pump capacity is calculated as 1 CMH water per 1000CMH air as per CEA guide lines (extract attached) and same is provided for all the executed project. Kindly accept
d	Please delete note 8 or correct for air washer.	It is typographical error; Note has been corrected for air washer P & ID
e	Refer zone A-6: Please correct as SS mesh filter with SS/AL frame. Also identify nozzles as SS nozzles	As per approved design memorandum, nozzle shall be SS/Brass type. We have considered brass nozzle. Kindly accept
f	Please provide thermal insulation to be provided for top surface of AWU as per specification.	Air washer is double skin sheet metal casing with 25mm. thk. Polyurethane insulation in between. Roof of air washer shall also have sandwiched insulation. In this case additional insulation on top of air washer is not required and same is in line with agreement drawn during meeting on 15.05.18
g	Refer zone-G-7: Please correct as SS suction screen in SS frame.	Noted & incorporated in the drawing.
h	Please clarify the purpose of spray nozzles provided before drift eliminator.	It indicates double bank spray system
10	Refer P&ID for UAF:	
a	Refer note 1: Please check and confirm the data.	UAF efficiency is 70%, it is corrected in revised drawing.
b	Please include the components included inside the sheet and provide sheet details along with thermal insulation details on the top as per specification.	UAF is single sheet construction and will accommodate all components other than centrifugal fan and pump. BHEL/S&W will provide sandwich double skin panel for top section of UAF only as discussed during meeting MOM dated 15.05.18 held at Hyderabad.
c	Please provide VCD with flexible connection at fan outlet.	Noted & incorporated
d	Please provide GI connection piece between fan and UAF enclosure.	Noted & incorporated. Kindly note that GI connection between Fan and UAF enclosure (containing of Moisture eliminator, SS mesh filter, spray nozzle bank and intake louvre) has been shown.
e	Refer note 8: CI shall be corrected as GI.	Noted & incorporated

d) Battery rooms etc. where gaseous fumes are generated 30

iv) In the areas producing lot of heat, the temperature limitation shall be the criteria for evaporative/ mechanical ventilation as indicated below:

a) Inside dry bulb temperature shall be minimum 5^0C below the summer design ambient dry bulb during the summer for evaporative cooled areas.

b) Inside dry bulb temperature shall be maximum 3^0C above the summer design ambient dry bulb temperature during summer for mechanically ventilated areas.

c) The criterion, which gives higher number of air changes/higher quantity of air in either of the conditions as mentioned above shall be the basis for selecting the required air flow for that area.

v) All ventilation systems shall be designed for continuous duty and shall operate on 100% fresh air basis.

vi) All mechanically ventilated areas shall be positively ventilated by means of supply air fans, generally in combination with exhaust fan/ roof extractors. Wherever exhaust fan/ roof extractors are not provided, such as MCC/ switchgear rooms, the pressurised condition shall be maintained with gravity operated backdraft dampers. However, as exception, hazardous areas and fumes/odor generating areas such as toilets shall be negatively ventilated by means of exhaust air fans/ roof exhausters and inlet louvers.

vii) Supply air fan catering for electrical switchgear/MCC rooms shall be provided with pre-filters and fine filters, while supply air fans for other areas shall be provided with pre-filter only.

viii) The supply air ducts of evaporative/ UAF type ventilation system shall be provided with automatic (motor operated) fire dampers at the entry to each of the enclosed area like switchgear rooms, cable galleries etc. The operation of these automatic dampers shall be interlocked with the fire alarm system and the operation of these dampers shall also be possible from the control panel remote manually.

ix) For maintenance of air washer units, chain pulley block of suitable capacity and/or suitable structure shall be provided in the air washer rooms.

x) Circulating water capacity for air washer units shall be minimum 1 m^3/h per 1000 m^3/h of air flow while for UAF unit, it shall be minimum 0.6 m^3/h per 1000 m^3/h of air flow.

DRAWING No. PE-V0-411-554-A602

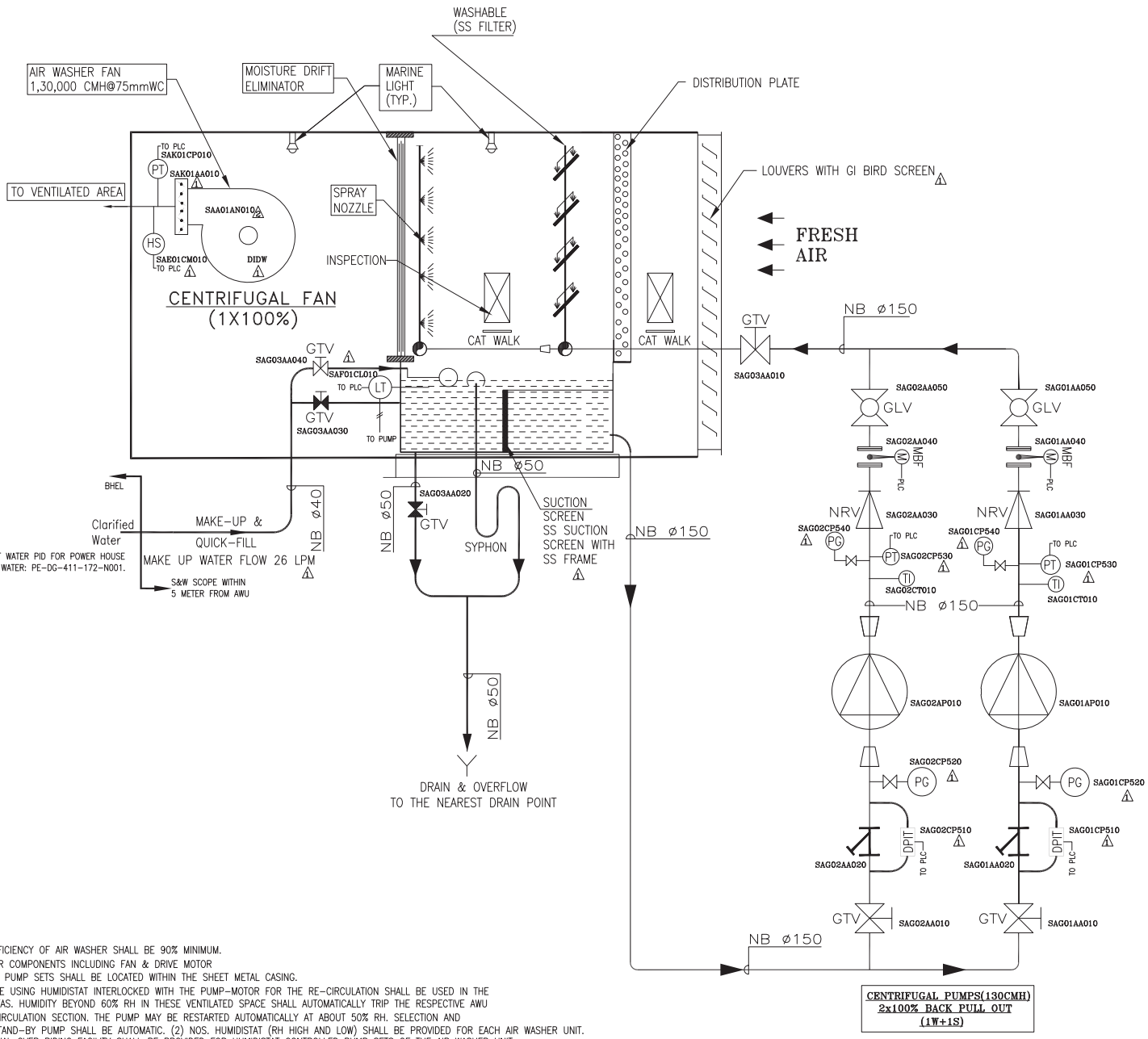

CENTRIFUGAL PUMPS(130CMH) 2x100% BACK PULL OUT (1W+1S)

LEGEND:-

	DESCRIPTION
	GATE VALVE
	GATE VALVE (NORMALLY CLOSED)
	GLOBE VALVE
	CHECK VALVE (NON-RETURN VALVE)
	POT STRAINER
	VOLUME CONTROL DAMPER(OPPOSED BLD.)
	CENTRIFUGAL PUMP
	SS FILTER
PG	PRESSURE GAUGE
PT—TO PLC	PRESSURE TRANSMITTER
LT—TO PLC	LEVEL TRANSMITTER
HS—TO PLC	HUMIDITY SENSOR
TI	TEMPERATURE INDICATOR
	FLOAT VALVE
	REDUCER
	SCOPE OF SUPPLY
	CENTRIFUGAL FAN
DPIT—TO PLC	DIFFERENCIAL PRESSURE INDICATING TRANSMITTER
	DRAIN

LEGEND	DESCRIPTION	SIZE	QTY
M	MOTORISED BUTTERFLY VALVE	150 NB	02
	GATE VALVE	40 NB	02
		50 NB	01
		150 NB	03
	FLOAT VALVE	40 NB	01
	GLOBE VALVE	150 NB	02
	CHECK VALVE	150 NB	02
	Y-STRAINER	150 NB	02
PG	PRESSURE GAUGE	---	04
TI	TEMPERATURE INDICATOR	---	02
PT—TO PLC	PRESSURE TRANSMITTER (AIR PATH)	---	01
PT—TO PLC	PRESSURE TRANSMITTER (WATER LINE)	---	02
DPIT—TO PLC	DIFFERENTIAL PRESSURE INDICATING TRANSMITTER	---	02
LT—TO PLC	LEVEL TRANSMITTER	---	01
HS—TO PLC	HUMIDITY SENSOR	---	01

NOTES:-

1. SATURATION EFFICIENCY OF AIR WASHER SHALL BE 90% MINIMUM.
2. ALL AIR WASHER COMPONENTS INCLUDING FAN & DRIVE MOTOR BUT EXCLUDING PUMP SETS SHALL BE LOCATED WITHIN THE SHEET METAL CASING.
3. CONTROL DEVICE USING HUMIDISTAT INTERLOCKED WITH THE PUMP-MOTOR FOR THE RE-CIRCULATION SHALL BE USED IN THE ELECTRICAL AREAS. HUMIDITY BEYOND 60% RH IN THESE VENTILATED SPACE SHALL AUTOMATICALLY TRIP THE RESPECTIVE AWU PUMP FOR RECIRCULATION SECTION. THE PUMP MAY BE RESTARTED AUTOMATICALLY AT ABOUT 50% RH. SELECTION AND STARTING OF STAND-BY PUMP SHALL BE AUTOMATIC. (2) NOS. HUMIDISTAT (RH HIGH AND LOW) SHALL BE PROVIDED FOR EACH AIR WASHER UNIT. HOWEVER, MANUAL OVER RIDING FACILITY SHALL BE PROVIDED FOR HUMIDISTAT CONTROLLED PUMP SETS OF THE AIR WASHER UNIT.
4. 4. CLARIFIED WATER SHALL BE PROVIDED BY BHEL FOR MAKE UP WATER REQUIREMENT AS PER TECHNICAL SPECIFICATION.
5. ALL DRAIN WILL BE CONNECTED TO NEAREST(AIRWASHER UNIT) DRAIN POINT (BY VENDOR)
6. ALL WATER PIPING SHALL BE AS PER TECHNICAL SPECIFICATION.
7. THICKNESS OF TANK SHALL BE 5mm (min.) WITH EPOXY PAINT BOTH INSIDE AND OUTSIDE AND MINIMUM DEPTH AS 800mm.
8. GI PIPE HEAVY CLASS FOR AWU SHALL BE PROVIDED FOR SPRAY SYSTEM.
9. CAT WALK OF 600mm WIDE SHALL BE PROVIDED.
10. VELOCITY THROUGH INTAKE LOUVRE SHALL BE 2.5 M/S (MAX)

REV NO.	DATE	REMARKS	DRAWN NAME	DRAWN SIGN	CHECKED NAME	CHECKED SIGN
01	05.10.18	REVISED AS PER DESIGN COMMENTS DURING MEETING DTD: 05.10.18	SB		SC	
01	26.07.18	REVISED AS PER DESIGN COMMENTS	SB		SC	

CUSTOMER : TELANGANA STATE POWER GENERATION CORPORATION LTD.

CUSTOMER'S CONSULTANT : DESEIN PRIVATE LIMITED

PROJECT : 4 x 270 MW BHADRADRI TPS AT MANUGURU, KHAMMAM DISTRICT, TELANGANA

BHARAT HEAVY ELECTRICALS LTD. POWER SECTOR PROJECT ENGINEERING MANAGEMENT NOIDA, (UP)

TITLE : PID FOR AIRWASHER UNIT.

Drg No. PE-V0-411-554-A602

SCALE - NTS. SHEET 1 OF 2 REV. 01

	ELECTRICAL FEEDER LIST	CUSTOMER: TSGENCO							Dated: 22.03.2022	
		JOB: 4x270 MW BHADRADRI - FGD				JOB NO: 440			Doc No. PE-DC-440-571-13000-A001	
		SYSTEM: HVAC FOR FGD					SI.No.: 571-13000		Rev 03	
S No	TITLE	LOCATION	UNIT No	NAME PLATE kW	NO OF WORKING	NO OF STANDBY	CONTI/INTT	VOLTAGE CODE	LOAD CODE	REMARKS
A.	**FGD CONTROL ROOM**									
1	Air washer			37	1	0	C	D	U	High inertia fan
2	MARINE LAMP FOR Air washer			0.1	2	0	C	E	S	
3	Pumps			15	1	1	C	D	U	
4	Control Panel for Air washer			2	1	1	C	E	S	
5	Wall mounted axial exhaust fan (Bifurcated type)			1.1	2	2	C	D	U	
6	Proppeller fan			0.1	4	0	C	E	S	
7	Air cooled precesion package unit for control room			44	4	2	C	D	D	Contactor Controlled , without overload relay
8	Control Panel for Precession package unit			2	1	1	C	E	S	
11	Fresh Air Fan for above PAC room			1.5	1	0	C	D	U	Contactor Controlled
B.	**LIMESTONE GRINDING BUILDING (WET BALL MILL BUILDING)**									
1	Proppeller fan			0.1	2	0	C	E	S	
2	Supply fan for tool room			1.1	1	0	C	D	U	
3	Split AC for AC area for for RIO Panel			2.2	4	2	C	E	S	With SFU
C.	**GYPSUM DEWATERING BUILDING**									
1	Axial flow exhaust fan at 0.0M			1.1	12	0	C	D	U	
2	Axial flow exhaust fan at 10.0M			1.1	8	0	C	D	U	
3	RE exhaust fan at 18.5M			2.2	2	0	C	D	U	
4	Proppeller fan			0.1	2	0	C	E	S	

VOLTAGE CODE: (AC), A=11kV, B=6.6kV, C=3.3kV, D=415V, E=240V (1 Ph), F= 110 (DC) G-220V, H= 110V, K=+24V, L=-24V
LOAD CODE: U= Unidirectional Starter, B= Bidirectional Starter S= Supply Feeder

	ELECTRICAL FEEDER LIST	CUSTOMER: TSGENCO							Dated: 22.03.2022	
		JOB: 4x270 MW BHADRADRI - FGD				JOB NO: 440			Doc No. PE-DC-440-571-13000-A001	
		SYSTEM: HVAC FOR FGD					SI.No.: 571-13000		Rev 03	
S No	TITLE	LOCATION	UNIT No	NAME PLATE kW	NO OF WORKING	NO OF STANDBY	CONTI/INTT	VOLTAGE CODE	LOAD CODE	REMARKS
5	Split AC for AC area for for RIO Panel			2.2	6	2	C	E	S	With SFU
D.	**OXIDATION BLOWER AND RC PUMP HOUSE**									
1	Wall mounted axial supply fan for pump house unit-1			1.5	10	0	C	D	U	Open shed
2	Wall mounted axial supply fan for pump house unit-2			1.5	10	0	C	D	U	Open shed
1	Wall mounted axial supply fan for pump house unit-3			1.5	10	0	C	D	U	Open shed
2	Wall mounted axial supply fan for pump house unit-4			1.5	10	0	C	D	U	Open shed
E.	**SO2 ANALYSER AREA**									
1	Split AC for SO2 analyser control room-1			2.2	2	1	C	E	S	With SFU
2	Split AC for SO2 analyser control room-2			2.2	2	1	C	E	S	With SFU
3	Split AC for SO2 analyser control room-3			2.2	2	1	C	E	S	With SFU
4	Split AC for SO2 analyser control room-4			2.2	2	1	C	E	S	With SFU
F.	**CLARIFIED WATER PUMP HOUSE FOR FGD**									
1	COMMON PUMP HOUSE			2.2	6	0	C	D	U	
2	MCC room for above pump house			1.5	4	0	C	D	U	
3	Toilet for above pump house			0.1	2	0	C	E	S	
G.	**SCR CONTROL ROOM COMMON FOR UNIT**									
1	Split AC for SCR Control room common for Unit-1,2,3 & 4			3	4	2	C	E	S	With SFU
H.	**FGD MV SWITHGEAR ROOM**									
1	Supply fan for FGD SWGR area			2.2	8	0	C	D	U	
2	Exhaust fan for FGD SWGR area			0.55	2	2	C	D	U	

VOLTAGE CODE: (AC), A=11kV, B=6.6kV, C=3.3kV, D=415V, E=240V (1 Ph), F= 110 (DC) G-220V, H= 110V, K=+24V, L=-24V
LOAD CODE: U= Unidirectional Starter, B= Bidirectional Starter S= Supply Feeder

	ELECTRICAL FEEDER LIST	CUSTOMER: TSGENCO							Dated: 22.03.2022	
		JOB: 4x270 MW BHADRADRI - FGD				JOB NO: 440			Doc No. PE-DC-440-571-13000-A001	
		SYSTEM: HVAC FOR FGD					SI.No.: 571-13000		Rev 03	
S No	**TITLE**	**LOCATION**	**UNIT No**	**NAME PLATE kW**	**NO OF WORKING**	**NO OF STANDBY**	**CONTI/INTT**	**VOLTAGE CODE**	**LOAD CODE**	**REMARKS**
3	Wall mounted axial exhaust fan (Bifurcated type)			1.1	1	1	C	D	U	
4	Toilet for FGD SWGR area			0.1	2	0	C	E	S	
5	Split AC for FGD SWGR Control room			3	6	3	C	E	S	With SFU
I.	**COMMON CONTROL ROOM**									
1	Supply fan for FGD SWGR area			2.2	13	0	C	D	U	
2	Exhaust fan for FGD SWGR area			0.55	2	2	C	D	U	
3	Wall mounted axial exhaust fan (Bifurcated type)			1.1	1	1	C	D	U	
4	Toilet for FGD SWGR area			0.1	2	0	C	E	S	
5	Split AC for FGD SWGR Control room			3	12	6	C	E	S	With SFU
J.	**DAY SILO FOR WET BALL MILL BUILDING**									
1	Exhaust fan for Day silo area (A-C & 1-2) at 30.9 to 33.6			0.55	2	0	C	D	U	
2	Exhaust fan for Day silo area (A-C & 1-2) at 33.6 to 39.715			1.1	2	0	C	D	U	

Note:

1	**Feeder list is tentative and is based on input received in tender stage.**
2	**In case of fire, fire damper should close along with the Tripping of Air Washer Fans and RE units in Power House Building. Provision for manual tripping of all the equipment and Fire Damper shall also be provided**
3	**Spare feeders may be considered by Electrical suitably at their end.**
4	**ABBREVIATIONS : *VOLTAGE CODE (AC), A=11kV, B=6.6kV, C=3.3kV, D=415V, E=240V (1 Ph), F= 110 (DC) G-220V, H= 110V, K=+24V, L=-24V** **** FEEDER CODE (8):- U=UNIDIRECTIONAL STARTER, B=BI-DIRECTIONAL STARTER, S=SUPPLY FEEDER, D=SUPPLY FEEDER (CONTACTER CONTROLLED)**

VOLTAGE CODE: (AC), A=11kV, B=6.6kV, C=3.3kV, D=415V, E=240V (1 Ph), F= 110 (DC) G-220V, H= 110V, K=+24V, L=-24V
LOAD CODE: U= Unidirectional Starter, B= Bidirectional Starter S= Supply Feeder

FIRST ANGLE PROJECTION

ALL DIMENSIONS ARE IN MM

DRAWING No. PE-DG-440-100-E006

CUSTOMER'S DRAWING No.

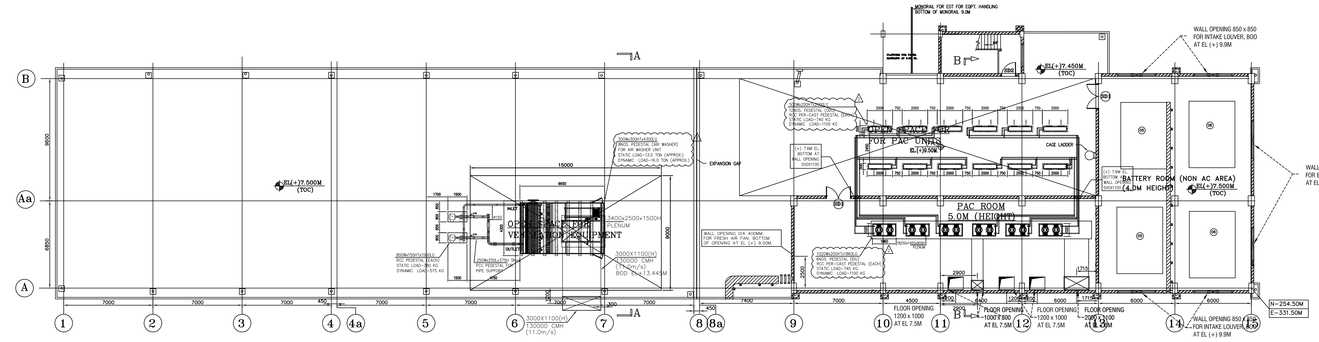

FGD CONTROL ROOM (PLAN AT 7.5M EL.)

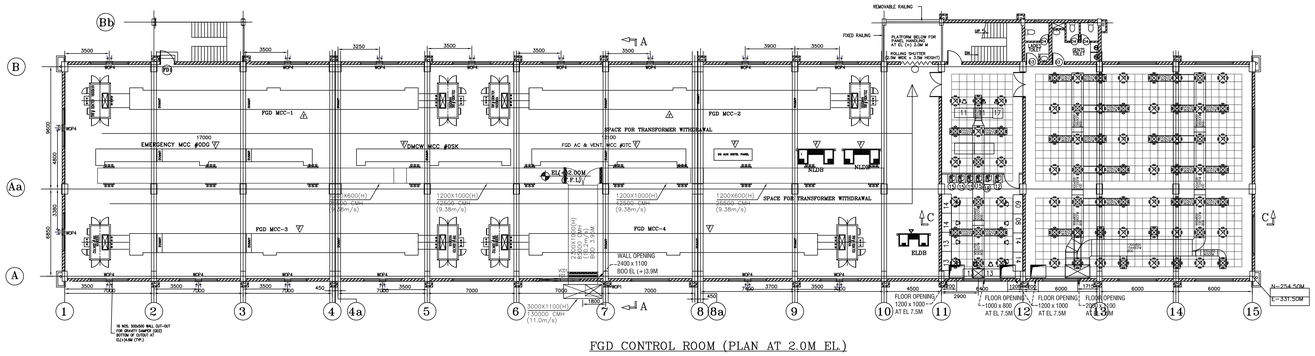

FGD CONTROL ROOM (PLAN AT 2.0M EL.)

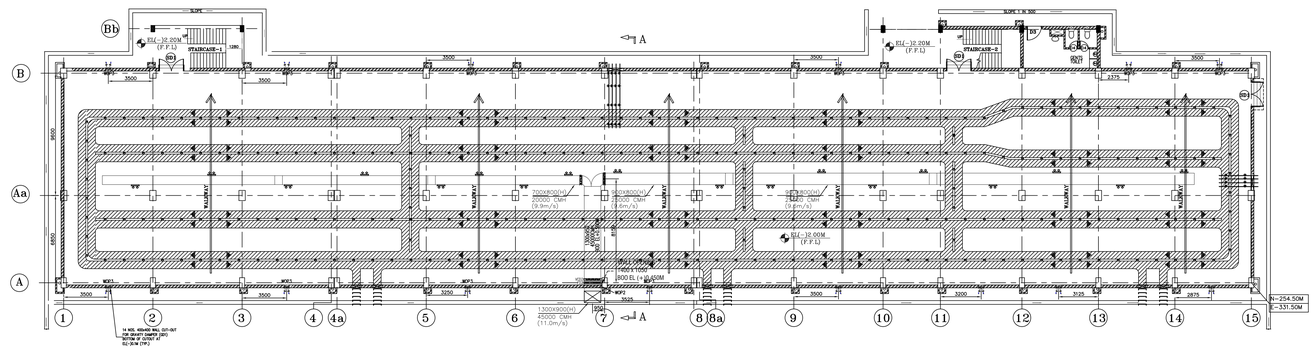

FGD CONTROL ROOM (PLAN AT (–)2.0M EL.)

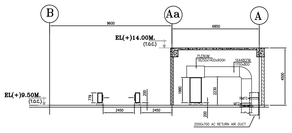

SECTION B–B

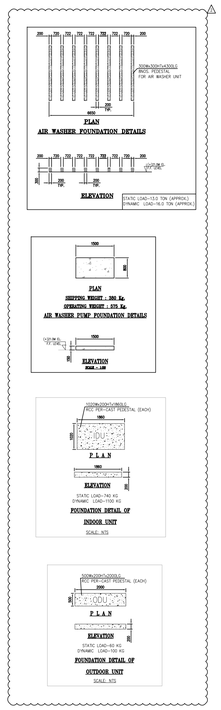

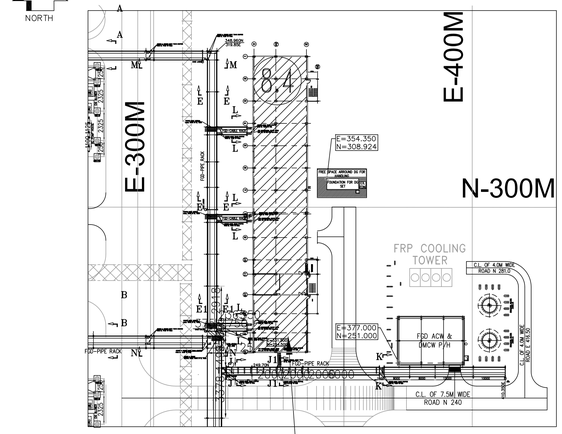

KEY PLAN
(N.T.S)

WALL OPENING DETAILS FOR VENTILATION SYSTEM :

Tag.No.	SIZE	BOTTOM OF OPENING	QTYS.
WOP1	2400Wx1100H	EL (+)3.9M	1No.
WOP2	1400Wx1050H	EL (+)0.450M	1No.
WOP3	400Wx400H	EL (–)0.1M	14Nos.
WOP4	500Wx500H	EL (+)4.6M	16Nos.

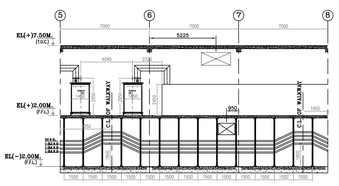

ELEVATION ON GRID 'Aa'

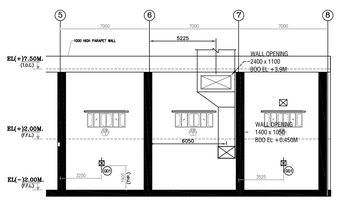

ELEVATION ON GRID 'A'

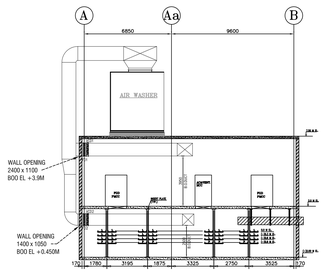

SECTION–AA

CUSTOMER	TELANGANA STATE POWER GENERATION CO. LTD.
CUSTOMER'S CONSULTANT	DESEIN PRIVATE LIMITED
JOB No. 440	4X270 MW BHADRADRI TPS
STATUS CONTRACT	
DISTRIBUTION	

TO								
No.OFT								
REV	DATE	ALTD	CHD	APPD				

BHARAT HEAVY ELECTRICALS LTD
POWER SECTOR
PROJECT ENGINEERING MANAGEMENT
NOIDA

DEPT CODE		NAME	SIGN	DATE
V	DRN	YS	–sd–	18.02.2023
	DESN	AK	–sd–	18.02.2023
	CHD	AK	–sd–	18.02.2023
	APPD	LJ	–sd–	18.02.2023

TITLE
HVAC DUCT LAYOUT IN FGD CONTROL ROOM

MPL	C	MSE	I	MAX	E	DEPT.	SCALE 1:82	DRAWING No.
						SIGN		PE–DC–440–553–554–A002
						DATE		SHEET 1 OF 1 REV 02

SIZE–A0

COMPUTER FILE NAME: 440-100-E006_01.DWG

COPY RIGHT AND CONFIDENTIAL
The information on this document is the property of BHARAT HEAVY ELECTRICALS LIMITED
it must not be used directly or indirectly in any way detrimental to the interest of the company.

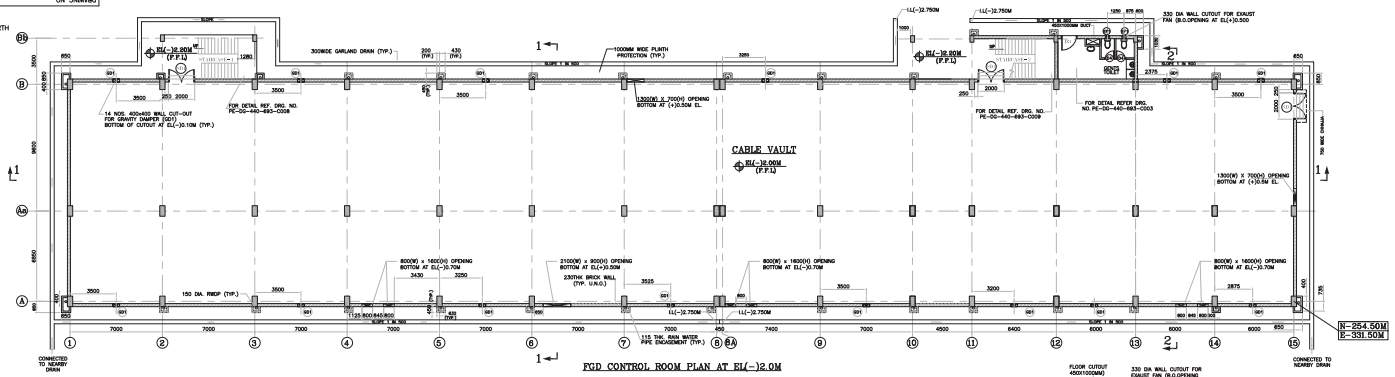

FGD CONTROL ROOM PLAN AT EL(-)2.0M

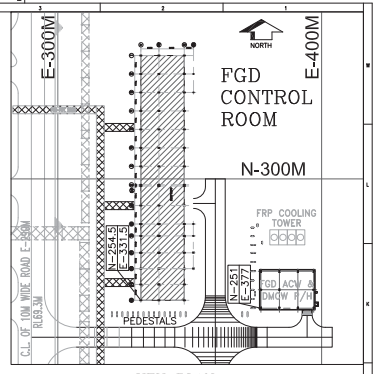

KEY PLAN

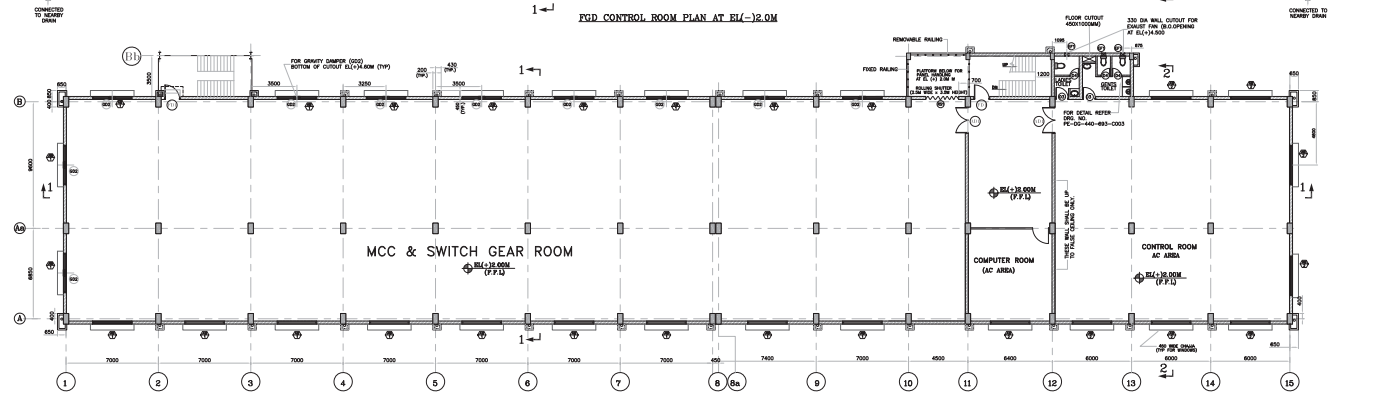

FGD CONTROL ROOM (PLAN AT 4.0M EL)

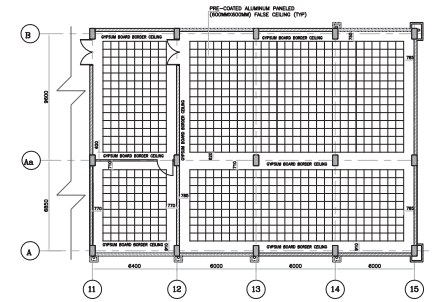

FGD CONTROL ROOM : FALSE CEILING PLAN
CEILING HEIGHT +3.0M FROM FFL

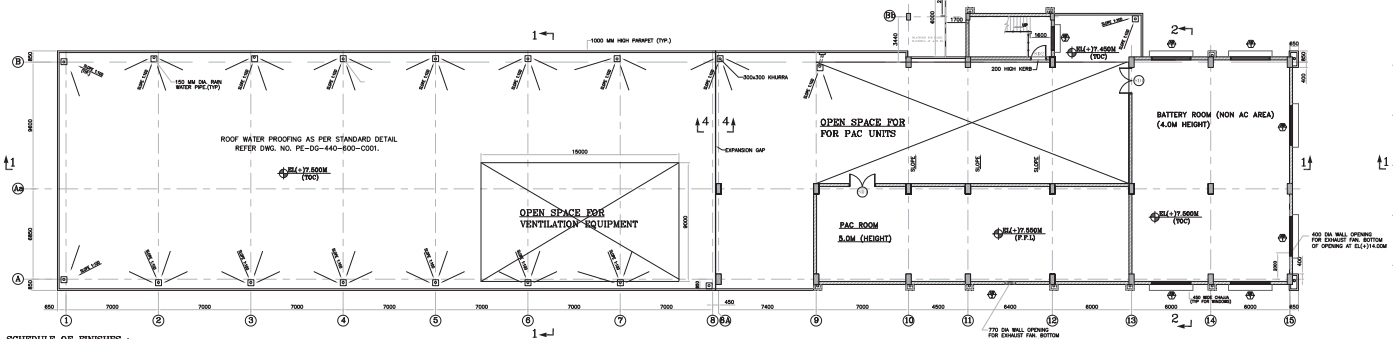

FGD CONTROL ROOM PLAN AT EL(+)7.50M

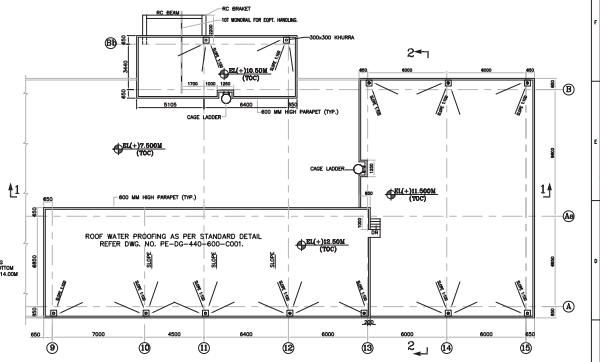

FGD CONTROL ROOM (PLAN AT 12.50 M EL)

SCHEDULE OF FINISHES :-

AREA	FLOORING	DADO/SKIRTING	WALL	CEILING
CABLE VAULT	50 MM THICK HEAVY DUTY CEMENT CONCRETE FLOOR WITH METALLIC HARDENER.	CEMENT CONCRETE, SKIRTING 150 HIGH	SYNTHETIC ENAMEL PAINT UP TO 1.20MTS HEIGHT AND ACRYLIC EMULSION PAINT OVER WHITE CEMENT PUTTY FOR BALANCE HEIGHT	ACRYLIC DISTEMPER PAINT
MCC & SWITCHGEAR ROOM	FLEXIBLE ELECTRIC CONDUCTIVE PVC SHEET FINISH OVER IPS.	CEMENT CONCRETE, SKIRTING 150 HIGH	SYNTHETIC ENAMEL PAINT UP TO 1.20MTS HEIGHT AND ACRYLIC EMULSION PAINT OVER WHITE CEMENT PUTTY FOR BALANCE HEIGHT	ACRYLIC DISTEMPER PAINT
CONTROL ROOM	10 MM THICK NON-SHD FULLY VITRIFIED TILES OF (MINIMUM SIZE 600 MM X 600 MM.	CEMENT CONCRETE, SKIRTING 150 HIGH	ACRYLIC EMULSION PAINT OVER WHITE CEMENT PUTTY.	PRE-COATED ALUMINIUM PANELED (600MM/600MM SIZE) FALSE CEILING
PACKING AC ROOM	50 MM THICK HEAVY DUTY CEMENT CONCRETE FLOOR WITH METALLIC HARDENER.	CEMENT CONCRETE, SKIRTING 150 HIGH	SYNTHETIC ENAMEL PAINT UP TO 1.20MTS HEIGHT AND ACRYLIC EMULSION PAINT OVER WHITE CEMENT PUTTY FOR BALANCE HEIGHT	ACRYLIC DISTEMPER PAINT
BATTERY ROOM	20 THK. ACID AND ALKALI RESISTANT VITRIFIED TILES.	20MM THICK ACID RESISTANT TILES OVER BITUMEN PRIMER UP TO 1.20M HEIGHTS NO ACID/ALKALI RESISTANT EPOXY PAINT FOR BALANCE HEIGHT.	20MM THICK GLAZED CERAMIC TILES UP TO 2100MM AND BALANCE PORTION WITH ACID/ALKALI RESISTANT PAINT OVER WHITE CEMENT PUTTY.	ACRYLIC DISTEMPER PAINT
TOILET AREA	10mm THK. ANTI SKID VITRIFIED TILES (400mm/400mm SIZE)	5MM THICK GLAZED CERAMIC TILES UP TO 2100MM AND BALANCE PORTION WITH ACRYLIC DISTEMPER PAINT OVER WHITE CEMENT PUTTY.		ACRYLIC DISTEMPER PAINT

SCHEDULE OF DOORS

DESIGNATION	SIZE	DESCRIPTION
RSD	2500x3500	ROLLING SHUTTER AS PER SPECIFICATION
ASD	2000x3000	DOUBLE SHUTTER ALUMINIUM DOOR 1500X3000 OPING. HINGING 1500X2100 DOOR WITH 900 MM REMOVABLE TRANSOM
DSS	2000x2100	DOUBLE SHUTTER STEEL DOOR
DSS	1200x2100	DOUBLE SHUTTER STEEL DOOR
FDS	1200x2100	FIRE PROOF DOOR – SINGLE SHUTTER
SW	900x2100	SINGLE SHUTTER WOODEN PANEL DOOR WITH HARD WOOD FRAME.
SW	750x2100	SINGLE SHUTTER SOLID CORE PVC DOOR WITH PVC FRAME

SCHEDULE OF WINDOWS & VENTILATORS

ASW	3000x1200	ALUMINIUM GLAZED WINDOW PARTLY OPENABLE & PARTLY FIXED–WITH 6mm THICK CLEAR FLOAT GLASS.
ASW	3000x1200	ALUMINIUM GLAZED WINDOW ALL FIXED PANELS–WITH 6mm THICK CLEAR FLOAT GLASS.
ASW	1800x1200	ALUMINIUM GLAZED WINDOW PARTLY OPENABLE & PARTLY FIXED–WITH 6mm THICK CLEAR FLOAT GLASS.
WV	330 DIA.	WALL OUTLOUT FOR EXHAUST FAN

SCHEDULE OF EXTERNAL FINISHES

ERBP	150mm ø G I RAIN WATER PIPE.(TYP)
EXTERIOR PLASTERING	IN TWO LAYERS 1st LAYERS 12MM THK. IN 1:4 CEMENT & 2nd LAYERS 8MM THK. IN 1:3 CEMENT
INTERIOR PLASTERING	12MM WITH 1:4 CEMENT SAND MORTAR
CEILING FINISHING	2MM WHITE CEMENT PUTTY
EXTERIOR FINISHING	EXTERNAL QUALITY ACRYLIC EMULSION PAINT.

LEGEND

TYP – TYPICAL
EL – ELEVATION
THK – THICKNESS
FFL – FLOOR FINISH LEVEL
T.O.C. – TOP OF CONCRETE
T.O.P. – TOP OF PARAPET
FGL – FLOOR GROUND LEVEL
LVL – LEVEL
EL – ELEVATION

NOTES :

1. THIS DRAWING SHALL BE READ IN CONJUNCTION WITH TECHNICAL SPECIFICATION.
2. ALL DIMENSIONS ARE IN MM. AND LEVELS ARE IN M. UNLESS NOTED OTHERWISE.
3. ELEVATIONS 0.00M CORRESPONDS TO RL. 69.5M WHICH IS THE FINISHED FLOOR LEVEL OF POWER HOUSE BUILDING.
4. FOR OTHER GENERAL ARCHITECTURAL NOTES REFER DRAWING NO. PE-DG-440-600-C003.
5. UNLESS NOTED OTHERWISE WINDOW / DOOR/ ROLLING SHUTTER LOCATION SHALL BE AT CENTER BETWEEN GRIDS.
6. DISCREPANCY IF ANY SHOULD BE BROUGHT TO THE NOTICE OF ENGR–IN–CHARGE BEFORE EXECUTION OF WORK.

REFERENCE DRAWINGS:–

1. PLOT PLAN----------PE-DG-411-100-M001
2. ELECTRICAL EQUIPMENT & CABLING LAYOUT IN FGD CONTROL ROOM --------PE-DG-440-100-E008
3. FGD CONTROL ROOM ARCH. ELEVATION AND SECTION---PE-DG-440-693-C002
4. FGD CONTROL ROOM – G.A & RC DETAIL OF STAIRCASE-1----PE-DG-440-693-C008
5. FGD CONTROL ROOM – G.A & RC DETAIL OF STAIRCASE-2----PE-DG-440-693-C009
5. FGD CONTROL ROOM – TOILET DETAIL----------PE-DG-440-693-C003

THIS DRAWING SHALL BE READ IN CONJUNCTION WITH DRG NO PE-DG-440-693-C002

BHEL–PROJECT ENGINEERING MANAGEMENT(CIVIL)
THIS DRAWING MARKED(✓) IS RELEASED FOR
☑ COMMENTS/APPROVAL
☐ PLANNING/INFORMATION
☐ CONSTRUCTION
STAMP ALL PREVIOUS REVISION AS SUPERSEDED
ISSUED BY
NAME MKM
SIGNATURE –sd–
DATE 20 MAY 2022

JOB NO. 440
STATUS CONTRACT
DISTRIBUTION

TELANGANA STATE POWER GENERATION CO. LTD.
DESEIN PRIVATE LIMITED
PROJECT 4x270 MW BHADRADRI TPS, (FGD PACKAGE)
MANUGURU, KHAMMAM DISTRICT

BHARAT HEAVY ELECTRICALS LTD
POWER SECTOR
PROJECT ENGINEERING MANAGEMENT
NEW DELHI

DEPT CODE		NAME	SIGN	DATE
C	DRN	RCD	Sd/–	22.08.2019
	DESN	SKS	Sd/–	22.08.2019
	CHD	MKM	Sd/–	22.08.2019
	APPD	A. NARAYAN	Sd/–	22.08.2019

REV.	DATE	ALTD	CHD	APPD
01	20.05.2022	SM	RKS/MKM	AN

DRAWING REVISED IN LINE WITH ELECTRICAL INPUT
PE-DG-440-100-E008 R0

TITLE
FGD CONTROL BUILDING
ARCHITECTURAL PLANS

DEPT. SCALE
SIGN
DATE
DRAWING NO. PE-DG-440-693-C001
SHEET 1 OF 1 REV. 01

FORMAT SIZE A0

COPY RIGHT AND CONFIDENTIAL
The information on this document belongs to BHARAT HEAVY ELECTRICALS LIMITED
It must not be used directly or indirectly in any way detrimental to the interest of the company.

COPY RIGHT AND CONFIDENTIAL
The information on this document is the property of BHARAT HEAVY ELECTRICALS LIMITED
It must not be used directly or indirectly in any way detrimental to the interest of the company.

DRAWING NO. PE-DG-440-693-C002

FIRST ANGLE PROJECTION | ALL DIMENSIONS ARE IN MM | DO NOT SCALE THIS DRAWING

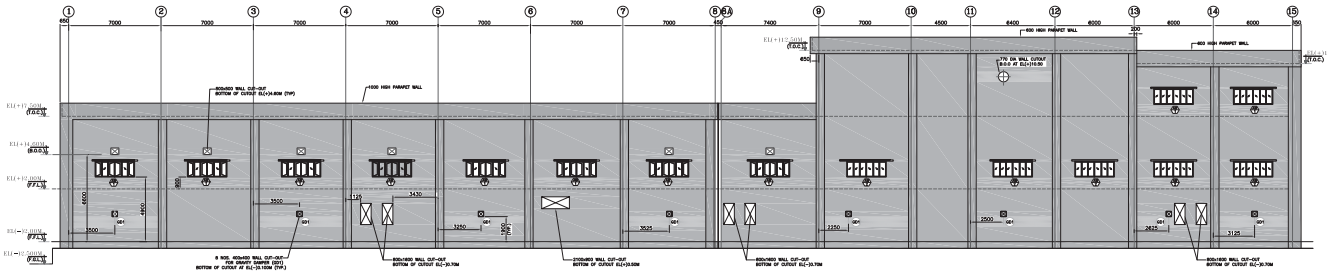

ELEVATION ON GRID 'A'

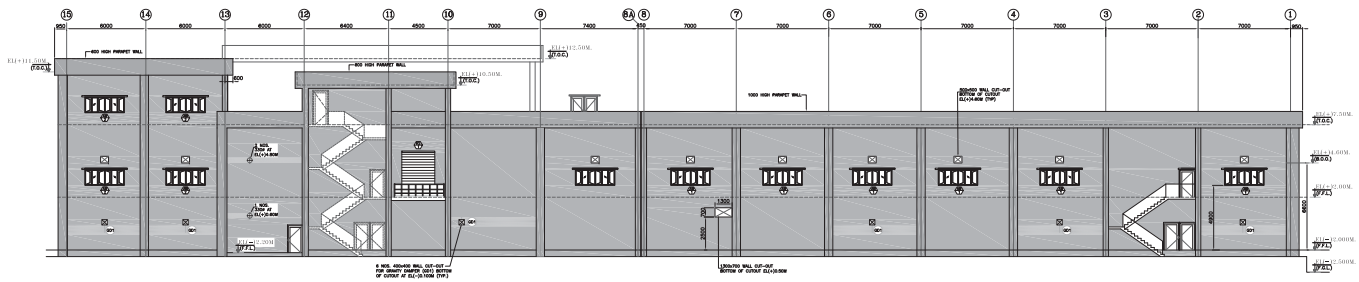

ELEVATION ON GRID 'B'

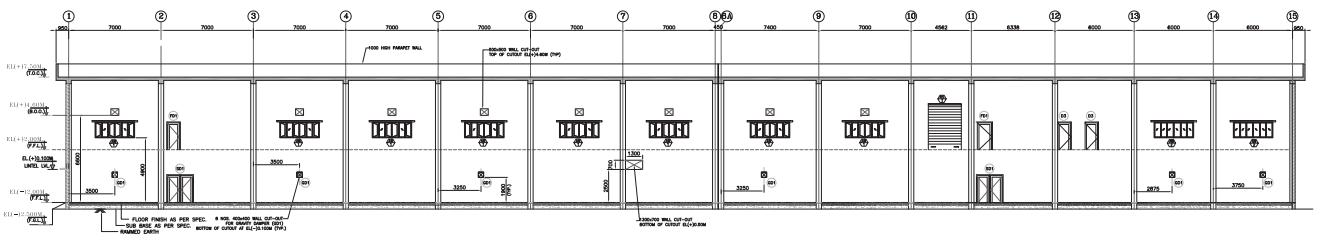

SECTION 1-1

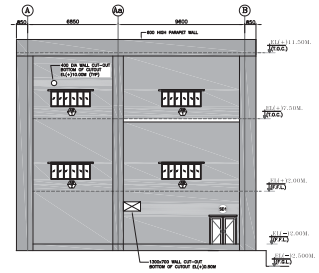

ELEVATION ALONG GRID 15

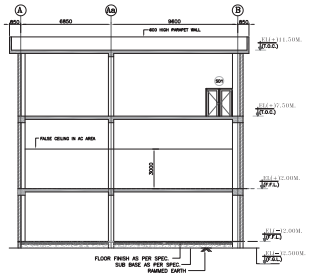

SECTION 2-2

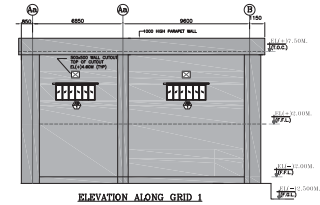

ELEVATION ALONG GRID 1

NOTES :

1. THIS DRAWING SHALL BE READ IN CONJUNCTION WITH TECHNICAL SPECIFICATION.
2. ALL DIMENSIONS ARE IN MM. AND LEVELS ARE IN M. UNLESS NOTED OTHERWISE.
3. ELEVATIONS 0.00M CORRESPONDS TO RL. 69.5M WHICH IS THE FINISHED FLOOR LEVEL OF POWER HOUSE BUILDING.
4. FOR OTHER GENERAL ARCHITECTURAL NOTES REFER DRAWING NO. PE-DG-440-600-C003.
5. UNLESS NOTED OTHERWISE WINDOW / DOOR/ ROLLING SHUTTER LOCATION SHALL BE AT CENTER BETWEEN GRIDS.
6. DISCREPANCY IF ANY SHOULD BE BROUGHT TO THE NOTICE OF ENGR-IN-CHARGE BEFORE EXECUTION OF WORK.

REFERENCE DRAWINGS:-

1. PLOT PLAN----------PE-DG-411-100-M001
2. ELECTRICAL EQUIPMENT & CABLING LAYOUT IN FGD CONTROL ROOM --------PE-DG-440-100-E008
3. FGD CONTROL ROOM ARCH. PLAN AND DETAILS-----PE-DG-440-693-C001
4. FGD CONTROL ROOM - GA & RC DETAIL OF STAIRCASE-1----PE-DG-440-693-C008
5. FGD CONTROL ROOM - GA & RC DETAIL OF STAIRCASE-2----PE-DG-440-693-C009
5. FGD CONTROL ROOM - TOILET DETAIL----------PE-DG-440-693-C003

BHEL-PROJECT ENGINEERING MANAGEMENT(CIVIL)
THIS DRAWING MARKED(✓) IS RELEASED FOR
☑ COMMENTS/APPROVAL
☐ PLANNING/INFORMATION
☐ CONSTRUCTION
STAMP ALL PREVIOUS REVISION AS SUPERSEDED

	ISSUED BY
NAME	MRM
SIGNATURE	-sd/-
DATE	20 MAY 2022

THIS DRAWING SHALL BE READ IN CONJUNCTION WITH DRG NO PE-DG-440-693-C001

LEGEND.
TYP - TYPICAL
EL - ELEVATION
THK - THICKNESS
FFL - FLOOR FINISH LEVEL
T.O.C. - TOP OF CONCRETE
T.O.P. - TOP OF PARAPET
FGL - FLOOR GROUND LEVEL
LVL - LEVEL
EL - ELEVATION

NOTE: Scale 1:50 only if printed on A3 size as shown in drawing

PRINT SCALE IN METRE 0.0 0.5 1.0 2.0 3.0 4.0 5.0

REV.	DATE	ALTD	CHD	APPD
01	20.05.2022	SM	RSC/MM	AK

DRAWING REVISED IN LINE WITH ELECTRICAL INPUT PE-DG-440-100-E008 R0

JOB NO. 440

STATUS: CONTRACT

DISTRIBUTION

TELANGANA STATE POWER GENERATION CO. LTD.

DESEIN PRIVATE LIMITED

PROJECT: 4x270 MW BHADRADRI TPS, (FGD PACKAGE) MANUGURU, KHAMMAM DISTRICT

BHARAT HEAVY ELECTRICALS LTD
POWER SECTOR
PROJECT ENGINEERING MANAGEMENT
NEW DELHI

DEPT CODE		NAME	SIGN	DATE
C	DRN	RKD	Sd/-	22.06.2019
	DESN	SKS	Sd/-	22.06.2019
	CHD	MRM	Sd/-	22.06.2019
	APPD	A. NARAYAN	Sd/-	22.06.2019

TITLE: FGD CONTROL BUILDING
ARCHITECTURAL ELEVATIONS & SECTIONS

DEPT. | SCALE | DRAWING NO. PE-DG-440-693-C002
SIGN
DATE | SHEET 1 OF 1 | REV. 01

FORMAT SIZE A0

FIRST ANGLE PRJECTION

ALL DIMENSIONS ARE IN MM

DRAWING NO. PE-DG-440-696-C001

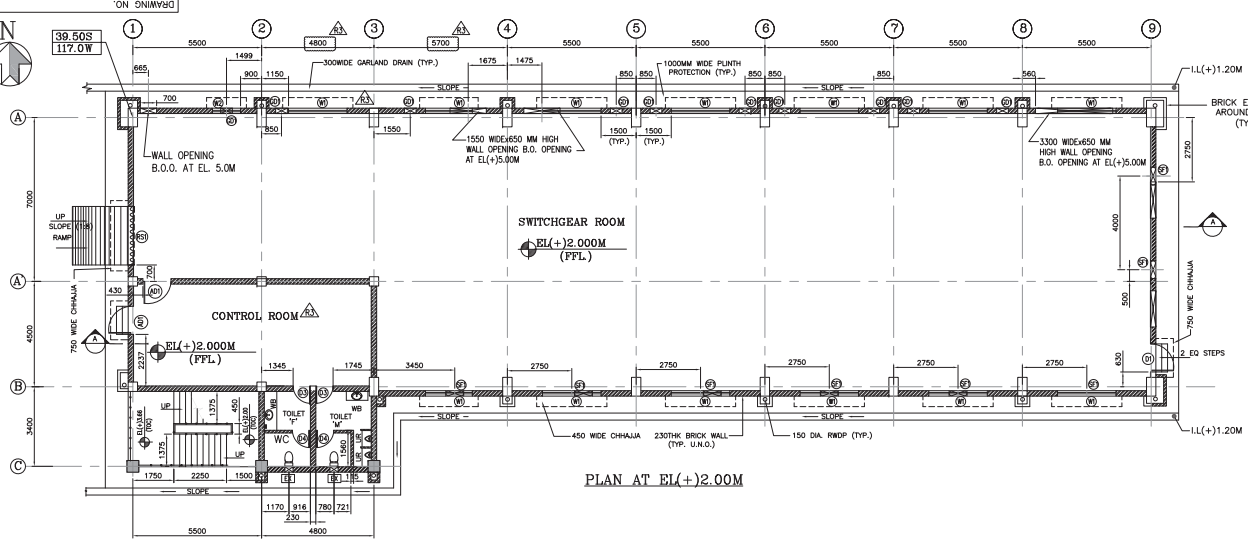

PLAN AT EL(+)2.00M

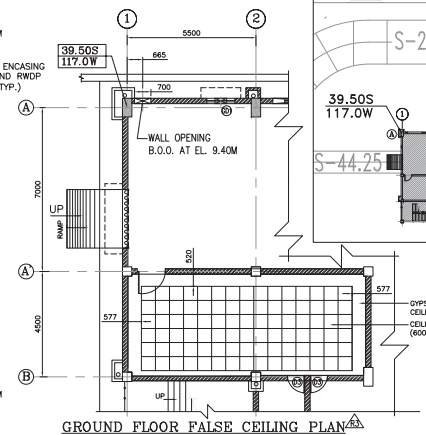

GROUND FLOOR FALSE CEILING PLAN
(FALSE CEILING HEIGHT 3.0 M FROM FFL)

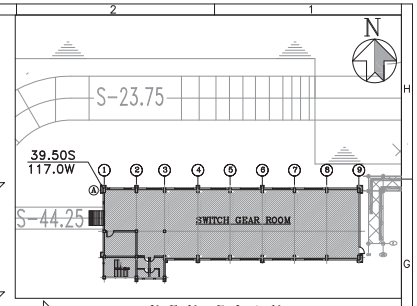

KEY PLAN

SCHEDULE OF EXTERNAL FINISHES

RWP	150mm ø G I RAIN WATER PIPE(TYP)
EXTERIOR PLASTERING	IN TWO LAYERS 1st LAYERS 12MM THK. IN 1:4 CEMENT & 2nd LAYERS 8MM THK. IN 1:3 CEMENT
INTERIOR PLASTERING	12MM WITH 1:4 CEMENT SAND MORTAR
CEILING FINISHING	2MM WHITE CEMENT PUTTY
EXTERIOR FINISHING	EXTERNAL QUALITY ACRYLIC EMULSION PAINT.

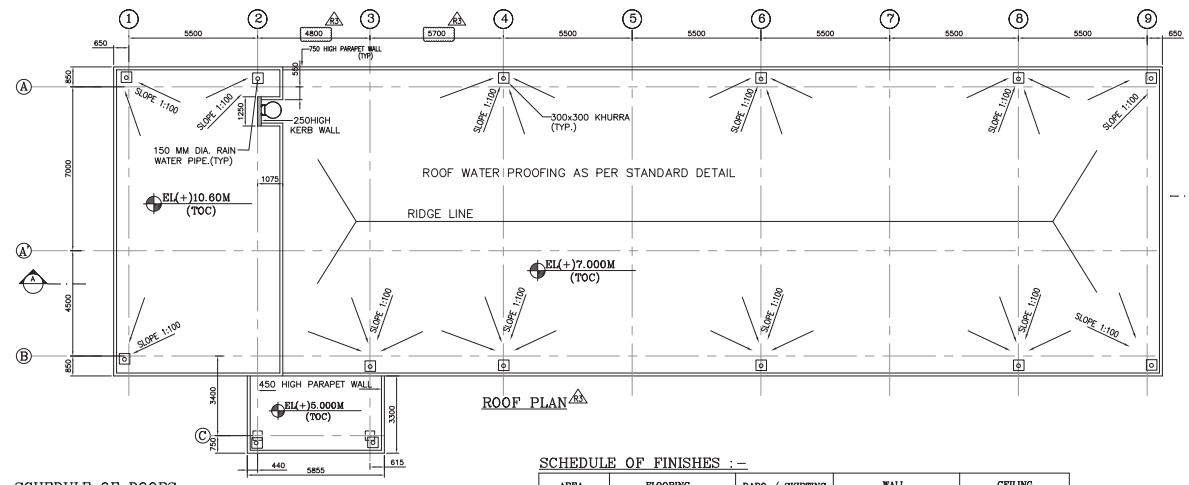

ROOF PLAN

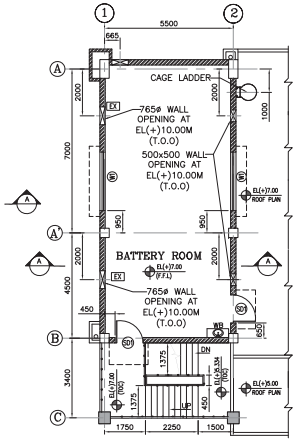

FLOOR PLAN AT EL(+)7.00M

NOTES :

1. THIS DRAWING SHALL BE READ IN CONJUNCTION WITH TECHNICAL SPECIFICATION.
2. ALL DIMENSIONS ARE IN MM. AND LEVELS ARE IN M. UNLESS NOTED OTHERWISE.
3. ELEVATIONS 0.00M CORRESPONDS TO RL. 69.5M WHICH IS THE FINISHED FLOOR LEVEL OF POWER HOUSE BUILDING.
4. FOR OTHER GENERAL ARCHITECTURAL NOTES REFER DRAWING NO. PE-DG-440-600-C003.
5. UNLESS NOTED OTHERWISE WINDOW / DOOR/ ROLLING SHUTTER LOCATION SHALL BE AT CENTER BETWEEN GRIDS.
6. DISCREPANCY IF ANY SHOULD BE BROUGHT TO THE NOTICE OF ENGR-IN-CHARGE BEFORE EXECUTION.

REFERENCE DRAWINGS:-

1. PLOT PLAN----------PE-DG-411-100-M001
2. SP BUSDUCT & FGD SWITCHGEAR ROOM LAYOUT------PE-DG-440-100-E009
3. ELECTRICAL SWITCHGEAR ROOM ARCH. ELEVATION AND SECTION---PE-DG-440-696-C002

SCHEDULE OF DOORS

DESIGNATION	SIZE	DESCRIPTION
RS1	2500x3500	ROLLING SHUTTER AS PER SPECIFICATION
AD1	1200x2500	SINGLE SHUTTER ALUMINUM DOOR
SD1	1200x2500	SINGLE SHUTTER STEEL DOOR
D3	900x2100	SINGLE SHUTTER WOODEN PANEL DOOR WITH HARD WOOD FRAME.
D4	750x2100	SINGLE SHUTTER SOLID CORE PVC DOOR WITH PVC FRAME

SCHEDULE OF WINDOWS & VENTILATORS

W1	2500x1500	ALUMINUM GLAZED WINDOW PARTLY OPENABLE & PARTLY FIXED-WITH 4mm THICK CLEAR FLOAT GLASS.
W2	1200x1500	ALUMINUM GLAZED WINDOW FIXED-WITH 4mm THICK CLEAR FLOAT GLASS.
W3	2500x1500	ALUMINUM GLAZED WINDOW FIXED-WITH 4mm THICK CLEAR FLOAT GLASS.
SP1	765 DIA.	AIR SUPPLY FAN
GD1	500 X 500	GRAVITY DAMPER

SCHEDULE OF FINISHES :-

AREA	FLOORING	DADO / SKIRTING	WALL	CEILING
SWITCHGEAR ROOM	50 MM THICK HEAVY DUTY IPS CEMENT CONCRETE FLOOR WITH METALLIC HARDENER. FLEXIBLE ELECTRIC INSULATED PVC SYNTHETIC SHEET FINISH OVER IPS.	CEMENT CONCRETE SKIRTING 150 HIGH	SYNTHETIC ENAMEL PAINT UP TO 1.50MTS HEIGHT AND ACRYLIC EMULSION PAINT OVER WHITE CEMENT PUTTY FOR BALANCE HEIGHT	ACRYLIC DISTEMPER PAINT
CONTROL ROOM	10 MM THICK NON-SKID FULLY VITRIFIED TILES OF (MINIMUM SIZE 600 MM X 600 MM.	CEMENT CONCRETE SKIRTING 150 HIGH	ACRYLIC EMULSION PAINT OVER WHITE CEMENT PUTTY.	PRE-COATED ALUMINUM PANELED (600MMX600MM SIZE) CEILING
BATTERY ROOM	MINIMUM 20mm THK. ACID AND ALKALI RESISTANT VITRIFIED TILES.	20mm THK. ACID RESISTANT TILES OVER BITUMEN PRIMER UPTO 1.20M HEIGHT.	ACID/ALKALI EPOXY PAINT FOR BALANCE HEIGHT.	ACRYLIC DISTEMPER PAINT
TOILET AREA	10mm THK. ANTI SKID VITRIFIED TILES (400mmX400mm SIZE)	5 mm THICK GLAZED CERAMIC TILES UP TO 2100mm	FOR BALANCE ACRYLIC EMULSION PAINT WITH WHITE CEMENT PUTTY	ACRYLIC DISTEMPER PAINT

LEGEND.

WC – INDIAN WATER CLOSET
WB – WASH BASIN
UR – URINAL
TYP – TYPICAL
EL – ELEVATION
THK – THICKNESS
FFL – FLOOR FINISH LEVEL
B.O.L. – BOTTOM OF LINTEL
T.O.C. – TOP OF CONCRETE
T.O.P. – TOP OF PARAPET
FGL. – FLOOR GROUND LEVEL
LVL. – LEVEL
EL – ELEVATION
T.O.O. – TOP OF OPENING

NOTE- Scan QR code for checking the latest rev. status of drawing.

BHEL-PROJECT ENGINEERING MANAGEMENT(CIVIL)	
THIS DRAWING MARKED(✓) IS RELEASED FOR	
☑ COMMENTS/APPROVAL	
☐ PLANNING/INFORMATION	
☐ CONSTRUCTION	
STAMP ALL PREVIOUS REVISION AS SUPERSEDED	
ISSUED BY	
NAME	MKM
SIGNATURE	-sd-
DATE	04.04.2022

JOB NO. 440

STATUS CONTRACT

DISTRIBUTION

PRINT SCALE IN METRE 0 2 4 6 8 10 20 30 40 50

CUSTOMER
TELANGANA STATE POWER GENERATION CORPORATION LTD.
HYDERABAD

CONSULTANT
DESEIN PRIVATE LIMITED

PROJECT 4 x 270 MW BHADRADRI TPS (FGD PACKAGE)
AT MANUGURU, KHAMMAM DISTRICT, TELANGANA

BHARAT HEAVY ELECTRICALS LTD
POWER SECTOR
PROJECT ENGINEERING MANAGEMENT
NOIDA (U.P.)

DEPT CODE		NAME	SIGN	DATE
C	DRN	AKD	-sd-	07.02.2019
	DESN	KKS	-sd-	07.02.2019
	CHD	MKM	-sd-	07.02.2019
	APPD	AN	-sd-	07.02.2019

TITLE
ELECTRICAL SWITCHGEAR ROOM
ARCHITECTURAL PLAN

CIVIL	ELEC	C&I	MSE	MAX	DEPT.	SCALE –	DRAWING NO.
					SIGN		PE-DG-440-696-C001
					DATE		SHEET - 1 OF 1 REV. 3

REV.	DATE	ALTD	CHD	APPD	REV.	DATE	ALTD	CHD	APPD	REV.	DATE	ALTD	CHD	APPD	REV.	DATE	ALTD	CHD	APPD	REV.	DATE	ALTD	CHD	APPD	REV.	DATE	ALTD	CHD	APPD	REV.	DATE	ALTD	CHD	APPD	REV.	DATE	ALTD	CHD	APPD
																				03	04.04.22	RB	KKS/MKM	AN	02	24.08.20	AKD	KKS/MKM	AN	01	26.12.19	AKD	KKS/MKM	AN
																					DRAWING REVISED IN LINE WITH REVISED ELECTRICAL INPUT I.E. REVISION OF CONTROL ROOM INTERNAL LAYOUT. CHANGES MARKED AS 03				GENERALLY REVISED AS PER REVISED INPUT AND CHANGES MKD. AS 02					GENERALLY REVISED AS PER REVISED INPUT AND CHANGES MKD. AS 01			

FORMAT SIZE A1

The information on this document is the property of BHARAT HEAVY ELECTRICALS LIMITED. COPY RIGHT AND CONFIDENTIAL. It must not be used directly or indirectly in any way detrimental to the interest of the company.

FIRST ANGLE PRJECTION

ALL DIMENSIONS ARE IN MM

DRAWING NO. PE-DG-440-696-C002

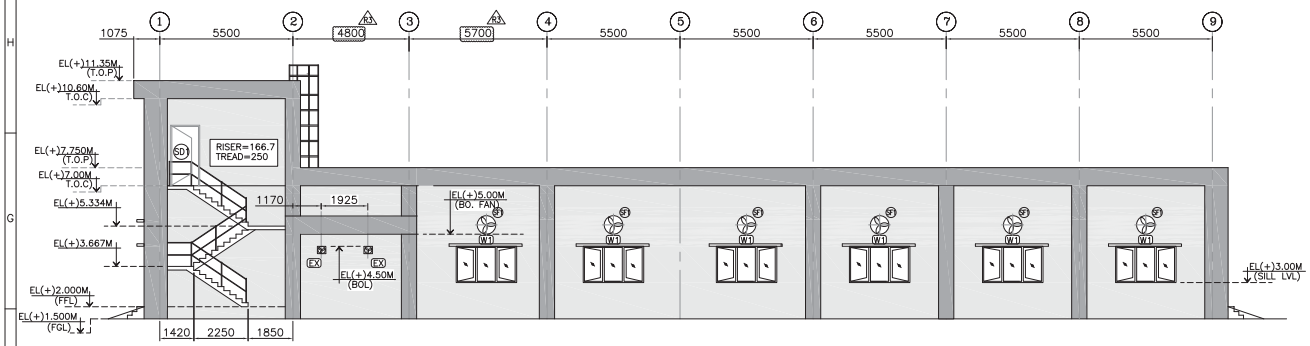

ELEVATION ALONG GRID–B

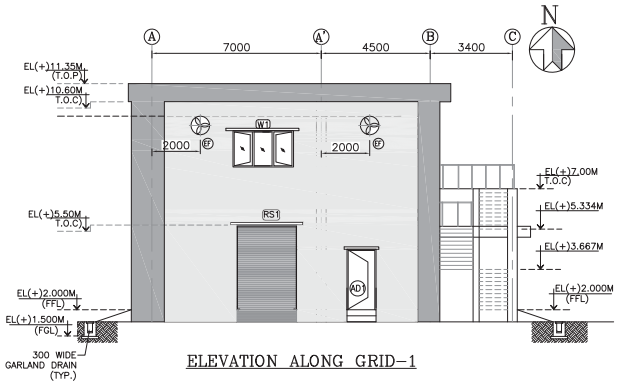

ELEVATION ALONG GRID–1

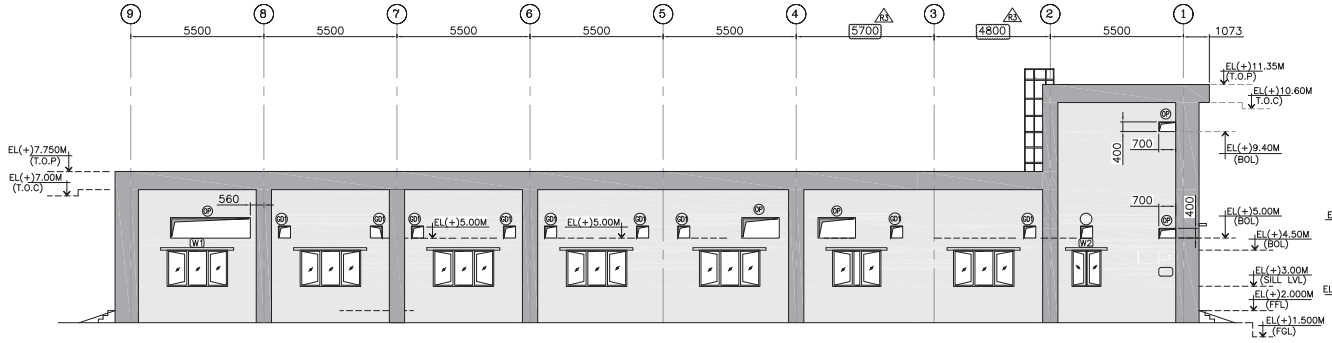

ELEVATION ALONG GRID–A

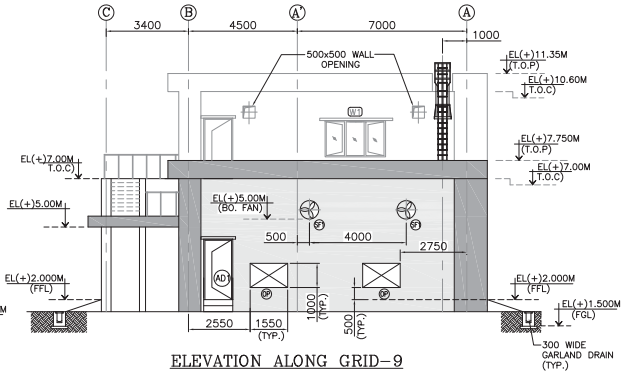

ELEVATION ALONG GRID–9

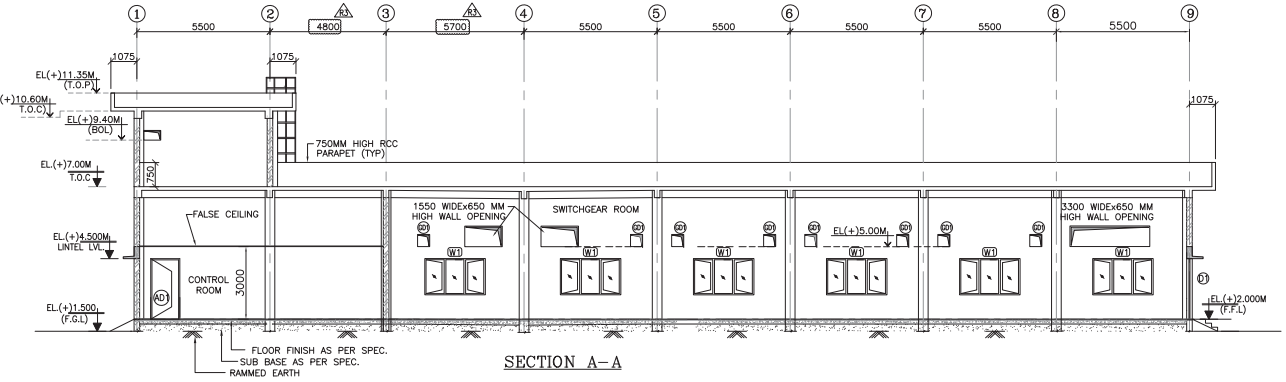

SECTION A–A

NOTES :

1. THIS DRAWING SHALL BE READ IN CONJUNCTION WITH TECHNICAL SPECIFICATION.
2. ALL DIMENSIONS ARE IN MM. AND LEVELS ARE IN M. UNLESS NOTED OTHERWISE.
3. ELEVATIONS 0.00M CORRESPONDS TO RL. 69.5M WHICH IS THE FINISHED FLOOR LEVEL OF POWER HOUSE BUILDING.
4. FOR OTHER GENERAL ARCHITECTURAL NOTES REFER DRAWING NO. PE–DG–440–600–C003.
5. UNLESS NOTED OTHERWISE WINDOW / DOOR/ ROLLING SHUTTER LOCATION SHALL BE AT CENTER BETWEEN GRIDS.
6. DISCREPANCY IF ANY SHOULD BE BROUGHT TO THE NOTICE OF ENGR–IN–CHARGE BEFORE EXECUTION.

REFERENCE DRAWINGS: –

1. PLOT PLAN----------PE–DG–411–100–M001
2. SP BUSDUCT & FGD SWITCHGEAR ROOM LAYOUT-------PE–DG–440–100–E009
3. ELECTRICAL SWITCHGEAR ROOM–ARCHITECTURAL PLAN-------PE–DG–440–696–C001

NOTE– Scan QR code for checking the latest rev. status of drawing.

LEGEND.

TYP – TYPICAL
EL – ELEVATION
THK – THICKNESS
FFL – FLOOR FINISH LEVEL
B.O.L – BOTTOM OF LINTEL
T.O.C. – TOP OF CONCRETE
T.O.P. – TOP OF PARAPET
FGL. – FLOOR GROUND LEVEL
LVL. – LEVEL
EL. – ELEVATION
EF. – EXHAUST FAN
OP – WALL OPENING

BHEL–PROJECT ENGINEERING MANAGEMENT(CIVIL)
THIS DRAWING MARKED(✓) IS RELEASED FOR
☑ COMMENTS/APPROVAL
☐ PLANNING/INFORMATION
☐ CONSTRUCTION

STAMP ALL PREVIOUS REVISION AS SUPERSEDED	
ISSUED BY	
NAME	MKM
SIGNATURE	–sd–
DATE	04.04.22

JOB NO. 440	CUSTOMER TELANGANA STATE POWER GENERATION CORPORATION LTD. HYDERABAD
STATUS CONTRACT	CONSULTANT DESEIN PRIVATE LIMITED
DISTRIBUTION	PROJECT 4 x 270 MW BHADRADRI TPS (FGD PACKAGE) AT MANUGURU, KHAMMAM DISTRICT, TELANGANA
PRINT SCALE IN METRE 0 2 4 6 8 10 20 30 40 50	BHARAT HEAVY ELECTRICALS LTD POWER SECTOR PROJECT ENGINEERING MANAGEMENT NOIDA (U.P.)

DEPT CODE		NAME	SIGN	DATE
C	DRN	AKD	–sd–	07.02.2019
	DESN	KKS	–sd–	07.02.2019
	CHD	MKM	–sd–	07.02.2019
	APPD	AN	–sd–	07.02.2019

TITLE ELECTRICAL SWITCHGEAR ROOM ARCHITECTURAL ELEVATION AND SECTION

CIVIL	ELEC	C&I	MSE	MAX	DEPT. SIGN DATE	SCALE –

DRAWING NO. PE–DG–440–696–C002 REV. 3

SHEET – 1 OF 1

FORMAT SIZE A1

REV.	DATE	ALTD	CHD	APPD	REV.	DATE	ALTD	CHD	APPD	REV.	DATE	ALTD	CHD	APPD	REV.	DATE	ALTD	CHD	APPD	REV.	DATE	ALTD	CHD	APPD	REV.	DATE	ALTD	CHD	APPD	REV.	DATE	ALTD	CHD	APPD
																				03	04.04.22	RB	KKS/MKM	AN	02	24.08.20	AKD	KKS/MKM	AN	01	26.12.19	AKD	KKS/MKM	AN
																				DRAWING REVISED IN LINE WITH REVISED ELECTRICAL INPUT I.E. REVISION OF CONTROL ROOM INTERNAL LAYOUT. CHANGES MARKED AS R3					GENERALLY REVISED AS PER REVISED INPUT AS MKD. R2				GENERALLY REVISED AS PER REVISED INPUT AS MKD. R1				

COPY RIGHT AND CONFIDENTIAL
BHARAT HEAVY ELECTRICALS LIMITED
The information on this document is the property of BHARAT HEAVY ELECTRICALS LIMITED
It must not be used directly or indirectly in any way detrimental to the interest of the company.

FIRST ANGLE PROJECTION

(ALL DIMENSIONS ARE IN mm)

DRG. NO. PY-DA-1-M113-1252-02 SHT. 1 OF 1

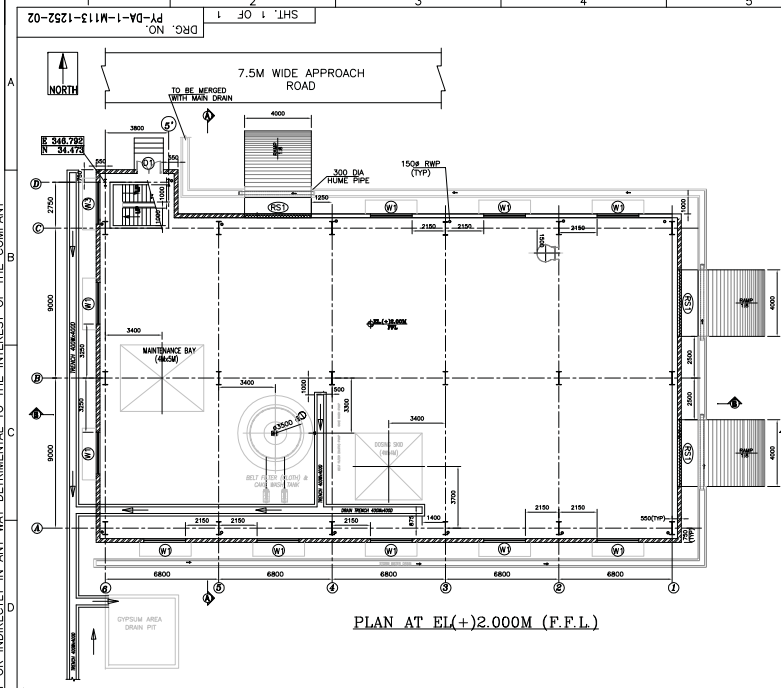

PLAN AT EL(+)2.000M (F.F.L.)

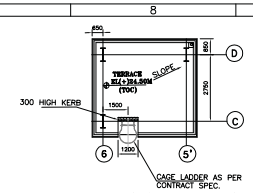

PLAN AT EL(+)24.500M (T.O.C.)

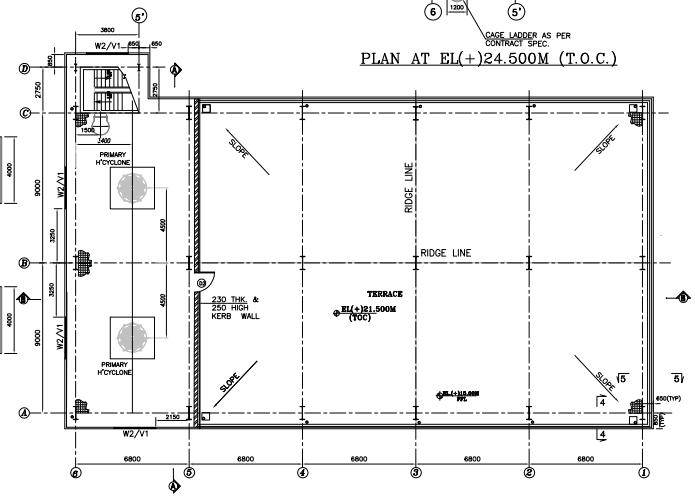

PLAN AT EL(+)21.500M (F.F.L.)

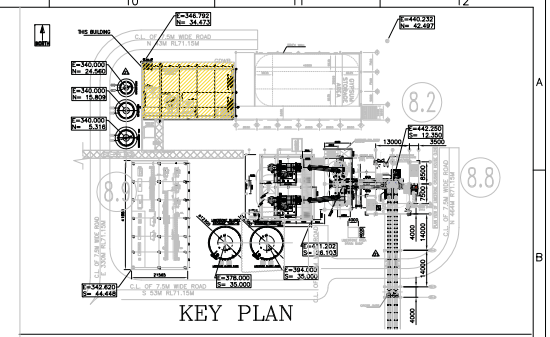

KEY PLAN

LEGENDS:

EL	–	ELEVATION	TOP	–	TOP OF PARAPET
THK	–	THICKNESS	RWP	–	RAIN WATER PIPE 150DIA AS PER TECH SPEC.
B.O.B.P	–	BOTTOM OF BASE PLATE		–	230 THK. FLY ASH BRICK WALL
TYP	–	TYPICAL		–	50 MM THK. HEAVY DUTY CEMENT CONCRETE WITH METALLIC HARDENER TOPPING OVER METAL SHEETING
TOC	–	TOP OF CONCRETE			
FGL	–	FINISHED GROUND LEVEL			
BOF	–	BOTTOM OF FOOTING			
B/W	–	BOTHWAYS			
T&B	–	TOP & BOTTOM			
FFL	–	FINISHED FLOOR LEVEL			
TOS	–	TOP OF STEEL			
B.O.BEAM	–	BOTTOM OF BEAM			
TOBW	–	TOP OF BRICK WORK			

REFERENCE DWGS:

1. PY-LQ-0-M111-2001-01 -PLOT PLAN
2. PYLEOM113204301-R01-GDW BUILDING LAYOUT.
3. PE-DG-440-600-C001-R02-STANDARD DETAILS OF RCC WORKS
4. PE-DG-440-600-C003-STANDARD DETAILS OF ARCHITECTURAL WORKS
5. PE-DG-411-603-C001 R1- SITE LEVELING & GRADING
6. IS-3-GA-719-101-M049-GA OF GYPSUM STORAGE SHED
7. PYDG1M113125201-GDW SUPERSTRUCTURE GA DRAWING.
8. PYDG1M113125202-GDW SUPERSTRUCTURE CLADDING & DETAILS.
9. PYDG1M113125203-GDW STAIRCASE GA DRAWING & DETAILS.

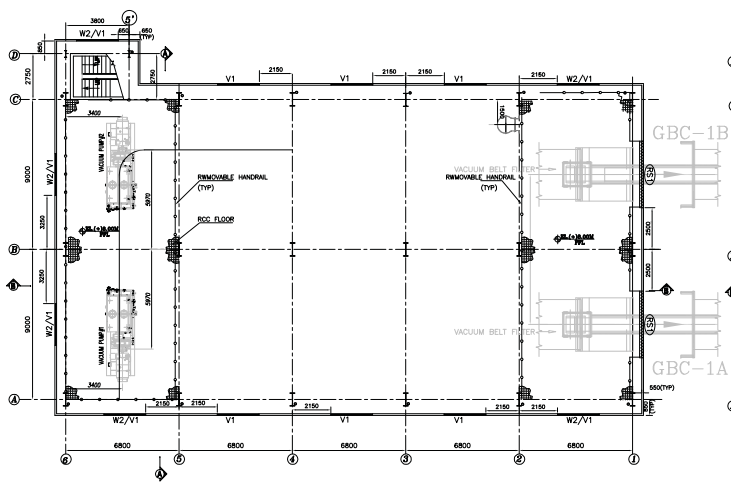

PLAN AT EL(+)8.000M (F.F.L.)

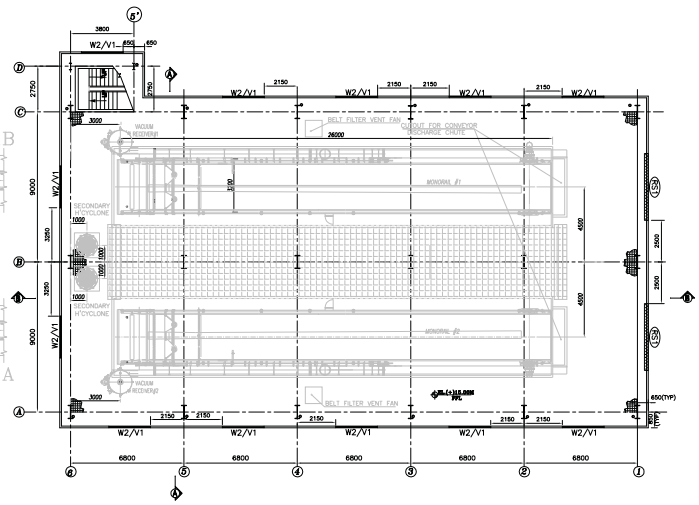

PLAN AT EL(+)15.000M (F.F.L.)

NOTES

1. THIS DRAWING SHALL BE READ IN CONJUNCTION WITH CONTRACT TERMS AND CONDITIONS, SPECIFICATIONS AND SCHEDULE OF ITEMS.
2. ALL ELEVATIONS ARE REFERRED TO THE FINISHED FLOOR LEVEL OF POWER HOUSE BUILDING AS EL(+).0.00M WHICH CORRESPONDS TO RL69.5M i.e 0.5 ABOVE F.G.L. FGL OF FGD AREA IS EL(+)1.5 WHICH CORRESPONDS TO RL 71.0M.
3. ALL DIMENSIONS ARE IN MILLIMETER AND ALL LEVELS ARE IN METER.
4. NO DIMENSIONS FROM THIS DRAWING ARE TO BE SCALED OFF AND ONLY FIGURED DIMENSIONS SHALL BE FOLLOWED.
5. CHECK ALL DIMENSIONS, COORDINATES & ELEVATIONS IMMEDIATELY, REPORT ANY DISCREPANCIES, CONFLICTS OR ERROR FOR CLARIFICATION PRIOR TO COMMENCING WORK.
6. ALL GROUND FLOOR WINDOWS SHALL BE WITH GRILLS.
7. DOOR / WINDOW/ VENTILATORS SHALL BE AT CENTERLINE OF GRID U.N.O.
8. FLOOR OPENINGS ARE TENTATIVE. SAME SHALL BE CONFORMED LATER IN-LINE WITH MECHANICAL GA(PY-LE-0-M112-8507-01)

DRAWING SHOULD BE READ IN CONJUCTION WITH DWG NO:PY-DA-1-M113-1252-02- S02 & S03.

REV.	DATE	ALTERED	REV.	DATE	ALTERED	REV.	DATE	ALTERED	REV.	DATE	ALTERED	REV.	DATE	ALTERED	REV.	DATE	ALTERED	REV.	DATE	ALTERED	REV.	DATE	ALTERED
		CHD/APPD			CHD/APPD			CHD/APPD			CHD/APPD			CHD/APPD			CHD/APPD			CHD/APPD			CHD/APPD
ZONE			ZONE			ZONE		—	ZONE			ZONE			ZONE			ZONE			ZONE		

PROJECT	BHADRADRI TPS, UNITS # 1 TO 4 (4X270 MW), MANUGURU, KHAMMAM DISTRICT (FGD PACKAGE) JOB No. 1113				
CUSTOMER	TELANGANA STATE POWER GENERATION CORPORATION LTD				
OWNER'S CONSULTANT	DESEIN PRIVATE LIMITED				
	BHARAT HEAVY ELECTRICALS LTD. PROJECT ENGINEERING AND SYSTEMS DIVISION R.C. PURAM, HYDERABAD-32		NAME	SIGN	DATE
		DRN.	KAINKUN	-SD-	24.02.2022
		CHD.	GPP	-SD-	26.02.2022
		APPD.	EC	-SD-	26.02.2022
TITLE :	GYPSUM DEWATERING BUILDING -ARCHITECTURAL DRAWING.				
UNIT :	SCALE :	BHEL DWG. NO. : PY-DA-1-M113-1252-02	SHEET NO. 01 / NO. OF SHEET 03	REV. 00	

THE INFORMATION ON THIS DOCUMENT IS THE PROPERTY OF BHARAT HEAVY ELECTRICALS LIMITED. IT MUST NOT BE USED DIRECTLY OR INDIRECTLY IN ANY WAY DETRIMENTAL TO THE INTEREST OF THE COMPANY

GENERAL DIMENSIONAL LIMITS,FITS & TOLERANCES AS PER HY0230261

FIRST ANGLE PROJECTION

(ALL DIMENSIONS ARE IN mm)

DRG. NO. PY-DA-1-M113-1252-02

SHT. 1 OF 1

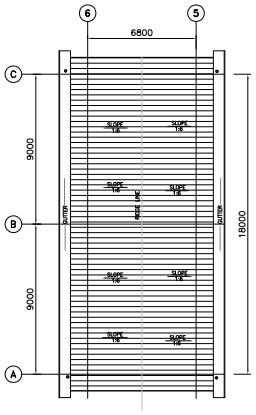

PLAN AT EL(+)28.000M

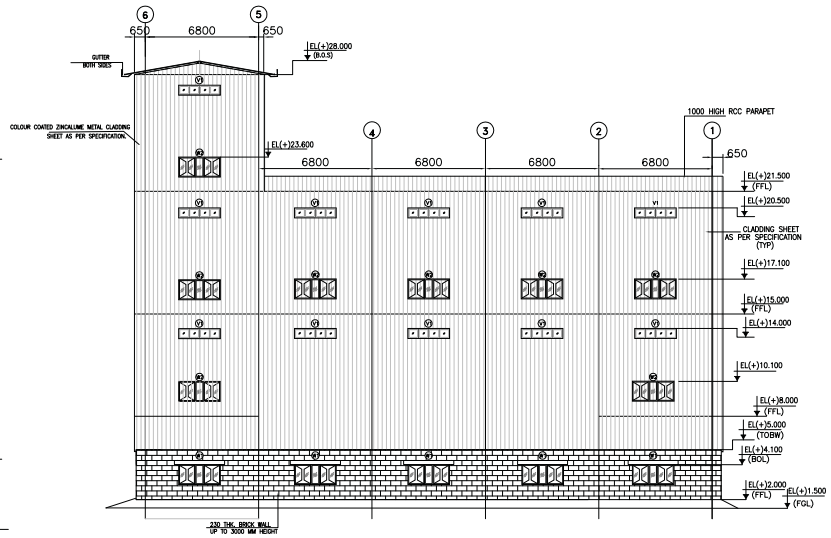

ELEVATION ALONG GRID-A
(SOUTH ELEVATION)

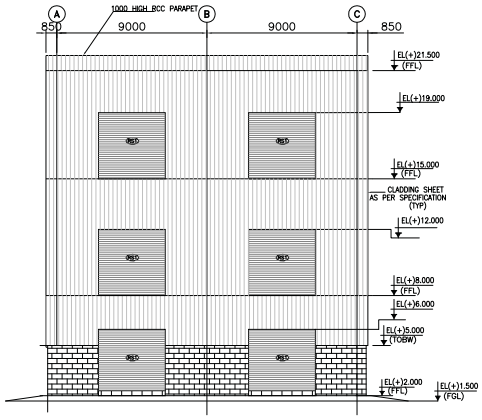

ELEVATION ALONG GRID-1
(EAST ELEVATION)

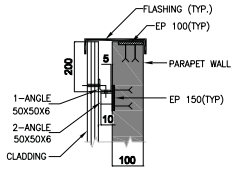

DETAIL-Y

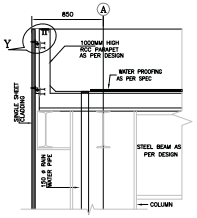

SECTION 4-4

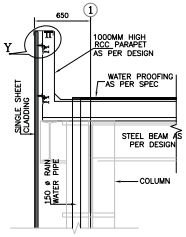

SECTION 5-5

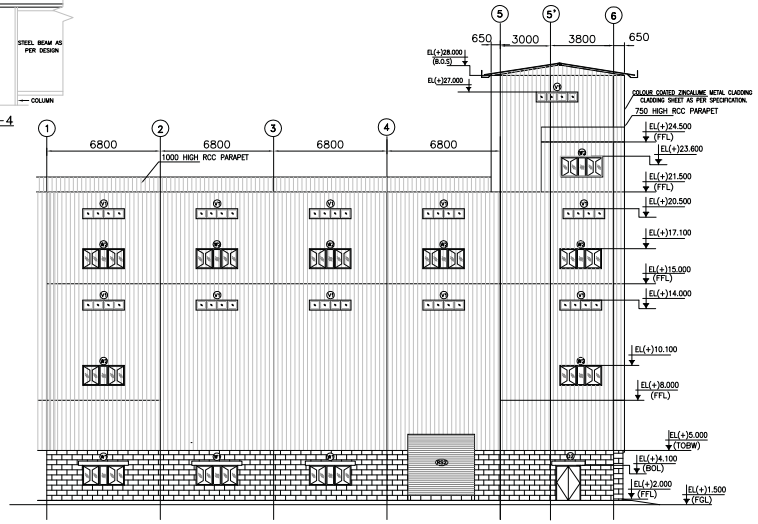

ELEVATION ALONG GRID-C & D
(NORTH ELEVATION)

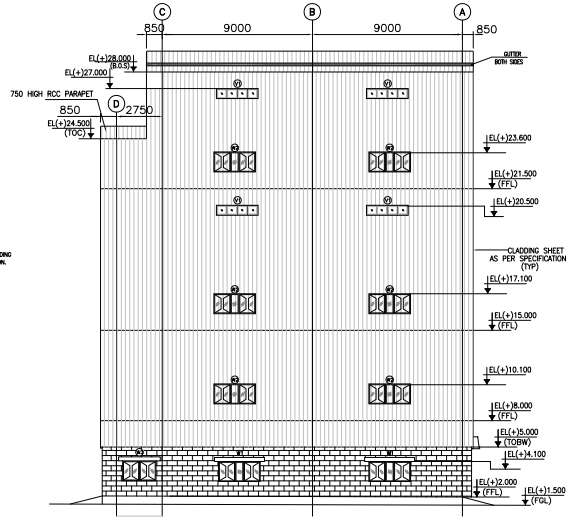

ELEVATION ALONG GRID-6
(NORTH ELEVATION)

DRAWING SHOULD BE READ IN CONJUCTION WITH DWG NO:PY-DA-1-M113-1252-02- S01& S03.

REV.	DATE	ALTERED	REV.	DATE	ALTERED	REV.	DATE	ALTERED	REV.	DATE	ALTERED	REV.	DATE	ALTERED	REV.	DATE	ALTERED	REV.	DATE	ALTERED
		CHD/APPD			CHD/APPD			CHD/APPD			CHD/APPD			CHD/APPD			CHD/APPD			CHD/APPD
ZONE			ZONE			ZONE		—	ZONE			ZONE			ZONE			ZONE		

PROJECT	BHADRADRI TPS, UNITS # 1 TO 4 (4X270 MW), MANUGURU, KHAMMAM DISTRICT(FGD PACKAGE) JOB No. 1113			
CUSTOMER	TELANGANA STATE POWER GENERATION CORPORATION LTD			
OWNER'S CONSULTANT	DESEIN PRIVATE LIMITED			
BHARAT HEAVY ELECTRICALS LTD. PROJECT ENGINEERING AND SYSTEMS DIVISION R.C. PURAM, HYDERABAD-32		NAME	SIGN	DATE
	DRN.	KAINKUN	-SD-	24.02.2022
	CHD.	GPP	-SD-	26.02.2022
	APPD.	EC	-SD-	26.02.2022
TITLE : GYPSUM DEWATERING BUILDING -ARCHITECTURAL DRAWING.				
UNIT :	SCALE :	BHEL DWG. NO. : PY-DA-1-M113-1252-02	SHEET NO. 02 / NO. OF SHEET 03	REV. 00

THE INFORMATION ON THIS DOCUMENT IS THE PROPERTY OF BHARAT HEAVY ELECTRICALS LIMITED. IT MUST NOT BE USED DIRECTLY OR INDIRECTLY IN ANY WAY DETRIMENTAL TO THE INTEREST OF THE COMPANY

GENERAL DIMENSIONAL LIMITS,FITS & TOLERANCES AS PER HY02302261

FIRST ANGLE PROJECTION

(ALL DIMENSIONS ARE IN mm)

DRG. NO. PY-DA-1-M113-1252-02 SHT. 1 OF 1

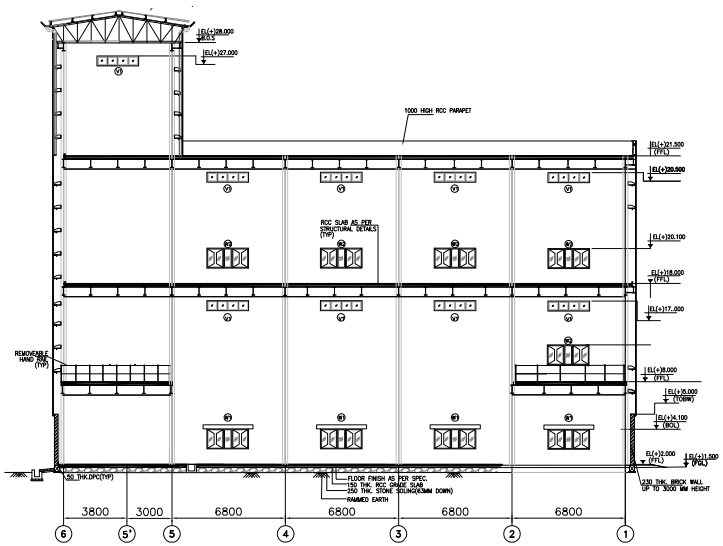

SECTION B–B

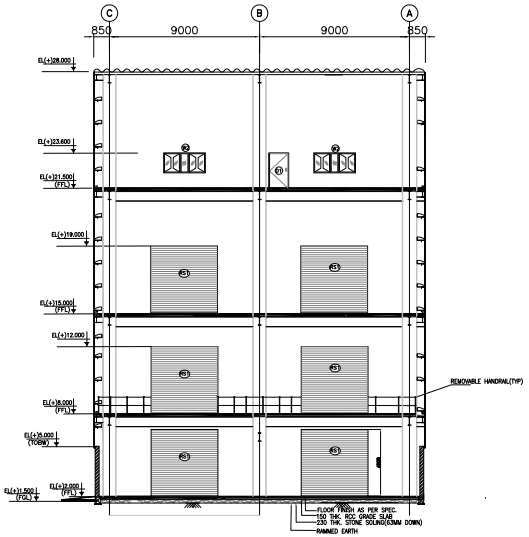

SECTION A–A

DOOR/WINDOW OPENINGS SCHEDULE

SYMBOL	MASONRY OPENING		QUANTITY	REMARKS
	WIDTH	HEIGHT		
RS1	4000	4000	07	ROLLING SHUTTER
D1	1500	2500	01	STEEL DOUBLE SHUTTER DOOR AS PER SPEC
D2	1200	2500	01	HOLLOW METAL FLUSH DOOR AS PER SPEC
W1	2500	1500	10	ANODIZED ALUMINIUM GLAZED PARTLY OPENABLE PARTLY FIXED WINDOW WITH 4MM THK. CLEAR FLOAT GLASS.
W2	2500	1500	22	ANODIZED ALUMINIUM GLAZED PARTLY OPENABLE PARTLY FIXED WINDOW WITH 6MM THK. WIRED GLASS.
W3	2000	1500	01	ANODIZED ALUMINIUM GLAZED PARTLY OPENABLE PARTLY FIXED WINDOW WITH 6MM THK. WIRED GLASS.
V1	2500	600	25	ANODIZED ALUMINIUM GLAZED VENTILATOR FIXED WITH 6MM THK. WIRED GLASS.

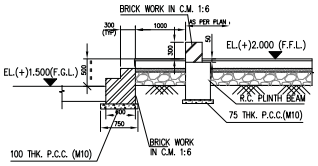

TYPICAL DETAIL OF STEPS

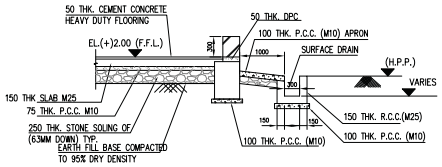

TYPICAL DETAIL OF PLINTH PROTECTION & R.C. SURFACE DRAIN

SCHEDULE OF FINISHES

AREA	FLOORING	INTERNAL WALL AND PAINTING	EXTERNAL WALL AND PAINTING
GYPSUM DEWATERING BUILDING	50 MM THK. HEAVY DUTY CEMENT CONCRETE WITH METALLIC HARDENER TOPPING	12MM THK. WITH 1:4 CEMENT SAND MORTAR ACRYLIC DISTEMPER PAINT METAL CLADDING	20MM THK. IN 2 LAYERS WITH 1:4 CEMENT SAND MORTAR OF 12MM THK. 1ST LAYER AND 1:3 CEMENT SAND MORTAR OF 8MM THK. 2ND LAYER. WATER PROOF EXTERIOR QUALITY ACRYLIC EMULSION PAINT. METAL CLADDING

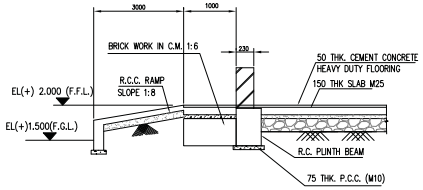

TYPICAL DETAIL OF R.C.C. RAMP

DRAWING SHOULD BE READ IN CONJUCTION WITH DWG NO:PY-DA-1-M113-1252-02- S01& S02.

PROJECT	BHADRADRI TPS, UNITS # 1 TO 4 (4X270 MW), MANUGURU, KHAMMAM DISTRICT(FGD PACKAGE) JOB No. 1113			
CUSTOMER	TELANGANA STATE POWER GENERATION CORPORATION LTD			
OWNER'S CONSULTANT	DESEIN PRIVATE LIMITED			
BHARAT HEAVY ELECTRICALS LTD. PROJECT ENGINEERING AND SYSTEMS DIVISION R.C. PURAM, HYDERABAD-32		NAME	SIGN	DATE
	DRN.	KAINKUN	-SD-	24.02.2022
	CHD.	GPP	-SD-	26.02.2022
	APPD.	EC	-SD-	26.02.2022
TITLE : GYPSUM DEWATERING BUILDING –ARCHITECTURAL DRAWING.				
UNIT :	SCALE :	BHEL DWG. NO. : PY-DA-1-M113-1252-02	SHEET NO. 03 / NO. OF SHEET 03	REV. 00

REV.	DATE	ALTERED CHD/APPD	REV.	DATE	ALTERED CHD/APPD	REV.	DATE	ALTERED CHD/APPD	REV.	DATE	ALTERED CHD/APPD	REV.	DATE	ALTERED CHD/APPD	REV.	DATE	ALTERED CHD/APPD	REV.	DATE	ALTERED CHD/APPD
ZONE			ZONE			ZONE		—	ZONE			ZONE			ZONE			ZONE		

THE INFORMATION ON THIS DOCUMENT IS THE PROPERTY OF BHARAT HEAVY ELECTRICALS LIMITED. IT MUST NOT BE USED DIRECTLY OR INDIRECTLY IN ANY WAY DETRIMENTAL TO THE INTEREST OF THE COMPANY

GENERAL DIMENSIONAL LIMITS,FITS & TOLERANCES AS PER HY02302261

FIRST ANGLE PROJECTION

(ALL DIMENSIONS ARE IN mm)

DRG. NO. PY-DA-1-M113-1252-01 SHT. OF

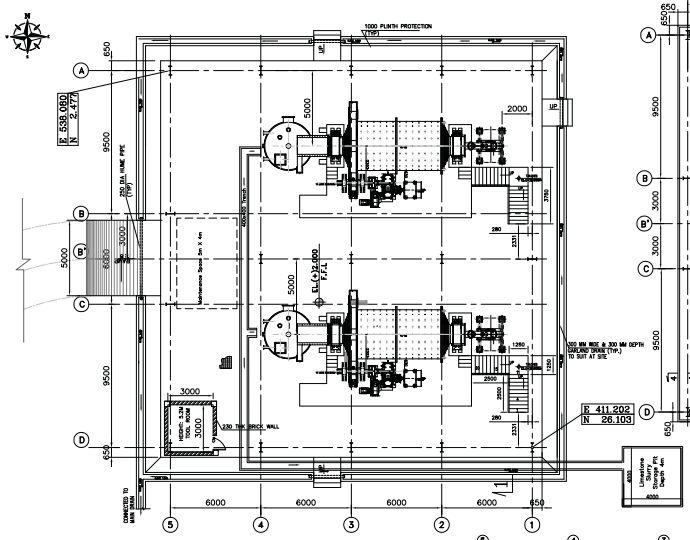

PLAN AT EL(+)2.000M (F.F.L.)

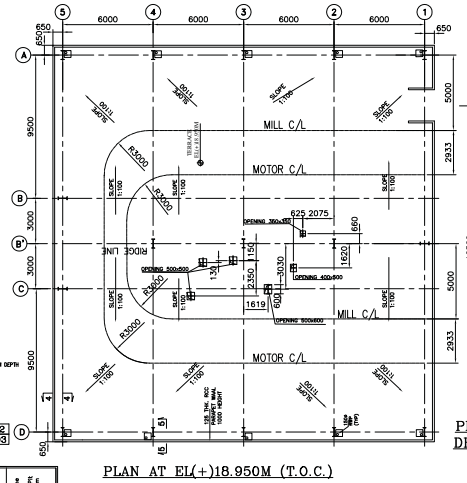

PLAN AT EL(+)18.950M (T.O.C.)

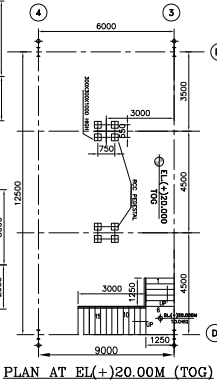

PLAN AT EL(+)20.00M (TOG)
DET. FOR DISTRIBUTION BOX
(SCALE : NTS)

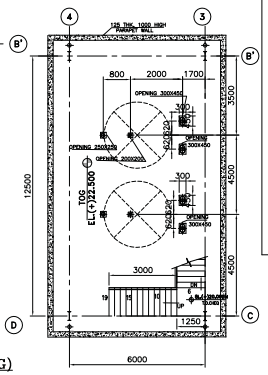

PLAN AT EL(+)22.5M (TOG)
HYDRO CYCLONE
(SCALE : NTS)

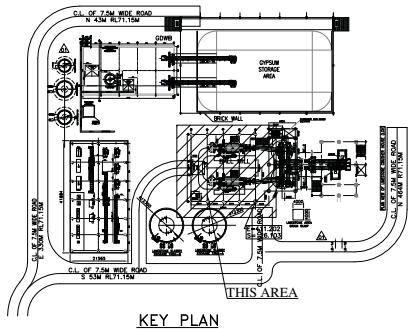

KEY PLAN

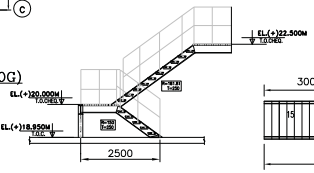

SECTION VIEW MKD C-C

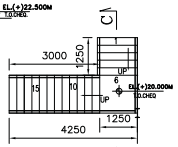

PLAN AT EL(+)18.950M TO (+)22.50M

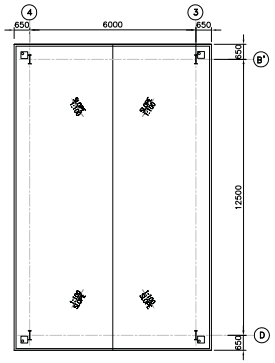

ROOF PLAN AT EL. 28.50M

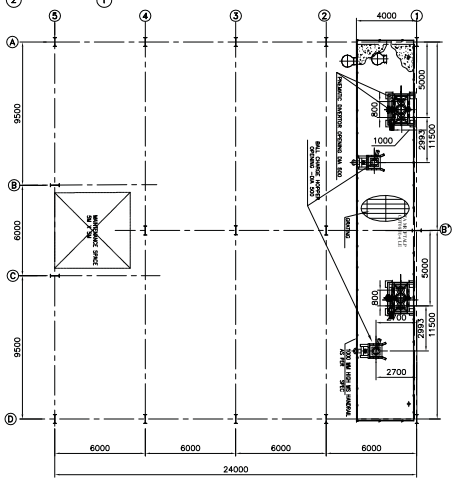

PLAN AT EL(+)10.80M (TOG)

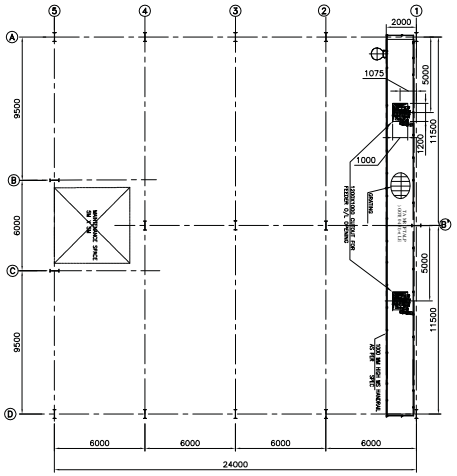

PLAN AT EL(+)13.40M (TOG)

DRAWING SHOULD BE READ IN CONJUCTION WITH DWG NO:PY-DA-1-M162-1252-01- S02 & S03

NOTES

1. THIS DRAWING SHALL BE READ IN CONJUNCTION WITH CONTRACT TERMS AND CONDITIONS, SPECIFICATIONS AND SCHEDULE OF ITEMS.
2. ALL ELEVATIONS ARE REFERRED TO THE FINISHED FLOOR LEVEL OF POWER HOUSE BUILDING AS EL(+).0.00M WHICH CORRESPONDS TO RL69.5M i.e 0.5 ABOVE F.G.L. FGL OF FGD AREA IS EL(+)1.5 WHICH CORRESPONDS TO RL 71.0M.
3. ALL DIMENSIONS ARE IN MILLIMETER AND ALL LEVELS ARE IN METER.
4. NO DIMENSIONS FROM THIS DRAWING ARE TO BE SCALED OFF AND ONLY FIGURED DIMENSIONS SHALL BE FOLLOWED.
5. CHECK ALL DIMENSIONS, COORDINATES & ELEVATIONS IMMEDIATELY, REPORT ANY DISCREPANCIES, CONFLICTS OR ERROR FOR CLARIFICATION PRIOR TO COMMENCING WORK.
6. ALL GROUND FLOOR WINDOWS SHALL BE WITH GRILLS.
7. DOOR / WINDOW/ VENTILATORS SHALL BE AT CENTERLINE OF GRID U.N.O.
8. FLOOR OPENINGS ARE TENTATIVE. SAME SHALL BE CONFORMED LATER IN-LINE WITH MECHANICAL GA

LEGENDS:

EL	–	ELEVATION	TOP	–	TOP OF PARAPET
THK	–	THICKNESS	RWP	–	RAIN WATER PIPE 150DIA AS PER TECH SPEC.
B.O.B.P	–	BOTTOM OF BASE PLATE		–	230 THK. FLY ASH BRICK WALL
TYP	–	TYPICAL		–	50 MM THK. HEAVY DUTY CEMENT CONCRETE WITH METALLIC HARDENER TOPPING OVER METAL SHEETING
TOC	–	TOP OF CONCRETE			
FGL	–	FINISHED GROUND LEVEL			
BOF	–	BOTTOM OF FOOTING			
B/W	–	BOTHWAYS			
T&B	–	TOP & BOTTOM			
FFL	–	FINISHED FLOOR LEVEL			
TOS	–	TOP OF STEEL			
B.O.BEAM	–	BOTTOM OF BEAM			
TOBW	–	TOP OF BRICK WORK			
TOG	–	TOP OF GRATING			

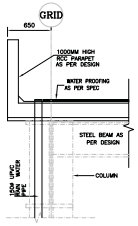

SECTION 5-5

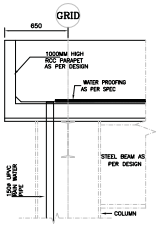

SECTION 4-4

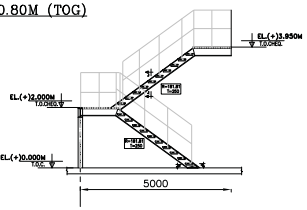

SECTION VIEW MKD B-B

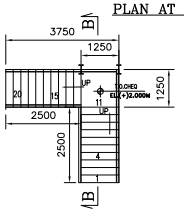

PLAN AT EL.(+)0.00M TO (+)3.95M

REV.	DATE	ALTERED	REV.	DATE	ALTERED	REV.	DATE	ALTERED	REV.	DATE	ALTERED	REV.	DATE	ALTERED	REV.	DATE	ALTERED	REV.	DATE	ALTERED	REV.	DATE	ALTERED
		CHD/APPD			CHD/APPD			CHD/APPD			CHD/APPD			CHD/APPD			CHD/APPD			CHD/APPD			CHD/APPD
ZONE			ZONE			ZONE			ZONE			ZONE			ZONE			ZONE			ZONE		

PROJECT	BHADRADRI TPS, UNITS # 1 TO 4 (4X270 MW), MANUGURU, KHAMMAM DISTRICT (FGD PACKAGE)
CUSTOMER	TELANGANA STATE POWER GENERATION CORPORATION LTD
CONSULTANT	DESEIN PRIVATE LIMITED

BHARAT HEAVY ELECTRICALS LTD. PROJECT ENGINEERING AND SYSTEMS DIVISION R.C. PURAM, HYDERABAD-32		NAME	SIGN	DATE
	DRN.	PUR		27.04.22
	CHD.	USHA		28.04.22
	APPD.	ESHAN		29.04.22

TITLE : ARCHITECTURAL DETAILS OF WET BALL MILL BUILDING

UNIT :	SCALE :	BHEL DWG. NO. : PY-DA-1-M113-1252-01	SHEET NO. 01 / NO. OF SHEET 02	REV. 00

GENERAL DIMENSIONAL LIMITS,FITS & TOLERANCES AS PER HY0230261

THE INFORMATION ON THIS DOCUMENT IS THE PROPERTY OF BHARAT HEAVY ELECTRICALS LIMITED. IT MUST NOT BE USED DIRECTLY OR INDIRECTLY IN ANY WAY DETRIMENTAL TO THE INTEREST OF THE COMPANY

FIRST ANGLE PROJECTION

(ALL DIMENSIONS ARE IN mm)

DRG. NO. PY-DA-1-M113-1252-01 SHT. OF

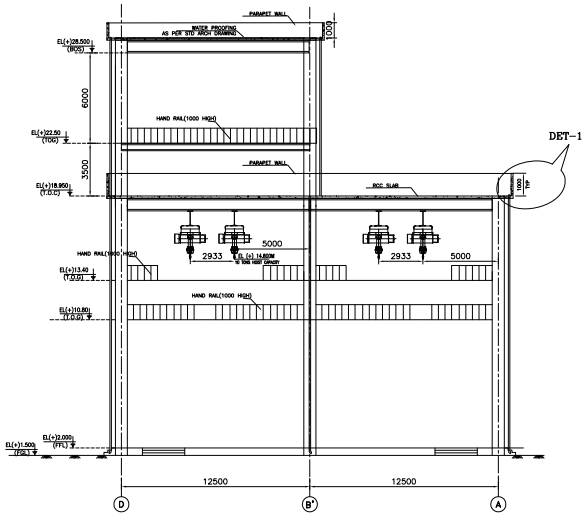

ELEVATION ALONG GRID-1

(GRID TOWARDS HILL)

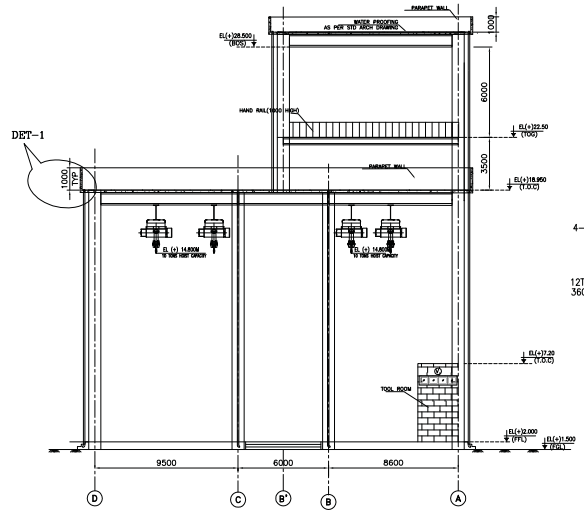

ELEVATION ALONG GRID-5

REFERENCE DWGS:

1. PY-LQ-0-M111-2001-01 -PLOT PLAN
2. 0-FW-000-01085-BTPS WBM BUILDING LAYOUT.
3. PE-DG-440-600-C001-R02-STANDARD DETAILS OF RCC WORKS
4. PE-DG-440-600-C003-STANDARD DETAILS OF ARCHITECTURAL WORKS
5. PE-DG-411-603-C001 R1- SITE LEVELING & GRADING
6. PYDS1M113125201-GDW SUPERSTRUCTURE GA DRAWING.
7. PYDR1M113125205-GDW SUPERSTRUCTURE GRADE SLAB DRAWING.

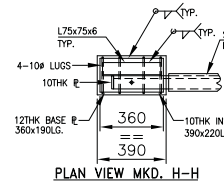

PLAN VIEW MKD. H-H

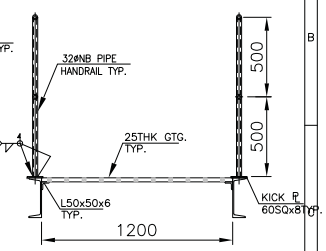

SECTIONAL VIEW MKD. J-J

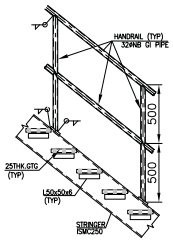

TYP. HANDRAIL FIXING DETAIL OVER STRINGER

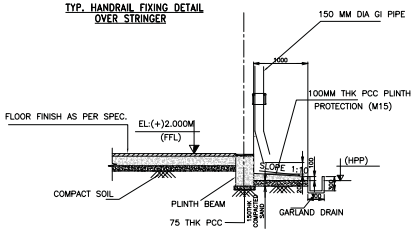

TYP. DETAILS OF PLINTH PROTECTION & R.C. SURFACE DRAIN

(NTS)

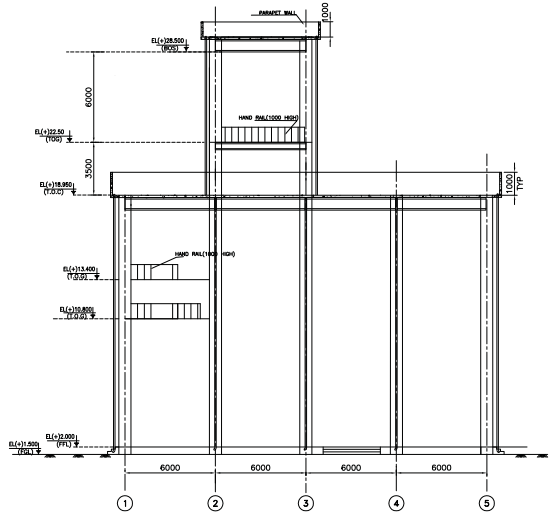

ELEVATION ALONG GRID-A

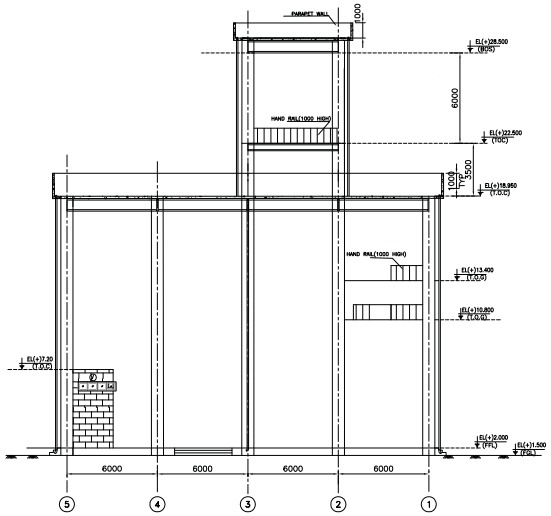

ELEVATION ALONG GRID-C

NOTES:-

*1. ALL EQUIPMENTS ARE SUITABLE FOR OUTDOOR APPLICATION AS PER THE MACHINE MANUFACTURER RECOMMENDATION, HENCE NO SIDE CLADING IS PROVIDED FOR BUILDING.

*2. OPENINGS SHALL BE VERIFIED/PROVIDED AS PER LATEST EQUIPMENT LAYOUT.

DOOR/WINDOW OPENINGS SCHEDULE

SYMBOL	MASONRY OPENING		REMARKS
	WIDTH	HEIGHT	
D	1000	2100	STEEL DOOR AS PER SPEC.
V	1000	600	POWER COATED ALUMINIUM GLAZED VENTILATOR FIXED WITH 4MM THK. CLEAR FLOAT GLASS.

SCHEDULE OF FINISHES

AREA	FLOORING	INTERNAL WALL AND PAINTING	EXTERNAL WALL AND PAINTING
WETBALL MILL BUILDING	50 MM THK. HEAVY DUTY CEMENT CONCRETE WITH METALLIC HARDENER TOPPING	-----	-----
TOOL ROOM	50 MM THK. HEAVY DUTY CEMENT CONCRETE WITH METALLIC HARDENER TOPPING	12MM THK. PLASTER 1:4 CEMENT SAND MORTAR ACRYLIC DISTEMPER PAINT	20MM THK. WITH 1:4 CEMENT SAND MORTAR ACRYLIC EMULSION PAINT.

REV.	DATE	ALTERED CHD/APPD	REV.	DATE	ALTERED CHD/APPD	REV.	DATE	ALTERED CHD/APPD	REV.	DATE	ALTERED CHD/APPD	REV.	DATE	ALTERED CHD/APPD	REV.	DATE	ALTERED CHD/APPD	REV.	DATE	ALTERED CHD/APPD	REV.	DATE	ALTERED CHD/APPD
ZONE			ZONE			ZONE			ZONE			ZONE			ZONE			ZONE			ZONE		

PROJECT	BHADRADRI TPS, UNITS # 1 TO 4 (4X270 MW), MANUGURU, KHAMMAM DISTRICT (FGD PACKAGE)			
CUSTOMER	TELANGANA STATE POWER GENERATION CORPORATION LTD			
CONSULTANT	DESEIN PRIVATE LIMITED			
BHARAT HEAVY ELECTRICALS LTD. PROJECT ENGINEERING AND SYSTEMS DIVISION R.C. PURAM, HYDERABAD-32		NAME	SIGN	DATE
	DRN.	PUR		27.04.22
	CHD.	USHA		28.04.22
	APPD.	ESHAN		29.04.22
TITLE : ARCHITECTURAL DETAILS OF WET BALL MILL BUILDING				
UNIT :	SCALE :	BHEL DWG. NO. : PY-DA-1-M113-1252-01	SHEET NO. 02 / NO. OF SHEET 02	REV. 00

THE INFORMATION ON THIS DOCUMENT IS THE PROPERTY OF BHARAT HEAVY ELECTRICALS LIMITED. IT MUST NOT BE USED DIRECTLY OR INDIRECTLY IN ANY WAY DETRIMENTAL TO THE INTEREST OF THE COMPANY

GENERAL DIMENSIONAL LIMITS,FITS & TOLERANCES AS PER HY02302261

FIRST ANGLE PRJECTION

ALL DIMENSIONS ARE IN MM

DRAWING NO. PE-DG-440-695-C011

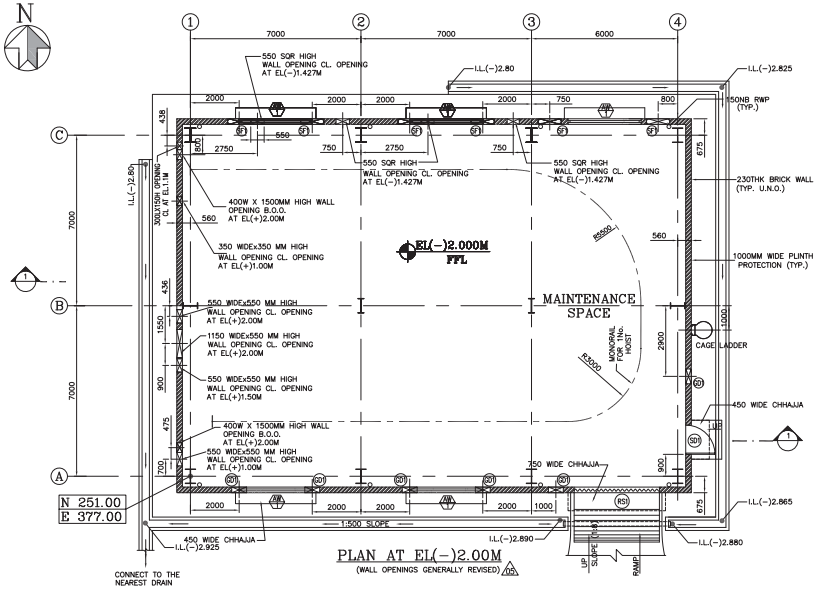

PLAN AT EL(-)2.00M
(WALL OPENINGS GENERALLY REVISED) 05

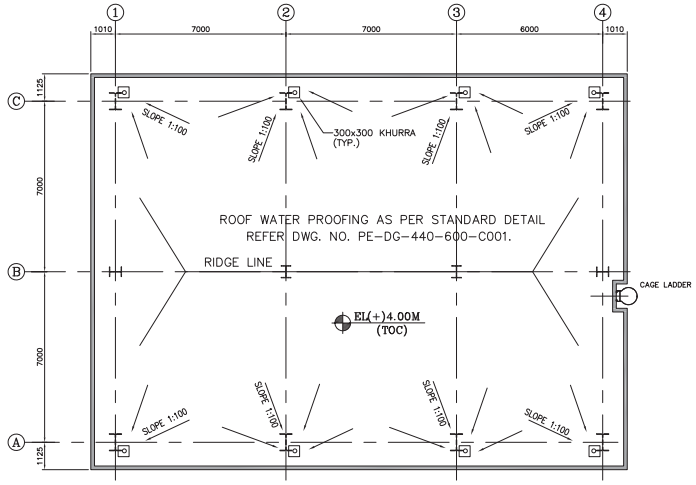

ROOF PLAN AT EL(+)4.00M

SCHEDULE OF FINISHES :-

AREA	FLOORING	DADO / SKIRTING	WALL	CEILING
ACW/ECW PUMP HOUSE	50 MM THICK HEAVY DUTY IPS CEMENT CONCRETE FLOOR WITH METALLIC HARDENER.	CEMENT CONCRETE SKIRTING 150 HIGH	SYNTHETIC ENAMEL PAINT UP TO 1.50MTS HEIGHT AND ACRYLIC EMULSION PAINT OVER WHITE CEMENT PUTTY FOR BALANCE HEIGHT	ACRYLIC DISTEMPER PAINT

SCHEDULE OF DOORS

DESIGNATION	SIZE	DESCRIPTION
RS1	3500x3500	ROLLING SHUTTER AS PER SPECIFICATION
SD1	1200x2500	SINGLE SHUTTER STEEL DOOR

SCHEDULE OF WINDOWS & VENTILATORS

AW1	2500x1500	ALUMINUM GLAZED WINDOW PARTLY OPENABLE & PARTLY FIXED-WITH 4mm THICK CLEAR FLOAT GLASS.
SF1	965 DIA.	AIR SUPPLY FAN
GD1	610 X 610	GRAVITY DAMPER

SCHEDULE OF EXTERNAL FINISHES

RWP	150mm ø G I RAIN WATER PIPE.(TYP)
EXTERIOR PLASTERING	IN TWO LAYERS 1st LAYERS 12MM THK. IN 1:4 CEMENT & 2nd LAYERS 8MM THK. IN 1:3 CEMENT
INTERIOR PLASTERING	12MM WITH 1:4 CEMENT SAND MORTAR
CEILING FINISHING	2MM WHITE CEMENT PUTTY
EXTERIOR FINISHING	EXTERNAL QUALITY ACRYLIC EMULSION PAINT.

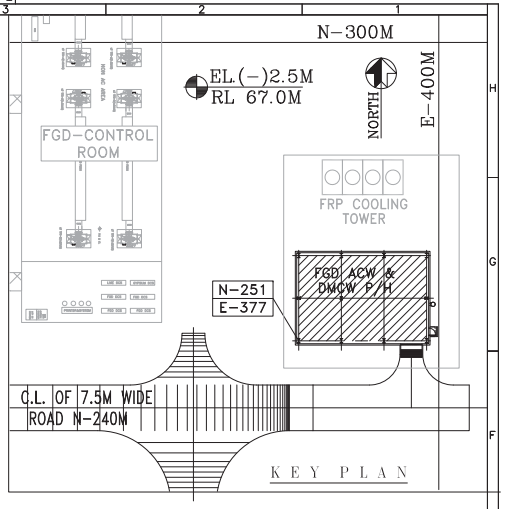

LEGEND.

TYP – TYPICAL
EL – ELEVATION
THK – THICKNESS
FFL – FLOOR FINISH LEVEL
B.O.L. – BOTTOM OF LINTEL
T.O.C. – TOP OF CONCRETE
T.O.P. – TOP OF PARAPET
FGL – FLOOR GROUND LEVEL
LVL. – LEVEL
EL. – ELEVATION

NOTES :

1. THIS DRAWING SHALL BE READ IN CONJUNCTION WITH TECHNICAL SPECIFICATION.
2. ALL DIMENSIONS ARE IN MM. AND LEVELS ARE IN M. UNLESS NOTED OTHERWISE.
3. ELEVATIONS 0.00M CORRESPONDS TO RL. 69.5M WHICH IS THE FINISHED FLOOR LEVEL OF POWER HOUSE BUILDING.
4. FOR OTHER GENERAL ARCHITECTURAL NOTES REFER DRAWING NO. PE-DG-440-600-C003.
5. UNLESS NOTED OTHERWISE WINDOW / DOOR/ ROLLING SHUTTER LOCATION SHALL BE AT CENTER BETWEEN GRIDS.
6. DISCREPANCY IF ANY SHOULD BE BROUGHT TO THE NOTICE OF ENGR-IN-CHARGE BEFORE EXECUTION.

REFERENCE DRAWINGS:-

1. PLOT PLAN----------PE-DG-411-100-M001
2. PIPING LAYOUT IN & AROUND ACW/ECW PUMP HOUSE FOR FGD---PE-DG-440-181-M001.
3. FGD WATER PH- ARCH. ELEVATION AND SECTION---PE-DG-440-695-C012

BHEL-PROJECT ENGINEERING MANAGEMENT(CIVIL)
THIS DRAWING MARKED(✓) IS RELEASED FOR
☑ COMMENTS/APPROVAL
☐ PLANNING/INFORMATION
☐ CONSTRUCTION
STAMP ALL PREVIOUS REVISION AS SUPERSEDED
ISSUED BY

NAME	MKM
SIGNATURE	–sd–
DATE	19.05.2021

REV.	DATE	ALTD	CHD	APPD	REV.	DATE	ALTD	CHD	APPD	REV.	DATE	ALTD	CHD	APPD	REV.	DATE	ALTD	CHD	APPD	REV.	DATE	ALTD	CHD	APPD	REV.	DATE	ALTD	CHD	APPD	REV.	DATE	ALTD	CHD	APPD	REV.	DATE	ALTD	CHD	APPD
																				05	19.05.21	KKS	KKS/MKM	AN	04	26.11.20	KKS	KKS/MKM	AN	03	23.07.20	KKS	KKS/MKM	AN	02	03.04.20	RB	KKS/MKM	AN
																					DRAWING REVISED AS PER LATEST INPUT. CHANGES MARKED AS 05					DRAWING REVISED AS PER LATEST INPUT. CHANGES MARKED AS 04					DRAWING REVISED AS PER LATEST INPUT. CHANGES MARKED AS 03					DRAWING REVISED AS PER LATEST INPUT. CHANGES MARKED AS 02			

REV.	DATE	ALTD	CHD	APPD
01	21.01.20	AKD	KKS/MKM	AN
WALL OPENINGS REVISED AS PER LATEST MECHANICAL INPUT. CHANGES MARKED AS 01				

JOB NO. 440

STATUS CONTRACT

DISTRIBUTION

PRINT SCALE IN METRE 0 2 4 6 8 10 20 30 40 50

CUSTOMER
TELANGANA STATE POWER GENERATION CORPORATION LTD.
HYDERABAD

CONSULTANT
DESEIN PRIVATE LIMITED

PROJECT 4 x 270 MW BHADRADRI TPS (FGD PACKAGE)
AT MANUGURU, KHAMMAM DISTRICT, TELANGANA

BHARAT HEAVY ELECTRICALS LTD
POWER SECTOR
PROJECT ENGINEERING MANAGEMENT
NOIDA (U.P.)

DEPT CODE		NAME	SIGN	DATE
C	DRN	AKD	–sd–	16.04.2019
	DESN	KKS	–sd–	16.04.2019
	CHD	MKM	–sd–	16.04.2019
	APPD	AN	–sd–	16.04.2019

TITLE
FGD WATER PH
ARCHITECTURAL PLAN

CIVIL	ELEC	C&I	MSE	MAX	DEPT.	SCALE –
					SIGN	
					DATE	

DRAWING NO. PE-DG-440-695-C011
SHEET – 1 OF 1 REV. 05

FORMAT SIZE A1

COPY RIGHT AND CONFIDENTIAL
The information on this document is the property of BHARAT HEAVY ELECTRICALS LIMITED
It must not be used directly or indirectly in any way detrimental to the interest of the company.

FIRST ANGLE PRJECTION

ALL DIMENSIONS ARE IN MM

DRAWING NO. PE-DG-440-695-C012

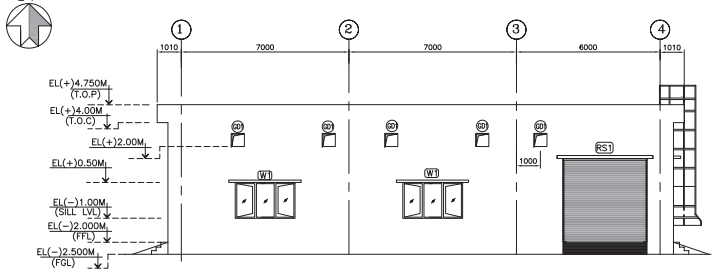

ELEVATION ALONG GRID-A

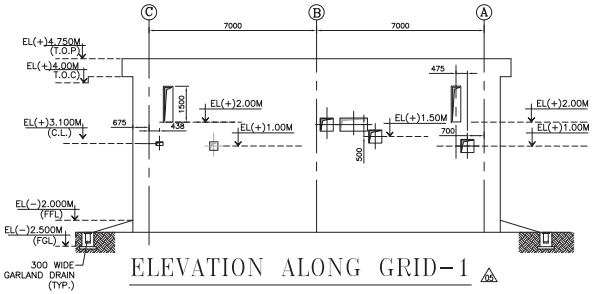

ELEVATION ALONG GRID-1 03

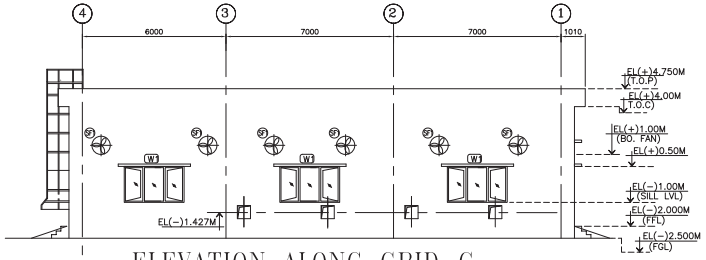

ELEVATION ALONG GRID-C 03

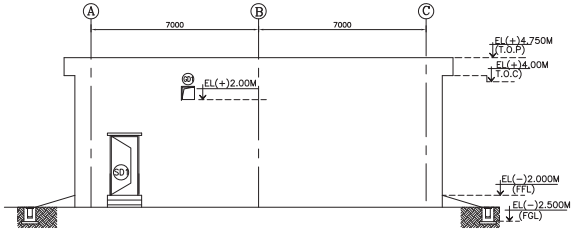

ELEVATION ALONG GRID-4

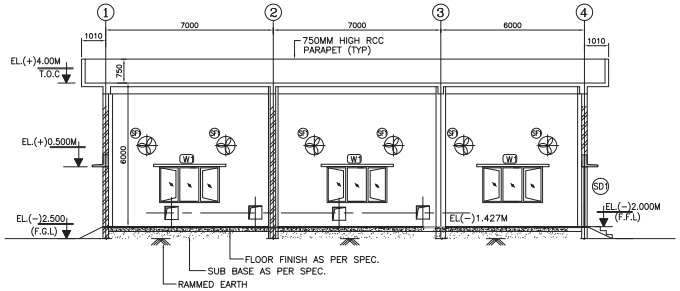

SECTION 1-1 03

LEGEND.

TYP – TYPICAL
EL – ELEVATION
THK – THICKNESS
FFL – FLOOR FINISH LEVEL
B.O.L. – BOTTOM OF LINTEL
T.O.C. – TOP OF CONCRETE
T.O.P. – TOP OF PARAPET
FGL – FLOOR GROUND LEVEL
LVL. – LEVEL
EL. – ELEVATION

NOTES :

1. THIS DRAWING SHALL BE READ IN CONJUNCTION WITH TECHNICAL SPECIFICATION.
2. ALL DIMENSIONS ARE IN MM. AND LEVELS ARE IN M. UNLESS NOTED OTHERWISE.
3. ELEVATIONS 0.00M CORRESPONDS TO RL. 69.5M WHICH IS THE FINISHED FLOOR LEVEL OF POWER HOUSE BUILDING.
4. FOR OTHER GENERAL ARCHITECTURAL NOTES REFER DRAWING NO. PE-DG-440-600-C003.
5. UNLESS NOTED OTHERWISE WINDOW / DOOR/ ROLLING SHUTTER LOCATION SHALL BE AT CENTER BETWEEN GRIDS.
6. DISCREPANCY IF ANY SHOULD BE BROUGHT TO THE NOTICE OF ENGR-IN-CHARGE BEFORE EXECUTION.

REFERENCE DRAWINGS:-

1. PLOT PLAN----------PE-DG-411-100-M001.
2. PIPING LAYOUT IN & AROUND ACW/ECW PUMP HOUSE FOR FGD---PE-DG-440-181-M001.

BHEL-PROJECT ENGINEERING MANAGEMENT(CIVIL)
THIS DRAWING MARKED(✓) IS RELEASED FOR
☑ COMMENTS/APPROVAL
☐ PLANNING/INFORMATION
☐ CONSTRUCTION
STAMP ALL PREVIOUS REVISION AS SUPERSEDED
ISSUED BY

NAME	MKM
SIGNATURE	–sd–
DATE	19.05.2021

REV.	DATE	ALTD	CHD	APPD	REV.	DATE	ALTD	CHD	APPD	REV.	DATE	ALTD	CHD	APPD	REV.	DATE	ALTD	CHD	APPD	REV.	DATE	ALTD	CHD	APPD	REV.	DATE	ALTD	CHD	APPD	REV.	DATE	ALTD	CHD	APPD	REV.	DATE	ALTD	CHD	APPD
																				05	19.05.21	KKS	KKS/MKM	AN	04	26.11.20	KKS	KKS/MKM	AN	03	23.07.20	KKS	KKS/MKM	AN	02	03.04.20	RB	–sd– KKS/MKM	–sd– AN
																					DRAWING REVISED AS PER LATEST INPUT. CHANGES MARKED AS 05					DRAWING REVISED AS PER LATEST INPUT. CHANGES MARKED AS 04					DRAWING REVISED AS PER LATEST INPUT. CHANGES MARKED AS 03					WALL OPENINGS REVISED AS PER LATEST MECHANICAL INPUT. CHANGES MARKED AS 02			

REV.	DATE	ALTD	CHD	APPD	REV.	DATE	ALTD	CHD	APPD
01	21.01.20	AKD	–sd– KKS/MKM	–sd– AN					
WALL OPENINGS REVISED AS PER LATEST MECHANICAL INPUT. CHANGES MARKED AS 01									

JOB NO. 440

STATUS CONTRACT

DISTRIBUTION

PRINT SCALE IN METRE 0 2 4 6 8 10 20 30 40 50

CUSTOMER
TELANGANA STATE POWER GENERATION CORPORATION LTD.
HYDERABAD

CONSULTANT
DESEIN PRIVATE LIMITED

PROJECT 4 x 270 MW BHADRADRI TPS (FGD PACKAGE)
AT MANUGURU, KHAMMAM DISTRICT, TELANGANA

BHARAT HEAVY ELECTRICALS LTD
POWER SECTOR
PROJECT ENGINEERING MANAGEMENT
NOIDA (U.P.)

DEPT CODE		NAME	SIGN	DATE
C	DRN	AKD	–sd–	16.04.2019
	DESN	KKS	–sd–	16.04.2019
	CHD	MKM	–sd–	16.04.2019
	APPD	AN	–sd–	16.04.2019

TITLE
FGD WATER PH
ARCHITECTURAL ELEVATION AND SECTION

CIVIL	ELEC	C&I	MSE	MAX	DEPT.	SCALE –
					SIGN	
					DATE	

DRAWING NO. PE-DG-440-695-C012

SHEET – 1 OF 1 REV. 05

FORMAT SIZE A1

COPY RIGHT AND CONFIDENTIAL
The information on this document is the property of BHARAT HEAVY ELECTRICALS LIMITED
It must not be used directly or indirectly in any way detrimental to the interest of the company.

FIRST ANGLE PRJECTION

ALL DIMENSIONS ARE IN MM

DRAWING NO. PE-DG-440-695-C015

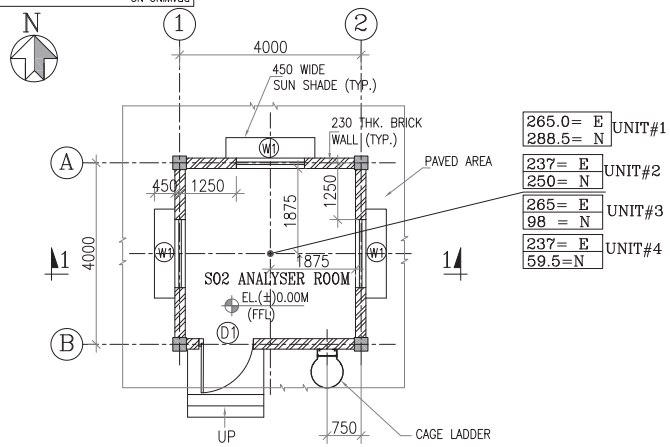

PLAN AT EL(±) 0.00M

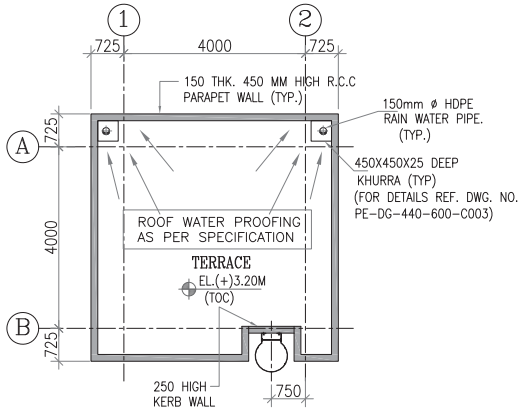

ROOF PLAN

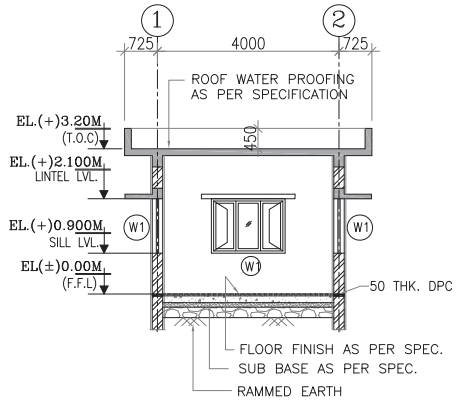

SECTION 1-1

SCHEDULE OF FINISHES :-

FLOORING	DADO/SKIRTING	WALL	CEILING
10 MM THICK NON-SKID FULLY VITRIFIED TILES OF (MINIMUM SIZE 600 MM X 600 MM.	CEMENT CONCRETE SKIRTING 150 HIGH	ACRYLIC EMULSION PAINT OVER WHITE CEMENT PUTTY.	ACRYLIC DISTEMPER PAINT

* COLOUR SCHEME TO BE DECIDED BY CUSTOMER AT SITE.

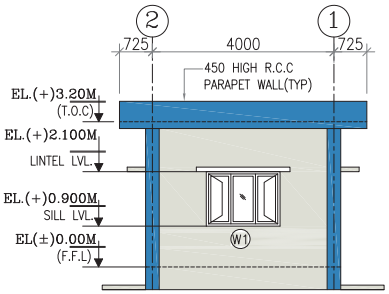

ELEVATION ON GRID-A

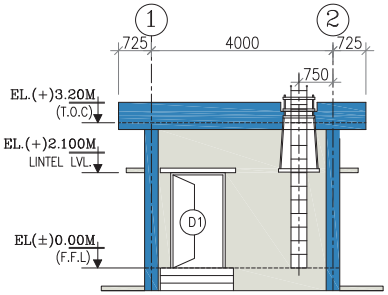

ELEVATION ON GRID-B

SCHEDULE OF DOOR & WINDOW :-

SYMBOL	MASONRY OPENING		SILL LEVEL AT EL..	LINTEL AT EL..	REMARKS
	WIDTH	HEIGHT			
D1	1200	2100	-	EL.(+)2.10M	SINGLE SHUTTER ALUMINIUM GLAZED DOOR WITH 6MM THK. CLEAR TOUGHENED GLASS.
W1	1500	1200	EL.(+)0.900M	EL.(+)2.10M	ANODIZED ALUMINIUM GLAZED PARTLY OPENABLE FIXED WINDOW WITH 6MM THK CLEAR FLOAT GLASS

NOTES:-

1. ALL DIMENSIONS ARE IN MILIMETERS AND ELEVATIONS IN METERS UNLESS NOTED.
2. ALL ELEVATIONS ARE REFERRED TO THE FINISHED GROUND FLOOR LEVEL OF POWER HOUSE BUILDING AS EL. 0.00 M WHICH CORRESPONDS TO RL.(+)69.500M
3. UNLESS NOTED OTHERWISE WINDOW / DOOR LOCATION SHALL BE AT CENTER BETWEEN GRIDS.
4. THIS DRAWING SHALL BE READ IN CONJUNCTION WITH CONTRACT TERMS AND CONDITIONS, SPECIFICATION AND SCHEDULE OF ITEMS.

REFERENCE DRGS :-

1. FGD PLOT PLAN----------PY-LQ-0-M111-2001-01
2. STANDARD DETAILS FOR ARCH WORKS. --- PE-DG-440-600-C003

LEGENDS:-

1. F.G.L -----FINISHED GROUND LEVEL
2. F.F.L -----FINISHED FLOOR LEVEL
3. T.O.C -----TOP OF CONCRETE

COLOR TO MATCHED WITH - 9002

COLOR TO MATCHED WITH - 5012

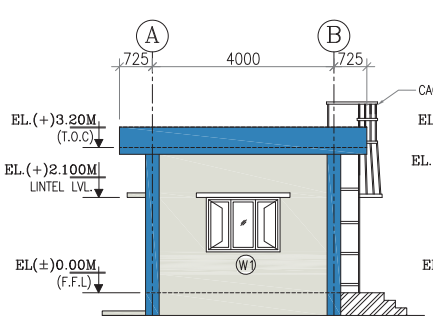

ELEVATION ON GRID-1

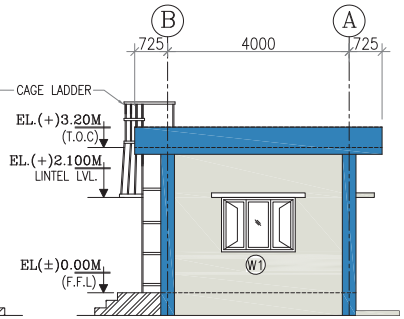

ELEVATION ON GRID-2

NOTE- Scan QR code for checking the latest rev. status of drawing.

BHEL-PROJECT ENGINEERING MANAGEMENT(CIVIL)
THIS DRAWING MARKED(✓) IS RELEASED FOR
☑ COMMENTS/APPROVAL
☐ PLANNING/INFORMATION
☐ CONSTRUCTION
STAMP ALL PREVIOUS REVISION AS SUPERSEDED
ISSUED BY

NAME	MKM
SIGNATURE	-sd-
DATE	02.02.2022

JOB NO.	440
STATUS	CONTRACT
DISTRIBUTION	
PRINT SCALE IN METRE	0 2 4 6 8 10 20 30 40 50

CUSTOMER
TELANGANA STATE POWER GENERATION CORPORATION LTD.
HYDERABAD

CONSULTANT
DESEIN PRIVATE LIMITED

PROJECT 4 x 270 MW BHADRADRI TPS (FGD PACKAGE)
AT MANUGURU, KHAMMAM DISTRICT, TELANGANA

BHARAT HEAVY ELECTRICALS LTD
POWER SECTOR
PROJECT ENGINEERING MANAGEMENT
NOIDA (U.P.)

DEPT CODE		NAME	SIGN	DATE
C	DRN	RB	-sd-	08.12.2021
	DESN	KKS	-sd-	08.12.2021
	CHD	MKM	-sd-	08.12.2021
	APPD	AN	-sd-	08.12.2021

TITLE
S02 ANALYSER ROOM
ARCHITECTURAL PLANS, SECTIONS, ELEVATIONS

CIVIL	ELEC	C&I	MSE	MAX	DEPT.	SCALE -	DRAWING NO.
					SIGN		PE-DG-440-695-C001
					DATE		SHEET - 1 OF 1 REV. 0

REV.	DATE	ALTD	CHD	APPD

FORMAT SIZE A1

COPY RIGHT AND CONFIDENTIAL
The information on this document is the property of BHARAT HEAVY ELECTRICALS LIMITED
It must not be used directly or indirectly in any way determental to the interest of the company.

FIRST ANGLE PRJECTION

ALL DIMENSIONS ARE IN MM

DRAWING NO. PE-DG-440-691-C001

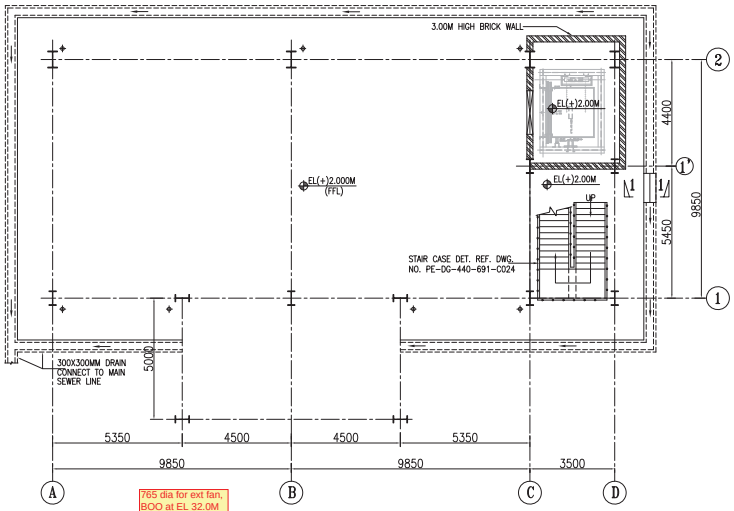

PLAN AT LEVEL EL(+)2.00M (F.G.L)

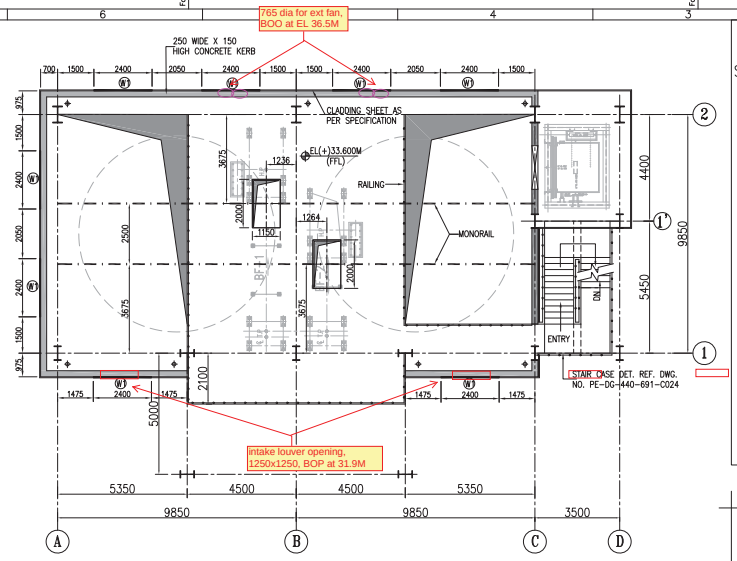

PLAN AT LEVEL EL(+)33.600M (F.F.L)

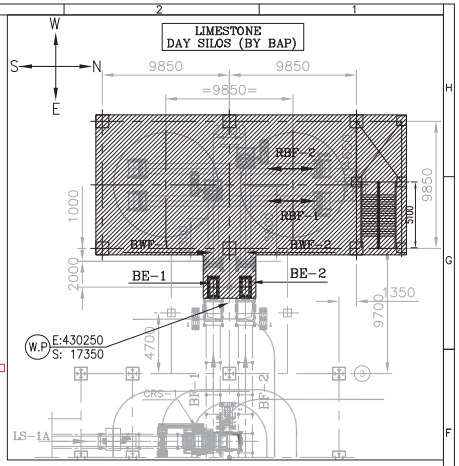

KEY PLAN

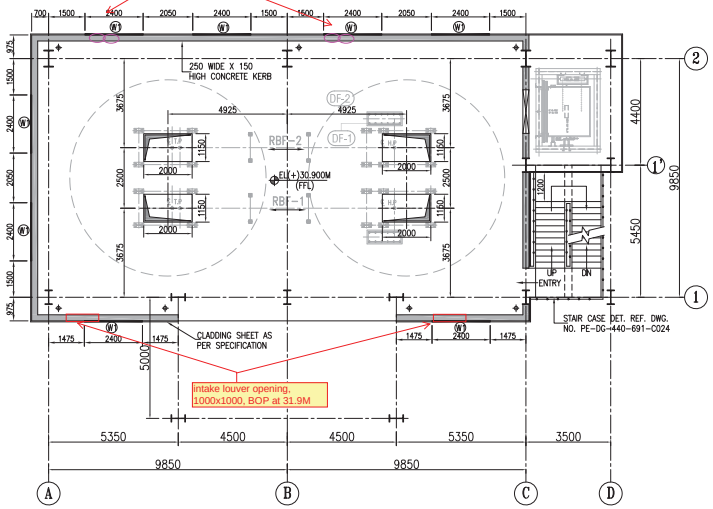

PLAN AT LEVEL EL(+)30.900M (F.F.L)

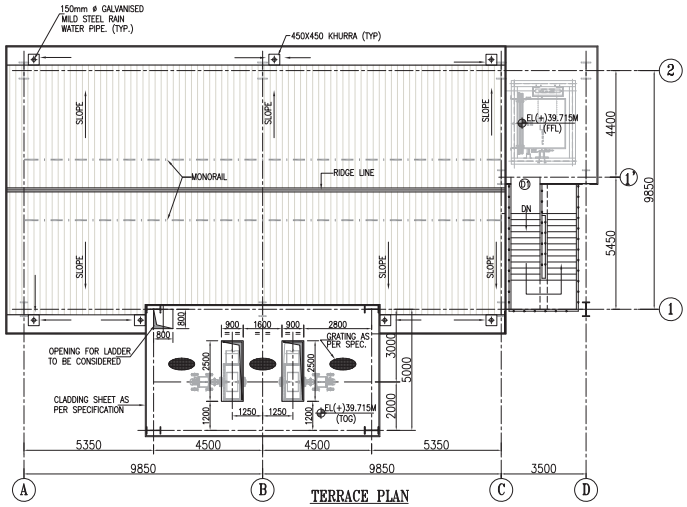

TERRACE PLAN

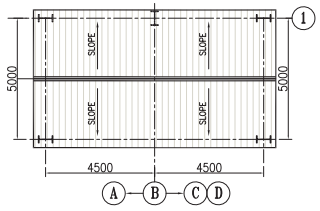

TERRACE PLAN

NOTES:-

1. THIS DRAWING SHALL BE READ IN CONJUNCTION WITH CONTRACT TERMS & CONDITIONS, SPECIFICATIONS AND SCHEDULE OF ITEMS.
2. ALL ELEVATIONS ARE WITH RESPECT TO MAIN POWER HOUSE BUILDING GROUND FLOOR LEVEL AS EL.(±)0.0OM. WHICH CORRESPONDS TO R.L.+69.50M. ABOVE MEAN SEA LEVEL.
3. ALL DIMENSIONS ARE IN MILLIMETER & ALL LEVELS/ELEVATIONS ARE IN METER UNO.
4. FOR ANY DETAIL & NOTES, REFER GENERAL NOTES DRG. (STEEL STRUCTURE) DRG. NO. PE-DG-440-600-C002
5. ALL WORK SHALL BE CARRIED OUT AS PER TECHNICAL SPECIFICATION, SCHEDULE OF ITEMS CONFORMING TO THE QUALITY CHECKS,SPECIFIED THEREIN AND IN FIELD QUALITY PLAN.
6. QUANTITIES INDICATED IN THE DRAWING.
7. UNLESS OTHERWISE NOTED BOLTS, SIZE OF GUSSET, SIZE OF WELD SHOWN IN TYP. DETAIL ARE INDICATIVE ONLY. THE ACTUAL NUMBER OF BOLTS REQUIRED AND CONNECTION TO BE DECIDED BY FABRICATOR.
8. SPLICING IN FLANGES AND WEB SHALL BE STAGGERED. SPLICING SHALL BE OF FULL STRENGTH BUTT WELD.
9. PAINTING ON STEEL STRUCTURE SHALL BE AS PER TECHNICAL SPECIFICATION.
10. ALL STRUCTURAL CONNECTIONS SHALL COMPLY TO SECTION-12 OF IS:800-2007.

REFERENCE DRGS.:-

1. FGD PLANT LAYOUT----------PY-LQ-0-M111-2001-01
2. GENERAL NOTES FOR STRUCTURAL STEEL WORKS----------PE-DG-440-600-C002
3. LIMESTONE DAY SILO & WET BALL MILL BUILDING GA DRAWING----------0-FW-000-01085-BTPS
4. DAY SILO SUPPORT STRUCTURE-ARCHITECTRAL ELEVATIONS----------PE-DG-440-691-C002
5. DAY SILO SUPPORT STRUCTURE-GA & RC DETAILS OF FOUNDATION--------PE-DG-440-691-C003
6. DAY SILO SUPPORT STRUCTURE-LONGITUDINAL FRAMING ARRANGMENT-------PE-DG-440-691-C004
7. DAY SILO SUPPORT STRUCTURE-TRANSVERSE FRAMING ARRANGMENT--------PE-DG-440-691-C005
8. DAY SILO SUPPORT STRUCTURE-FRAMING PLAN AT FEEDER FLOOR---------PE-DG-440-691-C006
9. DAY SILO SUPPORT STRUCTURE-FRAMING PLAN AT TRIPPER FLOOR & ROOF--PE-DG-440-691-C007
10. DAY SILO SUPPORT STRUCTURE-CLADDING DETAILS----------PE-DG-440-691-C010
11. DAY SILO SUPPORT STRUCTURE-STAIRCASE DETAILS----------PE-DG-440-691-C024
12. DAY SILO SUPPORT STRUCTURE-LIFT PIT DETAILS----------PE-DG-440-691-C025

LEGEND:-

FFL : FLOOR FINISHED LEVEL
BOBP: BOTTOM OF BASE PLATE
EL : ELEVATION
TYP : TYPICAL
TOG : TOP OF GRATING
TOS. : TOP OF STEEL
THK. : THICKNESS
STB : STAB
BKT : BRACKET
DRG : DRAWING

— COLOR TO BE MATCHED WITH RAL-5012
— COLOR TO BE MATCHED WITH RAL-9002
— CONCRETE HATCH
— BLOCK WALL IN SECTION
— GRATING

SCHEDULE OF OPENING FOR DOORS & WINDOWS

SYMBOL	Nos.	MASONRY OPENING		REMARKS
		WIDTH	HEIGHT	
D1	1	1000	2100	STEEL DOOR - SINGLE SHUTTER
W1	23	2400	1200	STEEL FRAMED FIXED GLAZED VENTILATOR

JOB NO.	440
STATUS	CONTRACT
DISTRIBUTION	
PRINT SCALE IN METRE	0 2 4 6 8 10 20 30 40 50

REV.	DATE	ALTD	CHD	APPD

CUSTOMER
TELANGANA STATE POWER GENERATION CORPORATION LTD.
HYDERABAD

CONSULTANT
DESEIN PRIVATE LIMITED

PROJECT
4x270MW BHADRADRI TPS (FGD PACKAGE)
AT MANUGURU, KHAMMAM DISTRICT, TELANGANA

BHARAT HEAVY ELECTRICALS LTD
POWER SECTOR
PROJECT ENGINEERING MANAGEMENT
NOIDA (U.P.)

DEPT CODE		NAME	SIGN	DATE
C	DRN	KAMALJEET	-sd-	26.12.2022
	DESN	KKS	-sd-	26.12.2022
	CHD	MKM	-sd-	26.12.2022
	APPD	AN	-sd-	26.12.2022

TITLE
DAY SILO SUPPORT STRUCTURE
ARCHITURAL PLAN & FINISHING SECHDULE

CIVIL	ELEC	C&I	MSE	MAX	DEPT.	SCALE -
					SIGN	
					DATE	

DRAWING NO.
PE-DG-440-691-C001

SHEET - 1 OF 1 REV. 0

FORMAT SIZE A0

COPY RIGHT AND CONFIDENTIAL
BHARAT HEAVY ELECTRICALS LIMITED
The information on this document is the property of BHARAT HEAVY ELECTRICALS LIMITED
It must not be used directly or indirectly in any way detrimental to the interest of the company.

FIRST ANGLE PROJECTION

ALL DIMENSIONS ARE IN MM

DRAWING NO. PE-DG-440-691-C002

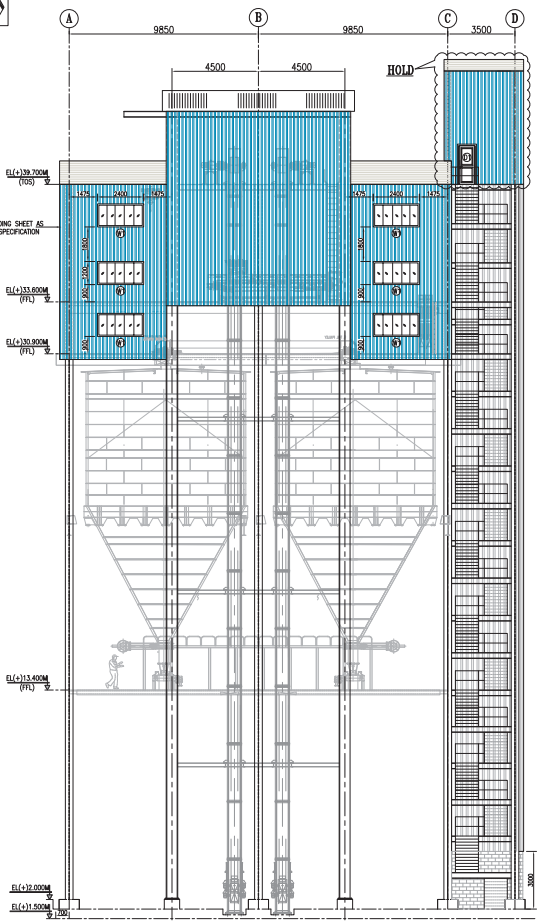

ELEVATION ALONG GRID-1

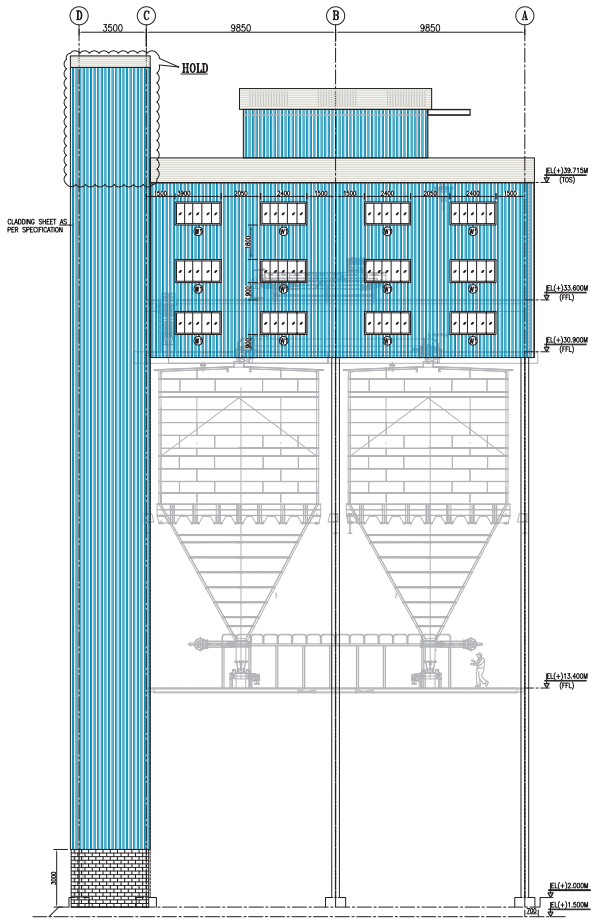

ELEVATION ALONG GRID-2

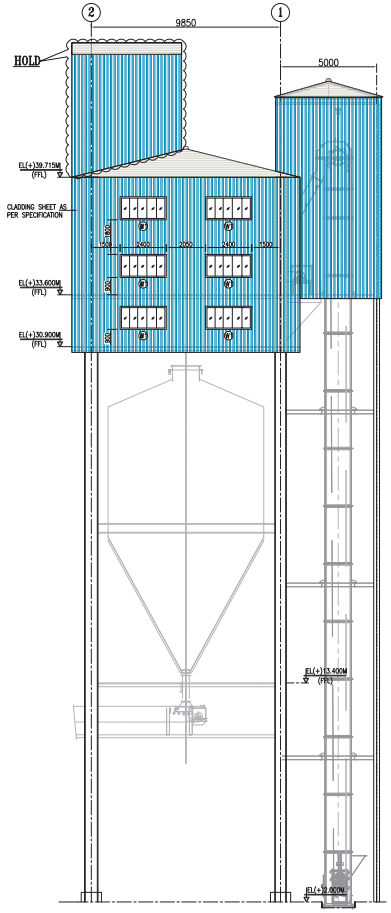

ELEVATION ALONG GRID-A

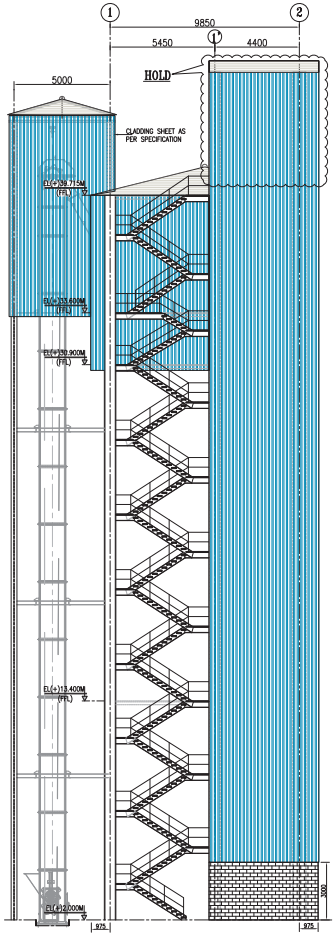

ELEVATION ALONG GRID-D

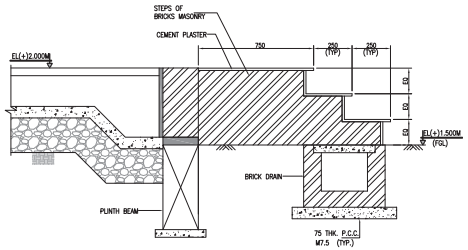

SECTION 1-1

REFERENCE DRGS.:-

1. FGD PLANT LAYOUT----------PY-LQ-0-M111-2001-01
2. GENERAL NOTES FOR STRUCTURAL STEEL WORKS----------PE-DG-440-600-C002
3. LIMESTONE DAY SILO & WET BALL MILL BUILDING GA DRAWING----------0-FN-000-01085-BTPS
4. DAY SILO SUPPORT STRUCTURE-ARCHITURAL PLAN & FINISHING SECHDULE---PE-DG-440-691-C001
5. DAY SILO SUPPORT STRUCTURE-GA & RC DETAILS OF FOUNDATION---------PE-DG-440-691-C003
6. DAY SILO SUPPORT STRUCTURE-LONGITUDINAL FRAMING ARRANGMENT--------PE-DG-440-691-C004
7. DAY SILO SUPPORT STRUCTURE-TRANSVERSE FRAMING ARRANGMENT---------PE-DG-440-691-C005
8. DAY SILO SUPPORT STRUCTURE-FRAMING PLAN AT FEEDER FLOOR----------PE-DG-440-691-C006
9. DAY SILO SUPPORT STRUCTURE-FRAMING PLAN AT TRIPPER FLOOR & ROOF---PE-DG-440-691-C007
10. DAY SILO SUPPORT STRUCTURE-CLADDING DETAILS----------PE-DG-440-691-C010
11. DAY SILO SUPPORT STRUCTURE-STAIRCASE DETAILS----------PE-DG-440-691-C024
12. DAY SILO SUPPORT STRUCTURE-LIFT PIT DETAILS----------PE-DG-440-691-C025

LEGEND:-

FFL : FLOOR FINISHED LEVEL
BOBP: BOTTOM OF BASE PLATE
EL : ELEVATION
TYP : TYPICAL
TOG : TOP OF GRATING

TOS. : TOP OF STEEL
THK. : THICKNESS
STB : STAB
BKT : BRACKET
DRG : DRAWING

— COLOR TO BE MATCHED WITH RAL-5012
— COLOR TO BE MATCHED WITH RAL-9002
— CONCRETE HATCH
— BLOCK WALL IN SECTION

NOTES:-

1. THIS DRAWING SHALL BE READ IN CONJUNCTION WITH CONTRACT TERMS & CONDITIONS, SPECIFICATIONS AND SCHEDULE OF ITEMS.
2. ALL ELEVATIONS ARE WITH RESPECT TO MAIN POWER HOUSE BUILDING GROUND FLOOR LEVEL AS EL(±)0.00M. WHICH CORRESPONDS TO R.L.+69.50M. ABOVE MEAN SEA LEVEL.
3. ALL DIMENSIONS ARE IN MILLIMETER & ALL LEVELS/ELEVATIONS ARE IN METER UNO.
4. FOR ANY DETAIL & NOTES, REFER GENERAL NOTES DRG. (STEEL STRUCTURE) DRG. NO. PE-DG-440-600-C002
5. ALL WORK SHALL BE CARRIED OUT AS PER TECHNICAL SPECIFICATION, SCHEDULE OF ITEMS CONFORMING TO THE QUALITY CHECKS,SPECIFIED THEREIN AND IN FIELD QUALITY PLAN.
6. QUANTITIES INDICATED IN THE DRAWING.
7. UNLESS OTHERWISE NOTED BOLTS, SIZE OF GUSSET, SIZE OF WELD SHOWN IN TYP. DETAIL ARE INDICATIVE ONLY. THE ACTUAL NUMBER OF BOLTS REQUIRED AND CONNECTION TO BE DECIDED BY FABRICATOR.
8. SPLICING IN FLANGES AND WEB SHALL BE STAGGERED. SPLICING SHALL BE OF FULL STRENGTH BUTT WELD.
9. PAINTING ON STEEL STRUCTURE SHALL BE AS PER TECHNICAL SPECIFICATION.
10. ALL STRUCTURAL CONNECTIONS SHALL COMPLY TO SECTION-12 OF IS:800-2007.

CUSTOMER
TELANGANA STATE POWER GENERATION CORPORATION LTD.
HYDERABAD

CONSULTANT
DESEIN PRIVATE LIMITED

PROJECT
4x270MW BHADRADRI TPS (FGD PACKAGE)
AT MANUGURU, KHAMMAM DISTRICT, TELANGANA

BHARAT HEAVY ELECTRICALS LTD
POWER SECTOR
PROJECT ENGINEERING MANAGEMENT
NOIDA (U.P.)

JOB NO.	440
STATUS	CONTRACT
DISTRIBUTION	
PRINT SCALE IN METRE	

REV.	DATE	ALTD	CHD	APPD

REV CODE		NAME	SIGN	DATE
C	DRN	RAMALIGET	-sd-	26.12.2022
	DESIN	KCS	-sd-	26.12.2022
	CHD	MRM	-sd-	26.12.2022
	APPD	AK	-sd-	26.12.2022

TITLE
DAY SILO SUPPORT STRUCTURE
ARCHITECTRAL ELEVATIONS

CIVIL	ELEC	C&I	MSE	MAX	DEPT. SIGN DATE	SCALE –

DRAWING NO.
PE-DG-440-691-C002
SHEET - 1 OF 1 REV. 0

Dec 26, 2022 – 5:37pm

FORMAT SIZE A0

COPY RIGHT AND CONFIDENTIAL
The information on this document is the property of BHARAT HEAVY ELECTRICALS LIMITED
It is not to be used directly or indirectly in any manner detrimental to the interests of the company.

FIRST ANGLE PROJECTION

ALL DIMENSIONS ARE IN MM

DRAWING NO. PE-DG-440-691-C010

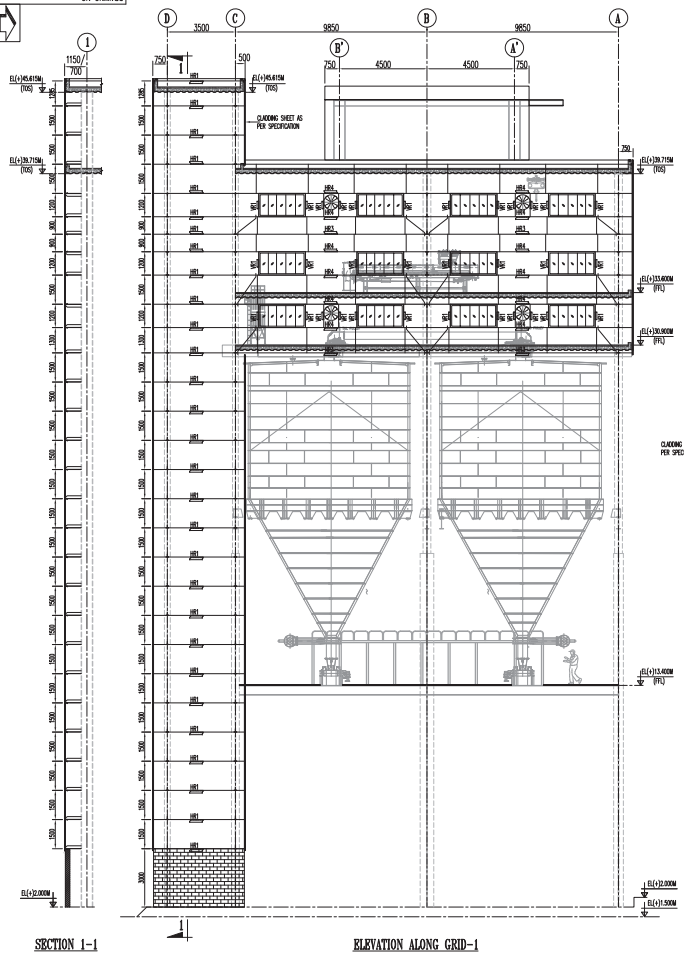

SECTION 1-1

ELEVATION ALONG GRID-1

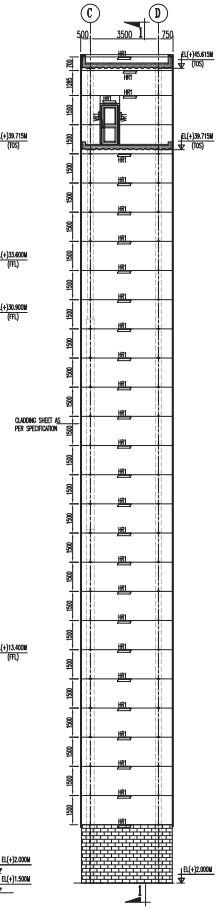

ELEVATION ALONG GRID-2

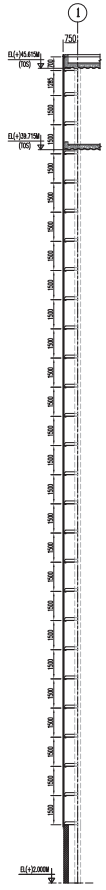

SECTION 2-2

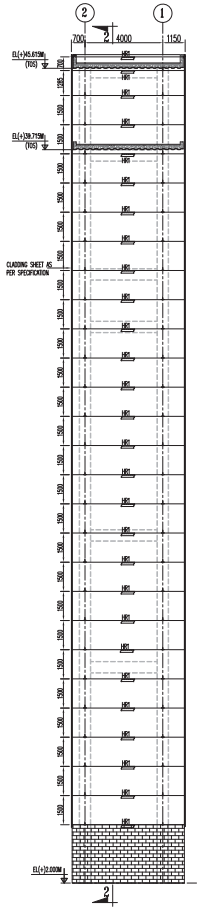

ELEVATION ALONG GRID-D

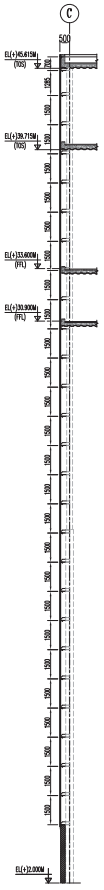

SECTION 3-3

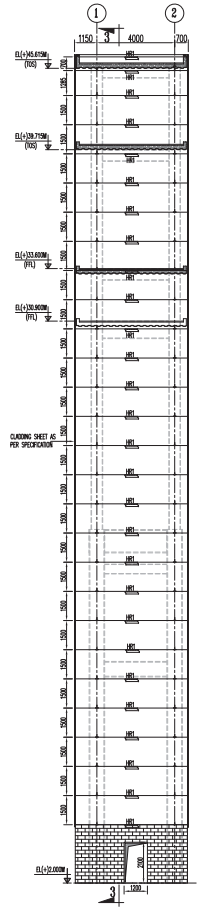

ELEVATION ALONG GRID-C

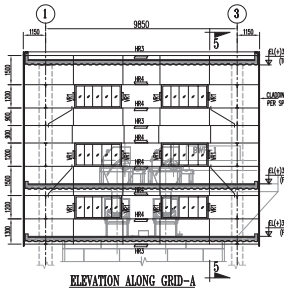

ELEVATION ALONG GRID-A

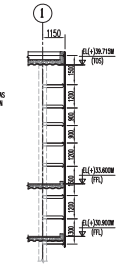

SECTION 5-5

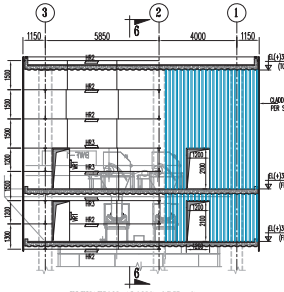

ELEVATION ALONG GRID-C

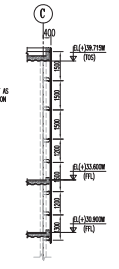

SECTION 6-6

NOTES:

1. THIS DRAWING SHALL BE READ IN CONJUNCTION WITH CONTRACT TERMS & CONDITIONS, SPECIFICATIONS AND SCHEDULE OF ITEMS.
2. ALL ELEVATIONS ARE WITH RESPECT TO MAIN POWER HOUSE BUILDING GROUND FLOOR LEVEL AS EL.(+)0.00M. WHICH CORRESPONDS TO R.L.+69.50M. ABOVE MEAN SEA LEVEL.
3. ALL DIMENSIONS ARE IN MILLIMETER & ALL LEVELS/ELEVATIONS ARE IN METER UNO.
4. FOR ANY DETAIL & NOTES, REFER GENERAL NOTES DRG. (STEEL STRUCTURE) DRG. NO. PE-DG-440-600-C002
5. ALL WORK SHALL BE CARRIED OUT AS PER TECHNICAL SPECIFICATION, SCHEDULE OF ITEMS CONFORMING TO THE QUALITY CHECKS,SPECIFIED THEREIN AND IN FIELD QUALITY PLAN.
6. QUANTITIES INDICATED IN THE DRAWING.
7. UNLESS OTHERWISE NOTED BOLTS, SIZE OF GUSSET, SIZE OF WELD SHOWN IN TYP. DETAIL ARE INDICATIVE ONLY. THE ACTUAL NUMBER OF BOLTS REQUIRED AND CONNECTION TO BE DECIDED BY FABRICATOR.
8. SPLICING IN FLANGES AND WEB SHALL BE STAGGERED. SPLICING SHALL BE OF FULL STRENGTH BUTT WELD.
9. PAINTING ON STEEL STRUCTURE SHALL BE AS PER TECHNICAL SPECIFICATION.
10. ALL STRUCTURAL CONNECTIONS SHALL COMPLY TO SECTION-12 OF IS:800-2007.

REFERENCE DRGS./DOCS.:

1. FGD PLANT LAYOUT----------PY-LQ-0-M111-2001-01
2. GENERAL NOTES FOR STRUCTURAL STEEL WORKS----------PE-DG-440-600-C002
3. LIMESTONE DAY SILO & WET BALL MILL BUILDING GA DRAWING----------0-FW-000-01085-BTPS
4. DAY SILO SUPPORT STRUCTURE-ARCHITURAL PLAN & FINISHING SCEDULE-----PE-DG-440-691-C001
5. DAY SILO SUPPORT STRUCTURE-GA & RC DETAILS OF FOUNDATION----------PE-DG-440-691-C003
6. DAY SILO SUPPORT STRUCTURE-LONGITUDINAL FRAMING ARRANGMENT----------PE-DG-440-691-C004
7. DAY SILO SUPPORT STRUCTURE-TRANSVERSE FRAMING ARRANGMENT----------PE-DG-440-691-C005
8. DAY SILO SUPPORT STRUCTURE-FRAMING PLAN AT FEEDER FLOOR----------PE-DG-440-691-C006
9. DAY SILO SUPPORT STRUCTURE-FRAMING PLAN AT TRIPPER FLOOR & ROOF----PE-DG-440-691-C007
10. DAY SILO SUPPORT STRUCTURE-STAIRCASE DETAILS----------PE-DG-440-691-C024
11. DAY SILO SUPPORT STRUCTURE-LIFT PIT DETAILS----------PE-DG-440-691-C025
12. DAY SILO SUPPORT STRUCTURE-ARCHITECTRAL ELEVATIONS----------PE-DG-440-691-C002

LEGEND:

T.O.S. - TOP OF STEEL
B.O.S. - BOTTOM OF STEEL
F.P.L. - FLANGE PLATE.
BKT. - BRACKET
EL. - ELEVATION
TYP. - TYPICAL
UNO - UNLESS NOTED OTHERWISE
STIFF. - STIFFENER
THK. - THICKNESS

- COLOR TO BE MATCHED WITH RAL-5012
- COLOR TO BE MATCHED WITH RAL-9002
- CONCRETE HATCH
- BLOCK WALL IN SECTION

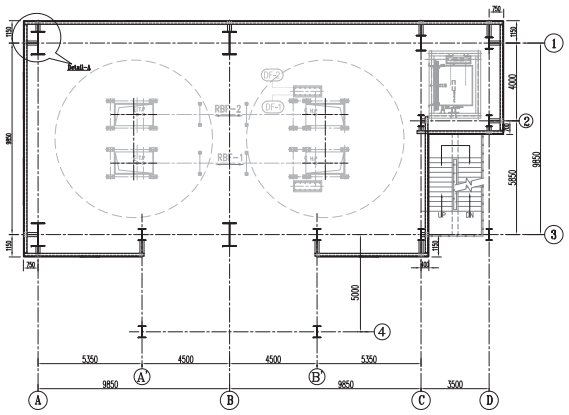

CLADDING LOCATION

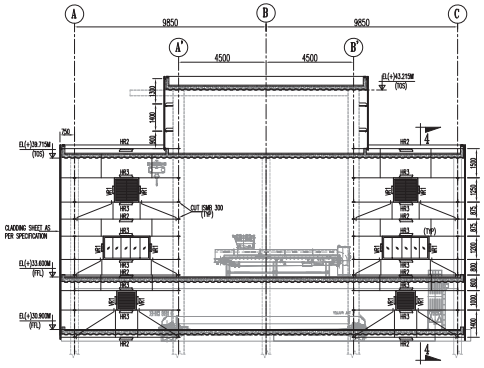

ELEVATION ALONG GRID-3

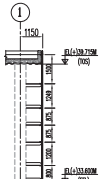

SECTION 4-4

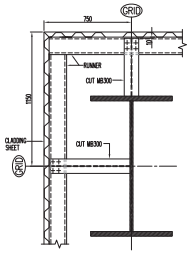

DETAIL-A

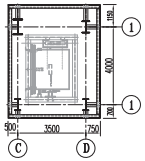

CLADDING LOCATION

TOTAL QTY OF STEEL - 45 M.T (APPROX.)

CUSTOMER	TELANGANA STATE POWER GENERATION CORPORATION LTD. HYDERABAD
CONSULTANT	DESEIN PRIVATE LIMITED
PROJECT	4x270MW BHADRADRI TPS (FGD PACKAGE) AT MANUGURU, KHAMMAM DISTRICT, TELANGANA
	BHARAT HEAVY ELECTRICALS LTD POWER SECTOR PROJECT ENGINEERING MANAGEMENT NOIDA (U.P.)
TITLE	DAY SILO SUPPORT STRUCTURE CLADDING DETAILS

JOB NO. 440
STATUS CONTRACT
DISTRIBUTION
PRINT SCALE IN METRE

REV.	DATE	ALTD	CHD	APPD

DEPT CODE		NAME	SIGN	DATE
C	DRN	KANILKET	-sd-	27.03.2023
	DESN	KCS	-sd-	27.03.2023
	CHD	MSN	-sd-	27.03.2023
	APPD	AN	-sd-	27.03.2023

CIVIL	ELEC	C&I	MSE	MAX	DEPT. SCALE -
					SIGN
					DATE

DRAWING NO. PE-DG-440-691-C010
SHEET - 1 OF 2 REV. 0

Mar 28, 2023 - 5:08pm FORMAT SIZE A0

COPY RIGHT AND CONFIDENTIAL
The information on this document is the property of BHARAT HEAVY ELECTRICALS LIMITED
It may not be reproduced or used in any manner without written permission of the company.

APPENDIX–II– MAKE UP WATER SCHEME

4X270 MW BHADRADRI FGD TPS

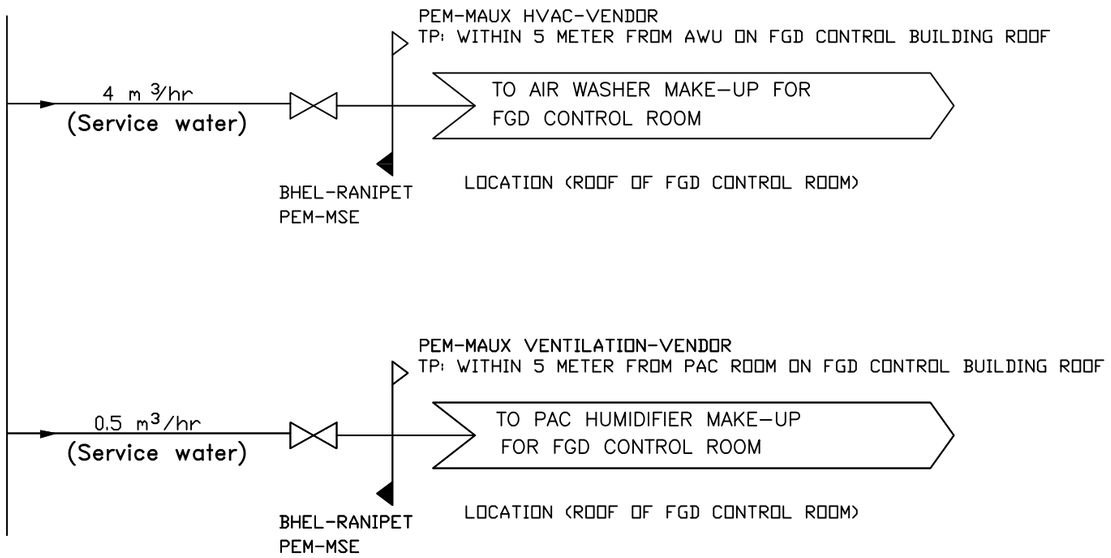

NOTE:–

1. HVAC MAKE-UP WATER PIPING INCLUDING FITTINGS SHALL BE TERMINATED WITHIN THE RANGE OF 5 METER DISTANCE FROM MAKE-UP WATER TANK / AIR-WASHER/ PAC ROOM BY BHEL FURTHER PIPING SHALL BE DONE BY RESPECTIVE HVAC VENDOR AS MARKED IN THIS DRG.

TITLE	MAKE UP WATER SCHEME FOR HVAC SYSTEM		
SCALE NTS	DATE	CHECKED	
	DRAWN	APPROVED	

COPY RIGHT AND CONFIDENTIAL
The information on this document is the property of BHARAT HEAVY ELECTRICALS LIMITED
It must not be used directly or indirectly in any way detrimental to the interest of the company.