	TITLE: TECHNICAL SPECIFICATION FOR CONDENSATE POLISHING UNIT 2X660 MW KHURJA STPP	BHEL DOCUMENTS NO.: PE-TS-475-155-A001	
		VOLUME IIB	
		SECTION – IA	
		REV. NO. 00	DATE:

6)	Connecting Rod	----------Manganese Bronze----------
7)	Cross head Guide	---------- Bronze----------
(vii)	Capacity & Head	----------As per system requirement ----------

3.2	**Activated Carbon Filter for Alkali**	
(i)	Number	One (1) number
(ii)	Type	Vertical cylindrical with dished end bottom
(iii)	Material of construction	Carbon steel plates to SA - 515 / 516 Gr. 70 with rubber lining inside. The lining shall be of rubber having a hardness of 65 plus/minus 5 shore-A meeting the requirements of IS: 4682, Part-I. Influent Distributor Material- SS 316
(iv)	Design code	ASME sec VIII div 1 ed. 2010 or acceptable equivalent international standard.
(v)	Size	10 M3/hr minimum (not less than the design capacity of alkali transfer cum recirculation pump)
(vi)	Bed depth of filter material	1 Meter (minimum)
(vii)	Flow velocity	12 m/hr (max).
(viii)	Seal	Teflon diaphragm
(ix)	Manhole	Two (2) nos. minimum each of Davit type and 600 mm dia.
(x)	Sight Windows	One (1) no. in backwash space
(xi)	Hand hole	One (1) no. of 150 mm dia for removal of activated carbon
(xii)	Accessories	Manhole, vent, drain, sample connection, level transmitter, operating platform, ladders, lifting lugs (4 Nos minimum) etc.
3.3	**Alkali diluent water heating tank (Hot water tank)**	
(i)	Number	One (1) number
(ii)	Type/Capacity (Each)	Vertical Cylindrical with dished end with Electric heater (2X50%) / 120% of max water required for regeneration or 10 Cu. M whichever is higher.
(iii)	Design code	ASME sec VIII div 1 ed. 2010 or acceptable equivalent international standard.
(iv)	Temperature of alkali to be heated	To obtain temp. from 15 deg C to 50 deg C at alkali mixing feed out let within 5 hours.
(v)	Temp. Transmitter	To be provided by the bidder.
(vi)	Burn out protection	To be provided by the bidder.

	TITLE: TECHNICAL SPECIFICATION FOR CONDENSATE POLISHING UNIT 2X660 MW KHURJA STPP	BHEL DOCUMENTS NO.: PE-TS-475-155-A001	
		VOLUME IIB	
		SECTION – IA	
		REV. NO. 00	DATE:

(vii)	Material of construction of tank:	Carbon steel plates to SA - 515 / 516 Gr. 70 with rubber lining inside. The lining shall be of rubber having a hardness of 65 plus/minus 5 shore-A meeting the requirements of IS: 4682, Part-I.
(viii)	Density meter	1 No. at each mixing tee outlet
(ix)	Accessories	Manhole, vent, drain, sample connection, level transmitter, operating platform, ladders, lifting lugs (4 Nos minimum), Pressure Relief Valve, Temperature Indicator & Switches etc.

3.4 DM water pumps

S. No.	Description / Data	DM Water (for Resin Transfer and Pre-Filter backwash) Pumps	DM Water (for Regeneration) Pumps
(i)	Numbers. required	Two (1 working+1 standby) (2x100%)	Two (1 working+1 standby) (2x100%)
(ii)	Type	----------Horizontal, Centrifugal ----------	
(iii)	Pump Speed	----------Maximum 1500 rpm----------	
(iv)	Capacity & head of each pump	As required	As required
(v)	Liquid to be handled	DM Water	DM Water
(vi)	Type of Shaft sealing	Mechanical Seal	Mechanical Seal
(vii)	**Material of construction**		
a)	Casing	----------ASTM A 351 CF 8M----------	
b)	Impeller	----------ASTM A 351 CF 8M----------	
c)	Shaft	---------- SS 316----------	
d)	Shaft Sleeves	----------SS 410----------	
e)	Wear Rings & Mechanical Seal	----------As Per manufacturer's Standard----------	
(viii)	'Y' type strainer	----------One number per pump (Material shall be SS316)-------	
(ix)	Recirculation line with motor actuated regulating type butterfly valve	----------Required ----------	
(x)	Accessories	Coupling Guards, drain plug, Vent valve, Suction hoses, isolation valves, etc. as required as per manufacturer's standard	

3.5 Air-blowers for Resin Mixing (Regeneration area)

(i)	Number	Two (1 working+1 standby)
(ii)	Type	Centrifugal/Twin lobe type
(iii)	Duty	Intermittent
(iv)	Capacity & Head	As required
(v)	Pressure gauge	One per blower

	TITLE: TECHNICAL SPECIFICATION FOR CONDENSATE POLISHING UNIT 2X660 MW KHURJA STPP	BHEL DOCUMENTS NO.: PE-TS-475-155-A001	
		VOLUME IIB	
		SECTION – IA	
		REV. NO. 00	DATE:

(vi)	Location	Outdoor
(vii)	Material of Construction	Casing, cover and stator – Cast Iron GR FG 260 to IS 210 Lobe/ Impeller – Cast Iron GR FG 260 to IS 210 Shaft – Carbon steel BS:970 En-8/ANSI-I045
(viii)	Accessories	Each blower shall be complete with motor, V-belt drive with belt guard, inlet filter/silencer, flexible couplings and discharge snubber, all mounted on a single base. Relief valve(s) shall also be provided by the bidder.
3.6	**DM Waste Water Collection Tank (BHEL SCOPE)**	
(i)	Number	One (1) Number
(ii)	Type	RCC Pit With Solvent Free Epoxy Coating.
(iii)	Capacity	Holding capacity shall be 1.5 times the capacity of DM water required for transferring resins from regeneration system or 50 cum whichever is higher.
3.7	**DM Waste Water Transfer pumps**	
(i)	Number	Two (1 working+1 standby) (2x100%)
(ii)	Type	Horizontal centrifugal single stage with priming system
(iii)	Pump Speed	Maximum 1500 rpm
(iv)	Capacity & head	Suitable to pump the total volume (Minimum 50 Cu.m/hr). Head to suit the requirement
(v)	Type of Shaft sealing	Mechanical Seal
(vi)	Material of construction	
•	casing, impeller	SS 316
•	Shaft	SS 316
•	shaft sleeve material	SS 316
(vii)	'Y' type strainer	One number per pump (Material shall be SS316)
(viii)	Recirculation line with pneumatic actuated regulating type diaphragm valve	Required
(ix)	Number of priming chambers	Two (2)
3.8	**Lime Tank for N Pit**	
(i)	Number	One (1)
(ii)	Material of construction	SS 316
(iii)	Type	Vertical Cylindrical Atmospheric with dished bottom and cover at top
(iv)	Useful capacity	Adequate to hold quantity of alkali required for neutralization of excess acid in waste effluent generated due to single regeneration of a condensate polisher mixed bed with 25% overall margin or 2 cum

	TITLE: TECHNICAL SPECIFICATION FOR CONDENSATE POLISHING UNIT 2X660 MW KHURJA STPP	BHEL DOCUMENTS NO.: PE-TS-475-155-A001	
		VOLUME IIB	
		SECTION – IA	
		REV. NO. 00	DATE:

		whichever is higher.	
(v)	Accessories Required	Vent, Overflow, drain connection, motor driven stirrer, dissolving basket (SS316), CO2 absorber, operating platform, ladders, manhole, lifting lugs (4 nos minimum) etc.	
(vi)	Stirrer per tank	Slow speed stirrer driven by motor drive and reduction gear. Speed of stirrer = 200 RPM Max. Material of Construction of each stirrer and agitator = Stainless Steel – 316.	
(vii)	Dissolving basket	One number. Material of construction : AISI-316	
3.9	**Alkali Transfer Cum Recirculation Pumps**		
(i)	Chemical to be used	Sodium Hydroxide (5-50% Conc)	
(ii)	Type	Horizontal Centrifugal	
(iii)	Numbers required	Two (1 working+1 standby)	
(iv)	Duty	Intermittent	
(v)	Capacity/ Head of Pump	As required,10 Cum/hr (min.)/ As required (10 MWC (min.)	
(vi)	Maximum Pump Speed	1500 rpm	
(vii)	Materials of construction	Stainless Steel-316	
(viii)	Pressure gauge	One per pump with teflon diaphragm seal	
(ix)	Pressure Dampener	One per pump	
(x)	Reinforced Rubber hoses	Minimum two (2) nos. of size 80 mm NB of min. 10 m. with isolation valves	
(xi)	'Y' type strainer	One number per pump (Material shall be SS316)	
(xii)	Accessories required for each pump	Coupling guard, drain plug, vent valve, Suction hoses, isolation valves, Y- type strainers, pressure gauges, pulsation dampener etc. as required as per manufacturer's standard	
3.10	**Acid & Alkali Unloading Pumps**		
S. No.	**Description / Data**	**Acid Unloading Pumps**	**Alkali Unloading Pumps**
(i)	Chemical to be used	30-33% HCl	5 to 50% NaOH
(ii)	Type	Horizontal, Centrifugal	Horizontal, Centrifugal
(iii)	Numbers required	Two (1W+1S) (2x100%)	Two (1W+1S) (2x100%)
(iv)	Duty	Intermittent	Intermittent
(v)	Capacity/ Head of Pump	As required	As required
(vi)	Maximum Pump Speed	Maximum 1500 rpm	Maximum 1500 rpm

(vii)	Materials of construction	Polypropylene or equiv. for HCl	Stainless Steel-316
(viii)	Pressure gauge	One per pump with teflon diaphragm seal	One per pump with teflon diaphragm seal
(ix)	Pressure Dampener	One per pump	One per pump
(x)	Reinforced Rubber hoses	Minimum two (2) nos. of size 80 mm NB of min. 10 m. with isolation valves	Minimum two (2) nos. of size 80 mm NB of min. 10 m. with isolation valves
(xi)	'Y' type strainer	One number per pump	One number per pump
(xii)	Accessories required for each pump	Coupling guard, drain plug, vent valve, Suction hoses, isolation valves, Y- type strainers, pressure gauges, pulsation dampener etc. as required as per manufacturer's standard	
4.0	**Piping**		
(i)	Resin Transfer piping material	Stainless steel type 304 Sch.40 (min.) seamless	
(ii)	Service vessel Inlet piping material	SEAMLESS CARBON STEEL ASTM A-106 Gr. B	
(iii)	Service vessel Outlet piping material	SEAMLESS CARBON STEEL ASTM A-106 Gr. B	
(iv)	Pre filter Inlet piping material	SEAMLESS CARBON STEEL ASTM A-106 Gr. B	
(v)	Pre filter Outlet piping material	SEAMLESS CARBON STEEL ASTM A-106 Gr. B	
(vi)	Service vessel rinse piping material	SEAMLESS CARBON STEEL ASTM A-106 Gr. B	
(vii)	Piping handling Acid Service	carbon steel Polypropylene lined/ CPVC as per ASTM F441 (Sch.80)	
(viii)	Piping material for Alkali	SS 316 Sch-10 (min.)	
(ix)	Piping material handling DM Water and Pre Filter backwash waste	Stainless steel SS 304 Schedule 40 (minimum)	
(x)	Piping material for DM waste water	Stainless steel type 304 Sch.40 (Min)	
(xi)	Instrument Air & service air piping material	hot dip galvanized (heavy grade) steel	
6.0	**SAFETY EQUIPMENT**	Ten (10) sets of safety equipment [(Personal Protection Equipment (PPE)] comprising PVC protection suits with hoods, rubber boots, face visors and thick PVC gauntlets shall also be provided by bidder. Two (2) Nos. Personnel water drench shower/safety shower and eye bath shall also be provided by the bidder.	

714406/2022/PS-PEM-MAX

SPECIFIC TECHNICAL REQUIREMENTS FOR ELECTRICAL

714406/2022/PS-PEM-MAX

TITLE:	SPECIFICATION NO.
TECHNICAL SPECIFICATION FOR CONDENSATE POLISHING UNIT	VOLUME NO. : **II-B**
	SECTION: **C**
	REV NO. : **00** DATE: 15.06.20
2X660 MW KHURJA STPP-TG	SHEET: 1 OF 1

CONTENTS

SECTION	TITLE	NO OF SHEETS
I	SPECIFIC TECHNICAL REQUIREMENTS	1
I	ELECTRICAL SCOPE BETWEEN BHEL & VENDOR (ANNEXURE-I)	2
I	ELECTRICAL LOAD DATA FORMAT (ANNEXURE-II)	1
I	CABLE SCHEDULE FORMAT (ANNEXURE-III)	1
I	EXPLANATORY NOTES FOR CABLE ROUTING	2
I	TECHNICAL SPECIFICATION FOR MOTORS	8
I	MOTOR DATASHEET-A	1
II	MOTOR DATASHEET-C	2
II	GENERAL TECHNICAL REQUIREMENT FOR LV MOTORS	4
II	REFERENCE QUALITY PLAN	3
II	TECHNICAL SPECIFICATION FOR CABLE TRAY & ACESSORIES	9

The requirements mentioned in Section-I shall prevail and govern in case of conflict between the same and the corresponding requirements mentioned in the descriptive portion in Section-II.

714406/2022/PS-PEM-MAX

	TECHNICAL SPECIFICATION FOR CONDENSATE POLISHING UNIT (ELECTRICAL PORTION) 2X660 MW KHURJA STPP-TG	SPECIFICATION NO.
		VOLUME NO. : **II-B**
		SECTION : **C**
		REV NO. : **01** DATE : 15/06/20
		SHEET : 1 OF 1

SPECIFIC TECHNICAL REQUIREMENTS: ELECTRICAL

1.0 EQUIPMENT & SERVICES TO BE PROVIDED BY BIDDER/ PURCHASER:

a) Services and equipment as per "Electrical Scope between BHEL and Vendor".
b) Any item/work either supply of equipment or erection material which have not been specifically mentioned but are necessary to complete the work for trouble free and efficient operation of the plant shall be deemed to be included within the scope of this specification. The same shall be provided by the bidder without any extra charge.
c) Supply of mandatory spares as specified in the specifications of mechanical equipments.
d) Electrical load requirement for **Condensate Polishing Unit.**
e) All equipment shall be suitable for the power supply fault levels and other climatic conditions mentioned in the enclosed project information.
f) Bidder to furnish list of makes for each equipment at contract stage, which shall be subject to customer /BHEL approval without any commercial and delivery implications to BHEL
g) Various drawings, data sheets as per required format, Quality plans, calculations, test reports, test certificates, operation and maintenance manuals etc shall be furnished as specified at contract stage. All documents shall be subject to customer/BHEL approval without any commercial implication to BHEL.
h) Motor shall meet minimum requirement of motor specification.
i) Vendor to clearly indicate equipment locations and local routing lengths in their cable listing furnished to BHEL.
j) Cable BOQ worked out based on routing of cable listing provided by the vendor for "both end equipment in vendor's scope" shall be binding to the vendor with +10 % margin to take care of slight variation in routing length & wastages.

2.0 EQUIPMENT & SERVICES TO BE PROVIDED BY PURCHASER FOR ELECTRICAL & TERMINAL POINTS:

Refer "Electrical Scope between BHEL and Vendor".

3.0 DOCUMENTS TO BE SUBMITTED ALONG WITH BID

3.1 The electrical specification without any deviation from the technical/quality assurance requirements stipulated shall be deemed to be complied by the bidder in case bidder furnishes the overall compliance of package technical specification in the form of compliance certificate/No deviation certificate.

3.2 No technical submittal such as copies of data sheets, drawings, write-up, quality plans, type test certificates, technical literature, etc, is required during tender stage. Any such submission even if made, shall not be considered as part of offer.

4.0 LIST OF ENCLOSURES

a) Electrical scope between BHEL & vendor (Annexure –I)
b) Electrical Load data format (Annexure –II)
c) BHEL cable listing format (Annexure –III)
d) Technical specification for motors.
e) Datasheets & quality plan for motors.

This is a part of Technical Specification No. CS-PEM-15-AND

ELECTRICAL SCOPE BETWEEN BHEL AND VENDOR

ANNE URE-I

SECTION-I

PACKAGES : CONDENSATE POLISHING UNIT
SCOPE OF VENDOR: SUPPLY, ERECTION & COMMISSIONING OF VENDOR'S EQUIPMENT
PROJECT: 2X660 MW KHURJA STPP-TG

S.NO	DETAILS	SCOPE SUPPLY	SCOPE E&C	REMARKS
1	415V MCC	BHEL	BHEL	240 V AC (supply feeder)/415 V AC (3 PHASE 4 WIRE) supply shall be provided by BHEL based on load data provided by vendor at contract stage for all equipment supplied by vendor as part of contract. Any other voltage level (AC/DC) required will be derived by the vendor.
2	Local Push Button Station (for motors)	BHEL	BHEL	Located near the motor.
3	Power cables, control cables and screened control cables for a) both end equipment in BHEL's scope b) both end equipment in vendor's scope c) one end equipment in vendor's scope	 BHEL BHEL BHEL	 BHEL Vendor BHEL	1. For 3.b) & c): Sizes of cables required shall be informed by vendor at contract stage (based on inputs provided by BHEL) in the form of cable listing. Finalisation of cable sizes shall be done by BHEL. Vendor shall provide lugs & glands accordingly. 2. Termination at BHEL equipment terminals by BHEL. 3. Termination at Vendor equipment terminals by Vendor.
4	Junction box for control & instrumentation cable	Vendor	Vendor	Number of Junction Boxes shall be sufficient and positioned in the field to minimize local cabling (max 10-12 mtrs) and trunk cable.
5	Any special type of cable like compensating, co-axial, prefab, MICC, optical fibre etc.	Vendor	Vendor	Refer C&I portion of specification for scope of fibre Optical cables if used between PLC/ microprocessor & DCS.
6	Cable trays, accessories & cable trays supporting system 100/ 50 mm cable trays/ Conduits/ Galvanised steel cable troughs for local cabling	BHEL Vendor	BHEL Vendor	Local cabling from nearby main route cable tray (BHEL scope) to equipment terminal (vendor's scope) shall be through 100/ 50 mm. cable trays/ conduits/ Galvanised steel cable troughs, as per approved layout drawing during contract stage.
7	Cable glands ,lugs and bimetallic strip for equipment supplied by Vendor	Vendor	Vendor	1. Double compression Ni-Cr plated brass cable glands 2. Solder less crimping type heavy duty tinned copper lugs for power and control cables.
8	Conduit and conduit accessories for cabling between equipment supplied by vendor	Vendor	Vendor	Conduits shall be medium duty, hot dip galvanised cold rolled mild steel rigid conduit as per IS: 9537.
9	Lighting	BHEL	BHEL	
10	Equipment grounding (including electronic earthing) & lightning protection	BHEL	BHEL	Refer note no. 4 for electronic earthing
11	Below grade grounding	BHEL	BHEL	

This is a part of Technical Specification for PEM-BHEL-15-MAX

PACKAGES : CONDENSATE POLISHING UNIT
SCOPE OF VENDOR: SUPPLY, ERECTION & COMMISSIONING OF VENDOR'S EQUIPMENT
PROJECT: 2X660 MW KHURJA STPP-TG

S.NO	DETAILS	SCOPE SUPPLY	SCOPE E&C	REMARKS
12	LT Motors with base plate and foundation hardware	Vendor	Vendor	Makes shall be subject to customer/ BHEL approval at contract stage.
13	Mandatory spares	Vendor	-	Vendor to quote as per specification.
14	Recommended O & M spares	Vendor	-	As specified elsewhere in specification
15	Any other equipment/ material/ service required for completeness of system based on system offered by the vendor (to ensure trouble free and efficient operation of the system).	Vendor	Vendor	
16	a) Input cable schedules (Control & Screened Control Cables) b) Cable interconnection details for above c) Cable block diagram	Vendor Vendor Vendor	- - -	Cable listing for Control and Instrumentation Cable and electronic earthing cable in enclosed excel format shall be submitted by vendor during detailed engineering stage.
17	Electrical Equipment & cable tray layout drawings	Vendor	-	For ensuring cabling requirements are met, vendor shall furnish Electrical equipment layout & cable tray layout drawings (both in print form as well as in AUTOCAD) of the complete plant (including electrical area) indicating location and identification of all equipment requiring cabling, and shall incorporate cable trays routing details marked on the drawing as per PEM interface comments. Cabling arrangement of the same (wherever overhead cable trays, trenches, cable ducts, conduits etc.) shall be decided during contract stage. Electrical equipment layout & cable tray layout drawing shall be subjected to BHEL/ customer approval without any commercial implications to BHEL.
18	Electrical Equipment GA drawing	Vendor	-	For necessary interface review.

NOTES:

1. Make of all electrical equipment/ items supplied shall be reputed make & shall be subject to approval of BHEL/customer after award of contract.
2. All QPs shall be subject to approval of BHEL/customer after award of contract without any commercial implication.
3. In case the requirement of Junction Box arises on account of Power Cable size mis-match due to vendor engineering at later stage, vendor shall supply the Junction Box for suitable termination.
4. Vendor shall indicate location of Electronic Earth pit in their Civil assignment drawing.

LOAD TITLE	RATING (KW / A)		UNIT (U)/STN (S)	Nos.		VOLTAGE CODE*	FEEDER CODE**	EMER. LOAD (Y)	CONT.(C)/ INTT.(I)	STARTING TIME >5 SEC (Y)	LOCATION	BOARD NO.	CABLE		BLOCK CABLE DRG. No.	CONTROL CODE	REMARKS	LOAD No.	VERIFICATION FROM MOTOR DATASHEET (Y/N)	KKS NO
	NAME PLATE	MAX. CONT. DEMAND (MCR)		RUNNING	STANDBY								SIZE CODE	NOs						
1	2	3	4	5	6	7	8	9	10	11	12	13	14	15	16	17	18	19	20	21

ANNEXURE-II

SECTION-I

NOTES: 1. COLUMN 1 TO 12 & 18 SHALL BE FILLED BY THE REQUISITIONER (ORIGINATING AGENCY); REMAINING COLUMNS ARE TO BE FILLED UP BY PEM (ELECTRICAL)/ CUSTOMER

2. ABBREVIATIONS : * VOLTAGE CODE (7):- (ac) A=11 KV, B=6.6 KV, C=3.3 KV, D=415 V, E=240 V (1 PH), F=110 V (cc): G=220 V, H=110 V, J=48 V, K=+24V, L=-24 V

: ** FEEDER CODE (8):- U=UNIDIRECTIONAL STARTER, B=BI-DIRECTIONAL STARTER, S=SUPPLY FEEDER, D=SUPPLY FEEDER (CONTACTER CONTROLLED)

LOAD DATA (ELECTRICAL)	JOB NO.	475	ORIGINATING AGENCY		PEM (ELECTRICAL)	
	PROJECT TITLE	2X660 MW KHURJA STPP-TG	NAME		DATA FILLED UP ON	
	SYSTEM	CONDENSATE POLISHING UNIT	SIGN.		DATA ENTERED ON	
	DEPTT. / SECTION	MAUX	SHEET 1 OF 1	REV. 00	DE'S SIGN. & DATE	

This is part of Technical Specification No. PE-TS-475-155-A001

CABLE SCHEDULE FORMAT

ANNEXURE III

UNITCABLENO	FROM	TO	PURPOSE	CABLE SCOPE (BHEL PEM/ VENDOR)	REMARKS	CABLESIZE	PATHCABLENO	TENTATIVE CABLE LENGTH

Explanatory notes for filling up cable list for routing through WinPath, the cable routing program (developed by Corporate R&D) being used in PEM.

1. For the purpose of clarity, it may please be noted that the information given in regard to the cables to be routed through WinPath as per the system elaborated below is called "Cable List", while the term "Cable Schedule" applies to the cable list with routing information added after routing has been carried out.
2. The cable list shall be entered as an MS Excel file in the format as per enclosed template EXT_CAB_SCH_FORMAT.XLS. No blank lines, special characters, header, footer, lines, etc. shall be introduced in the file. No changes shall be made in the title line (first line) of the template.
3. The field properties shall be as under:
    a. UNITCABLENO: A/N, up to sixteen (16) characters; each cable shall have its own unique, unduplicated cable number. In case this rule is violated, the cable cannot be taken up for routing.
    b. FROM: A/N, up to sixty (60) characters; the "From" end equipment/ device description and location to be specified here. Information in excess of 60 characters will be truncated after 60 characters.
    c. TO: A/N, up to sixty (60) characters; the "To" end equipment/ device description and location to be specified here. Information in excess of 60 characters will be truncated after 60 characters.
    d. PURPOSE: A/N, up to sixty (60) characters; the purpose (i.e. power cable/ indication/ measurement, etc.) to be specified here. Information in excess of 60 characters will be truncated after 60 characters.
    e. REMARKS: A/N, up to forty (40) characters; Any information pertinent to routing to be specified here (e.g., cable number of the cable redundant to the cable number being entered). Information in excess of 40 characters will be truncated after 40 characters.
    f. CABLESIZE: A/N, 7 characters exactly as per the codes indicated below shall be specified here. The program cannot route cables described in any other way/ format.
    g. PATHCABLENO: Field reserved for utilization by the program. User shall not enter any information here.
4. One list shall be prepared for each system/ equipment (i.e., separate and unique cable lists shall be prepared for each system).
5. The cables shall be described as per the scheme listed below:

A	NN	A	NNN
|	|	|	|
Cable Voltage Code (see B below)	No. of cores (e.g. 01,03,3H, 07)	Cable code (See C below)	Cable size (e.g. 035,185,2.5, 0.5)

(A) SYSTEM VOLTAGE CODES:
(ac) A = 11KV, B = 6.6KV, C = 3.3KV, D = 415V, E = 240V, F = 110V
(dc) G = 220V, H = 110V, J = 48V, K = +24V, L = -24V

(B) CABLE VOLTAGE CODES:
A = 11KV (Power cables)

Explanatory notes for filling up cable list for routing through WinPath, the cable routing program (developed by Corporate R&D) being used in PEM.

B = 6.6KV (Power cables)
C = 3.3KV (Power cables)
D = 1.1KV (LV & DC system power & control cables)
E = 0.6KV (0.5 sq. mm. Control cables)

(C) CABLE CODES

PVC Copper

A = Armoured FRLS	B = Armoured Non-FRLS
C = unarmoured FRLS	D = Unarmoured Non-FRLS

PVC Aluminium

E = Armoured FRLS	F = Armoured Non-FRLS
G = unarmoured FRLS	H = Unarmoured Non-FRLS

XLPE Copper

J = Armoured FRLS	K = Armoured Non-FRLS
L = unarmoured FRLS	M = Unarmoured Non-FRLS

XLPE Aluminium

N = Armoured FRLS	P = Armoured Non-FRLS
Q = unarmoured FRLS	R = Unarmoured Non-FRLS

S = FIRE SURVIVAL CABLES
T = TOUGH RUBBER SHEATH
U = OVERALL SCREENED
V = PAIRED OVERALL SCREENED
W = PAIRED INDIVIDUAL SCREENED
Y = COMPENSATING CABLES
I = PRE-FABRICATED CABLES
Z = JELLY FILLED CABLES

CLAUSE NO.	TECHNICAL REQUIREMENTS

MOTORS

1.00.00 GENERAL REQUIREMENTS

1.01.00 For the purpose of design of equipment/systems, an ambient temperature of 50 deg. Centigrade and relative humidity of 95% (at 40 deg C) shall be considered. The equipment shall operate in a highly polluted environment.

1.02.00 All equipment shall be suitable for rated frequency of 50 Hz with a variation of +3% & -5%, and 10% combined variation of voltage and frequency unless specifically brought out in the specification.

1.03.00 Contractor shall provide fully compatible electrical system, equipment, accessories and services.

1.04.00 All the equipment, material and systems shall, in general, conform to the latest edition of relevant National and international Codes & Standards, especially the Indian Statutory Regulations.

1.05.00 Paint shade shall be as per RAL 5012 (Blue) for indoor and outdoor equipment.

1.06.00 The responsibility of coordination with electrical agencies and obtaining all necessary clearances for contractors equipment and systems shall be under the contractor scope.

1.07.00 Degree of Protection

Degree of protection for various enclosures as per IEC60034-05 shall be as follows:-

i)	Indoor motors	-	IP 54
ii)	Outdoor motors	-	IP 55
iii)	Cable box-indoor area	-	IP 54
iv)	Cable box-Outdoor area	-	IP 55

2.00.00 CODES AND STANDARDS

1)	Three phase induction motors	:	IS/IEC:60034
2)	Single phase AC motors	:	IS/IEC:60034
3)	Crane duty motors	:	IS:3177, IS/IEC:60034
4)	DC motors/generators	:	IS/IEC:60034
5)	Energy Efficient motors	:	IS 12615, IEC: 60034-30

CLAUSE NO.	TECHNICAL REQUIREMENTS
3.00.00	**TYPE**
3.01.00	**AC Motors:** a) Squirrel cage induction motor suitable for direct-on-line starting. b) Continuous duty LT motors upto 200 KW Output rating (at 50 deg.C ambient temperature), shall be Premium Efficiency class-IE3, conforming to IS 12615, or IEC:60034-30. HT motors shall have minimum design efficiency of 95 % Tolerance on efficiency value applicable as per IEC 60034. c) Crane duty motors shall be squirrel cage Induction motor as per the requirement. d) Motor operating through variable frequency drives shall be suitable for inverter duty with VPI insulation. Also these motors shall comply the requirements stipulated in IEC: 60034-18-41 and IEC: 60034-18-42 as applicable. e) Motors operating through variable frequency drives shall also meet the requirements mentioned in subsection for VFD.
3.02.00	DC Motors Shunt wound
4.00.00	**RATING** (a) Continuously rated (S1). However, crane motors shall be rated for S4 duty, 40% cyclic duration factor. (b) Whenever the basis for motor or driven equipment ratings are not specified in the corresponding mechanical specification sub-sections, maximum continuous motor ratings shall be at least 10% above the maximum load demand of the driven equipment under entire operating range including voltage and frequency variations.
5.00.00	**TEMPERATURE RISE** **Air cooled motors** 70 deg. C by resistance method for both thermal class 130(B) & 155(F) insulation. **Water cooled** 80 deg. C over inlet cooling water temperature mentioned elsewhere, by resistance method for both thermal class 130(B) & 155(F) insulation. 41 deg.C over inlet cooling water maximum temperature of 39 deg.C for thermal class 90 (Y) wet wound Boiler circulation pump motor.
6.00.00	**OPERATIONAL REQUIREMENTS**

CLAUSE NO.	TECHNICAL REQUIREMENTS
6.01.00	**Starting Time**
6.01.01	For motors with starting time upto 20 secs. at minimum permissible voltage during starting, the locked rotor withstand time under hot condition at highest voltage limit shall be at least 2.5 secs. more than starting time.
6.01.02	For motors with starting time more than 20 secs. and upto 45 secs. at minimum permissible voltage during starting, the locked rotor withstand time under hot condition at highest voltage limit shall be at least 5 secs. more than starting time.
6.01.03	For motors with starting time more than 45 secs. at minimum permissible voltage during starting, the locked rotor withstand time under hot condition at highest voltage limit shall be more than starting time by at least 10% of the starting time.
6.01.04	Speed switches mounted on the motor shaft shall be provided in cases where above requirements are not met.
6.02.00	**Torque Requirements**
6.02.01	Accelerating torque at any speed with the lowest permissible starting voltage shall be at least 10% motor full load torque.
6.02.02	Pull out torque at rated voltage shall not be less than 205% of full load torque. It shall be 275% for crane duty motors.
6.03.00	**Starting voltage requirement** (a) Up to 85% of rated voltage for ratings below 110 KW (b) Up to 80% of rated voltage for ratings from 110 KW to 200 KW (c) Up to 85% of rated voltage for ratings from 201 KW to 1000 KW (d) Up to 80% of rated voltage for ratings from 1001 KW to 4000 KW (e) Up to 75 % of rated voltage for ratings above 4000KW Except AOP & JOP motors running on D.G emergency supply, starting voltage shall be 80%.
7.00.00	**DESIGN AND CONSTRUCTIONAL FEATURES**
7.01.00	Suitable single phase space heaters shall be provided on motors rated 30KW and above to maintain windings in dry condition when motor is standstill. Separate terminal box for space heaters & RTDs shall be provided. However for flame proof motors, space heater terminals inside the main terminal box may be acceptable.
7.02.00	All motors shall be either Totally enclosed fan cooled (TEFC) or totally enclosed tube ventilated (TETV) or Closed air circuit air cooled (CACA) type. However, motors rated 3000KW or above can be Closed air circuit water cooled (CACW). The method of movement

CLAUSE NO.	TECHNICAL REQUIREMENTS
	of primary and secondary coolant shall be self-circulated by fan or pump directly mounted on the rotor of the main motor as per IEC 60034-6. However VFD driven motors can be offered with forced cooling type with machine mounted fan or pump driven by separate electric motor. Motors and EPB located in hazardous areas shall have flame proof enclosures conforming to IS: 2148 as detailed below (a) Fuel oil area : Group – IIB (b) Hydrogen generation : Group - IIC or (Group-I, Div-II as per plant area NEC) or (Class-1, Group-B, Div-II as per NEMA / IEC60034)
7.03.00	Winding and Insulation (a) Type : Non-hygroscopic, oil resistant, flame resistant (b) Starting duty : Two hot starts in succession, with motor initially at normal running temperature. (c) 11kV & 3.3 kV AC motors : Thermal class 155 (F) insulation. The winding insulation process shall be Global Vacuum Pressure Impregnated i.e. resin poor method. The lightning Impulse & interturn insulation surge withstand level shall be as per IEC-60034 part-15. However winding insulation for wet wound Boiler circulation pump motor shall be thermal class 90 (Y) or better. (d) 240VAC, 415V AC & 220V DC motors : Thermal Class (B) or better
7.04.00	Motors rated above 1000KW shall have insulated bearings/housing to prevent flow of shaft currents.
7.05.00	Motors with heat exchangers shall have dial type thermometer with adjustable alarm contacts to indicate inlet and outlet primary air temperature.
7.06.00	Noise level for all the motors shall be limited to 85dB (A) except for BFP motor for which the maximum limit shall be 90 dB(A). Vibration shall be limited within the limits prescribed in IS/IEC 60034-14. Motors shall withstand vibrations produced by driven equipment. HT motor bearing housings shall have flat surfaces, in both X and Y directions, suitable for mounting 80mmX80mm vibration pads.
7.07.00	In HT motors, at least four numbers simplex / two numbers duplex platinum resistance type temperature detectors shall be provided in each phase stator winding. Each bearing of HT motor shall be provided with dial type thermometer and 2 numbers duplex platinum resistance type temperature detectors.

CLAUSE NO.	TECHNICAL REQUIREMENTS
7.08.00	Motor body shall have two earthing points on opposite sides.
7.09.00	11 KV motors shall be offered with Separable Insulated Connector (SIC) as per IEEE 386. The offered SIC terminations shall be provided with protective cover and trifurcating sleeves. SIC termination kit shall be suitable for fault level of 25 KA for 0.17 seconds.
7.10.00	3.3 KV motors shall be offered with dust tight phase separated double walled (metallic as well as insulated barrier) Terminal box. Suitable termination kit shall be provided for the offered Terminal box. The offered Terminal Box shall be suitable for fault level of 250 MVA for 0.12 sec. Removable gland plates of thickness 3 mm (hot/cold rolled sheet steel) or 4 mm (non-magnetic material for single core cables) shall be provided.
7.11.00	The spacing between gland plate & center of bottom terminal stud shall be as per Table-I.
7.12.00	All motors shall be so designed that maximum inrush currents and locked rotor and pullout torque developed by them at extreme voltage and frequency variations do not endanger the motor and driven equipment.
7.13.00	The motors shall be suitable for bus transfer schemes provided on the 11kV, 3.3 kV /415V systems without any injurious effect on its life.
7.14.00	For motors rated 2000 KW & above, neutral current transformers of PS class shall be provided on each phase in a separate neutral terminal box.
7.15.00	The size and number of cables (for HT and LT motors) to be intimated to the successful bidder during detailed engineering and the contractor shall provide terminal box suitable for the same.
8.00.00	The ratio of locked rotor KVA at rated voltage to rated KW shall not exceed the following (without any further tolerance) except for BFP motor. (a) From 50KW & upto 110KW : 11.0 (b) From 110 KW & upto 200 KW : 9.0 (c) Above 200 KW & upto 1000KW : 10.0 (d) From 1001KW & upto 4000KW : 9.0 (e) Above 4000KW : 6 to 6.5
9.00.00	CW motor shall be designed with minimum power factor of 0.8 at design duty point.
10.00.00	**TYPE TEST**
10.01.00	**HT MOTORS**
10.01.01	The contractor shall carry out the type tests as listed in this specification on the equipment to be supplied under this contract. The bidder shall indicate the charges for each of these type

CLAUSE NO.	TECHNICAL REQUIREMENTS
	tests separately in the relevant schedule of Section - VII- (BPS) and the same shall be considered for the evaluation of the bids. The type tests charges shall be paid only for the test(s) actually conducted successfully under this contract and upon certification by the employer's engineer.
10.01.02	The type tests shall be carried out in presence of the employer's representative, for which minimum 15 days notice shall be given by the contractor. The contractor shall obtain the employer's approval for the type test procedure before conducting the type test. The type test procedure shall clearly specify the test set–up, instruments to be used, procedure, acceptance norms, recording of different parameters, interval of recording, precautions to be taken etc. for the type test(s) to be carried out.
10.01.03	In case the contractor has conducted such specified type test(s) within last ten years as on the date of bid opening, he may submit during detailed engineering the type test reports to the employer for waival of conductance of such test(s). These reports should be for the tests conducted on the equipment similar to those proposed to be supplied under this contract and test(s) should have been either conducted at an independent laboratory or should have been witnessed by a client. The employer reserves the right to waive conducting of any or all the specified type test(s) under this contract. In case type tests are waived, the type test charges shall not be payable to the contractor.
10.01.04	Further the Contractor shall only submit the reports of the type tests as listed in "LIST OF TESTS FOR WHICH REPORTS HAVE TO BE SUBMITTED "and carried out within last ten years from the date of bid opening. These reports should be for the test conducted on the equipment similar to those proposed to be supplied under this contract and the test(s) should have been either conducted at an independent laboratory or should have been witnessed by a client. However if the contractor is not able to submit report of the type test(s) conducted within last ten years from the date of bid opening, or in the case of type test report(s) are not found to be meeting the specification requirements, the contractor shall conduct all such tests under this contract at no additional cost to the employer either at third party lab or in presence of client/ employer's representative and submit the reports for approval.
10.01.05	**LIST OF TYPE TESTS TO BE CONDUCTED** **The following type tests shall be conducted on each type and rating of HT motor** (a) No load saturation and loss curves upto approximately 115% of rated voltage. (b) Measurement of noise at no load. (c) Momentary excess torque test (subject to test bed constraint). (d) Full load test (subject to test bed constraint) (e) Temperature rise test at rated conditions. During heat run test, bearing temp., winding temp., coolant flow and its temp. shall also be measured. In case the temperature rise test is carried at load other than rated load, specific approval for the

CLAUSE NO.	TECHNICAL REQUIREMENTS
	test method and procedure is required to be obtained. Wherever ETD's are provided, the temperature shall be measured by ETD's also for the record purpose.
10.01.06	**LIST OF TESTS FOR WHICH REPORTS HAVE TO BE SUBMITTED** **The following type test reports shall be submitted for each type and rating of HT motor** (a) Degree of protection test for the enclosure followed by IR, HV and no load run test. (b) Terminal box-fault level withstand test for each type of terminal box of HT motors only. (c) Lightning Impulse withstand test on the sample coil shall be as per clause no. 4.3 IEC-60034, part-15 (d) Surge-withstand test on interturn insulation shall be as per clause no. 4.2 of IEC 60034, part-15
10.02.00	**LT Motors**
10.02.01	LT Motors supplied shall be of type tested design. During detailed engineering, the contractor shall submit for employer's approval the reports of all the type tests as listed in this specification and carried out within last *ten* years from the date of bid opening. These reports should be for the test conducted on the equipment similar to those proposed to be supplied under this contract and the test(s) should have been either conducted at an independent laboratory or should have been witnessed by a client.
10.02.02	However if the contractor is not able to submit report of the type test(s) conducted within last ten years from the date of bid opening, or in the case of type test report(s) are not found to be meeting the specification requirements, the contractor shall conduct all such tests under this contract at no additional cost to the employer either at third party lab or in presence of client/ employer's representative and submit the reports for approval.
10.02.03	**LIST OF TESTS FOR WHICH REPORTS HAVE TO BE SUBMITTED** **The following type test reports shall be submitted for each type and rating of LT motor of above 100 KW only** 1. Measurement of resistance of windings of stator and wound rotor. 2. No load test at rated voltage to determine input current power and speed 3. Open circuit voltage ratio of wound rotor motors (in case of Slip ring motors) 4. Full load test to determine efficiency power factor and slip. 5. Temperature rise test. 6. Momentary excess torque test.

CLAUSE NO.	TECHNICAL REQUIREMENTS
	7. High voltage test. 8. Test for vibration severity of motor. 9. Test for noise levels of motor(Shall be limited as per clause no 7.06.00 of this section) 10. Test for degree of protection and 11. Over speed test. 12. Type test reports for motors located in fuel oil area having flame proof enclosures as per IS 2148 / IEC 60079-1
10.03.00	All acceptance and routine tests as per the specification and relevant standards shall be carried out. Charges for these shall be deemed to be included in the equipment price.
10.04.00	The type test reports once approved for any projects shall be treated as reference. For subsequent projects of NTPC, an endorsement sheet will be furnished by the manufacturer confirming similarity and "No design Change". Minor changes if any shall be highlighted on the endorsement sheet.

TABLE - I

DIMENSIONS OF TERMINAL BOXES FOR LV MOTORS

Motor MCR in KW	**Minimum distance between centre of bottom terminal stud and gland plate in mm**
UP to 3 KW	**As per manufacturer's practice.**
Above 3 KW - upto 7 KW	85
Above 7 KW - upto 13 KW	115
Above 13 KW - upto 24 KW	167
Above 24 KW - upto 37 KW	196
Above 37 KW - upto 55 KW	249
Above 55 KW - upto 90 KW	277
Above 90 KW - upto 125 KW	331
Above 125 KW-upto 200 KW	385/203 (For Single core cables only)

CLAUSE NO.	TECHNICAL REQUIREMENTS

For HT motors the distance between gland plate and the terminal studs shall not be less than 500 mm.

PHASE TO PHASE/ PHASE TO EARTH AIR CLEARANCE:

NOTE: Minimum inter-phase and phase-earth air clearances for LT motors with lugs installed shall be as follows:

Motor MCR in KW	**Clearance**
UP to 110 KW	10mm
Above 110 KW and upto 150 KW	12.5mm
Above 150 KW	19mm

TITLE		SPECIFICATION NO.
	LV MOTORS **DATA SHEET-A**	VOLUME II B
		SECTION
	2X660 MW KHURJA STPP-TG	REV NO. 00 DATE 15.06.20
		SHEET 1 OF 1

1.0	Design ambient temperature	:	50 °C
2.0	Maximum acceptable kW rating of LV motor	:	Upto 200KW
3.0	Installation (Indoors/ Outdoors)	:	As required
4.0	Details of supply system		
	a) Rated voltage (with variation)	:	415V ± 10%
	b) Rated frequency (with variation)	:	50 Hz (Variation: +3% TO –5%)
	c) Combined voltage & freq. variation	:	10% (sum of absolute values)
	d) System fault level at rated voltage	:	50 kA for 1 sec
	e) Short time rating for terminal boxes		
	*110 kW and above (Breaker Controlled)	:	50 KA for 0.25 sec.
	* Below 110 kW (Contactor Controlled)	:	50 KA protected by HRC fuse
	f) LV System grounding	:	Solidly
5.0	Class of insulation	:	Class 'F', with temp rise limited to class B.
6.0	Minimum voltage for starting (As percentage of rated voltage)	:	85% for motor ratings below 110kW 80% for motor ratings from 110kW to 200kW.
7.0	Power cables data	:	Shall be given during Detailed engg.
8.0	Earth Conductor Size & Material	:	Shall be given during Detailed engg.
9.0	Space heater supply **(30KW & ABOVE)**	:	240 V, 1Φ , 50 Hz
10.0	Rating up to which Single phase motor	:	Acceptable below 0.20 Kw
11.0	Locked rotor current a) Limit as percentage of FLC	:	As per IS 12615
12.0	Makes	:	BHEL/ Customer approval (Package owner to take care)
13.0	Paint shade	:	Blue (RAL 5012)
15.0	Additional tests	:	As per QP
14.0	Degree Of protection for motor/ terminal box	:	Degree of protection for various enclosures as per IEC60034-05 shall be as follows:-

i) Indoor motors - IP 54
ii) Outdoor motors - IP 55
iii) Cable box-indoor area - IP 54
iv) Cable Box-Outdoor area - IP 55

* LT motors of continuous duty shall be energy efficient IE3 class conforming to IS-12615

15.0 TESTING REQUIREMENTS: IN LINE WITH SPECIFICATION

- **Also detailed Customer spec. for Motors is to be referred as enclosed with technical spec.**

714406/2022/PS-PEM-MAX

SPECIFIC TECHNICAL REQUIREMENTS FOR C&I

	C&I SPECIFICATION FOR CPU SYSTEM	SECTION: C SUB SECTION: C&I

INDEX

S. No.	DESCRIPTION
1	TITLE SHEET
2	INDEX SHEET
3	C&I SPECIFIC TECHNICAL REQUIREMENTS
4	LIST OF DOCUMENTS/DELIVERABLES
5	GENERAL TECHNICAL SPECIFICATION
6	MEASURING INSTRUMENTS
7	INSTRUMENT STUB DETAILS
8	MOTORISED VALVE ACTUATOR SPECIFICATION
9	PROCESS CONNECTION, PIPING
10	DRIVE AND INSTRUMENT INTERFACE DIAGRAM
11	INSTRUMENT CABLE INTERCONNECTION AND TERMINATION PHILOSOPHY
12	QUALITY ASSURANCE
13	TYPE TEST REQUIREMENT
14	MANDATORY SPARE LIST
15	KKS TAGGING PHILOSOPHY
16	SUB VENDOR LIST

C&I SPECIFIC TECHNICAL REQUIREMENT FOR DCS BASED CPU SYSTEM

	C&I SPECIFICATION FOR CPU SYSTEM	SECTION: C SUB SECTION: C&I

Specific Technical Requirements (C&I):

1.0 Condensate Polishing Unit System shall be operated from DDCMIS (BHEL's scope)

2.0 Interface of MCC, field Equipment, Actuators etc. with DDCMIS based control system shall be as per Drive Control Philosophy enclosed in specification.

3.0 Bidder to supply all the instruments required for the package along with necessary fittings, accessories and valve manifold etc. for control monitoring and operation of CPU system. All instruments shall be provided with durable epoxy coating for housing and all exposed surfaces of the instruments.

4.0 All the Electronic Transmitter for Pressure, Temperature, Differential Pressure and DP based Flow /Level measurements shall be genuine, verifiable PROFIBUS PA protocol compatible instruments. The transmitters shall be connected to DDCMIS through PROFIBUS PA protocol complying to IEC 61158 directly from transmitter. This is subject to customer approval and BHEL decision shall be final.

5.0 The PROFIBUS protocol design shall be further validated by BHEL and approved by NTPC during detailed engineering and any variation/ changes required based on DDCMIS system requirements and actual field installation, operational philosophy etc. shall be considered by bidder without any implications.

6.0 All transmitters (except PROFIBUS PA compatible transmitters) shall be smart type and shall have 4-20mA DC signal with superimposed digital communication (HART).

7.0 All the transmitters supplied by Bidder shall be rack/enclosure mounted. The transmitter racks/enclosures shall be in Bidder's scope of supply.

8.0 All Temperature sensors shall be Duplex type and temperature transmitter shall be provided for all temperature measurement applications. Bidder to provide temperature transmitter along with compensating cable, JB/Rack & other erection hardware.

9.0 Use of process actuated switch shall be avoided unless unavoidable.

10.0 All transmitters shall be suitably grouped together and mounted inside (i) Local Instruments Enclosures (LIEs) in case of open areas of the plant and (ii) In Local Instrument Racks (LIRs) in case of covered areas.

11.0 All field instruments enclosure shall be IP65, local panel/cabinet enclosure shall be IP 55, unless otherwise specified.

12.0 All instruments (except PROFIBUS PA compatible transmitters) and control elements shall be terminated on JB/LCP in field and both instrument and JB/LCP are in bidder scope. Number of Junction Boxes shall be sufficient and positioned in the field to minimize local cabling (max 12-15 mtrs) and trunk cable.

13.0 Electrical Actuators (as applicable) shall be Non-Intrusive type electric actuators envisaged with integral starter. The interface of these actuators with DCS shall be of two types viz. with Hardwired interface and with PROFIBUS DP interface. All actuator settings including torque, limit switches shall be possible without opening the actuator cover and LCD indication shall be available integral to actuator body. Open/Close command termination logic suitably built inside the actuator Details shall be referring the specification.

14.0 All ON, OFF, INCHING Type electric actuators shall be PROFIBUS DP compatible. However, the exact protocol shall be based on finalized protocol of DCS. If PROFIBUS DP protocol is envisaged, then actuator shall have two (redundant) PROFIBUS DP ports for connecting the redundant PROFIBUS DP cables. That is if one PROFIBUS DP cable is cut or not working/not available, then complete actuator functionality shall be available through the second redundant cable without any manual intervention.

15.0 Drive control philosophy/signal exchange list attached elsewhere in the specification are Tentative. Shall be finalized during detailed engineering.

16.0 Complete C&I system for CPU System is in bidder’s scope of supply. Items not specifically mentioned however required for the completeness of the system shall be supplied by bidder without any commercial implication.

17.0 The Contractor shall provide complete Instrumentation for control, monitoring and operation of entire CPU System. The requirements given are to be read in conjunction with detailed Technical specification enclosed in the specification. Further in case of any discrepancy in the requirement within the same section noted by the bidder in the specification, the same will be brought to the notice of BHEL in the form of pre- bid clarification. In absence of any pre-bid clarification, the more stringent requirement as per interpretation of customer shall prevail without any commercial implication.

	C&I SPECIFICATION FOR CPU SYSTEM	SECTION: C SUB SECTION: C&I

18.0 The quantity of instruments for the system shall be as per tender P &ID wherever provided of the respective system as a minimum, for bidding purpose. However, Bidder shall also include in his proposal all the instruments and devices that are needed for the completeness of the plant auxiliary system/ equipment supplied by the bidder, even if the same is not specifically appearing in the P & ID. During detail engineering if any additional instruments are required for safe & reliable operation of plant, bidder shall supply the same without any price implication.

19.0 Bidder to furnish electrical load/UPS load data during detailed engineering

20.0 415V AC/ 230V UPS Power supply shall be provided by BHEL at a single point, further distribution to various instruments/equipment of the system shall be in bidder scope. Bidder to include necessary power distribution board, changeover circuit in his scope. Any power supply other than the above, if required by any instrument/equipment has to be derived by the bidder from the above supply & all necessary hardware for the same shall be in bidder scope. Bidder to submit the power requirement along with the bid.

21.0 Power supply derived for contact interrogation, interposing relay and solenoid shall generally be ungrounded 24 V D.C. only.

22.0 The specifications for instruments mentioned in the specification are minimum requirements. The detail specifications shall be finalized during detail engineering. The bidders shall specifically mention any deviation they would like to take on the C&I specification. In absence of only deviation, a No deviation certificate is to be furnished.

23.0 The make of the items shall be from sub-vendor list. However, the make/model of various instruments/items/systems shall be subject to approval of owner/purchaser during detailed engineering stage. No commercial implication in this regard shall be acceptable. In case of any conflict or repetition of clauses in the specification, the more stringent requirements among them are to be complied with.

24.0 The design, manufacture, inspection, testing, site calibration and installation of all C&I equipment and systems covered under this specification shall conform to the latest editions of applicable codes and standards.

25.0 Bidder to perform tests of C&I items/instruments/systems as per Quality plans/type test attached in the specification. However, if any test not specified in the quality plan but specified in specification Tests

for I&C equipment included elsewhere in specification will have to perform by Bidder without any cost implication

26.0 The scope of cable shall be referred in Electrical scope split sheet in Electrical portion of the specification.

27.0 Contractor shall furnish Instrument Schedule, I/O list, Drive list, Cable Schedule, Cable interconnection (DCS end terminal details shall be provided to vendor during detail engineering to incorporate in cable interconnection), JB grouping, Annunciation list, SOE list, List of Instruments/devices for in BHEL approved format. Also reusable database format like MS Excel, MS Access etc. of these documents shall also be provided by Contractor in BHEL approved format. Soft copy of the formats shall be provided to the successful bidder

28.0 Instrument installation and accessories required for the same shall be in Bidder's scope and shall be subject to customer/BHEL's approval during detailed engineering.

29.0 Bidder to provide erection hardware including junction boxes, canopies, structural steel as required.

30.0 Every panel-mounted instrument, requiring power supply, shall be provided with a pair of easily replaceable glass cartridge fuses of suitable rating. Every instrument shall be provided with a grounding terminal and shall be suitably connected to the panel grounding bus.

31.0 Provision for separate Terminal block/wiring diagram for power and control blocks of control panel to be ensured.

32.0 To ensure availability, adequate redundancy in system design shall be provided at hardware, software and sensor level. For the protection system, independent sensing device shall be provided to ensure adequate safety of plant equipment.

33.0 Redundancy of sensors (excluding analysers) shall be provided by bidder

(i) Triple redundancy for all analog and binary inputs required for protection of system/drives.

(ii) For all other control functions dual redundancy of the sensors shall be provided by the bidders.

34.0 The design of the control systems and related equipment shall adhere to the principle of 'Fail Safe' Operation wherever safety of personnel / plant equipment is involved and shall not cause a hazardous

condition. However, it shall also be ensured that occurrence of false trips is avoided/ minimized.

35.0 All panels, cabinets shall be provided with a continuous bare copper ground bus. The ground bus shall be bolted to the panel structure on bottom on both sides. The bolts shall face inside of panels. The system ground shall be isolated from the panel ground with suitable isolators. All internal component grounds or common shall be connected to the system ground, which shall be fabricated of copper flat (size 25mm x 6mm min., length as applicable).

36.0 The requirements given are to be read in conjunction with detailed Technical specification enclosed.

37.0 The bidders shall specifically mention any deviation they would like to take on the C&I specification. In absence of only deviation, a “No deviation” certificate is to be furnished.

38.0 All the instruments/equipments/electrical items shall be provided & designed with maximum star rating as available in line with energy conservation policies notified by BEE, GOI at the time of supply

39.0 All field instruments shall be weatherproof, drip tight, dust tight and splash proof suitable for use under outdoor ambient conditions prevalent in the subject plant. All field-mounted instruments shall be mounted in suitable locations where maximum accessibility for maintenance is achieved. All the field instruments shall also be provided with SS tag nameplate and double compression type Nickel-plated brass cable gland. Gaskets, Fasteners, Counter and mating flange (SS316 material), nuts & bolts etc. shall also be included, wherever required with the field instruments.

40.0 For instruments which are not located inside covered building, suitable canopy/ protective arrangement shall be provided which shall be approved during detail engineering.

41.0 All the wetted parts of the instruments including the accessories like root valves, impulse piping, drain cocks, gauge-zeroing cocks, valve manifolds and all the other accessories required for mounting/erection of these local instruments as well as valves shall be of SS-316 material, suitable pressure class and same shall be in bidder’s scope.

42.0 All instruments should be supplied with valid calibration and test certificates provided by OEM.

	C&I SPECIFICATION FOR CPU SYSTEM	SECTION: C SUB SECTION: C&I

43.0 The solenoid operated valves/Dampers/Gate shall have a limit switch for open/close feedback.

44.0 Instrument installation shall be as per the attached "Standard Hook-up diagram of instrument."

45.0 At least 20% spare unused terminals shall be provided everywhere including local junction boxes, instrument racks/enclosures, termination/marshalling cabinets, etc.

46.0 The contacts of equipment mounted instruments; sensors, switches etc. For external connection including spare contacts shall be wired out to suitably located junction boxes by bidder.

47.0 Double root valve shall be provided for all pressure tapings where the design pressure exceeds 40kg/cm2.

48.0 All the instruments PG/DPG/DPT/PT etc. (as applicable) having contact with corrosive media shall be provided with chemical/diaphragm seal.

49.0 Bidder’s presence is required for 3 Man days (Excluding travel time) at EDN Bangalore during FAT of DDCMIS for certifying correctness & completeness of implementation of Control logic. Intimation to attained FAT shall be informed in 2 days advance. All the expenses like boarding, lodging and travel, Air fare etc. shall be in bidder’s scope.

50.0 Bidder’s presence is required for minimum 09 Man days (in three visits, excluding travel time) at site in which each visit shall be of minimum 03 Man days during commissioning of DCS for assistance related to process correctness. All the expenses like boarding, lodging and travel, Air fare etc. shall be in bidder’s scope.

51.0 Bidder’s representative (process/ C&I owner) shall be present at BHEL-PEM Office for minimum 03 man-days, for preparation of Control scheme and operation and control philosophy of AC and ventilation system. All the expenses like boarding, lodging and travel, Air fare etc. shall be in bidder’s scope

52.0 Number of pairs to be selected for Screen/ Control cable

(a) F-Type: 2P/4P/8P/12P(Size : 0.5 mm2)

(b) G-Type: 2P/4P/8P/12P(Size : 0.5 mm2)

(c) Core Cable: 3CX2.5sqmm2/ 5CX2.5sqmm2/ 12CX1.5sqmm2

	C&I SPECIFICATION FOR CPU SYSTEM	SECTION: C SUB SECTION: C&I

53.0 Bidder to provide mandatory spares as per mandatory spares list. Attached elsewhere in the specification.

54.0 Comprehensive Annual Maintenance Contract (AMC) for three (03) years after warranty period shall be provided by the contractor for analyser instruments of CPU plant. All weather Local Panel fitted with integral Air Conditioner shall be provided for housing analyzers etc if the same are not kept in AC rooms.

55.0 Editable & pdf copy of Drawings/Documents and data to be furnished after award of the contract: List of Drawings/Documents and data to be furnished by bidder after award of the contract are mentioned under section" List Of Documents/Deliverables".

- Power requirement.
- instruments data sheet.
- Instrument schedule
- Alarm Schedule
- Control scheme
- Control write-up
- Any other document decided during detailed engineering

Note:-

1. All equipment items shall be of latest design with proven on track record.

2. The above given scope is indicative & minimum. Any item/ equipment not indicated above however required for the completeness of the system is to be supplied by bidder without any technical, commercial and delivery implication to BHEL.

3. Documents of C&I System shall be submitted to end user/owner for approval during detail engineering. Changes, if any, shall be accommodated by the bidder without any price/time implication.

	C&I SPECIFICATION FOR CPU SYSTEM	SECTION: C SUB SECTION: C&I

LIST OF DOCUMENTS/DELIVERABLES

	C&I SPECIFICATION FOR CPU SYSTEM	SECTION: C SUB SECTION: C&I

LIST OF DELIVERABLES OF PEM - C&I DEPARTMENT			
Sl. No.	**DRAWING NO.**	**DRAWING/DOCUMENT TITLE**	**CATEGORY**
1	PE-V9-475-145-I901	CONTROL & OPERATIONAL WRITE-UP FOR THE SYSTEM WITH SET POINTS	A
2	PE-V9-475-145-I902	CONTROL SCHEME/LOGIC DIAGRAM (TO BE IMPLEMENTED IN DDCMIS)	A
3	PE-V9-475-145-I903	HMI PICTURES/PLANT SCHEMATICS	A
4	PE-V9-475-145-I904	INSTRUMENT SCHEDULE WITH SET POINTS	A
5	PE-V9-475-145-I905	I/O LIST (ANALOG & BINARY)	A
6	PE-V9-475-145-I906	DRIVE LIST/SOLENOID/ACTUATOR VALVE LIST WITH LOCATION DATA	A
7	PE-V9-475-145-I907	FIELD JB/LIE/LIR,DRIVES TERMINATIONS	A
8	PE-V9-475-145-I908	DATASHEETS FOR INSTRUMENTS, JBs, etc.	A
9	PE-V9-475-145-I909	QUALITY PLANS (INSTRUMENTS, etc.)	A
10	PE-V9-475-145-I910	INSTRUMENT HOOK-UP DRAWING	A
11	PE-V9-475-145-I911	THERMOWELL SIZING CALCULATION	A
12	PE-V9-475-145-I913	CABLE SCHEDULE & INTERCONNECTION	A
13	PE-V9-475-145-I914	ANNUNCIATION & SOE LIST	A

NOTES:
ANY OTHER DOCUMENT DECIDED DURING DETAILED ENGINEERING SHALL BE PROVIDED BY BIDDER WITHOUT ANY COMMERCIAL/TECHNICAL IMPLICATION.

CONTRACTOR TO SUBMIT REUSABLE DATABASE FORMATS IN BHEL/CUSTOMER APPROVED FORMATS LIKE MS EXCEL, MS ACCESS OF DOCUMENTS LIKE INSTRUMENT SCHEDULE, I/O LIST, DRIVE LIST, FIELD JB TERMINATIONS, CABLE SCHEDULE & INTERCONNECTION, etc.
SOFT COPY OF FORMATS SHALL BE PROVIDED TO SUCCESSFUL BIDDERS.

GENERAL TECHNICAL REQUIREMENT (GTR)

KHURJA SUPER THERMAL POWER PROJECT (2X660 MW) TURBINE GENERATOR AND ASSOCIATED PACKAGES BID DOC. NO.: THDC/RKSH/CC-9915-371	SEPARATOR

GENERAL TECHNICAL REQUIREMENTS

PART - C

CONTENTS

Clause No.	Description
1.00.00	Introduction
2.00.00	Brand Name
3.00.00	Base Offer & Alternate Proposals
4.00.00	Completeness of Facilities
5.00.00	Codes & Standards
6.00.00	Equipment Functional Guarantee
7.00.00	Design of Facilities/ Maintenance & Availability Considerations
8.00.00	Documents, Data and Drawings to be furnished by Contractor
9.00.00	Quality Assurance Programme
10.00.00	Pre-commissioning and Commissioning Facilities
11.00.00	Guarantee Tests
12.00.00	Taking over
13.00.00	Training Of Employer's Personnel
14.00.00	Safety Aspects During Construction And Erection
15.00.00	Noise Level
16.00.00	Packaging and Transportation
17.00.00	Electrical Enclosure
18.00.00	Instrumentation and Control
19.00.00	Electrical Noise Control
20.00.00	Instrument Air System
21.00.00	Tapping Points for Measurements
22.00.00	System Documentation
23.00.00	Maintenance Manuals of Electronic Modules
Annexure - I	
Annexure - II	
Annexure - III	
Annexure - IV	
Annexure - V	

GENERAL TECHNICAL REQUIREMENTS

1.00.00 **INTRODUCTION**

This part covers technical requirements which will form an integral part of the Contract. The following provisions shall supplement all the detailed technical requirements brought out in Section-VI, the Technical Specification and the Technical Data Sheets.

2.00.00 **BRAND NAME**

Whenever a material or article is specified or described by the name of a particular brand, manufacturer or vendor, the specific item mentioned shall be understood to be indicative of the function and quality desired, and not restrictive, other manufacturer's products may be considered provided sufficient information is furnished to enable the Employer to determine that the products proposed are equivalent to those named.

3.00.00 **BASE OFFER & ALTERNATE PROPOSALS**

The Bidder's proposal shall be based upon the use of equipment and material complying fully with the requirements specified herein. It is recognized that the Contractor may have standardized on the use of certain components, materials, processes or procedures different than those specified herein. Alternate proposals offering similar equipment based on the manufacturer's standard practice will also be considered, provided the base offer is in line with technical specifications and such proposals meet the specified design standards and performance requirement and are acceptable to the Employer. Sufficient amount of information for justifying such proposals shall be furnished to Employer along with the bid to enable the Employer to determine the acceptability of these proposals.

4.00.00 **COMPLETENESS OF FACILITIES**

4.01.00 Bidders may note that this is a contract inclusive of the scope as indicated elsewhere in the specification. Each of the plant shall be engineered and designed in accordance with the specification requirement. All engineering and associated services are required to ensure that a completely engineered plant is provided.

4.02.00 All equipments furnished by the Contractor shall be complete in every respect, with all mountings, fittings, fixtures and standard accessories normally provided with such equipment and/or those needed for erection, completion and safe operation of the equipment and for the safety of the operating personnel, as required by applicable

codes, though they may not have been specifically detailed in the respective specifications, unless included in the list of exclusions.

All same standard components/ parts of same equipment provided, shall be interchangeable with one another.

4.03.00 For the C&I systems, the Contractor shall be required to provide regular information about future upgrades and migration paths to the Employer.

5.00.00 **CODES & STANDARDS**

5.01.00 In addition to the codes and standards specifically mentioned in the relevant technical specifications for the equipment / plant / system, all equipment parts, systems and works covered under this specification shall comply with all currently applicable statutory regulations and safety codes of the Republic of India, as well as of the locality where they will be installed, including the following:

(a.) Indian electricity act

(b.) Indian electricity rules

(c.) Indian Explosives Act

(d.) Indian Factories Act and State Factories Act

(e) Indian Boiler Regulations (IBR)

(f.) Regulations of the Central Pollution Control Board, India

(g.) Regulations of the Ministry of Environment & Forest (MoEF), Government of India

(h) Pollution Control Regulations of Department of Environment, Government of India

(i.) State Pollution Control Board.

(j.) Rules for Electrical installation by Tariff Advisory Committee (TAC).

(k.) Building and other construction workers (Regulation of Employment and Conditions of services) Act, 1996

(l.) Building and other construction workers (Regulation of Employment and Conditions of services) Central Rules, 1998

(m.) Explosive Rules, 1983

(n.) Petroleum Act, 1984

(o.) Petroleum Rules, 1976,

(p.) Gas Cylinder Rules, 1981

(q.) Static and Mobile Pressure Vessels (Unified) Rules, 1981

(r.) Workmen's Compensation Act, 1923

(s.) Workmen's Compensation Rules, 1924

(t.) NTPC Safety Rules for Construction and Erection

(u.) NTPC Safety Policy

(v.) Any other statutory codes / standards / regulations, as may be applicable.

5.02.00 Unless covered otherwise in the specifications, the latest editions (as applicable as on date of bid opening), of the codes and standards given below shall also apply:

(a) Bureau of Indian Standards (BIS)

(b.) Japanese Industrial Standards (JIS)

(c.) American National Standards Institute (ANSI)

(d.) American Society of Testing and Materials (ASTM)

(e.) American Society of Mechanical Engineers (ASME)

(f.) American Petroleum Institute (API)

(g.) Standards of the Hydraulic Institute, U.S.A.

(h.) International Organisation for Standardization (ISO)

(i.) Tubular Exchanger Manufacturer's Association (TEMA)

	(j.) American Welding Society (AWS) (k.) National Electrical Manufacturers Association (NEMA) (l.) National Fire Protection Association (NFPA) (m.) International Electro-Technical Commission (IEC)/European Norm (EN) (n.) Expansion Joint Manufacturers Association (EJMA) (o.) Heat Exchange Institute (HEI) p) IEEE standard q) JEC standard
5.03.00	Other International/ National standards such as DIN, VDI, BS, GOST etc. shall also be accepted for only material codes and manufacturing standards, subject to the Employer's approval, for which the Bidder shall furnish, adequate information to justify that these standards are equivalent or superior to the standards mentioned above. In all such cases the Bidder shall furnish specifically the variations and deviations from the standards mentioned else where in the specification together with the complete word to word translation of the standard that is normally not published in English.
5.04.00	As regards highly standardized equipments such as Steam Turbine and Generator, National /International standards such as JIS, DIN, VDI, ISO, SEL, SEW, VDE, IEC & VGB shall also be considered as far as applicable for Design, Manufacturing and Testing of the respective equipment. However, for those of the above equipment not covered by these National / International standards, established and proven standards of manufacturers shall also be considered.
5.05.00	In the event of any conflict between the codes and standards referred to in the above clauses and the requirement of this specification, the requirement of Technical Specification shall govern.
5.06.00	Two (2) English language copies of all-national and international codes and/or standards used in the design of the plant, equipment, and structural works shall be provided by the Contractor to the Employer within two calendar months from the date of the Notification of Award.
5.07.00	In case of any change in codes, standards & regulations between the date of bid opening and the date when vendors proceed with fabrication, the Employer shall

have the option to incorporate the changed requirements or to retain the original standard. It shall be the responsibility of the Contractor to bring to the notice of the Employer such changes and advise Employer of the resulting effect.

6.00.00 **EQUIPMENT FUNCTIONAL GUARANTEE**

6.01.00 The functional guarantees of the equipment under the scope of the Contract is given in Section-VI Part - A & B of technical specification .These guarantees shall supplement the general functional guarantee provisions covered under General Conditions of Contract.

6.02.00 Liquidated damages for shortfall in meeting functional guarantee(s) during the performance and guarantee tests shall be assessed and recovered from the Contractor as specified elsewhere in this specification.

7.00.00 **DESIGN OF FACILITIES/ MAINTENANCE & AVAILABILITY CONSIDERATIONS**

7.01.00 **Design of Facilities**

All the design procedures, systems and components proposed shall have already been adequately developed and shall have demonstrated good reliability under similar conditions elsewhere.

The Contractor shall be responsible for the selection and design of appropriate equipments to provide the best co-ordinated performance of the entire system. The basic requirements are detailed out in various clauses of the Technical Specifications. The design of various components, assemblies and subassemblies shall be done so that it facilitates easy field assembly and dismantling. All the rotating components shall be so selected that the natural frequency of the complete unit is not critical or close to the operating range of the unit.

7.02.00 **Maintenance and Availability Considerations**

Equipment/works offered shall be designed for high availability, low maintenance and ease of maintenance. The Bidder shall specifically state the design features incorporated to achieve high degree of reliability/ availability and ease of maintenance. The Bidder shall also furnish details of availability records in the reference plants stated in his experience list.

Bidder shall state in his offer the various maintenance intervals, spare parts and man-hour requirement during such operation. The intervals for each type of maintenance namely inspection of the turbine and equipments, inspection of the

steam path and the minor and major overhauls shall be specified in terms of running hours, clearly defining the spare parts and manhour requirement for each stage.

Lifting devices i.e. hoists and chain pulley jacks, etc. shall be provided by the contractor for handling of any equipment or any of its part having weight in excess of 500 Kgs during erection and maintenance activities.

Lifting devices like lifting tackles, slings, etc. to be connected to hook of the hoist / crane shall be provided by the contractor for lifting the equipment and accessories covered under the specification.

8.00.00 **DOCUMENTS, DATA AND DRAWINGS TO BE FURNISHED BY CONTRACTOR**

8.01.00 Bidders may note that this is a contract inclusive of the scope as indicated elsewhere in the specification. Each of the plant and equipment shall be fully integrated, engineered and designed to perform in accordance with the technical specification. All engineering and technical services required to ensure a completely engineered plant shall be provided in respect of mechanical, electrical, control & instrumentation, civil & structural works as per the scope.

Each main and auxiliary equipment/item of the plant including instruments shall be assigned a unique tag number. The assignment of tag numbers shall be in accordance with KKS system. In all drawings/documents/data sheet etc. KKS tag number of the equipment/item/instrument etc. shall be indicated.

The Contractor shall furnish engineering data/drawings. in accordance with the schedule of information as specified in Technical Specification and Technical data sheet.

8.02.00 The number of copies/prints/CD-ROMs/manuals to be furnished for various types of documents is given in Annexure-I to this Part-C, Section-VI of the Technical Specification.

8.03.00 The documentation that shall be provided by the Contractor is indicated in thvarious sections of specification. This documentation shall include but not be limited to the following :

8.03.01

(a.) **BASIC ENGINEERING DOCUMENTATION**

Prior to commencement of the detailed engineering work, the Contractor shall furnish a Plant Definition Manual within 12 weeks from the date of the Notification of Award. This manual shall contain the following as a minimum:

i. System description of all the mechanical, electrical, control & instrumentation & civil systems.

ii. Technology scan for each system / sub-system & equipment.

iii. Selection of appropriate technology / schemes for various systems/ subsystems including techno-economic studies between various options.

iv. Optimization studies including thermal cycle optimization.

v. Sizing criteria of all the systems, sub-systems including various piping systems/ equipments/ structures/ equipment foundations alongwith all calculations justifying and identifying the sizing and the design margins.

vi. Schemes and Process & Instrumentation diagrams for the various systems/ sub-system with functional write-ups.

vii. Operation Philosophy and the control philosophy of the equipments / system covered under the scope.

viii. General Layout plan of the power station incorporating all facilities in Contractor's as well as those in the Employer's scope. This drawing shall also be furnished in the form of CD-ROMs to the Employer for engineering of areas not included in bidder's scope.

ix. Basic layouts and cross sections of the TG building (various floor elevations), and other areas included in the scope of thebidder.

x. Documentation in respect of Quality Assurance System as listed out elsewhere in this specification.

The successful bidder shall furnish within three (3) weeks from the date of Notification of Award, a list of contents of the Plant Definition Manual (PDMs) including techno-economic studies, which shall then be mutually discussed & finalised with the Employer.

(b) **DETAILED ENGINEERING DOCUMENTS**

i. General layout plan.

ii. Layouts, general arrangements, elevations and cross-sections drawings for all the equipment and facilities of the plant.

iii. Flow diagrams, Process & Instrumentation Diagrams alongwith write-up and system description.

iv. Start-up curves for turbine, for various start-ups, viz. cold, warm and hot start-up.

v. Piping isometric, composite layout and fabrication drawings.

vi. Piping engineering diagrams, pipe and fittings schedules, valve schedules, hanger and support schedules, insulation schedules.

vii. Technical data sheets for all bought out and manufactured items. Contractor shall use the NTPC specifications as a base for placement of orders on their sub-vendors.

viii. Detailed design calculations for components, system/sub-system, piping etc., wherever applicable including sizing calculations for all auxiliaries like BFPs, CEPs, Heaters/ Deaerators, Condensers, vacuum pumps etc.

ix. Transient, hydraulic and thermal stress analysis of piping and system wherever applicable & input and output data alongwith stress analysis isometrics showing nodes.

x. Thermal cycle information (heat balance diagrams, condenser and heat exchanger thermal calculations etc.).

xi. Characteristic Curves/ Performance Correction Curves. Hydraulic & Mechanical design calculations for condensers & heaters.

xii. Comprehensive list of all terminal points which interface with Employer's facilities giving details of location, terminal pressure, temperature, fluid handled & end connection details, forces, moments etc.

xiii. Power supply single line diagram, block logics, control schematics, electrical schematics, etc.

xiv. Protection system diagrams and relay settings.

xv. Interconnection diagrams.

xvi. Cable routing plan.

xvii. Instrument schedule, measuring point list, I/O list, Interconnection & wiring diagram, functional write-ups, installation drawings for field mounted instruments, logic diagrams, control schematics, wiring and tubing diagrams of panels and enclosures etc. Drawings for open loop and close loop controls (both hardware and software). Motor list and valve schedule including type of actuator etc.

xviii. Alarm and annunciation list / Sequence of Event (SOE) list and alarms & trip set points.

xix. Sequence and protection interlock schemes.

xx. Type test reports and power system stability study report.

xxi. Control system configuration diagrams.

xxii. Detailed DDCMIS system manuals

xxiii. Detailed flow chart for digital control system.

xxiv. Mimic diagram layout, Assignment for other application engg.

xxv. Civil & Structural works drawings and documents for all structures, facilities, foundations, underground and overground works and super-structural works as included in the scope of the Bidder.

xxvi. Model study reports wherever applicable.

xxvii. Functional & guarantee test procedures and test reports.

xxviii. Documentation in respect of Quality Assurance System as listed out elsewhere in this specification.

xxix. Documentation in respect of commissioning as listed out elsewhere in this specification.

The Contractor while submitting the above documents / drawings for approval / reference as the case may be, shall mark on each copy of submission the reference letter alongwith the date vide which the submissions are made.

8.03.02 **INSTRUCTION MANUALS**

The Contractor shall submit to the Employer, draft instruction manuals for all the equipments covered under the Contract by the end of one year from the date of his acceptance of the Letter of Award.The Instruction manuals shall contain full details required for erection, commissioning, operation and maintenance of each equipment. The manual shall be specifically compiled for this project. After finalization and approval of the Employer the Instruction Manuals shall be submitted as indicated in Annexure-I. The Contract shall not be considered to be completed for purposes of taking over until the final Instructions manuals have been supplied to the Employer. The Instruction Manuals shall comprise of the following.

(a.) **Erection Manuals**

The erection manuals shall be submitted atleast three (3) months prior to the commencement of erection activities of particular equipment/system. The erection manual should contain the following as a minimum.

a) Erection strategy.

b) Sequence of erection.

c) Erection instructions.

d) Critical checks and permissible deviation/tolerances.

e) List of tool, tackles, heavy equipments like cranes, dozers, etc.

f) Bill of Materials

g) Procedure for erection .

h) General safety procedures to followed during erection/installation.

i) Procedure for initial checking after erection.

j) Procedure for testing and acceptance norms.

k) Procedure / Check list for pre-commissioning activities.

l) Procedure / Check list for commissioning of the system.

m) Safety precautions to be followed in electrical supply distribution during erection

(b.) **Operation & Maintenance Manuals**

a) The manual shall be a two rim PVC bound stiff sided binder able to withstand constant usage or where a thicker type is required it shall have locking steel pins, the size of the manual shall not be larger than international size A3. The cover shall be printed with the Project Name, Services covered and Volume / Book number Each section of the manual shall be divided by a stiff divider of the same size as the holder. The dividers shall clearly state the section number and title. All written instructions within the manual not provided by the manufacturers shall be typewritten with a margin on the left hand side.

b) The arrangement and contents of O & M manuals shall be as follows :

1) Chapter 1 - Plant Description : To contain the following sections specific to the equipment/system supplied

(a) Description of operating principle of equipment / system with schematic drawing / layouts.

(b) Functional description of associated accessories / controls. Control interlock protection write up.

(c) Integrated operation of the equipment alongwith the intended system. (The is to be given by the supplier of the Main equipment by taking into account the operating instruction given by the associated suppliers).

(d) Exploded view of the main equipment, associated accessories and auxiliaries with description. Schematic drawing of the equipment alongwith its accessories and auxiliaries.

(e) Design data against which the plant performance will be compared.

(f) Master list of equipments, Technical specification of the equipment/ system and approved data sheets.

(g) Identification system adopted for the various components, (it will be of a simple process linked tagging system).

(h) Master list of drawings (as built drawing - Drawings to be enclosed in a separate volume).

2) Chapter 2.0 - Plant Operation: To contain the following sections specific to the equipment supplied

(a) Protection logics provided for the equipment alongwith brief philosophy behind the logic, Drawings etc.

(b) Limiting values of all protection settings.

(c) Various settings of annunciation/interlocks provided.

(d) Startup and shut down procedure for equipment alongwith the associated systems in step mode.

(e) Do's and Don'ts related to operation of the equipment.

(f) Safety precautions to be take during normal operation. Emergency instruction on total power failure condition/lubrication failure/any other conditions.

(g) Parameters to be monitored with normal value and limiting values.

(h) Equipment isolating procedures.

(i) Trouble shooting with causes and remedial measures.

(j) Routine testing procedure to ascertain healthiness of the safety devices alongwith schedule of testing.

(k) Routine Operational Checks, Recommended Logs and Records

(l) Change over schedule if more than one auxiliary for the same purpose is given.

(m) Preservation procedure on long shut down.

(n) System/plant commissioning procedure.

3) Chapter 3.0 - Plant Maintenance- To contain the following sections specific to the equipment supplied.

(a) Exploded view of each of the equipments. Drawings alongwith bill of materials including name, code no. & population.

(b) Exploded view of the spare parts and critical components with dimensional drawings (In case of Electronic cards, the circuit diagram to be given) and spare parts catalogue for each equipment.

(c) List of Special T/ P required for Overhauling /Trouble shooting including special testing equipment required for calibration etc.

(d) Stepwise dismantling and assembly procedure clearly specifying the tools to be used, checks to be made, records to be maintained etc. Clearance to be maintained etc.

(e) Preventive Maintenance schedules linked with running hours/calendar period alongwith checks to be carried out.

(f) Overhauling schedules linked with running hours/calendar period alongwith checks to be done.

(g) Long term maintenance schedules

(h) Consumables list alongwith the estimated quantity required during normal running and during maintenance like Preventive Maintenance and Overhauling.

(i) List of lubricants with their Indian equivalent, Lubrication Schedule including charts showing lubrication checking, testing and replacement procedure to be carried daily, weekly, monthly & at longer intervals to ensure trouble free operation and quantity required for complete replacement..

(j) Tolerance for fitment of various components.

(k) Details of sub vendors with their part no. in case of bought out items.

(l) List of spare parts with their Part No, total population, life expediency & their interchangeability with already supplied spares to NTPC.

(m) List of mandatory and recommended spare list along with manufacturing drawings, material specification & quality plan for fast moving consumable spares.

(n) Lead time required for ordering of spares from the equipment supplier, instructions for storage and preservation of spares.

(o) General information on the equipment such as modification carried out in the equipment from its inception, equipment population in the country / foreign country and list of utilities where similar equipments have been supplied.

8.03.03 After finalization and approval of the Employer, the O & M Manuals shall be submitted as indicated in Annexure-VI. The Contract shall not be considered to be completed for purposes of taking over until the final Instructions manuals (both erection and O & M manuals have been supplied to the Employer.

If after the commissioning and initial operation of the plant, the instruction manuals (Erection and /or O &M manuals) require modifications/additions/ changes, the same shall be incorporated and the updated final instruction manuals shall be submitted by the Contractor to the Employer for records and number of copies shall be as mentioned in Annexure-VI.

8.03.03 **PLANT HANDBOOK AND PROJECT COMPLETION REPORT**

(a.) PLANT HANDBOOK

The Contractor shall submit to the Employer a preliminary plant hand book preferably in A-4 size sheets which shall contain the design and performance data of various plants, equipments and systems covering the complete project including

1. Design and performance data.

2. Process & Instrumentation diagrams.

3. Single line diagrams.

4. Sequence & Protection Interlock Schemes.

5. Alarm and trip values.

6. Performance Curves.

7. General layout plan and layout of main plant building and auxiliary buildings

8. Important Do's & Don't's

The plant handbook shall be submitted within twelve (12) months from the date of award of contract. After the incorporation of Employer's comments, the final plant handbook complete in all respects shall be submitted three (3) months before start-up and commissioning activities.

(b.) **Project Completion Report**

The Contractor shall submit a Project Completion Report at the time of handing over the plant.

8.03.04 **DRAWINGS**

(a.) All documents submitted by the Contractor for Employer's review shall be in electronic form (soft copies) along with the desired number of hard copies as per Annexure-I of Part-C. The soft copies shall be uploaded by the vendors in c-folder, a web based system of NTPC ERP, for which a username and password will be alloted to the new vendor by NTPC.

Similarly, the vendor can download the drawings / documents, approved / commented by NTPC , through above site.
The soft copies of identified drawings / documents shall be in pdf format, whereas the attachements / reply to the submitted document(s) can be in .doc, .xls, .pdf, .dwg or .std formats.

(b.) Final copies of the approved drawings alongwith requisite number of hard copies shall be submitted as per Annexure-I of Part-C.

(c.) Contractor shall prepare the model of all the facilities located in TG building (including all facilities), and any other facility located in TG building area in an integrated & intelligent 3D software solution using rule-based, data centric 3D Design software with equipment drawings, data sheets, intelligent P&ID correlated with intelligent 3D Model, BOQ, schematics and logic diagrams

etc. attached to the respective equipment / systems in the aforesaid 3D model.

All piping layouts, equipment layouts, floor plans, ducting layout (A/C, Ventilation etc.), General Arrangement drawings of major buildings, structural arrangement drawings and RCC layout drawings shall necessarily be extracted from the aforesaid 3D model and submitted for employer's review along with the 3D review model to enable NTPC to review and approve these drawings.

Contractor shall prepare and provide 3D design review model (network ready, which shall include visual interference check, walk-through animation, video simulation for major equipment placement and removal, visual effect, photo realism etc.), which is extracted from intelligent 3D model and shall make a presentation of the same every 3 months from LOA to enable NTPC to review the progress of engineering or as and when required by employer.. After the completion of engineering of facilities covered under this package, the corresponding complete 3D review model shall be handed over to the employer for its reference.

(d.) All documents/text information shall be in latest version of MS Office/ MS Excel/ PDF Format as applicable.

(e.) All drawings submitted by the Contractor including those submitted at the time of bid shall be in sufficient detail indicating the type, size, arrangement, weight of each component for packing and shipment, the external connection, fixing arrangement required, the dimensions required for installation and interconnections with other equipments and materials, clearance and spaces required between various portions of equipment and any other information specifically requested in the drawing schedules.

(f.) Each drawing submitted by the Contractor (including those of subvendors) shall bear a title block at the right hand bottom corner with clear mention of the name of the Employer, the system designation, the specifications title, the specification number, the name of the Project, drawing number and revisions. If standard catalogue pages are submitted the applicable items shall be indicated therein. All titles, notings, markings and writings on the drawing shall be in English. All the dimensions should be in metric units.

(g.) The drawings submitted by the Contractor (or their subvendors) shall bear Employer's drawing number in addition to contractor's (their sub-vendor's) own drawing number. Employer's drawing numbering system shall be made available to the successful bidder so as to enable him to assign Employer's drawing numbers to the drawings to be submitted by him during the course of execution of the Contract.

Similarly, all the drawings/ documents submitted by the Contractor during detailed engineering stage shall be marked "FOR APPROVAL" or "FOR INFORMATION" prior to submission.

Further, space shall be identified on each drawing for approval stamp and electronic signature.

(j.) The furnishing of detailed engineering data and drawings by the Contractor shall be in accordance with the time schedule for the project. The review of these documents/ data/ drawings by the Employer will cover only general conformance of the data/ drawings/ documents to the specifications and contract, interfaces with the equipments provided by others and external connections & dimensions which might affect plant layout. The review by the Employer should not be construed to be a thorough review of all dimensions, quantities and details of the equipments, materials, any devices or items indicated or the accuracy of the information submitted. The review and/ or approval by the Employer / Project Manager shall not relieve the Contractor of any of his responsibilities and liabilities under this contract.

(k.) After the approval of the drawings, further work by the Contractor shall be in strict accordance with these approved drawings and no deviation shall be permitted without the written approval of the Employer.

(l.) All manufacturing, fabrication and execution of work in connection with the equipment / system, prior to the approval of the drawings, shall be at the Contractor's risk. The Contractor is expected not to make any changes in the design of the equipment /system, once they are approved by the Employer. However, if some changes are necessitated in the design of the equipment/system at a later date, the Contractor may do so, but such changes shall promptly be brought to the notice of the Employer indicating the reasons for the change and get the revised drawing approved again in strict conformance to the provisions of the Technical Specification.

(m.) Drawings shall include all installations and detailed piping layout drawings. Layout drawings for all piping of 65 mm and larger diameter shall be submitted for review/ approval of Employer prior to erection. Small diameter pipes shall however be routed as per site conditions in consultation with site authority / representative of Employer based on requirements of such piping indicated in approved / finalized Flow Scheme / Process & Instrumentation Diagrams and/or the requirements cropping up for draining & venting of larger diameter piping or otherwise after their erection as per actual physical condition for the entire scope of work of this package.

(n.) Assessing & anticipating the requirement and supply of all piping and equipment shall be done by the contractor well in advance so as not to hinder the progress of piping & equipment erection, subsequent system charging and its effective draining & venting arrangement as per site suitability.

(o.) As Built Drawings

After final acceptance of individual equipment / system by the Employer, the Contractor will update all original drawings and documents for the equipment / system to "as built" conditions and submit number of coppies as per **Annexure-I**.

(p.) Drawings must be checked by the Contractor in terms of its completeness, data adequacy and relevance with respect to Engineering schedule prior to submission to the Employer. In case drawings are found to be submitted without proper checking by the Contractor, the same shall not be reviewed and returned to the Contractor for re-submission. The contractor shall make a visit to site to see the existing facilities and understand the layout completely and collect all necessary data / drawings at site which are needed as an input to the engineering. The contractor shall do the complete engineering including interfacing and integration of all his equipment, systems & facilities within his scope of work as well as interface engineering & integration of systems, facilities, equipment & works under Employer's scope and submit all necessary drawings/ documents for the same.

(q.) The Contractor shall submit adequate prints of drawing / data / document for Employer's review and approval. The Employer shall review the drawings and return soft copy to the Contractor authorizing either to proceed with manufacture or fabrication, or marked to show changes desired. When changes are required, drawings shall be re-submitted promptly, with revisions clearly marked, for final review. Any delays arising out of the failure of the Contractor to submit/rectify and resubmit in time shall not be accepted as a reason for delay in the contract schedule.

(r.) All engineering data submitted by the Contractor after final process including review and approval by the Project Manager/ Employer shall form part of the contract documents and the entire works covered under these specification shall be performed in strict conformity with technical specifications unless otherwise expressly requested by the Project Manager in writing.

8.03.05 **e-Learning Package:**

CLAUSE NO.	GENERAL TECHNICAL REQUIREMENTS
	e-learning packages shall be supplied for the equipment / system for the following Steam Turbine Generator & auxiliaries along with associated electrical and C&I system.
8.03.05.01	**Steam Turbine Generator & Auxiliaries** Steam Turbine including stop valves, control valves, overload valves and cross over piping. Steam Turbine Auxiliary Systems including Quick Closing and Ordinary NRVs, Turbine gland sealing system, Lubricating oil system and its purification system, Centralised oil storage and its purification system, Control fluid and its purification system, governing and protection system, exhaust hood spray cooling system, drainage and vent system, turbine preservation system, HP/LP Bypass system. Generator and Auxiliary System including Generator, complete hydrogen cooling, carbon dioxide and nitrogen gas systems as applicable, complete seal oil system, complete water cooling system where applicable and complete excitation system. Condensing Plant including Condenser, Condenser air evacuation system and Condenser on load tube cleaning system as applicable. Drip Pump along with all accessories as applicable, Condensate Extraction Pumps along with all accessories, Deaerator level Control Station, Feed Water Heating Plant including Drain Cooler, low pressure heaters, deaerator and feed storage tank, high pressure heaters and associated accessories, Boiler Feed Pumps along with all accessories, Drive Turbine for Boiler Feed Pump along with all accessories, Feed regulating station, Make up system to Condenser, Gland Steam Condenser Recirculation System, Turbine Hall EOT Cranes and EOT Crane for Boiler Feed Pump as applicable.
8.03.05.02	These packages shall be installed on the Learning Management Server (LMS) of Power Management Institute (PMI) , NTPC located at Noida . The Engineer- In-Charge (EIC) for the e-learning modules shall be from PMI. 1. The objective of the e-Learning package consisting of courses for erection, commissioning, operation and maintenance of equipment / system as specified above is to facilitate the employees to have first hand information /requirement with respect to above activities for the supplied equipment /system. 2. The bidder shall submit e-learning courses each for erection, commissioning, operation and maintenance of each of the equipment / system supplied as above. a. The erection course(s) should include instructions on pre-checks, prerequisites, erection strategy, erection procedure etc. b. The commissioning course(s) should include instructions on recommissioning,commissioning, initial operation etc. c. The operation course(s) should include instructions on the permissive, interlocks, physical check ups, start up , shutdown and protections etc. d. The maintenance course(s) should include instructions on predictive, preventive, breakdown and overhauling. Depth of coverage of above courses shall be as specified for “Instruction Manuals” in above clauses. A literature on caution / safety while handling equipment / system for the above modules shall follow the description of the said equipment /system.

3. The e-Learning packages on equipment / system shall be installed by the vendor and shall be successfully test run in the presence of EIC or representative before acceptance by NTPC. The vendor will also give the master copy in form of Flash Drive/CD/DVD. The respective module for erection & commissioning shall be delivered and successfully test run at least three months before the scheduled start of the corresponding activity at site.

   The respective module for operation & maintenance shall be delivered and successfully test run at least three months before scheduled first synchronization of first unit.

4. **e-Learning course broad requirements:**

   a. The courses shall be web based and mobile based Application type.

      It shall run on all possible versions of web browser like Internet Explorer, Google Chrome, Firefox etc. on Laptop/Desktop and shall be Smartphone/Tablet/Mobile responsive. The Mobile responsive courses shall run on Android, Windows Mobile, Blackberry, iOS etc.

   b. The courses shall support liquid/fluid page layout so that the entire screen gets adjusted to PC, Laptop, Smartphone/Mobile, Tablet and any other display devices.

   c. Course content text shall be in English language and be associated with a voiceover in English language with Indian accent.

   d. Courses shall be SCORM (Sharable Content Object Reference Model) compliant, version 1.2 which is compatible with LMS at PMI.

   e. Each course shall have every physical and functional detail of the equipment / system supplied.

   f. Each of the e-Learning course shall be based on multiple web pages and mobile pages with multiple modules.

   g. There shall be option for self-assessment test after every course. In case the user doesn't opt for self assessment test the user shall be able to go to the next course. There shall be no restriction in no. of times for repeating the assessments. All correct answers along with the answers marked by the users shall be displayed at the end of test/quiz.

   h. If Java and Flash, as applicable are not available in the system to run the package, then there shall be a prompt message for updation of the same.

   i. Each course shall have a self-running interactive content with navigation buttons containing forward, backward, pause, bookmark and menu options in the course window.

j. The course shall contain chapter titled 'Introduction/overview' that explains the purpose of the course.

k. The course content shall contain descriptive text shall be factual, specific, terse, clearly worded, and simply illustrative, so that the user can understand it.

l. The system shall provide the user with the ability to select the information with a Cursor.

m. The course menu should contain table of content linked to concerned pages. The user shall be given the capability to access all of the functions available on the system through a menu system. This shall consist of active buttons, which shall control a hierarchy of pull down/pop up menus. Menu shall appear quickly and exist only while a selection is being made. The user shall be given the capability to position the cursor or pointer on the menu item and use pointer device such as mouse to activate the function.

n. Every course shall contain the 3D design/drawing/exploded view/360$_0$ turn around view of the equipment/system, textual description of the equipment/system and its functionality with video (as applicable), animation and audio.

o. The users shall be able to control audio sound level associated with the courses.

p. Drawings / text in the courses shall be scalable (Zoom In/ Out).'

q. The user shall have the capability to record a **bookmark** to mark displayed information for later recall, whenever he accesses the same course next time.

Notes:

1. e-learning Package of an equipment / system shall include e-learning courses for each of erection, commissioning, operation and maintenance of that equipment / system.

2. e-learning courses on erection, commissioning, operation and maintenance of an equipment / system shall include e-learning lessons/chapters/modules (as required) for erection, commissioning, operation and maintenance respectively of that equipment / system.

3. The vendor shall get the approval of one sample course from EIC before proceeding for further courses.

8.04.00 **Engineering Co-ordination Procedure**

CLAUSE NO.	GENERAL TECHNICAL REQUIREMENTS
8.04.01	The following principal coordinators will be identified by respective organizations at time of award of contract: NTPC Engineering Coordinator (NTPC EC) : Name : Designation : Address : a) Postal : b) Telegraphic / e-Mail : c) FAX : TELEPHONE : Contractor's/ Vendor's Engineering Coordinator (VENDOR EC): Name : Designation : Address : a) Postal : b) Telegraphic / e-Mail : c) FAX : TELEPHONE :
8.04.02	All engineering correspondence shall be in the name of above coordinators on behalf of the respective organizations.
8.04.03	Contractor's/Vendor's Drawing Submission and Approval Procedure: a) All data/information furnished by Vendor in the form of drawings/ documents/catalogues or in any other form for NTPC's information/ interface and or review and approval are referred by the general term "drawings". b) Not used

c) All drawings (including those of subvendor's) shall bear at the right hand bottom corner the 'title plate' with all relevant information duly filled in. The Contractor shall furnish this format to his subvendor along with his purchase order for subvendor's compliance.

d) Not used

e) The contractor shall make a visit to site to see the existing facilities and understand the layout completely and collect all necessary data / drawings at site which are needed as an input to the engineering. The contractor shall do the complete engineering including interfacing and integration of all his equipment, systems & facilities within his scope of work as well as interface engineering & integration of systems, facilities, equipment & works under Employer's scope and submit all necessary drawings/ documents for the same.

f) **Drawings must be checked by the Contractor in terms of its completeness, data adequacy and relevance with respect to engineering schedule prior to submission to the Employer. In case drawings are found to be submitted without proper endorsement for checking by the Contractor, the same shall not be reviewed and returned to the Contractor for re-submission.**

g) The Contractor shall submit adequate prints of drawing / data / document for Employer's review and approval. The drawings submitted by the Contractor/vendor shall be reviewed by NTPC and their comments shall be forwarded within three (3) weeks of receipt of drawings. Upon review of each drawing, depending on the correctness and completeness of the drawing, the same will be categorized and approval accorded in one of the following categories :

CATEGORY- I:	Approved
CATEGORY- II	Approved, subject to incorporation of comments/ modification as noted. Resubmit revised drawing incorporating the comments.
CATEGORY –III	Not approved. Resubmit revised drawings for approval after incorporating comments/ modification as noted.
CATEGORY -IV	For information and records.

h) Contractor shall resubmit the drawings approved under Category II, III & IVR within three (3) weeks of receipt of comments on the drawings, incorporating all comments. Every revision of the drawing shall bear a revision index wherein such revisions shall be highlighted in the form of description or marked up in the drawing identifying the same with relevant revision Number enclosed in a triangle (eg. 1, 2, 3 etc). Contractor shall not make any changes in the portions of the drawing other than those commented. If changes are required to be made in the portions already approved, the Contractor shall resubmit the drawing identifying the changes for Employer's review and approval. **Drawings resubmitted shall show clearly the portions where the same are revised marking the relevant revision numbers and Employer shall review only such revised portion of documents.**

i) In case, the Contractor/ Vendor does not agree with any specific comment, he shall furnish the explanation for the same to NTPC for consideration. In all such cases the Contractor shall necessarily enclose explanations along with the revised drawing (taking care of balance comments) to avoid any delay and/or duplication in review work.

j) It is responsibility of the Contractor/ Vendor to get all the drawings approved in the Category I & IV (as the case may be) and complete engineering activities within the agreed schedule. Any delay arising out of submission and modification of drawings shall not alter the contract completion schedule.

k) If Contractor/ Vendor fails to resubmit the drawings as per the schedule, construction work at site will not be held up and work will be carried out on the basis of comments furnished on previous issues of the drawing.

l) These comments will be taken care by the contractor while submitting the revised drawing.

The contractor shall use a single transmittal for drawings. Submission. This shall include transmittal numbers and date, number of copies being sent, names of the agencies to whom copies being sent, drawing number and titles, remarks or special notes if any etc.

8.05.00 **ENGINEERING PROGRESS AND EXCEPTION REPORT**

8.05.01 The Contractor shall submit every month an Engineering progress and Exception Report giving the status of each engineering information including

CLAUSE NO.	GENERAL TECHNICAL REQUIREMENTS
	(a.) A list of drawings/engineering information which remains unapproved for more than four (4) weeks after the date of first submission. (b.) Drawings which were not submitted as per agreed schedule.
8.05.02	The draft format for this report shall be furnished to the Employer within four (4) weeks of the award of the contract, which shall then be discussed and finalised with the Employer.
8.06.00	**TECHNICAL CO-ORDINATION MEETING**
8.06.01	The Contractor shall be called upon to organise and attend monthly Design/ Technical Co-ordination Meetings (TCMs) with the Employer/Employer's representatives and other Contractors of the Employer during the period of contract. The Contractor shall attend such meetings at his own cost at NEW DELHI / NOIDA or at mutually agreed venue as and when required and fully co-operate with such persons and agencies involved during the discussions.
8.06.02	The Contractor should note that Time is the essence of the contract. In order to expedite the early completion of engineering activities, the Contractor shall submit all drawings as per the agreed Engineering Information Submission Schedule.The drawings submitted by the Contractor will be reviewed by the Employer as far as practicable within three (3) weeks from the date of receipt of the drawing .The comments of the Employer shall then be discussed across the table during the above Technical Co-ordination Meeting (s) wherein best efforts shall be made by both sides to ensure the approval of the drawing.
8.06.03	The Contractor shall ensure availability of the concerned experts / consultants/ personnel who are empowered to take necessary decisions during these meetings. The Contractor shall be equipped with necessary tools and facilities so that the drawings/documents can be resubmitted after incorporating necessary changes and approved during the meeting itself.
8.06.04	Should any drawing remain unapproved for more than six (6) weeks after it's first submission, this shall be brought out in the monthly Engineering Progress and Exception Report with reasons thereof.
8.06.05	Any delays arising out of failure by the Contractor to incorporate Employer's comments and resubmit the same during the TCM shall be considered as a default and in no case shall entitle the Contractor to alter the Contract completion date.
8.07.00	**DESIGN IMPROVEMENTS**

The Employer or the Contractor may propose changes in the specification of the equipment or quality thereof and if the parties agree upon any such changes the specification shall be modified accordingly.

If any such agreed upon change is such that it affects the price and schedule of completion, the parties shall agree in writing as to the extent of any changing the price and/or schedule of completion before the Contractor proceeds with the change. Following such agreement, the provision thereof, shall be deemed to have been amended accordingly.

8.07.01 **Testing of major design features:**

The major design features of the system shall be conducted by the Contractor at the Contractor's works or any other place mutually agreed within six months from the date of LOA. These are the system function tests, which have a major impact on the detailed system design & finalization of important engineering documents like configuration, functional grouping, BOM etc., but do not require a fully engineered system for conductance. Bidder shall identify these features & include detailed test procedures in the bid, which shall be finalized during discussions with the bidder before award. The developments and any augmentation of standard features undertaken by the Bidder to fulfill the various specification requirements, shall be also be tested during these major design tests. This shall include but not be limited to the following.

a) System accuracy tests of DDCMIS for the various type of inputs identified in Part-B.

b) Loop reaction time for sample loops/ logics.

c) N/A.

d) Server changeover.

e) Various response times, having serious implication on operation & maintenance philosophy.

f) Duty cycle of controller/ HMIPIS with simulated load, representative of the final engineered load.

g) Unified HMI for DDCMIS as indicated in IIC-01, Scope of supply & services chapter of Part-A, Section-VI.

The results of the above tests, after its acceptance by the Employer, shall be properly documented and submitted to Employer. If any of the envisaged tests have

been carried out by Bidder in a previous NTPC project, then the same need not be specifically conducted by the Bidder for this project, provided it is clearly established by the Bidder & accepted by the Employer that there is no difference between the system offered for this project & the previous NTPC project w.r.t. the test. However, even in such a case, test report of the previous project shall be submitted by the Bidder as a part of MDFT (Major Design Feature Test) report.

8.07.02 **Demonstration of Application Engineering**

A) The Contractor shall prepare and submit typical implemented scheme in their system (Control system & HMI) on sample basis. The typical cases to be covered shall include but not be limited to the following.

(i) Logics/Loops:

a) Drive logics implementation for each type of binary drive along with its display in HMI.

b) Sequence implementation along with its display in HMI.

c) Single non-cascade controller implementation.

d) Cascade loop implementation.

e) Master slave implementation with different slave combination.

f) Temperature & pressure compensation for flow signals & pressure compensation for level signals as applicable.

(ii) HMI Functions:

a) LVS Annunciation.

b) Graphics.

c) HSR

d) Logs/Reports.

e) N/A.

B) The above typical cases shall be finalized with the Employer through Technical Co-ordination meetings.

After review and finalization of the typical cases, the implementation of each logic & control loop shall be carried out by the Contractor. After implementation of these

logics & loops, the Contractor shall test each logic/loop and record the observations in a format to be provided by the Employer and demonstrate to Employer at Employer premises during engineering finalization. Any modifications as a result of the demonstration shall be done and documented as part of the test report along with the final scheme. Similarly, HMI functions shall also be demonstrated by the Contractor at Employer premises & the results shall be documented as part of test report.

C) During the integrated testing at the Contractor's works, only sample checks shall be done by the Employer for the items covered in above application engineering demonstration.

8.08.00 **EQUIPMENT BASES**

A cast iron or welded steel base plate shall be provided for all rotating equipment which is to be installed on a concrete base, unless otherwise specifically agreed to by the Employer. Each base plate which support the unit and its drive assembly, shall be of a neat design with pads for anchoring the units, shall have a raised lip all around, and shall have threaded drain connections.

8.09.00 **PROTECTIVE GUARDS**

Suitable guards shall be provided for protection of personnel on all exposed rotating and/or moving machine parts. All such guards shall be designed for easy installation and removal for maintenance purpose.

8.10.00 **LUBRICANTS, SERVO FLUIDS AND CHEMICALS**

8.10.01 All the first fill and one year's topping requirements of consumables such asgreases, oil, lubricants, servo fluids / control fluids, gases (excluding H2, CO2 and N2 for Generator) and essential chemicals (excluding regeneration chemicals 33% HCL and 48% NaOH) etc. which will be required to put the equipment covered under the scope of specifications, into successful commissioning / initial operation and to establish completion of facilities shall be supplied by the Contractor. Suitable standard lubricants as available in India are desired. Efforts should be made to limit the variety of lubricants to minimum.

Bidder scope shall also include supply of H2 , CO 2 and N2 as applicable for the Generator till successful commisioning of the Generator.

Bidder shall also supply a quantity not less than 10% of the full charge of each variety of lubricants, servo fluids, gases, chemicals etc (as detailed above) which is expected to be utilised during the first year of operation. This additional quantity shall be supplied in separate Containers.

8.10.02	As far as possible lubricants marketed by the Indian Oil Corporation shall be used. The variety of lubricants shall be kept to a minimum possible. Detailed specifications for the lubricating oil, grease, gases, servo fluids, control fluids, chemicals etc. required for the complete plant covered herein shall be furnished. On completion of erection, a complete list of bearings/ equipment giving their location and identification marks shall be furnished to the Employer alongwith lubrication requirements.
8.11.00	**Lubrication**
8.11.01	Equipment shall be lubricated by systems designed for continuous operation. Lubricant level indicators shall be furnished and marked to indicate proper levels under both standstill and operating conditions.
8.12.00	**Material of Construction**
8.12.01	All materials used for the construction of the equipment shall be new and shall be in accordance with the requirements of this specification. Materials utilised for various components shall be those which have established themselves for use in such applications.
8.13.00	**RATING PLATES, NAME PLATES & LABELS**
8.13.01	Each main and auxiliary item of plant including instruments shall have permanently attached to it in a conspicuous position, a rating plate of non-corrosive material upon which shall be engraved manufacturer's name, equipment, type or serial number together with details of the ratings, service conditions under which the item of plant in question has been designed to operate, and such diagram plates as may be required by the Employer.
8.13.02	Each item of plant shall be provided with nameplate or label designating the service of the particular equipment. The inscriptions shall be approved by the Employer or as detailed in appropriate section of the technical specifications.
8.13.03	Such nameplates or labels shall be of white nonhygroscopic material with engraved black lettering or alternately, in the case of indoor circuit breakers, starters, etc. of transparent plastic material with suitably coloured lettering engraved on the back. The name plates shall be suitably fixed on both front and rear sides.
8.13.04	Items of plant such as valves, which are subject to handling, shall be provided with an engraved chromium plated nameplate or label with engraving filled with enamel.

The name plates for valves shall be marked in accordance with MSS standard SP-25 and ANSI B 16.34 as a minimum.

8.13.05 Hanger/ support numbers shall be marked on all pipe supports, anchors, hangers, snubbers and restraint assemblies. Each constant and variable spring support shall also have stamped upon it the designed hot and cold load which it is intended to support. Suitable scale shall also be provided to indicate load on support/hanger.

8.13.06 Valves, steam traps and strainers shall be identified by Employer's tag number of a metal tap permanently attached to non pressure parts such as the yoke by a stainless steel wire. The direction of flow shall also be marked on the body.

8.13.07 Safety and relief valves shall be provided with the following :

(a.) Manufacturer's identification.

(b.) Nominal inlet and outlet sizes in mm.

(c.) Set pressure in Kg/cm² (abs).

(d.) Blowdown and accumulation as percentage of set pressure.

(e.) Certified capacity in Kg of saturated steam per hour or in case of liquid certified capacity in litres of water per minute.

8.13.08 All such plates, instruction plates, etc. shall be bilingual with Hindi inscription first, followed by English. Alternatively, two separate plates one with Hindi and the other with English inscriptions may be provided.

8.13.09 All segregated phases of conductors or bus ducts, indoor or outdoor, shall be provided with coloured phase plates to clearly identify the phase of the system

8.14.00 **TOOLS AND TACKLES**

The Contractor shall supply with the equipment one complete set of all special tools and tackles and other instruments required for the erection, assembly, disassembly and proper maintenance of the plant and equipment and systems (including software). These special tools will also include special material handling equipment, jigs and fixtures for maintenance and calibration / readjustment, checking and measurement aids etc. A list of such tools and tackles shall be submitted by the Bidder alongwith the offer.

The price of each tool / tackle shall be deemed to have been included in the total bid price. These tools and tackles shall be separately packed and sent to site. The Contractor shall also ensure that these tools and tackles are not used by him during erection, commissioning and initial operation. For this period the Contractor should bring his own tools and tackles. All the tools and tackles shall be of reputed make acceptable to the Employer.

8.15.00 **WELDING**

8.15.01 If the manufacturer has special requirements relating to the welding procedures for welds at the terminals of the equipments to be performed by others the requirements shall be submitted to the Employer in advance of commencement of erection work.

8.16.00 **COLOUR CODE FOR ALL EQUIPMENTS/ PIPINGS/ PIPE SERVICES**

8.16.01 All equipment/ piping/ pipe services are to be painted by the Contractor in accordance with Employer's standard colour coding scheme, which will be furnished to the Contractor during detailed engineering stage.

8.17.00 **PROTECTION AND PRESERVATIVE SHOP COATING**

8.18.00 **PROTECTION**

All coated surfaces shall be protected against abrasion, impact, discoloration and any other damages. All exposed threaded portions shall be suitably protected with either metallic or a nonmetallic protection device. All ends of all valves and pipings and conduit equipment connections shall be properly sealed with suitable devices to protect them from damage. The parts which are likely to get rusted, due to exposure to weather, should also be properly treated and protected in a suitable manner. All primers/paints/coatings shall take into account the hot humid, corrosive & alkaline, subsoil or overground environment as the case may be. The requirements for painting specification shall be complied with as detailed out in Part-A & B of the Technical Specification.

8.19.00 **PRESERVATIVE SHOP COATING**

All exposed metallic surfaces subject to corrosion shall be protected by shop application of suitable coatings. All surfaces which will not be easily accessible after the shop assembly, shall be treated beforehand and protected for the life of the equipment. All surfaces shall be thoroughly cleaned of all mill scales, oxides and other coatings and prepared in the shop. The surfaces that are to be finish-painted

after installation or require corrosion protection until installation, shall be shop painted as per the requirement covered in the relevant part of the Technical Specification.

Transformers and other electrical equipments if included shall be shop finished with one or more coats of primer and two coats of high grade resistance enamel. The finished colors shall be as per manufacturer's standards, to be selected and specified by the Employer at a later date.

8.19.01 Shop primer for all steel surfaces which will be exposed to operating temperature below 95 degrees Celsius shall be selected by the Contractor after obtaining specific approval of the Employer regarding the quality of primer proposed to be applied. Special high temperature primer shall be used on surfaces exposed to temperature higher than 95 degrees Celsius and such primer shall also be subject to the approval of the Employer.

8.19.02 All other steel surfaces which are not to be painted shall be coated with suitable rust preventive compound subject to the approval of the Employer.

8.19.03 All piping shall be cleaned after shop assembly by shot blasting or other means approved by the Employer. Lube oil piping or carbon steel shall be pickled.

8.19.04 Painting for Civil structures shall be done as specified under technical requirements on civil works in relevant part of this specifications.

9.00.00 **QUALITY ASSURANCE PROGRAMME**

9.01.00 The Contractor shall adopt suitable quality assurance programme to ensure that the equipment and services under the scope of contract whether manufactured or performed within the Contractor's works or at his sub-contractor's premises or at the Employer's site or at any other place of work are in accordance with the specifications. Such programmes shall be outlined by the Contractor and shall be finally accepted by the Employer/authorised representative after discussions before the award of the contract. The QA programme shall be generally in line with ISO-9001.A quality assurance programme of the contractor shall generally cover the following:

(a.) His organisation structure for the management and implementation of the proposed quality assurance programme

(b.) Quality System Manual

(c.) Design Control System

(d.) Documentation and Data Control System

(e.) Qualification data for bidder's key personnel.

(f.) The procedure for purchase of materials, parts, components and selection of sub-contractor's services including vendor analysis, source inspection, incoming raw-material inspection, verification of materials purchased etc.

(g.) System for shop manufacturing and site erection controls including process, fabrication and assembly.

(h.) Control of non-conforming items and system for corrective actions and resolution of deviations.

(i.) Inspection and test procedure both for manufacture and field activities.

(j.) Control of calibration and testing of measuring testing equipment.

(k.) System for Quality Audits.

(l.) System for identification and appraisal of inspection status.

(m.) System for authorising release of manufactured product to the Employer.

(n.) System for handling, storage and delivery.

(o.) System for maintenance of records, and

(p.) Quality plans for manufacturing and field activities detailing out the specific quality control procedure adopted for controlling the quality characteristics relevant to each item of equipment/component.

9.02.00 **GENERAL REQUIREMENTS - QUALITY ASSURANCE**

9.02.01 All materials, components and equipment covered under this specification shall be procured, manufactured, erected, commissioned and tested at all the stages, as per a comprehensive Quality Assurance Programme. An indicative programme of inspection/tests to be carried out by the contractor for some of the major items is given in the respective technical specification which shall be finalised giving due consideration to the manufacturer's standard and proven practices being followed. This is, however, not intended to form a comprehensive programme as it is the contractor's responsibility to draw up and implement such programme duly approved by the Employer. The detailed Quality Plans for manufacturing and field activities

	shall be drawn up by the Bidder and will be submitted to Employer for approval. Schedule of finalisation of such quality plans will be finalised before award. Monthly progress reports on MQP/FQP submission/approval shall be furnished on enclosed format No. QS-01-QAI-P-02/F1.
9.02.02	Manufacturing Quality Plan will detail out for all the components and equipment, various tests/inspection, to be carried out as per the requirements of this specification and standards mentioned therein and quality practices and procedures followed by Contractor's/ Sub-contractor's/ sub-supplier's Quality Control Organisation, the relevant reference documents and standards, acceptance norms, inspection documents raised etc., during all stages of materials procurement, manufacture, assembly and final testing/performance testing. The Quality Plan shall be submitted on electronic media through c-folders, a web based system of NTPC ERP in addition to hard copy, for review and approval. After approval the same shall be submitted in compiled form on CD-ROM.
9.02.03	Field Quality Plans will detail out for all the equipment, the quality practices and procedures etc. to be followed by the Contractor's "Site Quality Control Organisation", during various stages of site activities starting from receipt of materials/equipment at site.
9.02.04	The Bidder shall also furnish copies of the reference documents/plant standards/acceptance norms/tests and inspection procedure etc., as referred in Quality Plans along with Quality Plans. These Quality Plans and reference documents/standards etc. will be subject to Employer's approval without which manufacturer shall not proceed. These approved documents shall form a part of the contract. In these approved Quality Plans, Employer shall identify customer hold points (CHP), i.e. test/checks which shall be carried out in presence of the Employer's Project Manager or his authorised representative and beyond which the work will not proceed without consent of Employer in writing. All deviations to this specification, approved quality plans and applicable standards must be documented and referred to Employer along with technical justification for approval and dispositioning.
9.02.05	No material shall be despatched from the manufacturer's works before the same is accepted, subsequent to predespatch final inspection including verification of records of all previous tests/inspections by Employer's Project Manager/Authorised representative and duly authorised for despatch by issuance of Material Despatch Clearance Certificate (MDCC).
9.02.06	All material used for equipment manufacture including casting and forging etc. shall be of tested quality as per relevant codes/standards. Details of results of the tests conducted to determine the mechanical properties; chemical analysis and details of

	heat treatment procedure recommended and actually followed shall be recorded on certificates and time temperature chart. Tests shall be carried out as per applicable material standards and/or agreed details.
9.02.07	The contractor shall submit to the Employer Field Welding Schedule for field welding activities in the enclosed format No.: QS-01-QAI-P-02/F2. The field welding schedule shall be submitted to the Employer along with all supporting documents, like welding procedures, heat treatment procedures, NDT procedures etc. at least ninety days before schedule start of erection work at site.
9.02.08	All welding and brazing shall be carried out as per procedure drawn and qualified in accordance with requirements of ASME Section IX/BS-4870 or other International equivalent standard acceptable to the Employer. All welding/brazing procedures shall be submitted to the Employer or its authorised representative for approval prior to carrying out the welding/brazing.
9.02.09	All brazers, welders and welding operators employed on any part of the contract either in Contractor's/sub-contractor's works or at site or elsewhere shall be qualified as per ASME Section-IX or BS-4871 or other equivalent International Standards acceptable to the Employer.
9.02.10	Welding procedure qualification & Welder qualification test results shall be furnished to the Employer for approval. However, where required by the Employer, tests shall be conducted in presence of Employer/authorised representative.
9.02.11	For all IBR pressure parts and high pressure piping welding, the latest applicable requirements of the IBR (Indian Boiler Regulations) shall also be essentially complied with. However, for other piping system ASME B31.1 or other relevant code as applicable shall be followed. Similarly, any other statutory requirements for the equipment/systems shall also be complied with. On all back-gauged welds MPI/LPI shall be carried before seal welding.
9.02.12	Unless otherwise proven and specifically agreed with the Employer, welding of dissimilar materials and high alloy materials shall be carried out at shop only.
9.02.13	No welding shall be carried out on cast iron components for repair.
9.02.14	All the heat treatment results shall be recorded on time temperature charts and verified with recommended regimes.
9.02.15	All non-destructive examination shall be performed in accordance with written procedures as per International Standards, The NDT operator shall be qualified as per SNT-TC-IA (of the American Society of non-destructive examination) / EN /

	Equivalent. NDT shall be recorded in a report, which includes details of methods and equipment used, result/evaluation, job data and identification of personnel employed and details of co-relation of the test report with the job. All plates of thickness above 40mm & all bar stock/Forging above 40mm dia shall be ultrasonically tested. For pressure parts, plate of thickness equal to or above 25mm shall be ultrasonically tested.
9.02.16	The Contractor shall list out all major items/ equipment/ components to be manufactured in house as well as procured from sub-contractors (BOI). All the sub-contractor proposed by the Contractor for procurement of major bought out items including castings, forging, semi-finished and finished components/equipment etc., list of which shall be drawn up by the Contractor and finalised with the Employer, shall be subject to Employer's approval. The contractor's proposal shall include vendor's facilities established at the respective works, the process capability, process stabilization, QC systems followed, experience list, etc. along with his own technical evaluation for identified sub-contractors enclosed and shall be submitted to the Employer for approval within the period agreed at the time of pre-awards discussion and identified in "DR" category prior to any procurement. Monthly progress reports on sub-contractor detail submission / approval shall be furnished on enclosed on format no. QS-01-QAI-P-02/F1. Such vendor approval shall not relieve the contractor from any obligation, duty or responsibility under the contract.
9.02.17	For components/equipment procured by the contractors for the purpose of the contract, after obtaining the written approval of the Employer, the contractor's purchase specifications and inquiries shall call for quality plans to be submitted by the suppliers. The quality plans called for from the sub-contractor shall set out, during the various stages of manufacture and installation, the quality practices and procedures followed by the vendor's quality control organisation, the relevant reference documents/standards used, acceptance level, inspection of documentation raised, etc. Such quality plans of the successful vendors shall be finalised with the Employer and such approved Quality Plans shall form a part of the purchase order/contract between the Contractor and sub-contractor. With in three weeks of the release of the purchase orders /contracts for such bought out items /components, a copy of the same without price details but together with the detailed purchase specifications, quality plans and delivery conditions shall be furnished to the Employer on the monthly basis by the Contractor along with a report of the Purchase Order placed so far for the contract.
9.02.18	Employer reserves the right to carry out quality audit and quality surveillance of the systems and procedures of the Contractor's or their sub-contractor's quality management and control activities. The contractor shall provide all necessary assistance to enable the Employer carry out such audit and surveillance.

9.02.19 The contractor shall carry out an inspection and testing programme during manufacture in his work and that of his sub-contractor's and at site to ensure the mechanical accuracy of components, compliance with drawings, conformance to functional and performance requirements, identity and acceptability of all materials parts and equipment. Contractor shall carry out all tests/inspection required to establish that the items/equipment conform to requirements of the specification and the relevant codes/standards specified in the specification, in addition to carrying out tests as per the approved quality plan.

9.02.20 Quality audit/surveillance/approval of the results of the tests and inspection will not, however, prejudice the right of the Employer to reject the equipment if it does not comply with the specification when erected or does not give complete satisfaction in service and the above shall in no way limit the liabilities and responsibilities of the Contractor in ensuring complete conformance of the materials/equipment supplied to relevant specification, standard, data sheets, drawings, etc.

9.02.21 For all spares and replacement items, the quality requirements as agreed for the main equipment supply shall be applicable.

9.02.22 Repair/rectification procedures to be adopted to make the job acceptable shall be subject to the approval of the Employer/ authorised representative.

9.02.23 Environmental Stress Screening

All solid state electronic system / equipment / sub assembly shall be free from infant mortile components. For establishing the compliance to this requirement, the contractor / sub - contractor should meet the following.

1) The Contractor / Sub - contractor shall furnish the established procedure being followed for eliminating infant mortile components. The procedure followed by the Contractor / Sub - contractor should be substantiated along with the statistical figures to validate the procedure being followed. The necessary details as required under this clause shall be furnished at the stage of QP finalization.

OR

In case the Contractor / Sub - contractor do not have any established procedure to eliminate infant mortile components then two or 10% which ever is less, most densely populated Panels shall be tested for Elevated Temperature Cycle Test as per the following procedure.

Elevated Temperature Test Cycle

During the elevated temperature test which shall be for 48 hours, the ambient temperature shall be maintained at 50° C. The equipment shall be interconnected with devices and kept under energized conditions so as to repeatedly perform all operations it is expected to perform in actual service with load on various components being equal to those which will be experienced in actual service.

During the elevated temperature test the cubicle doors shall be closed (or shall be in the position same as they are supposed to be in the field) and inside temperature in the zone of highest heat dissipating components / modules shall be monitored. The temperature rise inside the cubicle should not exceed 10° C above the ambient temperature at 50° C.

In case of any failure during the test cycle, the further course of action should be mutually discussed for demonstrating the intent of the above requirement.

2) Burn in Test Cycle

The test shall be conducted on all the panels fully assembled and wired including the panels having undergone the above mentioned elevated temperature test.

The period of Burn in Test Cycle shall be 120 hrs and process shall be similar to the elevated temperature test as above except that the temperature shall be reduced to the ambient temperature prevalent at that time.

During the above tests, the process I/O and other load on the system shall be simulated by simulated inputs and in the case of control systems; the process which is to be controlled shall also be simulated. Testing of individual components or modules shall not be acceptable.

During the Burn in Test the cubicle doors shall be closed (or shall be in the position same as they are supposed to be in the field) and inside temperature in the zone of highest heat dissipating components / modules shall be monitored. The temperature rise inside the cubicle should not exceed 10° C above the ambient temperature.

The Contractor / Sub-contractor shall carry out routine test on 100% item at contractor / sub-contractor's works. The quantum of check / test for routine & acceptance test by employer shall be generally as per criteria / sampling plan defined in referred standards. Wherever standards have not been mentioned

quantum of check / test for routine / acceptance test shall be as agreed during detailed engineering stage.

9.03.00 **QA DOCUMENTATION PACKAGE**

The Contractor shall be required to submit the QA Documentation in two hard copies and two CD ROMs, as identified in respective quality plan with tick (✓) mark.

9.03.01 Each QA Documentation shall have a project specific Cover Sheet bearing name & identification number of equipment and including an index of its contents with page control on each document.

The QA Documentation file shall be progressively completed by the Supplier's sub-supplier to allow regular reviews by all parties during the manufacturing.

The final quality document will be compiled and issued at the final assembly place of equipment before despatch. However CD-Rom may be issued not later than three weeks.

9.03.02 Typical contents of QA Documentation is as below:-

(a.) Quality Plan

(b.) Material mill test reports on components as specified by the specification and approved Quality Plans.

(c.) Manufacturer / works test reports/results for testing required as per applicable codes and standard referred in the specification and approved Quality Plans.

(d.) Non-destructive examination results /reports including radiography interpretation reports. Sketches/drawings used for indicating the method of traceability of the radiographs to the location on the equipment.

(e.) Heat Treatment Certificate/Record (Time- temperature Chart)

(f.) All the accepted Non-conformance Reports (Major/Minor) / deviation, including complete technical details / repair procedure).

(g.) CHP / Inspection reports duly signed by the Inspector of the Employer and Contractor for the agreed Customer Hold Points.

(h.) Certificate of Conformance (COC) wherever applicable.

(i.) MDCC

9.03.03 NOT USED.

9.03.04 NOT USED.

9.03.05 Similarly, the contractor shall be required to submit two sets (two hard copies and two CD ROMs), containing QA Documentation pertaining to field activities as per Approved Field Quality Plans and other agreed manuals/ procedures, prior to commissioning of individual system.

9.03.06 Before despatch / commissioning of any equipment, the Supplier shall make sure that the corresponding quality document or in the case of protracted phased deliveries, the applicable section of the quality document file is completed. The supplier will then notify the Inspector regarding the readiness of the quality document (or applicable section) for review.

(a.) If the result of the review carried out by the Inspector is satisfactory, the Inspector shall stamp the quality document (or applicable section) for release.

(b.) If the quality document is unsatisfactory, the Supplier shall endeavor to correct the incompleteness, thus allowing to finalize the quality document (or applicable section) by time compatible with the requirements as per contract documents. When it is done, the quality document (or applicable section) is stamped by the Inspector.

(c.) If a decision is made for despatch, whereas all outstanding actions cannot be readily cleared for the release of the quality document by that time, the supplier shall immediately, upon shipment of the equipment, send a copy of the quality document Review Status signed by the Supplier Representative to the Inspector and notify of the committed date for the completion of all outstanding actions & submission. The Inspector shall stamp the quality document for applicable section when it is effectively completed. The submission of QA documentation package shall not be later than 3 weeks after the despatch of equipment.

9.03.07 **TRANSMISSION OF QA DOCUMENTATION**

On release of QA Documentation by Inspector, one set of quality document shall be forwarded to Corporate Quality Assurance Department and other set to respective Project Site of Employer.

For the particular case of phased/part derivatives of equipment, the complete quality document of that particular equipment to the Employer shall be issued not later than 3 weeks after the date of the last delivery of equipment.

9.04.00 **Project Manager's Supervision**

9.04.01 To eliminate delays and avoid disputes and litigation, it is agreed between the parties to the Contract that all matters and questions shall be referred to the Project Manager and without prejudice to the provisions of 'Arbitration' clause in Section GCC of Vol.I, the Contractor shall proceed to comply with the Project Manager's decision.

9.04.02 The work shall be performed under the supervision of the Project Manager. The scope of the duties of the Project Manager pursuant to the Contract, will include but not be limited to the following:

(a.) Interpretation of all the terms and conditions of these documents and specifications:

(b.) Review and interpretation of all the Contractor's drawing, engineering data, etc:

(c.) Witness or his authorised representative to witness tests and trials either at the manufacturer's works or at site, or at any place where work is performed under the contract :

(d.) Inspect, accept or reject any equipment, material and work under the contract:

(e.) Issue certificate of acceptance and/or progressive payment and final payment certificates

(f.) Review and suggest modifications and improvement in completion schedules from time to time, and

(g.) Supervise Quality Assurance Programme implementation at all stages of the works.

9.05.00 **INSPECTION, TESTING AND INSPECTION CERTIFICATES**

9.05.01 The word 'Inspector' shall mean the Project Manager and/or his authorised representative and/or an outside inspection agency acting on behalf of the Employer

CLAUSE NO.	GENERAL TECHNICAL REQUIREMENTS
	to inspect and examine the materials and workmanship of the works during its manufacture or erection.
9.05.02	The Project Manager or his duly authorised representative and/or an outside inspection agency acting on behalf of the Employer shall have access at all reasonable times to inspect and examine the materials and workmanship of the works during its manufacture or erection and if part of the works is being manufactured or assembled on other premises or works, the Contractor shall obtain for the Project Manager and for his duly authorised representative permission to inspect as if the works were manufactured or assembled on the Contractor's own premises or works.
9.05.03	The Contractor shall give the Project Manager/Inspector ten (10) working days written notice of any material being ready for testing. Such tests shall be to the Contractor's account except for the expenses of the Inspector's. The Project Manager/Inspector, unless the witnessing of the tests is virtually waived and confirmed in writing, will attend such tests within ten (10) working days of the date on which the equipment is noticed as being ready for test/inspection failing which the contractor may proceed with test which shall be deemed to have been made in the inspector's presence and he shall forthwith forward to the inspector duly certified copies of test reports in two (2) copies.
9.05.04	The Project Manager or Inspector shall within ten (10) working days from the date of inspection as defined herein give notice in writing to the Contractor, or any objection to any drawings and all or any equipment and workmanship which is in his opinion not in accordance with the contract. The Contractor shall give due consideration to such objections and shall either make modifications that may be necessary to meet the said objections or shall inform in writing to the Project Manager/Inspector giving reasons therein, that no modifications are necessary to comply with the contract.
9.05.05	When the factory tests have been completed at the Contractor's or sub-contractor's works, the Project Manager /Inspector shall issue a certificate to this effect ten (10) working days after completion of tests but if the tests are not witnessed by the Project Manager /Inspectors, the certificate shall be issued within ten (10) working days of the receipt of the Contractor's test certificate by the Project Manager /Inspector. Project Manager /Inspector to issue such a certificate shall not prevent the Contractor from proceeding with the works. The completion of these tests or the issue of the certificates shall not bind the Employer to accept the equipment should it, on further tests after erection be found not to comply with the contract.
9.05.06	In all cases where the contract provides for tests whether at the premises or works of the Contractor or any sub-contractor, the Contractor, except where otherwise specified shall provide free of charge such items as labour, material, electricity, fuel,

	water, stores, apparatus and instruments as may be reasonably demanded by the Project Manager /Inspector or his authorised representatives to carry out effectively such tests on the equipment in accordance with the Contractor and shall give facilities to the Project Manager/Inspector or to his authorised representative to accomplish testing.
9.05.07	The inspection by Project Manager / Inspector and issue of Inspection Certificate thereon shall in no way limit the liabilities and responsibilities of the Contractor in respect of the agreed Quality Assurance Programme forming a part of the contract.
9.05.08	To facilitate advance planning of inspection in addition to giving inspection notice as specified at clause no 9.05.03- of this chapter, the Contractor shall furnish quarterly inspection programme indicating schedule dates of inspection at Customer Hold Point and final inspection stages. Updated quarterly inspection plans will be made for each three consecutive months and shall be furnished before beginning of each calendar month.
9.05.09	All inspection, measuring and test equipment used by contractor shall be calibrated periodically depending on its use and criticality of the test/measurement to be done. The Contractor shall maintain all the relevant records of periodic calibration and instrument identification, and shall produce the same for inspection by NTPC. Wherever asked specifically, the contractor shall re-calibrate the measuring/test equipment in the presence of Project Manager / Inspector.
9.06.00	**ASSOCIATED DOCUMENT FOR QUALITY ASSURANCE PROGRAMME:**
9.06.01	List of items requiring Quality Plan & Sub-supplier approval. Format No. QS-01-QAI-P-01/F3-R0
9.06.02	Status of Quality Plan and Sub-supplier approval Format No. QS-01-QAI-P-02/F1-R0
9.06.03	Field Welding Schedule Format No.: QS-01-QAI-P-02/F2-R0
9.06.04	Manufacturing Quality Plan Format No.: QS-01-QAI-P-09/F1-R0
9.06.05	Field Quality Plan Format No.: QS-01-QAI-P-09/F2-R0 The above formats are enclosed as Annexure-III to VII
10.00.00	**PRE-COMMISSIONING AND COMMISSIONING FACILITIES**
	(a.) As soon as the facilities or part thereof has been completed operationally and structurally and before start-up, each item of the equipment and systems

forming part of facilities shall be thoroughly cleaned and then inspected jointly by the Employer and the Contractor for correctness of and completeness of facility or part thereof and acceptability for initial pre-commissioning tests, commissioning and start-up at Site. The list of pre-commissioning tests to be performed shall be as mutually agreed and included in the Contractor's quality assurance programme as well as those included in Part-D, Section-VI and elsewhere in the Technical Specifications.

(b.) The Contractor's pre-commissioning/ commissioning/start-up engineers, specially identified as far as possible, shall be responsible for carrying out all the pre-commissioning tests at Site. On completion of inspection, checking and after the pre-commissioning tests are satisfactorily over, the commissioning of the complete facilities shall be commenced during which period the complete facilities, equipments shall be operated integral with sub-systems and supporting equipment as a complete plant.

(c.) All piping system shall be flushed, steam blown, air blown as required and cleanliness demonstrated using acceptable industry standards. Procedures to accomplish this work shall be submitted for approval to the Employer six months prior to the respective implementations. The Employer will approve final verification of cleanliness.

(d.) The time consumed in the inspection and checking of the units shall be considered as a part of the erection and installation period.

(e.) The check outs during the pre - commissioning period should be programmed to follow the construction completion schedule. Each equipment/system, as it is completed in construction and turned over to Employer's commissioning (start-up) Engineer(s), should be checked out and cleaned. The checking and inspection of individual systems should then follow a prescribed schedule to be agreed by the Employer.

(f.) The Contractor during initial operation and performance testing shall conduct vibration testing to determine the 'base line' of performance of all plant rotating equipment. These tests shall be conducted when the equipment is running at the base load, peak load as well as lowest sustained operating condition as far as practicable.

(g.) Contractor shall furnish the commissioning organization chart for review & acceptance of employer at least eighteen months prior to the schedule date of synchronization of 1st unit. The chart should contain:

(1.) Biodata including experience of the Commissioning Engineers.

(2.) Role and responsibilities of the Commissioning Organisation members.

(3.) Expected duration of posting of the above Commissioning Engineers at site.

10.02.00 **Initial Operation**

a) On completion of all pre-commissioning activities / tests and as a part of commissioning the complete facilities shall be put on 'Initial Operation' during which period all necessary adjustments shall be made while operating over the full load range enabling the facilities to be made ready for the Guarantee Tests.

b) The 'Initial Operation' of the complete facility as an integral unit shall be conducted for 720 continuous hours. During the period of initial operation of 720 hours, the unit shall operate continuously at full rated load for a period not less than 72 hours.

The Initial Operation shall be considered successful, provided that each item/ part of the facility can operate continuously at the specified operating characteristics, for the period of Initial Operation with all operating parameters within the specified limits and at or near the predicted performance of the equipment/ facility.

The Contractor shall intimate the Employer about the commencement of initial operation and shall furnish adequate notice to the Employer in this respect.

c) Any loss of generation due to constraints attributable to the Employer shall be construed as Deemed Generation.

In the event of test interruptions as a result of Force Majeure or Employer-Caused-Delay during Initial Operation test, where.

(i) The total cumulative interrupted time during the test is more than twenty-four (24) hours.

(ii) The total number of interruptions during the test is more than four (4).

The test shall not be deemed a successful Initial Operation Test.

The interrupted test resulting from Force Majeure or Employer-Caused-Delay shall be extended by an amount of time equal to the cumulative length of the interruptions, including time to return to steady-state operation; the test data for the period of interruptions shall be excluded from analysis; and the test data that were collected both before and after the interruptions shall be included in the analysis.

d) An Initial Operation report comprising of observations and recordings of various parameters to be measured in respect of the above Initial Operation shall be prepared by the Contractor. This report, besides recording the details of the various observations during initial operation shall also include the dates of start and finish of the Initial Operation and shall be signed by the representatives of both the parties. The report shall have sheets, recording all the details of interruptions occurred, adjustments made and any minor repairs done during the Initial Operation. Based on the observations, necessary modifications/repairs to the plant shall be carried out by the Contractor to the full satisfaction of the Employer to enable the latter to accord permission to carry out the Guarantee tests on the facilities. However, minor defects which do not endanger the safe operation of the equipment, shall not be considered as reasons for with holding the aforesaid permission.

(g) **Grid Restriction**

Any loss in generation in terms of power (KW) or energy (KWH) during Initial operation Test due to grid restrictions shall be treated as deemed generation. however, the total cumulative deemed generation shall not exceed 5% of the total generation during the test period failing which the test shall be extended to limit the deemed generation to 5% of the total generation.

11.00.00 **GUARANTEE TESTS**

a) The final test as to prove the Functional Guarantees shall be conducted at Site by the Contractor in presence of the Employer. The contractor's Commissioning, Start-up Engineer shall make the unit ready to conduct such test before start of initial operation. Such test shall be conducted along with Initial Operations.

b) These tests shall be binding on both the parties of the Contract to determine compliance of the equipment with the functional guarantee.

c) For performance/ demonstration tests instrumentations, accuracy class shall be as per specified test codes. The numbers and location of the instruments shall be as per the specified test codes. In addition the values of parameters

shall be logged from the information system provided under Employer's Distributed Digital Control Monitoring and Information system. Test will be conducted at specified load points.

d) Any special equipment, tools and tackles required for the successful completion of the Guarantee Tests shall be provided by the Contractor, free of cost.

e) The Guarantee tests and specific tests to be conducted on equipments have been brought out in detail elsewhere in the specification.

12.00.00 **TAKING OVER**

Upon successful completion of Initial Operations and all the tests conducted to the Employer's satisfaction, the Employer shall issue to the Contractor a Taking over Certificate as a proof of the final acceptance of the equipment. Such certificate shall not unreasonably be with held nor will the Employer delay the issuance thereof, on account of minor omissions or defects which do not affect the commercial operation and/or cause any serious risk to the equipment. Such certificate shall not relieve the Contractor of any of his obligations which otherwise survive, by the terms and conditions of the Contract after issuance of such certificate.

13.00.00 **TRAINING OF EMPLOYER'S PERSONNEL**

13.01.00 The scope of service under training of Employer's engineers shall include a training module in the areas of Operation & Maintenance.

Such training should cover the following areas as a minimum in order to enable these personnel to individually take the responsibility of operating and maintaining the power station in a manner acceptable to the Employer:

(a.) Training for TG and related equipments.

(b.) TG related C&I system like turbine supervisory system (TSS) etc.

(c.) DDCMIS as detailed in Part-B

(d.) Training for Electric Power Supply systems

(e.) Training for power cycle piping / critical piping

13.02.00 The scope of services under training shall also necessarily include training of Employer's Engineering personnel covering entire scope for the package This shall

cover all disciplines viz, Mechanical, Electrical, C&I, & QA etcand shall include all the related areas like Design familiarization, training on product design features and product design softwares of major equipment and systems, engineering, manufacturing, erection, commissioning, training on operating features of equipment, quality assurance and testing, plant visits and visits to manufacturer's works, exposure to various kinds of problems which may be encountered in fabrication, manufacturing, erection, welding etc.

13.03.00 Contractor shall also arrange for training of Employer's personnel in respect of fire detection and protection systems and other Balance of Plant equipments.

13.04.00 Exact details, extent of training and the training schedule shall be finalised based on the Bidder's proposal within two (2) months from placement of award.

13.05.00 In all the above cases, the lodging and boarding of the Employer's personnel shall be at the cost of Bidder. The Bidder shall make all necessary arrangements towards the same.

13.06.00 Take off prices (product wise) should be indicated by the Bidder in the Bid Proposal Sheets. Employer reserves the right to include or exclude these item(s) during placement of Award.

Note:

1. For training purposes, one (1) man month implies 30 working days (excluding all intervening holidays) per person.
2. The total man months in each area shall be divided into suitable number of modules which shall be discussed and finalized during post award stage.
3. Duration of each module shall not be less than 10 (ten) working days out of which 20 % shall be for plant/manufacturers' works visits and 80% shall be class room training.
4. A) Location of class room training for engineering shall be at Design/Engineering office.

   B) Class room training for erection/O&M shall be at location of Manufacturers' works.

TRAINING REQUIRED IN MAN MONTH

Area	Engineering (Man months)	Erection (Man months)	O&M (Man months)

Steam Turbine Generator and its Auxiliaries including electricals	6.5	9.0	23
Station C&I (Control and Instrumentation)	3.5	5.5	10
Total			

Area	Topics	MANDAYS
Condensate Polishing Plant (CPU)	**System/Product Design** - Basic design features including Pre-filters - Theory & principle of operation - Latest technological trends in CPU & Pre-filters and design aspects & Selection criteria. **Plant Visit** - Operational feedback - O&M history / problems related to CPU plant **Visit to Manufacturer's Work** -Manufacturing process of pre-filters and major equipment -Testing facilities **Operation & Maintenance of Plant** -Trouble shooting and fault analysis -Familiarization of special maintenance techniques -Special tool and tackles familiarization	**3**

14.00.00 **SAFETY ASPECTS DURING CONSTRUCTION AND ERECTION**

In addition to the requirements given in Erection Conditions of Contract (ECC) the following shall also cover:

(a.) Working platforms should be fenced and shall have means of access.

(b.) Ladders in accordance with Employer's safety rules for construction and erection shall be used. Rungs shall not be welded on columns. All the stairs shall be provided with handrails immediately after its erection.

15.00.00 **NOISE LEVEL**

The equivalent 'A' weighted sound pressure level measured at a height of 1.5 m above floor level in elevation and at a distance of one (1) metre horizontally from the nearest surface of any equipment / machine, furnished and installed under these specifications, expressed in decibels to a reference of 0.0002 microbar, shall not exceed 85 dBA except for

(a.) Safety valves and associated vent pipes for which it shall not exceed 105 dBA-115 dBA.

(b.) Regulating drain valves in which case it shall be limited to 90 dBA-115dBA.

(c.) TG unit in which case it shall not exceed 90 dBA.

(d.) For HP-LP bypass valves and other intermittantly operating control valves, the noise level shall be within the limit of 90 dBA.

(e) For BFP motor, the noise level shall be within the limit of 90 dBA

16.00.00 **PACKAGING AND TRANSPORTATION**

All the equipments shall be suitably protected, coated, covered or boxed and crated to prevent damage or deterioration during transit, handling and storage at Site till the time of erection. While packing all the materials, the limitation from the point of view of the sizes of railway wagons available in India should be taken account of. The Contractor shall be responsible for any loss or damage during transportation, handling and storage due to improper packing. The Contractor shall ascertain the availability of Railway wagon sizes from the Indian Railways or any other agency concerned in India well before effecting despatch of equipment. Before despatch it shall be ensured that complete processing and manufacturing of the components is carried out at shop, only restricted by transport limitation, in order to ensure that site works like grinding, welding, cutting & preassembly to bare minimum. The Employer's Inspector shall have right to insist for completion of works in shops before despatch of materials for transportation.

17.00.00 **ELECTRICAL ENCLOSURE**

All electrical equipments and devices, including insulation, heating and ventilation devices shall be designed for ambient temperature and a maximum relative humidity as specified elsewhere in the specification,

18.00.00 **INSTRUMENTATION AND CONTROL**

All instrumentation and control systems/ equipment/ devices/ components, furnished under this contract shall be in accordance with the requirements stated herein, unless otherwise specified in the detailed specifications.

18.01.00 All instrument scales and charts shall be calibrated and printed in metric units and shall have linear graduation. The ranges shall be selected to have the normal reading at 75% of full scale.

All scales and charts shall be calibrated and printed in Metric Units as follows:

a) Temperature - Degree centigrade (deg C)

b) Pressure - Kilograms per square centimetre (Kg/cm2). Pressure instrument shall have the unit suffixed with 'a' to indicate absolute pressure. If nothing is there, that will mean that the indicated pressure is gauge pressure.

c) Draught - Millimetres of water column (mm wc).

d) Vacuum - Millimeters of mercury column (mm Hg) or water column (mm Wcl).

e) Flow (Gas) - Tonnes/ hour

f) Flow (Steam) - Tonnes/ hour

g) Flow (Liquid) - Tonnes / hour

h) Flow base - 760 mm Hg. 15 deg.C

i) Density - Grams per cubic centimetre.

18.02.00 All instruments and control devices provided on panels shall be of miniaturized design, suitable for modular flush mounting on panels with front draw out facility and flexible plug-in connection at rear.

18.03.00 **NOT USED**.

19.00.00 **ELECTRICAL NOISE CONTROL**

The equipment furnished by the Contractor shall incorporate necessary techniques to eliminate measurement and control problems caused by electrical noise. Areas in Contractor's equipment which are vulnerable to electrical noise shall be hardened to eliminate possible problems. Any additional equipment, services required for effectively eliminating the noise problems shall be included in the proposal.

20.00.00 **INSTRUMENT AIR SYSTEM**

The instrument air supply system as supplied by the Contractor for various pneumatic control & instrumentation devices like pneumatic actuators, power cylinders, E/P converters, piping / tubing etc. shall be as per the details furnished elsewhere.

Each pneumatic instrument shall have an individual air shut - off valve. The pressure regulating valve shall be equipped with an internal filter, a 50 mm pressure gauge and a built-in filter housing blow down valve.

21.00.00 **TAPPING POINTS FOR MEASUREMENTS**

Tapping points shall include probes, wherever applicable, for analytical measurements and sampling.

For direct temperature measurement of all working media, one stub with internal threading of approved pattern shall be provided along with suitable plug and washer. The Contractor will be intimated about thread standard to be adopted.

The following shall be provided on equipment by the Contractor. The standard which is to be adopted, will be intimated to the Contractor.

(a.) Temperature test pockets with stub and thermowell

(b.) Pressure test pockets

22.00.00 **SYSTEM DOCUMENTATION**

The Bidder shall provide drawings, system overview & description, hardware/ software details, technical literature, functional & hardware schemes, bill of material, parts list, interconnection diagrams, data sheets, erection/ installation/

commissioning procedures, instruction/ operating manuals, etc. for each of the C& I system / sub-systems/ equipment supplied under this package. The documentation shall include complete details of the C&I systems/ sub-systems/ equipment to enable review by Employer during detailed engineering stage and to provide information to plant personnel for operation & Maintenance (including quick diagnostics & trouble shooting) of these C&I systems/ sub-systems/ equipment at site. The minimum documentation requirements for C&I systems shall be as stipulated under C&I "Techncial Data Sheets" Part of specifications. In addition to this, system documentation for DDCMIS shall include as a minimum to that specified elsewhere in the Technical Specification.

The exact format, submission schedule and contents of various documents shall be as finalised during detailed engineering stage.

22.01.00 Bill of material (instrument list) for all C&I equipment/ devices shall be furnished by the bidder in standard formats as approved by the Employer.

23.00.00 **MAINTENANCE MANUALS OF ELECTRONIC MODULES**

The Contractor shall have to furnish two (2) sets of all maintenance manual of each and every electronic card/module as employed on the various systems and equipment including peripherals etc., offered by him. The Contractor will also have to furnish the data regarding the expected failure rate of various modules and other system components. Further, the contractor shall furnish a set of operating manuals which should include block diagrams, make, model/type, details wiring and external connection drawings etc as required to do the testing and maintenance of the electronic modules.

ANNEXURE-I

S.NO.	DESCRIPTION OF DOCUMENTS	NO OF PRINTS	NO. OF CD-ROMs
1.	PLANT DEFINITION MANUAL-	2 sets	4 CD-ROMs
2.	Drawings "FOR APPROVAL"		
	i) Layout drawings / P&IDs	6	2 CD - ROMs
	ii) Other drawings	2	2 CD - ROMs
3.	Drawings "FOR INFORMATION"	2	2 CD - ROMs
4.	Drawings "FINAL DRAWING"	15	4 CD-ROMs
5.	Drawings "AS BUILT "	15	4 CD-ROMs
6	DATASHEETS, DESIGN CALCULATIONS, PURCHASE SPECIFICATIONS, etc. and Other type of documents		
	i) For Approval	2	2 CD - ROMs
	ii) FINAL	15	4 CD-ROMs -
	iii) Analysis reports of equip-ments/ piping/ structures components/ systems employing software packages as detailed in the specifications	2	2 CD - ROMs
7.	Erection manual "1st Submission"	4 Sets	2 CD - ROMs
8	Erection manual "FINAL"	4 Sets	4 CD ROMs
9	Operation & Maintenance manual "1st submission"	4	2 CD - ROMs

S.NO.	DESCRIPTION OF DOCUMENTS	NO OF PRINTS	NO. OF CD-ROMs
10	Operation & Maintenance manual "FINAL"	4 Sets	4 CD-ROMs
11	Plant Hand Book "1st Submission"	4 Sets	2 CD ROMs
12	Plant Hand Book "FINAL"	4 Sets	4 CD ROMs
13	Commissioning and Performance Procedure manual "1st Submission"	4 Sets	2 CD-ROMs
14	Commissioning and Performance Procedure manual "FINAL"	4 Sets	4 CD ROMs
15	Performance and Functional GURANTEES TEST REPORT	4 Sets	4 CD ROMs
16	Project completion report	15	4 CD ROMs
17	QA programme including Organi-sation for implement-ation and QA systemmanual (with revision-servicing)	1	1 CD ROM
18	Vendor details in respect of pro-posed vendors including contractor's evaluation report.	1	1 CD ROM
19	Manufacturing QPs, Field QPs, Field welding schedules and their reference documents like test procedures, WPS, PQR etc.		
	(i) For review/comment	2	2 CD-ROMs
	(ii) For final approval	2	2 CD ROMs

S.NO.	DESCRIPTION OF DOCUMENTS	NO OF PRINTS	NO. OF CD-ROMs
20	Welding Manual, HeatTreatment Manuals, Storage & preservation manuals		
	1st Submission	4 Sets	2 CD ROMs sets
	Final	4 sets	4 CD ROMs
21	QA Documentation Packagefor items / equipmentmanufactured and and despatched to site	2 sets	4 CD ROMs
22	QA Documentation Package for field activities on equipment / systems at site	2 sets	4 CD ROMS

CLAUSE NO.	GENERAL TECHNICAL REQUIREMENTS

ANNEXURE-II

LIST OF CODES AND STANDARDS

Indian Standards	Title	International and Internationally recognised standards
IS:277	Galvanised steel sheets (plain or corrugated)	
IS:655	Specification for metal air duct	
IS:800	Code of practice for use of structural steel in general building construction	BS 449:1969 BS 5950 ASA A57, 1-1952
IS:807	Code of practice for design, manufacture, erection and testing (Structural portion) of cranes and hoists 6588 (Issued by Standards Associa-tion of Australia). DIN 120:1936 (Sheet 1) DIN 120:1936 (Sheet 2) 327 part-I, 1951 BS 466 part-II, 1960 BS 644:1960 BS 1757:1951 BS 2573:part-I:1960	Draft Revision of A.S. NO. CS.2 SAA Crane and Hoist code Doc:No. BU/4 Rev
IS:875	Code of practice for design loads (other than earthquake) for buildings and structures Leading standards (issued by Canadian Standard) DIN-1055-1955 (Issued by ASA)	National Building code of Canada (1953)-Part-IV Design section 4.1

IS:1239 Part-I	Mild steel tubes	(ISO/R 65-1957) (ISO/R-64-1958) (ISO/R-65-1958) (BS 1387 : 1957)
IS:1239 Part-II	Mild steel tubulars and other wrought steel pipe fittings	BS 1387 : 1967 BS 1387 :1967 BS 1740 :1965
IS:2825	Code for unfired vessels	
IS:1520	Horizontal centrifugal pumps for clear cold and fresh water	
IS:1600	Code for practice for performance of constant speed IC Engines for general purpose	
IS:1601	Specification for perform-ance of constant speed IC Engines for general Purpose	
IS:1893	Criteria for earthquake resistant design of structures	
IS1978-1971	Line Pipe April 1969.	API Standards 5L
IS:2254-1970	Dimensions of vertical shaft motor for pumps	IEC Pub 72-1 part I NEMA Pub MG 1 1954
IS:2266	Steel wire ropes for general engineering purposes	BS :302 : 1968
IS:2312	Propellant type Ventilation fans	

IS:2365	Steel wire suspension ropes for lifts and hoists	BS : 1957
IS:3346	Method for the determination of thermal conductivity of thermal insulation materials (two slab guarded hot plate method)	DIN 52612 (Deutscher Normenausschuss) ASTM C 163-1964 (American Society of Testing and materials) ASTM C 167-1974 ASTM C 177-1963
IS:3354	Outline dimensions for electric lifts.	
IS:3401	Silica gel	
IS:3588	Specification for electrical axial flow fans	
IS:3589	Electrically welded steel pipes for water, gas and sewage (200mm to 2000 mm Nominal Diametre)	
IS:3677	Unbonded rock and slag wool for thermal insulation	
IS:3815	Point hook with shank for general engineering purposes	BS 482 - 1968 Doc.:67/3 1284 (Revision of BS 2903) (Issued BS)
IS:3895	Specification for monocrystallines semiconductor rectifier cells and stacks	
IS:3963	Roof extractor unit	
IS:3975	Mild steel wires, strips and tapes for armouring cables	

IS:4503	Shell and tube type heat Exchanger	
IS:4540	Specification for monory-stallines rectifire assembly equipment	
IS:4671	Expanded polystyrene for thermal insulation purpose	
IS:4736	Hot dip zinc coating on steel tubes	
IS:4894	Centrifugal fans	
IS:5456	Code of practice for testing of positive displacement type air compressors and exhauster (For Test Tolerance Only)	
IS:5749	Forged ramshorn hooks	Entwurf DIN 15402 Blett 1 Entwurf DIN 15402 BS 3017-1958
IS:6392	Steel pipe flanges	BS 4504 : 1969
IS:6524 Part-I	Code of practice for design of tower cranes Static and rail mounted	BS 2799 : 1956
IS:7098	Cross linked Polyethylene insulated PVC sheathed cables	Standard No. 1 to IPCEA (USA) Pub. No. 5-66-524
IS:7373	Specification for wrought aluminium and aluminium sheet and strips	
IS:7938	Air receivers for compressed air installation	

CLAUSE NO.	GENERAL TECHNICAL REQUIREMENTS	
	ISO:1217	Displacement compressor-Acceplance test
	ASHRAE-33	Methods of testing for rating of forced circulation air cooling and air heating coils.
	ASHRAE-52-76	Air cleaning device used in general ventilation for removing particle matter.
	ASHRAE-22-72	Method of testing for rating of water cooled refrigerant condensers.
	ASHRAE 23-67	Methods of testing for rating of positive displacement refrigerant compressors.
	ARI-450-6	Standard for water cooled refrigerant condensers.
	ARI-550	Standard for centrifugal water chilling packages.
	ARI-410	Standard for forced circulation air cooling and air heating coils
	ARI-430/435 BS:848 (Part-1,2)	Central station AHU/Application of Central Station AHU Fans
	BS:400	Low carbon steel cylinders for the storage & transport of permanent gases.
	BS:401	Low carbon steel cylinders for the storage & transport of liquified gases.
	CTI Code ACT-105	Acceptance test code for Water Cooling Tower.
	ANSI-31.5	Refrigerant piping
	ASME-PTC- 23-1958	Atmospheric Water Cooling Equipment
	AMCA A-21C	Test Code for air moving devices
	API:618	Reciprocating Compressor for general refinary services.
	HYDRAULIC INSTITUTE STANDARDS.	

HYDRANT SYSTEM MANUALS OF TAC.

TAC MANUALS OF SPRAY SYSTEM

NFPA USA/ NSC UK/ UL USA/ FM USA STANDARDS.

INDIAN EXPLOSIVES ACT.

INDIAN FACTORIES ACT.

STANDARD OF TUBULAR EXCHANGER MANUFACTURER'S ASSOCIATION.

CODE AND STANDARD FOR CIVIL WORKS

Some of the applicable Standards, Codes and references are as follows:

Excavation & Filling

IS: 2720 (Part-II, IV TO VIII, XIV, XXI, XXIII, XXIV, XXVII TO XXIX, XL) Methods of test for soils-determination for water content etc.

IS: 4701 Code of practice for earth work on canals.

IS: 9758 Guide lines for Dewatering during construction.

IS: 10379 Code of practice for field control of moisture and compaction of soils for embankment and sub-grade.

Properties, Storage and Handling of Common Building Materials

IS: 269 Specification for ordinary Portland cement, 33 grade.

IS: 383 Specification for coarse and fine aggregates from natural sources for concrete.

IS: 432 Specification for mild steel and (Parts 1&2) medium tensile steel bars and hard-drawn steel wires for concrete reinforcement.

IS: 455 Specification for Portland slag cement.

IS: 702 Specification for Industrial bitumen.

IS: 712 Specification for building limes.

IS: 808	Rolled steel Beam channel and angle sections.
IS: 1077	Specification for common burnt clay building bricks.
IS: 1161	Specification of steel tubes for structural purposes.
IS: 1363	Hexagon head Bolts, Screws and nuts of production grade C.
IS: 1364	Hexagon head Bolts, Screws and Nuts of Production grade A & B.
IS: 1367	Technical supply conditions for Threaded fasteners.
IS: 1489	Specification for Portland-pozzolana cement:
(Part-I)	Fly ash based.
(Part-II)	Calcined clay based.
IS: 1542	Specification for sand for plaster.
IS: 1566	Specification for hard-drawn steel wire fabric for concrete reinforcement.
IS: 1786	Specification for high strength deformed bars for concrete reinforcement.
IS: 2062	Specification for steel for general structural purposes.
IS: 2116	Specification for sand for masonry mortars.
IS: 2386 (Parts-I to VIII)	Testing of aggregates for concrete.
IS: 3150	Hexagonal wire netting for general purpose.
IS: 3495 (Parts-I to IV)	Methods of tests of burnt clay building bricks.
IS: 3812	Specification for fly ash, for use as pozzolana and admixture.
IS: 4031	Methods of physical tests for hydraulic cement.
IS: 4032	Methods of chemical analysis of hydraulic cement.

IS: 4082	Recommendations on stacking and storage of construction materials at site.
IS: 8112	Specification for 43 grade ordinary portland cement.
IS: 8500	Medium and high strength structural steel.
IS: 12269	53 grade ordinary portland cement.
IS: 12894	Specification for Fly ash lime bricks.

Cast-In-Situ Concrete and Allied Works

IS: 280	Specification for mild steel wire for general engineering purposes.
IS: 456	Code of practice for plain and reinforced concrete.
IS: 457	Code of practice for general construction of plain & reinforced concrete for dams & other massive structures.
IS: 516	Method of test for strength of concrete.
IS: 650	Specification for standard sand for testing of cement.
IS: 1199	Methods of sampling and analysis of concrete.
IS: 1791	General requirements for batch type concrete mixers.
IS: 1838 (Part-I)	Specification for preformed fillers for expansion joints in concrete pavements and structures (non-extruding and resilient type).
IS: 2204	Code of practice for construction of reinforced concrete shell roof.
IS: 2210	Criteria for the design of reinforced concrete shell structures and folded plates.
IS: 2438	Specification for roller pan mixer.
IS: 2502	Code of practice for bending and fixing of bars for concrete reinforcement.
IS: 2505	General requirements for concrete vibrators, immersion type.

IS: 2506	General requirements for concrete vibrators, screed board type.
IS: 2514	Specification for concrete vibrating tables.
IS: 2645	Specification for Integral cement water proofing compounds.
IS: 2722	Specification for portable swing weigh batches for concrete. (single and double bucket type)
IS: 2750	Specification for Steel scaffolding.
IS: 2751	Code of practice for welding of mild steel plain and deformed bars for reinforced concrete construction.
IS: 3025	Methods of sampling and test waste water.
IS: 3366	Specification for Pan vibrators.
IS: 3370 (Part I to IV)	Code of practice for concrete structures for the storage of liquids.
IS: 3414	Code of practice for design and installation of joints in buildings.
IS: 3550	Methods of test for routine control for water used in industry.
IS: 3558 concrete.	Code of practice for use of immersion vibrators for consolidating
IS: 4014 (Parts I & II)	Code of practice for steel tubular scaffolding.
IS: 4326 of buildings.	Code of practice for earthquake resistant design and construction
IS: 4461	Code of practice for joints in surface hydro-electric power stations.
IS: 4656	Specification for form vibrators for concrete.
IS: 4925	Specification for batching and mixing plant.
IS: 4990	Specification for plywood for concrete shuttering work.

IS: 4995 (Parts I & II)	Criteria for design of reinforced concrete bins for the storage of granular and powdery materials.
IS: 5256	Code or practice for sealing joints in concrete lining on canals.
IS: 5525	Recommendations for detailing of reinforcement in reinforced concrete work.
IS: 5624	Specification for foundation bolts.
IS: 6461	Glossary of terms relating to cement concrete.
IS: 6494	Code of practice for water proofing of underground water reservoirs and swimming pools.
IS: 6509	Code of practice for installation of joints in concrete pavements.
IS: 7861	Code of practice for extreme weather concreting. (Parts I & II)
IS: 9012	Recommended practice for shot concreting.
IS: 9103	Specification for admixtures for concrete.
IS: 9417	Recommendations for welding cold worked steel bars for reinforced concrete construction.
IS: 10262	Recommended guidelines for concrete mix design.
IS: 11384	Code of practice for composite construction in structural steel and concrete.
IS: 11504	Criteria for structural design of reinforced concrete natural draught cooling towers.
IS: 12118	Specification for two-parts poly sulphide.
IS: 12200	Code of practice for provision of water stops at transverse contraction joints in masonry and concrete dams.
IS: 13311	Method of non-destructive testing of concrete.
Part-1	Ultrasonic pulse velocity.

Part-2	Rebound hammer.
SP:23	Handbook of concrete mixes
SP: 24	Explanatory Handbook on IS: 456-1978
SP: 34	Handbook on concrete reinforcement and detailing.

Precast Concrete Works

SP: 7(PartVI/	National Building Code- Structural design of prefabrication and Sec.7) systems building.
IS: 10297	Code of practice for design and construction of floors and roofs using precast reinforced/prestressed concrete ribbed or cored slab units.
IS: 10505	Code of practice for construction of floors and roofs using pre-cast reinforced concrete units.

Masonary and Allied Works

IS: 1905	Code of Practice for Structural Safety of Buildings-Masonry walls.
IS: 2212	Code of Practice for Brickwork.
IS: 2250	Code of Practice for Preparation and use of Masonry Mortar.
SP: 20	Explanatory hand book on masonry code.

Sheeting Works

IS:277	Galvanised steel sheets (plain or corrugated).
IS: 459	Unreinforced corrugated and semi-corrugated asbestos cement sheets.
IS: 513	Cold-rolled carbon steel sheets.
IS: 730	Specification for fixing accessories for corrugated sheet roofing.

IS: 1626	Specification for Asbestos cement building pipes and pipe fittings, gutters and gutter fittings and roofing fittings.
IS: 2527	Code of practice for fixing rain water gutters and down pipe for roof drainage.
IS: 3007	Code of practice for laying of asbestos cement sheets.
IS: 5913	Methods of test for asbestos cement products.
IS: 7178	Technical supply conditions for tapping screw.
IS: 8183	Bonded mineral wool.
IS: 8869	Washers for corrugated sheet roofing.
IS: 12093	Code of practice for laying and fixing of sloped roof covering using plain and corrugated galvanised steel sheets.
IS: 12866	Plastic translucent sheets made from thermosetting polyster resin (glass fibre reinforced).
IS: 14246	Specification for continuously pre-painted galvanised steel sheets and coils.

Fabrication and Erection of Structural Steel Work

IS: 2016	Specification for plain washers.
IS: 814	Specification for covered Electrodes for Metal Arc Welding for weld steel.
IS: 1852	Specification for Rolling and Cutting Tolerances for Hot rolled steel products.
IS: 3502	Specifications for chequered plate.
IS: 6911	Specification for stainless steel plate, sheet and strip.
IS: 3757	Specification for high strength structural bolts
IS: 6623	Specification for high strength structural nuts.

IS: 6649	High Tensile friction grip washers.
IS: 800	Code of practice for use of structural steel in general building construction.
IS: 816	Code of practice for use of Metal Arc Welding for General Construction.
IS: 4000	Code of practice for assembly of structural joints using high tensile friction grip fasteners.
IS: 9595	Code of procedure of Manual Metal Arc Welding of Mild Steel.
IS: 817	Code of practice for Training and Testing of Metal Arc Welders.
IS: 1811	Qualifying tests for Metal Arc Welders (engaged in welding structures other than pipes).
IS: 9178	Criteria for Design of steel bins for storage of Bulk Materials.
IS: 9006	Recommended Practice for Welding of Clad Steel.
IS: 7215	Tolerances for fabrication steel structures.
IS: 12843	Tolerance for erection of structural steel.
IS: 4353	Recommendations for submerged arc welding of mild steel and low alloy steels.
SP: 6 (Part 1 to 7)	ISI Hand book for structural Engineers.
IS: 1608	Method of Tensile Testing of Steel products other than sheets, strip, wire and tube.
IS: 1599	Method of Bend Tests for Steel products other than sheet, strip, wire and tube
IS : 228	Methods of chemical Analysis of pig iron, cast iron and plain carbon and low alloy steel.
IS : 2595	Code of Practice for Radio graphic testing.

IS : 1182	Recommended practice for Radiographic Examination of fusion welded butt joints in steel plates.
IS : 3664	Code of practice for Ultra sonic Testing by pulse echo method.
IS : 3613	Acceptance tests for wire flux combination for submerged Arc Welding.
IS : 3658	Code of practice for Liquid penetrant Flaw Detection.
IS : 5334	Code of practice for Magnetic Particle Flaw Detection of Welds.

Plastering and Allied Works

IS : 1635	Code of practice for field slaking of Building lime and preparation of putty.
IS : 1661	Application of cement and cement lime plaster finishes.
IS : 2333	Plaster-of-paris.
IS : 2402	Code of practice for external rendered finishes.
IS : 2547	Gypsum building plaster.
IS : 3150	Hexagonal wire netting for general purpose.

Acid and Alkali Resistant Lining

IS : 158	Ready mixed paint, brushing, bituminous, black, lead free, acid, alkali & heat resisting.
IS : 412	Specification for expanded metal steel sheets for general purpose.
IS : 4441	Code of practice for use of silicate type chemical resistant mortars.
IS : 4443	Code of practice for use of resin type chemical resistant mortars.
IS : 4456	Method of test for chemical resistant tiles. (Part I & II)

IS : 4457	Specification for ceramic unglazed vitreous acid resistant tiles.
IS : 4832	Specification for chemical resistant mortars.
	Part I Silicate type
	Part II Resin type
	Part III Sulphur type
IS : 4860	Specification for acid resistant bricks.
IS : 9510	Specification for bitumasitc, Acid resisting grade.

Water Supply, Drainage and Sanitation

IS : 458	Specification for concrete pipes.
IS : 554	Dimensions for pipe threads, where pressure tight joints are made on thread.
IS : 651	Specification for salt glazed stoneware pipes.
IS : 774	Flushing cisterns for water closets and urinals.
IS : 775	Cast iron brackets and supports for wash basins and sinks.
IS : 778	Copper alloy gate, globe and check valves for water works purposes.
IS : 781	Cast copper alloy screw down bib taps and stop valves for water services.
IS : 782	Caulking lead.
IS : 783	Code of practice for laying of concrete pipes.
IS : 1172	Basic requirements for water supply, drainage and sanitation.
IS : 1230	Cast iron rain water pipes and fittings.
IS : 1239	Mild steel tubes, tubulars and other wrought steel fittings.

IS : 1536	Centrifugally cast (Spun) iron pressure pipes for water, gas and sewage.
IS : 1537	Vertically cast iron pressure pipes for water, gas and sewage.
IS : 1538	Cast iron fittings for pressure pipe for water, gas and sewage.
IS : 1703	Ball valves (horizontal plunger type) including float for water supply purposes.
IS : 1726	Cast iron manhole covers and frames.
IS : 1729	Sand cast iron spigot and socket, soil, water and ventilating pipes, fittings and accessories.
IS : 1742	Code of practice for building drainage.
IS : 1795	Pillar taps for water supply purposes.
IS : 1879	Malleable cast iron pipe fittings.
IS : 2064	Code of practice for selection, installation and maintenance of sanitary appliances.
IS : 2065	Code of practice for water supply in building.
IS : 2326	Automatic flushing cisterns for urinals.
IS : 2470 (Part-I & II)	Code of practice for installation of septic tanks.
IS : 2501	Copper tubes for general engineering purposes.
IS : 2548	Plastic seat and cover for water-closets.
IS : 2556 (Part 1 to 15)	Vitreous sanitary appliances (vitreous china).
IS : 2963	Non-ferrous waste fittings for wash basins and sinks.
IS : 3114	Code of practice for laying of cast iron pipes.

CLAUSE NO.	GENERAL TECHNICAL REQUIREMENTS	
	IS : 3311	Waste plug and its accessories for sinks and wash basins.
	IS : 3438	Silvered glass mirrors for general purposes.
	IS : 3486	Cast iron spigot and socket drain pipes.
	IS : 3589	Electrically welded steel pipes for water, gas and sewage (200mm to 2000mm nominal diameter).
	IS : 3989	Centrifugally cast (Spun) iron spigot and socket soil, waste and ventilating pipes, fittings and accessories.
	IS : 4111 (Part I to IV)	Code of practice for ancillary structure in sewerage system.
	IS : 4127	Code of practice for laying of glazed stone-ware pipes.
	IS : 4764	Tolerance limits for sewage effluents discharged into inland-surface waters.
	IS : 4827	Electro plated coating of nickel and chromium on copper and copper alloys.
	IS : 5329	Code of practice for sanitary pipe work above ground for buildings.
	IS : 5382	Rubber sealing rings for gas mains, water mains and sewers.
	IS : 5822	Code of practice for laying of welded steel pipes for water supply.
	IS : 5961	Cast iron grating for drainage purpose.
	IS : 7740	Code of practice for road gullies.
	IS : 8931	Cast copper alloy fancy bib taps and stop valves for water services.
	IS : 8934	Cast copper alloy fancy pillar taps for water services.
	IS : 9762	Polyethylene floats for ball valves.

IS : 10446	Glossary of terms for water supply and sanitation.
IS : 10592	Industrial emergency showers, eye and face fountains and combination units.
IS : 12592	Specification for precast concrete manhole covers and frames.
IS : 12701	Rotational moulded polyethylene water storage tanks.
SP: 35	Hand book on water supply and drainage.
-	Manual on Sewerage and sewage treatment (Published by CPH & EEO) As updated.

Doors, Windows and Allied Works

IS : 204	Tower Bolts
Part-I	Ferrous metals.
Part-II	Nonferrous metals.
IS : 208	Door Handles.
IS : 281	Mild steel sliding door bolts for use with padlocks.
IS : 362	Parliament Hinges.
IS : 420	Specification for putty, for use on metal frames.
IS : 1003 Part-I door	Specification for timber panelled and glazed shutters- (Part-I) shutters.
IS : 1038	Steel doors, windows and ventilators.
IS : 1081	Code of practice for fixing and glazing of metal (steel and aluminium) doors, windows and ventilators.
IS : 1341	Steel butt hinges.
IS : 1361	Steel windows for industrial buildings.
IS : 1823	Floor door stoppers.

IS : 1868	Anodic coatings on Aluminium and its alloys.
IS : 2202 (Part-II)	Specification for wooden flush door shutters (solid core type); particle board face panels and hard board face panels
IS:2209	Mortice locks (vertical type).
IS:2553	Safety glass
IS:2835	Flat transparent sheet glass.
IS:3548	Code of practice for glazing in buildings.
IS:3564	Door closers (Hydraulically regulated).
IS : 3614	Fire check doors; plate, metal covered and rolling type.
IS:4351	Steel door frames.
IS:5187	Flush bolts.
IS:5437	Wired and figured glass
IS:6248	Metal rolling shutters and rolling grills.
IS:6315	Floor springs (hydraulically regulated) for heavy doors.
IS:7196	Hold fasts.
IS:7452	Hot rolled steel sections for doors, windows and ventilators.
IS:10019	Mild steel stays and fasteners.
IS:10451	Steel sliding shutters (top hung type).
IS:10521	Collapsible gates.

Roof Water Proofing and AlliedWorks

IS:1203	Methods of testing tar and bitumen.

IS:1322	Specification for bitumen felts for water proofing and damp proofing.
IS:1346	Code of practice for water proofing of roofs with bitumen felts.
IS:1580	Specification for bituminous compound for water proofing and caulking purposes.
IS:3067	Code of practice for general design details and preparatory work for damp proofing and water proofing of buildings.
IS:3384	Specification for bitumen primer for use in water proofing and damp proofing.

Floor Finishes and Allied Works

IS:1237	Specification for cement concrete flooring tiles.
IS:1443	Code of practice for laying and finishing of cement concrete flooring tiles.
IS:2114	Code of practice for laying in-situ terrazzo floor finish.
IS:2571	Code of practice for laying in-situ cement concrete flooring.
IS:3462	Specification for unbacked flexible PVC flooring.
IS:4971	Recommendations for selection of industrial floor finishes.
IS:5318	Code of practice for laying of flexible PVC sheet and tile flooring.
IS:8042	Specification for white portland cement.
IS:13801	Specification for chequered cement concrete flooring tiles.

Painting and Allied Works

IS:162	Specification for fire resisting silicate type, brushing, for use on wood, colour as required.
IS:1477	Code of practice for painting of ferrous metals in buildings.
Part-I	Pretreatment.

Part-II	Painting.
IS:1650	Specification for colours for building and decorative finishes.
IS:2074	Specification for red oxide-zinc chrome, priming, ready mixed paint air drying.
IS:2338	Code of practice for finishing of wood and wood based materials.
Part-I	Operations and workmanship
Part-II	Schedules
IS:2395	Code of practice for painting concrete, masonry and plaster surfaces.
Part-I	Operations and workmanship.
Part-II	Schedule.
IS:2524	Code of practice for painting of nonferrous metals in buildings.
Part-I	Pretreatment.
Part-II	Painting.
IS:2932	Specification of synthetic enamel paint, exterior, under-coating and finishing.
IS:2933	Specification enamel paint, under coating and finishing.
IS:4759	Code of practice for hot dip zinc coating on structural steel and other allied products.
IS:5410	Specification for cement paint
IS:5411 (Part-I)	Specification for plastic emulsion paint-for exterior use
IS:6278	Code of practices for white washing and colour washing.
IS:10403	Glossary of terms relating to building finishes.
Piling and Foundation	
IS:1080	Code of practice for design and construction of simple spread foundations.

IS:1904	Code of practice for design and construction of foundations in Soils; General Requirements.
IS:2911	Code of practice for designs and construction of Pile foundations (Relevant Parts).
IS:2950	Code of practice for designs and construction of Raft (Part-I) foundation.
IS:2974	Code of practice for design and construction of machine
(Part-I TO V)	foundations.
IS:6403	Code of practice for determination of Allowable Bearing pressure on Shallow foundation.
IS:8009	Code of practice for calculation of settlement of foundation subjected to symmetrical vertical loads.
Part-I	Shallow foundations.
Part-II	Deep foundations.
IS:12070	Code of practice for design and construction of shallow foundations on rocks.
DIN:4024	Flexible supporting structures for machines with rotating machines.
VDI:2056	Criteria for assessing mechanical vibrations of machines.
VDI:2060	Criteria for assessing rotating imbalances in machines.

Stop Log and Trash Rack

IS:4622	Recommendations for fixed - wheel gates structural design.
IS:5620	Recommendations for structural design criteria for low head slide gates.
IS:11388	Recommendations for design of trash rack for intakes.
IS:11855	General requirements for rubber seals for hydraulic gates.

Roads

IRC:5	Standard specifications and Code of practice for road bridges, section-I general Features of Design.
IRC:14	Recommended practice of 2cm thick bitumen and tar carpets.
IRC:16	Specification for priming of base course with bituminous primers.

IRC:19	Standard specifications and code of practice for water bound macadam.
IRC:21	Standard specifications and Code of practice for road bridges, section-III - Cement concrete (plain and reinforced).
IRC:34	Recommendations for road construction in waterlogged areas.
IRC:36	Recommended practice for the construction of earth embankments for road works.
IRC:37	Guidelines for the Design of flexible pavements.
IRC:56	Recommended practice for treatment of embankment slopes for erosion control.
IRC:73	Geometric design standards for rural (non-urban) highways.
IRC:86	Geometric Design standards for urban roads in plains.
IRC:SP:13	Guidelines for the design of small bridges & culverts.
IRC - Public-	Ministry of Surface Transport (Roads Wing), Specifications
ation	for road and bridge works.
IS:73	Specification for paving bitumen
Loadings	
IS:875	Code of practice for design loads other than earthquake) for
(Pt. I to V)	buildings and structures.
IS:1893	Criteria for earthquake resistant design of structures.
IS:4091	Code of Practice for design and construction of foundation for transmission line towers & poles.
IRC:6	Standard specifications & code of practice for road bridges, Section-II Loads and stresses.
M.O.T.	Deptt. of railways Bridge Rules.
Safety	
IS:3696	Safety code for scaffolds and ladders.
(Part I & II)	
IS:3764	Safety code for excavation work.
IS:4081	Safety code for blasting and related drilling operations.
IS:4130	Safety code for demolition of buildings.

IS:5121	Safety code for piling and other deep foundations.
IS:5916	Safety code for construction involving use of hot bituminous materials.
IS:7205	Safety code for erection on structural steelwork.
IS:7293	Safety code for working with construction machinery.
IS:7969	Safety code for handling and storage of building materials
IS:11769	Guidelines for safe use of products containing asbestos.

- Indian Explosives Act. 1940 as updated.

Architectural design of buildings

SP:7	National Building Code of India
SP:41	Hand book on functional requirements of buildings (other than industrial buildings)

Miscellaneous

IS:802	Code of practice for use of structural steel in
(Relevant parts)	overhead transmission line towers.
IS:803	Code of practice for design, fabrication and erection of vertical mild steel cylindrically welded in storage tanks.
IS:10430	Creteria for design of lined canals and liner for selection of type of lining.
IS:11592	Code of practice for selection and design of belt conveyors.
IS:12867	PVC handrails covers.
CIRIA	Design and construction of buried thin-wall pipes.
Publication	

REFERENCE CODES AND STANDARDS FOR CONTROL AND INSTRUMENTATION

The design, manufacture, inspection, testing & installation of all equipment and system covered under this specification shall conform to the latest editions of codes and standards mentioned below and all other applicable VDE, IEEE, ANSI, ASME, NEC, NEMA, ISA AND Indian Standards and their equivalents.

Temperature Measurements

1. Instrument and apparatus for temperature measurement - ASME PTC 19.3 (1974).

2. Temperature measurement - Thermocouples ANSI MC 96.1 - 1982.

3. Temperature measuremnet by electrical Resistance thermometers - IS:2806.

4. Thermometer - element - Platinum resistance - IS:2848.

Pressure Measurements

1. a) Instruments and apparatus for pressure measurement - ASME PTC 19.2 (1964).

   b) Electonic transmitters BS:6447.

2. Bourdon tube pressure and vacuum gauges - IS:3624 - 1966.

3. Process operated switch devices (Pr. Switch) BS-6134.

Flow Measurements

Instruments and apparatus for flow measurements - ASME PTC 19.5 (1972) Interim supplement, Part-II.

Measurement of fluid flow in closed conduits - BS-1042.

Electronic Measuring Instrument & Control Hardware/ Software

1. Automatic null balancing electrical measuring instruments - ANSI C 39.4 (Rev. 1973): IS:9319.

2. Safety requirements for electrical and electronic measuring and controling instrument - ANSI C 39.5 - 1974.

3. Compatability of analog signals for electronic industrial process instruments - ISA - S 50.1 (1982) ANSI MC 12.1 - 1975.

4. Dynamic response testing of process control instrumentation ISA - S 26 (1968).

5. Surge Withstand Capability (SWC) tests - ANSI C 37.90 a/IEEE-472 or suitable class of IEC-255-4 equivalent to ANSI C37.90a/IEEE-472.

6. Printed circuit boards - IPC TM - 650, IEC 326 C.

7. General requirement and tests for printed wiring boards - IS 7405 (Part-I) 1973.

8. Edge socket connectors - IEC 130-11.

9. Requirements and methods of testing of wire wrap terminations DIN 41611 Part-2.

10. Dimensions of attachment plugs & receptacles - ANSI C 73 - 1973 (Supplement ANSI C 73 a - 1980).

11. Direct acting electrical indicating instrument - IS:1248 - 1968 (R).

12. Standard Digital Interface for Programmable Instrumentation - IEEE-488.2 - 1990.

13. Information Processing Systems - Local Area Networks - Part 2 : Logical Link Control - IEEE-802.2 - 1989.

14. Standard for Local Area Networks : Carrier Sense Multiple Access with Collision Detection - IEEE-802.3 - 1985.

15. Supplements A, B, C and E to Carrier Sense Multiple Access with Collision Detection - IEEE-802.3 - 1988.

16. Standard for Local Area Networks : Token - Passing Bus Access Method - IEEE-802.4 - 1985.

17. Standard for Local Area Networks : Token - Ring Access Method and Physical Layer Specification - IEEE-802.5 - 1985.

18. IEEE Guide to Software Requirements Specifications - IEEE-830 - 1984.

19. Hardware Testing of Digital Process Computers - ISA RP55.1 - 1983.

20. Electromagnetic Susceptibility of Process Control Instrumentation - SAMA PMC 33.1 - 1978.

21. Interface Between the Data Terminal Equipment and Data Circuit - Terminating Equipment Employing Serial Binary Data Interchange - EIA-232-D-1987.

22. Electromagnetic Compatibility for Industrial Process Measurement and Control Equipment, Part 3 : Radiated Electromagnetic Field Requirements - IEC 801-3-1984.

Instrument Switches and Contact

1. Contact rating - AC services NEMA ICS 2 - 1978 (with revision through May 1983), Part - 2-125, A6000.

2. Contact rating - DC services NEMA ICS 2-1978 Part-2 125, N600.

Enclosures

1. Type of Enclosures - NEMA ICS Part - 6 - 1978 (with Rev. 1 4/80) through 110.22 (Type 4 to 13).

2. Racks, panels and associated equipment - EIA : RS - 310 C- 1983 (ANSI C 83.9 - 1972).

3. Protection class for Enclosures, cabinets, control panels & desks - IS:2147 - 1962.

Apparatus, enclosures and installation practices in hazardous area

1. Classification of hazardous area - NFPA 70 - 1984, Article 500.

2. Electrical Instruments in hazardous dust location - ISA - 512.11, 1973.

3. Instrinsically safe apparatus - NFPA 493 1978.

4. Purged and pressurised enclosure for electrical equipment in hazardous location - NFPA 496-1982.

5. Enclosures for Industrial Controls and Systems - NEMA IS 1.1 - 1977.

Sampling System

1. Stainless steel material of tubing and valves for sampling system - ASTMA 296-82, Grade 7 P 316.

2. Submerged helical coil heat exchangers for sample coolers ASTM D11 92-1977.

3. Water and steam in power cycle - ASME PTC 19.11.

4. Standard methods of sampling system - ASTM D 1066-99.

Annunciators

1. Specifications and guides for the use of general purpose annunciators - ISA S 19.1, 1979.

2. Surge withstand capability tests - ANSI C 37.90a - 1989/IEEE-472 or suitable class of IEC 255-4 equivalent to ANSI C37.90a 1989/IEEE-472

3. Damp heat cycling test - IS:2106

4. Specification for Electromagnetic Susceptibility - SAMA DMC 33, 1/78

Protections

1. Relays and relay system associated with electric power apparatus. ANSI C 37.90, 1 - 1989.

2. General requirements & tests for switching devices for control and auxiliary circuits including contactor relays - IS:6875 (Part-I) - 1973.

3. Turbine water damage prevention - ASME TDP-1-1980.

4. Boiler safety interlocks - NFPA Section 85 B - 1984, 85 C - 1991.

UPS System

1. Practices and requirements for semi-conductor power rectifiers - ANSI C 34.2, 1973.

2. Relays and relays system associated with electrical power apparatus - ANSI C 3.90 - 1983.

3. Surge withstand capability test - ANSI C 37.90 1 -1989.

4. Performance testing of UPS - IEC 146.

5. Stationary cells & Batteries Lead Acid type (with tubular positive plates) specification IS-1651-1991.

6. Recommended practice for sizing large lead storage batteries for generating stations & sub-stations - IEEE-485-1985.

7. Printed Circuit Board - IPC TM 650, IEC 326C.

8. General Requirements & tests for printed wiring boards, IS:7405 (Part-I) 1973.

Control Valves

1. Control valve sizing - Compressible & Incompressible fluids - ISA S 75.01-1985.

2. Face to face dimensions of control valves - ANSI B 16.00 - 1973.

3. ISA Hand Book of Control Valves - (ISBN : B: 1047-087664-234-2).

4. Codes for pressure piping - ANSI B 31.1

5. Control Valve leak class - ISA RP 39.6

Process Connection & Piping

1. Codes for pressure piping "power piping" - ANSI B 31.1.

2. Seamless carbon steel pipe ASTM - A - 106.

3. Forged & Rolled Alloy steel pipe flanges, forged fittings and valves and parts - ASTM - A - 182.

4. Material for socket welded fittings - ASTM - A - 105.

5. Seamless ferritic alloy steep pipe - ASTM - A - 335.

6. Pipe fittings of wrought carbon steel and alloy steel - ASTM - A - 234.

7. Composition bronze of ounce metal castings - ASTM - B - 62.

8. Seamless Copper tube, bright annealed - ASTM - B - 168.

9. Seamless copper tube - ASTM - B - 75.

10. Dimension of fittings - ANSI - B - 16.11.

11. Valves flanged and butt welding ends - ANSI - B - 16.34.

Instrument Tubing

1. Seamless carbon steel pipe - ASTM - A 106.

2. Material of socketweld fittings - ASTM - A105.

3. Dimensions of fittings - ANSI - B - 16.11.

4. Code for pressure piping, welding, hydrostatic testing - ANSI B 31.1.

Cables

1. Thermocouples extension wires/cables - ANSI MC 96.1 - 1992.

2. Requirements for copper conductor-Wiring cables for telecommunications & information processing system - VDE:0815.

3. Colour coding of single or multi-pair cables - ICEA - S - 61-402 (third edition) NEMA WCS - 1979 with revisions thorugh 2/83.

4. Insulation & Sheathing compounds for cables : VDE 0207 (Part-4, 5 & 6).

5. Guide design and installation of cable systems in power generating stations (insulation, jacket materials) - IEEE Std. 422-1977.

6. Rules for Testing insulated cables and flexible cables : VVDE - 0472

7. Requirements of vertical flame propagation test - IEEE 383 - 1974 (R 1980)

8. Standard specification for tinned soft or annealed copper wire for electrical purpose - ASTM B-33-81.

9. Oxygen index and temperature index test - ASTM D - 2863.

10. Smoke density measurement test - ASTMD - 2843.

11. Acid gas generation test - IEC - 754 - 1.

12. Swedish Chimney test - SEN - 4241475 (F3).

13. Teflon (FEP) insulation & sheath test - ASTMD - 2116.

14. Thermocouple compensating cables - Testing requirements & sampling plan IS:8784.

15. PVC insulated electric cables for working voltage upto and including 1100 V - IS:1554 (Part-I).

Cable Trays, Conduits

1. Guide for design and installation of cable systems in power generating staiton (Cable trays, support systems, conduits) - IEEE Std. 422, 1977, NEMA VE-1 1979, NFPA 70-1984.

2. -do- Test Standards. NEMA VE-1-1979.

3. Zinc coating "hot dip" on assembled products for galvanising of carbon steel cable trays - ASTMA - 386-78.

Public Address System

1. Specifications for lod speakers - IS:7741 (Part-I, II and III)

2. Code of safety requirement for electric mains operated audio amplifiers - IS:1301

3. Specification for Public Address Amplifiers - IS:10426.

4. Code of practice for outdoor installation of PA system - IS:1982.

5. Code of practice for installation for indoor amplifying and sound distribution system - IS:1881.

6. Basic environmental testing procedures for electronic and electrical items - IS:9000.

7. Characteristics and methods of measurements for sound system equipment - IS:9302

8. Code of practice of electrical wiring installations (System voltage not exceeding 650 volts) - IS:732

9. Rigid steel conduits for electric wiring - IS:9537 (Part-I and II)

10. Fittings for rigid steel conduits for electrical wiring - IS:2667

11. Degree of protection provided by enclosure for low voltage switchgear and control gear - IS:2147.

Vibration Monitoring System

1. API 670 - 1994

2. BS : 4675 Part-2

This is part of Technical Specification No. PE-TS-475-155-A001

ANNEXURE - III

Project : Stage : Package : Supplier : Contractor No. :	LIST OF ITEMS REQUIRING QUALITY PLAN AND SUB-SUPPLIER APPROVAL SUB-SYSTEM :	DOC. NO. : REV. NO. : DATE : PAGE : OF	

S.No.	ITEM	QP/ Insp. Cat.	QP No.	QP Sub-Schedule	QP approval schedule	Proposed sub-supplier	Place	Sub-Suppliers approval status/ category	Sub-supplier Details submission schedule	Remarks

LEGENDS :

1. SYSTEM SUPPLIER / SUB-SUPPLIER APPROVAL STATUS CATEGORY (SHALL BE FILLED BY NTPC)

A - For these items proposed vendor is acceptable to NTPC. To be indicated with letter "A" in the list alongwith the condition of approval, if any.

DR - For these items "Detailed required" for NTPC review. To be identified with letter "DR" in the list.

NOTED - For these items vendors are approved by Main Supplier and accepted by NTPC without specific vendor approval from NTPC. To be identified with "NOTED".

2. QP/INSPN CATEGORY :

CAT-I : For these items the Quality Plans are approved by NTPC and the final acceptance will be on physical inspection witness by NTPC.

CAT-II : For these items the Quality Plans approved by NTPC. However no physical inspection shall be done by NTPC. The final acceptance by NTPC shall be on the basis review of documents as per approved QP.

CAT-III : For these items Main Supplier approves the Quality Plans. The final acceptance by NTPC shall be on the basis certificate of conformance by the main supplier.

UNITS/WORKS : Place of manufacturing Place of Main Supplier of multi units/works.

FORMAT NO. : QS-01-QAI-P-1/F3-R0 1 / 1 Engg.Div./QA&I

ANNEXURE - IV

Project : Stage : Package : Contractor : Contractor No. :	STATUS OF ITEM REQUIRING QP & SUB-SUPPLIER APPROVAL	DOC. NO. : REV. NO. : DATE : PAGE : OF	

S.No.	ITEM/SERVICE	QP/Insp. Cat.	QP Sub. Schedule Approval Schedule	Date of Sub-mission	Date of commt. Appl.	Status Code C/II/I	Proposed Sub-suppliers	Place of manufacturing works	Approval Status	Sub-supplier detail submission schedule	Remarks

FORMAT NO. : QS-01-QAI-P-02/F1-R0 1 / 1 Engg.Div./QA&I

This is part of Technical Specification No. PE-TS-475-155-A001

ANNEXURE - V

एनटीपीसी NTPC	Project : Stage : Contractor : Contractor No. : System :	FIELD WELDING SCHEDULE (To be raised by the contractor) Welding Code	DOC. NO.: REV. NO. : DATE : PAGE : OF

Sl. No.	DRG No. for Weld Location and Identification mark	Description of parts to welded	Matl. Spec.	Dimensions		Process of welding	Type of weld	Electrode filler spec.	WPS No.	Min. pre-heat	Heat treatment		NDT method/ Quantum	RFF		Remarks
											Temp.	Holding time		Spec. No.	ACC Norm Ref.	

NOTES:

SIGNATURE

FORMAT NO.: QS-01-QAI-P-02/F2-R0	1/1	Engg. Div./QA&I

This is part of Technical Specification No. PE-TS-475-155-A001

This is part of Technical Specification No. PE-TS-475-155-A001

MFGR.s LOGO	Manufacturer's Name & Address	MANUFACTURING QUALITY PLAN ITEM SUB-SYSTEM	QP NO. : REV.NO. : DATE : PAGE : OF	PROJECT : PACKAGE : CONTRACT NO. : MAIN-SUPPLIER :

SL. NO.	COMPONENT & OPERATIONS	CHARACTERISTICS	CLASS	TYPE OF CHECK	QUANTUM OF CHECK		REFERENCE DOCUMENT	ACCEPTANCE NORMS	FORMAT OF RECORD		AGENCY			REMARKS
					M	C/N					M	C	N	
1	2	3	4	5	6		7	8	9	D*	**			11

MANUFACTURER / SUB-SUPPLIER	MAIN-SUPPLIER
SIGNATURE	

LEGEND : * RECORDS, IDENTIFIED WITH "TICK" ( ) SHALL BE ESSENTIALLY INCLUDED BY SUPPLIER IN QA DOCUMENTATION
** M : MANUFACTURER / SUB-SUPPLIER
C : MAIN SUPPLIER, N : NTPC
P : PERFORM W : WITNESS AND V : VERIFICATION, AS APPROPRIATE
CHP : NTPC SHALL IDENTIFIED IN COLUM "N" AS 'W'

FOR NTPC USE

DOC. NO. : REV.....CAT.....

REVIEWED BY	APPROVED BY	APPROVAL SEAL

FORMAT - QS-01-QAI-P-09/F1-R1 1/1 ENGINEERING DIV. / QA&I

	Supplier's Name & Address	FIELD QUALITY PLAN		PROJECT :
		ITEM	QP NO. :	PACKAGE :
			REV.NO. :	CONTRACT NO. :
		SUB-SYSTEM	DATE :	MAIN-SUPPLIER :
			PAGE : OF	

SL. NO.	ACTIVITY AND OPERATION	CHARACTERISTICS/INSTRUMENTS	CLASS# OF CHECK	TYPE OF CHECK	QUANTUM OF CHECK	REFERENCE DOCUMENT	ACCEPTANCE NORMS	FORMAT OF RECORD	D*	REMARKS
1	2	3	4	5	6	7	8	9		10.

MANUFACTURER / SUB-SUPPLIER	MAIN-SUPPLIER	LEGEND : * RECORDS, IDENTIFIED WITH "TICK" ( ) SHALL BE ESSENTIALLY INCLUDED BY SUPPLIER IN QA DOCUMENTATION LEGEND TO BE USED : CLASS # : A - CRITICAL, B = MAJOR, C = MINOR; "A' SHALL BE WITNESSED BY NTPC FQA, 'B' SHALL BE WITNESSED BY NTPC ERECTION / CONSTRUCTION DEPTT. AND 'C' SHALL BE WITNESSED BY ERECTION SUPPLIER (A & B CHECK SHALL BE NTPC CHP STAGE)	FOR NTPC USE	DOC. NO. : REV.....CAT.....		
SIGNATURE				REVIEWED BY	APPROVED BY	APPROVAL SEAL

FORMAT - QS-01-QAI-P-09/F2-R0 1/1 ENGINEERING DIV. / QA&I

This is part of Technical Specification No. PE-TS-475-155-A001

CLAUSE NO.	TECHNICAL REQUIREMENTS
	CONDENSATE POLISHING UNIT
1.00.00	**GENERAL**
1.01.00	The Condensate Polishing Plant (CPP) shall treat the condensate of the respective Turbine-Generator (TG) Units of the Power station.
1.02.00	The proposed schematic arrangement of the Condensate Polishing Plant has been shown in the relevant Tender Drawing (P&ID). The Contractor shall propose the complete system including regeneration facilities as per their standard design and as elaborated in this specifications meeting the basic functional requirements. Arrangement of piping and valves shown in Tender drawings are for guidance only.
1.03.00	The Condensate polishing Plant shall consist of one (1) set of Condensate Polishing Unit (CPU) for each TG unit inside TG Building and a common regeneration system. Each CPU shall consist of ~~either four (4) service vessels (4 x 33.33% capacity) or~~ three (3) service vessels (3 x 50% capacity) for each TG Unit.
1.04.00	The regeneration systems shall be external and common to the CPU of all the TG units. For regeneration, resin from the exhausted exchanger vessel will be transferred hydraulically/hydro-pneumatically to this facility. The exhausted resin charge will be cleaned, separated, regenerated, mixed and rinsed before being stored for the next use.
1.05.00	The common influent and effluent headers of each CPU, will be connected to an automatic bypass line(s) to be provided by Contractor. On high pressure signal across the service vessel, the automatic control valve(s) in the bypass line(s) shall open, bypassing the service vessel(s).
1.06.00	Make-up water to the turbine cycle will be added to the condenser hotwell as required. The analysis of the cycle makeup water (DM Water) is exhibited in the specification elsewhere.
1.07.00	In the event of a tube failure in the condenser, circulating water will enter the condensate system and will contaminate it. The design clarified water analysis is exhibited elsewhere in the technical specification and the condensate polishing plant shall be designed for such tube leakage condition as mentioned.
1.08.00	The Condensate Polisher Service vessels, blowers etc. will be located indoor near corresponding units. Regeneration system equipment shall be kept under shed and one meter height parapet wall shall be provided around this shed. Effluent re-circulation/disposal pumps, Bulk chemical storage tanks, unloading transfer pumps and DM water storage tanks for regeneration system etc. shall be kept in open area.
2.00.00	**SALIENT DESIGN DATA**
2.01.00	The design flow (through working vessels) for each condensate polishing plant shall be the corresponding condensate flow of TG unit at VWO (Valve wide open) condition at 3% cycle make-up.

CLAUSE NO.	TECHNICAL REQUIREMENTS

2.02.00 The following dissolved solids concentration and conditions shall be used as a basis of design for the condensate polishing system. The ionic concentrations indicated below are as such.

	Influent	Effluent
Ammonia ppb	100	--
Total solids, ppb	100	20
Silica, ppb	30	5 (refer Note 1 below)
Iron, ppb	50	5
Sodium, ppb	10	2
Chloride, ppb	10	2
pH	8 – 8.5	--
Effluent conductivity after removal of ammonia and amines (micro mhos/cm) at 25^0C.	--	0.1 or less

Note: 1. Silica value shall be 7 ppb as per resin supplier recommendations in case the temperature of the condensate is 50^0C & above.

However, the Contractor to check and reduce the ionic concentrations at the effluent based on their requirement. Under the above operating and design flow through the polisher units, the un-ammoniated resins shall not reach "ammonia break-point" in less than 30 days (720 hrs) of continuous operation while maintaining the above effluent quality. Whenever specific conductivity starts increasing from 0.1 micro mhos/cm in the effluent, it is deemed that 'ammonia break point" is reached. The effluent values indicated above shall be the maximum values.

2.03.00 In addition to the dissolved solids, the influent condensate shall also contain some quantities of suspended solids (crud) derived from the corrosion of water and steam carrying pipelines, turbine condenser and steam side of the feed water heater. Normally this concentration will not exceed about 25 ppb and the Polisher beds shall provide sufficient filtering action to restrict the effluent crud content to less than 5 ppb & same shall be guaranteed.

2.04.00 During start up conditions, quality of the influent may deteriorate to –

TDS, ppb 2000 maximum

Silica, ppb 150 maximum

Crud, ppb (mostly black oxide of Iron) 1000 maximum

For design purposes, average crud loading shall be considered as 500 ppb. Under such conditions, total crud content of the effluent shall not exceed 150 ppb. However, the Contractor to check and reduce the crud content at the effluent based on their requirement.

2.05.00 Under condenser tube-leakage condition, the plant shall be designed for 2000 ppb TDS in addition to the normal influent contaminants stated in as specified at clause no 2.02.00 of this

CLAUSE NO.	TECHNICAL REQUIREMENTS
	Sub-section above. Under such condition, both sodium content and silica content of the effluent shall be limited to 20 ppb maximum. Useful service run between regenerations under the Startup conditions as specified at clause no 2.04.00 of this Sub-section and under condenser tube leakage condition as specified at clause no 2.05.00 of this Sub-section above, shall not be less than 50 hours each.
2.06.00	Influent water qualities as indicated in the above clauses are minimum only. Contractor to check the same and higher values, if felt by them, shall be considered in the design so as to meet the specified effluent quality.
2.07.00	The bed cross section shall be such that the velocity of condensate through it, shall not exceed 2 m/min at the design flow rate. Internal diameter of the service vessels (excluding the rubber lining) of cylindrical type shall be selected meeting the above mentioned velocity criteria. For vessels of spherical shape, where the bed cross section vary, the diameter (excluding the rubber lining) of the vessel shall be selected considering velocity not exceeding 1.75 m/min. The effective depth of the mixed resin bed in the condensate polisher service vessels shall not be less than 1100 mm.
2.08.00	At the design flow rate, the pressure drop in clean condition across the Pre filters including polisher service vessels shall not exceed 2.1 Kg/sq.cm. This pressure drop shall include losses due to pre filters, service vessel, entrance and exit nozzles, distributors, under drains, resins and the effluent resin traps. Maximum pressure drop under dirty conditions across the Pre filters and service vessels including pre filters, service vessel, entrance and exit nozzles, distributors, under drains, resins and the effluent resin traps will be restricted to 3.5 kg/sq.cm including the pressure drop across effluent resin traps
2.09.00	Cation resins shall be regenerated by technical grade hydrochloric acid to IS:265 (concentration 30-33% by volume) and anion resins by sodium hydroxide, rayon grade to IS:252 available as 48% lye or as flakes. In no case, the regeneration levels can not be lower than the values indicated below: a) Cation resin : 125 kg of 100% HCl per cubic meter of resin b) Anion resin : 160 kg of 100% NaOH per cubic meter of resin.
2.10.00	Rinse water outlet header of each condensate polishing unit shall be provided with a pressure reducing station with isolating valves, suitably designed to enable the water entry to the condenser hot well which is operating under vacuum. The pressure reducing station shall consist of either a pressure reducing valve from design pressure of service vessel to condenser vacuum or a combination of orifice plates to reduce pressure from design pressure of service vessel to 2 kg/cm^2 and a pressure reducing valve from 2 kg/cm^2 to condenser vacuum.
2.11.00	While calculating pump head, 10% margin (minimum) shall be considered on the value of friction losses. Pipe friction loss shall be calculated as per Willam-Hazen formula and "C" value to be adopted shall be as described elsewhere in the Technical Specification. Pump recirculation with a regulating valve shall be provided for all the pumping system.

CLAUSE NO.	TECHNICAL REQUIREMENTS
3.00.00	All the design parameters at clause no 2.00.00 of above shall be guaranteed. The effluent quality, the design flow, design service length, chemical consumption for regeneration and the pressure drop across the resin bed in clean and dirty conditions at rated design flow shall be guaranteed by the Contractor.
4.00.00	**SYSTEM REQUIREMENT**
4.01.00	The regeneration process offered by the contractor/its sub-vendor, shall be of Proven Design and shall essentially be the same process by virtue of which the contractor/its sub-vendor is qualified and shall give resin-separation compatible with the desired effluent quality. Documentary evidence shall be submitted by the contractor/its sub-vendor to the employer to establish this requirement during detailed engineering stage, if required.
4.02.00	The contractor shall include inert resin in the system if they feel that it helps in better resin separation.
4.03.00	In case, after separation of resins, there are undesired contaminant resins, the Contractor shall provide a system either to eliminate this cross contamination of resins or to nullify the detrimental effect of entrapped resins to the effluent quality.
4.04.00	**Exchange Resins** a) The contractor shall include with the plant adequate resins for all the condensate polisher service vessels. In addition, separate charge of resin shall also be included for using the resins during commissioning stage of unit. The total number of charges to be supplied by contractor shall be as mentioned in Scope of Supply & Services in technical specification. b) The resins shall be in the form of spherical beads. Base of the ion-exchange resins shall be a copolymer of styrene and divinyl benzene forming a macroporous or macrorecticular structure. Other details are as follows: Cation : Strong acid, with sulfonic acid functional group. Anion : Strong base, with quanternary ammonium (type I) functional group. Inert : Non ionic, compatible with the above resin types. Cation resins shall be supplied in hydrogen form and Anion resins shall be supplied in hydroxide form. c) <u>Physical Properties</u>: (i) Particle size: The resins shall be in the form of spherical beads. All resins, when wet screened with U.S. standard sieves, shall pass through a No.14 sieve not more than 2% shall be retained on a no. 16 sieve, and not more than 2% shall pass through a no. 40 sieve. The particle sizes and densities shall be carefully controlled to facilitate clear separation between the resins during regeneration process.

(ii) Bead Strength:

The average force required to fracture individual beads of cation resins in hydrogen form, anion resins in hydroxide form, and the inert resins, shall exceed 350 grams. Not more than 5% of the beads tested in each batch shall get fractured by forces less than 200 grams.

d) Chemical Properties:

(i) Total wet volume ion-exchange capacities in equivalents/liter shall not be less than the following:

Cation in hydrogen form : 1.7

Anion in hydroxide form : 0.8

(ii) The resins shall contain a minimum of metallic and organic impurities consistent with good processing. The processing procedure will include rinsing the resins with demineralized water before packing, so that further rinsing will not be required before use. Foreign objects in the resins shall constitute a basis for its rejection.

(iii) Cation-Anion resin ratio shall be 1.5 parts cation to 1.0 part anion by volume. In case the contractor's process require any non ionic resin the same shall represent at least 10% of the bed volume, but not less than 15 cm of the bed depth in the resin separation tank of the external regeneration facility.

(iv) Manufacturer:

It is not the intent to pre-select any specific brand name for this application. Resins will be accepted by the Employer strictly on their merits. The resins shall be of reputed manufacturer with adequate past record of successful service for not less than 3 years in similar application.

(iv) Contractor shall submit all necessary data and information in this regard along with his proposal. Some of these possible resin terms are as follows:

1) Duolite C - 26 TR & A - 161 TR Rohm and Hass 252 C & TRA-900C.
2) Dowex MSC-1, MSA-1 C grades.
3) Inert resin – Duolite sec, Rohm & Hass 359 or Dow-buffer beads.

Above listing is by no means exhaustive, and shall not be construed to be a recommendation for their selection for this plant. Contractor shall fully satisfy himself as to the suitability of the resin system selected by him before offering it in his proposal.

e) The resin shall be suitable for the condensate temperature that may be achieved in all operating regimes of TG cycle. However, the anion resin shall be suitable for a temperature of 60^0C.

CLAUSE NO.	TECHNICAL REQUIREMENTS
4.05.00	**Condensate Polishing Units** a) Condensate polishing unit of each TG unit shall consist of the following: 1) Condensate polisher vessels complete with condensate inlet and outlet connections, pre-filters, connections for resin transfer to and from the vessels, bed support-cum-under drain system, inlet water distributors, air distribution arrangement for resin mixing, all fittings and appurtenances etc. as specified and as required. 2) External resin traps at the outlet of each of the polisher vessels, designed for in-place manual back washing. 3) Condensate inlet and outlet headers for each installation with pipe connections to the condensate polisher vessels. 4) Resin transfer headers and pipe lines connecting the external regeneration facility to the condensate polisher vessels of each installation. 5) Rinse water outlet headers from condensate polisher vessels of each installation upto the condenser hotwell. 6) All necessary valves and fittings for the installations with actuators necessary for their remote operation. These shall include suitable fool-proof arrangement to prevent accidental over pressurization of the resin transfer pipeline and regeneration facilities connected to it, which are designed for pressure much lower than that of the polisher service vessels. 7) A common drain header for the condensate polisher service vessels of each unit upto the hotwell. 8) All necessary drains, vents and sampling points, with valves as specified and as required. 8) Gland sealing water piping for the valves in the rinse water line. 9) Emergency bypass between the condensate influent and effluent headers with its automatic valve, isolation valves on both sides and controls. 10) Two (2) nos. (2x100%) (1W+1S) capacity oil free type, air blowers to supply necessary air for mixing the resins in the service vessels for each TG unit CPP. 12) Complete instrumentation, controls etc for automatic operation. b) Operating pressure for service vessels shall be normal operating pressure of condensate extraction pump. Service vessel design pressure shall be equal to shut off pressure of condensate extraction pumps plus 5% margin. c) Design temperature of service vessel and their internals/appurtenances shall take care of all operating regimes including HP-LP bypass operation and minimum 70^0C. Process design temperature shall be based on all operating regimes of TG cycle and

CLAUSE NO.	TECHNICAL REQUIREMENTS

minimum 52^{0}C. However, short term excursion of temperature upto 60^{0}C is also expected.

d) **Emergency bypass system**:

1) Each condensate polisher service unit shall be provided with an automatic bypass system for the condensate polisher on the condensate inlet and outlet headers of the unit with a set of control valve with its isolation valves on the upstream and down stream sides of the control valve.
2) In the event of excessive pressure differential between the condensate inlet and outlet headers, this control valve will open automatically to bypass requisite quantity of condensate to prevent this pressure differential from exceeding a preset limit when all vessels/ two vessels/one vessel/no vessel is in operation.
3) Contractor to provide either 2x50% capacity valves or 1x100% control valve to achieve proper control under all operating conditions.
4) Complete instrumentation and controls required to complete the system, shall also be installed by him.
5) The isolation valves shall be provided with geared operators for manual operation. The entire system shall be designed for an internal pressure of at least the design pressure of service vessels and for a maximum condensate flow of not less than total design flow of all the working service vessels.
6) The control system shall be so designed that the control valve is able to bypass 33% or 50% of rated flow (based on offered vessel configuration) when any of the service vessel is out of service, 67% or 100% (based on offered vessel configuration) of flow when two vessels are taken out of service and 100% of flow when all the service vessels are out of service.

4.06.00 **External Regeneration Facility (Regeneration Plant)**

a) The Contractor shall propose the complete system including regeneration facilities as per their standard design and as elaborated in this specifications meeting the basic functional requirements. One (1) common facility for regeneration of the ion-exchange resins from the condensate polishers of all the turbo-generator units shall be provided utilizing three (3) tank concepts and consisting of:

1) Resin Separation & Cation Regeneration Vessel.
2) Anion Resin Regeneration Vessel.
3) Two (2) nos of Mixed Resin Storage Vessels.
4) Resin injection hopper, complete with a water ejector system for resin make-up. Resin injection hopper shall be sized to handle upto 150 litre of as received new resins.

CLAUSE NO.	TECHNICAL REQUIREMENTS

5) All internals, fittings and appurtenances for these vessels. Common waste effluent header with one resin trap designed for in place manual backwashing.

6) Two (2) nos. (2x100%) (1W+1S) Oil free type air blowers with electric motor drives, for supplying all the process air required for cleaning of the resins and their regeneration processes.

7) Each blower shall be complete with motor, V-belt drive with belt guard, inlet filter/silencer, flexible couplings discharge snubber, all mounted on a single base. Relief valve(s) shall be provided as required.

8) Two (2) nos. of (2x100%) (1W+1S) DM water pumps with electric motor drives for water supply for chemical preparation & for dilution water supply during dosing. These DM water pumps will take suction from DM water storage tanks.

9) Two (2) nos. of (2x100%) (1W+1S) DM water pumps with electric motor drives for water supply and transfer of resin from service vessel to regeneration vessels and vice-versa. These DM water pumps will take suction from DM water storage tanks. These Pumps shall also be used for backwashing of Pre-Filters.

10) Bulk Acid & Alkali Storage Tanks and Acid/alkali unloading facilities (if separately identified/included in the scope of the contractor as shown in relevant tender drawing).

11) Acid solution preparation & dosing facility.

12) Alkali solution preparation and dosing facility.

13) DM Water Storage tanks for regeneration system (if separately identified/included in the scope of the contractor as shown in relevant tender drawing)

14) Effluent neutralization system (if separately identified/ included in the scope of the contractor as shown in relevant tender drawing)

15) All necessary piping, valves & fittings i.e. all piping between the external regeneration facility and the skids for chemical dosing and acid/alkali preparation, demineralised water piping to the chemical dosing, acid/alkali piping from external bulk storage tanks to respective preparation skids, acid/alkali solution pipelines from preparation skids to respective dosing skids, chemical solution piping for acid and alkali from the dosing skids to the external regeneration facility, instrument air piping etc. These shall include all drains, vents and sampling points with valves as specified and as required. The entire installation shall be complete with all pipe supports, hangers etc.

16) Complete instrumentation, controls etc necessary for automatic operation.

17) The equipment and system of external regeneration facilities described above is indicative and for guidance only. Based on the regeneration process offered, the contractor may make suitable modifications in the equipment to make the system complete in all respect.

b) Free Board: The pressure vessels in the common external regeneration facility shall be provided with adequate freeboards over the top of the settled resins, to minimize resin loss during their use. Minimum freeboards to be are as follows:

(i)	Mixed resin Storage vessel	:	50%
(ii)	Resin separation vessel	:	75%
(iii)	Cation regeneration vessel	:	75%
(iv)	Anion regeneration vessel and activated carbon filter	:	75%

However, if a vessel is used for more than one service, then the vessel design shall be based on the service which gives maximum freeboard.

c) Design pressure of the condensate Polisher Service Vessels is indicated elsewhere. For all other Pressure vessels, the design pressure shall be at least 8 kg/cm² (g).

d) All equipment for dosing of acid and alkali solutions shall be rated to provide a maximum dosing rate at least 20% in excess of that required from process calculation.

e) In order to facilitate erection at site chemical dosing preparation equipment shall be mounted on structural steel skids and assembled (including piping) at the manufacturer's shop, to the maximum extent possible, prior to shipping. The number of mechanical connections shall be minimised by the use of pipe headers wherever possible. Following is a recommended listing of the main equipment skids to be furnished under this package. The Contractor may also supply and install these equipments independently instead of assembling the skids.

(i) Alkali Solution Preparation skid (1 no):

This shall comprise one (1) alkali preparation tank complete with electrically driven stirrer and dissolving basket, two (2) (2x100%) (1W+1S) nos. Alkali solution transfer-cum-recirculation pumps of suitable capacity and head to meet the system requirements, one (1) nos. alkali day tank, one (1) no. activated carbon filter for alkali, all interconnecting piping, valves and fittings as required for the system. This facility shall be used for preparing alkali solution from alkali flakes and prepared solution shall be transferred to bulk alkali storage tanks or in day tanks.

(ii) Alkali Dosing Skid (1 no) & Acid Dosing skid (1 no):

The acid and alkali dosing equipment for regeneration of condensate polishing resins shall be mounted on skid, which shall consist of at least the following:

1) Positive displacement type metering pumps with electric motor drive; two (2) (2x100%) (1W+1S) for dosing hydrochloric acid (30% conc.) and two (2) (2x100%) (1W+1S) for dosing sodium hydroxide solution.
2) All necessary suction and discharge piping for these pumps including all strainers, valves and fittings as required, upto the mixing tee with the diluent water.
3) Diluent water supply separately, for acid and alkali, each provided with an automatic on off valve, a throttling valve for setting of flow, a local flow indicator, and a mixing tee where the chemicals get injected into the water stream.
4) A hot water tank with electric immersion heater.
5) Two (2) acid measuring tanks of adequate capacity to hold acid for two (2) regenerations.

All the equipment, piping etc. shall be assembled on two (2) structural steel skids one (1) for acid and one (1) for alkali dosing equipment. The Contractor shall supply all anchor bolts, foundation plates, sleeves, nuts, inserts etc. to be embedded in concrete for these equipment skids. Each equipment skid shall be provided with suitable lifting lugs, eye bolts etc. to facilitate erection and maintenance.

5.00.00 TECHNICAL REQUIREMENTS OF EQUIPMENTS

5.01.00 **Bulk Acid & Alkali Storage Tanks (applicable if included in scope of supply)**

Description / Data	Acid Storage tanks	Alkali Storage Tanks
Numbers	Two (2)	Two (2)
Dimensions (Diameter, length & thickness)	As per BS: 2594	
Useful capacity	Each tank to store one (1)month requirement of all the units working vessels or minimum as specified in scope of supply in Part-A of Technical Specification.	Each tank to store one (1)month requirement of all the units working vessels or minimum as specified in scope of supply in Part-A of Technical Specification.)
Type & pressure class	----Horizontal, with dished (Torospherical) ends, Atmospheric----	
MOC	Mild Steel (as specified)	

	Internal Painting/ lining	———Rubber lining (4.5 mm thick) ———	
	External painting	----As specified elsewhere----	
	Concentration	30-33% HCl	48% NaOH
	Accessories	Vent, overflow, drain, sample connections, fume absorbers, manholes, Operating platforms etc.	Vent, overflow, drain, sample connections, manholes, Operating platforms etc.

5.02.00 **Acid & Alkali Unloading Pumps (applicable if included in scope of supply)**

Description / Data	**Acid Unloading Pumps**	**Alkali Unloading Pumps and Alkali transfer cum recirculation pumps**
a) Numbers. Required	Two (1W+1S) (2x100%)	Two (1W+1S) (2x100%) Unloading pumps & Two (1W+1S) (2x100%) Alkali transfer pumps
b) Type	———Horizontal, Centrifugal ———	
c) Pump Speed	———Maximum 1500 rpm ———	
d) Capacity & head (min.)	As required	As required
e) Liquid to be handled	30-33% HCl	5 to 50% NaOH
f) MOC	Polypropylene or equiv. for HCl	Stainless Steel-316
g) Reinforced Rubber hoses	Minimum two (2) nos. of size 80 mm NB of Min. 10 m. with isolation valves	Minimum two (2) nos. of size 80 mm NB of min. 10 m. with isolation valves
h) Accessories	--Coupling Guards, Drain plug, Vent valve, Suction hoses,isolation valves, Y-type strainers etc. as required as per manufacturer's standard---.	

5.03.00 Chemical Preparation Tanks

Chemical Tanks	**Alkali Preparation Tank**	**Alkali Day Tank**	**Acid Measuring Tank**
a) Number required	One (1)	One (1)	Two (2)
b) Type	-Vertical Cylindrical, with dished end at bottom; Atmospheric-		

CLAUSE NO.	TECHNICAL REQUIREMENTS

c) Useful capacity Minimum 10 Cu.m --Each tank shall be adequate to hold Chemical for 125% of one regeneration--

d) MOC ——M.S. with 4.5 mm thick rubber lining inside ———

e) External protection ———————— As specified elsewhere ————————

f) Accessories Required Vent, Overflow, Drain connection, motor driven stirrer (only for alkali preparation & day tanks), Dissolving basket in SS-316 construction (only for alkali preparation tanks), fume absorber etc. as required as per manufacturer's standard.

5.04.00 DM Water Pumps

Description / Data	DM Water (for Resin Transfer and Pre-Filter backwash) Pumps	DM Water (for Regeneration) Pumps
a) Numbers	Two (1W+1S)(2x100%)	Two (1W+1S)(2x100%)
b) Type	————Horizontal, Centrifugal ————	
c) Pump Speed	————Maximum 1500 rpm ————	
d) Capacity & head	As required	As required
e) MOC		
i) Casing	————ASTM A 351 CF 8M ————	
ii) Impeller	————ASTM A 351 CF 8M ————	
iii) Wearing rings	———As per manufacturer's Standard ———	
iv) Shaft	———————— SS 316 ————————	
v) Shaft Sleeves	———————— SS 410 ————————	
vi) Mechanical Seal	———As per manufacturer's Standard ———	
vii) Accessories	Coupling Guards, drain plug, Vent valve, Suction hoses, isolation valves, Y-type strainer etc. as required as per manufacturer's standard.	

5.05.00 **Dosing Pumps**

Description / Data	Acid	Alkali
a) Numbers	Two (1W+1S) (2 x 100%)	Two (1W+1S) (2 x 100%)
b) Type	--------Simplex Positive Displacement Type; hydraulically Operated Diaphragm Type-----	
c) Whether suction strainer required	———— Yes ————	

CLAUSE NO.	TECHNICAL REQUIREMENTS

d) Accessories:

i) Pressure Dampeners ——————Two (2)——————

ii) External safety relief valve (in addition to in-built safety valve) Two (2) Two (2)

e) Maximum pump stroke speed ——————— 100 per minute————————

f) **MOC**

1) Liquid End (Pump Head, Valve Valve housing, valve spring etc.). PVC AISI: 316

2) Diaphragm ——————P.T.F.E.————————

3) Packing ——————P.T.F.E.————————

4) Shaft ———— Hardened steel EN 8 (BS:970)————

5) Worm & worm wheel (If applicable) ——————— Manganese Bronze ————————

6) Connecting rod ——————— Manganese Bronze ————————

7) Cross head guide ——————————— Bronze ——————————

8) Capacity & Head ————————— As per system requirement ————

5.06.00 **Pre Filter (Cartridge Filter)**

---

a. Number : Two (2) x 50% for each TG unit CPP.
b. Type : Back washable
c. Design Code : ASME SEC-VIII DIV I
d. Mesh size : 20 micron/proven design
e. MOC of Cartridge : Polypropelene/ proven design

5.07.00 **Hot Water Tank (for alkali)**:

For heating of alkali diluent water, 2x50% electrical heating coil in a tank of mild steel rubber lined construction shall be provided. The capacity of tank shall be minimum 20% higher than the maximum water demand. This tank shall be provided with burn out protection, pressure relief valve, level transmitters/switches, temperature indicator etc. The heater shall be controlled by the temperature switches provided on the tank. The heaters shall be sized for heating the water from a temperature of 15 ^{o}C to 50 ^{o}C at the outlet. The water shall be heated to the required temperature within 5 hours.

CLAUSE NO.	TECHNICAL REQUIREMENTS
5.08.00	**Activated Carbon Filter (For Alkali):** Rated flow of the filter shall not be less than the design capacity of the alkali transfer-cum recirculation pump, and the maximum velocity through the filter for this flow shall not exceed 12 meters/hour. Depth of the filter material shall not be less than 1 meter. The filtering medium shall be granulated activated carbon, meeting following minimum requirements. Total Surface area : Not less than 850 m^2/g. Bulk density : Not less than 400 kg/m^3. Iodine number : 850 minimum Uniformity coefficient : 1.9 or less Abrasion number : 70 minimum Ash : 8% maximum Mean particle diameter shall be about 1.5-1.7 mm with following size distribution: On 20 mesh : Less than 3% Through 40 mesh : Less than 10% Through 50 mesh : Less than 1% The filter shall be provided with all necessary valves and connections for manual backwashing and rinsing with demineralized water. Rate set valves shall be provided with adjustable limit stops for setting backwash and rinse rates.
5.09.00	**Air Blowers** Each blower shall be complete with motor, V-belt drive with belt guard, inlet filter/silencer, flexible couplings and discharge snubber, all mounted on a single base. Relief valve (s) shall be provided as per manufacturer's standard.
5.10.00	**DM Water storage tanks for Condensate polishing Plant:**
5.10.01	Two (2) numbers of DM Tanks shall be provided (if included in scope of supply in Part-A of Technical Specification) and the tanks shall be of vertical cylindrical type in Mild steel construction internally painted with epoxy. The design features of the tanks & accessories shall be as per IS: 803. However, minimum thickness of shell plate, bottom plate and roof plate shall be 8 mm, 10 mm and 6 mm receptively. The tanks shall be provided with CO_2 absorber and over flow seal pit. capacity of each tank shall be equivalent to 1.5 times the DM water required for one (1) regeneration operation of working vessels of one (1) TG unit including resin transfer operations from Condensate Polishing Plant to regeneration plant and regeneration plant to Condensate Polishing Plant and for preparation of chemicals for one (1) regeneration of working vessels of one (1) TG unit or as mentioned in Scope of Supply in Part-A of Technical Specification whichever is higher. However, the capacity of each DM water storage tank shall be 600 m^3 minimum. Water inlet

CLAUSE NO.	TECHNICAL REQUIREMENTS

pipe shall led up to the bottom of DM tanks (preferably through perforated pipe) to avoid turbulence/agitation.

5.11.00 **Effluent Neutralisation System:**

Neutralising pit of RCC construction with acid/alkali resistant tiles shall be provided to receive drains from the regeneration. If separate pit is envisaged for Condensate Polishing Plant, (as shown in relevant Tender drawing), contractor shall design the system so that pit shall be provided in two (2) sections and each section shall have a holding capacity of 1.5 times the waste effluent from each regeneration of each vessel. For disposal of neutralized effluent pumping, required number of pumps (as mentioned in Scope in Part-A of Technical Specification & shown in relevant tender drawing) shall be provided. Proven agitation system like air agitation/venturi mixing shall be provided, in addition to recirculation from pumps.

The waste recirculation/disposal pumps shall conform to the following technical requirements:

Effluent re-circulation cum-disposal pumps:

a) Number : Three (3) numbers (1W+1S+1Maint. standby)

b) Type : Horizontal centrifugal single stage with priming system

c) Minimum Capacity and total head of each pump : Suitable to pump the total volume of one section in 8 hours (Minimum 50 Cu.m/hr). Head to suit the requirement

d) Suction condition : Suction from priming chamber

e) Casing & Impeller material : Rubber lined/ FRP lined, Cast iron IS: 210 Grade FG 260

f) Shaft material : SS-316

g) Number of priming chambers : Two (2)

Dosing of acid, alkali and lime shall also provided to neutralized effluents before disposal along with all piping, valves etc. including lime solution preparation facilities for neutralization. One (1) number of lime tank of Stainless steel construction of effective capacity of minimum 2 m^3 shall be provided with dissolving basket, agitator (slow speed), platform/ladder, manhole, overflow/drains etc.

Waste water generated during regeneration: The DM water used for resin transfer operations shall be collected in a RCC pit with solvent free epoxy coating in regeneration area having holding capacity 1.5 times the capacity of DM water required for transferring the resins or 50 m^3 (min) and the same shall be pumped to employer's CW channel for recycle/re-use by means of two (2) numbers (1W+1S) (2x100%) of waste water recycle pumps. The material of construction of pumps shall be SS-316 (casing, impeller and shaft).

CLAUSE NO.	TECHNICAL REQUIREMENTS
5.12.00	**Piping** a) Contractor shall design, supply and erect the piping between the service units and the common external regeneration facility, for transferring the exhausted and regenerated resins as required. b) All outdoor piping shall be laid above ground and generally laid in pipe trestles including crossing of road/pipe/cable trenches if any. Piping between chemical tanks area and regeneration area etc may be laid on pedestals if layout permits. c) The resin transfer pipeline arrangement shall avoid any sharp bends which cause segregation of the mixed resins, and pockets where the resins can get trapped. Suitable observation ports shall be provided in all critical areas to enable the operator to monitor completeness of the resin transfer operations. All necessary arrangements for venting and draining of the pipeline shall be provided. d) The resin transfer pipeline shall be sized for a flow velocity of between 2.3 - 3.0 m/s. For other service, design criteria in piping shall be generally in line with design philosophy described elsewhere in Technical Specification. e) Remotely operated valves suitably interlocked with the plant operation, shall ensure that the resins get transferred to and from only the particular service vessel which has been selected by the operator. f) All lined vessel connections and connections in unlined vessels (25 NB and larger) shall be flanged to ANSI 125 lb class except the Polisher service vessels which shall be ANSI 300 lb class. Flat face flanges shall be used throughout. Nozzle material shall be ASTM A-106 Gr.B. Sch.80 pipe for all vessels. All flanged connections shall be supplied complete with matching counter flanges, nuts, bolts and full face gaskets. All the pipelines in service vessels area where pressure may attain same as service vessel shall be designed for 300 lb class. g) MOC for piping: 1) Pipes handling DM Water shall be stainless steel type 304 Sch-40 and Resin transfer pipeline shall be of stainless steel type 304 Sch-40 seamless. 2) Pipeline handling Alkali shall be of stainless steel type 316 Sch.10 (minimum). 3) Piping for Acid service (HCl) shall be of carbon steel Polypropylene lined/MSRL/CPVC as per ASTM F441 (Sch.80). 4) Piping for air service shall be of hot dip galvanized (heavy grade) steel. 5) Piping for condensate near condenser Polisher service unit shall be of seamless carbon steel ASTM A-106 Gr B all welded construction with 300 lb flange connection or higher class as per requirement. 6) Pipe handling waste water during resin transfer shall be of stainless steel type 304 Sch.40

CLAUSE NO.	TECHNICAL REQUIREMENTS
5.13.00	**Valves** 1) The isolation valves on the resin transfer line shall be of eccentric plug type/ball valve (full bore type) of Stainless steel construction. 2) Emergency bypass control valve shall be of double flanged/lugged wafer butterfly type. Isolation valves of wafer (lugged) type butterfly valves (resilient material seated, to ensure bubble-tight shut off) shall be provided on the upstream and down stream sides of the control valve. The material of construction of valves handling condensate in service vessel area shall be SS-316 (for body, disc and shaft). Seat/seat rings should be of Teflon/titanium back up rings. Seal shall be of Teflon or equivalent. 3) Isolation Valves handling Acid, Alkali, Ammonia etc shall be of diaphragm type in MSRL (Mild steel Rubber lined) construction. 4) Isolation Valves handling DM water shall be Butterfly or gate or globe type and shall be of SS - 304 construction. 5) Non-return valves shall be constructed of SS-304 for DM Water & SS-316 for alkali. For Hydrochloric acid, non-return valve shall be dual plate/swing check/lift ball check type of suitable material or as per manufacturer's standard practice. 6) All valves in service vessels area where pressure may attain same as service vessel shall be designed for 300 lb class minimum.
5.14.00	**Pressure Vessels & Miscellaneous Items** a) All pressure vessels shall be designed and constructed in strict accordance with the ASME code Section VIII or acceptable equivalent international standard. Suitable mill tolerances shall be considered for determining the thickness of the shells and dished ends. A minimum thinning allowance of 2 mm shall be considered for the dished ends of torospherical type. b) Pressure vessel ends shall be of dished design and constructed by forging, pressing or spinning process. Spherical vessels for CPU service vessels are acceptable. Conical or flat ends shall not be accepted. All the atmospheric vessels shall be at least 6 mm thickness. c) All pressure vessels shall be fabricated from carbon steel plates to SA-515/516 Gr. 70 and lined internally. The lining shall be of rubber having a hardness of 65 (+/-) 5 Shore-A meeting the requirements of IS:4682, Part-I. The lining shall be applied in three layers, resulting in a total thickness of not less than 4.5 mm anywhere on the internal surfaces of the vessels. The lining shall extend over the full face of all flanged connections and shall have a minimum thickness of 3 mm in all such external areas.

CLAUSE NO.	TECHNICAL REQUIREMENTS

e) Vessel internals shall meet the following requirements

1) Inlet water and regenerant distributor:-

Hub and internals diffuser splash plate or header and perforated laterals. Material of construction shall be SS-316 except for acid service which will be of Hastealloy-B.

2) Under drains:-

Same as above with screened laterals with internal perforated pipes and rubber lined flat bottom. For resin separation/regeneration/mixed resin vessels, it may have fully screened bottom (NEVA- clog type with pora septanurese screen, fully supported by subway grid or equal).

3) All internal fasteners shall be of SS-316 and heavy duty locknuts shall be used throughout.

e) Resin Traps:

Outlet of each condensate polisher vessel and waste effluent header of the common regeneration shall be provided with a resin trap. Pressure drop at design flow through a clean resin trap shall not exceed 0.35 kg/sq.cm.

Resin trap shall be of rubber lined steel construction and internals (cord & screen) shall be of JOHNSON SCREENS IRELAND or equivalent (SS-316) construction. Resin traps of process effluent line shall have screen opening not exceeding 120% of associated process vessel under drain screen opening. Other resin traps shall have screen opening of 60 mesh. In place manual back flushing shall be provided for all resin traps. For activated carbon filter, resin trap/media trap shall be provided as per manufacturer's standard.

6.00.00 CONTROL & OPERATION

6.01.00 **General**

a) It is not the intent to specify here the complete details of the control system. Basic type of controls required has been specified below. The contractor shall submit the complete detail of the system offered by him like the extent of automation offered, operation of the complete system, logic/flow diagrams, type and details of the presentation of information, the type of mimic, hardware details etc. along with detailed circuit descriptions.

b) It shall be possible to operate in Auto/Semi-Auto /Manual mode. In 'Auto' mode, once the sequence has been initiated, it shall proceed from step to step automatically. In 'Semi-Auto' mode each step shall be performed only after initiation by the operator. In 'Manual' mode complete operation shall be by the operator by operation of the Control switches on the panel.

c) 'Close-Auto-Open' control facility shall be provided from OWS/control panel for solenoid valves. In 'Auto' position, the valves shall receive close / open command from the Control system.

d) 'Stop-Auto-Start' Control facility shall be provided from OWS/control panel for the various drives. In 'Auto' position, the drives shall receive stop/start command from the Control system.

e) On control system failure, it shall be possible to operate the valves by means of manual operator of solenoid valves too.

f) The control system shall link the various steps such as closing/opening of different valves, starting/stopping of various pumps etc. which form a sequence. The logic system shall adhere to the correct sequence of operation and predetermined time intervals. The system shall have interlocks so that, criteria necessary for each step are complete prior to proceeding to the next step.

g) It shall be possible to switch mode of operation from one to the other at any moment and the operation shall proceed on the newly selected mode from that time.

h) For steps, which require frequent time adjustment, it shall be possible to change the time setting from the front of the panel. For all other steps it shall be possible to adjust the time setting from inside the panel.

i) For all sequences, the current step number, set time of the step, elapsed time of the step and the total elapsed time of the sequence shall be indicated in the OWS/control panel.

j) A mimic for the CPP scheme and Regeneration system scheme shall be provided. Status of various vessels, drives, valves etc shall be indicated by on the mimic.

k) The system shall incorporate the necessary safety features. During automatic sequential operation, if any pre-requisite criterion is not fulfilled or missing for a pre determined time interval, the steps should not proceed further, and Alarm shall be provided. Missing criteria, sequence, which is under hold up etc., shall be displayed.

l) The safety system for any sequence/step shall check the opening of the required valves and closure of the remaining valves of the plant to avoid mal-operation.

m) Wherever standby equipments are provided, it shall be possible to select each of the drive on 'standby' duty.

n) The detailed logic for the sequence and for each of the drive shall be subject to the Employer's approval.

o) Start, progress and stop of each of the sequence shall be annunciated.

p) The status of vessels of Condensate Polishing Plants shall be available in all the CPP panels of all TG units and as well as in the regeneration plant control panel. Similarly,

CLAUSE NO.	TECHNICAL REQUIREMENTS

the status of regeneration plant status shall be available in the panels of Condensate Polishing Plants of all TG units.

q) Details of control system specification and configuration details shall be as elaborated in the relevant C&I sub section of the technical specification.

6.02.00 **Control & Operation of the Condensate Polishing Unit**

a) It shall be possible to select each of the CPU vessel for any of the following operations or mode:

(1) Standby (Applicable for where spare service vessel (s) are provided)

(2) Service

(3) Isolation from service.

(4) Resin Transfer from CPU vessel to Regeneration plant.

(5) Resin Transfer from Regeneration plant to CPU vessel

(6) Rinse mode.

Each mode or operation is described as below:

b) Standby Mode:

(1) Among the vessels, any one of the vessels may be selected in this mode.

(2) Under this mode, the vessel, which was regenerated in previous cycle and filled with regenerated resin, shall be kept ready for next Service cycle.

(3) The selection of any vessel for Standby mode shall be initiated by operator and there shall be indication about the details such as "Condition of the resin; Whether it is filled with regenerated resin or exhausted resin, whether the standby vessel has undergone rinse cycle or not, date and time of receipt of regenerated resin and completion of rinse cycle etc.

c) Service mode:

(1) Service flow rate for each polishing vessel shall be monitored. During periods of low condensate flow the operator may select to remove one of the vessels from service by a manually initiated automatic sequence.

(2) High differential pressure across the influent and effluent headers will cause an alarm and bypass system shall be initiated as described elsewhere in this section.

(3) By observing the individual vessel flow indicators, or conductivity at vessel outlet the operator can determine which vessel is contributing most to the pressure drop and is in need of resin cleaning.

(4) Cation conductivity indicators shall monitor the polishing system influent and effluent streams as well as the discharge of each service vessel. A high influent conductivity alarm will alert the plant operator that a problem condition such as air or condenser cooling water leakage has occurred. An alarm at the

power station main control room shall also be initiated. A high effluent header or service vessel conductivity alarm will alert the operator to the need for regeneration of a polishing vessel.

(5) When the vessel under Service mode is ready for regeneration, the operator shall change the same into "Isolation mode" in the panel. Subsequently the "Standby vessel" shall be selected for "Service mode" from the OWS/control panel. The selection shall follow, required sequences such as pressurization of the vessel, checking of the effluent quality and putting the vessel in service on satisfactory effluent quality.

(6) The differential pressure (DP) across the inlet and outlet headers of CPU services vessels shall be measured and the bypass control valve will also modulate as per the DP. The bypass system shall also be actuated upon high condensate temperature.

e) Isolation from Service:

Normally "Service Vessel" once exhausted shall be isolated from service till the "Resin Transfer" operation is initiated. In addition, provision to be kept for isolation of one or all the vessels from service if required by operator from the panel.

f) Resin Transfer from CPU vessel to Regeneration plant:

(1) When a vessel in a service mode needs regeneration as stated above, the resin transfer from the particular vessel to the regeneration plant shall be initiated from the panel of the condensate polishing plant.

(2) The transfer of resin from the service vessel shall include operations such as isolation of the service vessel, hydraulic transfer of the resin to the external regeneration system (resin separation vessel) and the complete drain down of the service vessel.

(3) The sequence of "Resin Transfer" operation shall be initiated from the Control system in panel of CPP and shall be controlled in the regeneration Panel.

(4) The completion of the operation shall be exhibited in the panel.

g) Resin Transfer from Regeneration Plant to CPU Vessel:

(1) When the regeneration is completed in the regeneration plant, the resin shall be transferred to the empty vessel of Condensate Polishing plant.

(2) This shall be initiated by the operator from the control panel of condensate polishing plant of the unit from which resin was transferred to the regeneration plant in previous service. Provision shall also be kept to transfer the regenerated resin to any of the empty vessel of the CPP of any of the TG unit if required.

CLAUSE NO.	TECHNICAL REQUIREMENTS
	(3) The transfer of resin from the regeneration plant shall include operations such as hydraulic transfer of the resin and the complete drain down of the water. (4) The sequence shall be initiated from the panel of CPP and shall be controlled in the regeneration Control Panel. (5) The completion of resin transfer operation shall be exhibited in both the Control panels. h) Rinse mode: (1) After transfer of regenerated resin from the regeneration plant to the empty condensate polisher vessel, this rinse cycle shall be initiated from the Control system of the respective unit so that the vessel may be rinsed and kept ready for next service cycle. (2) The rinse mode shall be a manually initiated full automatic sequence. This sequence shall include the rinse down step using condensate at a suitable rate until the unit effluent quality is acceptable for boiler feed water. Prior to rinsing, the resin shall be given air scrub by means of air blowers provided near the CPP. (3) The effluent quality shall be determined by conductivity monitoring of the rinse water outlet, which is returned to the condenser hotwell for recycle. (4) Cation conductivity values shall be monitored and interlocked to prevent advancing of the automatic sequence until the rinse down is complete. (5) The completion of rinse operation shall be annunciated in the panel so that the rinsed vessel may be selected for "Standby mode" or "Service mode" as per requirement.
6.03.00	**Regeneration Control System**
6.03.01	A manually initiated automatic sequence for physical cleaning and chemical regeneration of the resin shall be provided. Control for chemical dosing system and alkali preparation facility shall also be provided in it.
6.03.02	Physical cleaning of the resin shall consist of three steps, drain to level, air scrub and rinse. The air scrub and rinse steps are of short duration, approximately 1 and 2 to 3 minutes respective time. However the program will allow the operator to increase or decrease the number of times the sequence is repeated to meet the requirements existing at that time.
6.03.03	The chemical regeneration is a many step sequence. This will include hydraulic reclassification of the resins and the transfer of the resins to the respective regeneration vessels. The Contractor may include a layer of inert, intermediate density resin to achieve a better separation of the cation and anion resins, improve resin regeneration, and reduce leakage. The separated resins are then back washed, regenerated with hydrochloric acid and sodium hydroxide solutions respectively and then rinsed. Following the rinse step the resins

CLAUSE NO.	TECHNICAL REQUIREMENTS
	shall be given an air scrub followed by a good backwash. The resin is then transferred back to the resin separation vessel and the resins are air mixed. The mixed resins after regeneration are given a final rinse with the discharge conductivity being monitored. The quality of this discharge will determine if the regeneration has been effective. If the quality is not satisfactory the regeneration sequence must be repeated. If satisfactory, the mixed resin is transferred to the resin storage vessel.
6.03.04	A resin mixing and final rinse may occur in the resin storage vessel provided that the system design will permit direct return of the resins to the resin separation vessel in the event of an unsatisfactory regeneration.
6.03.05	Upon satisfactory completion of regeneration, the status shall be annunciated audio-visually in the regeneration system OWS/control panel and as well as in the Balance of Plant Control System. This repeat annunciation in the CPP OWS/panel shall facilitate the operator to initiate resin transfer operation from the regeneration plant to the desired vessel of the Unit in which the service vessel is empty.
6.03.06	Upon resin transfer operation from regeneration plant as described by the operator from the Control System, the regeneration plant shall be ready to receive next batch of exhausted resin from any of the CPP. The status of regeneration plant (Whether ready to receive resin for regeneration or under regeneration etc) shall be available in the Control System of CPP.
6.03.07	Demineralized water shall be used through out the regeneration process for backwashing, diluting the regenerant, rinsing and resin transfer.
6.03.08	A conical bottom hopper having a water ejector will be used for resin make-up.
6.03.09	At any time only one of the sequence shall be in progress.
6.04.00	**Interlocks** a) All interlocks for safe operation of the plant shall be provided. They shall specifically include the following as minimum requirement. b) Service vessels can be back in service, only after they have been pressurized. c) Service vessels can be taken up for resin transfer only after they have been completely isolated from the condensate system and depressurized. d) Resin can be transferred to and from only one service vessel at a time. e) Resin transfer between the service and the regeneration skids shall be permitted only when the receiving vessel is initially empty. f) Regeneration sequence can commence, only when the level in the waste neutralisation pit is low enough to receive the entire waste quantity of waste water from the regeneration operation. g) Wherever possible, completion of all timed steps in the regeneration and resin transfer process shall be physically verified by effluent conductivity etc, as applicable. The automatic sequence shall be prevented from advancing to next step, till these required

CLAUSE NO.	TECHNICAL REQUIREMENTS

physical conditions are achieved, and at the same time this delay shall be annunciated in the control panel, to draw the attention of the operator. The automatic sequence of operations shall be interruptive at any time by the operator and he shall be able to take over the control to manual from that step onwards. Further operator should be able to over ride sequence, if required. It shall be possible for the operator to extend the timing of a particular step by isolating the timer for the duration. The timer will restart once the operator puts back the system on 'auto' and the other steps will then follow as programmed.

h) The regeneration sequence shall be prevented from advancing further in the event of tripping of a running motor or other fault condition, which do not permit the various desired parameter of this step to be achieved. A manual override for this shall also be provided.

i) Annunciation logic shall be carefully designed so that the alarms are activated only under abnormal conditions. As for example, low flow of diluent water is only relevant when the chemical dosing is in progress. All other times, when no diluent water flow is required, this annunciation should be blocked. In general, Normal and trouble free operation of the plant shall not activate any of these alarms.

j) Adequate diluent water flow shall be established before starting of the ejectors/ dosing pumps for acid and alkali.

k) The immersion heater in the hot water tank can be put on only when there is adequate water level in the tank.

7.00.00 **PAINTING**

7.01.00 Painting shall conform to the requirements specified in the chapter titled "Surface Preparation & Painting"

POWER CYCLE PIPING

KHURJA SUPER THERMAL POWER PROJECT (2X660 MW) TURBINE GENERATOR AND ASSOCIATED PACKAGES BID DOC. NO.: THDC/RKSH/CC-9915-371	SEPARATOR

CLAUSE NO.	SCOPE OF SUPPLY & SERVICES

1.00.00 POWER CYCLE PIPING

1.01.00 Scope of supply and works for Power Cycle piping system shall include the piping systems as listed below.

(a.) Auxiliary steam piping from auxiliary steam header up to user point.

(b)

(i) Main steam lead piping from MS strainers or HPT stop valves (in case MS strainers are integral to HPT stop valves) to HP turbine steam inlet nozzles and any other piping including interconnection of HPT stop valves (if applicable) downstream of terminal point going to turbine.

(ii) HRH steam lead piping from HRH strainers or IPT stop valves (in case HRH strainers are integral to IPT stop valves) to IP turbine steam inlet nozzles and any other piping including interconnection of IPT stop valves (if applicable) downstream of terminal point going to turbine.

(iii) Complete piping system associated with over load valve. (if applicable)

(iv) LP Bypass piping from LP Bypass valves to condenser steam inlet nozzles.

(c.) All extraction steam piping

(d.) Complete Feed water piping including booster pumps suction, boiler feed pump suction & discharge piping up to terminal point, re-circulation, BFP warm up (if applicable) and leak off.

(e.) BFP drive turbines exhaust piping to condenser.

(f.) Spray piping system for the following, as per the scope indicated in tender drawings:

(1.) Reheater attemperation

(2.) HP Bypass and LP Bypass system

(g.) Condensate piping system

(h.) Heater drains and vents piping system

(i.) Steam drains from piping / equipment(s) in the scope of bidder to flash Tank(s) / flash tank manifold(s) as per the scope indicated in the tender drawings.

(j.) Flash tanks including drain and vent piping.

(k.) Valve gland sealing piping system

CLAUSE NO.	SCOPE OF SUPPLY & SERVICES
	(l.) Miscellaneous line drains and vents. (m.) Complete safety valve exhaust piping for SVs / SRVs on piping/equipment in Bidder's scope. (n.) HP Bypass warm-up line (o.) LP Bypass warm-up line (p.) Complete chemical cleaning piping system (Temporary). (q.) Complete steam blowing piping system (Temporary) (r.) Any other piping system required to make the power cycle piping, in the bidder's scope, complete.
1.02.00	The scope for the complete power cycle piping systems mentioned above shall also include :
1.02.01	Design, manufacture, fabrication, supply, erection, testing and commissioning of complete piping /fittings / accessories, valves and specialties, strainers, expansion joints, restraints, hangers/ snubbers / shock absorbers/ supports with all components & attachments, thermal insulation etc. for the above piping systems in bidder's scope.
1.02.02	All auxiliary steel structures (including structures in C-D Bay etc.) required for providing proper supporting arrangement for the piping systems in bidder's scope.
1.02.03	Complete design and engineering including but not limited to pipe sizing, flexibility analysis, hanger support engineering, engineering of thermal insulation etc. and other engineering of items as per scope of supply and these shall be submitted to Employer for further review and approval.
1.02.04	Steam blowing of piping systems, as specified elsewhere in the technical specification, after complete erection is to be carried out, which includes supply, erection and dismantling of temporary piping, pipe spools, supports, valves, fittings, blanking plates, blow tools etc.
1.02.05	Chemical cleaning of piping systems, as specified elsewhere in the technical specification, after complete erection is to be carried out, which also includes complete supply, erection and dismantling of temporary piping, valves and fittings etc.
1.02.06	In case the steam to the turbine enters from the top casing, flange(s) shall be provided for the piping connected to the steam inlet nozzle on turbine top casing. This is to facilitate dismantling of turbine top casing during maintenance without cutting the pipe.
1.02.07	Providing other necessary services for making the piping systems in bidder's scope complete.

1.02.08 Painting of piping system in accordance with the stipulations laid down elsewhere in this specification

1.02.09 It is also the responsibility of the TG package contractor/equipment supplier to transport from store to erection location at site and to provide all necessary assistance including supply & providing temporary supporting arrangements/platforms etc. and to keep the loose supply valves/equipments in TG scope (i.e. HP stop valve & control valves, IP stop & control valves, Non-Return valves on CRH line & HP & LP Bypass valves etc.) as applicable, in fitment position between pipe ends ready for welding and / or flanging to complete erection of applicable piping systems.

1.02.10 All supplies, works, services shall comply with the detailed scope given in the subsequent clauses of this Sub-section.

2.00.00 SCOPE OF SUPPLY

2.01.00 Pipes and fittings

(a.) Piping, fittings, stubs, plugs, flanges, caps, steam traps, break-down orifice, drip pan and other accessories for the piping systems identified above and as per approved schemes. All flanges shall be of weld neck type.

(b.) Matching pieces/ Tubular Transition Pieces/ Sleeves:

(i) The TG contractor shall also supply under their scope necessary material matching pieces/sleeves, shop welded to equipment/valve (in TG package scope of supply) nozzles mentioned at (ii) below, in case material of nozzles for these equipment/valve etc. is dissimilar to the connecting pipe material (SG package scope) at SG/TG interface point.

(ii) Equipment/valve: (a) HPT stop valves or MS strainers inlet (as applicable) (b) IPT stop valves/CRV or HRH strainers inlet (as applicable) (c) HP Turbine exhaust steam nozzles (d) CRH NRVs (e) HP & LP Bypass valves (f) orifice assemblies (if applicable).

(iii) In the event of (i) above, the open end of the material matching piece/sleeve shall be provided with necessary edge preparation matching the connecting pipe/dimensional matching piece (SG scope) edge details, which will be furnished to the TG contractor during detail engineering. The material matching piece/sleeve shall be shop welded to the respective equipment nozzles/ valves before transporting it to site so that dissimilar material field welding at SG/TG terminal points (i.e. between TG equipment nozzles/valves and connecting pipe/dimensional matching piece (SG scope)) can be avoided.

(iv) All matching pieces that are required for feed water discharge piping and RH attemperation piping connection at Terminal Points with employer/others to match diameter, thickness & material shall be in the scope of TG package

CLAUSE NO.	SCOPE OF SUPPLY & SERVICES

contractor. However if TG contractor offers SA106 GrC material in feed water discharge piping / reheater Attemperation piping and SG contractor offers 15NiCuMoNb5/ASTM A335 Grade P36 material for feed water discharge piping / reheater Attemperation piping in their scope, then matching piece required for connection of these piping at SG/TG terminal point to match the diameter, thickness & material shall be in scope of SG contractor.

(v) In all other cases, the TG Contractor shall supply all standard and non-standard matching pieces (both dimensional as well as material matching pieces) as may be needed for the piping systems (in contractor's scope) and for connection of these piping systems at equipment/ valves/ specialties/ terminal points, unless specifically excluded.

(c.) Pipe stubs for mounting thermo wells and other instrumentation, including for the instruments supplied by others, along with necessary root valves, reducers / matching pieces and instrument tubing

(d.) Thermal insulation and cladding along with all necessary accessories for all piping systems, equipment , tanks etc. in bidders scope

(e.) The contractor shall also design and provide for additional guides/ stops/restraints etc. along with auxiliary steel for control of pipe line vibration within allowable/ acceptable limits

(f.) Weather hood for pipes crossing ceilings and walls.

2.02.00 Valves and Specialties

Valves, actuators and specialties including expansion joints, orifice plate assemblies, steam traps, strainers, instrument root valves, etc. for the systems specified

The Contractor shall also supply special accessories like floor stands, chain operator, extended spindle etc. as required. Valve, especially for which approach from existing floors are not possible for O&M, bidder shall provide appropriate platforms with the access ladders for the same.

2.03.00 Hangers and Supports

2.03.01 All pipe supporting elements such as constant load spring hangers, variable spring hangers, supports, guides, restraints, stops, etc. and all associated auxiliary steel and hardware such as beams, channels, insert plates section attachments to pipe supports, pipe and beam clamps, straps, slings, stools, shoes, saddles, devices, rods, turn buckles, graphite /steel plate / Teflon sheet etc. for all the systems specified.

2.03.02 Any special supports/supporting arrangement including supporting structures required for HP stop valve, HP control valve, IP stop valve, IP control valve (other than the supports normally provided on MS piping and HRH piping in SG vendor

scope) and HP/LP Bypass valve as per the standard practice/recommendations of the TG equipment supplier/respective valve supplier, the same shall be supplied by TG contractor.

2.04.00 Miscellaneous Erection ,Testing and cleaning Materials

(a.) All erection material such as bolts, nuts, washers, gaskets, electrodes, filler materials, welding gas, consumable inserts and backing rings, accessories and miscellaneous specialties, including specialty high strength anchor bolts for fixing equipment / insert plates on concrete structures etc. required for the proper installation of piping systems.

(b.) All temporary piping, supports, valves, blanking plates, caps, pumps, pressure gauges, plugs, gaskets, bolts & nuts, spools, tools & tackles, special devices (as applicable) for stop valves/control valves and other accessories required to complete the Hydrostatic testing of piping systems in bidder's scope .

(c.) The bidder's scope shall also include supply of necessary blanks, blanking inserts, hydraulic test tool kit or other special devices and accessories (as applicable) for the Stop valves/ control valves/OLV supplied by the TG package contractor and connected to/ installed on SG Package contractor's scope of piping (i.e. MS,HRH, CRH, HP&LP Bypass) for carrying out hydrostatic testing of these piping systems with the Stop valves/control valves in circuit, as per the scheme/procedure for hydrostatic testing approved by employer.

(d.) All temporary piping, supports, valves, blanking plates, blanking inserts, caps, pressure gauges, thermo wells/ temperature measuring instruments, plugs, gaskets, bolts & nuts, tools & tackles, spool pieces for valves/control valves/ flow nozzles & specialties etc., tanks and other accessories as required to complete chemical cleaning & Steam Blowing operation of piping systems in bidder's scope as specified elsewhere in the technical specification.

(e) Blow out tools, blow through tools, temporary valve heads/valve blow down cover plate/ flanges, blanking inserts, strainers, gaskets, bolts & nuts, special tools & tackles, etc. as required for HPT stop & control valves, IPT stop & control valves, CRH NRVs & HP & LP By Pass valves & overload valve as per the scheme & procedure prepared by SG contractor and approved by employer during detailed engineering stage for the steam blowing operation (SG scope) of MS,HRH,CRH,HP&LP By Pass piping systems.

3.00.00 SCOPE OF SERVICES

3.01.00 Complete design, engineering, etc. for the power cycle piping systems and other piping systems included in this specification shall be the responsibility of the Contractor. Employer's responsibility/ function in this connection shall be limited to review and approval of Bidder's design/ calculation, engineering, drawings, and documents. Bidder's scope of services for complete engineering of the power cycle piping systems shall include but not be limited to the following :

CLAUSE NO.	SCOPE OF SUPPLY & SERVICES

(a.) Preparation of engineering piping diagrams indicating flow schematic, flow parameters, pipe sizes, line designations and tag nos. of various components etc. and submission of same to Employer for review and approval.

(b.) Preparation of Design philosophy & Design parameter selection, flash tank sizing calculation, System-wise or P&ID wise pipe schedule, valve schedule, insulation schedule, painting schedule, hanger schedule for the systems included in the bidder's scope and submission of same to Employer for review and approval. It is to be ensured by Bidder to attach all schedules in "excel" format along with respective schedules in "pdf" format documents for review and approval.

(c.) Preparation of preliminary as well as final composite piping layout drawings and isometric drawings of pipe size 65 NB & above and submission of same to Employer for review and approval.

(d.) Preparation of erection isometric & fabrication (with material take off) drawings for shop fabricated piping which are of size 65 mm NB and above to the Employer for review and approval.

(e.) Preparation of layout drawings & isometric drawings for site routed piping (i.e for pipe sizes below 65NB) and submission of the same to the Employer for records.

(f.) Preparation of System wise stress analysis report (including input) along with stress isometric drg./sketch marked with node points for review & information

(g.) "AS BUILT" drawing of the piping layout, fabrication isometrics drawings & Hanger / support GA Drawings shall also be prepared by the Contractor based on any layout modifications made at site and submitted to Employer for records.

(h.) All shop tests as required by the applicable codes, ASME/ANSI Standards, IBR and other standards enumerated or specified.

3.02.00 Approval from Statutory Authorities

(1.) The Contractor shall identify and satisfy all statutory code requirements as may be required for the piping systems covered in this specification. It is the sole responsibility of the contractor to identify and obtain all necessary approvals from various Government agencies/board/statutory authorities/IBR etc., as applicable for the material, design, manufacture, Fabrication, erection and testing (both Shop test and site test as applicable) of pipes, valves, fittings, specialties etc.

(2.) The contractor shall also identify and obtain all necessary approvals from the IBR authority in the state where the plant is being installed, for the erection/ testing/ commissioning/ registration and any other requirement as required by IBR. The contractor shall be responsible for obtaining

CLAUSE NO.	SCOPE OF SUPPLY & SERVICES	
	approval from Chief Inspector of Boiler as per Indian Boiler Regulations (IBR). This shall include furnishing all necessary certificates for design, manufacture and testing for pipe, valves, fittings, specialties, certificate of manufacture and test for each erected piping in the relevant formats to the Chief Inspector of Boilers, obtaining his approval and furnishing the same to the Employer. (3.) In order to obtain the above approvals, all necessary documentation, fees etc. required shall be arranged and furnished by the Contractor to the statutory authorities.	
3.03.00	In case any localized modifications/re-routing/re-erection etc. are required for the piping systems (in contractor's scope) & its supporting arrangement even after approval of drawings/during erection, then the same shall be carried out by the contractor under his scope of supply & services in consultation with employer. Obtaining IBR approvals, if any required, for the modification work shall also be in the scope of the contractor.	
3.04.00	The Contractor shall design in detail all piping supports including restraints, guides, stops etc., after deciding the final location of hangers and supports and based on final stress analysis and hanger/ support load data originated by him. Bidder shall submit to Employer for review his hanger design documents in the form of hanger GA drawings and hanger schedule including adjoining aux steel structure.	
3.05.00	The Contractor shall furnish separate sketches for each hanger/ support, restraint, anchor, etc. These sketches shall include the location with reference to column co-ordinates, identification number, bills of material, design loads, operating load, spring stiffness, amount of spring pre-compression etc., the method of attachment to the pipe and steel structure, identification of beams/structure (from which support is taken) etc. Additionally the sketches shall show a key plan referenced to plant north and center line elevation of the pipe at the point of attachment for cold and hot conditions.	
3.06.00	In order to ensure that all supporting elements, anchor and restraints have been installed and adjusted in accordance with design documentation, the Contractor shall inspect and log the hanger readings for the hangers associated with the power cycle piping system as follows: (a.) After hydrostatic test with the piping in the cold position, with all travel stops removed, with the pipe completely insulated and in all respect ready for startup. (b.) After steam blowing, in case steam blowing is applicable for the line. (c.) Piping in hot position, with the unit operating at rated parameters (d.) Piping in hot position (rated parameter condition) after six (6) months of operation	

CLAUSE NO.	SCOPE OF SUPPLY & SERVICES
	(e.) Piping in cold position during the first complete shutdown after at least six (6) months of operation.
3.07.00	At the time of each inspection as mentioned at 3.06.00 above, the Contractor will determine the necessity for revision, adjustment or replacement of pipe supporting elements, restraints and anchors. Any changes proposed shall be subject to the concurrence of the Employer. The changes shall be incorporated by the Bidder after Employer's concurrence. A written record shall be furnished to the Employer.
3.08.00	Design and engineering of all temporary piping systems that are required for the pre-commissioning/commissioning activities of power cycle piping system in TG contractor's scope, unless specifically excluded.
3.09.00	Certified copies of test reports for all tests and examinations specified in the specification and for the mandatory test and analysis required by ASME/ ASTM material specification, for the materials used for piping, shall be furnished to Employer.
3.10.00	Drawings, data and design calculations as specified in this Sub-section and elsewhere in the specification shall be furnished by the Contractor to the Employer for review.
3.11.00	Cleaning including chemical cleaning of all systems as specified herein and installation of temporary pipe work for the same.
3.12.00	Providing temporary closures as required on piping system for performing hydrostatic test of all piping systems in contractor's scope.
3.13.00	Steam blowing of all piping systems as specified elsewhere in the technical specifications including temporary pipe work, providing temporary closures on piping systems etc. as required.
3.14.00	Making interface connections (i.e. edge preparation, welding, pre & post welding heat treatment, stress relieving of the weld joint etc.) , as applicable, for the piping systems in TG package contractor's scope (including Feed water discharge & RH spray piping) at Terminal points with valves/equipment/Piping etc. supplied by employer/others. However, in such case where dissimilar material (A106 Gr.C Vs 15NiCuMoNb5/A335 Grade P36) welding is to be made at terminal points of feed water discharge/ reheater attemperation piping with others/employer, then making the dissimilar material interface jointing/connection shall be in the scope of the package contractor using 15NiCuMoNb5/ASTM A335 Grade P36.
3.15.00	TG contractor shall provide necessary works/services, wherever applicable, for assembling & dismantling of HPT stop & control valves, IPT stop & control valves, CRH NRV's, HP & LP Bypass valves and OLV etc.

CLAUSE NO.	SCOPE OF SUPPLY & SERVICES
3.16.00	Installation/mounting of pipe mounted items, supplied by employer/others, on the piping system in bidder's scope.
3.17.00	Performing all tests and implementing all quality control procedures as specified herein including provision of testing equipment, stress relieving equipment, radiography equipment and any other equipment necessary to meet the requirements of the specification.
3.18.00	Apart from carrying out chemical cleaning, the work shall include disposal of water, clean up, reinstatement of the cleaned piping system, dismantling and removal all temporary piping, equipment and materials from site.
3.19.00	Providing complete interface engineering with the suppliers of other equipment & piping with which the piping systems in contractor's scope is to be connected or have interface in any other way.
3.20.00	**Stress Analysis** The Contractor shall carryout stress analysis of piping system and submits for Employer's approval with following inputs. (a.) A write-up on the stress analysis including codes used and design conditions considered. (b.) A copy of the computer printout for input data for the various design conditions considered for stress analysis along with the stress diagram (piping isometric marked with node points marked.) (c.) Analysis results in tabular form giving calculated and allowable reactions/forces/moments on equipment nozzles/terminals for the various design conditions considered for analysis. (d.) Allowable and calculated code stresses at various node points in the piping for the design conditions considered based on code requirements for analysis. (e.) Analysis results giving calculated forces and moments and movements at various hanger/support/restraint/anchor points from the static analysis corresponding to various thermal / operating conditions, sustained load case, hydro load case (other than water lines) and occasional loads ,as applicable, for each piping system analyzed. (f.) For performing stress analysis & dynamic analysis of MS, HRH, CRH, HP & LP Bypass piping systems by SG contractor, all required inputs (including isometric drawings. for the part of these piping systems in TG bidder's scope, relevant GA drawings, valve opening closing time, weight of valves, allowable forces & moments, cold to hot movements etc.) shall be furnished by TG package contractor during detail engineering as per mutually agreed schedule.

CLAUSE NO.	SCOPE OF SUPPLY & SERVICES

(g.) TG package contractor shall provide an anchor on the feed water discharge piping (in TG scope) near the terminal point (between TG & SG scope of Feed water dis-charge piping). The anchor shall be provided taking support from C row columns on either side of Condenser Centre line. TG vendor shall perform the Stress Analysis for complete feed water piping in TG scope up to the terminal point/anchor point (under TG scope). The TG contractor shall design the anchor considering the forces & moments for the Feed water discharge piping imposed from either side of the anchor (i.e. from feed water piping under TG scope as well as that under SG scope). The values of forces & moments from SG scope of feed water discharge piping shall be furnished by SG contractor to TG contractor during detail engineering, after the terminal point/anchor point exact location is finalized by TG contractor.

(h.) TG package contractor shall provide an anchor on the Reheater spray piping (in TG scope) near the terminal point (between TG & SG scope of Reheater spray piping). The anchor shall be provided taking support from C row columns on either side of Condenser Centre line. TG vendor shall perform the Stress Analysis for complete Reheater spray piping in TG scope up to the terminal point/anchor point (under TG scope). The TG contractor shall design the anchor considering the forces & moments for the Reheater spray piping imposed from either side of the anchor (i.e. from Reheater spray under TG scope as well as that under SG scope). The values of forces & moments from SG scope of Reheater spray piping shall be furnished by SG contractor to TG contractor during detail engineering, after the terminal point/anchor point exact location is finalized by TG contractor.

CLAUSE NO. | TECHNICAL REQUIREMENTS

Power cycle Piping

1.00.00 EQUIPMENT SIZING CRITERIA

1.01.00 **General**

(a.) All the piping systems and equipment supplied shall be designed to operate without replacement and with normal maintenance for a plant life of not less than twenty five (25) years and shall withstand the operating parameter fluctuations and cycling which can be normally expected during this period.

(b.) The design, Engineering, fabrication, erection, testing & commissioning etc. of the complete piping systems shall be to the requirements of power piping code ASME B 31.1 (latest edition). In addition to this, requirements as laid down in Indian Boiler Regulations (latest edition) shall also be met completely for piping systems under the purview of IBR.

1.02.00 **Pipe Sizing**

(a.) Inside diameters of piping shall first be calculated for the flow requirement of various systems. The velocity limits for calculating the inside diameters are listed below.

Main steam piping	76 M/sec
Hot reheat piping	76 M/sec
LP bypass downstream	100 M/sec
Feed Water Suction (up to BFP suction)	2.0-3.5 M/sec
Boiler Feed water pump Discharge	4.0-6.0 M/sec.
Extraction steam (Super heated)	60 M/sec
Extraction steam (saturated)	30 M/sec
Condensate suction	1.5 M/sec
Condensate discharge	3.0-5.0 M/sec
Auxiliary steam	60 M/sec
BFP-T Exhaust Piping	60- 120 m /sec
Other piping	As per good engg. Practice

(b.) Inside diameters thus calculated for various piping systems shall be checked for the allowable pressure drop as per the HBDs.

(c.) Design parameters shall be selected based on the provisions of latest editions of ASME B31.1 and IBR 1950. Pipe shall be sized for the worst (i.e. maximum flow, temperature and pressure values) operating conditions for each system considering the maximum occasional pressure and temperature variations expected in each system during its service. In case of BFP suction sizing, “transient analysis” shall be carried out for optimum sizing of the system in order to establish the pipe inside diameter for minimum pressure drop in system to match with the pump NPSH requirement under worst operating conditions. Further, notwithstanding anything contained in these codes, standard & regulations, following specific requirements shall also be met.

(d.) The design pressure for BFP discharge piping up to and including first isolation valve downstream of feed water regulating station (FRS) shall be selected such that the minimum calculated thickness for various pipes at design temperature is sufficient for the following conditions, considering allowable stresses as per ASME B31.1.

(i) Discharge Pressure corresponding to Turbine driven BFP trip speed at shut off head flow condition, If TDBFP characteristics is governing for calculation of boiler feed discharge piping design pressure.

(ii) Discharge pressure corresponding to Motor driven BFP trip speed (frequency 51.5Hz) at shut off head flow condition If MDBFP characteristics is governing for calculation of boiler feed discharge piping design pressure.

(e.) The design pressure of complete feed water discharge piping system downstream FRS first isolation valve shall not be less than maximum of the following:

(i) 1.05 times the maximum operating pressure (including BMCR condition) at BFP discharge.

(ii) Pressure required at BFP discharge under lowest spring loaded safety valve on boiler separator blowing condition.

(iii) Design pressure as required by IBR / ASME.

1.03.00 **Material Selection**

Piping system shall be of carbon steel for design temperature up to 400 deg. C and alloy steel for design temperature above 400 deg. C.

1.04.00 **Pipe Wall Thickness**

1. Thickness calculation shall be made on the basis of procedure and formula given in ANSI/ASME B 31.1. Thickness thus calculated shall then be checked based on the procedure and formula given in IBR. Then, based on the higher value of the two calculations (after adding manufacturing tolerance), the next heavier commercial wall thickness shall then be selected from thickness schedules (eg. sch.40, sch.80, etc.) as contained in ASME B36.10 for OD controlled pipes and from manufacturer's schedules for ID controlled pipes.

   However, in such cases where the calculated thickness for OD controlled pipe falls beyond the thickness corresponding to the listed schedule nos. as given in ANSI B36.10 for the pipe size, both ID and OD controlled pipes to manufacturer's schedules are acceptable.

2. OD controlled pipes shall be to the dimensional standards ANSI B36.10 for carbon & alloy steels pipes and ANSI B36.19 for stainless steel pipes.

3. To account for losses due to corrosion, erosion etc. during the plant service life, an allowance of 1.6 mm/0.75mm shall be considered in the minimum wall thickness calculation of pipes as per ASME B31.1/IBR respectively.

4. The design pressure and temperature, down-stream of any pressure reducing valve up to and including the first block valve shall be the same as that at up-stream of pressure reducing valve.

5. The piping at Downstream of de-super heater, for the spray mixing length, shall be of alloy steel material. The minimum straight length of piping to be considered at downstream of de-super heater for spray mixing shall not be less than the length required for proper mixing & evaporation of spray water as recommended by respective de-super heater manufacture. First bend downstream of any de-super heater shall be provided only after de-super heater manufacturer's recommended minimum required straight pipe length for proper mixing of spray water with steam.

6. The selected piping for the spray mixing length at downstream of desuperheater / LP Bypass valves shall be checked (as per Clause 102.2.4 of ASME B 31.1) to meet the design requirement corresponding to the temperature derived from the equivalent enthalpy method between upstream and downstream of the de-super heater valves.

7. Complete boiler feed pump recirculation piping up-to last block valve (downstream of re-circulation control valve) shall be designed for full pump shut-off head. However, if IBR/ASME calls for any provision of safety valve at the downstream of last isolation valve on recirculation piping, then the same shall be provided by bidder.

8. However, in no case, the selected pipe thickness shall be less than (a) Sch XS for LP Bypass downstream piping (b) Sch.80 for alloy steel & carbon steel pipes of sizes 50 NB & below and (c) Sch. 40S of ANSI B 36.19 for Stainless steel piping. Further, for the piping systems likely to be subjected to two phase flow, i.e. downstream of control valves on heater drain lines etc., the selected thickness shall not be less than the Sch XS or one schedule higher than the calculated thickness, whichever is higher.

1.05.00 **Layout**

(a.) All high points in piping system shall be provided with vents. All low points shall be provided with drains. Provisions of drains on steam piping shall be as per ASME code TDP-1. Drain lines shall be adequately sized so as to clear condensate in the line and prevent water hammer and damage to turbine due to water induction. However, in no case the min. ID of drain pipe selected shall be less than 19mm. All piping shall be sloped towards the system low point such that slope is maintained in both hot and cold condition.

(b.) All drain, vent, air release, sampling and instrument root lines in piping system with design pressure 40 Kg/cm2 (g) and above or with temperature above 350 deg.C or with vacuum service shall be provided with two (2) valves in series (i.e. double valved).

(c.) The pipe routing shall be such that clear headroom of not less than 2.1 meters above the walkways/working area is available. The contractor shall ensure correct orientation of and easy access to valves and instruments etc. and sufficient clearance for removal and maintenance of the same. The piping shall not encroach on withdrawal space of various equipment and walking space.

(d.) Wherever there is possibility of ingress of rainwater through floor/ceiling opening at points where any pipe passes through floor/ceiling suitable weather protection hood shall be provided.

1.06.00 **Stress Analysis**

(a.) Flexibility and stress analysis for various piping systems shall be carried out by the contractor as per the requirement of ASME B31.1. Analysis results shall satisfy the following.

(1.) Calculated stresses in the piping system shall be within the allowable limits stipulated in ASME B 31.1 as well as in IBR for piping under the purview of IBR.

(2.) Calculated forces and moments on equipment nozzles/TP are not more than the allowable loading provided by respective equipment manufacturer(s)/contractors. Flexibility analysis also calculates the deflections in all directions (translational and rotational) to enable design and selection of hanger/support system.

(b.) Cold pulling is not permitted. The contractor shall so design the piping systems that there will be no requirement of cold pull for meeting allowable reaction/stress values.

1.07.00 **Hangers and Supports**

All hangers and supports shall be erected such that vertical angulation in hot condition (rated parameters) shall not exceed the limits as specified in MSSP-58. However, in piping system connected to the rotating equipment nozzles, it may be required to design and erect the hangers/supports in the piping near the equipment nozzle as per the requirements/recommendations, if any, of rotating equipment manufacturer(s).

1.08.00 **Thermal insulation**

(a.) Thermal insulation shall be provided mainly for the following reasons.

(1.) Conservation of heat and maintenance of temperature as per design cycle.

(2.) Personnel protection.

(b.) Design for personnel protection

For the piping and the equipment with surface operating temperature of 60 deg. C and above, the personnel protection insulation shall be applied such that the temperature of protective cladding shall not exceed 60 deg. C

(c.) For First Layer, Ceramic Fiber insulation is to be used in following circumstances :

Operating Temperature	Insulation material selection
500 deg. C and above	75 mm Ceramic fiber followed by LBM

(d.) The Contractor shall prepare an insulation thickness schedule covering both the cases of heat conservation and personnel protection based on the following design data.

Design ambient temperature	40 deg. C for inside and 45 deg. C for outside the Main plant building.
Maximum cladding temperature	60 deg. C
Wind speed	0.5m/sec. for inside and 0.25m/sec for outside the Main plant building
Emissivity of cladding	0.2
Pipe/Equipment wall temp.	Maximum operating temperature.
Thickness calculation	As per ASTM C-680 or equivalent

Note : Thickness of Ceramic fiber and LBM is to be calculated layer wise considering first layer of ceramic fiber insulation thickness as per clause 1.08.00 (c) followed by mineral wool/LBM of appropriate thickness to reach cladding surface temperature 60 deg. C or less)

1.09.00 **Flash Tanks**

(a.) The flash tanks shall be adequately sized to take care of the total drains in the complete power cycle piping system. There shall be sufficient margin to accommodate the possible variation in drain quantities as well as flash steam. Flash tanks shall be designed as per the requirement of ASME Boiler and Pressure Vessels (B&PV) codes, & ANSI standard. The contractor shall submit design calculation for flash tanks and basis of design parameter selection for Employer's review.

(b.) However the minimum design pressure and temperature for the flash tanks shall be 3.5 Kg/cm2 (g) and 210 deg. C respectively. Flash tanks shall also be designed for full vacuum condition.

(c.) Corrosion allowance of 3.0 mm shall be added to the design thickness of the shell and head of the vessels. The minimum thickness of the vessels including corrosion allowance shall not be less than 8 mm.

(d.) The flash tanks and manifolds shall be designed to take care of the impact forces due to incoming drains and possible erosion that may arising out of flashing.

(e.) In case the spray is in manifold, the material for the flash tank manifolds shall conform to ASTM A335 Gr. P22 or better and its thickness shall not be less than SCH 100 of ANSI B36.10 irrespective of temperature of the fluid handled

(f.) The temperature in the flash tanks shall be maintained by using condensate/Feed water spray, as the case may be and in whichever case applicable. The spray shall be automatically controlled. However, for flash tanks open to atmosphere continuous spray through an orifice shall also be acceptable.

2.00.00 SPECIFIC REQUIREMENTS : PIPES AND FITTINGS

2.01.00 Manufacturing tolerances on pipe diameter (for both ID and OD controlled pipes) and thickness shall be as per ASTM A-530/ A999M, as applicable.

2.02.00 Bend thinning allowance shall be provided for all bends as per the recommendations of ASME B 31.1. The finished bends wall thickness at any point of the bend shall not be less than the calculated minimum straight pipe wall thickness.

2.03.00 Steel pipes, fittings & valves shall in general be provided with butt welding ends as per ANSI B 16.25. for sizes 65NB & above and socket welding ends as per ANSI B 16.11 for 50 NB & below. However, butt weld joints in 25 NB / 40 NB / 50 NB piping is also acceptable provided root run (with TIG welding) is followed for the butt joints. However, in certain cases edge preparations on pipe welding end may be required to be done to match equipment terminals, valves, specialties, connection to flanges etc.

2.04.00 All stubs welded to the pipe including welded thermo wells and instrument source tapings shall be installed on the pipe prior to stress relieving.

2.05.00 Instrument tubing up to and including the root valves and all line drains & vents shall be generally of the same pipe material as that of the main pipe on which they are located unless & until specified otherwise elsewhere.

2.06.00 Wherever ASTMA 106 Gr. B/Gr. C or A - 105 material are used the maximum carbon content shall be limited to 0.30% (Max.).

2.07.00 Wherever mitered bends are used the thickness of pipe from which they are fabricated shall conform to the requirements of Regulations 361 (C) of IBR. The angle between axes of adjoining pipe sections shall not exceed 22.5 deg.

2.08.00 Non-destructive examinations for butt welds of NPS over 50 mm and for welded branch connections of branch size over 100 mm NPS shall be as specified elsewhere. For smaller sizes the mandatory minimum requirements shall be as per Table 136.4 of ANSI B 31.1 for non IBR piping and for piping under the purview of IBR, the mandatory minimum requirements shall be as per Regulation 360 of IBR or table 136.4 of ANSI B 31.1, whichever is more stringent.

3.00.00 SPECIFIC REQUIREMENTS : VALVES AND SPECIALITIES

3.01.00 For all globe and check valves, the direction of flow shall be clearly stamped on the body of the valve.

3.02.00 All globe valves shall be capable of being closed against the design pressure.

3.03.00 Where globe valve has been specified for regulation purpose, the disc shall be tapered plug type and suitable for controlling throughout its lift.

3.04.00 All gate and globe valves shall have bonnet-back seating arrangement.

3.05.00 Check valves shall have full floating and accurately guided discs.

3.06.00	All gate, globe and check valves shall be designed for reconditioning seating surfaces and replacement of stem and disc without removing the valve body from the line.
3.07.00	Hand wheels for all the valves shall close the valve in clockwise direction when viewing from the top. All hand wheels shall be clearly marked indicating the direction of opening/closing.
3.08.00	Manual gear operators shall be provided to open/close the valve against the maximum differential pressure across the valve such that the effort required to operate the valve does not exceed 35 kgf.
3.09.00	Valves of 65 mm NB & above with rising stem shall be provided with position indicator/ visual indication either through plastic stem covers or through metallic stem covers. All gate, and globe valves of size 50 mm and below in vacuum service shall have extra deep gland packing without requiring water gland sealing. All gate and globe valves of size 65 mm NB and above in vacuum services shall have adequately deep gland packing and shall be equipped with lantern rings to admit pressurized water for gland sealing.
3.10.00	Where floors and extension spindle arrangements is required for valves, the height of floor stand shall be about one meter from the floor/platform. The floor stand shall be sturdy construction with column, nut plate and hand wheel made of the cast iron conforming to material ASTM-A-126 Grade B. Suitable thrust bearing shall be provided/between the hand wheel and floor stand. The connection of the extension spindle to the valve stem shall be through a flexible coupling and shall be designed to permit valve thermal movements. Necessary nuts, bolts etc. for mounting the floor stand on platform shall be provided.
3.11.00	All valves shall be provided with proper name plates indicating complete information about the valves.
4.00.00	**INTEGRAL BY PASS VALVES**
	(a.) The requirement of integral bypass valves shown in P&IDs, is the minimum required. The final requirement shall be worked out, as per process requirement, during detailed engineering.
	(b.) If integral bypass valve selected is of size 50 mm NB and below, then gate or globe type of forged construction with socket weld end as per ANSI B-16.11 shall be provided. For integral bypass valves of size 65 mm NB and above, both forged and cast steel gate valves with butt weld ends as per ANSI B 16.25 are acceptable.
	(c.) Bypass pipe shall be of seamless construction and thickness corresponding to minimum of schedule 80 and shall be of the same material class as the main pipe.
	(d.) Integral bypass shall be motor operated if main valve is motor operated.
5.00.00	**SPECIFIC REQUIREMENTS: FABRICATION**
5.01.00	Piping system fabrication shall be in accordance with the requirement of ANSI B 31.1. However for system under purview of IBR, the requirements of IBR, shall also be complied with. All dissimilar material piping connections shall be subjected to the acceptance and approval of the Employer. Complete document shall be submitted by the contractor in addition to the fulfillment of IBR requirement.
5.02.00	Where welded pipe and fittings are used the longitudinal weld seams of adjoining sections shall be staggered by 90 deg.
5.03.00	Access holes for radiography at shop for piping requiring 100% radiography shall be provided only if the area to be radio graphed is not accessible from pipe ends. Access holes for field radiography shall be provided.

CLAUSE NO.	TECHNICAL REQUIREMENTS

5.04.00 **Bends and Elbows**

(a.) Elbows shall be generally of long radius type.

(b.) Bends for piping 65 mm NB and above shall be made hot and for piping 50 mm NB and smaller may be made cold.

(c.) Bends shall be made in accordance with PFI-ES-24/ ISO/ Other international standards. Bends shall be supplied with the minimum tangents except where the piping layout necessitates shorter lengths in which case the tangents shall be suitably reduced after the bending operation to suit the requirements of the piping layout. Heat treatment of bends shall be done as per material specification.

(d.) All bends 65 mm NB and larger shall be ultrasonically examined as per PFI-ES-20.

(e.) Where examination of bends indicates that wall thinning has resulted in thickness less than the minimum specified, repair by weld deposition shall be allowed only where the length of the affected area is 150 mm or less as measured along the outside arc of the bend. Repairs in excess of this amount shall not be allowed. All repairs shall be carried out only after approval of the Employer.

(f.) Circumferential butt welds shall not be used in the area of the bend. Longitudinal welds, where bends are formed from welded pipe shall be located on the bend's neutral axis.

5.05.00 Branch connections shall conform to the requirements of ASME B 31.1. All branch connection welds shall be full penetration welds, except as permitted by ASME B31.1/IBR.

5.06.00 All materials that are bent, forged or formed shall be subject to heat treatment after the forming operations as required by the original material specification. For alloy steel materials the preferred heat treatment process is full annealing.

5.07.00 **Cleaning and Protection**

(a.) All fabricated piping shall be cleaned as per relevant SSPC cleaning technique/practice such that both inside and outside surfaces of the piping are free of sand, loosely adhering scale, dirt and other foreign matters.

(b.) After cleaning outside surface shall be coated with enamel or other protective paint. The weld end preparation shall be coated with Deoxyaluminate paint and protected adequately. Use of grease or oil, other than light grade mineral oil is not allowed.

(c.) After descaling, the pipe shall be protected by applying internally with a water-soluble preservative.

(d.) Following cleaning and preservation, the fabricated sections shall be covered, boxed, capped, or others shielded from further contamination or corrosion.

5.08.00 **MARKING**

5.08.01 All piping shall be marked clearly and legibly at the shop with its identifying pipeline description and piece no. as per the appropriate component or spool piece fabrication drawing.

5.08.02 Marking shall be by any method which does not produce sharp discontinuities and the marking does not get erased until the piping is erected. Piping 6 mm and thicker may be marked by stamping using round nose or dot interrupted die stamps with minimum nose radius of 0.8 mm.

5.08.03 Items too small to be marked shall have metal tags securely attached to each bundle or container of such items such that it does not get erased until the item has been erected.

6.00.00 SPECIFIC REQUIREMENTS – ERECTION

CLAUSE NO.	TECHNICAL REQUIREMENTS
6.01.00	Where control valves, flow nozzles, orifices and other piping appurtenances are to be installed, they shall be installed only after steam blowing and chemical cleaning operation. After the completion of the steam blowing/chemical cleaning the contractor shall cut spool pieces of required length and install the components
6.02.00	Field run piping shall be erected only after completion of erection of all other piping system, structures and equipment unless otherwise approved/directed by the Employer.
6.03.00	When 'C' clamps are tack welded to the pipe for the purpose of alignments of a joint, preheating for the tack welding shall be performed if the main joint adjacent to it to be preheated as per the requirements of this specification, otherwise preheating for the tack weld may be omitted. After the joint is completed, all tack welds shall be removed, flushed with the adjacent surface of pipe by chipping and/or grinding. The areas where 'c' clamps were attached shall be subjected to stress relieving as required.
6.04.00	The hydrostatic testing of the piping system shall be done after proper installation of all permanent hangers/supports. Spring hangers shall be locked during hydrostatic test. Prior to steam blowing all hangers which had been locked for the hydrostatic testing shall be unlocked.
6.05.00	The setting and logging of all supports, restraints/limit stop, spring hangers, etc. is the responsibility of the contractor. The initial setting on all hangers and supports and clearance on restraints and limit stops shall correspond to the design cold values. The Contractor shall check all readings after completion of erection of piping system and application of insulation and carry out readjustment as necessary to be in line with the design cold values. After satisfactory setting of all hangers/restraints, hanger readings/clearances shall be logged by the contractor in proper format and a joint protocol be made.
6.06.00	The contractor shall monitor the behavior of all hangers, supports, restraints etc. during the initial stages of plant operation. When the piping system(s) have attained their rated temperature the contractor shall log, hanger readings, snubber deflections, restraints/limits stop clearances, as specified elsewhere.
6.07.00	All gaskets shall be asbestos free material and suitable for the service application.

7.00.00 **SPECIFICATION FOR PIPING AND FITTINGS**

	Alloy Steel	Carbon Steel
A. PIPES		
Material	ASTM A335Gr.P-92 or equivalent (See Note-1 below) ASTM A335 Gr.P-91 ASTM A335 Gr.P22 OR ASTM A335 Gr.P11 *(See Note below)*	ASTM 106 Gr. B / ASTM 106 Gr. C [A 106 Gr. C for BFD design parameters, CRH design parameters and above. Alternate material for BFD design parameters- 15NiCuMoNb5 (EN 1.6368) / ASTM A335 Grade P36 (See Note below)
Construction	Seamless (See Note below)	Seamless (See Note below)
B. Fittings		
a) Material for 65 NB & Above	ASTM A182 Gr. F92 or Equivalent ASTM A234 GR. WP91 ASTM A234GR. WP22 OR ASTM A234GR. WP11 [See Note below]	ASTM A234 Gr. WPB with A 106 Gr. B piping and ASTM A234 Gr. WPC for A106 Gr. C piping And 15NiCuMoNb5 (EN 1.6368) / ASTM A335 Grade P36/ ASTM A234 Gr. WPC for alternate BFD pipe material [See Note below]
b) Material for 50 NB and Below	ASTM A182 Gr. F92 or equivalent ASTM A182 Gr. F91 ASTM A182 Gr. F22 or ASTM A182 Gr. F11	ASTM A105
	See note below	See note below
c) Basic standards	ANSI B16.9, ANSI B16.11 ANSI B 16.25 & ANSI B 16.28	ANSI B16.9, ANSI B16.11 ANSI B 16.25 & ANSI B 16.28
d) Construction	Seamless (Forged for 50 NB & below)	Seamless (Forged for 50 NB & below) See note below
e) Rating/Wall/ Thickness	To match with that of pipe	To match with that of pipe
C. WELDING		
Backing Rings	Not permitted	Not permitted
D.MATERIAL ANALYSIS		

	Alloy Steel	Carbon Steel
Mandatory Requirements and supplementary requirements:	**(a)Mandatory requirements:** All tests, as given in respective material code (other than supplementary requirements), shall be carried out as minimum. This includes the tests wherein it is specified in the respective material code that "the test is to be carried out when specified by the purchaser" or any such indication, in the code. **(b)Optional tests/ Supplementary requirements (Applicable for 15NiCuMoNb5 (EN 1.6368) / ASTM A335 Grade P36) :** **<u>(i) Optional tests for 15NiCuMoNb5 (EN 1.6368)</u>** Product Analysis (Option 3), Wall thickness measurement away from tube end (Option 15), NDT for the detection of transverse imperfection (option 8) and laminar imperfection (option 9) as indicated in EN 10216-2 and tensile test at room temperature to be done per heat as an additional test. **<u>(ii) Supplementary tests</u> for ASTM A335 Grade P36** S1, S2, S3, S4 & S5 as indicated in ASTM A335. **(c) Supplementary tests & Additional Requirements applicable for ASTM-A-335-P-92 or Equivalent:** **For ASTM A335 Grade P 92:** 1. Supplementary tests S1, S2, S3 and S4 as per ASTM A 335 will be done. However quantum of tests shall be at least 5% of the pipes per heat or Minimum 2 pipes per heat from one end / both end of the pipe as specified in ASTM A335. 2. Supplementary requirement S5: Certificate of conformity "COC" from pipe supplier for microstructure and delta ferrite (to be maintained within 3%max. when measured as per VD TUV 1272). 3. Chemical Composition: For ASTM A335 P92 Nickel and Copper shall be limited to Ni – 0.3% max. and Cu – 0.25% max., respectively, while complying the percentage of other elements in P-92 within the prescribed limits as indicated in the applicable codes/standards for piping (pipes/fittings/components/valves etc.). **For material equivalent to ASTM A335 Grade P 92 :** 1. All supplementary tests as per the applicable material standard /code 2. Certificate of conformity "COC" from pipe supplier for microstructure and delta ferrite (to be maintained within 3%max. when measured as per VD TUV 1272). 3. Additional tests (not covered above), if any, required as per IBR/ ASME.	

E. HYDROSTATIC TEST PRESSURE

(1) Piping system under IBR purview:

At Shop	All piping including fabricated piping shall be hydro tested at 1.5 times the design pressure subject to regulation 374 of IBR. However, non-destructive testing in lieu of hydro test is also acceptable subject to regulation 343 (3) of IBR
After Erection	All piping systems shall be hydro tested at 1.5 times the design pressure subject to regulation of 374 IBR. However, for such systems where it is practically not possible to do hydro tests, the tests as called for in ANSI B31.1& IBR in lieu of hydro test shall also be acceptable.

Hydro Test of Boiler Feed Piping: Since, isolating valve is not provided at economizer inlet/ terminal point, contractor is to make all necessary arrangement of Hydro-Testing of BFD piping

beyond HP heater downstream isolating valves up to TP either by blanking or providing a temporary valve. NDT as per the provision of IBR & ASME B31.1 can be carried out for the joint at TP between SG & TG contractor.

(2) Non-IBR Piping Systems:-

At Shop	All piping including fabricated piping shall be hydro tested at 1.5 times the design pressure subject to regulation 374 of IBR. However, non-destructive testing in lieu of hydro test is also acceptable subject to regulation 343 (3) of IBR
After Erection	All piping systems shall be hydro tested at 1.5 times the design pressure subject to regulation of 374 IBR. However, for such systems where it is practically not possible to do hydro tests, the tests as called for in ANSI B31.1& IBR in lieu of hydro test shall also be acceptable.

Notes:

1. a) The materials used for main steam / hot reheat and other alloy steel piping systems shall be equal to or better than the following specified materials unless indicated otherwise

	Max. Permissible Design Temperatures limits for various alloy steel piping materials are:	**Material**
i)	Upto & including 510 degree Celsius	Alloy steel ASTM A-335 Gr.P-11.
ii)	Upto & including 545 degree Celsius	Alloy steel ASTM A -335 Gr.P-22.
iii)	Upto & including 601 degree Celsius.* **Consequent to above design temperature limitation of 601 Deg.C for usage of ASTM-A-335-P-91 or its equivalent material, this material (i.e. ASTM-A-335-P91 or its equivalent) shall not be used or offered in Main Steam and / or Hot Reheat Piping System when rated steam temperature at turbine inlet as offered by the Bidder exceeds 593 deg.C for either mainsteam or Hot reheat piping or for both)*	Alloy steel ASTM A -335 Gr.P-91 or equivalent.
iv)	Upto & including 610 degree Celsius.	Alloy steel ASTM A 335 Gr. P-92 or equivalent.

(b) In case it is proposed by the bidder to use piping material equivalent to ASTM-A-335 P-92 for Main Steam and / or Hot Reheat Piping, Bidder shall be required to furnish a certificate of provenness of the material certifying the usage & satisfactory performance of the proposed material in Main Steam and/or Hot Reheat Piping/components for a reference plant (or applicable unit of reference plant) having rated main steam and/or Hot Reheat steam temperature at turbine inlet at least equal to or higher than the rated Main Steam and/or Hot Reheat steam temperature at turbine inlet offered by the bidder. Such reference plant(s) (or unit) should have been executed by the bidder himself or by others and should have been under operation for at least 50,000 hours or 6 years from date of commissioning of the applicable unit (of the reference plant).

c) If ASTM A335 P92 is offered/ used by the bidder/ contractor for piping (pipes, fittings, components, valves, etc.), maximum allowable stress values to be considered for calculating the thickness of piping (pipe, fittings, components, valve etc.) will be reduced by 10% w.r.t allowable stress value indicated in code case (ASME-B-31.1) for P-92. Similarly, if any proven material equivalent to ASTM-A-335-P92 is used, the maximum allowable stress to be considered for calculating the thickness of piping (pipe, fittings, components, valves etc.) will be reduced by 10% w.r.t allowable stress value indicated in the standard/code of that equivalent material.

2. LP Bypass downstream piping shall be of ASTM A335 P91/ ASTM A691 Gr.91 or ASTM A335 P22 /ASTM A691 Gr. 2¼Cr. CL-21/22 and fittings shall be ASTM A234 Gr. WP22/WP91, depending on design temperature. The fittings shall correspond to ASTM A234 with Grade corresponding to the pipe material. Single seam welded construction fittings are also acceptable with A691 piping. However all requirements as per ASME B31.1 including the requirements given in mandatory appendix-D, IBR & respective material code shall be fully complied with, in respect of welded fittings.

3. Bends in BFP-T Exhaust Piping to condenser shall be of alloy steel of A691-2¼Cr.CL-21/22 or A691-1¼Cr. CL-21/22.

4. EFW Pipes as per ASTM A672 Gr.B60 CL-12/21/22 are acceptable for carbon steel piping of sizes 500Nb & above if the design pressure and design temperature are such that it calls for pressure rating of ASME 300 class or below except CEP discharge Piping. However, in such cases where the main piping is of seamless construction, all branch/tap-off from it shall also be of seamless construction irrespective of the pipe size. The fittings of A672 piping shall correspond to ASTM A234 with Grade corresponding to the pipe material. Single seam welded construction fittings are also acceptable with A672 piping. However all requirements as per ASME B31.1 including the requirements given in mandatory appendix-D, IBR & respective material code shall be fully complied with, in respect of welded fittings.

5. EFW pipes as per ASTM A691 Gr.2¼ Cr. CL-21/22 are acceptable for alloy steel piping (upto design temperature 545 degree) of sizes 500NB & above if the design pressure and design temperature are such that it calls for pressure rating of ASME 300 class or below. However, in such cases where the main piping is of seamless construction, all branch/tap-off from it shall also be of seamless construction irrespective of the pipe size. The fittings of A691 shall correspond to ASTM A234 with Grade corresponding to the pipe material. Single seam welded construction fittings are also acceptable with A691 piping. However all requirements as per ASME B31.1 including the requirements given in mandatory appendix-D, IBR & respective material code shall be fully complied with, in respect of welded fittings.

6. Materials used for pipe fittings, specialties and valves shall be corresponding to pipe material, unless specified otherwise.

7. Spherical WYE-piece (made of seamless forged components) as per TRD-303 / EN 13480-3 for high temperature applications is also acceptable.

8. For Boiler Feed Discharge piping or Re-heater attemperation, material conforms to 15NiCuMoNb5 (EN 1.6368)/ASTM A335 Grade P36 are acceptable as an alternate material to the specified material ASTM A106 Grade C. subject to meeting the following conditions:

   a) Material for stubs, laterals, Boss etc. which are to be welded on to the main pipe (15NiCuMoNb5 (EN 1.6368)/ ASTM A335 Grade P36) shall corresponds to either the pipe material or ASTM A105.

   b) Valves body shall be of forged construction and material shall corresponds to 15NiCuMoNb5 (EN 1.6368)/ ASTM A335 Grade P36 or A105.

   c) Maximum permissible operating temperature for the material shall not exceed 310 deg. C.

   d) The contractor / sub-contractor should have experience in fabrication & welding of feed water piping / re-heater attemperation with 15NiCuMoNb5/ASTM A335 P36.

e) If use of P36 piping by TG contractor calls for dissimilar material connection at terminal points (TP), supply of matching pieces required and dissimilar material welding at TP shall be in the scope of TG package contractor.

8.00.00 SPECIFICATION FOR VALVES

8.01.00 **Cast/Forged Steel Valve (Gate/Globe/Check 65 NB size & above)**

Sl. No.	Description	Carbon Steel		Alloy Steel		Stainless Steel
		600 Lbs& below	Above 600 Lbs	600 Lbs& below	Above 600 Lbs	400 Lbs& below
1.0	Basic Standard	ANSI B16.34				
2.0	Construction					
A	Bonnet/Cover	Bolted type	Pressure Seal	Bolted type	Pressure seal	Bolted Type
B	Disc					
	Globe valves	Throttling type plug				
	Check valves	Twilting/swing type				
	Gate valves	Solid/flexible wedge below 100 NB				
		Flexible wedge for 100 NB & above				
C	Seat	Integral type / Welded Type				
3.0	**Material**					
A	Body & Bonnet Cover	ASTM 216 Gr. WCB (Refer note below)	ASTM 216 Gr. WCC (Refer note below)	ASTM A217Gr. WC6 ASTM A217Gr. WC9 ASTM A217Gr. C12A ASTM A-182 Gr.F92 or equivalent (Refer Note-3)		ASTM A351 CF8/CF8M
B	Stem	13% chrome steel ASTM-A-182 Gr.F6a / ASTM A 564 Type 630 H 1150 D / ASTM A 565 GR 616 / ASTM A 565 GR 660 / A479 Type 410 / A479 Type 431/ A479 Type XM-19 / 16Cr-Ni-Mo (Ohtaron) or better				ASTM 182 F316/F304
C	Hinge pin(for check valves)	13% chrome steel ASTM A-182 Gr F6a or better				ASTM 182 F316/F304
D	Disc and seat ring (heat treated & hardened)	ASTM A216 Gr. WCB Minimum Hardness 250 BHN Refer note below)	ASTM A216 Gr. WCC Refer note below)	ASTM A-217 WC6 ASTM A-217 WC9 ASTM A-217 C12A ASTM A182 F92 or equivalent. (Refer Note-3)		ASTM 182 F316/F304
			Seating surface hard faced with stellite 350 BHN			
E	Back seat/ stem guide Bushing	ASTM A 182, Gr. F6a 13% Cr. SS with stellite hard facing				ASTM 182 F316/F304

8.02.00 **Forged Steel Valves (50 mm NB & below - Gate/Globe/Check)**

Sl. No.	Description	Carbon Steel	Alloy Steel	Stainless Steel
1.0	**Design Standard : ASME B 16.34**			
2.0	**Construction**			
A	Bonnet/cover	Bolted type for 600/800 lbs Seal welded type for 900 lbs and above		Seal welded/ Bolted type for 600/800Lbs. Sealed welded above 800lb
B	**Disc:**			
	Gate	Solid wedge type		
	Globe	As per manufacturing std.		
	Check	Piston lift		
C	Seat	Integral type		
3.0	**Material**			
A	Body & Bonnet Cover	ASTM A-105	ASTM A-182 Gr.F11/ ASTM A-182 Gr.F22/ ASTM A-182 Gr.F91/ ASTM A-182 Gr.F92 or equivalent / (Refer Note-3)	ASTM 182 F316/304
B	Stem	13% chrome steel ASTM-A-182 Gr.F6a/ ASTM A 564 Type 630 H 1150 D/ ASTM A 565 GR 616/ ASTM A 565 GR 660/ A479 Type 410 / A479 Type 431/ A479 Type XM-19 or better.		ASTM 182 F316/304
C	Disc and seat ring	ASTM A105 hard faced with stellite minimum hardness 350 HB	ASTM A182 Gr.F22 ASTM A 182 Gr F91/F92 or equivalent ASTM A 182 Gr F11 /hard faced with stellite minimum hard ness 350 HB	ASTM 182 F316/304 hard faced with stellite Minimum hardness 350 HB

8.03.00 **Angle Globe Valves**

	Alloy Steel	**`Carbon steel**
Design Standard	ASME B16.34	ASME B16.34
Material:		
Body & Bonnet	A182 Gr.F11/F22/F91/F92 or equivalent. (Refer Note-3)	A105 or better
Spindle/Disc	17% Chrome steel or better	17% Chrome steel or better
Disc Seat	Stellited	Stellited
Body Seat &back seat	Stellited	Stellited
Gland Packing	Graphite	Graphite
Construction:		
Valve type	Outside Screw & Yoke Type	

Body &Bonnet	Forged body with integral /welded bonnet construction for size 50Nb & below and Cast body with integral /welded bonnet construction for sizes above 50NB.
Disc type	Taper plug or Parabolic type to suit system requirement
End Connection	Socket weld end (ANSI B16.11) for sizes 50 NB & below and Butt weld end (ANSI B16.25) for sizes above 50 NB. However, butt weld end (as per ANSI B 16.25) is also acceptable for valves sizes 25 NB / 40 NB / 50 NB on corresponding size of piping having thickness schedule 80 & above.
Pressure rating	To suit the service condition. However, minimum pressure rating shall be corresponding to ANSI Class 1500

8.04.00 **Other Valves (65 mm and above)**

S. NO.	DESCRIPTION	SAFETY VALVE		RELIEF VALVE	BF VALVE
		ALLOY STEEL	CARBON STEEL		
1.0	Basic standard	ANSI B16.34			AWWA C-504 / C-516
2.0	Pressure Class	400 lbs& below			75 B and above
3.0	Accumulation	10% (max.)			-
4.0	Blow down	5% (max.)		10% to 15%	-
5.0	Construction				
5.1	General	Spring loaded with weld end / flanged End inlet, pop up type # Refer Note below		Spring loaded with flanged inlet & outlet	Long body, butt Welded
5.2	Bonnet	Bolted type			-
5.3	Seat bushing	Renewable type screwed on and held in position by pin / WELDED-IN TYPE BUSHING.			-
5.4	Shaft seat	-	-	-	'O' ring type
6.0	Materials				
6.1	Body & Bonnet/ cover	ASTM A-217 WC6/WC9/C12 A/A182 Gr.F92 or equivalent. (Refer Note-3)	ASTM A216 Gr. WCB / WCC		ASTM A216 Gr. WCB
6.2	Spindle/Shaft	Stainless steel			ASTM A182 Gr.304
6.3	Disc, nozzle, seat ring	DISC : A 565-616T / ASTM A182 F316 F316L / ASTM A276 Type 316L or equivalent SEAT RING : ASTM A182 F316 / F316L **NOZZLE** ASTM A182 F316 / F316L	A105 with 17% Cr (hard faced) or better		ASTM A 216 Gr. WCB **Seal & O- Ring:** -EPT/BUNA-N/ Neoprene for water service -EPT/EPDM for steam service
6.4	Spindle guide	17% chrome steel or monel, heat treated and hardened to minimum hardness 250 HB			

S. NO.	DESCRIPTION	SAFETY VALVE		RELIEF VALVE	BF VALVE
		ALLOY STEEL	CARBON STEEL		
6.5	Spring	Stainless steel or Tungsten steel/ Chromium alloy	Carbon steel		--
6.6	Retainer Rings and internal bolts Etc	--	--	--	SS 304
6.7	Bearing	--	--	--	Sleeve type, self-lubricated

NOTE:

1. For Pressure Class 400 LBS and below: Spring loaded with weld end / flanged End inlet, pop up type.
2. For Pressure Class above 400 LBS: Spring loaded with weld end inlet, pop up type.
3. For valves (all sizes) coming on A335 P92 or equivalent pipe line, valve body material shall be ASTM A182 F92 or equivalent and of forged construction.
4. Materials of valve trim shall be suitable for the design parameters.
5. Forged valve body construction in lieu of Cast valve body construction is also acceptable. However, material (ASME forged grade) shall correspond to the specified valve material/pipe material.

8.05.00 Specific Requirements

1. Valves of size 65 NB and above shall have butt welded ends as per ANSI B16.25 and Valves 50 NB and below shall have socket weld ends as per ANSI B16.11. However, butt weld end (as per ANSI B 16.25) is also acceptable for valves sizes 25 NB / 40 NB / 50 NB on corresponding size of piping having thickness schedule 80 & above.
2. Locking arrangement, wherever specified shall be of non-detachable type.
3. Valves shall be tested in accordance to ANSI B 16.34. However, for butterfly valves, the requirements of AWWA C-504, C516 shall also be met including POD test (where POD test results of representative valve is not available).
4. All gate and globe valves shall be with outside screw and yoke with rising stem. However for Valves sizes 2"and below Bidder may provide rising wheel design valve also.
5. Gate valves below 100 NB shall be solid wedge/flexible wedge type, valves of size 100 NB and above shall be of flexible wedge type. However, for sizes 100 mm NB and above and with class above 600, parallel slide valves are also acceptable.
6. Specification for valve actuators shall be as indicated in C&I Subsection
7. Stem for all valves shall be heat treated and hardened - minimum, hardness 200 HB and surface finish of 16 RMS or better in area of stem packing.
8. Gland packing for gate and globe valves shall be alloy steel/SS wire reinforced graphite with stem corrosion inhibitor.
9. All bolts and nuts shall be ASTM A-193 Gr. B 7 and ASTM A-194 Gr. 2H respectively.
10. Hand wheels for valves shall be of malleable iron / Carbon steel.
11. Minimum differential hardness between seat and other disc material shall be 50 HB in case of 13% chrome hardened with heat treatment of steel.
12. Valve closure test shall be as per ASME B16.34 and MSS-SP-61
13. Safety and Relief valves shall be supplied complete with discharge elbow and drip pan along with drain.
14. For valves of size 65 NB and above in vacuum service, water gland-sealing arrangement shall be provided. For valves of size 50 NB and below, deep gland

packing shall be provided. Butterfly valves, subjected to vacuum, shall be tested for vacuum as per relevant code

15. Valves 50NB and below shall be globe type unless otherwise specified elsewhere.
16. All globe valves shall be equipped with throttling cones with parabolic characteristic.
17. Unless otherwise agreed, all valves shall be fitted with the spindle in upright position.
18. The minimum inside diameter for valves shall be as per requirements of ASME B16.34. For valves beyond the listed sizes & rating in Table-A of non-mandatory Appendix-A of ASME B16.34, the minimum diameter of valve flow passage shall not be less than 90% of pipe inside diameter. However, reduced port valves are also acceptable for sizes 65NB and below.

9.00.00 SPECIFICATION FOR HANGERS/SUPPORTS

9.01.00 Design and Manufacture of Hangers/Supports shall conform to ANSI B 31.1, MSS-SP-58 and MSS-SP-89.

9.02.00 Where hanger rod angularity exceeds 4 degrees from cold to hot position (at rated parameters), the hanger and structural attachments shall be offset in the cold position in such a manner that the hanger rod shall be within 4 degree in hot position unless otherwise specified.

9.03.00 The Contractor shall furnish detailed arrangement sketches for each support, restraints, anchor, etc. The sketches shall include the key plan identification no., bill of quantities, design load, operating load, spring stiffness, amount of pre-compression, center line elevation of pipe, spring box position/orientation, etc.

9.04.00 Hangers support tag no. shall be marked on all pipe hangers/supports, restraints and anchor assemblies. The design loads, hot and/or cold loads shall be stamped on respective constant and variable springs.

9.05.00 **TECHNICAL REQUIREMENTS**

(a.) Each threaded connection and adjustable rod shall be provided with lock nuts.

(b.) Each rod of a double rod hanger support shall be designed for the full hydro test load coming on the double rod hanger assembly.

(c.) Hanger support rods of less than 10 mm diameter for supporting pipes of 50 Nb and smaller and less than 12 mm diameter for supporting pipes of 65 mm Nb and larger, shall not be used.

(d.) Parts of the hanger or support which move relative to the pipes during operation, shall be connected to the pipe attachments in such a manner that they lie entirely outside the pipe thermal insulation.

(e.) Attachments to piping shall be as far as possible by clamps. Material for all attachments welded to pipe shall be of material corresponding to pipe material or approved equivalent. Further, material of pipe clamps used shall be suitable for the design temperature of the piping concerned.

(f.) Where axial movement is to be restricted or riser clamps are used, suitable lug stops to prevent pipe movement shall be designed for welding on to pipe.

(g.) Bolted pipe clamps shall have a minimum thickness of 5 mm for weather protected locations and 6 mm for locations exposed to weather.

(h.) Beam clamps shall be forged steel equipped with a rod to fix a nut.

(i.) All sliding surfaces of supports and restraints shall have Teflon lining on one surface coming in contact with stainless steel lining on the other surface.

(j.) All pipes hangers and supports shall be designed to carry the weight of the piping fitting, thermal insulation, self-weight of the hanger assembly and medium transported or test medium whichever is heavier. In addition, all rigid rod hangers and variable spring shall be designed to carry the operation load in hot condition.

9.06.00 **Spring Hangers**

(a.) Constant load hangers shall generally be used when vertical displacement exceeds 40 mm or where the supporting effort variation of available variable spring exceeds 25%.

(b.) Constant load hanger shall be of moment-coil-spring counter balanced design or cam & spring type. Variable spring hangers shall be of helical spring design. Spring hanger/ assembly shall be constructed such that complete release of piping load is impossible in case of spring misalignment or failure.

(c.) Constant load hanger shall have a minimum field adjustment range of 15% of the load. The total travel for constant load hangers shall be design travel plus 20% but in no case shall the difference between total travel and design travel be less than 25 mm. The supporting effort variation throughout the travel range of constant load hangers shall not exceed 6%.

(d.) Variable spring hangers shall have supporting effort variation of not more than 25% throughout the total travel range.

(e.) All springs shall remain under compression throughout their operating regime and never under tension.

(f.) Spring hangers shall have provision for locking the hangers in any position of the travel.

(g.) Spring hangers shall be adjusted to the cold position before shipment and locked in that position. The cold and hot position shall be clearly marked on the travel indicator scales.

(h.) All spring hangers shall be locked before performing the hydro test. The locking shall be removed before the line is placed under operation.

9.07.00 **SNUBBERS**

a Snubbers shall be designed to allow normal movement of pipe due to thermal expansion and shall require minimal maintenance.

b The rated load/nominal load of selected snubber shall not be less than 1.25 times of the maximum calculated load on the Snubber.

c Snubber shall have convenient means for determining rod extension.

d Axes of snubbers/ restraints shall be parallel to the direction of the expected reaction force in operating condition.

e Construction of snubbers: At least piston & Cylinder (which is in contact with fluid) shall be made of stainless steel material (SS 304 or better). Non – stainless steel parts of snubbers exposed to atmosphere shall be provided with proper corrosion protection.

f Supporting Structure of the Snubbers shall be designed to withstand twice the rated load of the snubber.

9.08.00 **Restraint & Anchors**

(a.) All anchors shall be designed for direct rigid fastening to the structural steel member.

(b.) Anchors, guides and restraints shall be capable of withstanding the forces and moments due to thermal expansion and dynamic effects.

9.09.00 **Testing and Inspection**

(a.) All shop tests shall be conducted in accordance with ANSI standards and other applicable codes/standards.

(b.) Each Constant load hanger shall be tested before delivery to ensure that the variation in supporting capacity provided through specified range does not exceed 6%.

(c.) Each variable load spring hangers shall be tested before delivery for its spring stiffness.

(d.) Material test and analysis:

All materials shall be furnished in strict accordance with the applicable codes. All sources of materials shall be disclosed and relevant test certificates giving precise details of identification of material for the physical and chemical properties shall be submitted to the Employer/Project Manager.

(e.) All hangers\supports\restraints etc. on piping shall be inspected for the conditions mentioned elsewhere in the specification and log reports to be submitted to employer for their review.

10.00.00 STEAM TRAPS AND STRAINERS

10.01.00 Steam traps shall be of inverted bucket/thermo static type with integral or separate Y-type strainers.

10.02.00 Traps shall have stainless steel internals.

10.03.00 All Y-type strainers shall have stainless steel screen of not more than 20 mesh size. Screen open area shall be at least four (4) times the pipe cross sectional area.

10.04.00 Strainers shall have screwed blow off connection with removable plug.

10.05.00 All traps and strainers shall have socket weld ends as per ANSI B 16.11 for size 50 mm Nb and smaller and butt weld ends as per ANSI B 16.25 for sizes 65 mm Nb and larger.

10.06.00 Y-type strainers shall be provided along with each steam trap in case the strainer does not form an integral part of the trap.

11.00.00 SPECIFICATION FOR THERMAL INSULATION

11.01.00 **Insulation Materials, Cladding and Accessories**

(a.) The insulating material and cladding material shall be as per the tables of material given in the subsequent clauses.

(b.) All insulating materials, accessories and protective covering shall be non-sulphurous, incombustible, low chloride content, chemically rot proof, non-hygroscopic and shall be guaranteed to withstand continuously and without deterioration the maximum temperature to which they will be subjected under the specification conditions.

(c.) The use of insulation of finishing materials containing asbestos in any form is not permitted.

(d.) Insulation mattress/section shall be supplied in thickness of 25, 40, 50 and 75 mm. Insulation of higher thickness shall be made up in multiple layers using mattress/slabs of thickness specified above. However, if the required thickness is not achieved, the mattress/slabs in increment of 5mm shall be acceptable. The min. thickness shall not be less than 25 mm & number of layers shall be min. & the innermost layer shall be thickest.

11.02.00 **Insulation Materials**

(a.) Rock/glass wool insulation mattress shall be of long fibered rock or glass processed into fibrous form bonded with a binder. No Kind of slag wool inclusion is acceptable.

(b.) Calcium silicate pipe insulation shall be composed principally of hydrous calcium silicate reinforced with mineral fiber, it should be asbestos free.

(c.) All insulation shall conform to the quality requirements laid down below and test certificates on samples from the lot to be supplied shall be furnished to employer for approval.

(d.) Ceramic Fiber insulation shall be of high purity Alumina-silicate materials. Ceramic Fiber is produced by melting these products in an electric arc furnace, a stream is poured and cooled to form the fiber strands.

11.03.00 **Others Accessories**

The Contractor shall also provide other accessories such as ceramic boards, sealants and washers as required.

11.04.00 **Installation**

(a.) All surface to be insulated shall be cleaned of all foreign materials such as dirt, grease, rust etc. and shall be dry before the application of insulation.

(b.) Before applying the insulation the contractor shall check that all instrument tapings, clamps, lugs and other connections on the surface to be insulated have been properly installed as per the relevant erection drawing.

(c.) All flanged joints shall be insulated only after the final tightening and testing.

(d.) The insulation shall be applied to all surfaces when they are at ambient temp. Ample provision shall be made for the maximum possible thermal movement and the insulation shall be applied so as to avoid breaking/telescoping due to alternate periods of expansion and contraction.

(e.) All cracks, voids and depressions shall be filled with finishing cement, suitable for the equipment operating temp. so as to form a smooth base for the application of cladding.

11.05.00 **Insulation Materials**

	Type # 1	**Type # 2**	**Type # 3**	**Type # 4**	**Type # 5**	**Type # 6**
Type	Lightly resin Bonded mineral (rock) wool	Lightly resin bonded mineral (rock) wool	Resin bonded mineral (rock) wool preformed pipe section	Resin bonded glass wool preformed pipe section	Calcium silicate preformed block type	Ceramic Fiber
Apparent Density	120-150 Kg/M³	100 Kg/M³	140-150 kg/M³	60-80Kg/M³	200-250Kg/m³	128 Kg / m3
Mtl. Standard	IS:8183	IS:8183	IS:9842	IS:9842	IS:8154	IS : 15402
Applicable Service	Piping system & equipment with operating temp. in range of 400-500 deg. C	Piping system & equipment with operating temp. in range of 60-400 deg. C	Piping system of 350 NB and below with temp. in range of 60 – 500 deg. C	Piping system of 350 NB and below with operating temp. in range of 60-400 deg. C	Piping system & equipment with operating temp. in range of 400 – 500 deg. C	Refer Note #1 below
Testing Requirement	As per IS:8183	8183	IS:9842	IS:9842	IS:8154	IS : 15402

Note # 1: For piping system & equipment with operating temp 500 deg. C and above (except Vent and drain Lines). However, for drains & vent lines of operating temperature 500 Deg. C and above either Lightly resin Bonded mineral (rock) wool or ceramic fiber or combination of ceramic fiber & LRBM of suitable thickness as per approved calculation can be provided.

11.06.00 **Cladding Material & Accessories shall be as specified here under.**

Sl.No.	Item	Basic Specification	Description
1.	Cladding	Aluminium ASTM B-209-1060 temper H14 or IS:737 Gr.19000/H2	Thickness of sheathing (a) 18SWG (1.219mm) for diameter for insulated surface 450 mm and above and for flat surfaces (b) 20 SWG (0.91 mm) for diameter of insulated surface 150 mm and above upto 450 mm. (c) 22 SWG (0.71 mm) for diameter of insulated surface 150 mm and below.
2.	Binding & lacing wire	Galvanised Steel wire to IS: 280 for temp. below 400°C and stainless to IS:6528 for temp above 400°C	20 SWG for all insulation interface temperature
3.	Straps & Bands	(i) Aluminium where interface temperature are below 400 deg.C (ii) Stainless steel where temperatures are above 400 deg.C	Band shall be 20 mm wide and 0.6 mm thick for securing Aluminum Sheathing anodized aluminum bends shall be used.
4.	Screws	Stainless steel	Self-tapping, chese headed
5.	Hexagonal wire mesh	(i) (i) Galvanized steel wire to IS:280 mesh for interface temperature upto 400 deg.C. (ii) Stainless steel wire for temperature above 400 deg.C	Wire mesh netting shall be 10 to 13 mm aperture at least 0.56 mm diameter wire.

CLAUSE NO.	TECHNICAL REQUIREMENTS
11.07.00	**Installation on Piping**
	(a.) All vertical pipes shall be provided with the suitable insulation supports to prevent collapsing/crushing of insulation due to its self-weight. Support rings shall be provided on all vertical piping with a difference in elevation of 4 meter or above, and there shall not be more than 3 meter straight length between support rings.
	(b.) Longitudinal joints of insulation mattresses sections of horizontal piping shall be on the bottom or at the sides of the pipe.
	(c.) When more than one layer of insulation mattress/section is required on piping the circumferential joints on adjacent layers shall be staggered by at least 150 mm and longitudinal joints shall be staggered by at least 50 mm.
	(d.) The mattress type insulation shall be formed to fit the pipe and applied with the mattress edges drawn together at the longitudinal joints and secured by lacing wire. Pipe section insulation shall be fitted on pipe using binding wires.
	(e.) Where insulation is applied in single layer or multi layers each layer of mattress shall be backed with hexagonal wire mesh. For pipe sections, the sections shall be held in place by binding wires without any wire mesh.
	(f.) The ends of all wire loops shall be firmly twisted together with pliers, bent over and carefully pressed into the surface of the insulation. Any gap in the insulation shall be filled with loose mineral wool or finishing cement.
	(g.) Insulation mattress/section ends shall be terminated at a sufficient distance from the flanges to facilitate removal of bolts.
	(h.) The insulation shall be held in place by fastening over with binding wire for insulation surface with diameter upto and including 550 mm and with metal bends for insulation surfaces with diameter over 550 mm. The fastening shall be done at intervals of 250 mm except where specified otherwise. The ends of the binding wires shall be hooked and embedded in the insulation. The straps shall be mechanically stretched and fastened with metallic clamping seals of the same materials as the strap.
	(i.) Insulation for application on bends and elbows shall be cut into mitered segments, sufficiently short to form a reasonably smooth internal surface. After the application of insulation material in place, insulating cement shall be applied as required to obtain a smooth surface.
	(j.) Weather hoods shall be provided for insulated piping passing through floors/walls.
	(k.) All pipe attachments coming on horizontal pipes, inclined pipes and bends shall be insulated along with pipe such that there will be no insulation applied to hanger rod and the component connecting hanger rod to pipe attachment. All pipe attachments exposed to weather shall be provided with weather proof.
	(l.) Upstream of all drain lines and the lines connected to steam traps, shall be insulated upto and including first isolating valve for heat conservation. Rest of such lines such as downstream of the drain valves, traps etc. and other lines such as safety valve discharges, vents, etc. shall be insulated for personnel protection.
11.08.00	**Installation on Valves and Fittings**
	(a.) All valves fittings and specialties shall be insulated with the same type and thickness of insulation as specified for the connected piping with the special provisions and or exceptions as given below.
	(b.) All valves and flanges shall be provided with removable box type of insulation covered with box fabricated from aluminum sheets of thickness same as the connected pipe cladding. Adjoining pipe insulation shall be beveled back to permit removal bolts and nuts or bands. The portion of the valve which cannot be covered by box type insulation shall be filled by loose insulating material of packing density at least equal to that of the insulating material of adjoining pipe. The insulation for valves/flanges shall be applied

CLAUSE NO.	TECHNICAL REQUIREMENTS

after the finishing has been applied over the connected piping. The cladding shall be applied in such a manner that the bonnet flange can be exposed easily without disturbing the complete insulation and cladding.

(c.) Expansion joints, metallic or rubber shall not be insulated unless otherwise specifically indicated.

11.09.00 **Insulation on Equipment**

a	The insulation applied to the equipment shall be reinforced with hexagonal wire mesh. One layer of wire mesh shall be provided on the equipment surface prior to application of insulation.
b	Installation on horizontal cylindrical vessel/tanks (including heaters, deaerator, heat exchanger etc.).
c	All the surfaces of insulation layers, applied on horizontal cylindrical vessels shall be securely fastened by bands upto vessel/tank outer diameter of 150 mm and below. Where vessel/tank outer diameter exceeds 1500 mm, binding wire passing through insulation clips provided both longitudinally and circumferentially at 500 mm centers shall be used. Gaps in the insulation shall be filled with loose mineral wool and finished with finishing cement so as to obtain a smooth surface for the application of cladding. The contractor shall provide support ribs/lugs on the surface of the vessel/tank as necessary. The contractor shall obtain the approval of the 'Employer' and the equipment supplier's field engineering representative before performing any welding on equipment. Any heat treatment requirement as per recommendation of equipment supplier shall be performed by the contractor.
d	Installation on Vertical cylindrical Vessel/Tanks (including flash tanks etc.)
e	All vertical vessels/tanks shall be provided with support rings/ribs with other necessary frame work to take up the weight of the insulation prior to HT. The contractor shall obtain the approval of the 'Employer' and the equipment supplier's field engineering representative before performing any welding on equipment. Any heat treatment of vessel/equipment that is required after welding of rings/ribs on the vessel/equipment shall be as per recommendation of equipment supplier and shall be performed by the contractor.
f	The mattresses shall be held in position by means of 9 SWG steel wire nails, the nails being 25 mm longer than the thickness of insulation to be applied. After the mattresses have been placed over the nails, the nails shall be bent and embedded in the insulation. Alternatively, wire loops may be tack welded at 250 mm centers to hold the insulation in place

11.10.00 **Installation of Cladding**

(a.) All insulation shall be protected by means of an outer covering of aluminum sheathing. All insulation/cladding joints shall be sealed and made effectively weather and waterproof. All flat surfaces shall be given suitable slope to prevent collection of pools of water on the cladding surface.

(b.) All longitudinal joints shall have a minimum overlap of 50 mm and shall be located at 45 deg. or more below the horizontal for horizontal equipment. Joints shall be made with cheese headed self-tapping galvanized steel screws at 150 mm centers.

(c.) All circumferential joints shall have a minimum overlap of 100 mm and shall be held in position by stainless steel or anodized aluminum bands, stretched and clamped.

CLAUSE NO.	TECHNICAL REQUIREMENTS
	(d.) Removable box type cladding for valves and flanges shall be fitted on the connected pipe cladding, with bands. (e.) Aluminum cladding shall not come directly into contact with either the equipment surface or with the supporting arrangement on the equipment surface. To this end, adequate layers of 3 mm thick ceramic board shall be provided between the cladding and any supporting arrangement equipment surface, and fitted with self-tapping screws/metal bands, as applicable. (f.) For bends, fittings etc. the cladding shall be provided in segments as to ensure a smooth finish of the cladding. (g.) For cladding on vertical pipes/equipment, provision for load take up shall be made at every 2 to 4 meters along pipe/equipment axis. (h.) All joints shall be sealed with acrylic emulsion weather barrier. (i.) Galvanic corrosion shall be prevented by carefully avoiding permanent contact of aluminum cladding with copper, copper alloys, tin, lead, nickel or nickel alloys including monel metal.
11.11.00	**Testing and Guarantee** (a.) All tests, as per the applicable material standards and as specified shall be carried out in accordance with the methods prescribed. Employer shall have the right to witness any or all of the tests conducted by the contractor at the shop or laboratory. (b.) The Contractor shall guarantee that if on actual measurement the specified maximum insulation surface temperatures are exceeded, the contractor shall either replace the insulation with a superior material or provide additional insulation thickness at no extra cost.
12.00.00	**SPECIFICATION FOR HYDROSTATIC TEST OF PIPING SYSTEMS**
12.01.0	On completion of installation/erection of the piping systems a hydraulic test in accordance with the requirements of the Indian Boiler Regulations/ASME B31.1, as applicable, shall be performed by the Contractor. The procedure adopted for hydraulic test shall have the prior approval of the Employer. The detailed schemes and procedure for carrying out hydraulic testing shall be prepared and furnished by the contractor and it shall be discussed and finalized during detailed engineering stage.
12.02.0	Cutting/welding/edge preparation and re-welding required for blanking, temporary piping connection and/or for replacements by spool pieces including reinstallation of components/piping systems after hydraulic testing shall be the responsibility of contractor.
12.03.0	The water for hydraulic test shall be made alkaline by addition of suitable chemicals. After the test, high pressure external piping shall be suitably drained and preserved.
12.04.0	All blank flanges/blanks, Caps, removable plugs, temporary valves, pipes & fittings, spools, blanking inserts/hydraulic kit for stop valves/control valves, other accessories & services etc. ,as applicable, for carrying out hydraulic testing of piping shall be furnished by the Contractor. The pressurization equipment including water piping as needed for the above test shall also be furnished by the Contractor. Any defect noticed during the testing shall be rectified and the unit shall be retested by the Contractor. However, if the hydro test of critical piping (MS, HRH, CRH) in SG Contractor / employer scope is to be carried out with HPT Stop valve & IPT Stop valve / CRV / OLV in the as installed position on critical piping, then the TG contractor / valve supplier to provide hydraulic kit / inserts / blanking plates / valve head, gaskets, bolts & nuts etc. for the valves to enable the SG contractor / employer to perform the hydro test of critical piping with these valve in circuit.

CLAUSE NO.	TECHNICAL REQUIREMENTS
12.05.0	In case any piping (in other's scope) connection to/from the contractor's scope of piping are not ready or not erected at the time of hydro testing of contractor's scope of piping, then the contractor to provide necessary blanking arrangement as required at these branch connections / tap-off locations to complete the hydro testing of his scope of piping.
12.06.0	The hydraulic test shall be considered successful only on certification to that effect by the concerned inspecting authority as per the provision of the IBR and the Project Manager.
13.00.00	**SPECIFICATION FOR CHEMICAL CLEANING OF PIPING SYSTEMS AND EQUIPMENTS**
13.01.00	It is intended to chemically clean the following piping system (a.) Boiler feed piping up to Economizer inlet NRV (i.e.including SG scope of FW piping) (b.) Heater drains piping (c.) Main condensate piping (d.) Extraction steam piping (e) Reheater spray piping (f.) Any other piping system in contractor's scope to be cleaned through chemical cleaning as per the procedure prepared by contractor and approved by employer during detail engineering. (g.) The following equipment which form a part of the above system shall also be included in the cleaning operation. (i.) H.P. Heaters (ii.) L.P. Heaters (iii.) Deaerator (iv.) Gland steam cooler (v.) Drain cooler (vi) Any other equipment in contractor's scope to be cleaned through chemical cleaning as per the procedure prepared by contractor and approved by employer during detail engineering. Note: In case chemical cleaning is not to be performed as per the standard practice of the bidder for any of the above-said equipment under bidder's scope, then suitable alternate measures are to be mutually discussed & agreed during detailed engineering after award.
13.02.00	Before introducing chemicals, all the piping systems and equipment listed above shall be water flushed. Water flushing will be followed by alkaline cleaning acid cleaning and passivation.
13.03.00	However, the Bidder shall submit along with the offer his usual procedures and practices for chemical cleaning of the piping and equipment specified. The Bidder shall submit all schematics, write up, details of chemicals to be used etc. and detailed procedures he intends to follow. These schematics and procedures shall be subject to the approval of the Employer.
13.04.00	**Pre-Cleaning Procedure** Prior to starting any phase of cleaning operation the following procedures shall be ensured. A Installation of all temporary piping, valves, pumps and equipments as required for the flushing and chemical cleaning operations.

CLAUSE NO.	TECHNICAL REQUIREMENTS
	B Temporary piping shall be routed at floor level as far as possible and secured in place to prevent movement/vibration beyond acceptable limits. C Installation of the instruments as required to ensure satisfactory monitoring and control of the cleaning process. The Contractor shall also determine and arrange locations for sampling of the cleaning solution during cleaning. D Bypassing all regulation/control valves coming in the cleaning circuit or installation of temporary spool pieces. E Installation of special end covers and temporary suction strainers, for boiler feed pumps and condensate pumps. Pump internals shall not be installed. F Installation of plastic seal in the condenser neck to protect the turbine from alkaline fumes. G Blocking and securing of all spring hangers in the steam lines which may be flooded during the cleaning operation. H Hand cleaning of the interiors of all vessels which are included in the cleaning operation.
13.05.00	**General Cleaning Procedures** (a.) Seal water lines to pump shall be broken and flushed. (b.) Where pipeline terminate in spray headers, these headers shall be inspected after each phase of the cleaning operation and cleaned if necessary. (c.) All strainers shall be observed closely during the cleaning operation by reading differential pressure gauges, and shall be cleaned when the differential pressure exceeds a predetermined value. (d.) All high points, vents shall be opened periodically to ensure full system flow. (e.) Upon completion of each stage of cleaning, the waste products shall be drained and transferred to the waste treatment basins (required waste water treatment basin/ neutralization pit shall be provided by bidder in consultation with project manager). The Contractor shall then supply and add the necessary chemicals to the basin to neutralize all waste solutions and rinses generated by the cleaning process, and arrange for its disposal to an area to be indicated by the Employer/Engineer. (f.) Strictest safety precautions shall be exercised at all times during the chemical cleaning and during storage and handling of the chemicals. The Contractor shall ensure provision of all protective clothing, apparatus and equipment along with necessary first aid kits as required for handling the chemical and for carrying out the cleaning operation.
14.00.00	**SPECIFICATION FOR STEAM BLOWING OF PIPING SYSTEMS**
14.01.00	Steam blowing of contractor's scope of piping systems shall be performed by the contractor. Contractor shall submit their recommended procedure for steam blowing operation of these piping systems along with scheme/ layout/ drawings giving step by step procedure for performing steam blowing of each these piping systems to the Employer for their approval. However, for purposes of bidding, the bidder shall make an estimate based on his experience for the piping system defined below, taking into consideration all temporary piping, consumables etc. required

CLAUSE NO.	TECHNICAL REQUIREMENTS
14.02.00	Steam blowing shall include engineering, supply and installation of all temporary piping, valves, fittings including quick actuating valves (for puffing purposes), supports, blanking plates, blow tools, valve head/valve blanking cover plate, pipe spools, target plates, devices for protection of valves/equipment in steam blowing circuit, instruments, controls and all other accessories & services required to complete the cleaning process as specified herein.
14.03.00	Steam blowing shall also include reinstatement of cleaned piping systems and dismantling/removal of all temporary piping, equipment and other materials etc. from site. All temporary piping, valves, equipment and materials shall be taken back by the contractor upon satisfactory completion of cleaning/steam blowing and shall be removed from the Employer's premises.
14.04.00	Engineering involved regarding temporary piping shall include the following: a Selection of temporary piping. b Preparation of layout of temporary piping and performing stress analysis as per ASME B 31.1. c Selection of temporary hangers and supports as required.
14.05.00	The following piping systems shall be cleaned through steam blowing operation. 1. Main Turbine gland sealing system 2. Boiler Feed Pump Drive Turbine gland sealing system 3. Steam lines feeding turbines of boiler feed pump. 4. Steam lines to Deaerator 5. MS/ CRH/ HRH/ LP Bypass piping in TG bidder's scope 6. Any other piping systems in contractor's scope to be cleaned through steam blowing (as finalized during detailed engineering). Note: In case steam blowing is not performed for cleaning as per standard practice of the bidder for any of the above-said piping system under bidder's scope, then TG contractor shall submit, their recommended cleaning procedure for these piping systems for employer's review and approval which are to be mutually discussed & agreed upon during detailed engineering.
14.06.00	Steam blowing shall be carried out for removal of particles (rust, scales, weld splatter etc.) from various piping systems to avoid damage to turbine. Cleanliness of system shall be checked by means of test plates made of steel or as recommended by Turbine / Equipment OEM (As per Turbine / Equipment OEM proven practice) which will be installed in the center line of the piping system.
14.07.00	Cleaning shall be achieved by steam purging i.e. by blowing of steam through the piping such that the momentum of flow is greater than that of steam flow during normal operation of unit (at MCR). The disturbance factor during steam blowing (ratio of momentum of flow during purge to that during MCR) shall be more than 1.0.
14.08.00	The blow off shall be done with steam which is exhausted through adequately sized, open ended temporary piping. Temporary piping and motor operated valves shall be installed for steam blowing operation. Piping shall be warmed before release of steam by quick opening of motor operated valve located on temporary piping. The cycle shall be repeated until steam from the blow out pipe is determined to be clean. If erected already flow nozzles and control valves etc. shall be removed and replaced by spool pieces before steam blowing. The removed flow nozzle and control valves etc. shall be put back after steam blowing. Installation of thermo wells prior to steam blowing shall be as per recommendations of respective thermo well supplier or employer. The motor operated valves used for steam blowing shall have special characteristics like minimum loss of pressure, resistance to wear during grave working conditions (high velocity

and carryover of water and solid particles), quick opening time, minimum effort on electric actuator etc.

14.09.00 The steam blowing termination criteria will be :

(i)	Acceptable target plate condition
(ii)	Measured D.F. (disturbance factor) as specified in commissioning / Pre-commissioning chapter of this technical specification or as mutually agreed during detail engineering *for Critical Piping System (i.e. Main Steam, Hot Reheat, Cold Reheat, and HP & LP Bypass system piping systems in bidder's scope).*
(iii)	For piping system other than *Main Steam, Hot Reheat, Cold Reheat, and HP & LP Bypass system piping. The acceptance criteria will be decided during detail engineering based on the proven practice of Turbine / Equipment OEM.*

15.00.00 SPECIFICATION FOR FLASH TANKS

15.01.00 The flash tanks and accessories shall be designed, manufactured and tested in accordance with ASME Boiler and pressure vessels (B&PV) codes (latest) and other applicable ANSI standards referenced in the above codes.

15.02.00 **Number and Sizing**

Flash tanks shall be provided into which all recoverable drains from turbine casing, extraction lines, valves, strainers, main steam, CRH and HRH line drains, cascaded drains from heaters etc. shall be led. Number of flash tanks shall as per tender drg. Requirement /details of various flash tanks are given below :

a High pressure (HP) flash tank for accommodating high pressure (above and including hot reheat design pressure) steam drains and HP heater emergency drains, as indicated in the tender drawing.

b Low pressure (LP) flash tank for accommodating low pressure (below hot reheat design pressure) steam drains and LP heater emergency drains as indicated in the tender drawing.

c Atmospheric flash tank to accommodate alternate drains of steam lines, feed water safety valve discharge and aux. steam line drains, as indicated in the tender drawing.

d In lieu of the HP & LP flash tanks mentioned above at a) & b) above, bidder may also offer flash boxes attached to condenser, if it is a standard & proven practice of the bidder. However, number of flash boxes shall be as indicated in the tender P&ID.

15.03.00 **Constructional Features**

a Flash tanks shall be vertical, cylindrical design and of welded construction with tori spherical or hemispherical heads.

b Drain/hot water inlet nozzles shall be tangential to the vessel periphery. Suitable vortex breaker arrangement shall be made at the liquid outlet to the vessel. In case the contractor finds better alternate arrangement, the same can be submitted for the Employer acceptance & approval.

c The drain and vent of the flash tanks shall be adequately sized and lead to the condenser. There shall not be any valve on the drain and vent lines. Loop seal shall be provided on drain if required.

d A manhole shall be provided on the flash tanks for inspection purpose. It shall be of diameter 500 mm minimum. The manhole shall be of devit type and shall be provided with grip.

e The flash tanks shall be located on the ground/mezzanine floor of the powerhouse. Necessary structural supports including anchor bolts shall be provided. Three (3) support

CLAUSE NO.	TECHNICAL REQUIREMENTS

legs at 120 degree spacing shall be provided on each flash tank. Necessary lifting lugs for handling by the TG hall EOT crane shall be provided.

f The flash tanks shall be provided with a full length level indicating gauge glass complete with protective rods, isolation valves and drains. Temperature indicators and temperature switches shall be provided on the flash tanks.

g The flash tanks shall be provided with access ladders, if required for access to the instruments, valves, main holes etc.

15.04.00 **Schedule of Materials**

Shell and Head	ASTM A 285 Gr.C
Wear Plate/Baffle	ASTM A 285 Gr.C
Nozzle Neck	ASTM A 106 Gr.B
Manhole nozzle flange and cover	ASTM A 285 Gr.C
Couplings	ASTM A 105
Bolts and studs	ASTM A 193 Gr. B7
Nuts	ASTM A 194 Gr. 2 H
Gaskets	Spiral wound SS 316 with graphite

However the material as per ASTM A516 Gr. 60 or IS 2062 Gr. B shall also be acceptable subject to the relevant codes / standards permitting so for the design parameters of various flash tanks.

16.00.00 SPECIFICATION FOR METALLIC EXPANSION JOINTS

16.01.00 The expansion joints shall be of metallic multi-bellows construction and shall be used to reduce the reactions (forces and moments) at the connected equipment terminals due to thermal expansion/connection and/or vibration of connected equipment and piping.

16.02.00 The design, material, construction, manufacture, inspection, testing and performance of the expansion joints shall comply with the currently applicable requirement of EJMA, Boiler and Pressure Vessel Code Section III, ANSI B-31.1 and all statutes, regulations and safety codes.

16.03.00 **Construction Details**

(a) **Bellows**

i The bellow shall be hydraulically or roll formed from perfect cylinders of single ply / multi ply, 304 grade stainless steel.

ii The number of longitudinal weld seams shall be minimum and there shall be no circumferential weld seam.

iii Cold formed stainless steel bellows shall not be heat treated.

iv All bellow elements shall be pickled after forming.

v Equalizing rings, where required, shall be either from high quality castings of from fabricated metal.

vi Flanged expansion joints shall be provided with adequate pipe stubs.

CLAUSE NO.	TECHNICAL REQUIREMENTS
	vii Butt welded expansion joints shall have adequate length of pipe so that site welding does not impair or reduce the joints efficiency. **(b) Sleeves** i Expansion joints will be furnished with internal sleeves of the same material as the bellows and installed with sufficient clearance to allow full rated deflection. The sleeves shall be welded on the flow inlet end of the joint only. Ii Bellow shall have external sleeves with an arrow indicating the direction of flow on the outside. The external steel covers provided to protect bellows from physical damages, shall be suitable for supporting insulation where necessary and shall be detachable. **(c) Tie Bars** I Joints shall be shipped at neutral length. They shall be provided with suitable erection and knock-off type temporary tie bars to prevent damage and misalignment during transit and also with permanent tie bars along with necessary nuts, bolts etc. Ii The rods on pressure balanced type expansion joints shall be adequately sized to prevent buckling in vacuum services or services with other external loads.
16.04.00	**Type test of Metallic Expansion joints** Following tests (Type tests) shall be carried out for metallic expansion joints as per the procedures given in EJMA. a) Life Cycle Test b) Meridional yield-rupture testing c) Squirm testing
16.04.01	For the purpose of carrying out type tests; metallic bellows shall be grouped based on the parameters as given below. The bellows conforming to same combination of these parameters shall constitute one group. Type test shall be carried out on one or more bellows (as required) for the successful completion of all the type tests specified above.
i.	**Material of bellow**: Based on material of bellow, bellows shall be categorized into three category namely Carbon steel, stainless steel (E.g. SS304, 316, 321etc.) & High alloy steel (E.g. Inconel).
ii.	**Profile of convolutions**: Each profile shall be considered as separate category (e.g. U profile, V profile & Lyra profile etc.).
iii.	**Dimension of bellows:** Based on the size, the categories shall be as under: ▪ Nominal diameter of metallic expansion joint up to and including 800mm NB. ▪ Nominal diameter of metallic expansion joint greater than 800mm NB up to & including 1600 NB. ▪ Nominal diameter of metallic expansion joint greater than 1600mm NB up to & including 2400 NB. ▪ Each size above 2400mm NB shall be a separate category.
iv.	**Design pressure:** Based on the design pressure, bellows shall be categorized as under: ▪ Design pressure from full vacuum up to 5 kg / sq.cm (g).

CLAUSE NO.	TECHNICAL REQUIREMENTS
	▪ Design pressure above 5 kg / sq.cm (g) and up to 10 kg / sq.cm (g) with or without vacuum.
16.04.02	**Number of cycles** For the life cycle test, the number of test cycles shall be minimum 10,000 cycles. Other tests for metallic expansion joints shall be carried out as per the approved QP / QA Section. Further, other terms and conditions for type test shall be as specified elsewhere in the specification.
17.00.00	**TESTING REQUIREMENTS:** The detailed testing requirements for power cycle piping and its components are given in the subsection for quality assurance(QA) .the requirements pertaining to testing given in this subsection if in variance with that given in QA subsection, then the more stringent of the two shall be followed.
18.00.00	**PAINTING** Specification for surface preparation/primer/ painting shall be as per Subsection A-7 (surface preparation & painting).

LOW PRESSURE PIPING

KHURJA SUPER THERMAL POWER PROJECT (2X660 MW) TURBINE GENERATOR AND ASSOCIATED PACKAGES BID DOC. NO.: THDC/RKSH/CC-9915-371	SEPARATOR

CLAUSE NO.	SCOPE OF SUPPLY & SERVICES
1.00.00	**LOW PRESSURE PIPING**
1.01.00	The Scope of Low Pressure (LP) piping systems for the following services shall be as defined in various tender drawings & the sub section pertaining to "Terminal points and exclusions" and shall include the following systems: (a.) Circulating water piping (non encased portion). (b.) DM water normal make-up piping (condenser makeup, ECW makeup for ECW tanks, make up to CPU regeneration plant, make up to condensate storage tank etc..) (c.) DM Emergency make up piping (emergency make up to condenser, ECW tanks emergency make-up and condensate storage & transfer system. (d.) Boiler (Steam Generator) and Deaerator fill piping. (e.) Equipment Cooling Water (ECW) piping including its chemical dosing system for primary circuit. (f.) Auxiliary cooling water piping. (g.) HVAC make-up piping (h.) Service water piping. (i.) Instrument Air piping. (j.) Service (plant) Air piping (k.) Potable water system (including tank). (l.) TG sump pit discharge, CW pit discharge and Atmospheric drain Vessel discharge piping. (m.) Drain & vent piping, recirculation piping , Valves, breakdown orifices wherever required and any other piping system required to make the Low Pressure (LP) piping systems in the bidder's scope complete (n.) Tanks as described elsewhere in the specification for the above systems. (Including condensate storage tanks etc.).
1.02.00	The scope covers the following for the complete LP piping systems mentioned above: a) Design, engineering, manufacturing, supply, fabrication , testing packaging, transportation to site, storage, taking delivery of Employer

supplied equipment from site stores, in plant transportation, erection, cleaning, testing and commissioning of all items i.e., piping fittings, supports/ hangers, valves, actuators, motors, specialities, tanks, chemical dosing system for Equipment Cooling Water System, instruments, drains, vent including drain/ vent valves, air release valves (if applicable) etc.

The items though not specifically mentioned or indicated here in but are needed to make the system / equipment complete shall also be furnished and treated as if included in the specification unless otherwise specifically excluded.

b) Surface preparation, priming and painting of all non-insulated above ground piping and equipment except galvanized steel piping & surfaces , stainless steel piping & surfaces and gun metal surfaces.

Paints and varnishes, primers, thinners etc. as required for anti-corrosive protection of piping & equipment above ground.

c) Bidder shall provide anti-corrosive protection (coating & wrapping or anticorrosive tape) on the external surfaces of pipes to all directly buried piping including galvanized carbon steel piping.

On the internal surface of all pipes 1000 mm and above, a coat of primer followed by a hot coat of coal tar enamel paint or coal tar epoxy paint shall be applied.

Bidder's scope of supply/ work shall include but not be limited to items such as, Pipes, headers and manifolds, bends, elbows, returns, tees, laterals, crosses, reducers/ expanders, caps and closures, couplings, plugs, sleeves, and saddles, stubs and bosses, unions and other similar fittings, flanges, gaskets, fasteners and sealants, ring joints, backing rings, all types of valves including drain/ vent/ air release valves, 3-way valves(where applicable) with test connection for instruments/ manifolds etc.actuators, specialties, orifices, flow nozzles, etc. as per finalized single line flow diagrams and layout drawings/ isometric drawings.

Bidder’s scope shall also cover distribution of service air , service water and potable water to various facilities/buildings (under contractor scope)

CLAUSE NO.	SCOPE OF SUPPLY & SERVICES
	including providing tap offs at various floors of TG building.
1.03.00	The scope also covers the following:
	a) Complete assemblies of hangers, secondary supports (channels/angles etc. taking support from main beam) , anchor, guides, restraints, etc. including welded attachments, clamps, devices tie-rods, turn-buckles, springs and spring cages, shoes, rollers, trapezes etc.
	b) Weather hoods for pipes crossing ceilings and walls.
	c) Instrument tapping and stub connections, root valves, 3-way valves (where applicable) with test connections, drains and vent valves & expanders / reducers as required and instruments as indicated else where for instruments supplied by the Contractor..
	d) Drain funnels, drip pans, moisture traps etc. where ever required shall be provided.
	e) Instrument tapping, stub connections, root valves and instrument tubing up to root valves for instruments supplied by the Employer for onward connections by the Employer. Contractor shall furnish the list of all such tapping with their X, Y, Z co-ordinates.
	f) All supporting attachments like plates, saddles, stools, shoes, base plate, saddle plates, angles, channels, I-beams, trapeze, cantilevers, brackets, sways, braces, nuts, bolts, cleats, clamps, needed to complete the erection of piping system covered under this specification. Anchor bolts, bed & foundation plates, pipe sleeves and Nuts to be embedded in concrete for piping where ever indicated in the drawing. All grouting and chipping work (including supply of cement, sand and stone chips) for equipment foundations, pipe supporting etc. Reinforced concrete valve chambers wherever required for underground piping.
	g) Excavation, preparation of bed, backfilling with compaction of soil and removal of extra-earth to designated places in case of pipes to be buried.

CLAUSE NO.	SCOPE OF SUPPLY & SERVICES

h) Bidder shall also design, supply, fabricate, erect, set and commission all hangers, tie-rods, turn-buckles, supports, guides, restraints, anchors, etc. as required for the, piping system. This includes the provision of all associated steel work including brackets, cradle supports, duck foots, channels, angles, etc. It is Bidder's responsibility to estimate these requirements and include them in their offer price. Whenever, straight run of the yard pipes are more than 300 meters, flexibility analysis shall be conducted by the contractor to identify the requirement of loops, type of supports etc.

.i) In covered concrete trenches bidder shall supply necessary supporting materials such as stools, saddles, base plates, clamps, U-bolts, angles, clips etc.

j) Bidder shall supply all necessary drains and vents with drain & vent valves including anti-flash funnels and moisture traps for compressed air system as required for the safe and effective draining-venting of the piping systems based on the approved flow scheme / single line diagram. It is bidder's responsibility to identify the requirements of drains, vents, and supply the necessary pipe work, fittings, hangers and supports etc. for the same.

k) Bidder shall supply and install necessary matching pieces as may be needed for connection of piping systems with equipment terminals, valves and specialties.

l) Bidder shall erect all instrument impulse piping and fittings from the tap-off point of the last root valve including the root valve and instruments.

m) Bidder shall perform necessary internal machining of pipe for installing orifices, flow nozzles, straightening vanes etc.

n) The Bidder shall prepare the flow diagrams, detailed dimensional piping layout/ Isometric/ fabrication/ As built drawings of all the systems along with Cross sectional drawings, showing all supports and equipment as required.

CLAUSE NO.	SCOPE OF SUPPLY & SERVICES
	o) In addition to submission of drawings as stipulated above bidder shall also furnish the data/ documents with respect to following: 1) Thickness calculation of CW duct/large diameter buried pipes as per AWWA-M-11. p) Bidder's scope of supply for fabrication, erection, cleaning, testing and commissioning of the piping systems installed by him shall include the following:- All welding consumables like welding electrodes, filler rods and wires; gases like oxygen, acetylenes, argon, carbon-dioxide, propane, backing rings etc. Films for radiographic examination of welds. X-ray and Gamma -ray equipment including isotopes, dye penetrants, and other required non-destructive testing materials and equipment (all to be taken back by the Bidder after completion of work). All heating and stress relieving equipment, thermocouples asbestos blankets, cables, temperature recorders, charts heat sensitive chalks and crayons etc. (All to be taken back by bidder after completion of work). All machinery, equipment tools and tackles as required for transportation handling, fabrication and erection (All to be taken back by Bidder after completion of work). All equipment/ materials as required for cleaning, flushing, blowing out and hydro testing of the piping systems; these shall include but not be limited to pumps and compressors with prime movers, instruments, pipe work with supports, valves, strainers and other specialities, blanks, plugs, spool pieces, dummy plates, electrical accessories, etc. (All to be taken back by Bidder after completion of work). All scaffolding materials and false work (To be taken back by Bidder after completion of work).
1.04.00	The contractor shall provide Services of erection superintendent and foremen, fitters and riggers, welders, transport and crane operators and other skilled and unskilled labour.

CLAUSE NO.	SCOPE OF SUPPLY & SERVICES

The design engineering and providing all temporary pipe work as required for erection, cleaning, flushing, blowing out, testing and commissioning of the piping system is the responsibility of the Bidder.

The Bidder's scope shall include design, supply of required structural steel (except those which are specifically excluded), their fabrication and erection where ever required.

The Bidder shall include in his offer a complete set of special tools and tackles required for handling the various equipment / piping system during maintenance.

Bidder scope of services shall include the following also.

i) Obtaining approval from Chief Inspector of Boiler as per Indian Boiler Regulation, (IBR - 1950) for design/ fabrication/ erection / testing of piping / fittings / valves and specialties coming under the purview of IBR, if any.

ii) The bidder shall also identify and satisfy all other statutory code requirement as may be necessary for the piping systems covered in this specification.

iii) Certified copies of test reports for all tests and examinations specified in the specification shall be furnished to the Project Manager. Cost of meeting all statutory requirements and furnishing the required certificates shall be deemed included in the proposal price.

LOW PRESSURE PIPING

1.00.00 **EQUIPMENT SIZING CRITERIA**

1.01.00 All the piping systems and equipment supplied under this package shall be designed to operate without replacement and with normal maintenance for a plant service life of 30 years, and shall withstand the operating parameter fluctuations and cycling which can be normally expected during this period.

1.02.00 For all Low Pressure piping systems covered under this specification, sizing and system design shall be to the requirements of relevant codes and standard indicated. In addition to this, requirements of any statutory code as applicable shall also be taken into consideration.

1.03.00 Inside diameters of piping shall be calculated for the flow requirements of various systems. The velocities for calculating the inside diameters shall be limited to the following:

a) **Water Application**

	Pipe Size	Water Velocity in m/sec Below 50 mm	50-150 mm	200 mm & above
(a)	Pump suction	------	1.2-1.5	1.2-1.8
(b)	Pump discharge and recirculation	1.2-1.8	1.8-2.4	2.1-2.5
(c)	Header	------	1.5-2.4	2.1-2.4

Pipe line under gravity flow shall be restricted to a flow velocity of 1 m/sec generally. Channels under gravity flow shall be sized for a maximum flow velocity of 0.6 m/sec.

WILLIAM & HAZEN formula shall be used for calculating the friction loss in piping systems with the following "C" value:

(i)	Carbon steel pipe	100
(ii)	Ductile Iron.	140
(iii)	Rubber lined steel pipe	120
(iv)	Stainless steel pipe	100

For calculating the required pump head for pump selection, at least 10% margin shall be taken over the pipe friction losses and static head shall be calculated from the minimum water level of the tank/ sump/ reservoir from which the pumps draw water.

(b) **Compressed Air Application**

Compressed air 15.0 m/sec.(under Average Pressure & Temp. conditions)

1.04.00 The pipes shall be sized for the worst (i.e. maximum flow, temp. and pressure values) operating conditions.

1.05.00 Based on the inside dia. so established, thickness calculation shall be made as per ANSI B 31.1 OD and thickness of pipes shall than be selected as per ANSI B 36.10/IS-1239 Heavy grade/IS-3589/ASTM-A-53/API-5L/ANSI B 36.19 as the case may be.

1.06.00 Corrosion allowance of 1.6 mm will be added to the calculated thickness being considered (except stainless steel piping).

1.07.00 Bend thinning allowance/manufacturing allowance etc. shall be as per the requirement of the design code provision.

1.08.00 High points in piping system shall be provided with vents along with valves as per the system requirement. Low points shall be provided with drains along with drain valves as per the system requirement. Drain lines shall be adequately sized so as to clear condensate in the lines. Material for drain and vent lines shall be compatible with that of the parent pipe material.

1.09.00 Material of construction for pipes carrying various fluids shall be as specified elsewhere.

1.10.00 Compressed air pipe work shall be adequately drained to prevent internal moisture accumulation and moisture traps shall be provided at strategic locations in the piping systems.

1.11.00 Depending upon the size and system pressure, joints in compressed air pipe work shall be screwed or flanged. The flange shall be welded with the parent pipe at shop and shall be hot dip galvanized before dispatch to site. Alternatively, the flanges on GI pipes may be screwed-on flanges also.

1.12.00 Threaded joints shall be provided with Teflon sealant tapes.

1.13.00 Following types of valves shall be used for the system/service indicated.

SYSTEM	**TYPES OF VALVES**					
	Butterfly	Gate	Globe	Check	Ball	Plug
Water	x	x	x	x	x	
Air		x	x	x	x	
Drains & vents		x	x	x		
Fuel oil (if any)		x	x	x	x	x

1.14.0 Recirculation pipes along with valves, breakdown orifices etc. shall be provided for important pumping systems as indicated in respective process and instrumentation diagrams (P&IDs). The recirculation pipe shall be sized for minimum 30%design flow of single pump operation or the recommended flow of the pump manufacturer whichever is higher.

2.00.00	**TECHNICAL SPECIFICATION**
2.01.00	**GENERAL** Specific technical requirements of low-pressure piping, fittings, supports, valves, specialties and tanks etc. have been covered under this Sub-section. It includes details pertaining to design and material of construction for piping, fittings, valves, equipment, etc. cleaning/surface preparation application of primer and painting on over ground piping. It also includes detailed technical requirement of laying underground/buried piping including water proofing/anti corrosive protection. It also covers design, engineering, manufacturing, fabrication, technical details of piping, valves, specialties, piping hangers / supports, tanks etc.
2.02.00	**Pipes and fittings**
2.02.01	All low pressure piping systems shall be capable of withstanding the maximum pressure in the corresponding lines at the relevant temperatures. However, the minimum thickness as specified in the following clauses and or respective codes for pipes and fittings shall be adhered to. The bidder shall furnish the pipe sizing/ thickness calculation as per the criteria mentioned above under LP piping equipment sizing criteria of this Technical Specification.
2.02.02	Piping and fittings coming under the purview of IBR shall be designed satisfying the requirements of IBR as a minimum.
2.02.03	Supporting arrangement of piping systems shall be properly designed for systems where hydraulic shocks and pressure surges may arise in the system during operation. Bidder should provide necessary protective arrangement like anchor blocks/anchor bolt etc. for the safeguard of the piping systems under above mentioned conditions. The requirement will be, however, worked out by the contractor and he will submit the detailed drawings for thrust/anchor block to the Employer. External, and internal, attachments to piping shall be designed so as not to cause flattening of pipes and excessive localized bending stresses.
2.02.04	Bends, loops, off sets, expansion or flexible joints shall be used as required in order to prevent overstressing the piping system and to provide adequate flexibility. Flexibility analysis (using software packages such as Caesar-II etc.) shall be carried out for sufficiently long piping (straight run more than 300M).
2.02.05	Wherever Bidder's piping coming under this specification, terminates at an equipments or terminal point not included in this specification, the reaction and the thermal movement imposed by bidder's piping on equipment terminal point shall be within limits to be approved by the Employer.
2.02.06	The hot lines shall be supported with flexible connections to permit axial and lateral movements. Flexibility analysis shall be carried out for pipelines which have considerable straight run as indicated above and necessary loops/ expansion joint etc. shall be provided as may be necessary depending on layout.
2.02.07	Piping and fittings shall be manufactured by an approved manufacturer of repute. They should be truly cylindrical of clear internal diameter, of uniform thickness, smooth and strong, free from dents, cracks and holes and other defects.
2.02.08	For rubber lined ERW pipes, beads shall be removed for pipe size 80 NB and above.
2.02.09	Inspection holes shall be provided at suitable locations for pipes 800 Nb and above as required for periodic observations and inspection purposes.

2.02.10 At all intersection joints, it is Contractor's responsibility to design and provide suitable reinforcements as per the applicable codes and standards.

2.02.11 For large size pipes/ducts, at high point and bends/change of direction of flow, air release valves shall be provided as dictated by the system requirement and operation philosophy & tripping conditions of pumping system. Sizing criteria for air release valves shall be generally on the basis of valve size to pipe diameter ratio of 1:8. Requirement shall be decided as per relevant code.

Transient analysis /surge analysis where ever specified and required shall be conducted in order to determine the location , number and size of the Air-Release valve on certain long distance/high volume piping systems, if applicable within the scope of work of the package.

2.03.00 **Material**

2.03.01 Alternate materials offered by Bidder against those specified. shall either be equal to or superior to those specified, The responsibility for establishing equality or superiority of the alternate materials offered rests entirely with the Bidder and any standard code required for establishing the same shall be in English language.

2.03.02 No extra credit would be given to offers containing materials superior to those specified. Likewise no extra credit would be given to offers containing pipe thickness more than specified.

2.03.03 All materials shall be new and procured directly from the manufacturers. Materials procured from traders or stockists are not acceptable.

2.03.04 All materials shall be certified by proper material test certificates. All material test certificates shall carry proper heat number or other acceptable references to enable identification of the certificate that certifies the material.

2.03.05 Material of construction for pipes carrying various fluids shall be as follows:

Sl No	Type of Fluid	Material
1.	i) Ordinary Water (Raw Water, Clarified Water, etc.) ii) Equipment cooling water including Both primary & secondary circuit (DMCW pH-corrected & ACW drain water)	IS-2062 Gr.-E-250B/ASTM A-36/ASTM A-53 type 'E'Gr.B/IS-3589 Gr. 410 /IS-1239 Heavy.
2.	i) Demineralised water, ii)Alkaline solution (ECW system chemical dosing)	Stainless Steel to ASTM A312, Gr. 304 welded for sizes 65 mm NB and above. Stainless steel to ASTM A312, Gr. 304 sch.40s seamless for sizes 50mm and below
3.	i) Drinking (potable) water ii)Compressed air (Instrument & service air)	ASTM A-53 type E Gr. B galvanized/ IS 1239 Gr heavy galvanized/IS 3589 Gr 410 galvanized. Galvanized shall be to IS- 4736 or equivalent.
4.	(Condensate) spill water	ASTM A 106 Gr. B
5.	Effluents from Neutralization pit	MSRL

2.03.06	In water lines, pipes upto 150mm Nb shall conform to ANSI B36.10/ASTM-A-53, Type-E Gr.B /IS:1239 Gr. Heavy and minimum selected thickness shall not be less than IS:1239 Grade Heavy except for demineralised water, drinking water and condensate spill lines.
2.03.07	Pipes of above 150mm Nb shall be to AWWA-C200/ANSI B 36.10/ASTM A-53/IS 3589 Gr.410. Pipe to be fabricated by the bidder shall be rolled and butt welded from plates conforming to ASTM A-53 type 'E' Gr. B/IS 2062 Gr.E-250B/ASTM-A-36. However, larger pipes, i.e. 1000mm Nb and above shall be made from plates conforming to ASTM A 36/IS 2062 Gr.E-250B and shall meet the requirements of AWWA-M-11 (for deflection & buckling criteria considering water filled pipe as well as vacuum condition that may prevail during transient/surge conditions, truck-load, rail-load and weight density for compacted soil or any other load as the case may be).
2.03.08	In demineralised water service, the pipes upto 50 Nb shall be of stainless steel ASTM A 312, Gr. 304 sch. 40 Seamless. The size for these pipes shall be to ANSI B 36.19. These shall be socket welded. The material for pipe from 65mm NB upto and including 400 NB shall be to ASTM A 312, Gr. 304 (welded). In no case the thickness of fittings shall be less than parent pipe thickness. Bidder/Contractor shall note that pipes offered as per a particular code shall conform to that code in all respects i.e. Dimension, tolerances, manufacturing methods, material, heat treatment, testing requirements, etc. unless otherwise mentioned elsewhere in the specification.
2.03.09	Instrument air, Plant (service) air lines and Drinking water lines shall be to ASTM A 53 type E grade B/ANSI B 36. 10/IS 3589, Gr. 410 / IS: 1239 Heavy (in case thickness calculated is more than gr. Heavy, ANSI B 36.10 Schedule numbers shall be followed) and galvanized to IS 4736 or any equivalent internationally reputed standard. The material of the pipes shall be to ASTM A 53 type 'E' Gr. B / IS: 3589, Gr. 410 / IS: 1239 Gr. Heavy. The fittings shall be of either same as parent material or malleable iron to IS-1879 (galvanized).
2.03.10	Spiral welded pipes as per API-5L/IS-3589 are also acceptable for pipe of size above 150 NB. However minimum thickness of the pipes shall be as elaborated in above clauses.
2.03.11	Condensate lines shall be to ASTM A 106 Gr. B and dimension to ANSI B 36.10 schedule "standard" as minimum to be maintained.
2.03.12	If carbon steel plates of thickness more than 12 mm are used for manufacture of pipes, fittings and other appurtenances, then the same shall be control-cooled or normalized as the case may be following the guidelines of the governing code.
2.04.00	**Field routed pipes:**
2.04.01	Pipe lines of NB 50 size and below are regarded as field run piping. It is Bidder's responsibility to plan suitable layouts for these system insitu. Bidder shall prepare drawings indicating the layout of field run pipe work. These drawings shall be approved by Project Manager to the installation of the field run pipe work. Based on these approved layouts the Bidder shall prepare the BOQ of field run-pipes and submit to Employer for approval.
2.05.00	**Slope/Drains and Vents**
2.05.01	Suitable slope shall be provided for all pipelines towards drain points. It is Bidder responsibility to identify the requirements of drains and vents, and supply the necessary pipe work, valves, fittings, hangers and supports etc. As per the system requirement low points in the pipelines shall be provided with suitable draining arrangement and high points shall be provided with vent connections where air or gas pockets may occur. Vent for use during hydrostatic test shall be plugged after the completion of the test. Vent shall not be less than 15mm size. Drains shall be provided at low points and at pockets in piping such that complete drainage of all systems is possible. Drain shall not be less than 15mm for line size

up to 150mm, not less than 20mm up to 300mm and not less than 25mm for 350mm to 600mm pipes and not less than 50mm for 600mm and above pipes.

2.05.02 Air piping shall be sloped so that any part of the system can be drained through the shut-off drain valve or drain plugs.

2.06.00 **Pipe Joints**

In general all water lines 65mm NB and above, are to be joined generally by butt welding except the locations where valves/fittings are to be installed with flanged connections and 50mm and below by socket welding unless mentioned otherwise specifically. All air lines shall be of screwed connection and rubber lined pipes of flanged connections.

2.06.01 **Screwed Joints**

(a) Threading of pipes shall be carried out after bending, heat treatment etc. If not possible, threading may be done prior to these operations but proper care should be taken to protect them from damage. Threads shall be to ANSI B 2.1 (taper) NPT/ ANSI B1.20.1 (taper) NPT / IS: 554 unless specified otherwise.

(b) Galvanized pipe shall generally be joined by screwing into sockets. The exposed threaded portion on the outside of the pipes shall be given a zinc silicate coating. Galvanized pipes shall not be field joined by welding for protection of Galvanising Zinc layer. Screwed ends of GI pipes shall be thoroughly cleaned and painted with a mixture of red and white lead before jointing. For galvanized pipe sizes above 150 mm NB, screw & socket jointing as per ASTM-A-865 shall be employed for both pipe-to-pipe and pipe-to-fitting jointing. For pipe to fitting connection since no direct threading can be done on the fittings (supplied as per ASTM-A-234 Gr. WPB and ANSI B-16.9) necessary straight pipe lengths acting as match pieces shall be welded to the fitting at both ends and subsequently the free ends of the straight lengths shall be threaded as per ASTM A-865 for jointing with main pipe. Once welding of fittings with match pieces and threading of free ends of match pieces are over, the entire fabricated piece shall be galvanized, or in case match pipes and fittings are already galvanized before the above mentioned fabrication then suitable application of Zinc-Silicate paste adequately at the welded surface (both in side & out side) after welding with zinc rich electrode, along with the nascent threaded metal portions at both free ends given the same application of Zinc Silicate paste. Alternatively flanged jointing may be employed for pipe sizes 100 NB and above. However, the bidder shall ensure the galvanized pipe joints do not fail during hydro test.

(c) Teflon tapes shall be used to seal out screwed joints and shall be applied to the male threads only. Threaded parts shall be wiped clean of oil or grease with appropriate solvent if necessary and allowing proper time for drying before applying the sealant. Pipe ends shall be reamed and all chips shall be removed. Screwed flanges shall be attached by screwing the pipe through the flange and the pipe and flange shall be refaced accurately.

(d) For pipe sizes from 350 mm NB to 550 mm NB (including 350 NB & 550 NB) the GI pipes shall be of flanged connection. However, the pipes after welding of flanges shall be completely galvanized. Any site welding done on galvanized pipes shall be done with zinc-rich special electrodes and the welded surfaces whether inside or outside shall be coated with zinc-silicate paste. Seal welding of flanges with zinc-rich electrode will be permitted only when any flange is leak-prone during hydro testing.

(e) For pipe sizes 600 mm NB and above, the GI pipes shall be of welded connection (with zinc-rich special electrodes) followed by application of zinc silicate coating at welded surfaces both inside and outside the pipe, except for the last blank/blind flange, or, equipment connection where application of zinc-silicate paste after welding cannot be done due to inaccessibility of the inside welded surface and where

	galvanic protection has been impaired due to welding of pipe-to-pipe joint. Thus the last erection joint shall be flanged joint.
2.06.02	**Welded Joints**
	(a) For making up welded joints (butt weld or socket weld) the welding shall be performed by manual shielded metal arc process in accordance with the requirements specified elsewhere in the spec. Any welder employed for carrying butt welding shall be qualified as per ASME section IX for the type of joints he is going to weld. Jointing by butt weld, or socket weld shall depend upon the respective piping material specifications.
2.06.03	**Flanged Joints**
	(a) Flanged connections for pipes are to be kept to the minimum and used only for connections to vessel, equipments, flanged valves and other fittings like strainer/traps/orifices etc. for ease of connection and maintenance etc. Rubber lined pipes shall be flange joined only.
	(b) All flanged valves intended for installation on steel piping system, shall have their flanges drilled to ANSI B 16.5 (or equivalent) and according to the pressure class stated in their respective piping material specification.
	(c) Drilling on flanges of flanged valves must correspond to the drilling of flanges on the piping system on which the valves are installed.
2.07.00	**Bends/elbows/mitre bends/ Tees/ Reducers & other fittings**
2.07.01	For pipe fittings such as elbows (long radius), reducers, tees, etc. the material shall be to ASTM-A-234 Gr. WPB/ASTM-105 up to 300 NB. For pipe fittings above 300 NB, the fittings may be fabricated conforming to parent pipe material. Provision of compensation pads shall be kept as per ANSI B 31.1. The fitting shall conform to the dimensional standard of ANSI B-16.9/ 16.11.Further branching in pipes for sizes 65nb and above is also acceptable (ANSI B 31.1). However, for pipes up to 150 NB, pipe fittings may be supplied with material and dimension conforming to IS 1239 in case parent pipes also conform to IS 1239.
2.07.02	For pipe size 350Nb and above mitre bends may be used for all pipes except rubber lined pipes. However, mitre bends are also acceptable for rubber lined pipes above 1200 NB. The bend radius shall be 1½ times the nominal pipe diameter. 90 deg. bends (mitre) shall be in 4 pieces (3 cuts) and 45 deg. mitre bends shall be in 3 pieces 22½ deg. Fabrication of mitre bends shall be as detailed in BS 2633/BS534.
2.07.03	For pipes, above 1200 NB, reducer and tees shall be to dimensional standard of AWWA-C-208.
2.07.04	Stainless steel fittings shall conform to either ASTM-A-182 Gr. 304 or ASTM-A-403 Grade WP. 304 Class-S, for sizes upto and including 50 mm NB, i.e. the fittings shall be of seamless construction. However, for stainless fittings above 50 mm NB, the same shall conform to ASTM-A-403 Gr. WP 304 Class W i.e. the fittings shall be of welded construction strictly in accordance with ASTM-A-403.
2.07.07	In no case, the thickness of fittings shall be less than the thickness of parent pipe, irrespective of material of construction.
2.08.00	**Flanges**
2.08.01	Flanges shall be slip on type or weld neck type. Welding of flanges in tension is not permitted.

2.08.02 All flanges and-flanged drilling shall be to ANSI B 16.5 / BS EN-1092 / AWWA C - 207 of relevant pressure/temperature class. Flanges shall be fabricated from steel plates conforming to ASTM A 105/IS 2062 Gr. E-250B. However stainless steel flanges shall be fabricated from SS plates to ASTM-A-240, Gr. 304 or equivalent.

2.09.00 **Specific technical requirement of laying buried pipe with anti-corrosive treatment**

The pipe in general shall be laid with the top of the pipe minimum 1.0 (one) meter below finished general ground level.

2.09.01 **Trenching**

(a) The trench shall be cut true to the line and level and shall follow the gradient of the pipeline. The width of the trench shall be sufficient to give free working space on each side of the pipe. Trenches shall conform to IS 5822 or any international standard.

2.09.02 **Preparation and cleaning of piping**

(a) The pipeline shall be thoroughly cleaned of all rust, grease, dirt, weld scales and weld burrs etc. moisture or other foreign matter by power cleaning method such as sand or grit blasting, power tool cleaning, etc. Grease or heavy oil shall be removed by washing with a volatile solvent such as gasoline. Certain inaccessible portions of the pipeline (which otherwise not possible to be cleaned by power cleaning methods) may be scrubbed manually with a stiff wire brush and scrapped where necessary with specific permission of the Project Manager.

(b) On the internal surface for pipes 1000 Nb and above, a coat of primer followed by a hot coal-tar enamel or coal tar epoxy painting (cold) shall be applied.

2.09.03 **Coating and wrapping/ Anti corrosive Protection Coal tar tape**

a. Buried piping shall be coated and wrapped, as per specification, after completion of welded and/or flanged connections, and after completion and approval of Hydro testing. Materials to be used for coating and wrapping of underground pipelines are:

(1) Coating primer (coal tar primer)

(2) Coating enamel (coal tar enamel)

(3) Wrapping materials.

All primer/coating/wrapping materials and methods of application shall conform to IS: 10221 except asphalt/bitumen material. Materials (primer/coating/wrapping) as per AWWA-C-203 are also acceptable.

Protective coating shall consist of coal tar primer, coal tar enamel coating, glass fiber, tissue inner wrap followed by glass fiber or coal tar impregnated Kraft outer wrap or finish coat.
Number of coats and wraps, minimum thickness for each layer of application shall be as per IS-10221. Number of. Coats and wraps shall be decided based on soil corrosivity/resistivity as indicated in IS-10221. Soil data-for this purpose shall be made available.

Total thickness of completed coating and wrapping shall not be less than 4.0 mm.

	b. Alternatively, the anti-corrosive protection for buried pipes can consist of anti-corrosive protection Coal-tar tapes. Material and application of tapes shall conform to IS 15337 or equivalent. These-tapes shall be applied hot over the cold coal tar primer in steps of 2mm thickness so as to cover the spiral edges of the first tape by the application of second tape. The total thickness of the finished protective coating shall be 4.0 mm minimum.
2.09.04	**Trench bed preparation and back filling** Prior to lowering and laying pipe in any excavated trench, the bottom of the trench may require to be back filled and compacted (or as the case may be) to provide an acceptable bed for placing the pipe. Bed preparation in general shall be as per IS: 5822.
2.09.05	**Laying of galvanized steel (GI) pipes** All the joints shall be screwed with socket or flanged. Screwed ends of GI pipes shall be thoroughly cleaned and painted with a mixture of red and white lead before jointing Threaded portion on either side of the socket joint shall be applied with Zinc silicate paste. All the provisions for trenching' bed preparation' laying the pipe application of primer' coating' wrapping with tapes and back filling etc. as indicated for "laying of buried piping" and " anti corrosive protection for buried piping" are applicable for buried galvanized steel (GI) pipes also.
2.10.00	**Cleaning and flushing**
2.10.01	All piping shall be cleaned by the Bidder before and after erection to remove grease, dirt, dust, scale and welding slag.
2.10.02	Before erection all pipe work, assemblies, sub-assemblies, fittings, and components, etc. shall be thoroughly cleaned internally and externally by blast cleaning or by power driven wire brushes and followed by air-blowing . However for pipe sizes below 100nb the pipes may be cleaned internally by compressed air blowing as an alternative to internal blast cleaning. The brushes shall be of the same or similar material as the metal being cleaned. Cleaning of Galvanized pipes shall be done by air blowing only.
2.10.03	After erection, all water lines shall be mass flushed with water. The cleaning velocities in water lines shall be 1.2-1.5 times the operating velocities in the pipelines.
2.10.04	All compressed air pipe work shall be cleaned by blowing compressed air.
2.11.00	**Specification for hangers and supports**
2.11.01	All supports and parts shall conform to the requirement of power piping code ANSI B 31.1 or approved equivalent.
2.11.02	The maximum spans of the supports of straight length shall not exceed the recommended values indicated in ANSI B 31.1.
2.11.03	At all sliding surfaces of supports suitable arrangement is to be provided to minimize sliding friction.
2.12.00	**Design/Construction/Material Particulars of Gate/ Globe /Check /Butterfly / Ball / Air release /Float valves / Moisture Traps.**
2.12.01	**GENERAL**

(a) All valves shall have indicators or direction clearly marked on the hand-wheel so that the valves opening/closing can be readily determined.

(b) Special attention shall be given to operating mechanism for large size valves with a view to obtaining quick and easy operation ensuring that a minimum of maintenance is required.

(c) The valves coming in vacuum lines shall be of extended gland type and/or water sealed.

(d) The actuator-operated valves shall be designed on the basis of the following:

(1) The internal parts shall be suitable to support the pressure caused by the actuators;

(2) The valve-actuator unit shall be suitably stiff so as not to cause vibrations, misalignments, etc.

(3) All actuator-operated valves shall be provided with hand operated gearing mechanism also.

(4) All actuators operated valves shall open/ close fully within time required by the process.

(e) Valves coming under the purview of IBR shall meet IBR requirements.

(f) All valves shall be provided with embossed name plate giving details such as tag number, type, size etc.

(g) Wherever required valves shall be provided with chain operator, extension spindles and floor stands or any other arrangement approved by employer so that they can be operated with ease from the nearest operating floor. Wherever necessary for safety purpose locking device shall be provided. Further, necessary small platforms for facilitating easy valve operation shall be provided by the contractor wherever necessary in consultation with project manager within the bid price at no extra cost to employer

2.12.02 **VALVE BODY MATERIAL**

Valve body material for various services shall be as follows:

Valve body material for water application like Secondary circuit auxiliary cooling water of ECW system, Raw water, Ash water make-up, service water, clarified water, DM cooling water (pH corrected) , drinking water etc. shall be cast iron for sizes 65NB and above; gun-metal for sizes 50 Nb and below.

For compressed air application, valve body material shall be cast carbon steel or forged carbon steel for sizes 65 mm NB & above and Gun metal for sizes 50 NB and below.

DM water: SS body and disc along with SS internals. However for butterfly valves, Cast Iron /Ductile Iron/SG iron/carbon steel body and disc with elastomer lining are also acceptable.

Condensate: Cast Carbon Steel / Forged Carbon Steel.

2.12.03 The design, material, construction, manufacture, inspection, testing and performance of valves shall comply with all currently applicable statutes, regulations and safety codes in the locality where the valves will be installed. The valves shall conform to the latest editions of

applicable codes and standards as mentioned elsewhere. Nothing in this specification shall be construed to relieve the Bidder of his responsibility. Valves in general shall conform to the requirements of the following standards.

Standards and Codes

AWWA-C-504	Rubber seated butterfly valves.
BS-5155/EN-593	Cast iron and steel body butterfly valves for general purpose.
IS-778	Gun-metal gate, globe and check valves for general purpose.
BS-5154	Copper alloy globe/globe stop and check and gate valves for general purpose.
IS-780	Sluice valves for water works purpose (50-300 mm size)
IS-2906	Sluice valves for water works purpose (350-1200 mm size)
IS-5150	Cast iron wedge and double disc gate for general purpose.
BS-5152	Specification for cast iron globe valves.
BS-5153	Cast iron check valves for general purpose.
IS-5312	Swing check type reflux (non-return) valves.
ANSI B 16.34	Standard for valves.
API-594	Standard for Dual-check valves.
API-600	Steel gate valves.
ANSI-B-16.10	Valves face to face and other relevant dimension.
API-598	Valves inspection test.

2.12.04 **End Connections**

The end connections, shall comply with the following:

Socket welding (SW) - ANSI B 16.11

Butt Welding (BW) - ANSI B 16.25.

Threaded (SC) - ANSI B 2.1

Flanged (FL) - ANSI B 16.5& AWWA-C-207 (steel flanges), ANSI B 16.1 (Cast Iron flanges).

2.13.00 **Gate/Globe/Check Valves**

(a) All cast iron body valves (gate, globe and non-return) shall have flanged end connections; (screwed ends for Ductile D.2NI body valves are not acceptable).

(b) All steel and stainless steel body valves of sizes 65 mm and above shall have flanged or butt welding ends. Valves of sizes below 65mm shall have flanged or

socket welded ends. Compatibility of welding between valve body material and connecting pipe material is a pre-requisite in case of butt-welded joints.

(c) All gun metal body valves shall have screwed ends.

(d) All flanged end valves/specialties. shall be furnished along with matching counter flanges, fasteners, gaskets etc. as required to complete the joints.

(e) Gate/sluice valves shall be used for isolation of flow. All gate valves shall be of the full-way type, and when in the full open position the bore of the valve shall not be constricted by any part of the gate.

Gate valves shall be of the solid/elastic or articulated wedge disc. Gate valves shall be provided with the following accessories in addition to other standard items:

(1) Hand wheel

(2) Position indicator (for above 50 mm NB valve size)

(3) Draining arrangement wherever required.

(f) Globe valves shall be used for regulation purposes. They shall be provided with hand wheel, position indicator, draining arrangement (wherever required) and arrow indicating flow direction. Preferably, the valves shall be of the vertical stem type. Globe valves shall preferably have radiused or spherical seating and discs shall be free to revolve on the spindle.

The pressure shall preferably be under the disc of the valve. However, globe valves, with pressure over the disc shall also be accepted provided (i) no possibility exists that flow from above the disc can remove either the disc from stem or component from disc (ii) manual globe valves can easily be operated by hand. If the fluid load on the top of the disc is higher than 40-60 KN, bypass valve shall be provided which permits the downstream system to be pressurized before the globe valve is opened.

(g) Check valves shall be used for non-return service. They shall be swing. check type or double door (Dual plate)check type with a permanent arrow inscription on the valve body indicating the fluid flow direction. In long distance pipes lines with possibility of surge-occurrence, dual plate check valves are preferable for its spring controlled opening /closing of flaps/doors against flow reversals. However, dual plate check valves shall not be used for sizes more than 600mm NB.

(h) For bore greater than 2" the valves must be swing check type or dual plate check type suitable for installation in all positions (vertical and horizontal);

(i) For bore smaller than or equal to 2" the valves must be of the piston type to be installed, in horizontal position.

(j) All gate and globe valves shall be provided with back seating arrangement to enable on line changing of gland packing. The valves shall be preferably outside screw & yoke type.

(k) All gate and globe valves shall be rising stem type and shall have limit switches for full OPEN and full CLOSED indication wherever required. This will include motor-operated valves also wherever required. In such cases the limit switches shall form an integral part of the valve. Stop-gap arrangement in this respect is not acceptable.

(l) All valves except those with rising stems shall be provided with continuous mechanical position indicators; rising stem valves shall have only visual indication through plastic/metallic stem cover for sizes above 50 mm nominal bore.

(m) For Cl gate, globe and check valves wherever thickness of body/bonnet is not mentioned in the valves standards, thickness mentioned in IS- 1538 for fitting shall be applicable.

2.13.01 **MATERIAL OF CONSTRUCTION (GATE/GLOBE/CHECK VALVE)**

(a) The materials shall generally comply with the following:

(1) **Cast Steel Valves**

Body & bonnet	ASTM A 216 Gr. WCB/ ASTM A 105
Disc for non-return Valves	ASTM A 216 Gr. WCB/ ASTM A 105
Trim.	ASTM A 182 Gr. F6 or Equivalent

(2) **Stainless steel valves**

Body & Bonnet	SS 304
Disc	-do-
Trim.	SS 316

(3) **Cast iron valves**

Body & bonnet	BS 1452 Gr. 14/ IS-210 Gr. FG 260
Seating surfaces and rings	13% chromium steel/ 13% Chrome overlay
Disc for non-return valves	BS 1452 Gr. 14/IS-210 Gr FG 260
Hinge pin for non-return valves	AISI 316
Stem for gate globe valves	13% chromium steel or Equivalent
Back seat	13 % chromium steel / 13% Chrome overlay

(4) **Gun Metal valves**

Body and bonnet	IS 318 Gr. 2/ Equivalent Standard
Trim.	-do-

(b) Cast iron body valves shall have high alloy steel stem and seat.

(c) Material for counter flanges shall be the same as for the piping.

(d) Forged carbon steel valves are also acceptable in place of Gun metal valves.

2.14.00 **Air Release Valve**

(a) The air release valves shall be of automatic double air valve with two orifices and two floats. The float shall not close the valve at higher air velocities. The orifice contact joint with the float shall be leak tight joint.

(b) The valve shall efficiently discharge the displaced air automatically from ducts/pipes while filling them and admit air automatically into the ducts/pipes while they are being emptied. The valve shall also automatically release trapped air from ducts/pipes during operation at the normal working pressure.

(c) Body material of automatic air release valves shall comply generally with BS 1452 Gr. 14/IS: 210 Gr. FG 260. and spindle shall conform to high tensile brass.

(d) Air release valves shall not have any integral isolation device within them. Each Air release valve shall be mounted, preceded by a separate isolation gate/ butterfly valve.

2.15.00 **Butterfly valves**

2.15.01 **Design/Construction**

(a) The valves shall be designed for the design pressure/temperature of the system on which it is installed and in accordance with AWWA-C-504, EN-593 or AWWA-C-516 or any other approved equivalent standard latest edition depending on size. Fabricated steel (IS: 2062 GR. E-250B) butterfly valves instead of cast iron body valves are also acceptable for size above 300 mm nb diameter.

(b) The valves shall be suitable for installation in any position (horizontal/vertical etc.) and shall be generally of double-flanged construction. However for sizes 600 NB and below the valves of lugged Wafer construction are also acceptable

(c) Valves-350Nb and above shall have pressure equalizing bypass valves, wherever system parameters warrant the same.

(d) Valves-200Nb and above shall also be provided with gear operator arrangement as a standard practice suitable for manual operation. Manual operation of valve shall be through gear arrangement having totally enclosed gearing with hand wheel diameter and gear ratio designed to meet the required operating torque It shall be designed to hold the valve disc in intermediate position between full open and full closed position without creeping or fluttering. Adjustable stops shall be provided to prevent over travel in either direction.

Limit and torque switches (if applicable) shall be enclosed in water tight enclosures along with suitable space heaters for motor actuated valves, which may be either for On-Off operation or inching operation with position transmitter.

2.15.02 **Material of Construction (Butterfly Valves)**

Materials and other design details shall be as indicated below :

(a) **Cast Iron Butterfly Valves**

Body & Disc	ASTM A48, Gr. 40 with 2% Ni / IS: 210. Gr. FG-260, with 2% Ni / SG iron BSEN 1563, Gr EN GJS-400-15 with 2%Ni and epoxy coated

	Shaft	BS 970 431 S: 291 / EN 57, or AISI-410 or AWWA-permitted shaft material equivalent to EN-57/AISI-410 or better.
	Seat ring	18-8 Stainless steel
	Seal	Nitrile Rubber

(b) **Stainless Steel Butterfly Valves**

Body & Disc	SS 304
Shaft	SS 316
Seat Rings	EPT/BUNA-N/Neoprene

(c) **Carbon steel Butterfly Valves**

Body & Disc	ASTM A 216, Gr. WCB
Shaft	SS 304
Disc & Seat Rings	EPT/BUNA-N/Neoprene

(d) **Elstomer lined Butterfly Valves**

Body & Disc	ASTM A48, Gr. 40 / IS: 210. Gr. FG-260 / SG Iron (ductile iron) IS 1865 Gr 400-15 or BSEN 1563, Gr EN GJS-400-15 / ASTM A 216, Gr. WCB with elastomer lining.
Shaft	SS 316

2.15.03 **Proof of Design Test (Type Test) for Butterfly Valves**

Proof of Design (P.O.D.) test certificates shall be furnished by the bidder for all applicable size-ranges and classes of Butterfly valves supplied by him, in the absence of which actual P.O.D. test shall be conducted by the bidder.

All valves that are designed and manufactured as per AWWA-C-504 / AWWA-C-516 shall be governed by the relevant clauses of P.O.D test in AWWA-C-504/AWWA-C-516. For Butterfly valves, designed and manufactured to EN-593 or equivalent, the P.O.D. test methods and procedures shall generally follow the guidelines of AWWA-C-504 in all respect except that Body & seat hydro test and disc-strength test shall be conducted at the pressures specified in EN-593 or the applicable code. Actuators shall also meet requirements of P.O.D. test of AWWA-C-504/AWWA-C-516.

2.16.00 **Float operated valves**

(a) Valve shall automatically control the rate of filling and will shut off when a predetermined level is reached and close to prevent over flow on pre-set maximum water level. Valve shall also open and close in direct proportion to rise or fall of water level.

(b) DESIGN AND CONSTRUCTION FEATURES

The following design and construction feature of the valve shall be the minimum acceptable.

(c) Valves shall be right-angled or globe pattern.

(d) Valves shall be balance piston type with float ball.

(e) Leather liner shall not be provided.

(f) The body and cover material shall be cast iron conforming to ASTM-A 126 Grade 'B' or IS: 210 Grade 200 or equivalent, and Float shall be of copper with epoxy painting of two (2) coats.

(g) Valves shall be suitable for flow velocities of 2 to 2.5m/sec.

(h) The valves shall have flanged connections.

2.17.00 **Tanks and Accessories**

2.17.01 The designer and manufacturer of storage tanks shall comply with and obtain approval of all currently applicable statutory regulations and safety codes in the locality where the equipment will be installed. The tanks shall conform to IS 803/IS804/IS 805/ IS 2825/ API 650/ IS 4049/ IS 4682 (part-I) and IS 4864 to 4870/ ASME B & PV code Sec.-VIII as the case may be.

2.17.02 **DESIGN AND CONSTRUCTION**

(a) Design of all vertical atmospheric storage tanks containing water, acid, alkali and other chemical shall conform to IS:803 & API 650.

(b) Design of all horizontal atmospheric storage tanks containing water, acid, alkali and other chemicals shall generally conform to IS:2825 as regards to fabrication and general construction taking care of combined bending, shear & hoop stresses developed due to supporting arrangement.

(c) Tank shall be made from mild steel plates to BS 4360/IS-2062 Gr.E-250B (or equivalent) for ordinary wafer application when it is not corrosive in nature.

(f) Tank shall be provided with suitable supporting joints. All vessels shall be provided with lifting lugs, eye bolts etc. for effective handling during erection.

(j) Tanks shall be provided with float operated level indicators/level gauges/level transmitters and level switches, as required, with complete assembly. Suitable flanged pads for level switches mounting shall also be provided. The level indicator can be top or side mounted as the case may be.

(k) In addition to inlet and outlet nozzles, the tanks shall be provided with vents, overflow, drain nozzles complete for various connections on tanks. Overflow lines from storage tanks is to be routed to the nearest surface drains. For tanks containing dm water, alkaline water or power cycle water the vent to atmosphere shall be through carbon-di-oxide absorber vessel suitably mounted on the tank. CO_2 absorber vessel shall be provided with the initial fill of chemicals.

(l) Tanks shall have suitable stairs/ladders on inside and outside of the tanks, manholes/inspection covers as required and also platform suitably located.

(m) Tank supporting arrangement as approved by Employer shall be provided with all plates/angles/joints/flats and supporting attachment including lugs, saddles, legs etc.

(o) Tank fabrication drg. and design calculations shall be approved by the Project Manager.

2.17.03

Corrosion protection

(a) A corrosion allowance, applicable to surface in contact with corrosive media, when required after thorough cleaning by blast cleaning preceded by wire brushing shall be taken into consideration.

(b) Manholes shall be provided for easy access into the vessels. The size shall be minimum 500 mm and will be with cover plate, nuts bolts, etc. to ensure leak tightness at the test pressure.

(c) Each tank shall be provided with drilled cleats welded to the tank for electrical grounding. Material of cleats shall be same as that of the shell.

Sl. No.	Description	Tech. Particulars
DRINKING WATER TANK		
a)	Quantity	One per each Unit
b)	Liquid to be handled	Drinking Water
c)	Size and Min. Plate Thickness	5m long x 2.5m wide x 2.5m high; Plate Thk. (min.) 8mm Overall Cap.= 31.25 M^3 (Effective cap.: 25M^3).
d)	Type	Pressed steel rectangular tank Closed top/ welded construction
e)	Design pressure	Atmospheric
f)	Tank Standard	BS-1564/IS-804 (Latest Edition)
g)	Material of Construction	Plates to ASTM-A-36/IS-2062 Gr.B
h)	Flange Material Standard	ASTM-A-105/IS-2062-Gr. B
i)	Accessories	
	(i) Vent, Overflow, drain piping & valve	To be provided
	(ii) Manhole	To be provided
	(iii) Stair/Platform	To be provided
	(iv) Supporting structure	To be provided
	(v) Internal ladder	To be provided
	(vi) Level indicator	To be provided
	(vii) Root valve for level transmitter	To be provided
j)	Protection of Internal surface	Two coats of food grade epoxy paint

k)	Protection of external surface	Two coats of EPOXY based paint preceded by one(1) coat of primer. (minimum DFT 100 micron)
l)	Location	On Power House roof.

.....

1.00	**CONDENSATE STORAGE TANKS**	
1.01	Number required	one for each unit
1.02	Capacity of each tank (Effective)	350 Cu.m (for 660MW units),
1.03	Size (Dia & Height)/Plate Thickness	8.6mX7.2m minimum, Shell & Roof plate Thickness 8mm and Base plate thickness 10mm
1.04	Type and pressure class	Vertical, cylindrical, atmospheric
1.05	Material of construction	MS- (IS-2062 Gr.B or equivalent) as per specified code, 8mm thickness (minimum)
1.06	Location	Outdoor
1.07	Overflow, drain, vent and Sample connection(piping &valve)	required
1.08	Level Indicator	
	a) Number	One for each tank
	b) Type	Mechanical float type with dial type indicator (Guide wire, Float and Housing of Stainless steel - 316 Gr. construction)
1.09	Manhole (minimum 500mm size)	Two (2)-one on shell and the other on roof
1.10	Special Fittings	
	a) Hydraulic Seal of Overflow/Drain	Required

	b)	Additional nozzle Connection	number and size to be indicated to successful Bidder
	c)	Nozzle connection for Instrument/spare	Three (3) nos. for each tank
	d)	CO2 Absorber for vent (not to be kept on roof of tank, but to be kept on ground level)	required
	e)	Outside stair case (spiral)	required
	f)	Inside Ladder	Required
	g)	Draw off sump	required
	h)	Root valve for level Transmitter	Root valves for two (2) nos. level transmitter for each tank Required

---

2.18.00 **RUBBER EXPANSION JOINTS**

2.18.01 All parts of expansion joints shall be suitably designed for all stresses that may occur during continuous operation and for any additional stresses that may occur during installation and also during transient condition.

2.18.02 The expansion joints shall be single bellow rubber expansion joints. The arches of the expansion joints shall be filled with soft rubber.

2.18.03 The tube (i.e. inner cover) and the cover (outer) shall be made of natural or synthetic rubber of adequate hardness. The shore hardness shall not be less than 60 deg. A for outer and 50 deg. A for inner cover.

2.18.04 The carcass between the tube and the cover shall be made of high quality cotton duck, preferably, square woven to provide equal strength in both directions of the weave. The fabric plies shall be impregnated with age resistant rubber or synthetic compound and laminated into a unit.

2.18.05 Reinforcement, consisting of solid metal rings embedded in carcass shall be provided.

2.18.06 Expansion joints shall be complete with stretcher bolt assembly. The expansion joints shall be suitable to absorb piping movements and accommodate mismatch between pipe lines.

2.18.07 The expansion joints shall be of heavy duty construction made of high grade abrasion-resistant natural or synthetic rubber compound. The basic fabric for the' duck' shall be either a superior quality braided cotton or synthetic fibre having maximum flexibility and non-set characteristic.

2.18.08 The expansion joints shall be adequately reinforced, with solid steel rings, to meet the service conditions under which they are to operate.

2.18.09 All expansion joints shall be provided with stainless steel retaining rings for DM water application and IS 2062 Gr E-250B galvanized steel retaining rings for ordinary water for use on the inner face of the rubber flanges, to prevent any possibility of damage to the rubber

when the bolts are tightened. These rings shall be split and beveled type for easy installation and replacement and shall be drilled to match the drilling on the end rubber flanges and shall be in two or more pieces.

2.18.10 The expansion joints shall have integral fabric reinforced full-face rubber flanges. The bolt on one flange shall have no eccentricity in relation to the corresponding bolt hole on the flange on the other face. The end rubber flanges shall be drilled to suit the companion pipe flanges. The flanges shall be as per ANSI B 16.5. For higher sizes, not covered under ANSI B 16.5, the same shall be as per AWWA.

2.18.11 All exposed surfaces of the expansion joint shall be given a 3 mm thick coating of neoprene. This surface shall be reasonably uniform and free from any blisters, porosity and other surface defects.

2.18.12 Each control unit shall consist of two (2) numbers of triangular stretcher bolt plates, a stretcher bolt with washers, nuts, and lock nuts. Each plate shall be drilled with three holes, two for fixing the plate on to the companion steel flange and the third for fixing the stretcher bolt.

2.18.13 Each joint shall have a permanently attached brass or stainless steel metal tag indicating the tag numbers and other salient design features.

2.18.14 Bidder to note that any metallic part which comes in contact with DM /corrosive water shall be of Stainless Steel material.

2.18.15 **Life cycle test for RE Joints of Condenser CW Inlet Outlet lines:**

Life cycle test certificates shall be furnished by the bidder for each type and size of RE joints supplied by the Bidder, in the absence of which actual Life cycle test shall be conducted on one rubber expansion joint of each type and size .

2.19.00 **STRAINERS**

2.19.01 **Simplex type**

The strainers shall be basket type and of simplex construction. The strainer shall be provided with plugged drain/blow off and vent connections. The free area of the strainer element shall be at least four (4) times the internal area of the connecting pipe lines. The strainer element shall be 20 mesh. Pressure drop across the strainers in new condition shall not exceed 1.5 MCW at full flow. Wire mesh of the strainers shall be suitably reinforced, to avoid buckling under operation. Strainer shall have screwed blow off connection fitted with a removable plug. The material of construction of various parts shall be as follows:

(a)	Body	IS: 318, Gr. 2 up to 50 mm Nb, and IS: 210 Gr. FG 260 above 50 mm Nb. (For DM water/ -Body: AISI 316 or equivalent)
(b)	Strainer Element	Stainless steel (AISI 316)
(c)	End connection	Screwed upto 50 mm Nb, and Flanged above 50 mm Nb

2.19.02 **Duplex type**

(a) The strainers shall be basket type and of duplex construction. The strainer shall be provided with plugged drain/blow off and vent connections. The free area of the strainer element shall be at least four (4) times the internal area of the connecting

pipe. The mesh of strainer element shall be commensurate with the actual service required. Pressure drop across the strainer in new condition shall not exceed 4.0 MWC at full flow.

(b) Wire mesh (if applicable) of the strainers shall be suitably reinforced. The material of construction of various parts shall be as follows.

Body	IS: 318, Gr. 2 up to 50 mm Nb, and IS:210, Gr. FG 260 or ASTM-A-515 Gr. 75/IS-2062 Gr. E-250B and internally epoxy-painted above 50 mm NB.
Strainer element	Stainless steel (AISI 316)
End connection	Screwed up to 50mm Nb, and Flanged above 50 mm Nb. Gasket shall be of full face type

(c) The strainer will have a permanent stainless steel tag fixed on the strainer body indicating the strainer tag number and service and other salient data.

(d) The size of the strainer and the flow direction will be indicated on the strainer body casting.

(e) Thickness of the strainer element should be designed to withstand the pressure developed within the strainer due to 100% clogged condition exerting shut-off pressure on the element.

SURFACE PREPARATION & PAINTING

KHURJA SUPER THERMAL POWER PROJECT (2X660 MW) TURBINE GENERATOR AND ASSOCIATED PACKAGES BID DOC. NO.: THDC/RKSH/CC-9915-371	SEPARATOR

CLAUSE NO.	TECHNICAL REQUIREMENTS
1.00.00	**Specification of surface preparation & painting**
1.01.00	Surface preparation methods and paint/primer materials shall be of the type specified herein. If the contractor desires to use any paint/primer materials other than that specified, specific approval shall be obtained by the contractor in writing from the employer for using the substitute material.
1.02.00	All paints shall be delivered to job site in manufacturers sealed containers. Each container shall be labeled by the manufacturer with the manufacturer's name, type of paint, batch number and colour.
1.03.00	Unless specified otherwise, paint shall not be applied to surfaces of insulation, surfaces of stainless steel/nickel/ copper/brass/ monel/ aluminum/ hastelloy/lead/ galvanized steel items, valve stem, pump rods, shafts, gauges, bearing and contact surfaces, lined or clad surfaces.
1.04.00	All pipelines shall be Colour coded for identification as per the NTPC Colour-coding scheme, which will be furnished to the contractor during detailed engineering.
1.05.0	**SURFACE PREPARATION**
1.05.01	All surfaces to be painted shall be thoroughly cleaned of oil, grease and other foreign matter. Surfaces shall be free of moisture and contamination from chemicals and solvents.
1.05.02	The following surface schemes are envisaged here. Depending upon requirement any one or a combination of these schemes may be used for surface preparation before application of primer.
	SP1 Solvent cleaning
	SP2 Application of rust converter (Ruskil or equivalent grade)
	SP3 Power tool cleaning
	SP4 Shot blasting (shot blasting shall be used as surface preparation method for hot worked pipes prior to application of primer)
	SP4* Shot blast cleaning/ abrasive blast cleaning to SA21/2 (near white metal) 35-50 microns
	SP5 Phospating
	SP6 Emery sheet cleaning/Manual wire brush cleaning.
1.06.00	**APPLICATION OF PRIMER/PAINT**
1.06.01	The paint/primer manufacturer's instructions covering thinning, mixing, method of application, handling and drying time shall be strictly followed and considered as part of this specification. The Dry film thickness (DFT) of primer/paint shall be as specified herein.
1.06.02	Surfaces prepared as per the surface preparation scheme indicated herein shall be applied with primer paint within 6 hours after preparation of surfaces.
1.06.03	Where primer coat has been applied in the shop, the primer coat shall be carefully examined, cleaned and spot primed with one coat of the primer before applying intermediate and finish coats. When the primer coat has not been applied in the shop, primer coat shall be applied by brushing, rolling or spraying on the same day as the surface is prepared. Primer coat shall be applied prior to intermediate and finish coats.
1.06.04	Steel surfaces that will be concealed by building walls shall be primed and finish painted before the floor is erected. Tops of structural steel members that will be covered by grating shall be primed and finish painted before the grating is permanently secured.

CLAUSE NO.	TECHNICAL REQUIREMENTS
1.06.05	Following are the Primer/painting schemes envisaged herein: PS3 - Zinc Chrome Primer (Alkyd base) by brush/Spray to IS104. PS3* - Zinc Chrome primer (Alkyd base) by dip coat. PS4 - Synthetic Enamel (long oil alkyd) to IS2932. PS5 - Red Oxide Zinc Phosphate primer (Alkyd base) to IS 12744 PS9 - Aluminium paint to IS 2339. PS9* - Heat resistant Aluminum paint to IS-13183 Gr.-I (for temperature 400 degC – 600 degC), IS-13183 Gr.-II (for temperature 200 degC- 400 degC and IS-13183 Gr.-III (for temperature upto 200 degC) PS13 - Rust preventive fluid by spray, dip or brush. PS14 - Weldable primer-Deoxaluminate or equivalent. PS16 - High Build Epoxy CDC mastic `15'. PS17 - Aliphatic Acrylic Polyurethane CDE134 ,%V=40.0(min.) PS18 - Epoxy based TiO2 pigmented coat PS19 - Epoxy based Zinc phosphate primer (92% zinc in dry film (min.), %VS=35.0(min.). PS-20 - Epoxy based finish paint
1.06.06	All weld edge preparation for site welding shall be applied with one coat of wieldable primer.
1.06.07	For internal protection of pipes/tubes, VCI pellets shall be used at both ends after sponge testing and ends capped. VCI pellets shall not be used for SS components and composite assemblies.

This is part of Technical Specification No. PE-TS-475-155-A001

1.06.08 Primer/Painting Schedule

Sl. No	Description		Surface Preparation	Primer Coat			Intermediate Coat			Finish Coats			Total Min. Painting DFT (Microns)	Colour Shade
				Type of Primer	No. of Coats	Min. DFT / coat (Microns)	Type of coating	No. Coats	Min. DFT/ Coat (Microns)	Type of coating	No. Coats	Min. DFT/ Coat (Microns)		
A) Power Cycle Piping														As per NTPC Colour shade/ coding scheme
1.	All insulated Pipings, fittings/ components, Pipe clamps, Vessels/Tanks, Equipments etc.		SP3/SP4	PS 9*	1	20	-	-	-	PS9*	1	20	40	
2.	All un -insulated Pipings, fittings/ components, Pipe clamps, Vessels/Tanks, Equipments etc.	Design temperature < or equal to 60°C	SP3/SP4	PS 5	2	25	-	-	-	PS 4	3 $	35 $	155 $	
		Design temperature above 60 °C-200°C	SP3/SP4	PS 9*	1	20	-	-	-	PS9*	1	20	40	
		Design temperature > 200°C	SP3/SP4	PS9*	1	20	-	-	-	PS9*	1	20	40	
3	Constant Load Hanger (CLH), Variable Load Hanger (VLH).		SP4*	PS19	1	40	-	-	-	PS17	1	30	70	
4.	Piping hangers/ supports (other than (3) above. (un-insulated)		SP3/SP5	PS 5	2	25	-	-	-	PS4	2	25	100	
5.	Valves													

	Cast/Forged	Design temperature < or equal to 60 degC #	SP3/SP5	PS 5	2	35	-	-	-	PS4	2	25	120	
		Design temperature above 60 degC	SP3/SP5	PS 9*	1	20	-	-	-	PS9*	1	20	40	
6.	All auxiliary Structural Steel components for pipe supports	Outside TG building and in SG envelope	SP4*	Inorganic Ethyl Zinc Silicate	1	75	PS18	1	75	a))Epoxy coat b)Final coat of paint PS17	2 1	35 30	250	
		Within TG building	SP4*	-do-	1	35	PS18	1	35	a))Epoxy coat b)Final coat of paint PS17	2 1	25 30	150	
7.	Weld Edges		SP6 (Hand cleaning by wire brushing)	PS13 (Weldable primer)	1	25	-	-	-	-	-	-	25	

This is part of Technical Specification No. PE-TS-475-155-A001

714406/2022/PS-PEM-MAX

This is part of Technical Specification No. PE-TS-475-155-A001

1. $ The first 2 finished coats (total min.DFT of 70 microns) shall be done at shop and the 3rd finish coat (min.DFT 35 Microns) shall be applied at site.
2. For valves below 65NB and temperature upto and including 540 Deg.C, Parkerizing/zinc phosphate corrosion resistant coating as per ASTM F1137 is also acceptable in lieu of Aluminum paint.
3. For corrosion protection of threaded hanger rods and variable spring cages, electro galvanizing in full compliance to minimum Corrosion category C3 as per EN ISO12944 is also acceptable.
4. For spring cages, 2 coats of 30 µm(min) zinc-rich epoxy resin primer with zinc content> 80 weight% in dry film followed by 2 coats of 30 µm(min) top coat of Acrylic resin Co-polymerisate with a total combined minimum DFT of 120µm is also acceptable in lieu of above specified paint scheme.
5. For corrosion protection for all inner parts of the hangers shall be atleast in full compliance to Corrosion category C3 as per EN ISO12944.
6. # - For Cast/forged valves upto & including design temperature 60Deg.C, Aluminium painting as per IS-13183 Gr-3 or better with total DFT 40Micron is also acceptable.

B) LOW PRESSURE PIPING

		Surface Preparation	Type of Primer	No. of Coats	Min. DFT / coat (Microns)	Type of coating	No. Coats	Min. DFT/ Coat (Microns)	Type of coating	No. Coats	Min. DFT/ Coat (Microns)	Min. Total DFT (Microns)	
1	All Piping, fittings / components, valves, Equipments etc.	SP3/SP5	PS3/ PS5	2	25	PS 4	1	30	PS 4	2	35	150	As per NTPC Colour shade/ coding scheme
2	Stainless steel surface, Galvanized steel surface and gun metal surface.	No Painting											
3	On the internal surface for pipes 1000 Nb and above	A coat of primer followed by hot coal-tar enamel or coal tar epoxy painting (cold) shall be applied.											

Material Handling Equipments

TECHNICAL SPECIFICATION
ELECTRIC HOISTS & CHAIN PULLEY BLOCKS
2X660 MW THDC KHURJA TPS- TG & ASSOCIATES PKG

1.0 ELECTRIC HOIST AND MANUAL HOIST (CHAIN PULLEY BLOCK)

Required number of electric hoist / manual hoist of adequate capacity, to meet the erection and maintenance requirements are to be provided for the various areas.

Manual hoists (hand operated) shall be designed to duty class 2 as per IS 3832 and electric wire rope hoist shall be designed to duty class 2 as per IS: 3938 (latest).

The stipulations of all statutory codes like Indian Electricity Act, Indian Electricity Rules, Factory Acts, Local Municipality act etc. shall however prevail over the specification requirements, in case any conflict arises between this specification and the statutory codes.

Maintenance tools and tackles shall be as per data sheet attached.

DESIGN CRITERIA

1.0.0 Electrically operated wire rope hoists of suitable capacity, lift, and travel length shall be provided for handling of items weighing 2T and / or having lifting height more than 10m. Other hoist blocks shall be of hand operated type for both travel and lift. The hoist capacity shall be selected considering 25% margin over the weight of heaviest component /equipment to be handled. The hoist parameters (i.e. lift & travel) are subject to change/s, to suit the final layout of the area in which it is intended to be installed.

Electric hoist shall be provided for capacity >2T. Electric hoists shall be provided for lifts >10m irrespective of the capacity.
Chain pulley block (Manual hoist) - 300kg to <2T, wherever feasible, considering layout constraints.

Capacity of electric and manual (Chain pulley block) hoists shall be decided keeping 25% margin over equipment to be handled.

For hand operated hoists, the hoists shall be suitable for operation from floor level. Hand chain shall be provided for long travel of trolley and the Hoisting mechanism. The operator shall be able to control the movement of the electrical/ manual hoist with the help of floor operated pendant

MINIMUM LIFTING REQUIREMENT

S.N.	AREA DESCRIPTION	QTY (nos)	CAPACITY (T)	TYPE
1	LIST TO BE MENTIONED AS APPLICABLE			
2				
3				

Note:
1. Area, type, capacity mentioned are minimum requirement and shall be finalised during detail engineering without any commercial implication
2. Travel and Lift are layout dependent and shall be finalised during detail engineering without any commercial implication
3. Additional electric/manual hoist required during detail engineering shall be provided as per design criteria given above without any commercial implication.

2.0 SCOPE OF SUPPLIES

Equipment and services to be furnished by the bidder for the ELECTRIC HOIST/ MANUAL HOIST with accessories as per the details given in the technical specification and data sheet A. Any equipment / accessories not specified in the specification but required to make the ELECTRIC HOIST/ MANUAL HOIST complete and efficient operation shall also be under the

bidder's scope of work.
Compliance with this specification shall not relieve the bidder of the responsibility of furnishing material and workmanship to meet the specified working/duty conditions.

2.1.0 Electric hoist shall include but not be limited to the following: -

a) Equipment offered shall be suitable for indoor duty conforming to Class II of IS: 3938.
b) Equipment shall be designed to operate in non- hazardous area.
c) Electric hoists shall be pendent operated.
d) Both hoisting and trolley movement shall be motor driven.
e) Hoisting motion shall be thru' VVVF drives to achieve creep speed of 10% of main speed.
f) Wheels shall be single flanged type.
g) Hook shall be swiveling type and fitted with a safety latch.
h) Control panel shall be hoist mounted.
i) Power feeding to the electric hoists shall be thru' PVC shrouded DSL.
j) Brakes shall be fail to safety.
k) Load/overload testing of the hoists shall be carried out as per IS: 3938.
l) All material, castings and forgings will be of tested quality & certificates shall be made available for review as per approved QAP

2.2.0 Erection and Commissioning spares (ELECTRIC HOIST)
The Bidder shall also supply erection & commissioning spares along with his main equipment as per his experience, for replacement of damaged or unserviceable parts during the execution of the project at site, to avoid delay in the project schedule. This shall form part of the main equipment supply. The Purchaser shall retain the unutilized commissioning spares. The initial fill of lubricants, oil etc. shall also be supplied by the bidder.

2.3.0 Services to be provided by the bidder
Packing, forwarding and transportation to site, storage and handling at site.

2.4.0 Erection and Commissioning

2.5.0 Functional test (Overload testing, load testing at rated speed, travel and hoisting motion checks as per relevant Indian standards)

2.6.0 Obtaining clearance and acceptance certificate from the concerned competent authority after site test as applicable. Necessary fees/expenditure as required shall be borne by the supplier.

3.0 Inspection and Testing

As per enclosed reference quality plan and as per IS 3938 (latest revision). Prime inspection agency shall be Consultant/ End Customer. Equipment supplied shall be strictly in accordance with nomenclature & technical specification. Any additional testing requirement/CHP (Customer Hold Point) at any stage of inspection deemed necessary by Consultant/ End Customer during detailed engineering shall be carried out without any commercial or technical implication.

4.0 Works Excluded

Supply of ISMB monorail.

5.0 PAINTING SPECIFICATION

As per painting details specified elsewhere in specification.

6.0 PACKING

In general packing shall be wooden box packing.

7.0 TESTING AT VENDOR'S WORKS

Hoist along with its drives, controls and other accessories shall be demonstrated for the rated capacity against the rated speed of motions and for the service conditions specified as specified in QAP and as per IS 3938 for electric hoist and IS 3832 for manual hoist.

The bidder shall have the full responsibility for the safe and efficient operation of the hoist with associated accessories as a single unit.

If the shop performance tests indicate the failure of any of the components to achieve the guaranteed performance, the deficiency shall be made good at bidder's cost.

Demonstration tests shall be carried out each time after the rectification /modification is carried out.

8.0 MAKE OF SUB - VENDOR ITEMS

Makes of bought out items will be as per list specified in the specification. No other make will be acceptable, until and unless specifically got it approved by the purchaser/ end client. (Refer Annexure-I)

9.0 TESTING AT SITE

A) ELECTRIC HOIST:

As required for statutory clearance for operating at site i.e., overload test, load test and other tests as per IS 3938.

Test for Operation -After the supply has been connected, tests shall be carried out to prove the following:

a) The satisfactory operation of each controller, switch, contactor, relay and other control devices and in particular the correct operation of all limit switches under the most unfavorable conditions;
b) The correctness of all circuits and interlocks and sequence of operation; and
c) The satisfactory operation of all protective devices.

Overload Test -After test but before the hoist is put into service, it shall be tested with overload relays appropriately set, to lift and sustain a test load of 125 percent of the working load. During the overload test, the hoist shall sustain the load under full control. The specified speeds need not be attained but the hoist shall show itself capable of dealing with the overload without difficulty.

B) MANUAL HOIST:

As required for statutory clearance for operating at site with following minimum test i.e. overload and load test.

10.0 TECHNICAL DATA SHEET:

A) Technical data sheet-A for ELECTRIC HOIST:

Sl.no	DESCRIPTION	TECHNICAL PARTICULARS
1.0	Type	Steel wire electric hoist with electrically operated trolley
2.0	Scope (Qty., Capacity, Lift, Travel Length)	As mentioned in specification
3.0	Type of service	Indoor
4.0	Overload test	125% of SWL
5.0	Design Ambient temperature	50° C
6.0	General Design	As per IS: 3938 / 1983 or latest, Class-II duty
7.0	Operating speed	

7.1	Hoisting speed/ Creep speed (thru' VVVF drive)	3 MPM with creep speed 10% of main speed.
7.2	Trolley speed	10 MPM
8.0	Type of transmission	Through Electric motor and gear box.
9.0	Wire Rope	
9.1	Construction / core	6 x 36 or 6 x 37 construction, steel/ Fibre core
9.2	Code	IS:2266
9.3	Tensile designation	1770/1960 N/mm2
9.4	Number of falls	Min. 4
9.5	Factor of safety	Not less than 5
10.0	Load Hook and block	Normalized hook only
10.1	Type of load hook	Plain shank trapezoidal section with safety latch.
10.2	Load hook Code	IS: 15560
10.3	Load hook Material	Alloy steel/carbon steel as per IS:15560
10.4	Hook suspension	Thrust bearing
10.5	Material of block suspension	Fabricated from steel plate, Material: IS: 2062
10.6	Hook can swivel freely under full load	Yes
10.7	Safety latch on hook provided	Yes
10.8	Locking device on swivelling hook	Provided
10.9	Bearing type	Antifriction Ball / Roller
10.10	Bearing life	10,000 working hours.
11.0	Gearing	
11.1	Type	Spur / Helical, hardened and tempered with machine cut teeth
11.2	Gear material	Forged steel as per IS 3938
11.3	Lubrication	Oil splash/ grease lubricated
11.4	Bearing type	Antifriction Ball / Roller
11.5	Bearing life	10,000 working hours.
12.0	Trolley drive	
12.1	Wheel	Single flange taper thread
12.2	Wheel conform to (Std. / code)	IS: 3938
12.3	Wheel material	Heat treated carbon steel/ low alloy steel, graded cast iron.

12.4	Bearing type	Antifriction Ball / Roller
12.5	Bearing life	10,000 working hours.
12.6	Trolley type	Rolled structural steel with side plates extended beyond wheel flanges to protect wheels.
12.7	Hardness	Max hardness 200 BHN
13.0	SHEAVE	
13.1	Material	Cast steel or mild steel.
13.2	Bearing type	Antifriction Ball / Roller.
13.3	Bearing life	10,000 working hours.
14.0	BRAKE (HOIST)	
14.1	Type	DC EM brakes disc type (fail to safety).
14.2	Capacity	As per IS 3938.
14.3	Number	One number for each motor.
15.0	BRAKE (TROLLEY)	
15.1	Type	DC EM brakes disc type (fail to safety).
15.2	Capacity	As per IS 3938.
15.3	Number	One number for each motor
16.0	ROPE DRUM	
16.1	Material	Cast iron, cast steel or mild steel.
16.2	Flange / Flangeless	Flanged
16.3	Type of groove	As per manufacturers standard to suit the layout requirement.(Shall be decided during detail engineering)
17.0	TYPE OF DSL	
17.1	CT travel	PVC shrouded GI conductor bus bar -DSL shall be sized with a margin of 10% over load requirement.
18.0	MOTORS	
18.1	Type	Sq. Cage induction, TEFC, S4 duty, 40% CDF.
18.2	Number of start	150 starts / hr, Motors shall be suitable for direct on-line (DOL) starting
18.3	Voltage , Phase and Frequency	Suitable for rated frequency of 50 Hz with a voltage variation of +/-10% and frequency variation of +3 to -5% occurring separately or combined voltage and frequency variation of 10%. 3 phase, 4 wire

18.4	Class of insulation	Class “F” and temperature rise limited to class B.	
18.5	Type of enclosure	TEFC	
18.6	Degree of protection provided for enclosure	IP-55	
18.7	Margin	Motor nameplate rating at 50 deg C shall have Motor rating will be calculated keeping margin of at least 10% over the maximum power requirement.	
19.0	LIMIT SWITCHES	Hoisting	Trolley
19.1	Type	One (1) no. Snap action, self-actuating type	One (1) no. two way limit switch
20.0	Control panel	* Fabricated from CRCA sheet steel not less than 1.6 mm thick * Degree of protection shall be IP 52 * Power on indicating lamps shall be provided * Panel illumination lamps operated by door switch. * 2 nos earthling terminals on panel. * Gland plate thickness shall be minimum 3mm. * Gland plate shall be double brass compression type.	
20.1	Qty	1 No.	
21.0	Pendent Push buttons	Up /down / forward / Reverse push buttons. Indicative marking for easy operation shall be provided.	
22.0	Fixed type Power cables	Copper/Aluminum material, minimum size : Min. 2.5 mm2 for Cu/ min 6 mm2 for Aluminum. Extruded PVC insulated, armoured and FRLS PVC sheathed heavy duty 1100 V	
23.0	Fixed type Control cable	Copper material, min. 1.5 mm2 Control cables shall have stranded copper conductor, Extruded PVC insulated, armoured and FRLS PVC sheathed heavy duty 1100 V	
24.0	Trailing cable (Power/ Control)	EPR insulated, copper conductor trailing cables, as per IS:9968.	
25.0	Control Voltage	110 V	
26.0	End stopper for CT	2 nos., MOC shall be as per IS 2062	
27.0	Buffer for CT	2 nos. Spring/rubber type shall be provided on trolley	
28.0	Bearing (Type/life)	Antifriction Ball / Roller, 10,000 working hours life	

B) MANUAL HOIST (CHAIN PULLEY BLOCK):

DATA SHEET-A

1.0	**Type**	Chain pulley block with/without trolley
2.0	**General Design**	IS: 3832
3.0	**Duty Class as per IS:3832**	Class –II

TECHNICAL SPECIFICATION
ELECTRIC HOISTS & CHAIN PULLEY BLOCKS
2X660 MW THDC KHURJA TPS- TG & ASSOCIATES PKG

4.0	**Hoisting Mechanism**	
a)	Type	Hand operated gear transmission
b)	Type of gear	Spur / Helical
c)	Load Chain	
i)	Type	Link type
ii)	Material	As per relevant standard
iii)	Conforms to (Std./Code)	IS: 6216 / IS 3077/IS 3019
d)	Hand Chain	
i)	Type	Link type
ii)	Material	Mild steel Grade 30
iii) :	Conform to Std.	IS:2429 (Part II)
e)	Load Hook & Hook Block	
i)	Type of load hook	Plain shank- Trapezoidal section/ 'C' type
ii)	Load hooks conforms to	IS: 15560
iii)	Type of hook suspension	Swivelling type with safety latch
iv)	Type of make of bearing	Thrust ball bearing of hook suspension
v)	Type & Material of hook	As per IS 15560
f)	Gears/ Pinions	
i)	Type	Spur
ii)	Material	Alloy steel / carbon steel/ High graded cast iron
	Type of Bearing	Antifriction ball bearing / Roller
g)	Sprockets:	
	Type of bearings used	Antifriction ball bearing / Roller
i)	Method of lubrication	
	Bearings	Grease
	Gearing & Pinions	Grease
	Sprocket	Grease
h)	Brakes	
	Type	Screw and friction disc type
5.0	**Trolley and Bridge drive**	
a)	Trolley	Geared (Manually operated)
i)	Type	Mild steel (IS:2062 Grade A or B)
ii)	Material of frame	
b)	Drive Chain	Link type
i)	Type	Steel Gr.30
ii)	Material	IS : 2429 part 1 :1870
iii)	Design of drive chain	
c)	Wheel	Two in each trolley/bridge
i)	Number of pairs of wheel	Single flanged
ii)	Flange	Antifriction
iii)	Type of bearings need	As per IS 3832
iv)	Wheel material	
d)	Gears	
i)	Type	Spur / helical
ii)	Material	Cast iron/EN8
iii)	Type of bearings used	Antifriction
e)	Method of lubrication for	
i)	Bearings	Grease
ii)	General	Grease
iii)	Sprockets	Grease

6.0	**Painting**	As per manufacturer's standard

11.0 Maintenance Tools and Tackles

One (1) complete unused new set of special purpose tools, tackles and accessories along with detailed instructions and maintenance manual shall be supplied. Tools shall be of suitable sizes for maintenance of electric hoist of each type and capacity. Each tool and wrench shall be stamped so as to be identified easy for its use. The tools shall be supplied in steel toolbox and with a copy of instruction manual. The items supplied shall be of the best quality, specially protected against rusting. The following shall be provided as minimum requirement:

S. No.	Description	Qty.
1	Complete set of ring spanners	1 Set
2	Complete set of screwdrivers (Min. 6 nos of suitable sizes)	1 Set
3	Adjustable Spanner	1 No.
4	Insulated pliers	1 No.
5	Wrench spanner	1 No.
6	Grease Gun	1 No.
7	Oil Gun	1 No.
8	Hand Lamp	1 No.
9	Line tester	1 No.

Note: -The tools shall be supplied in one tool box. Bidder shall ensure that the tools & tackles mentioned in above list are sufficient to handle all sizes/capacities of hoists & in case any other /additional tool is required for handling/maintenance any size/capacity of hoist the same shall be included in this list.

12.0 DRAWING/DOCUMENT SUBMISSION

The successful bidder shall submit the following drawings / documents during detail engineering for customer's approval /information:

A) ELECTRIC HOIST

Sl. No.	BHEL DRG.NO	DRAWING TITLE
1	PE-V0-475-553-A100	Manufacturing Quality Plan with Sub vendor list
2	PE-V0-475-553-A101	GA Drawing for Electric Hoist, DSL arrangement and painting details
3	PE-V0-475-553-A102	Schematic Circuit Diagram
4	PE-V0-475-553-A103	Mechanism Sizing Calculation
5	PE-V0-475-553-A105	O & M Manual

B) MANUAL HOIST (CHAIN PULLEY BLOCK):

Sl. No.	BHEL DRG.NO	DRAWING TITLE
1	PE-V0-475-553-A200	Manufacturing Quality Plan

2	PE-V0-475-553-A201	GA Drawing for Chain Pulley Block with detail BOM with painting details
3	PE-V0-475-553-A202	O & M Manual

Notes:

1. The above drawing list is tentative and shall be finalized with the successful bidder after placement of order.

2. Drawings shall be prepared in Auto-Cad latest edition. Required no. of hard and soft copies (editable) of the drawings shall be furnished as per requirement specified elsewhere in the specification.

3. All the drawings and documents including general arrangement drawing, data sheet, calculation etc. to be furnished to the customer during detailed engineering stage shall include / indicate the following details for clarity w.r.t. Inspection, construction, erection and maintenance etc.:-

   a) All drawings and documents shall indicate the list of all reference drawings including general arrangement.

   b) All drawings shall include / show plan, elevation, side view, cross - section, skin section, blow - up view; all major self-manufactured and bought out items shall be labeled and included in BOQ / BOM in tabular form.

   c) Painting schedule shall also be made as a part of general arrangement drawing of each equipment / items indicating at least 3 trade names.

   d) All the drawings required to be furnished to customer during detailed engineering stage shall include technical parameters, details of paints and lubrication, hardness and BOQ / BOM in tabular form indicating all major components including bought out items and their quantity, material of construction indicating its applicable code / standard, weight, make etc.

   e) Drawings/ documents to be submitted for purchaser's review/ approval shall be under Revision A, B, C… etc. while drawings /documents to be submitted thereafter for customer's approval after purchaser's approval shall be under R-0, 1, 2, 3 etc.

ANNEXURE I: MAKES AND SUB VENDOR LIST

Package Name	Vendor Name
ELECTRIC HOIST	Alpha Services
	CONSOLIDATED HOISTS PVT LTD
	CENTURY CRANE ENGINEERS PVT. LTD.
	TECHNO INDUSTRIES
	EDDY CRANES PVT. LTD.
	Grip Engineers Pvt. Ltd.,
	TRACTEL TIRFOR INDIA PVT. LTD.
	Mangla Hoists Pvt Ltd
	BRADY & MORRIS ENGINEERING CO. LTD.
	REVA INDUSTRIES LTD.
	UNIVERSAL HOIST-O-FABRIK
CHAIN PULLEY BLOCK	UNIVERSAL HOIST-O-FABRIK
	CENTURY CRANE ENGINEERS PVT. LTD.
	BAKELITE ELECTRICAL MFG. CO. PVT. LTD.
	TRACTEL TIRFOR INDIA PVT. LTD.
	BRADY & MORRIS ENGINEERING CO. LTD.
	TUOBRO FURGUSON (INDIA) PVT LTD
	TECHNO INDUSTRIES

Note: No other make will be acceptable, until and unless specifically got approved by BHEL/Customer / Customer's consultant during detail engineering only. Acceptance/non acceptance of same shall not have any impact on manufacturing, delivery schedule and on cost of the Electric hoists/CPB.

MAKES OF SUB VENDORS ITEMS AS APPLICABLE TO ELECTRIC HOIST:

S. No.	ITEM	MAKES
1.0	STEEL	SAIL/IISCO/TATA STEEL / JINDAL
2.0	HOOKS	MOOZUMDAR / SIMRITI FORGING / HARMAN MOHTA / STEEL FORGING & ENGG. CO., KOLKATA /
3.0	GEAR COUPLINGS	ALLIANCE / HICLIFF / OEM
4.0	WIRE ROPE	USHA MARTIN Black / BOMBAY WIRE ROPES / FORT WILLIAMS / UNITED WIRE ROPE/BHARAT WIRE ROPES.
5.0	BEARINGS	SKF/ FAG
6.0	MOTORS	SIEMEN/ ABB /NGEF/ CROMPTON /KIRLOSKAR /GECA / BHARAT BIJLI / MARATHON / LHP.
7.0	BRAKES	STROM CRAFT/ ELECTROMAG /SPEED-O- CONTROL / EMCO LENZE
8.0	CONTACTOR	SIEMENS / L&T /TELE MECHANIQUE / BCH
9.0	OVER LOAD RELAYS	SIEMENS / L&T / TELE MACHANIQUE / ABB
10.0	HRC FUSES	SIEMENS / L&T/ ENGLISH ELECTRIC/GE Power
11.0	ISOLATING SWITCH	SIEMENS/ L&T / CONTROL & SWITCH GEAR
12.0	SWITCH FUSE UNITS	SIEMENS/ L&T/ CONTROL/ & SWITCH GEAR/ GEC A
13.0	TIME DELAY RELAYS	SIEMENS/ L&T/ ABB/ BCH/ GEC A
14.0	TRANSFORMERS	INDCOIL/AE / LOGICSTAT/ PRAGATI / KAPPA / SOUTHERN ELECTRIC
15.0	BULB & FLOURESCENT TUBES/FITTINGS	PHILIPS/ BAJAJ/ CROMPTON
16.0	CABLE LUGS (HEAVY DUTY)	DOWELLS
17.0	CABLES	
a)	POWER CABLES	NICCO / UNIVERSAL / INCAB / FORT GLOSTER TORRENT / CCI / ICL / RADIANT / FINOLEX/ POLYCAB/KEI/HAVELL
b)	CONTROL CABLES	NICCO / UNIVERSAL / INCAB / FORT GLOSTER / DELTON / FINOLEX / TORRENT / CCI / ICL / RADIANT POLYCAB / KEI/ HAVELL.

c)	TRAILING CABLE	UNIVERSAL/ FGL/CCL/HVP/KEI/RADIANT.
18.0	CABLE GLAND	COMMET / SIEMEN / SUNIL&CO.
19.0	PUSH BUTTONS	SIEMENS / L&T / BCH /TEKNIC/VAISHNO
20.0	LIMIT SWITCHES	SPEED-O-CONTROL / ELECTROMAG / JAI BALA JI / KAYCEE / BCH
21	SELECTOR SWITCHES	KAYCEE/ SULZER
22	PENDENT PUSH BUTTON STATION	OEM
23	INDICATING LAMPS	TECKNIC / BCH / SIEMENS / STANDARD/ VAISHNO
24	MCB	MDS / INDO COPP / STANDARD
25	PANELS	OEM/BCH
26	DSL	SUSHEEL/STROMAG
27	TERMINAL BLOCKS	ELMEX/CONNECTWELL/WAGO (FOR CONTROL ONLY)
28	VVVF	YASAKAWA(L&T)/ABB/SIEMENS/SCHNIDER
29	CASTING	KOLHAPUR STEEL / GNAT FOUNDARY / KIRTI ALLOYS
30	Tools & tackles	Reputed make

MAKES OF SUB VENDORS ITEMS AS APPLICABLE TO MANUAL HOIST:

S. No.	ITEM	MAKES
1.0	STEEL	SAIL/IISCO/TATA STEEL / JINDAL
2.0	HOOKS	STEEL FORGINGS/ KARACHIWALA/SMRITI/NASIK FORGE.
3.0	STEEL FORGINGS	CHOWDHARY/WESTERN INDIA FORGINGS/ HINDUSTAN STEEL FORGINGS/ RUBY FORGINGS OR AS APPROVED BY BHEL.
4.0	BRAKES	OEM

NOTE:

1) THE SUB VENDOR LIST ABOVE IS INDICATIVE ONLY AND IS SUBJECT TO BHEL AND CUSTOMER APPROVAL DURING DETAILED ENGINEERING STAGE WITHOUT ANY COMMERCIAL & DELIVERY IMPLICATION TO BHEL.

TECHNICAL SPECIFICATION
ELECTRIC HOISTS & CHAIN PULLEY BLOCKS
2X660 MW THDC KHURJA TPS- TG & ASSOCIATES PKG

PAINTING SPECIFICATION

1) Painting specification for steel structures: -

Surface preparation	De greasing and Mechanical cleaning with wire brush or blasting according to SIS 055900, Grade 2 ½ .
Primer	HB Zn Phosphate - 2 coat, Minimum DFT 80 µ per coat
Finish Coat	HB MIO epoxy - 1 coat, Minimum DFT 120 µ per coat
Total DFT	260 µm

2) Painting specification for Indoor components such as motors, electrical parts etc:-

Surface preparation	Blasting according to SIS 055900, Grade 2 ½. Depending on production flow, a weldable, inorganic ethyl zinc silicate shop primer of minimum dry film thickness 25 µm may be used.
Primer	Zinc phosphate epoxy - 2 coat, Total DFT 80 µm.
Finish Coat	Chlorinated rubber paint- 2 coats, Total DFT 80 µm for indoor and 100 µm for outdoor.
Total DFT	160 µm for indoor and 180 µm for outdoor

3) Color Shade:

SL. No	Item Description	Color Shade
1	Crane Structure	Golden Yellow shade 356 as per IS-5
2	Trolley and hook	Crimson shade 540 as per IS-5
3	Motors	Light grey, shade 631 as per IS-5
4	Control Panels	Paint shade shall be RAL 9002 for front & rear and RAL 5012 for side covers.
5	Bottom Block assembly.	Golden Yellow shade 356 as per IS-5
6	End Carriage sweep.	Golden Yellow shade 356 as per IS-5

	MANUFACTURERS NAME & ADDRESS		MANUFACTURING QUALITY PLAN				PROJECT			2X660 MW THDC KHURJA TPS- TG & ASSOCIATE PKG.		
	AS PER APPROVED VENDOR LIST		ITEM:	ELECTRIC WIRE ROPE	QP NO		PACKAGE			ELECTRIC WIRE ROPE HOIST		
					REV	0	CONTRACT No					
					DATE	JUNE, 2020	CONTRACTOR			BHEL-PEM		
					PAGE	1 of 4						

Sl.No	COMPONENT & OPERATIONS	CHARACTERISTICS	CATEGORY	TYPE OF CHECK	EXTENT OF CHECK	REFERENCE DOCUMENT	ACCEPTANCE NORMS	FORMAT OF RECORD	D*	AGENCY M	AGENCY C	AGENCY N	REMARKS
1	2	3	4	5	6	7	8	9		**	10		11
1.0	**RAW-MATERIALS**												
1.1	a) STRUCTURAL MATERIAL b) RAW MATERIAL FOR HOIST AND GEAR BOX HOUSING, TROLLEY PLATE, ROPE DRUM IF FABRICATED ETC	CHEM & MECH PROPS	MA	Lab analysis	1 SAMPLE PER LOT%	IS 2062 /APPD. DRG./ DATA SHEET		MTC/IR	√	P/V	V	V	Test shall be carried out in absence of mill TC or non-correlation of TC with material.BHEL to identify Samples for testing. Test to be carried out at NABL accredited Lab. Reports to be submitted for verification during inspection.
		NDT	MA	UT	100%	ASTM A388-2004	NOTE 1	IR	√	P	V	V	For dia / plate thickness above 25 mm
1.1 A	SEAMLESS PIPE FOR ROPE DRUM	CHEMICAL , MECHANICAL	MA	Lab analysis	1 SAMPLE /pipe	Approved drg/ASTM A 106 Grade A or B		MTC/IR	√	P/V	V	V	Test shall be carried out in absence of mill TC or non-correlation of TC with material.BHEL to identify Samples for testing. Test to be carried out at NABL accredited Lab. Reports to be submitted for verification during inspection
		Flattening & Acid Etching test	MA	PHYSICAL & METALLOGRAPHY	1 SAMPLE /pipe	No cracks, pitting, rusting , damage etc		IR	√	P	V	V	
		SURFACE DEFECTS	MA	Visual	100%								
1.2	FORGINGS FOR GEARS BLANKS ,PINIONS, SHAFT/AXLES, WHEELS , STEEL CASTINGS	MECH , CHEM. PROPS	MA	Lab analysis	100%	APPD. DRG./ DATA SHEET	APPD. DRG./ DATA SHEET / IS:3938	LAB. REPORT / MANUFACTURER'S TEST CERTIFICATE	√	P	V	V	
		NDT	CR	UT	100%	ASTM A 388	NOTE 1	INSPN. REPORT	√	P	**V**	V	IF DIA or THK > 50mm
		Hardeness , surface defects after hardfacing and machining/grinding	MA	DPT/MPI	100%	ASTM E -165 /E-709, No linear indication		MTC	√	P	**V**	V	
1.3	WIRE ROPE	Dimensional, type, constrcution ,	MI	measurement	100%	APPD. DRG./ DATA SHEET	APPD. DRG./ DATA SHEET	MFRS' TEST CERT.	√	P	V	V	
		EXAMINATION OF REPORT OF BREAKING LOAD CAPACITY	CR	Review of TC	100%	IS: 2266		MFRS' TEST CERT.	√	P	V	V	
1.4	HOOKS	MECH. , CHEM. PROPS.	MA	LAb analysis	100%	APPROVED DRG/DATA SHEET IS:15560		MFRS' TEST CERT.	√	P	V	V	
		U.T IF SHANK DIA > 50mm	CR	NDT	100%	ASTM A 388	NOTE 1	INSPN. REPORT	√	P	V/W	V	SHANK PORTION ONLY
		Dimension & PROOF LOAD TESTING	CR	Measurment , PROOF LOAD TEST	100%	APPROVED DRG/DATA SHEET / IS:3938 / IS:15560		QCR	√	P	V/W	V	IF REQUIRED BY END CUSTOMER.
		DPT AFTER PROOF LOAD	CR	NDT	100%	ASTM E-165	NO CRACKS	INSPN. REPORT	√	P	V/W	V	
1.5	SHEAVES	MECH	MA	Tensile & hardness	1/lot	Approved drgs		MTC/IR	√	P	V	V	

	MANUFACTURERS NAME & ADDRESS		MANUFACTURING QUALITY PLAN				PROJECT			2X660 MW THDC KHURJA TPS- TG & ASSOCIATE PKG.		
	AS PER APPROVED VENDOR LIST		ITEM:	ELECTRIC WIRE ROPE	QP NO		PACKAGE			ELECTRIC WIRE ROPE HOIST		
					REV	0	CONTRACT No					
					DATE	JUNE, 2020	CONTRACTOR			BHEL-PEM		
					PAGE	1 of 4						

Sl.No	COMPONENT & OPERATIONS	CHARACTERISTICS	CATEGORY	TYPE OF CHECK	EXTENT OF CHECK	REFERENCE DOCUMENT	ACCEPTANCE NORMS	FORMAT OF RECORD	D*	AGENCY M	AGENCY C	AGENCY N	REMARKS
1	2	3	4	5	6	7	8	9		**	10		11
1.6	CASTING FOR BEARING PLATED, ROPE GUIDES, PULLEYS ETC	CHEMICAL & MECHANICAL	MAJOR	LAB ANALYSIS	1/LOT	APPROVED DRG/MFG STANDARD	APPROVED DRG/MFG STANDARD	LAB REPORT	√	P	V	V	
2.0	**IN-PROCESS**												
2.1	Welding process capability and welder skill	WPS,PQR & WPQ	MA	Welding procedure approval and Welder performance qualification in accordance with ASME Section IX	100%	ASME Section IX		WPS,PQR & WPQ		P	V	V	In case approved WPS/PQR/WPQ from BHEL/NTPC/EIL/LLOYDS/TPL available, then documents/records to be submitted for verification during inspection, else, Vendor shall get the approval of Welding Procedure / Welder from the identified agency prior to carrying out welding at the job.
2.2	Welding of trolley, rope drum etc	Fillet weld	MA	DPT	10%	ASTM E165 or Eq/ No cracks or linear indication		INSPN. REPORT	√	P	V	V	
		Butt welds	MA	RT, DPT	100%	ASME SEC VIII, DIV 1, UW 51/52		RT FILM & REPORT	√	P	V	V	100% RT for butt weld in tension and 10 % in compression. 100% RT on butt weld of rope drum
		DPT AFTER STRESS RELIEVING OF ROPE DRUM	MA	NDT	100%	ASTM E-165	NO CRACKS	INSPN. REPORT	√	P	V	V	
2.3	NDT OF LOAD BEARING BUTT WELDS (**IF ANY**)	WELD QUALITY OF BUTT WELDS IN TENSION	CR	PT & RT	100%	ASME SEC. VIII DIV. I	ASME SEC. VIII DIV. 4 . CLUW-51 FOR RT APPENDIX -8 FOR PT	INSPN. REPORT ND FILM	√	P	W	V/ W	FILMS TO BE REVIEWED BY BHEL & END CUSTOMER/THIRD PARTY. DPT SHALL BE CHP .
2.4	**GEAR BOXES**												
	COMPLETE ASSEMBLY	OVERALL DIMENSIONS. LEAK TEST, REDUCTION RATIO, BACK LASH AND CONTACT PATTERN,	MA	MEAS./VISUAL	100%	MFG. DRG./KERSON E TEST	MFG. DRG./NO LEAKAGE WHEN FILLED	INSPN. REPORT	√	P	V		
	NO LOAD RUN TEST FOR 4 HRS	CHECK FOR OIL LEAKAGE, VIBRATION, NOISE ,TEMP. RISE. REDUCTION RATIO, BACKLASH , CONTACT PATTERN	MA	PERFORMANCE	100%	APPROVED DRGS /No leakage,Noise 85dbA maxat 1 mtrs, vibration 75 microns max, oil temp rise 20 deg above ambient max		- DO -	√	P	V	V	
3.0	**ELECTRICALS**												
1	MOTORS & CABLES	Make, type , rating	MA	Visual /measurment	100%	Apprvd drg	IS 325 / IS:3938	IR, MTC	√	P	V	V	For motor refer Note: 2
		ROUTINE TESTS											
3	LIMIT SWITCHES,SFU, ISOLATOR/ O/L RELAY, MCB, FUSES,PUSH BUTTONS,CONTACTOR, INDICATING LAMPS etc	Make , type , rating, functional, Continuity	MA	Review of TC	100%	Approved drgs		IR	√	P	V	V	
4	BRAKES	Make , type , rating, HV/IR, Functional test	MA	Review of TC	100%	Approved drgs		IR, MTC	√	P	V	V	
5	DSL	Make , type , rating, dimension	MA	Review of TC	100%	Approved drgs		IR	√	P	V	V	
6	Control transformer	Make , type , rating, input/output	MA	Review of TC	100%	Approved drgs		IR	√	P	V	V	

	MANUFACTURERS NAME & ADDRESS		MANUFACTURING QUALITY PLAN				PROJECT	2X660 MW THDC KHURJA TPS- TG & ASSOCIATE PKG.
	AS PER APPROVED VENDOR LIST		ITEM:	ELECTRIC WIRE ROPE	QP NO		PACKAGE	ELECTRIC WIRE ROPE HOIST
					REV	0	CONTRACT No	
					DATE	JUNE, 2020	CONTRACTOR	BHEL-PEM
					PAGE	1 of 4		

Sl.No	COMPONENT & OPERATIONS	CHARACTERISTICS	CATEGORY	TYPE OF CHECK	EXTENT OF CHECK	REFERENCE DOCUMENT	ACCEPTANCE NORMS	FORMAT OF RECORD	D*	AGENCY M	AGENCY C	AGENCY N	REMARKS
1	2	3	4	5	6	7	8	9		**	10		11
`	CONTROL PANEL, PENDANT SWITCH	* FIXING OF COMPONENTS WIRING MARKING CONTINUITY * FUNCTIONAL TEST * IR & H.V. TEST * IP - PROTECTION TEST * PAINT SHADE, THICKNESS, SHEET THICHKNESS, ADHESION TEST * DIMENSION	MA	VISUAL/MEASUR	100%	APPD.DRG. WIRING DIAGRAM,	APPD. DRG. WIRING DIAGRAM,	IR	√	P	V	V	
8	VVVF DRIVES (IF APPLICABLE)	MAKE , TYPE , RATING , ROUTINE TESTS	MA	VISUAL/ VERIFY	100%	APPROVED DRAWINGS	APPROVED DRAWINGS	MTC	√	P	V	V	
4.0	FINAL INSPECTION												

	MANUFACTURERS NAME & ADDRESS	MANUFACTURING QUALITY PLAN				PROJECT	2X660 MW THDC KHURJA TPS- TG & ASSOCIATE PKG.
	AS PER APPROVED VENDOR LIST	ITEM:	ELECTRIC WIRE ROPE	QP NO		PACKAGE	ELECTRIC WIRE ROPE HOIST
				REV	0	CONTRACT No	
				DATE	JUNE, 2020	CONTRACTOR	BHEL-PEM
				PAGE	1 of 4		

Sl.No	COMPONENT & OPERATIONS	CHARACTERISTICS	CATEGORY	TYPE OF CHECK	EXTENT OF CHECK	REFERENCE DOCUMENT	ACCEPTANCE NORMS	FORMAT OF RECORD	D*	AGENCY M	AGENCY C	AGENCY N	REMARKS
1	2	3	4	5	6	7	8	9		**	10		11
4.1	COMPLETELY ASSEMBLED HOIST	1. COMPLETENESS, CORRECTNESS, WELD QUALITY, OVERALL DIMENSIONS.	MA	VISUAL, MEAS	100%	APPD. DRG.	APPD. DRG.	MNFRS' TEST CERT.	√	P	W	V	CHP
4.2	ASSEMBLED HOIST PERFORMANCE WITH ACTUAL CONTROL PANEL, AND PENDENT PUSH BUTTON	1. LOAD TEST	CR	LOAD TEST at SWL	100%	IS:6547 / IS:39	IS:6547 / IS:3938	MNFRS' TEST CERT.	√	P	W	V	CHP
		2. HOISTING & LOWERING SPEED, PERFORMANCE OF CONTROLLERS SWITCHES CONTACTORS, RELAYS AND OTHER CONTROL DEVICES CORRELATIONS OF CIRCUITS AND INTERLOCKS AND SEQUENCES OF OPERATION , CURRENT MEASUREMENT,LIMIT SWITCH OPERATION.	CR	MEAS & VISUAL	100%	IS:3938, TECH SPEC.	TECH SPEC.	MNFRS' TEST CERT.	√	P	W	V	CHP
		3. OPERATION OF ALL PROTECTIVE DEVICES	CR	VISUAL	100%	TECH SPEC	TECH SPEC.	MNFRS' TEST CERT.	√	P	W	V	CHP
4.3	OVER LOAD TEST	OVER LOAD TEST INCLUDING HOLDING CAPACITY OF BRAKES, LIFTING LOAD FROM MID AIR, SOUNDNESS OF WELD AFTER OVERLOAD TEST.	CR	TEST AT 125 % OF-SWL	100%	IS:3938	IS:3938	INSPN. REPORT	√	P	W	V	CHP
5	PAINTING												
5.1	PRIMER & FINISHING AND SHADE	Examination - Shade , DOP by paper insertion method	MI	visual	100%	DRG. & DATA SHEET & RELV. IS SPEC.		MNFRS' TEST CERT.		P	V		
		DFT	MA	measurement	Sample					P	V		
6	PACKING	STURDINESS, PROTECTION MARKING	MA	VISUAL	100%	MFG STD	MFG STD			P			
	NOTE:												
1	When back wall echo is set to 100% in sound area then a) defect echo shall not exceed 20% b) Back echo shall be minimum 80% in any area.												
2	Less than 30 KW. Acceptance of motor less than 30 KW is based on COC of the manufacturer & the contractor confirming as follows : It is hereby confirmed that the above mentioned motor/motors was/were manufactured taking care of specific requirement regarding ambient temp, voltage & frequency variation, hot start, pull out torque, starting KVA/KW, temp rise, distance between centerof stud and gland plate and tested in accordance with approved drawing/data sheet.												

		LEGNDS			
		* RECORDS INDENTIFIED WITH 'TICK' SHALL BE ESSENTIALLY INCLUDED BY MANUFACTURER IN QA DOCUMENTATION.			
		** M: MANUFACTURER/SUBCONTRACTOR			
		C: BHEL/BHEL NOMINATED THIRD PARTY INSPECTION AGENCY			
MANUFACTURER/ SUB CONTRACTOR		N: CUSTOMER/CUSTOMER'S CONSULTANT/CUSTOMER'S APPOINTED THIRD PARTY			
		'P'- PERFORM", W"- WITNESS AND "V"- VERIFICATION			
SIGNATURE		" CHP" CUSTOMER HOLD POINT	REVIEWED BY	NAME & SIGN OF APPROVING AUTHORITY &SEAL	

BHEL	MANUFACTURER'S NAME & ADDRESS:	**MANUFACTURING QUALITY PLAN** **ITEM:** Chain Pulley Block **QP No.:** **REV**.:0, **Date.:** **PAGE**: 1 OF 4	**PROJECT: 2X660 MW THDC KHURJA TPS- TG & ASSOCIATE.** **PACKAGE: CHAIN PULLEY BLOCK**

Sr. No.	COMPONENT / OPERATION	CHARACTERISTICS	CLASS	TYPE OF CHECK	QUANTUM OF CHECK		REFERENCE DOCUMENT	ACCEPTANCE NORMS	FORMAT OF RECORD	AGENCY			REMARKS
					M	C/N				M	C	N	
1.	2.	3.	4.	5.	6.		7.	8.	9.	10.			11.
1	**RAW MATERIAL & B/OUT ITEMS:**												
1.1	HOOKS	CHEMICAL & MECH	MA	LAB ANALYSIS	ONE SAMPLE PER HEAT		MATERIAL SPECIFICATION AS PER APPROVED DRAWINGS.		MTC. ✓	P	V	V	
		MARK & IDENTIFICATION	MA	VISUAL	100%		HOOK TC FROM COMPETENT AUTHORITY		TC ✓	P	V	V	
		INTERNAL DEFECTS	MA	UT	100%		ASTM A-388	(REFER NOTE I)	IR ✓	P	V	V	ON SHANK PORTION
		PROOF LOAD TEST	MA	REVIEW	100%		IS 15560		TC ✓	P	V	V	
		NDT AFTER PROOF LOAD TEST	MA	DPT	100%		ASTM E-165	NO RELEVANT INDICATTION	TC ✓	P	V	V	
1.2	LOAD CHAIN	- DIMENSIONS	MA	MEASUREMENT	100%		APPD. DRGS	APPD. DRGS.	IR ✓	P	V	V	
		- BREAKING STR & % ELONGATION	MA	-TENSILE TEST	1/LOT		-DO-	-DO-	MTC ✓	P	V	V	
		- PROOF LOAD -HEAT TREATMENT	MA	-TENSILE TEST	100%		-DO-	-DO-	MTC ✓	P	V	V	
			MA	REVIEW	100%		-DO-	-DO-	HT CHRT ✓	P	V	V	
		-GRADE	MA	REVIEW	1/BATCH		-DO-	-DO-	MTC ✓	P	V	V	

MANUFACTURER / CONTRACTOR SUB-CONTRACTOR SIGNATURE	LEGEND: ** M : MANUFACTURER / SUB-SUPPLIER C : BHEL / NOMINATED INSPECTION AGENCY. N : CUSTOMER/ NOMINATED INSPECTION AGENCY. INDICATE "P" PERFORM "W" WITNESS AND "V" VERIFICATION	FOR CUSTOMER USE REVIEWED BY	NAME & SIGN OF APPROVING AUTHORITY & SEAL

MANUFACTURER'S NAME & ADDRESS:	**MANUFACTURING QUALITY PLAN** **ITEM:** Chain Pulley Block **QP No.:** **REV**.:0, **Date.:** **PAGE**: 2 OF 4	**PROJECT: 2X660 MW THDC KHURJA TPS- TG & ASSOCIATE.** **PACKAGE: CHAIN PULLEY BLOCK**

Sr. No.	COMPONENT / OPERATION	CHARACTERISTICS	CLASS	TYPE OF CHECK	QUANTUM OF CHECK		REFERENCE DOCUMENT	ACCEPTANCE NORMS	FORMAT OF RECORD		AGENCY			REMARKS
					M	C/N					M	C	N	
1.	2.	3.	4.	5.	6.		7.	8.	9.		10.			11.
1.3	RAW MATL. (BAR /FORGING) FOR GEAR BLANKS/SHAFTS/ PINIONS/AXLE/ RATCHET PAWL / RATCHET WHEEL & PLATES FOR FABRICATION ETC	CHEMICAL COMPOSITION	MA	Review	ONE SAMPLE PER HEAT		Material specification as per approved drawings.		MFR'S TC	✓	P	V	V	TC or inspection report for components shall be given.
		MECHANICAL	MA	Review						✓	P	V	V	
		INTERNAL DEFECTS	MA	UT	100%		ASTM A-388 REFER NOTE 1		IR	✓	P	V	V	For rounds ≥50mm and plates ≥25 mm.
		NDT AFTER MACHINING	MA	DPT	100%		ASTM E-165 NO RELEVANT INDICATION		TC	✓	P	V	V	
1.4.	LOAD CHAIN WHEELS	- CHEMICAL & MECHANICAL PROPERTIES	MA	CHEMICAL MECHANICAL PROPERTIES	ONE SAMPLE PER LOT		APPD. DRG.	APPD. DRG.	MTC	✓	P	V	V	
1.5	BEARINGS	MAKE, TYPE, CATALOUGE NO.	MA	VISUAL	RANDOM		APP DRG / MFR"S CATALOGUE	APP DRG / MFR"S CATALOGUE	IR	✓	P	V	V	
1.6	HAND CHAIN WHEEL	CHEMICAL MECHANICAL PROPERTIES	MA	CHEMICAL MECHANICAL PROPERTIES	ONE SAMPLE PER LOT		AS PER DRAWING	AS PER DRAWING	MTC	✓	P	V	V	
1.7	HAND CHAIN	GRADE/ DIMENSION	MA	GRADE DIMENSION	100%		AS PER DRAWING	AS PER DRAWING	MTC	✓	P	V	V	

	LEGEND:	FOR CUSTOMER USE	
MANUFACTURER / CONTRACTOR SUB-CONTRACTOR SIGNATURE	** M : MANUFACTURER / SUB-SUPPLIER C : BHEL / NOMINATED INSPECTION AGENCY. N : CUSTOMER/ NOMINATED INSPECTION AGENCY. INDICATE "P" PERFORM "W" WITNESS AND "V" VERIFICATION	REVIEWED BY	NAME & SIGN OF APPROVING AUTHORITY & SEAL

BHEL	MANUFACTURER'S NAME & ADDRESS:	**MANUFACTURING QUALITY PLAN** **ITEM:** Chain Pulley Block **QP No.:** **REV**.:0, **Date.:** **PAGE**: 3 OF 4	**PROJECT: 2X660 MW THDC KHURJA TPS- TG & ASSOCIATE.** **PACKAGE: CHAIN PULLEY BLOCK**

Sr. No.	COMPONENT / OPERATION	CHARACTERISTICS	CLASS	TYPE OF CHECK	QUANTUM OF CHECK		REFERENCE DOCUMENT	ACCEPTANCE NORMS	FORMAT OF RECORD		AGENCY			REMARKS
					M	C/N					M	C	N	
1.	2.	3.	4.	5.	6.		7.	8.	9.		10.			11.
1.8	TROLLEY GEARS, PINION,WHEELS, AXLE	CHEMICAL & MECHANICAL	MA	LAB ANALYSIS,	100%		APPVD DRGS	APPVD DRGS	IR/TC	✓	P	V	V	
2	**IN PROCESS**													
2.1	RATCHET PAWL / RATCHET WHEEL	-HARDNESS -SURFACE CRACK	MA MA	HARDNESS DPT	100% 100 %		IS:3832/ APPD DRG. ASTM E165	IS:3832/ APPD. DRG. NO DEFECT	IR IR	✓ ✓	P P	V V	V V	
2.2	COMPONENTS AFTER HARDFACING & MACHINING	HEAT TREATMENT SURFACE HARDNESS SURFACE CRACK DIMENSION	MA MA MA MA	HT CHART HARDNESS DPT FOR SURFACE CRACK MEASURE	100% 10% 100% 10%		IS 1875/IS 4367/IS 3832 --DO-- ASTM E 165 IS 3832	 NO DEFECT 	IR IR IR IR	✓ ✓ ✓ ✓	P P P P	V V V V	V V V V	
3.0	**FINAL INSPECTION**													
3.1	COMPLETE ASSEMBLY	OVERALL DIMENSION ENDURANCE TYPE TEST OPERATIONAL PROOF LOAD & LIGHT LOAD TEST, EFFORT.	CR MA CR	MEASUREMENT TYPE TEST LOAD TEST	100 % 1 PER SIZE 100%		IS:3832 /APPD DRG IS 3832 -DO-	IS:3832 /APPD DRG IS 3832 -DO-	IR TC IR	✓ ✓ ✓	P P P P	W V W W	V V V V	

	LEGEND: ** M : MANUFACTURER / SUB-SUPPLIER C : BHEL / NOMINATED INSPECTION AGENCY. N : CUSTOMER/ NOMINATED INSPECTION AGENCY. INDICATE "P" PERFORM "W" WITNESS AND "V" VERIFICATION	FOR CUSTOMER USE	
MANUFACTURER / CONTRACTOR SUB-CONTRACTOR SIGNATURE		REVIEWED BY	NAME & SIGN OF APPROVING AUTHORITY & SEAL

BHEL	MANUFACTURER'S NAME & ADDRESS:	**MANUFACTURING QUALITY PLAN** **ITEM:** Chain Pulley Block **QP No.:** **REV**.:0, **Date.:** **PAGE**: 4 OF 4	**PROJECT: 2X660 MW THDC KHURJA TPS- TG & ASSOCIATE.** **PACKAGE: CHAIN PULLEY BLOCK**

Sr. No.	COMPONENT / OPERATION	CHARACTERISTICS	CLASS	TYPE OF CHECK	QUANTUM OF CHECK		REFERENCE DOCUMENT	ACCEPTANCE NORMS	FORMAT OF RECORD		AGENCY			REMARKS
					M	C/N					M	C	N	
1.	2.	3.	4.	5.	6.		7.	8.	9.		10.			11.
		HEIGHT OF LIFT	MA	VISUAL	100 %		-DO-	-DO-	IR	✓	P	W	V	
		SWIVELING OF HOOK	MA	VISUAL	100%		APPROVED DRG	APPROVED DRG	IR	✓				
		EFFORT	MA	PULL ON CHAIN	100%		-DO-	-DO-	IR	✓	P	W	V	
3.2	PAINTING	-CLEANING - SHADE & DFT OF PAINT	MA MI	VISUAL VISUAL	AT RANDOM AT RANDOM		APPROVED DRAWING/ **SPECIFICATION**	APPROVED DRAWING/ **SPECIFICATION**	IR IR		P - p	--- W	-- ---	
3.3	NAME PLATE	VERIFICATION	MA	VISUAL	100%				IR		P	V	---	
3.4	PACKING	-VERIFICATION	MI	VISUAL	100%		SPECS.	SPECS.	IR		P	---	---	
3.5	REVIEW OF QA DOCUMENTATION	VERIFICATION	MA	VISUAL	100%		APPD. QP	APPD. QP		✓	V	V	V	

CR – CRITICAL, MA – MAJOR , MI – MINOR

NOTE 1: WHEN BACK WALL ECHO (BWE) IS SET AT 100% OF FULL SCREEN HEIGHT (FSH) IN DEFECT FREE AREA THEN
(A) DEFECT ECHO SHALL NOT EXCEED 20% OF FSH &
(B) BWE SHOULD BE MINIMUM 80% OF FSH IN ANY AREA.
NOTE 2: RECORDS IDENTIFIED WITH TICK SHALL BE ESSENTIALLY INLCUDED IN QA DOCUMENTATION.

MANUFACTURER / CONTRACTOR SUB-CONTRACTOR	LEGEND: ** M : MANUFACTURER / SUB-SUPPLIER C : BHEL / NOMINATED INSPECTION AGENCY. N : CUSTOMER/ NOMINATED INSPECTION AGENCY. INDICATE "P" PERFORM "W" WITNESS AND "V" VERIFICATION	FOR CUSTOMER USE	
SIGNATURE		REVIEWED BY	NAME & SIGN OF APPROVING AUTHORITY & SEAL

REV: 00 DATE:

STANDARD ELECTRICAL SCOPE BETWEEN BHEL AND VENDOR (FOR EPC PROJECTS)

PACKAGE: ELECTRIC HOIST FOR CPU
PROJECT: 2X660 MW THDC KHURJA TPS- TG & ASSOCIATE PKG.
SCOPE OF VENDOR: SUPPLY, ERECTION & COMMISSIONING OF VENDOR'S EQUIPMENT.

S. NO	DETAILS	SCOPE SUPPLY	SCOPE E&C	REMARKS
1	Isolating Switch	Vendor	Vendor	BHEL will provide one number 415 V (3ph, 3W) supply feeder only up to isolating switches for cranes. Any other voltage level (AC/DC) required will be derived by the vendor. Motor starter shall be part of crane control panel.
2	Power cables, control cables, screened control cables and any special cables (if required) between equipment supplied by vendor.	Vendor	Vendor	Cable from supply feeder to isolating switch shall be in BHEL scope.
3	Cabling material (cable trays, accessories, cable tray supporting system, conduits etc).	Vendor	Vendor	
4	Equipment Earthing	Vendor	Vendor	All equipment metallic enclosures / frames, metal structure etc. shall be grounded at two points each to the nearest grounding points / risers provided by BHEL.
5	Motors	Vendor	Vendor	
6	Cable glands and lugs for equipment supplied by vendor	Vendor	Vendor	1. Double compression Ni-Cr plated brass cable glands 2. Solder less crimping type heavy duty tinned copper lugs for power & control cables.
7	a) Input cable schedules (C & I) b) Cable interconnection details for above c) Cable block diagram	Vendor Vendor Vendor	- - -	Cable listing for Control and Instrumentation Cable in enclosed excel format shall be submitted by vendor during detailed engineering stage.
8	Equipment layout drawings	Vendor	-	
9	Electrical Equipment GA drawing	Vendor	-	For necessary interface review.

714406/2022/PS-PEM-MAX

	TITLE:	BHEL DOCUMENTS NO.: PE-TS-475-155-A001	
	TECHNICAL SPECIFICATION FOR CONDENSATE POLISHING UNIT	VOLUME IIB	
		SECTION – IIA	
	2X660 MW KHURJA STPP	REV. NO. 00	DATE:

GENERAL TECHNICAL REQUIREMENT OF PUMPS

Annexure-I to ECW system Specification

GENERAL SPECIFICATION FOR HORIZONTAL PUMPS

(1) **SCOPE**

This specification covers the design, material, construction features, manufacture, inspection, testing the performance at the Vendor's/Sub-Vendor's Works and delivery to site of Horizontal Centrifugal Pumps.

(2) **CODES AND STANDARDS**

The design, material, construction, manufacture inspection and performance testing of Horizontal Centrifugal Pumps shall comply with all currently applicable statutes, regulations and safety codes in the locality where the Equipment will be installed. Nothing in these specifications shall be construed to relieve the Vendor of this responsibility. The Equipment supplied shall comply with the latest applicable Indian Standards listed below. Other National Standards are acceptable, if they are established to be equal or superior to the Indian Standards.

(3) **LIST OF APPLICABLE STANDARDS**

IS : 1520	:	Horizontal Centrifugal Pumps for clear cold fresh water
IS : 5120	:	Technical requirements of rotodynamic special purpose pumps
API : 610	:	Centrifugal pumps for general refinery service.
IS : 5639	:	Pumps Handling Chemicals & corrosion liquids
IS : 5659	:	Pumps for process water
HIS	:	Hydraulic Institute Standards, USA
ASTM-1-165-65:		Standards Methods for Liquid Penetration Inspection.

In case of any contradiction with aforesaid standards and the stipulations as per the technical specifications as specified hereinafter the stipulations of the technical specifications shall prevail.

(4) **DESIGN REQUIREMENTS**

(a) The Pump shall be capable of developing the required total head at rated capacity for continuous operation. Also the pumps shall be capable of being operated to give satisfactory performance at any point on the HQ characteristics curve. The operating range of the pump shall be 40% to 120% of the duty point unless otherwise mentioned elsewhere. The maximum efficiency of pump shall preferably be within ± 10% of the rated design flow as indicated in data sheets.

(b) The total head capacity curve shall be continuously rising from the operating point towards shut – off without any zone of instability with the highest head at shut-off condition. Shut-off head shall be more than the rated design head and the percentage variation may vary depending on the specific speed of the pumps (i.e) 10-15% for

pumps of specific speed upto1000 US units, about 15 to 20% for specific speed in the range of 1000 to 2000 US units, about 20% to 40% for specific speed of 2000 to 4000 US units and above 50% for specific speed of 4000 to 7000 US Units

(c) Pumps of a particular category shall be identical and shall be suitable for parallel operation with equal load division. The head Vs capacity and BHP Vs capacity characteristics should match to ensure even load sharing and trouble free operation throughout the range. Components of identical pumps shall be interchangeable.

(d) Pumps shall run smoothly without undue noise and vibration. Peak to peak vibration limits shall be restricted to the following values during operation:

Speed	Antifriction Bearing	Sleeve Bearing
1500 rpm and below	75.0 micron	75.0 micron
3000 rpm	50.0 micron	65.0 micron

The noise level shall not exceed 85 dBA overall sound pressure level reference 0.0002 microbar (the standard pressure reference for air sound measurement) at a distance of 1 M from the equipment surface.

(e) The pumps shall be capable of starting with discharge valve fully open and close condition. Motors shall be selected to suit to the above requirements.

(f) Pumps shall be so designed that pump impellers and other accessories of the pumps are not damaged due to flow reversal.

(g) The Contractor under this specification shall assume full responsibility in the operation of pump and motor as a unit.

(5) **DESIGN CONSTRUCTION**

(a) Design and construction of various components of the pumps shall conform to the following general specifications. For material of construction of the components, data sheets shall be referred to.

(b) Pump Casing

Pump casing shall have axially or radially split type construction as specified. The casing shall be designed to withstand the maximum shut-off pressure developed by the pump at the pumping temperature.

Pump casing shall be provided with a vent connection and piping with fittings & valves. Casing drain as required shall be provided complete with drain valves, piping and plugs. It shall be provided with a connection for suction and discharge pressure gauge as standard feature. It shall be structurally sound to provide housing for the pump assembly and shall be designed hydraulically to minimum radial load at part load operation.

(c) Impeller

Impeller shall be closed, semi-closed or open type as specified elsewhere and designed in conformance with the detailed analysis of the liquid being handled.

The impeller shall be secured to the shaft, and shall be retained against circumferential movement by keying, pinning or lock rings. On pumps with overhung shaft, impellers shall be secured to the shaft by a lockout or cap screw which tightness in the direction of normal rotation.

(d) Impeller/Casing Wearing Rings

Replaceable type wearing rings shall be provided at suitable locations of pumps as per manufacturer's standard practice. Suitable method of locking the wearing ring shall be used.

(e) Shaft

The critical speed shall be well away from the operating speed and in no case less than 130% of the rated speed.

The shaft shall be ground and polished to final dimensions and shall be adequately sized to withstand all stresses from rotor weight, hydraulic loads, vibration and torques coming in during operation.

(f) Shaft Sleeves

Renewable type fine finished shaft sleeves shall be provided at the stuffing boxes/mechanical seals. Length of the shaft sleeves must extend beyond the outer faces of gland packing of seal end plates so as to distinguish between the leakage between shaft and shaft sleeve and that past the seals/gland.

Shaft sleeves shall be fastened to the shaft to prevent any leakage or loosening. Shaft and shaft sleeve assembly should ensure concentric rotation.

(g) Bearings

Heavy duty bearings, adequately designed for the type of service specified in the enclosed pump data sheet and for long, trouble free operation shall be furnished.

The bearings offered shall be capable of taking both the radial and axial thrust coming into play during operation. In case, sleeve bearings are offered additional thrust bearings shall be provided. Antifriction bearings of standard type, if provided, shall be selected for a minimum life 20,000 hrs. of continuous operation at maximum axial and radial loads and rated speed.

Proper lubricating arrangement for the bearings shall be provided. The design shall be such that the bearing lubricating element does not contaminate the liquid pumped. Where there is a possibility of liquid entering the bearings suitable arrangement in the form of deflectors or any other suitable arrangement must be provided ahead of bearings assembly.

Bearings shall be easily accessible without disturbing the pump assembly. A drain plug shall be provided at the bottom of each bearings housing.

(h) Stuffing Boxes

Stuffing boxes of packed ring construction type shall be provided wherever specified. Packed ring stuffing boxes shall be properly lubricated and sealed as per service requirements and manufacturer's standards. If external gland sealing is required, it

shall be done from the pump discharge. The Bidder shall provide the necessary piping valves, fittings etc. for the gland sealing connection.

(i) Mechanical Seals

Wherever specified in pump data sheet, mechanical seals shall be provided. Unless otherwise recommended by the tenderer, mechanical seals shall be of single type with either sliding gasket or bellows between the axially moving face and shaft sleeves or any other suitable type. The sealing faces should be highly lapped surfaces of materials known for their low frictional coefficient and resistance to corrosion against the liquid being pumped.

(j) The pump supplier shall coordinate with the seal maker in establishing the seal chamber of circulation rate for maintaining a stable film at the seal face. The seal piping system shall form an integral part of the pump assembly. For the seals under vacuum service, the seal design must ensure sealing against atmospheric pressure even when the pumps are not operating. Necessary provision for seal water supply along with complete piping fittings and valves as required shall form integral part of pump supply.

(k) Pump Shaft Motor Shaft Coupling

The pump and motor shafts shall be connected with an adequately sized flexible coupling of proven design with a spacer to facilitate dismantling of the pump without disturbing the motor. Necessary coupling guards shall also be provided.

(l) Base Plate

A common base plate mounting both for the pump and motor shall be furnished. The base plate shall be fabricated steel and of rigid construction, suitably ribbed and reinforced. Base plate and pump supports shall be so constructed and the piping unit so mounted as to minimise misalignment caused by mechanical forces such as normal piping strain, internal differential thermal expansion and hydraulic piping thrust. Suitable drain troughs and drip lip shall be provided.

(m) Assembly and Dismantling

Assembly and dismantling of each pump with drive motor shall be possible without disturbing the grouting base plate or alignment.

(n) Drive Motor (Prime Mover)

Continuous Motor rating (at 50 0 C ambient) shall be at least ten percent (10%) above the maximum load demand of the pump in the entire operating range to take care of the system frequency variation and in no case less than the maximum power requirement at any condition of the entire characteristic curve of the pump. The KW rating of the drive unit shall be based on continuously driving the connected equipment for the conditions specified. However, in cases where parallel operation of the pumps are specified, the actual motor rating is to be selected by the Bidder considering overloading of the pumps in the event of tripping of operating pump(s).

Annexure-2 to ECW system Specification

SUBMERSIBLE PUMPS

1.00.00 **SCOPE**

1.01.00 This specification covers general requirements in respect of design, material, manufacture, construction, testing & inspection at Vendor's / sub-vendor's delivery to site, of submersible pumps.

2.00.00 **CODES AND STANDARD**

The design manufacture and performance of submersible pumps shall be comply with all currently applicable statues, regulation, and safely codes in the locality where the Equipment will be installed. The Equipment shall also conform to the latest applicable Indian standards listed below other Nation Standards are acceptable, if they are established to be equal or superior to the listed standards. Nothing in these specifications shall be construed to relieve the contractor of this responsibility.

2.01.00 **List of Applicable Indian Standards**

IS:8034 - Submersible pumps for clear cold fresh water

IS:5120 - Technical requirement of Rotodynamic Special Purpose pumps.

In case of any contradiction with aforesaid standards and the stipulations as per technical specification as specified hereinafter the stipulation of the technical specification shall prevail.

3.00.00 **DESIGN AND PERFORMANCE REQUIREMENTS**

a) The pump shall be of single stage mono - block type with non-clog design.

b) Components of Identical pumps shall be interchangeable.

c) Pumps shall have a continuously rising head characteristics.

4.00.00 **MOTOR RATING**

Continuous motor rating (at 50 deg. C ambient) for pumps shall be atleast ten percent (10%) above the maximum load demand of the driven equipment in the complete operating range to take care of the system frequency variations.

5.00.00 **FEATURES OF CONSTRUCTION**

a) Pumps shall be of Submersible, wet pit type.

b) Pumps shall be able to pass through solids upto 40 mm and capable of handling waste water which may contain, sludge, plastic solids etc.

c) Coupling device shall ensure leak proof joint between the pump and discharge elbow. This shall also enable pump to be removed from the sumps without the necessity of dismantling any nuts, bolts etc.

d) Pumps shall be portable type and capable of using in any sump as and when required. Pump shall be provided with required stool, flexible, hoses chain connection etc. for easy installation, removal and maintenance. Adequate length of chain required for lowering the pump into the sump and flexible type discharge pipe shall be provided.

e) Impeller

Impeller type shall be open/semi-closed type/closed as indicated elsewhere. Enclosed impellers shall be equipped with seal rings on their hubs. In case of open impeller, the pump shall be design to take care of the additional thrust produced.

6.00.00 **MOTOR**

i) Motor shall be coupled directly to the impeller shaft.

ii) The motor shall be suitable for operation when submersed in water. The housing shall have required degree of protection.

iii) Necessary arrangement to be made to make cable entry absolutely water tight, with cores cast in insulation along with cable gland 'O' ring seat.

iv) Built in temperature sensors are to be provided to enable tipping of motor if temperature rises above the design temperature limit. These sensors are to be used directly in the circuiting of control panel. The control circuit should trip the motor if the temperature rises beyond safe limits.

v) Moisture sensors are to be embedded in motor chamber to trip the motor in case of moisture entry in motor due to failure of pump mechanical seal.

vi) Motor shall be oil filled/oil lubricated or water filled type. Pressure equalizing diaphragm and sand guards with seal shall be provided to prevent the water and sand entering the motor.

vii) Power supply to the motor and control connections shall be preferably combined in one cable and shall be flexible copper conductor PVC insulated, armoured and overall hard grade PVC sheathed, and suitable for under water service. The cable gland shall be properly sealed to prevent entry of pumped liquid the motor. Length of the cable shall be of suitable for site conditions. The cable shall be terminated on the control panel with necessary facility to terminate with the power receptacle.

viii) For pumps which are specified under portable application, Cable shall be suitable for continuous winding/un winding duty on a cable reeling drum and shall be installed on a trolley mounted on wheels. Associated control panel is also to be mounted on the trolley.

ix) Water level controller shall be provided which should be with two level controls, high to start and low to stop.

7.00.00 **Equipment Data Sheet**

Type of pump	:	Submersible type fixed inside pits/ sump with guides /lifting chains
Type of Working Fluid	:	Drains with particle size upto 40 mm

Type of impeller		:	Open
Type of lubrication		:	Self / Grease / Oil
Speed		:	Preferrably 1500 rom (maximum)
Material of Construction			
a)	Casing	:	2% Nickel Cast Iron, IS:210 Grade FG 260;
b)	Impeller	:	SS-316 / CF8M
c)	Shaft	:	SS- 410
d)	Bolts & nuts	:	SS-316
e)	Accessories	:	Suction Strainer, Pump stand, Adaptors for discharge flange, Level measuring devices/ Controllers, Lifting hook & chain Handle to agitate debris etc, Discharge hose connected with piping upto the drains etc.

f) The discharge, suction /column pipes shall be heavy grade Carbon steel externally lined with epoxy or galvanised.

Annexure-3 to ECW system Specification

VERTICAL SUMP PUMPS

1.00.00 **Equipment Data Sheet**

Type of pump	:	Vertical (volute type casing) sump pump with column pipe, discharge flange etc.
Type of Working Fluid	:	Drains with particle size upto 40 mm
Type of impeller	:	Open
Type of lubrication	:	Self / Grease / Oil
Speed	:	Preferably 1500 rpm (maximum)

Material of Construction

a)	Casing	:	2% Nickel Cast Iron, IS:210 Grade FG 260;
b)	Impeller	:	SS-316 / CF8M
c)	Shafts	:	SS- 410
d)	Column pipe	:	Carbon steel as per IS:2062
e)	Discharge pipe	:	Carbon steel as per IS:2062
f)	Stuffing box	:	2% Nickel CI,IS:210 Grade FG 260;
g)	Gland	:	2% Nickel CI,IS:210 Grade FG 260;
h)	Bolts & nuts	:	SS-316
i)	Accessories	:	Suction Strainer, Level measuring devices/ Controllers etc.

Note - In case of MOC of Pump (Horizontal/ Vertical) mentioned in Section IA Datasheet A then, same shall prevail.

PRE-COMMISSIONING AND COMMISSIONING

KHURJA SUPER THERMAL POWER PROJECT (2X660 MW) TURBINE GENERATOR AND ASSOCIATED PACKAGES BID DOC. NO.: THDC/RKSH/CC-9915-371	SEPARATOR

CLAUSE NO.	Bidder to refer the relevant portion with respect to CPU TECHNICAL REQUIREMENTS
	PRE-COMMISSIONING ACTIVITIES, COMMISSIONING OF FACILITIES AND INITIAL OPERATIONS
1.00.00	**GENERAL**
1.01.00	The pre-commissioning and commissioning activities including Guarantee tests, checks and initial operations of the equipment furnished and installed by the Contractor shall be the responsibility of the Contractor as detailed in relevant clauses in Technical Specification. The Contractor shall provide, in addition, test instruments, calibrating devices, etc. and labour required for successful performance of these operations. If it is anticipated that the above test may prolong for a long time, the Contractor's workmen required for the above test shall always be present at Site during such operations.
1.02.00	It shall be the responsibility of the Contractor to provide all necessary temporary instrumentation and other measuring devices required during start-up and initial operation of the equipment systems which are installed by him. The Contractor shall also be responsible for flushing & initial filling of all oils & lubricants required for the equipment furnished and installed by him so as to make such equipment ready for operation. The Contractor shall be responsible for supplying such flushing oil and other lubricants unless otherwise specified elsewhere in these specifications & documents.
1.03.00	The Contractor upon completion of installation of equipments and systems, shall conduct precommissioning and commissioning activities, to make the facilities ready for sustained safe, reliable and efficient operation. All precommissioning/ commissioning activities considered essential for such readiness of the facilities including those mutually agreed and included in the Contractors quality assurance programme as well as those indicated in clauses elsewhere in the technical specifications shall be performed by the Contractor.
2.00.00	**TESTING / COMMISSIONING SCHEDULE** The Contractor shall submit to the Employer, his testing/ commissioning schedules for various equipments/ systems covered under the contract, for approval, at least 18 months before the actual commissioning of the equipment/ systems. The testing/ commissioning schedule is required to be of a standard format in order to maintain consistency of presentation, content and reporting. The list of documents and commissioning checks to be submitted and their content details shall be agreed upon during preaward discussions. The list of model commissioning documents viz. standard checklists, testing/ commissioning schedules, commissioning tests and checks and the details regarding contents of testing/ commissioning schedule are indicated in this chapter. These schedules are indicative only. (i) Testing Schedules & Commissioning Schedules. (ii) Standard Checklist of Items.

CLAUSE NO.	Bidder to refer the relevant portion with respect to CPU TECHNICAL REQUIREMENTS

(iii) Commissioning Test and checks

(iv) Brief write-up on Contents of Testing Schedule.

(v) Demonstration/Acceptance test procedures during Commissioning/Initial operation

Procedures/ Schedule shall be approved by the Employer.

3.00.00 PRECOMMISSIONING & COMMISSIONING ACTIVITIES

3.01.00 **General**

The pre-commissioning activities including some of the important checks & tests for certain major equipment/ systems (as a minimum) are described below, although it is the Contractor's responsibility to draw up a detailed sequential & systematic list of checks / tests and various activities / procedures connected with pre-commissioning of the complete facilities with all systems, sub-systems and equipment supplied and installed by him and get the same approved by the Employer.

3.02.00 **DEMONSTRATION DURING COMMISSIONING**

The following test shall be demonstrated during commissioning for which the bidder has to furnish the procedure and get the approval of employer.

3.02.01 **Start-up, Loading, Unloading and Shutdown Capabilities (For Turbine Generator)**

(i) **Unit Start Up**

Start-up time (upto full load), and loading capabilities for the Turbine Generator together for cold start conditions (greater than 36 hours shutdown), warm start conditions (between 8 and 36 hours shutdown) and hot start conditions (less than 8 hours shutdown) as indicated by the Contractor in the offer and accepted by the EMPLOYER shall be demonstrated, ensuring that the various turbine operational parameters like vibration, absolute and differential expansion, eccentricity and steam-metal temperature mismatch etc. are within design limits.

(ii) Sudden Total Loss of External Load

On occasions, the steam turbine generator unit may experience sudden total loss of all external load. Under these conditions, the steam turbine generator unit shall not trip but shall continue to be in operation under the control of its speed governor to supply power for the plant auxiliary load with HP-LP bypass in operation while staying within the agreed limits of steam to metal temperature mismatch, exhaust hood temperature, absolute and differential expansion, vibration and eccentricity. The same shall be

CLAUSE NO.	Bidder to refer the relevant portion with respect to CPU **TECHNICAL REQUIREMENTS**

demonstrated. Further, the provisions of Part-B, Section-VI, shall also be complied with.

(iii) **Steam Metal Temperature Mismatch Limitation**

The steam-metal temperature differential for cold, warm and hot start up , loading / unloading and shutdown conditions shall be within the permissible limits indicated by the Bidder in the offer and accepted by the Employer.

3.02.02 **Turbine Generator Set Capability**

The steam turbine generator unit shall be capable of delivering at generator terminals the output as indicated by the BIDDER in the heat balances submitted alongwith his bid, under the following conditions.

(a) Maximum continuous output at generator terminals corresponding to both strings of HP heaters out of operation, under rated steam conditions, at a condenser pressure of 89 mm of Hg (Abs) and 3% make up& Aux. Steam requirement tapped from CRH, generating not less than the rated output OR output corresponding to design BMCR heat duty, whichever is less without overstressing turbine components.

(b) Demonstration of minimum ramp rate of 5% per minute above the control load (i.e. 50% MCR).

NOTE: While conducting the tests of (a) above the condenser pressure measurement shall be done at 300mm above the top row of condenser tubes.

3.02.03 **Turbine Auxiliaries**

(i) **H.P./L.P. Bypass Capabilities**

The HP & LP Bypass system should satisfy the following functional requirements under automatic interlock action. It should come into operation automatically under the following conditions :

(a) Generator circuit breaker opening.

(b) HP - IP stop valves closing due to turbine tripping.

(c) Sudden reduction in demand to house load.

Under all these conditions, while passing the required steam flows as per the relevant heat balances, the condenser should be able to swallow the entire steam without increasing the exhaust hood temperature and condenser pressure beyond the maximum permissible value indicated by the BIDDER in his offer and accepted by the EMPLOYER. The same shall be demonstrated.

CLAUSE NO.	Bidder to refer the relevant portion with respect to CPU **TECHNICAL REQUIREMENTS**

(ii) **Steam Condensing Plant for main turbine**

(a) Temperature of condensate, at outlet of condenser, shall not be less than saturation temperature corresponding to the condenser pressure at all loads.

(b) Oxygen content in condensate, at hotwell outlet, shall not exceed 0.015 CC per litre over the entire load range and shall be determined according to calorimetric Indigo - Carmine method.

(c) Air leakage in the condenser under full load condition shall not exceed more than 50% of design value taken for sizing the condenser air evacuation system.

(d) When one half of the condenser is isolated, condenser shall be capable of taking at least 60% T.G. load under EMCR conditions.

(e) The capacity of each vacuum pump in free dry air under standard conditions at a condenser pressure of 25.4 mm Hg (abs) and sub cooled to 4.17 deg.C below the temperature corresponding to absolute suction pressure shall not be less than 20 SCFM. Correction curves for establishing the capacity at site conditions shall also be furnished.

(f) The air and vapour mixture from air cooling zone of condenser shall be 4.17 deg.C below the saturation temperature corresponding to 25.4 mm Hg (abs) suction pressure. Correction curves for establishing the same at site conditions shall also be furnished.

(g) Condenser on load tube cleaning system life of sponge rubber balls & Number of balls lost during 1000 hrs of plant operation shall be as indicated by bidder in the offer & accepted by the Employer.

(iii) **Steam Condensing Plant for drive turbine condenser (if envisaged)**

(a) Temperature of condensate, at outlet of condenser, shall not be less than saturation temperature corresponding to the condenser pressure at all loads.

(b) Air leakage in the condenser under full load condition shall not exceed more than 50% of design value taken for sizing the condenser air evacuation system.

(c) The capacity of each vacuum pump in free dry air under standard conditions at a condenser pressure of 25.4 mm Hg (abs) and sub cooled to 4.17 deg.C below the temperature corresponding to absolute suction pressure shall be demonstrated. Correction curves for establishing the capacity at site conditions shall also be furnished.

CLAUSE NO.	Bidder to refer the relevant portion with respect to CPU **TECHNICAL REQUIREMENTS**

(d) The air and vapour mixture from air cooling zone of condenser shall be 4.17 deg.C below the saturation temperature corresponding to 25.4 mm Hg (abs) suction pressure. Correction curves for establishing the same at site conditions shall also be furnished.

(iv) **Feed water heaters & Deaerator**

(a) TTD's and DCA's of feed water heaters in line with 660 MW TMCR heat balance shall be demonstrated.

(b) Difference between saturation temperature of steam entering the deaerator and temperature of feed water leaving deaerator.

(c) Dissolved O2 content in Deaerator effluent at deaerator outlet without chemical dosing at all loads, not to exceed 0.005 CC/litre determined as per ASTM-D--5543-09 or Indigo Carmine method.

(vi) **Condensate Extraction Pumps**

(a) Each CEP set shall be capable of delivering flow & total dynamic head corresponding to runout point as specified.

(b) The vibration, noise level and parallel operation of any two of the three pumps shall be demonstrated.

(vii) **Drip Pumps (if envisaged)**

(a) Each drip pump shall be capable of delivering flow & total dynamic head corresponding to design point as specified.

(b) The vibration and noise level shall be demonstrated.

(viii) **Boiler feed pumps**

(a) Each boiler feed pump set shall be capable to deliver flow and total dynamic head corresponding to runout point as specified elsewhere.

(b) The vibration, noise level and parallel operation of any two of the three pumps shall be demonstrated as per specification requirements.

(c) Cold start up / hot start up of the unit using TDBFP with motive steam from auxiliary steam header.

3.02.04 **Balance Pumps, Blowers, Fans, Compressors and rotating equipment.**

a) The vibration, noise level and parallel operation, wherever applicable, of the pumps, blowers, fans, compressors and rotating equipment shall be demonstrated.

CLAUSE NO.	Bidder to refer the relevant portion with respect to CPU TECHNICAL REQUIREMENTS

b) Pumps, blowers, fans, compressors and rotating equipment shall be capable of delivering flow and head corresponding to design point as specified.

3.02.05 **Pre-commissioning & Commissioning activities requiring approval of the employer:**

(a) Hydraulic Test for STG integral piping, heat exchangers, condenser tubes & condenser, equipment cooling water system pipes and associated equipment etc. shall be done. The hydraulic test of other piping system as per statutory requirement and specified elsewhere shall also be carried out. All equipment needed for the tests shall be furnished by the Contractor.

(b) Oil flushing of lube oil system, control & jacking oil system, etc. for turbines shall be done. Entire flushing oil requirement & refilling with fresh oil and other consumables along with flushing equipment shall be met by the Contractor.

(c) High Pressure/Low Pressure (HP/LP) bypass tests, vacuum tightness test as per approved procedures shall be done by the Contractor after arranging & lining up of all the necessary equipment by him.

(d) Steam blowing & chemical cleaning, as applicable of integral piping of the turbo-generator, Low pressure piping, Power cycle piping & other piping in the scope of the Contractor shall be done by the Contractor.

(e) Steam blowing & chemical cleaning, as applicable of integral piping of CEP sets & other piping in the scope of the Contractor shall be done by the Contractor.

(f) All tests and activities pertaining to the CEP and its drive as per manufacturer's recommendations and as given in the chapter and covered in the specification.

(g) Steam blowing & chemical cleaning, as applicable of integral piping of Drip Pump sets & other piping (if applicable) in the scope of the Contractor shall be done by the Contractor.

(h) All tests and activities pertaining to the Drip Pump and its drive (if applicable) as per manufacturer's recommendations and as given in the chapter and covered in the specification.

(i) Steam blowing & chemical cleaning, as applicable of integral piping of the Heaters & other components in the scope of the Contractor shall be done by the Contractor.

(j) All tests and activities pertaining to the Heater as per manufacturer's recommendations and as given in the chapter and covered in the specification.

CLAUSE NO.	Bidder to refer the relevant portion with respect to CPU **TECHNICAL REQUIREMENTS**
	(k) Oil flushing of lube oil system, control & jacking oil system, for BFP sets shall be done. Entire flushing oil requirement & refilling with fresh oil and other consumables alongwith flushing equipment shall be met by the Contractor. (l) Steam blowing & chemical cleaning, as applicable of integral piping of BFP sets & other piping in the scope of the Contractor shall be done by the Contractor. (m) All tests and activities pertaining to the BFP and its drive as per manufacturer's recommendations and as given in the chapter and covered in the specification. (n) Hydraulic Test for all low and high pressure piping, equipment cooling water system pipes and associated equipment etc. shall be done as per statutory requirement and specified elsewhere shall be carried out. All equipment needed for the tests shall be furnished by the Contractor. (o) All tests and activities pertaining to the Generator and Excitation as per manufacturer's recommendations and covered in the specification. (p) All tests and activities pertaining to the Generator Auxiliaries viz Primary water system, Seal oil system, Gas system etc., as per manufacturer's recommendations and covered in the specification. (q) Any other pre-commissioning checks/ tests and activities as described below and also those mutually agreed between the Contractor & the Employer shall be undertaken . **CONTROL & INSTRUMENTATION SYSTEM REQUIREMENTS**
3.02.07	For STG integral controls the following requirement shall be demonstrated through native HMI of the respective DDCMIS..
3.02.08	The offered control system shall meet the requirement of initial pressure at turbine inlet as per the requirement of IEC-45-1 or equivalent as defined under mechanical sections of the specification. In order to realize the stipulated process requirement of TG systems that will be realized by interaction with employer procured control system Bidder will provide all required data and necessary interfaces so that Integrated Plant operation and control can be seamlessly realized by the employer.
3.02.09	The offered control system shall meet the process requirements specified under Sub Section OPERATING CAPABILITY OF THE PLANT, Part-B of Technical Specifications
3.02.10	Further the Contractor DDCMIS and Employer's SG C&I part of DDCMIS shall be properly integrated to achieve total plant operation. All required interfacing requirements shall be provided by the Contractor for enabling this integration of the total plant C&I and achieving the performance requirements. Tests in this regard shall be carried out at site by the Employer to verify the integrated performance of the total plant C&I. In case during these tests or otherwise it is observed that the behaviour/response of Contractor's system (drives actuators/valves etc.) is not satisfactory/acts as a limitation/restriction in achieving the permissible limits, the

CLAUSE NO.	Bidder to refer the relevant portion with respect to CPU TECHNICAL REQUIREMENTS
	Contractor shall carry out all required modifications, rectification etc. in his systems without any price repercussions whatsoever so that the permissible limits can be achieved. Contractor shall depute his experts for associating in the above tests and also for carrying out the necessary modifications, rectification etc. in Contractor's equipment and Control systems.
3.02.11	In case the Contractor feels that some specific requirements are to be met by the SG C&I contractors, then the same has to be clearly brought out in the offer. (For example the loop reaction time is specified as 500 millisec. in SG C&I specification).
3.02.12	Contractor shall meet system performance and parametric requirement follows -
3.02.13	On the bidder's supplied DDCMIS system ,the following parametric tests shall also be conducted under worst case loading conditions (details of worst case loading shall be as agreed during detailed engineering.) (i) For control system - CPU loading, Cycle time/controller reaction time (ii) For MMIPIS - CPU loading, spare duty cycle, Memory Spare Capacity (if applicable as per standard practice of bidder) (iii) Spare duty cycle for system bus (if applicable as per standard practice of bidder) (iv) Various display response time (v) System accuracy (vi) Display update time
3.02.14	For the parametric test, the following requirements shall be met (i) **Processor Spare Duty Cycle (Free Time)** - Under worst case loading of MMIPIS and system bus each MMIPIS processor shall have 40% free time when measured over any two second period and 50% free time when measured over any one minute period. (if applicable as per standard practice of bidder) - Under worst case loading conditions of control system, control system processor shall have 20% free time when measured over any one minute period.

CLAUSE NO.	Bidder to refer the relevant portion with respect to CPU **TECHNICAL REQUIREMENTS**

- The Bidder shall furnish all necessary data to fully satisfy the Employer that the processor spare duty cycle figures quoted by the Bidder are realistic and based on configuration and computation capability of the offered system and these shall be actually achieved in the fully implemented system as commissioned at project site.

(ii) **System Bus Spare Duty Cycle (Free Time)**

The system bus shall have min. 50% free time during the worst case loading conditions of control system, MMIPIS and the system Bus, measured over any 2 seconds interval. (if applicable as per standard practice of bidder)

(iii) **Response Time**

(a) Display:

The time from mouse click or last button pressed to the commencement of the requested display under the worst case loading conditions shall not be worse than the following:

All control related displays	2 sec
Point Details Display(single point)	1-2 secs
Bar chart display (20 points, current data)	2-3 secs.
Operator guide/plant start-up guide message display (full screen of alphanumeric information and a maximum of ten numbers of dynamic data items)	1-2 secs.
Plant mimic display of fair complexity with a minimum of 120 numbers of dynamic data items e.g., values, macros, line segment, etc.	2-3 secs.
Group review display (current values of twenty points)	2-3 secs.
X-Y plot display (2 X-Y- plots and a single display requiring both historical as well as current data)	3-4 secs.
X-T plot display (Trend of 6 analog points and a single display requiring both historical as well as current data)	3-4 secs.
Plant Summary display (e.g., bad point summary, limit check removed point summary. Assume the whole data base search is required and the summary display contains ten points only).	3-4 secs.

CLAUSE NO.	Bidder to refer the relevant portion with respect to CPU TECHNICAL REQUIREMENTS

(b) Command:

The response time for screen update, after the execution of the control command, from the time the command is issued (for example command to start a motor to the time the screen is updated) shall be within two seconds (excluding the drive actuation time).

(iv) **System Accuracy Requirements**

The overall system accuracy from signal input terminals to output presentation on display and printers shall meet process requirement as agreed during detailed engineering.

(v) **Display Updated Rates**

All displays shall be updated at least every two seconds.

3.03.00 LIST OF TEST / ACTIVITIES TO BE PERFORMED ON TG & AUXILIARY (BUT NOT LIMITED TO THE FOLLOWING)

A) **TESTING SCHEDULES**

1. TURBINE ON BARRING GEAR
2. BEARING AND JACKING OIL INITIAL CIRCULATION
3. HP BYPASS SYSTEM
4. LP BYPASS SYSTEM
5. GOVERNOR OIL CONTROL SYSTEM
6. VACUUM RAISING PLANT
7. CONDENSER & COLTCS SYSTEM
8. CENTRAL OIL PURIFICATION PLANT
9. HYDRAULIC TEST PROCEUDRE FOR
   - A) LUB OIL SYSTEM
   - B) CONTROL OIL & JACKING OIL SYSTEM
   - C) GENERATOR SEAL OIL SYSTEM
   - D) GENERATOR STATOR WATER SYSTEM

CLAUSE NO.	Bidder to refer the relevant portion with respect to CPU **TECHNICAL REQUIREMENTS**

E) GENERATOR GAS SYSTEM (Alternatively, pneumatic test with suitable leak detection method shall also be acceptable subject to owner's approval)

F) HEATERS

10. OIL FLUSHING OF LUB OIL SYSTEM

11. OIL FLUSHING OF CONTROL & JACKING OIL SYSTEM

12. OIL FLUSHING OF GENERATOR SEAL OIL SYSTEM

13. ALKALI FLUSHING FOR CONDENSATE SYSTEM

14. HP/ LP BYPASS SYSTEM

15. CONDENSER FLOOD TEST

16. CONDENSER VACUUM TIGHTNESS TEST

17. STEAM BLOWING OF GLAND SEAL PIPE LINES, AUX. STEAM PIPELINE

18. CEP

19. Drip Pump (if applicable)

20. HEATER

21. DEAERATOR

22. BFP

23. BEARING AND JACKING OIL INITIAL CIRCULATION

24. GOVERNOR OIL CONTROL SYSTEM

25. HYDRAULIC TEST PROCEDURE FOR

A) LUB OIL SYSTEM

B) CONTROL OIL & JACKING OIL SYSTEM

C) WATER SYSTEM

D) HEAT EXCHANGERS

26. OIL FLUSHING OF LUB OIL SYSTEM

27. OIL FLUSHING OF CONTROL & JACKING OIL SYSTEM

CLAUSE NO.	Bidder to refer the relevant portion with respect to CPU **TECHNICAL REQUIREMENTS**

28. STEAM BLOWING OF GLAND SEAL PIPE LINES, AUX. STEAM PIPELINE

29 HT MOTORS

B) COMMISSIONING SCHEDULE

1. Turbine Gland sealing system for Main Turbine
2. HP-LP Bypass system
3. Turbine Initial Run up for Main Turbine
4. Lube Oil / Governing Oil System for Main Turbine
5. LP HEATERS
6. HP HEATERS
7. DEAERATOR STEAM OPERATION
8. Turbine Gland sealing system for BFP turbine
9. Turbine Initial Run up for BFP turbine
10. Lube Oil / Governing Oil System for BFP turbine
11. Generator and excitation system
12. Generator seal oil system
13. Generator stator water system
14. Generator gas system

C) COMMISSIONING TESTS/CHECKS

1. Test running of all pumps
2. Condenser vacuum test, feed water heater operational tests for establishing correct cascaded flow, heater water levels etc. & checking of all parameters as per approved heat balance diagrams.
3. Test for HP/LP bypass valves operation & their control system.
4. Test for operation of governing control system for turbines.
5. Standard commissioning tests and procedures as per Contractor's practice for steam turbine generator and other equipment / auxiliaries within the Contractor's scope of work.

CLAUSE NO.	Bidder to refer the relevant portion with respect to CPU **TECHNICAL REQUIREMENTS**

6. Checks on operation of all individual control loops in the turbine generator control system.

7. Checks on correct functioning of the Turbine Protection System (TPS), Turbine Supervisory Control System (TSCS) for main turbine, Automatic Turbine Run-up System (ATRS), Automatic Testing of Turbine (ATT).

8. Standard commissioning tests and procedures as per Contractor's practice for CEP and other equipment / auxiliaries within the Contractor's scope of work.

9. Checks on operation of all individual control loops in the CEP control system.

10. Standard commissioning tests and procedures as per Contractor's practice for Drip Pump (if applicable) and other equipment / auxiliaries within the Contractor's scope of work.

11. Checks on operation of all individual control loops in the Drip Pump control (if applicable) system.

12. Feed Water Heater operational test for establishing correct cascaded flow, heater water levels and checking of all parameters as per approved heat balance diagram

13. Standard commissioning tests and procedures as per Contractor's practice for heaters and deaerator and other equipment / auxiliaries within the Contractor's scope of work.

14. Checks on operation of all individual control loops in the heater and deaerator control system.

15. Test for operation of governing control system for BFP turbines.

16. Standard commissioning tests and procedures as per Contractor's practice for BFP and other equipment / auxiliaries within the Contractor's scope of work.

17. Checks on operation of all individual control loops in the BFP control system.

18. Checks on correct functioning of the BFP Turbine for Turbine Protection System (TPS), Turbine Supervisory Control System (TSCS) for main turbine, Automatic Turbine Run-up System (ATRS), Automatic Testing of Turbine (ATT).

19. Calibration tests of orifice, flow nozzles, instruments and control equipment to the extent included in these specifications.

20. Checks on operation of all rotating equipments to ascertain level of noise and vibration

CLAUSE NO.	Bidder to refer the relevant portion with respect to CPU TECHNICAL REQUIREMENTS
	21. Checks on operation of all static equipments to ascertain level of noise and vibration 22. Standard commissioning tests and procedures as per manufacturer's practice for Generator, Excitation and its auxiliaries within the Contractor's scope of work.
3.04.00	**Chemical Cleaning of Pressure Parts** Complete chemical cleaning procedure, the scheme and layout including parameters of the pumps, size of tanks, materials of construction, the rate of consumption and total requirements of steam and water for such cleaning process shall meet the approval of the Employer. The Contractor shall furnish all labour, materials such as the required chemicals and other consumables, all equipment such as acid transfer and acid circulating pumps complete with drive motors, acid storage and acid mixing tanks, all temporary piping, valves and specialities and local instruments for pressure, temperature and flow measurements and any other items needed to carry out the process. All equipment required for chemical cleaning shall be supplied by the contractor. The Employer will arrange to supply Raw water and Demineralised water required for the cleaning operations at the Terminal Point's as indicated elsewhere, in the specification. The Contractor shall take care to dispose off the used chemicals and the effluents from the cleaning operations, after neutralisation, meeting all the statutory regulations and in a manner acceptable to the Project Manager and which would comply with the norms of the State Pollution Control Board. This include construction of suitable neutralization pit, channels, disposal equipments etc. The Contractor shall specifically make all necessary arrangements for prevention of any fire accidents, explosions etc. during the performance of the chemical cleaning operations. The Contractor shall ensure that during the cleaning process the procedure adopted shall be such as to consume minimum demineralized water. All equipment needed for such preservation including the nitrogen cylinders, interconnecting piping and any regulating equipment for N2 cap and other preservatives shall be provided by the Contractor and the same shall also become the property of the Employer after completion of the chemical cleaning. The Contractor shall provide adequate safety and protective equipment for all his employees and ensure that they are worn at all times of danger. Specialised treatment equipment (such as required for first aid when using hydrofluoric acid) must be provided at the place of handling acid. An acid cleaning report and log of each cleaning must be provided by the Contractor to the Employer, immediately after the cleaning operation.

CLAUSE NO.	Bidder to refer the relevant portion with respect to CPU TECHNICAL REQUIREMENTS
3.05.00	**Steam Blowing** Steam blowing of various pipelines shall be carried out by the Contractor as per requirements/scope of work of this specification. In addition if any other piping, not specifically mentioned in the scope of the Contractor and is also required to be steam blown, the Contractor shall also to perform steam blowing of these additional piping during steam blowing operation. The Contractor shall give recommended procedures, method of blowing and scheme for steam blowing indicating clearly additional system, if any, to be cleaned by steam blowing and furnish data/ write-up/ layouts/ drawings to that effect to the Employer for the Employer's approval. The Contractor shall furnish his recommendations regarding use of various test equipments and instruments and termination/acceptance criteria for steam blowing, which in any case shall meet the steam turbine-generator requirements. The systems which should be ready and operational before steam blowing and are in the scope of the Contractor shall be made ready/operational by the Contractor by the scheduled date for starting of steam blowing. For equipments/components installed on high pressure boiler external piping, such as various thermowells, flow meter, control valves, HP/LP Bypass valves etc., the Contractor shall comply with guidelines to be followed during steam blowing, with respect to removal / blanking / replacement of such items their internals etc. by spool pieces as given by the respective manufacturer/sub-contractor. Supply of all such spools (as above) and/or blanks, temporary piping and supports etc. as required, cutting / welding / edge preparation and rewelding required for blanking, temporary piping connection and/or for replacements by spool pieces shall be the responsibility of the Contractor. After steam blowing removal of spool pieces & temporary piping and reinstallation of various components, shall also be the responsibility of the Contractor. The Contractor shall ensure successful and timely completion of steam blowing of all systems and will render all help/services as required including: (i) Services of test/operating personnel/supervisors. (ii) Extending all cooperation during erection, pre-commissioning of plant and equipment to be made ready and operational before starting steam blowing. (iii) Extending all cooperation for interface engineering of equipments/components of temporary system required for steam blowing operation. (iv) Contractor's engineers shall be available for all coordination meetings arranged by the Employer for finalising the details of temporary system for steam blowing.

CLAUSE NO.	Bidder to refer the relevant portion with respect to CPU TECHNICAL REQUIREMENTS
3.06.00	**Balance of Plant equipment & systems** All pre-commissioning tests & activities as indicated above and elsewhere in the technical specification shall be performed by the Contractor.
3.07.00	**Commissioning of Facilities**
3.07.01	**General** Upon completion of precommissioning activities/test the Contractor shall initiate commissioning of facilities. During commissioning the Contractor shall carryout system checking and reliability trials on various parts of the facilities. Contractor shall carry out these checks/tests at site to prove to the Employer that each equipment of the supply complies with requirements stipulated and is installed in accordance with requirements specified. Before the plant is put into initial operation the Contractor shall be required to conduct test to demonstrate to the Employer that each item of the plant is capable of correctly performing the functions for which it was specified and its performance, parameters etc. are as per the specified/approved values. These tests may be conducted concurrently with those required under commissioning sequence. The Contractor shall finalise the protocol of check lists, after erection of the system and equipment, as per International Codes/Standard with the Employer. The Contractor shall furnish requisite no. of copies of procedures and list of start up, precommissioning, commissioning and initial operation tests for Employer's approval. The Contractor shall also demonstrate the performance of all C&I equipment, the tests on main equipment or prior to that as the case may be. Other tests shall be conducted, if required by the Employer, to establish that the plant equipments are in accordance with requirements of the specifications.
4.00.00	**Initial Operation** Upon completion of system checking/tests and as a part of commissioning of facilities, complete plant/facilities shall be put on initial operation for a period of thirty (30) days or 720 hours as stipulated in General Technical Requirements.
5.00.00	The Contractor shall conduct all the commissioning tests and undertake commissioning activities pertaining to all other auxiliaries and equipments including all Electrical & C&I equipment/systems not specifically brought out above but are within the scope of work and facilities being supplied & installed by the Contractor and follow the guidelines indicated above or elsewhere in these technical specifications (Section-VI).

CLAUSE NO.	Bidder to refer the relevant portion with respect to CPU TECHNICAL REQUIREMENTS
6.00.00	**COMMISSIONING SPARES**
6.01.00	It will be the responsibility of the Contractor to provide all commissioning spares including consumable spares required for initial operation till the Completion of Facilities. The Contractor shall furnish a list of all commission-ing spares within 60 days from the date of Notification of Award and such list shall be reviewed by the Employer and mutually agreed to. However. such review and agreement will not absolve the Contractor of his responsibilities to supply all commissioning spares so that initial operation do not suffer for want of commissioning spares. All commissioning spares shall be deemed to be included in the scope of the Contract at no extra cost to the Employer.
6.02.00	These spare will be received and stored by the Contractor atleast 3 months prior to the schedule date of commencement of initial operation of the respective equipment and utilised as and when required. The unutilised spares and replaced parts, if any, at the end of successful completion of guarantee tests shall be the property of the Contractor and he will be allowed to take these parts back at his own cost with the permission of Employer.

FORMAT FOR OPERATION AND MAINTENANCE MANUAL

	TITLE: TECHNICAL SPECIFICATION FOR CONDENSATE POLISHING UNIT 2X660 MW KHURJA STPP	BHEL DOCUMENTS NO.: PE-TS-475-155-A001	
		VOLUME IIB	
		SECTION – IIA	
		REV. NO. 00	DATE:

FORMAT FOR OPERATION AND MAINTENANCE MANUAL

Project name :
Project number :
Package Name :
PO reference :
Document number :
Revision number :

Sl.no. & Sections	Description	Tick (√)if included in Manual			Remarks
		Yes	No	Not Applicable	
1.	**Cover page**				
1.1	Project Name				
1.2	Customer/consultant Name				
1.3	Name of Package				
1.4	Supplier details with phone, FAX ,email address , Emergency Contact number				
1.5	Name and sign of prepared by , checked by & approved by				
1.6	Revision history with approval Details				
2.0	**Index**				
2.1	showing the sections & related page nos All the pages should be numbered section wise				
3.0	**Description of Plant/System**				
3.1	Description /write up of operating principle of system equipment/ associated sub-systems & accessories/controls system , operating conditions, performance parameters under normal , start up and special cases				
3.2	Equipment list and basic parameter with Tag numbers				
3.3	Data sheets approved by Customer/for information and catalogues provided by original manufacturer				
3.4	Associated other packages and Interface /terminal points				
3.5	P&ID & Process Diagrams				
3.6	GA Layout drawings, As-built drawings , Actual photograph of items/system (Drawings of A2 & bigger sizes are to be attached in the last)				
3.7	Single line/wiring diagrams				
3.8	Control philosophy /control write-ups				
4.0	**Commissioning Activities (if not covered in separate document i.e. erection manual, commissioning manual)**				
4.1	Pre-Commissioning Checks				
4.2	handling of items at site				
4.3	Storage at site				
4.4	Unpacking & Installation procedure				
5.0	**Operation Guidelines for plant personal/user/operator**				
5. 1	Interlock & Protection logic along with the limiting values of protection settings for the equipment along with brief philosophy behind the logic, drawings etc. to be provided.				

5. 2	Start up, normal operation and shut down procedure for equipments along with the associated systems in step by step mode. Valve sequence chart, step list, interlocks etc. with Equipment isolating procedures to be mentioned.				
5. 3	Do's & Don't of the equipments.				
5. 4	Safety precautions to be taken during normal operation. Safety symbols, Emergency instructions on total power failure condition/lubrication failure/any other condition				
5. 5	Parameters to be monitored with normal values and limiting values				
5. 6	Trouble shooting with causes and remedial measures				
5. 7	Routine operational checks, recommended logs & records				
5. 8	Changeover schedule if more than one auxiliary for the same purpose is given				
5. 9	Painting requirement and schedule				
5. 10	Inspection, repair , Testing and calibration procedures				
6.0	**Maintenance guidelines for plant personal**				
6.1	List of Special Tools and Tackles required for Overhaul/Trouble shooting including special testing equipment required for calibration etc.				
6.2	Stepwise dismantling and re-assembly procedure clearly specifying the tools to be used, checks to be made, records to be maintained, clearances etc. to be mentioned. Tolerances for fitment of various components to be given.				
6.3	Preventive Maintenance & Overhauling schedules linked with running hours/calendar period along with checks to be given				
6.4	Long term maintenance schedules especially for structural, foundations etc.				
6.5	Consumable list along with the estimated quantity required during commissioning, normal running and during maintenance like Preventive Maintenances and Overhaul. Storage/handling requirement of consumables/self-life.				
6.6	List of lubricants with their Indian equivalent, Lubrication Schedule, Quantity required for each equipment for complete replacement is to be given				
6.7	List of vendors & Sub-vendors with their latest addresses, service centres ,Telephone Nos., Fax Nos., Mobile Nos., e-mail IDs etc.				
6.8	List of mandatory and recommended spare parts list				
6.9	Tentative Lead time required for ordering of spares from the equipment supplier				
6.10	Guarantee and warranty clauses				
7.0	**Statutory and other specific requirements considerations.**				
8.0	**List of reference documents**				
9.0	**Binding as per requirement**				

714406/2022/PS-PEM-MAX

SITE STORAGE & PRESERVATION GUIDELINES FOR MECHANICAL BOP's

CONTENT

1 SCOPE OF THE DOCUMENT

2 PURPOSE OF STORAGE & PRESERVATION

3 MEASURES TO BE TAKEN FOR STORAGE AND PRESERVATION

a) GENERAL STORAGE REQUIREMENTS

b) GENERAL PRESERVATION REQUIREMENTS

c) GENERAL INSPECTION REQUIREMENTS

4 TYPE OF STORAGE FOR VARIOUS EQUIPMENT

5. CONCLUSION

6. STACKING ARRANGEMENT FOR PLATES AND STRUCTURAL STEEL

1. SCOPE OF THE DOCUMENT

This guideline is prepared in intent to provide proper site storage and preservation of the Mechanical, Electrical and C & I items / equipment supplied under various bought out packages/items. This storage procedure shall be followed at different power plant sites by concerned agency for storage and preservation from the date of equipment received at site until the same are erected and handed over to the customer.

2. PURPOSE OF STORAGE & PRESERVATION

Many of the items may be required to be kept in stores for long period. It shall therefore be essential that proper methods of storage and preservation be applied so that items do not deteriorate, loose some of their properties and become unusable due to atmospheric conditions and biological elements.

3. MEASURES TO BE TAKEN FOR STORAGE, HANDLING & PRESERVATION

a) GENERAL STORAGE REQUIREMENTS

1. To the extent feasible, materials should be stored near the point of erection. The storage areas should have adequate unloading and handling facilities with adequate passage space for movement of material handling equipment such as cranes, fork lift trucks, etc. The storage of materials shall be properly planned to minimise time loss during retrieval of items required for erection.
2. The outdoor storage areas as well as semi-closed stores shall be provided with adequate drainage facilities to prevent water logging. Adequacy of these facilities shall be checked prior to monsoon.
3. The storage sheds shall be built in conformity with fire safety requirements. The stores shall be provided with adequate lights and fire extinguishers. ‘No smoking’ signs shall be placed at strategic locations. Safety precautions shall be strictly enforced.
4. Adequate lighting facility shall be provided in storage areas and storage sheds and security personnel positioned to ensure enforcement of security measures to prevent theft and loss of materials.
5. Adequate number of competent stores personnel and security staff shall be deployed to efficiently store and maintain the equipment / material.
7. The equipment shall be stored in an orderly manner, preserving their identification slips, tags and instruction booklets, etc., required during erection. The storage of materials shall be equipment-wise. Loose parts shall be stored in sheds on racks,

preserving the identification marks and tags in good condition. The group codes shall be displayed on the racks

6. At no time shall any materials be stored directly on ground. All materials shall be stored minimum 200 mm above the ground preferably on wooden sleepers

b) GENERAL PRESERVATION REQUIREMENTS

1. All special measures to prevent corrosion shall be taken like keeping material in dry condition, avoiding the equipment coming in contact with corrosive fluid like water, acid etc.
2. Materials which carry protective coating shall not be wrapped in paper, cloth, etc., as these are liable to absorb and retain moisture. The material shall be inspected and in case of signs of wear or damages to protective coating, that portion shall be cleaned with approved solution and coated with an approved protective paint. Complete record of all such observations and protective measures taken shall be maintained.
3. Generally equipment supplied at site are properly greased or rust protective oil is applied on machined/ fabricated components. However periodic inspection shall be carried out to ensure that protection offered is intact.
4. While handling the equipment, no dragging on the ground is permitted. Avoid using wire rope for lifting coated components. Use polyester slings (if possible) otherwise protective material (e.g. clothes, wood block etc.) should be used while handling the components with rope / slings
5. For Equipment supplied with finished paint, touch paint shall be done in case any surface paint gets peeled off during handling. Otherwise such surfaces shall necessarily be wrapped with polythene to avoid any corrosion. Further for equipment wherein finish coat is to be applied at site, site to ensure that equipment is received with primer coat applied.
6. It shall be ensured by periodic inspection that plastic inserts are intact in tapped holes, wherever applicable.
7. Pipes shall be blown with air periodically and it shall be ensured that there is no obstruction.
8. Silica gel or approved equivalent moisture absorbing material in small cotton bags shall be placed and tied at various points on the equipment, wherever necessary.
9. Heavy rotating parts in assembled conditions shall be periodically rotated to prevent corrosion/jamming due to prolonged storage.

10. All the electrical equipment such as motors, generators, etc. shall be tested for insulation resistance at least once in three months and a record of such measured insulation values shall be maintained.

11. Following preservatives/preservation methods can be used depending upon type of equipment

    a. Rust preventive fluid (RPF)

    b. Rust protective paints

    c. Tarpaulin covers, in case of outdoor storage

    d. De-oxy aluminate for weld-ments

c) GENERAL INSPECTION REQUIREMENTS

1. Period inspection of materials with specific reference to –

    - Ingress of moisture and corrosion damages.
    - Damage to protective coating.
    - Open ends in pipes, vessels and equipment -
        - In case any open ends are noticed, same shall be capped.

2. Any damages to equipment / materials.

    - In case of any damages, these shall be promptly notified and in all cases, the repairs / rectification shall be carried out.
    - Any items found damaged or not suitable as per project requirements shall be removed from site. If required to store temporarily, they shall be clearly marked and stored separately to prevent any inadvertent use.

4. TYPE OF STORAGE FOR VARIOUS EQUIPMENT

The types of storage are broadly classified under the following heads:

i **Closed storage with dry and dust free atmosphere**. (C)

The closed shed can be constructed by using cold-rolled / tubular components for structure and corrugated asbestos sheets / galvanised iron sheets for roofing. Brick walls / asbestos sheets can be used to cover all the sides. The floor of the shed can be finished with plain cement concrete suitably glazed. The shed shall be provided with proper ventilation and illumination.

ii **Semi-closed storage**. (S)

The semi closed shed can be constructed by using cold-rolled / tubular components for structure and corrugated / asbestos sheets for roofing. The floor shall be brick paved. If required a small portion of sides can be covered to protect components from rainwater splashing onto the components.

iii Open storage (O)

The open yard shall be levelled, well consolidated to achieve raised ground with the provision of feeder roads for crane approach along with access roads running all sides. One part of the open yard shall be stone pitched, levelled and consolidated with raised ground suitable for storing / stacking heavier and critical components with due space to handle them by cranes etc . Adequate number of sleepers, concrete block etc. to be provided to make raised platforms to stack critical materials.

A separate yard to be identified as “scrap yard” slightly away from main open yard to store wooden/steel scraps, which are to be disposed off. This is required to avoid mix up with regular components as well as to avoid fire hazard.

Some of the components, which are having both machined & un-machined surfaces and are bulky, shall be stored in open storage area on a raised ground and suitably covered with water proof / fire retardant tarpaulin.

The equipment listed below shall be stored and inspected as per requirement mentioned in the table below.

Sl. No.	Description of the equipment	Type of Storage	Check for	Remarks
Raw material /mechanical items like pipes, plates, structure sections etc.)				
1.	Steel pipes (lined/unlined)	S	Damage , paint, corrosion, rubber lining peeling	Provide end cap
2.	MS Plates	S	Damage, paint, corrosion	
3.	SS Plates	S	Damage	
4.	Non-metallic pipes	S	Damage, cracks	Provide end cap
5.	Stainless steel pipes	S	Damage ,	Provide end cap
6.	MS sections, beams	S	Damage, paint, corrosion	
7.	Cable trays	S	Damage, condition of preservations	
8.	Insulation sheets	S	Damage	
9.	Insulation	C	Damage, packing	
10.	Hangers Rods	S	Damage, paint, packing	
11.	Tubes	S	Damage, paint , packing	Provide end cap
12.	Hume pipes	O	Damage	
13.	Castings	O	Damage, paint, corrosion	
Fabricated mechanical items (pressure vessels, tanks etc.)				
14.	Pressure vessels (unlined)	O	Damage, paint, corrosion,	Covered nozzles
15.	Atmospheric storage tanks (unlined)	O	Damage, paint, corrosion	Covered nozzles

Sl. No.	Description of the equipment	Type of Storage	Check for	Remarks
16.	Pressure vessels (lined)	S	Damage, paint, corrosion, rubber lining	
17.	Atmospheric storage tanks(lined)	S	Damage, paint, corrosion, rubber lining	
18.	Support structures	O	Damage , paint, corrosion	
19.	Flanges	C	Damage , paint, corrosion	
20.	Fabricated pipes	S	Damage , paint, corrosion	Provide end cap
21.	Vessels internals	C	Damage , paint, corrosion ,packing	
22.	Grills	S	Damage , paint, corrosion	
23.	Angles	S	Damage , paint, corrosion	
24.	Bridge mechanism/clarifier mechanism	O	Damage , paint, corrosion	
25.	Cranes, rails	S	Damage , paint, corrosion	
26.	Stair cases	O	Damage , paint, corrosion	
27.	Ladders/handrails	O	Damage , paint, corrosion	
28.	Fabricated ducts	S	Damage , paint, corrosion	
29.	Isolation Gates	O	Damage , paint, corrosion	
30.	Fabricated boxes/panels	S	Damage , paint, corrosion	
Mechanical components like valves, fittings, cables glands, spares etc.)				
31.	Valves	S	Damage , packing	

Sl. No.	Description of the equipment	Type of Storage	Check for	Remarks
32.	Fittings	S	Damage , packing	Provide end cap
33.	Cable glands	C	Damage , packing	
34.	Tools & tackles	C	Damage , packing	
35.	Nut , bolts, washers,	C	Damage , packing	
36.	Gasket & Packings	C	Damage , packing	
37.	Copper tubes	C	Damage , packing, corrosion	Provide end cap
38.	SS tubing	C	Damage , packing	Provide end cap
Rotating assemblies (pumps, blowers, stirrers, fans, compressors etc.)				
39.	Pumps	S	Damage , packing, corrosion	Shaft rotation
40.	Blowers/Compressors	S	Damage , packing, corrosion	Shaft rotation
41.	Agitators/stirrers/radial launders	C	Damage , packing, corrosion	Shaft rotation
42.	Rollers for chlorine tonner mounting	C	Damage , packing, corrosion	
43.	Centrifuge	S	Damage , packing,	
44.	Gear box	C	Damage , packing, corrosion	
45.	Bearings	C	Damage , packing, corrosion	
46.	Fans	S	Damage , packing, corrosion	
47.	Dosing skids	S	Damage , packing, corrosion	
48.	Pump assemblies	S	Damage , packing, corrosion	
49.	Air washers(INTERNALS)	S	Damage , packing	
50.	Air conditioners (split)	C	Damage , packing	

Sl. No.	Description of the equipment	Type of Storage	Check for	Remarks
51.	Elevators(CONTAINERIZED)	O	Damage , packing, corrosion	
52.	Chillers/VA machines	S	Damage , packing	
53.	Air handling Unit/Package unit	S	Damage , packing	
54.	Chlorinators & Evaporators	C	Damage , packing	
55.	Ejectors	C	Damage , packing	
56.	Electrolyser	C	Damage , packing	
Miscellaneous items like chain pulley blocks, hoists etc.				
57.	Chain pulley blocks	S	Damage, Packing	
58.	Electric hoists	S	Damage, Packing	
59.	Fire extinguishers	C	Damage, expiry date	
60.	Fork Lift Truck	S	Damage, Packing	
61.	Hydraulic Mobile Crane	O	Damage, Packing	
62.	Mobile Pick Up & Carry Crane	O	Damage, Packing	
63.	Motor boats	O	Damage, Packing	
64.	Safety showers	S	Damage, Packing	
65.	Diffusers/dampers	S	Damage, Packing	
Chemicals and consumables (acid, alkali, paints, oils, reagents and special chemicals)				
66.	Hydro Chloric Acid (HCl)	Store in canes/ storage tank in dyke area	Date of production/ leakage/fumes	hazardous chemical
67.	Sulphuric acid (H_2SO_4)	Store in canes/ storage tank in dyke area	Date of production/ leakage/fumes	hazardous chemical

Sl. No.	Description of the equipment	Type of Storage	Check for	Remarks
68.	Sodium hydroxide (NaOH)	Store in canes/ storage tank in dyke area	Date of production/ leakage/ fumes/ breather	hazardous chemical ,breather to be checked for air ingress
69.	Sodium hypo chlorite	To be stored under shed	Date of production/ leakage/ fumes	hazardous chemical ,self-life normally 15-30 days after which strength of chemical decays
70.	Ammonia	S	Date of production/ leakage/ fumes	Store in closed storage tanks, hazardous chemical
71.	CW treatment chemicals	S	Date of production , Self-life	Store in closed canes
72.	RO/UF cleaning chemicals	S	Date of production , Self-life	Store in closed canes
73.	Lime	C	Damage to packing , seepage	Prevent moisture, rain
74.	Alum bricks	C	Damage to packing	Prevent moisture, rain
75.	Poly electrolyte	S		Store in closed storage tanks
76.	Laboratory chemicals(powder)	C	Damage, Packing self-life	
77.	Laboratory chemicals(liquid)	C	Damage, Packing self-life	
78.	Lubrication oils	C	Leakage	
79.	Paints	S	Leakage ,air tightness	
80.	Sand	O	Damage of packing	No hooks
81.	Salt (NaCl)	C	Damage of packing, water ingress	Prevent moisture, rain
82.	Anthracite	S	Damage of packing	
83.	Activated carbon	S	Damage of packing	

Sl. No.	**Description of the equipment**	**Type of Storage**	**Check for**	**Remarks**
84.	Thermal insulation	S	Damage of packing	
85.	Cement	C	Damage of packing	Prevent moisture, rain
86.	Gravels	O	Damage of packing	
87.	ION exchange resins	C	Damage , packing	Refer manufacturer guidelines
88.	RO membranes	C	Damage , packing	Refer manufacturer guidelines
89.	UF membranes	C	Damage , packing	Refer manufacturer guidelines
90.	Cleaning chemicals	C	Damage , packing	Refer manufacturer guidelines
91.	Chemicals for analysers/calibration	C	Damage , packing	Refer manufacturer guidelines
Electrical and C & I items (motors, cables etc.)				
92.	Motors	C	Damage , packing	
93.	Cable drums	O	Damage	
94.	Control Panel /control desk, UPS ,JB	S	Damage, Packing	
95.	Instruments(gauges/analysers)	C	Damage	
Special items		As per Manufacturer's item, like Hydrogen cylinders, Ozonator, Analyser, Chlorine dioxide generators etc.		

5. CONCLUSION

Concerned storage agency at site should make sure that loss in equipment performance and wear & tear are minimised through proper storage and preservation. The above are broad guidelines and cover major equipment / materials. However specific storage practices shall be followed as per manufacturer recommendation. All the necessary measures even in addition to the ones mentioned above, if found necessary, should be taken to achieve the objective.

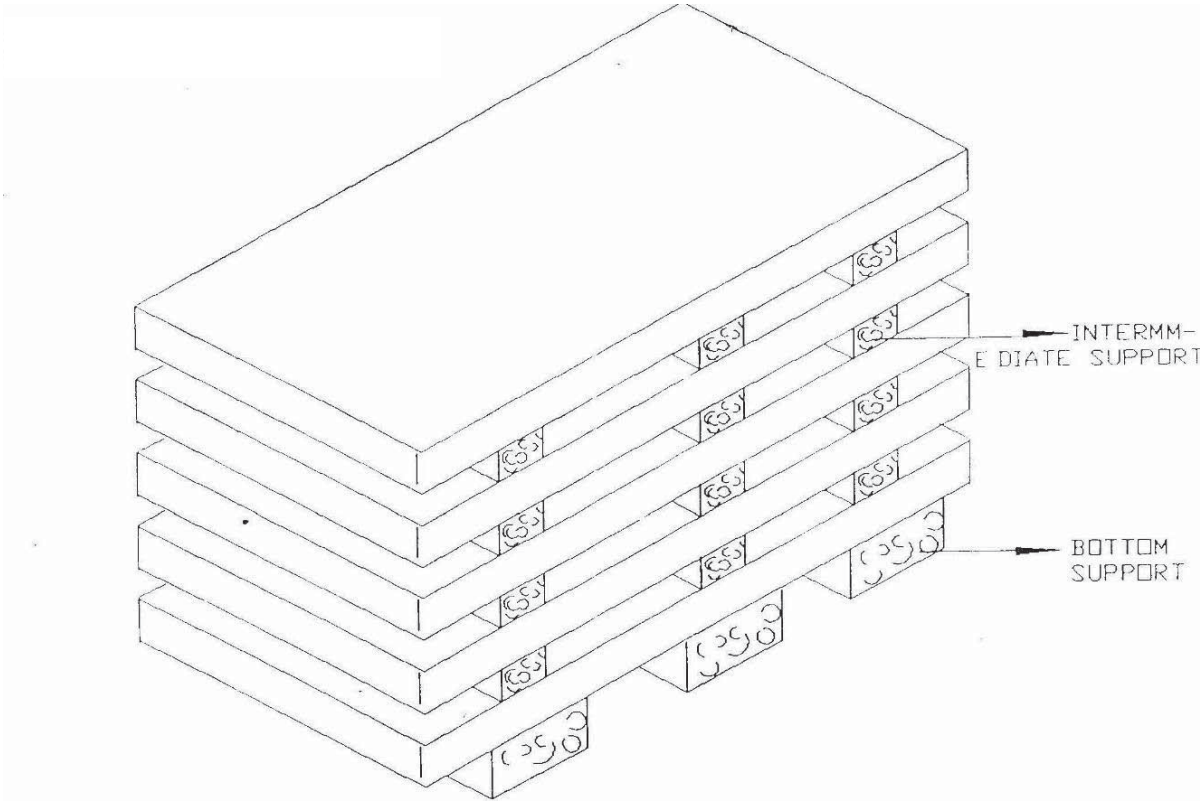

Figure – 1 – PLATE STACKING ARRANGEMENT

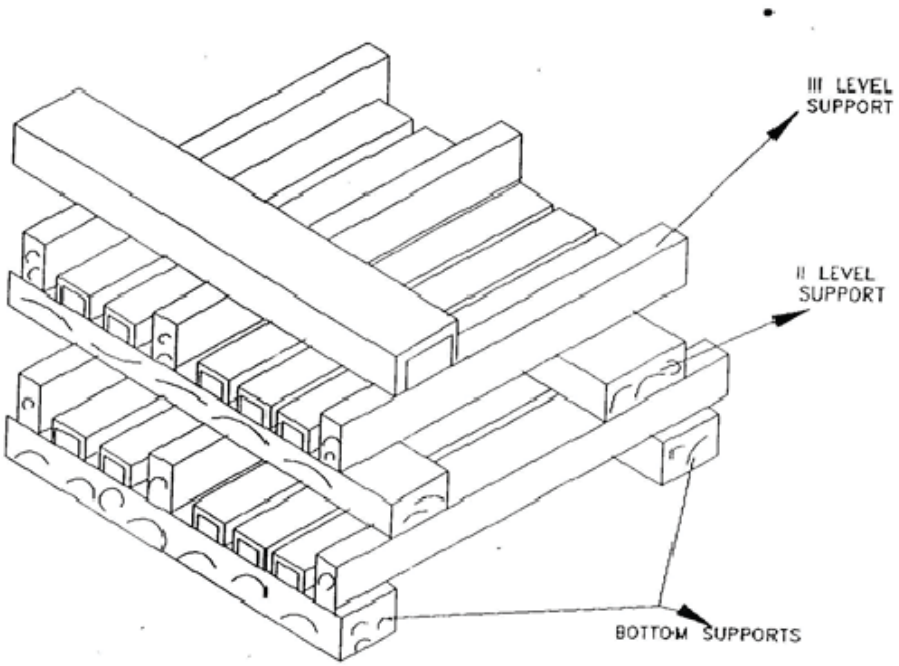

Figure – 2 – STRUCTURAL STEEL STACKING ARRANGEMENT

714406/2022/PS-PEM-MAX

GENERAL TECHNICAL REQUIREMENT – ELECTRICAL

TITLE	SPECIFICATION NO.
LV MOTOR	VOLUME II B
DATA SHEET – C	SECTION D
	REV NO. 00 DATE
2X660 MW KHURJA STPP-TG	SHEET 1 OF 2

S. No.	Description	Data to be filled by successful bidder
A.	**General**	
1	Manufacturer & country of origin	
2	Motor type	
3	Type of starting	
4	Name of the equipment driven by motor & Quantity	
5	Maximum Power requirement of driven equipment	
6	Rated speed of Driven Equipment	
7	Design ambient temperature	
B.	**Design and Performance Data**	
1	Frame size & type designation	
2	Type of duty	
3	Rated Voltage	
4	Permissible variation for	
5	a Voltage	
6	b Frequency	
7	c) Combined voltage & frequency	
8	Rated output at design ambient temp (by resistance method)	
9	Synchronous speed & Rated slip	
10	Minimum permissible starting voltage	
11	Starting time in sec with mechanism coupled	
12	a) At rated voltage	
13	b) At min starting voltage	
14	Locked rotor current as percentage of FLC (including IS tolerance)	
15	Torque	
	a) Starting	
	b) Maximum	
16	Permissible temp rise at rated output over ambient temp & method	
17	Noise level at 1.0 m (dB	
18	Amplitude of vibration	
19	Efficiency & P.F. at rated voltage & frequency	
	a) At 100% load	
	c) At 75% load	

NAME OF VENDOR				REV.	
			SEAL		
NAME	SIGNATURE	DATE			

	TITLE	SPECIFICATION NO.
BHEL	LV MOTOR	VOLUME II B
	DATA SHEET – C	SECTION D
		REV NO. 00 DATE
	2X660 MW KHURJA STPP-TG	SHEET 2 OF 2

S. No.	Description	Data to be filled by successful bidder
	c) At starting	
C.	**Constructional Features**	
1	Method of connection of motor driven equipment	
2	Applicable Standard	
3	DOP of Enclosure	
4	Method of cooling	
5	Class of insulation	
6	Main terminal box	
	a) Type	
	b) Power Cable details (Conductor, size, armour/unarmour)	
	c) Cable Gland & lugs details (Size, type & material)	
	d) Permissible Fault level (kArms & duration in sec)	
7	Space heater details (Voltage & watts)	
8	Flame proof motor details (if applicable)	
	a) Enclosure	
	b) suitability for hazardous area	
	i Zone	O / I / II
	ii Group	IIA / IIB / IIC
9	No. of Stator winding	
10	Winding connection	
11	Kind of rotor winding	
12	Kind of bearings	
13	Direction of rotation when viewed from NDE	
14	Paint Shade & type	
15	Net weight of motor	
16	Outline mounting drawing No (To be enclosed as annexure)	
D.	**Characteristic curves/ drawings** (To be enclosed for motors of rating ≥ 55KW)	
	a) Torque speed characteristic	
	b) Thermal withstand characteristic	
	c) Current vs time	
	d) Speed vs time	

NAME OF VENDOR				REV.	
NAME	SIGNATURE	DATE	SEAL		

	SYSTEM TITLE : **GENERAL TECHNICAL REQUIREMENTs** **FOR** **LV MOTORS**	SPECIFICATION NO. PE-SS-999-506-E101 VOLUME NO. : **II-B** SECTION : **D** REV NO. : **00** DATE : 29/08/2005 SHEET : 1 OF 1

GENERAL TECHNICAL REQUIREMENTS

FOR

LV MOTORS

SPECIFICATION NO.: PE-SS-999-506-E101 Rev 00

BHEL	TITLE : **GENERAL TECHNICAL REQUIREMENTs** **FOR** **LV MOTORS**	SPECIFICATION NO. PE-SS-999-506-E101 VOLUME NO. : **II-B** SECTION : **D** REV NO. : **00** DATE : 29/08/2005 SHEET : 1 OF 4

1.0 INTENT OF SPECIFIATION

The specification covers the design, materials, constructional features, manufacture, inspection and testing at manufacturer's work, and packing of Low voltage (LV) squirrel cage induction motors along with all accessories for driving auxiliaries in thermal power station.

Motors having a voltage rating of below 1000V are referred to as low voltage (LV) motors.

2.0 CODES AND STANDARDS

Motors shall fully comply with latest edition, including all amendments and revision, of following codes and standards:

IS:325	Three phase Induction motors
IS : 900	Code of practice for installation and maintenance of induction motors
IS: 996	Single phase small AC and universal motors
IS: 4722	Rotating Electrical machines
IS: 4691	Degree of Protection provided by enclosures for rotating electrical machines
IS: 4728	Terminal marking and direction of rotation rotating electrical machines
IS: 1231	Dimensions of three phase foot mounted induction motors
IS: 8789	Values of performance characteristics for three phase induction motors
IS: 13555	Guide for selection and application of 3-phase A.C. induction motors for different types of driven equipment
IS: 2148	Flame proof enclosures for electrical appliance
IS: 5571	Guide for selection of electrical equipment for hazardous areas
IS: 12824	Type of duty and classes of rating assigned
IS: 12802	Temperature rise measurement for rotating electrical machnines
IS: 12065	Permissible limits of noise level for rotating electrical machines
IS: 12075	Mechanical vibration of rotating electrical machines

In case of imported motors, motors as per IEC-34 shall also be acceptable.

3.0 DESIGN REQUIREMENTS

3.1 Motors and accessories shall be designed to operate satisfactorily under conditions specified in data sheet-A and Project Information, including voltage & frequency variation of supply system as defined in Data sheet-A

3.2 Motors shall be continuously rated at the design ambient temperature specified in Data Sheet-A and other site conditions specified under Project Information
Motor ratings shall have at least a 15% margin over the continuous maximum demand of the driven equipment, under entire operating range including voltage & frequency variation specified above.

3.3 Starting Requirements

3.3.1 Motor characteristics such as speed, starting torque, break away torque and starting time shall be properly co-ordinated with the requirements of driven equipment. The accelerating torque at any speed with the minimum starting voltage shall be at least 10% higher than that of the driven equipment.

3.3.2 Motors shall be capable of starting and accelerating the load with direct on line starting without exceeding acceptable winding temperature.

The limiting value of voltage at rated frequency under which a motor will successfully start and accelerate to rated speed with load shall be taken to be a constant value as per Data Sheet - A during the starting period of motors.

3.3.3 The following frequency of starts shall apply

i) Two starts in succession with the motor being initially at a temperature not exceeding the rated load temperature.

ii) Three equally spread starts in an hour the motor being initially at a temperature not exceeding the rated load operating temperature. (not to be repeated in the second successive hour)

iii) Motors for coal conveyor and coal crusher application shall be suitable for three consecutive hot starts followed by one hour interval with maximum twenty starts per day and shall be suitable for mimimum 20,000 starts during the life time of the motor

3.4 **Running Requirements**

3.4.1 Motors shall run satisfactorily at a supply voltage of 75% of rated voltage for 5 minutes with full load without injurious heating to the motor.

3.4.2 Motor shall not stall due to voltage dip in the system causing momentary drop in voltage upto 70% of the rated voltage for duration of 2 secs.

3.5 **Stress During bus Transfer**

3.5.1 Motors shall withstand the voltage, heavy inrush transient current, mechanical and torque stress developed due to the application of 150% of the rated voltage for at least 1 sec. caused due to vector difference between the motor residual voltage and the incoming supply voltage during occasional auto bus transfer.

3.5.2 Motor and driven equipment shafts shall be adequately sized to satisfactorily withstand transient torque under above condition.

3.6 Maximum noise level measured at distance of 1.0 metres from the outline of motor shall not exceed the values specified in IS 12065.

3.7 The max. vibration velocity or double amplitude of motors vibration as measured at motor bearings shall be within the limits specified in IS: 12075.

4.0 **CONSTRUCTIONAL FEATURES**

4.1 Indoor motors shall conform to degree of protection IP: 54 as per IS: 4691. Outdoor or semi-indoor motors shall conform to degree of protection IP: 55 as per IS: 4691and shall be of weather-proof construction. Outdoor motors shall be installed under a suitable canopy

4.2 Motors upto 160KW shall have Totally Enclosed Fan Cooled (TEFC) enclosures, the method of cooling conforming to IC-0141 or IC-0151 of IS: 6362.

Motors rated above 160 KW shall be Closed Air Circuit Air (CACA) cooled

4.3 Motors shall be designed with cooling fans suitable for both directions of rotation.

4.4. Motors shall not be provided with any electric or pneumatic operated external fan for cooling the motors.

4.5 Frames shall be designed to avoid collection of moisture and all enclosures shall be provided with facility for drainage at the lowest point.

4.6 In case Class 'F' insulation is provided for LV motors, temperature rise shall be limited to the limits applicable to Class 'B' insulation.
In case of continuous operation at extreme voltage limits the temperature limits specified in table-1 of IS:325 shall not exceed by more than 10°C.

4.7 **Terminals and Terminal Boxes**

4.7.1 Terminals, terminal leads, terminal boxes, windings tails and associated equipment shall be suitable for connection to a supply system having a short circuit level, specified in the Data Sheet-A.

Unless otherwise stated in Data Sheet-A, motors of rating 110 kW and above will be controlled by circuit breaker and below 110 kW by switch fuse-contactor. The terminal box of motors shall be designed for the fault current mentioned in data sheet "A".

4.7.2 unless otherwise specified or approved, phase terminal boxes of horizontal motors shall be positioned on the left hand side of the motor when viewed from the non-driving end.

4.7.3 Connections shall be such that when the supply leads R, Y & B are connected to motor terminals A B & C or U, V & W respectively, motor shall rotate in an anticlockwise direction when viewed from the non-driving end. Where such motors require clockwise rotation, the supply leads R, Y, B will be connected to motor terminals A, C, B or U W & V respectively.

4.7.4 Permanently attached diagram and instruction plate made preferably of stainless steel shall be mounted inside terminal box cover giving the connection diagram for the desired direction of rotation and reverse rotation.

4.7.5 Motor terminals and terminal leads shall be fully insulated with no bar live parts. Adequate space shall be available inside the terminal box so that no difficulty is encountered for terminating the cable specified in Data Sheet-A.

4.7.6 Degree of protection for terminal boxes shall be IP 55 as per IS 4691.

4.7.7 Separate terminal boxes shall be provided for space heaters.. If this is not possible in case of LV motors, the space heater terminals shall be adequately segregated from the main terminals in the main terminal box. Detachable gland plates with double compression brass glands shall be provided in terminal boxes.

4.7.8. Phase terminal boxes shall be suitable for 360 degree of rotation in steps of 90 degree for LV motors.

4.7.9 Cable glands and cable lugs as per cable sizes specified in Data Sheet-A shall be included. Cable lugs shall be of tinned Copper, crimping type.

4.8 Two separate earthing terminals suitable for connecting G.I. or MS strip grounding conductor of size given in Data Sheet-A shall be provided on opposite sides of motor frame. Each terminal box shall have a grounding terminal.

4.9 **General**

4.9.1 Motors provided for similar drives shall be interchangeable.

4.9.2 Suitable foundation bolts are to be supplied alongwith the motors.

4.9.3 Motors shall be provided with eye bolts, or other means to facilitate safe lifting if the weight is 20Kgs. and above.

4.9.4 Necessary fitments and accessories shall be provided on motors in accordance with the latest Indian Electricity rules 1956.

4.9.5 All motors rated above 30 kW shall be provided with space heaters to maintain the motor internal air temperature above the dew point. Unless otherwise specified, space heaters shall be suitable for a supply of 240V AC, single phase, 50 Hz.

4.9.6 Name plate with all particulars as per IS: 325 shall be provided

4.9.7 Unless otherwise specified, the colour of finish shall be grey to Shade No. 631 and 632 as per IS:5 for motors installed indoor and outdoor respectively. The paint shall be epoxy based and shall be suitable for withstanding specified site conditions.

5.0 INSPECTION AND TESTING

5.1 All materials, components and equipments covered under this specification shall be procured, manufactured, as per the BHEL standard quality plan No. PED-506-00-Q-006/0 and PED-506-00-Q-007/2 enclosed with this specification and which shall be complied.

5.2 LV motors of type-tested design shall be provided. Valid type test reports not more than 5 year shall be furnished. In the absence of these, type tests shall have to be conducted by manufacturer without any commercial implication to purchaser.

5.3 All motors shall be subjected to routine tests as per IS: 325 and as per BHEL standard quality plan.

5.4 Motors shall also be subjected to additional tests, if any, as mentioned in Data Sheet A.

6.0 DRAWINGS TO BE SUBMITTED AFTER AWARD OF CONTRACT

a) OGA drawing showing the position of terminal boxes, earthing connections etc.
b) Arrangement drawing of terminal boxes.
c) Characteristic curves:
(*To be given for motor above 55 kW unless otherwise specified in Data Sheet*).

i) Current vs. time at rated voltage and minimum starting voltage.
ii) Speed vs. time at rated voltage and minimum starting voltage.
iii) Torque vs. speed at rated voltage and minimum voltage.
For the motors with solid coupling the above curves i), ii), iii) to be furnished for the motors coupled with driven equipment. In case motor is coupled with mechanical equipment by fluid coupling, the above curves shall be furnished with and without coupling.
iv) Thermal withstand curve under hot and cold conditions at rated voltage and max. permissible voltage.

CLAUSE NO.

QUALITY ASSURANCE

MOTOR

TESTS/CHECKS / TEMS/COMPONENTS	Visual	Dimensional	Make/Type/Rating /General Physical Inspection	Mech/Chem. Properties	NDT /DP/MPI/UT	Metallography	Electrical Characteristics	Welding/Brazing(WPS/PQR)	Heat Treatment
Plates for stator frame, end shield, spider etc.	Y	Y	Y	Y	Y				Y
Shaft	Y	Y	Y	Y	Y	Y			Y
Magnetic Material	Y	Y	Y	Y			Y		
Rotor Copper/Aluminium	Y	Y	Y	Y			Y		Y
Stator copper	Y	Y	Y	Y			Y		Y
SC Ring	Y	Y	Y	Y	Y		Y	Y	Y
Insulating Material	Y		Y	Y			Y		
Tubes, for Cooler	Y	Y	Y	Y	Y				Y
Sleeve Bearing	Y	Y	Y	Y	Y				Y
Stator/Rotor, Exciter Coils	Y	Y	Y				Y	Y	
Castings, stator frame, terminal box and bearing housing etc.	Y	Y	Y	Y	Y			Y	
Fabrication & machining of stator, rotor, terminal box	Y	Y			Y			Y	Y
Wound stator	Y	Y					Y	Y	
Wound Exciter	Y	Y					Y	Y	
Rotor complete	Y	Y					Y		
Exciter, Stator, Rotor, Terminal Box assembly	Y	Y					Y		
Accessories, RTD, BTD,CT, Space heater, antifriction bearing, gaskets etc.	Y	Y	Y						
Complete Motor	Y	Y	Y						

CLAUSE NO.

QUALITY ASSURANCE

TESTS/CHECKS / ITEMS/COMPONENTS	Magnetic Characteristics	Hydraulic/Leak/Pressure Test	Thermal Characteristics	Run out	Dynamic Balancing	Routine & Acceptance tests as per IS-325/IS-4722 /IS-9283/IS 2148/IEC60034\IEC 60079-1	vibration	Over speed	Tan delta, shaft voltage & polarization index test	Paint shade, thickness & adhesion
Plates for stator frame, end shield, spider etc.										
Shaft										
Magnetic Material	Y		Y							
Rotor Copper/Aluminium										
Stator copper			Y							
SC Ring										
Insulating Material			Y							
Tubes for Cooler		Y								
Sleeve Bearing		Y								
Stator/Rotor, Exciter Coils										
Castings, stator frame, terminal box and bearing housing etc.										
Fabrication & machining of stator, rotor, terminal box										
Wound stator										
Wound Exciter										
Rotor complete				Y	Y					
Exciter, Stator, Rotor, Terminal Box assembly										
Accessories, RTD, BTD,CT, , Space heater, antifriction bearing, gaskets etc.										
Complete Motor						Y	Y	Y	Y1	Y

CLAUSE NO.	QUALITY ASSURANCE

Note: 1. This is an indicative list of tests/checks. The manufacture is to furnish a detailed Quality Plan indicating the practices & Procedure followed along with relevant supporting documents during QP finalization. However, No QP for LT motor upto 50KW.

2. Additional routine tests for Flame proof motors shall be applicable as per relevant standard
3. Makes of major bought out items for HT motors will be subject to NTPC approval.
4. For semi hermetically / hermetically sealed screw compressor motors following tests / checks will be carried out:
   a) Check on stator and rotor dimensions before assembly
   b) Phase currents i.e. Ir, Ib, Iy at 415 V during free air run test of compressor (compressor manufacturer to clearly state the tolerances expected in currents as per their internal plant standard)
   c) Motor protective devices function check
   d) HV test at 1830 V for 1 minute
   e) IR test at 500 V DC

Y1 = for HT Motor / Machines only.

a) Less than 30 KW

Acceptance of Motor less than 30 KW is based on COC of the manufacturer & the contractor confirming as follows:
It is hereby confirmed that the above mentioned motor /motors was/ were manufactured taking care of NTPC specific requirements regarding ambient temp., voltage & frequency variation, hot starts, pull out torque, starting KVA/KW, temp. rise, distance between centre of stud & gland plate and tested in accordance with approved drawing /data sheets.

b) 30 KW and above & upto 50 KW

Acceptance of Motor rating between 30 KW & 50 KW is based on NTPC review of Routine Test inspection report as per IS 325 witnessed by main contractor along with COC of the manufacturer & the contractor confirming as follows:
It is hereby confirmed that the above mentioned motor /motors was/ were manufactured taking care of NTPC specific requirements regarding ambient temp., voltage & frequency variation, hot starts, pull out torque, starting KVA/KW, temp. rise, distance between centre of stud & gland plate, space heater and tested in accordance with approved drawing /data sheets.

More than 50 KW: As per approved QP.

CLAUSE NO.	TECHNICAL REQUIREMENTS
	Each cable vault should have at least two doors. Exit signs shall be provided near doors for personnel escape in case of emergency
2.01.06	**Boiler Area** Two separate cable routes one on each side shall be provided for each boiler unit. Cables for on set of auxiliaries such as ID, FD, PA fan & half of the coal mills shall be routed in one route & for other set of auxiliaries through other route. Cable trays in boiler & ESP area shall be supported from the boiler and ESP structures. The same shall be coordinated with SG/ESP contractor. Cable trays in these areas shall be in vertical formation to avoid dust accumulation. No cable trenches shall be provided in boiler/ESP area.
2.01.07	**Turbine Hall Area** a)Two separate cable routes shall be provided for cable routing of working and standby drives or different set/group (say 50% capacity) of auxiliaries.
2.01.08	**OffSite Area** In offsite pumphouses, overhead cable tray arrangement shall be followed. However cable trenches may be considered below switchgear/mcc. Trestle In fuel oil pump house, overhead cable tray arrangement shall be provided. RCC trenches provided in MCC room shall be separated from fuel oil area to avoid oil accumulation.
2.01.09	The cable slits to be used for motor/equipment power/control supply shall be sand filled & covered with PCC after cabling.
2.01.10	Sizing criteria, derating factors for the cables shall be met as per respective chapters. However for the power cables, the minimum conductor size shall be 6 sq.mm. for aluminium conductor and 2.5 sq.mm. for copper conductor cable.
2.01.11	Conscious exceptions to the above guidelines may be accepted under special conditions but suitable measures should be taken at such location to: • Meet all safety requirements • Safeguard against fire hazards, mechanical damage, flooding of water, oil accumulation, electrical faults/interferences, etc
3.00.00	**EQUIPMENT DESCRIPTION**
3.01.00	**Cable trays, Fittings & Accessories**
3.01.01	Cable trays shall be ladder/perforated type as specified complete with matching fittings (like brackets, elbows, bends, reducers, tees, crosses, etc.) accessories (like side coupler plates, etc. and hardware (like bolts, nuts, washers, G.I. strap, hook etc.) as required. Cable tray shall be ladder type for power & control cables and perforated for instrumentation cables.
3.01.02	Cable trays, fittings and accessories shall be fabricated out of rolled mild steel sheets free from flaws such as laminations, rolling marks, pitting etc. These (including hardware) shall be hot dip galvanized as per Clause No. 3.13.00 of this chapter.

CLAUSE NO.	TECHNICAL REQUIREMENTS
3.01.03	Cable trays shall have standard width of 150 mm, 300 mm & 600 mm and standard lengths of 2.5 metre. Thickness of mild steel sheets used for fabrication of cable trays and fittings shall be 2 mm. The thickness of side coupler plates shall be 3 mm.
3.01.04	Cable troughs shall be required for branching out few cables from main cable route. These shall be U-shaped, fabricated of mild steel sheets of thickness 2 mm and shall be hot dip galvanised as per Clause No. 3.13.00 of this chapter. Troughs shall be standard width of 50 mm & 75 mm with depth of 25 mm.
3.01.05	The tolerance for cable tray and accessories shall be as per IS 2102 (Part-1). Tolerance Class: - Coarse
3.02.00	**Support System for Cable Trays**
3.02.01	Cable tray support system shall be pre-fabricated out of single sheet as per enclosed tender drawings.
3.02.02	Support system for cable trays shall essentially comprise of the two components i.e. main support channel and cantilever arms. The main support channel shall be of two types : (i) C1:- having provision of supporting cable trays on one side and (ii) C2:-having provision of supporting cable trays on both sides. The support system shall be the type described hereunder a. Cable supporting steel work for cable racks/cables shall comprise of various channel sections, cantilever arms, various brackets, clamps, floor plates, all hardwares such as lock washers, hexagon nuts, hexagon head bolt, support hooks, stud nuts, hexagon head screw, channel nut, channel nut with springs, fixing studs, etc. b. The system shall be designed such that it allows easy assembly at site by using bolting. All cable supporting steel work, hardwares fitings and accessories shall be prefabricated factory galvanised. c. The main support and cantilever arms shall be fixed at site using necessary brackets, clamps, fittings, bolts, nuts and other hardware etc. to form various arrangements required to support the cable trays. Welding of the components shall not be allowed. However, welding of the bracket (to which the main support channel is bolted) to the overhead beams, structural steel, insert plates or reinforcement bars will be permitted. Any cutting or welding of the galvansied surface shall be brushed and red lead primer, oil primer & aluminium paint shall be applied d. All steel components, accessories, fittings and hardware shall be hot dip galvanised after completing welding, cutting, drilling and other machining operation. e. The typical arrangement of flexible support system is shown in the enclosed drawings and described briefly below: The main support channel and cantilever arms shall be fabricated out of 2.5 thick rolled steel sheet conforming to IS 1079. f. Cantilever arms of 320 mm, 620mm and 750 mm in length are required, and shall be as shown in the enclosed drawing. The arm portion shall be suitable for assembling the complete arm assembly on to component constructed of standard channel section. The back plate shall allow sufficient clearance for fixing bolt to be tightened with tray in position. g. Support system shall be able to withstand

CLAUSE NO.	TECHNICAL REQUIREMENTS
	• weight of the cable trays • weight of the cables (75 Kg/Metre run of each cable tray) • Concentrated load of 75 Kg between every support span. • Factor of safety of minimum 1.5 shall be considered.
3.02.03	The size of structural steel members or thickness of sheet steel of main support channel and cantilever arms and other accessories as indicated above or in the enclosed drawings are indicative only. Nevertheless, the support system shall be designed by the bidder to fully meet the requirements of type tests as specified. In case the system fails in the tests, the components design modification shall be done by the Bidder without any additional cost to the Employer. The bidder shall submit the detailed drawings of the system offered by him alongwith the bid.
3.02.04	Four legged structure shall be provided wherever there is change in elevation and change in direction
3.03.04	FOR COAL, LIMESTONE AND GYPSUM HANDLING PLANT THE FOLLOWING SHALL ALSO BE APPLICABLE: a) All overhead cable routes shall be along the route of the conveyor gallery on separate supporting structures and cables shall be laid in vertical trays. The bottom of the steel shall be such that the existing facilities, movement of trucks/human beings etc. does not get affected. The cable trestle shall have a minimum 600mm clear walk way and shall have maintenance platforms as required. The bottom of the steel supporting structure shall be generally at 3.0M above the grade level except for rail/road crossings where it shall be at 8.0M above grade level. Tap offs from the overhead cable trestle can be through shallow trenches with prior approval of the Employer. Directly buried cable, if essential, shall not have concentration of more than 4 cables on one route. b) Cable trenches shall be provided only in Switchgear/MCC rooms. c) Cables shall not be routed through the conveyor galleries except for the equipment located in the conveyor galleries for a particular conveyor i.e. protection switches, receptacles etc. d) Cables for PCS and BSS shall be routed along the conveyors through GI conduits.
3.04.00	**Pipes, Fittings & Accessories**
3.03.01	Pipes offered shall be complete with fittings and accessories (like tees, elbows, bends, check nuts, bushings, reducers, enlargers, coupling caps, nipples etc.) The size of the pipe shall be selected on the basis of maximum 40% fill criteria
3.03.02	GI Pipes shall be of medium duty as per IS: 1239
3.03.03	Duct banks shall be PVC conduits encased in PCC (10% spare of each size, subject to minimum one) with suitable water-proof manholes and with proper sealing arrangement consisting of fire retardant sealing compound.
3.03.04	Hume pipes shall be NP3 type as per IS 458.
3.03.05	TERNE Coated Flexible Steel Conduits shall be water proof and rust proof made of heat resistant lead coated steel. Conduit diameter shall be uniform throughout its length. Internal surface of the conduit shall be free from burrs and sharp edges. Conduits shall be complete

CLAUSE NO.	TECHNICAL REQUIREMENTS
	with necessary accessories for proper termination of the conduit with junction boxes and lighting fixtures.
3.03.06	HDPE pipes and conduits shall be PE-80, PN-10 type as per IS 4984/IS 8008 Part-I.
3.04.00	**Junction Boxes**
3.04.01	Junction box shall be made of Fire retardant material. Material of JB shall be Thermoplastic or thermosetting or FRP type. The box shall be provided with the terminal blocks, mounting bracket and screws etc. The cable entry shall be through galvanized steel conduits of suitable diameter. The JB shall have suitable for installing glands of suitable size on the bottom of the box. The JB shall be suitable for surface mounting on ceiling/structures. The JB shall be of grey color RAL 7035. All the metal parts shall be corrosion protected. Junction box surface should be such that it is free from crazings, blisterings, wrinkling, colour blots/striations. There should not be any mending or repair of surface. JB's will be provided with captive screws so that screws don't fall off when cover is opened. JB's mounting brackets should be of powder coated MS. Type test reports for the following tests shall be furnished:- (a) Impact resistance for impact energy of 2 Joules (IK07)as per BS EN50102 (b) Thermal ageing at 70deg C for 96 hours as per IEC60068-2-2Bb. (c) Class of protection shall be IP 55. (d) HV test.
3.04.02	Terminal blocks shall be 1100V grade, of suitable current rating, made up of unbreakable polyamide 6.6 grade. The terminals shall be screw type or screw-less (spring loaded) / cage clamp type with lugs. Marking on terminal strips shall correspond to the terminal numbering in wiring diagrams. All metal parts shall be of non-ferrous material. In case of screw type terminals the screw shall be captive, preferably with screw locking design. All terminal blocks shall be suitable for terminating on each side the required cables/wire size. All internal wiring shall be of cu. Conductor PVC wire.
3.05.00	**Terminations & Straight Through Joints**
3.05.01	Termination and jointing kits for 33kV, 11 kV, 6.6 KV and 3.3 kV grade XLPE insulated cables shall be of proven design and make which have already been extensively used and type tested. Termination kits and jointing kits shall be Pre-moulded type or heat shrinkable type. Further Cold shrinkable type termination and jointing kits are also acceptable. The Cold shrinkable type kits shall be type tested as per relevant standards. Calculation to withstand the required fault level shall also be furnished in case of cold shrinkable type kits. 33 kV, 11 kV, 6.6 KV and 3.3kV grade joints and terminations shall be type tested and Type test reports as per IS:13573 Part-II and IEC60502 shall be furnished. Also, heat shrink material shall comply with requirements of ESI 09-13 (external tests). Critical components used in cable accessories shall be of tested and proven quality as per relevant product specification/ESI specification. Cable joints and terminations should be with FRLS properties as per IEC 60754-1&2. Kit contents shall be supplied from the same source as were used for type testing. The kit shall be complete with the tinned copper solderless crimping type cable lugs & ferrule or mechanical connectors (wherein bolts are tightened that shear off at an appropriate torque) as per DIN standard suitable for aluminium compacted conductor cables. (Tender drg. no 0000-211-POE -A-51-RA of cable lug attached at the end of this chapter)..
3.05.02	Straight through joint and termination shall be capable of withstanding the fault level of 21 KA for 0.12 Sec. with dynamic peak of 52 KA for 33 KV system & of 40 kA for 0.12 sec with a dynamic peak of 100 kA for 11 kV, 6.6 KV & 3.3 KV system. Straight through joints shall

CLAUSE NO.	TECHNICAL REQUIREMENTS
	have provisions for shield connection and earthing wherever required and complete with all accessories and consumables suitable for storage without deterioration at a temperature of 50 deg. C with shelf life of more than five years. 1.1 kV grade straight through joints shall also be of proven design
3.05.03	1.1 KV grade Straight Through Joint shall be of proven design.
3.06.00	**Cable glands**
3.06.01	Cable shall be terminated using double compression type cable glands. Testing requirements of Cable glands shall conform to BS:6121 and gland shall be of robust construction capable of clamping cable and cable armour (for armoured cables) firmly without injury to insulation. Cable glands shall be made of heavy duty brass machine finished and nickel chrome plated. Thickness of plating shall not be less than 10 micron. All washers and hardware shall also be made of brass with nickel chrome plating Rubber components shall be of neoprene or better synthetic material and of tested quality. Cable glands shall be suitable for the sizes of cable supplied/erected.
3.07.00	**Cable lugs/ferrules**
3.07.01	Cable lugs/ferrules for power cables shall be tinned copper solderless crimping type suitable for aluminium compacted conductor cables. Cable lugs and ferrules for control cables shall be tinned copper type. The cable lugs for control cables shall be provided with insulating sleeve and shall suit the type of terminals provided on the equipments. Cable lugs and ferrule shall conform to DIN standards.
3.08.00	**Trefoil clamps**
3.08.01	Trefoil clamps for single core cables shall be pressure die cast aluminum or fibre glass or nylon and shall include necessary fixing accessories like G.I. nuts, bolts, washers, etc. Trefoil clamps shall have adequate mechanical strength, when installed at 1 mtr intervals, to withstand the forces generated by the peak value of maximum system short circuit current.
3.09.00	**Cable Clamps & Ties**
3.09.01	The cable clamps/ties required to clamp multicore cables shall be of SS-316 material, 12mm wide, polyster coated ladder lock type. The clamps/ties shall have self locking arrangement & shall have sufficient strength. The cable clamps/ties shall be supplied in finished individual pieces of suitable length to meet the site requirements.
3.10.00	**Receptacles**
3.10.01	Receptacles boxes shall be fabricated out of MS sheet of 2mm thickness and hot dipped gavanised or of die-cast aluminium alloy of thickness not less than 2.5 mm. The boxes shall be provided with two nos. earthing terminals, gasket to achieve IP55 degree of protection, terminal blocks for loop-in loop-out for cable of specified sizes, mounting brackets suitable for surface mounting on wall/column/structure, gland plate etc. The ON-OFF switch shall be rotary type heavy duty, double break,AC23 category, suitable for AC supply. Plug and Socket shall be shrouded Die-cast aluminium. Socket shall be provided with lid safety cover. Robust mechanical interlock shall be provided such that the switch can be put ON only when the plug is fully engaged and plug can be withdrawn only when the switch is in OFF position. Also cover can be opened only when the switch is in OFF position. Wiring shall be carried out with 1100 V grade PVC insulated stranded aluminium/copper wire of adequate size. The Terminal blocks shall be of 1100 V grade. The Terminal blocks shall be of 1100 V grade made up of unbreakable polymide 6.6 grade with adequate current rating and size. The welding receptacles shall be provided with RCCB/RCD of 30mA sensitivity having facility for manual testing/checking of operation of RCCB/RCD

CLAUSE NO.	TECHNICAL REQUIREMENTS
3.12.00	**Cable Drum Lifting Jack**
	The jack for cable drum lifting shall be of screw type with 10 ton capacity. The cable drum jacks shall be manufactured from fabricated steel. The spindles supplied with the cable drum jack shall be manufactured using BSEN-24 grade steel bar with locking collars. Jack nests shall be of SG cast steel. Cable drum jack supplied shall have undergone load testing and reports for the same shall be submitted. At least Two Nos. of jacks shall be supplied for NTPC use. Contractor has to make arrangements for his own jacks for cable reeling/unreeling under his scope of installation.
3.13.00	**Galvanising**
3.13.01	Galvanising of steel components and accessories shall conform to IS:2629 , IS4759 & IS:2633. Additionally galvanising shall be uniform, clean smooth, continuous and free from acid spots.
3.13.02	The amount of zinc deposit over threaded portion of bolts, nuts, screws and washers shall be as per IS:1367 . The removal of extra zinc on threaded portion of components shall be carefully done to ensure that the threads shall have the required zinc coating on them as specified
3.14.00	**Welding**
3.14.01	The welding shall be carried out in accordance with IS:9595. All welding procedures and welders qualification shall also be followed strictly in line with IS:9595
4.00.00	**INSTALLATION**
4.01.00	**Cable tray and Support System Installation**
4.01.01	Cables shall run in cable trays mounted horizontally or vertically on cable tray support system which in turn shall be supported from floor, ceiling, overhead structures, trestles, pipe racks, trenches or other building structures.
4.01.02	Horizontally running cable trays shall be clamped by bolting to cantilever arms and vertically running cable trays shall be bolted to main support channel by suitable bracket/clamps on both top and bottom side rails at an interval of 2000 mm in general. For vertical cable risers/shafts cable trays shall be supported at an interval of 1000mm in general. Fixing of cable trays to cantilever arms or main support channel by welding shall not be accepted. Cable tray installation shall generally be carried out as per the approved guidelines/ drawings. Vendor shall design the support system along with tray, spacing etc in line with tray loadings/drawings.
4.01.03	The cantilever arms shall be positioned on the main support channel with a minimum vertical spacing of 300 mm unless otherwise indicated.
4.01.04	The contractor shall fix the brackets/ clamps/ insert plates using anchor fasteners. Minimum size of anchor fasteners shall be M 8 X 50 and material shall be stainless steel grade 316 or better. Anchor fastener shall be fixed as recommended by manufacturer and as approved by site engineer. For brick wall suitable anchor fasteners shall be used as per the recommendations of manufacturer. Make of anchor fasteners subject to QA approval and the same shall be finalized at pre-award stage.
4.01.05	All cable way sections shall have identification, designations as per cable way layout drawings and painted/stenciled at each end of cable way and where there is a branch connection to another cable way. Minimum height of letter shall be not less than 75 mm. For long lengths of trays, the identification shall be painted at every 10 meter. Risers shall additionally be painted/stenciled with identification numbers at every floor.

CLAUSE NO.	TECHNICAL REQUIREMENTS
4.01.06	In certain cases it may be necessary to site fabricate portions of trays, supports and other non standard bends where the normal prefabricated trays, supports and accessories may not be suitable. Fabricated sections of trays, supports and accessories to make the installation complete at site shall be neat in appearance and shall match with the prefabricated sections in the dimensions. They shall be applied with one coat of red lead primer, one coat of oil primer followed by two finishing coats of aluminium paint.
4.02.00	**Conduits/Pipes/Ducts Installation**
4.02.01	The Contractor shall ensure for properly embedding conduit pipe sleeves wherever necessary for cabling work. All openings in the floor/roof/wall / cable tunnel/cable trenches made for conduit installation shall be sealed and made water proof by the Contractor.
4.02.02	GI pull wire of adequate size shall be laid in all conduits before installation. Metallic conduit runs at termination shall have two lock nuts wherever required for junction boxes etc.
4.02.03	Conduit runs/sleeves shall be provided with PVC bushings having round edge at each end. All conduits/pipes shall have their ends closed by caps until cables are pulled. After cables are pulled, the ends of conduits/pipes shall be sealed with Glass wool/Cement Mortar/Putty to prevent entrance of moisture and foreign material
4.02.04	Exposed conduit/pipe shall be adequately supported by racks, clamps, straps or by other approved means. Conduits /pipe support shall be installed square and true to line and grade with an average spacing between the supports as given below, unless specified otherwise **Conduit /pipe size (dia).** — **Spacing** Upto 40 mm — 1 M 50 mm — 2.0 M 65-85 mm — 2.5 M 100 mm and above — 3.0 M
4.02.05	For bending of conduits, bending machine shall be arranged at site by the contractor to facilitate cold bending. The bends formed shall be smooth.
4.03.00	**Junction Boxes Installation**
4.03.01	Junction boxes shall be mounted at a height of 1200mm above floor level or as specified in the drawings and shall be adequately supported/mounted on masonry wall by means of anchor fasteners/ expandable bolts or shall be mounted on an angle, plate or other structural supports fixed to floor, wall, ceiling or equipment foundations.
4.04.00	**Cable Installation**
4.04.01	Cable installation shall be carried out as per IS:1255 and other applicable standards.
4.04.02	For Cable unloading, pulling etc following guidelines shall be followed in general: a) Cable drums shall be unloaded, handled and stored in an approved manner on hard and well drained surface so that they may not sink. In no case shall be drum be stored flat i.e. with flange horizontal. Rolling of drums shall be avoided as far as possible. For short distances, the drums may be rolled provided they are rolled slowly and in proper direction as marked on the drum. In absence of any indication, the drums may be rolled in the same direction as it was rolled during taking up the cables. For unreeling the cable, the drum shall be mounted on suitable jacks or on

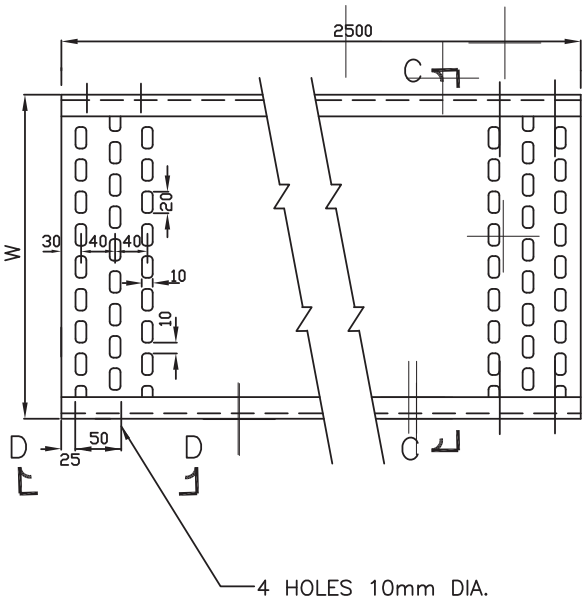

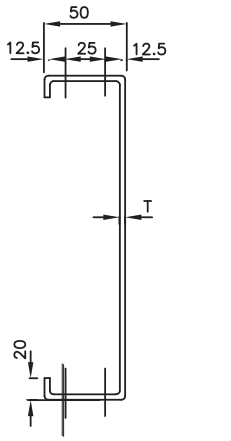

SECTION–CC
(100/50 TRAYS)

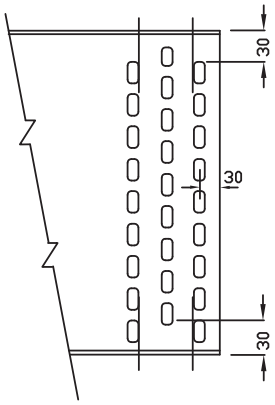

ARRANGEMENT OF PERFORATIONS

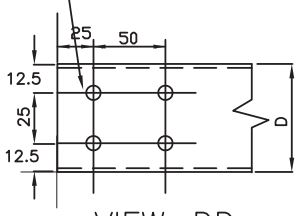

VIEW–DD
(100,50W TRAYS)

TRAY WIDTH W (mm)	100	50
TRAY DEPTH D (mm)	50	50
T (mm)	2	2

PERFORATED TYPE TRAY

TYPICAL DETAILS OF CABLE TRAYS AND ACCESSORIES

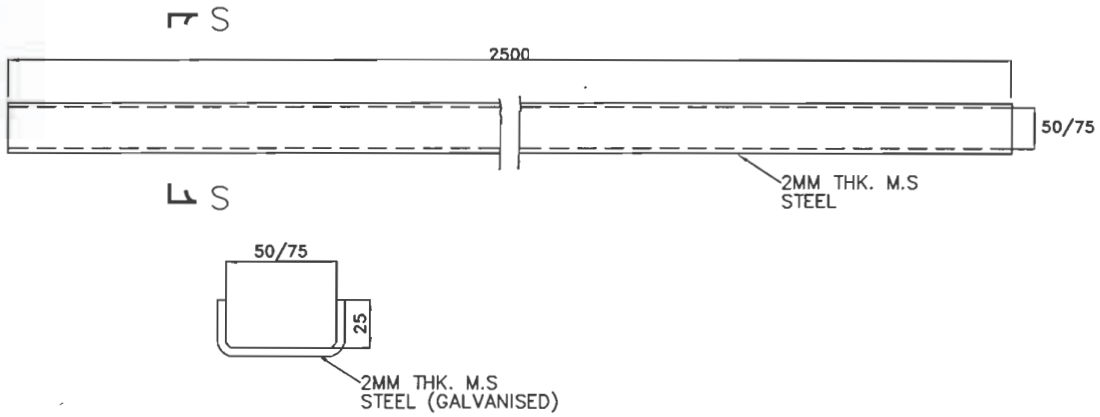

SECTION S–S

CABLE TROUGHS

TYPICAL DETAILS OF
CABLE TRAY AND ACCESSORIES

714406/2022/PS-PEM-MAX

GENERAL TECHNICAL REQUIREMENT – C&I

FORM NO. PEM-6666-0

BHEL	**SPECIFICATION FOR CONTROL & INSTRUMENTATION FOR AUX PACKAGES**	SPECIFICATION NO.:
		VOLUME
		SUB SECTION
		REV. NO. / DATE :
		SHEET / OF

GENERAL REQUIREMENT

1.0 Bidder shall provide complete and independent control & instrumentation system with all accessories, auxiliaries and associated equipments for the safe, efficient and reliable operation of auxiliary systems.

2.0 The quantity of instruments for auxiliary system shall be as per tender P &ID wherever provided of the respective system as a minimum, for bidding purpose. However, Bidder shall also include in his proposal all the instruments and devices that are needed for the completeness of the plant auxiliary system/ equipment supplied by the bidder, even if the same is not specifically appearing in the P & ID. During detail engineering if any additional instruments are required for safe & reliable operation of plant, bidder shall supply the same without any price implication.

3.0 Measuring instruments/equipment and subsystems offered by the bidder shall be from reputed experienced manufacturers of specified type and range of equipment, whose guaranteed and trouble free operation has been proven. Further all the instruments shall be of proven reliability, accuracy, and acceptable international standards and shall be subject to employer's approval. All instrumentation equipment and accessories under this specification shall be furnished as per technical specification, ranges, makes/ numbers as approved by the employer' during detail engineering.

4.0 The necessary root valves, impulse piping, drain cocks, gauge-zeroing cocks, valve manifold and all the other accessories required for mounting/ erection of these local instruments shall be furnished, even if not specifically asked for, on as required basis. The contacts of equipment mounted instruments; sensors, switches etc for external connection including spare contacts shall be wired out to suitably located junction boxes.

5.0 The customer specification attached as Specific Technical Requirement will supercede the Data sheets, if there is any mismatch.

	C&I SPECIFICATION FOR CPU SYSTEM	SECTION: C SUB SECTION: C&I

MEASURING INSTRUMENTS

1.00.00	**MEASURING INSTRUMENTS (PRIMARY AND SECONDARY)**
1.01.00	Measuring instruments/equipment and subsystems offered by the Bidder shall be from reputed experienced manufacturers of specified type and range of equipment, whose guaranteed and trouble free operation has been proven. Refer Sub-section Basic Design Criteria. Further, all instruments shall be of proven reliability, accuracy, and repeatability requiring a minimum of maintenance and shall comply with the acceptable international standards and shall be subject to Employer's approval.
1.02.00	Every panel-mounted instrument requiring power supply shall be provided with easily replaceable glass cartridge fuses of suitable rating. Every instrument shall be provided with a grounding terminal and shall be suitably connected to the panel grounding bus.
1.03.00	All transmitters, sensors, switches and gauges for parameters like pressure, temperature, level, flow etc. as required for the safe and efficient operation and maintenance as well as for operator and management information (including all computation) of equipment in the system under the scope of specification shall be provided on as required basis with in quoted lump sum price. The Contractor shall furnish all Instrumentation / Control equipment & accessories under this specification as per technical specification, ranges, makes & model as approved by the Employer during detailed engineering.
1.04.00	The necessary root valves, impulse piping, drain cocks, gauge-zeroing cocks, valve manifolds and all the other accessories required for mounting/erection of these local instruments shall be furnished, even if not specifically asked for, on as required basis. The contacts of equipment mounted instruments, sensors, switches etc. for external connection including spare contacts shall be wired out in flexible/rigid conduits, independently to suitably located common junction boxes. The proposal shall include the necessary cables, flexible conduits, junction boxes and accessories for the above purpose. Double root valves shall be provided for all pressure tapping where the pressure exceeds 40 Kg./sq.cm.
1.05.00	All instruments envisaged for sea water applications, shall be provided with wetted parts made of Monel/ Hastelloy C or any other material (if provenness experience of the proposed material for such applications is established by contractor). For Chlorine application: Instruments shall be provided with wetted parts (e.g. diaphragm seal, etc.) made of Hastelloy C. Also, filled liquid shall be Fluorolube oil/ Inert Hydrocarbon / CTFE etc., for these applications. For applications of FECL3 solution: Instruments shall be provided with wetted parts (e.g. diaphragm seal, etc.) made of Tantalum.
1.06.00	For coastal areas, all instruments shall be provided with durable epoxy/ polyurethane coating for housings and all exposed surfaces of the instruments.
1.07.00	The instruments which are proposed to be used for PG test as indicated in the tender P&IDs shall meet the minimum requirements specified in ASME PTC or subsequent clauses in this chapter whichever is better.

2.00.00 **SPECIFICATION FOR ELECTRONIC TRANSMITTERS**

2.01.00 **SPECIFICATION FOR ELECTRONIC TRANSMITTER FOR PRESSURE, DIFF PRESS AND DP BASED FLOW / LEVEL MEASUREMENTS**

Sl.No.	Features	Essential/Minimum Requirements
1.	Type of Transmitter	Microprocessor based 2 wire type (loop powered), Hart protocol compatible.
2	Output signal	4-20 mA DC (Analog) along with superimposed digital signal based on HART protocol
3	Accuracy	± 0.060 % of calibrated range (minimum) for calibrated range greater than 400 mmwc. +0.065% of calibrated range (minimum) for calibrated range greater than 250 kg/cm2. ± 0.10 % of calibrated range (minimum) for calibrated range less than 400 mmwc
4.	Turn down (minimum)	50:1 for greater than or equal to span of 400mmwcl. 20:1 for span below 400mmwcl. 10:1 for span greater than 250 kg/cm2
5.	Stability	0.25 % of calibrated range for 10 years for calibrated range greater than equal to 400 mmwc on standard conditions of manufacturer. 0.2 % of calibrated range for 1 years for calibrated range less than 400 mmwc on standard conditions of manufacturer. 0.15% of calibrated range for 5 years for static pressure greater than 250 kg/cm2.

(Above mentioned (3,4,5) parameters/features of offered models shall be strictly as defined in standard published catalogue of the manufacturer only).

6.	Zero and span drift	+/- 0.015 per degC at max span +/-0.11% per degC at min. Span
	Power Supply	24V DC ± 10%.
7.	Load impedance	500 ohm (minimum)
8.	Housing	Weather proof as per IP-67, metallic housing with durable corrosion resistant coating

9.	Over Pressure	150% of max. Operating pressure
10.	Electrical Connection	Plug and socket type except in hazardous area
11.	Process connection	1/2 inch NPT (F)
12.	Span and Zero	Continuous, tamper proof, Remote as well as manual adjustability from instrument with zero suppression and elevation facility.
13.	Accessories	-Diaphragm seal, pulsation dampeners, syphon etc. as required by service and operating condition.
	Diagnostics and Display	Self-Indicating feature and digital display
14.	Accessories	2 valve manifold for absolute & Gauge pressure transmitters, 3-valve manifold for Differential Pressure and 5 valve manifold for Level /Flow applications. The valve manifold shall be non integral type (except Fuel Oil area). -For hazardous area, enclosure as described in NEC article 500 -2 inch pipe for mounting with Enclosure /Rack/Canopy
15.	Certification	SIL 2 or Better
16.	Adjustment/calibration/maintenance	From hand held HART calibrator

Notes

LVDT type is not acceptable.

For primary air/ secondary air/flue gas applications, DP type transmitters shall be provided for pressure measurement below range of 2000 mmwc

Where the process fluids are corrosive, viscous, solid bearing or slurry type, diaphragm seals shall be provided. Parts below the diaphragm shall be removable for cleaning. The entire volume above the diaphragm shall be completely filled with an inert liquid suitable for the application.

2.02.00 **GUIDED WAVE RADAR TYPE LEVEL TRANSMITTER**

Type	Microprocessor based 2 wire type (loop powered), HART protocol compatible Guided wave radar transmitter.
Principle	TDR (Time domain reflectometry)
Probe Type & Material	(i) Coaxial probe of SS316/316L. If required, probe shall be suitable for overfill prevention. (ii) Rod probe, cable probe of SS316/SS316L can be used for applications wherever coaxial probe is not suitable.
Output signal	4-20 mA DC along with superimposed digital signal (based on HART protocol), suitable for over fill prevention.
Accuracy	+/- 0.5% of calibrated span or minimum 5mm.
Power supply	24 VDC +/- 10%.
Housing	Weather proof as per IP-65, metallic housing with durable corrosion resistance coating.
Adjustment/ calibration	Using hand held HART calibrator/ centralized PC based system (as applicable).
Zero & span adjustment	Continuous, temper proof, remote as well as manual adjustability from instrument. It should be possible to calibrate the instrument without any level in the tank/sump etc.
Display	Integral digital display.
Load Impedance	500 ohms (minimum).
Electromagnetic compatibility	Shall meet EN 61326-1 (1997) and AmdtA1, class A equipment/EN 50081-2 & EN 5008 1-2 & EN 50082-2
Mounting	(i) External cage shall be provided where ever side mounting is required. External cage and other mounting accessories to be provided by the contractor.

	(ii) Where ever top mounting is required, all mounting accessories, stilling well (as required) etc., shall be provided by the contractor. (iii) All weather canopy shall be provided for protection from direct sunlight and direct rain for open locations.

Note: Four wire type transmitters can also be provided for applications where 2- wire transmitter has some technical limitations, subject to employer's approval during detailed engineering stage. However, in such cases isolated 4-20 mA DC (analog) output shall be provided. Power supply required for such transmitters shall be 240V AC / 24V DC.

2.03.00 Ultrasonic Type level Transmitter

S.No.	Features	Essential/Minimum requirement
1.	Type of Transmitter	Non-contact Microprocessor based 2 wire type (loop powered), HART protocol compatible Ultrasonic transmitter.
2.	Output signal	4-20 mA DC (Analog) along with superimposed digital signal (based on HART protocol).
3.	Accuracy	+/- 0.5% of calibrated span or minimum 5mm.
4.	Power supply	24 V DC +/- 10%.
5.	Temperature compensation	To be provided within transducer.
6.	Housing	Weather proof as per IP-65, metallic housing with durable corrosion resistance coating.
7.	Adjustment/calibration/ maintenance	Using hand held HART calibrator/ centralized PC based system (as applicable). .
8.	Zero and Span adjustment	Continuous, tamper proof, remote as well as manual adjustability from instrument. It should be possible to calibrate the instrument without any level in the tank/sump etc.

9.	Sensor Material	Corrosion resistant material to suit individual application requirement.
10.	False signal tolerance	Transmitter shall be capable of ignoring false echoes from internal tank/sumps obstructions such as pipes, heating coils or agitator blades. Also transmitter shall have adjustable damping circuitry.
11.	Range	Range of transmitter shall be capable of covering the complete level span of tank taking care of blocking distance, frequency attenuation due to surface, obstructions, vapors etc.
12.	Display	Integral digital display
13.	Diagnostics	Loss of echo alarm etc.
14.	Load Impedance	500 ohms (minimum).
15.	Electrical Connection	Plug and socket
16.	Accessories	• All weather canopy shall be provided for protection from direct sunlight and direct rain for open locations. • All mounting accessories required for erection and commissioning shall be provided. • For hazardous area, explosion proof enclosure as described in NEC article 500

Note:

1) Contractor can also provide Radar type transmitter as per above specification in place of ultrasonic transmitter subject to approval by Employer during detailed Engineering. Sonic frequency based transmitters can also be provided under "ultrasonic transmitters" category for fly ash silo level.

	2) Four wire type transmitters can also be provided for applications where 2- wire transmitter has some technical limitations, subject to employer's approval during detailed engineering stage. However, in such cases isolated 4-20 mA DC (analog) output shall be provided. Power supply required for such transmitters shall be 240V AC / 24V DC. 3) For applications where transmitter location is not accessible, the transmitter shall have separate sensor unit and electronic unit for such applications. It shall be possible to mount the electronic unit at accessible location.
2.04.00	HART Hand Held calibrator Hand held calibrator shall be provided for adjustment/calibration/maintenance of the HART compatible transmitters. The hand held calibrator shall be suitable for all types of transmitters supplied in the package. If one type of hand held type calibrator is not suitable for communicating with all types of transmitters then separate hand held calibrator will be provided for that specific type of transmitter.

3.02.00 **Resistance Temperature Detector (RTD)**

Sr. No.	Features		Essential/Minimum Requirements
1	Type of RTD.	:	Four wire, Pt-100 (100 Ohms resistance at zero degree Centigrade).
2	No. of element	:	Duplex
3	Housing/Head	:	IP-65/Diecast Aluminium. Head of TE to be provided with sufficient space and arrangement to mount head mounted temperature transmitter (as applicable). Plug in connectors are to be provided for external signal cable connection. TE terminal head shall be spring loaded for positive contacts with the thermo well
4	Insulation and sheathing of RTD	:	Mineral (magnesium oxide) insulation and SS316 sheath,
5	Calibration and accuracy	:	As per As per IEC-751/ DIN-43760 Class-A for RTD
6	Accessories	:	Thermo well and associated fittings
7	Standard	:	IEC-751/ DIN-43760 for RTD and ASME PTC-19.3 for Thermo-well.

NOTES :

1) The specifications for RTDs of winding/ bearings of motor/pump, can be as per their manufacturer standards. The manufacturer shall submit the adequate supporting documents for establishing their standard practice. However the type of RTD shall be Pt100.

2) The specifications of temp elements for air conditioning & ventilation system / process can be as per system manufacturer's standards. The manufacturer shall submit the adequate supporting documents for establishing their standard practice.

3.03.00

3.04.00	**Thermo well** (for all process temp. elements) (a) Shall be one piece solid bored type of 316 SS of step-less tapered design. (As per ASME PTC 19.3, 1974)

3.05.00 **Not Used**

3.06.00 **TEMPERATURE TRANSMITTER**

Following specifications are applicable for Dual input/ Single input temperature transmitter.

Temperature transmitter shall be 2-wire (loop powered) directly powered from 4-20mA input cards of DDCMIS. TT shall be fully compatible with thermocouples and RTDs being provided by the contractor. Temperature compensation for thermocouples shall be performed in the temperature transmitter itself.

S No.	Features	Essential/Minimum Requirements
1.	Output	2-wire (power supply from input card of control system) with 4-20mA output with superimposed HART protocol signal
2.	Input	Same transmitter shall be capable to handle Pt-100 RTD, Thermocouples –K, R & ,S types (Selectable through HART terminal/calibrator)
	Isolation	Min 500 VAC
	EMC compatibility	As per EN 61326
	Power supply	24 V C +/- 10%
3.	Housing	Weather proof as per IP-67, metallic housing with durable corrosion resistant coating
4.	Electrical connection	Plug and Socket connector except hazardous area
5.	Diagnostics & display	Self-Indicating feature and digital display on transmitter
6.	Operating Ambient temperature	85 deg C without display. 70 deg C with display.
7.	Mounting	2 inch pipe mounting with Canopy.
8.	Accessories	As required by service and operating condition.
9.	Composite Accuracy	(Refer note 2) RTD =<0.25% of 0-250 deg C span

T/C-K type =<0.2% of 0-600 deg C span

CJC accuracy (for thermocouples) shall be =< 1 deg C

Notes:

1.In case of failure (open or burn-out) of RTD/thermocouple, transmitter shall provide low temperature output.

2. Dual input temperature transmitter shall have bump less changeover facility to second sensor in case first sensor fails. This changeover is to be alarmed in control system.

3. Composite accuracy is to be calculated as summation of all applicable accuracies of temperature transmitter for converting sensor input to output (e.g., A/D accuracy, basic accuracy, digital accuracy, etc.) and temperature effect on these accuracies at ambient temperature of 50 deg C, based on the figure/ formula given in the standard product catalogue for span as specified above for various types of temperature elements specified. All such accuracy/ temperature effect figures in catalogue shall be first converted to deg C, and then percentage of this converted accuracy in specified span shall be calculated to compare with the specified composite accuracy figures. All temperature transmitters shall be interchangeable (i.e. can be used for either RTD or thermocouple) and composite accuracy shall be met for each type of input as specified above.

3. Above mentioned parameters/features of offered models shall be strictly as defined in standard published catalogue of the manufacturer only.

4. Dual input temperature transmitters can also be accepted in place of single input TT.

4.00.00

4.01.00

4.02.00

8.00.00 **E-P Converter**

E-P converters and associated accessories shall be furnished in accordance with the specifications given below :

A. Fail Freeze Type E/P converters

1	Air supply Pressure	:	2 kg/sq. cm.
2	Input signal	:	4-20mA DC
3	Output signal	:	0.2 to 1.0 kg/sq. cm
4	Linearity	:	0.5% of span or better.
5	Span/Zero Adjustment	:	To be provided
6	Hysteresis	:	0.5% of span or better.
7	Fail Freeze Feature	:	Stay put at last position on failure of 4 –20mA signal.
8	Allowable drift rate	:	Maximum 2% set point/ hour.
9	Ambient Temperature Effect	:	less than 0.02% of span per deg C between -
10	Mounting	:	Surface/Pipe/Bracket Mounting.
11	Protection class	:	IP 65.
12	Connection Port Sizes	:	¼ inch NPT (F)
13	Electrical Cable Entry	:	½ inch NPT
14	Output Pressure Gauge	:	1/4 inch NPT connection, 2 inch dial.
15	Accessories	:	All accessories like mounting brackets, fittings etc. required for installation is to be supplied.

B. FaiL Safe type E/P converters

1	Air supply Pressure	:	2 kg/sq. cm.
2	Input signal	:	4-20mA DC
3	Output signal	:	0.2 to 1.0 kg/sq. cm
4	Linearity	:	0.5% of span or better.
5	Span/Zero Adjustment	:	To be provided.
6	Hysteresis	:	0.5% of span or better.
7	Fail Safe Feature	:	Output shall drive to minimum on failure of either 4-20mA signal or air supply.
8	Mounting	:	Surface/Pipe/Bracket Mounting.
9	Ambient Temperature Effect	:	less than 0.02% of span per deg C between -20 to +60 deg C.
10	Protection class	:	IP 65.
11	Connection Port Sizes	:	¼ inch NPT (F)
12	Electrical Cable Entry	:	½ inch NPT
13	Output Pressure Gauge	:	1/4 inch NPT connection, 2 inch dial.
14	Accessories	:	All accessories like mounting brackets, fittings etc. required for installation is to be supplied.

9.00.00 **NOT USED**

10.00.00 **NOT USED** **NOT USED**

11.00.00 **NOT USED**

12.00.00

13.00.00 SPECIFICATION FOR FLOW ELEMENTS

13.01.00 Orifice Plate

Features	Essential/Minimum Requirements
Type	Concentric as per ASME PTC-19.5 (Part-II), ISA RP-3.2, 1960 or BS-1042, ISO 5167
Material	316 SS
Thickness	3 mm for main pipe diameter up to 300 mm and6 mm for main pipe dia above300 mm.
Material of branch pipe	Same as main pipe
Root valve type	Globe
Root valve material	Same as pipe material
Root valve size	1 / 2 inch or 1 inch (as applicable)
Impulse pipe of same material up to root valve	Required
Tappings	Flanged weld neck or D & D/2 with 3 pairs of tapping (as applicable). Root valves to be provided in all the tappings. However for flow elements in CPU, DM & PT plant- 2 Pairs of Tappings shall be provided as minimum.
Beta Ratio	0.34 to 0.7
Beta Ratio calculation to be submitted	Yes
Assembly drg. and flow Vs DP Curves	Yes
Accessories	Root valves, flanges, Vent/drain hole(As required)

Contractor shall submit certified flow calculation and differential pressure vs. flow curves for each element for Employer's approval. Sizing calculation, precise flow calculation for all the flow elements, fabrication and assembly drawings and installation drawings shall be submitted for Employer's approval.

13.02.00 Flow Nozzle

Features	Essential/Minimum Requirements

	Type	Long radius, welded type as per ASME PTC-19.5 (Part-III) or BS-1042
	Material	316 SS
	Thickness	Suitable for intended application.
	Material of branch pipe	Same as main pipe
	Root valve type	Globe
	Root valve material	Same as pipe material
	Root valve size	1 inch
	Impulse pipe of same material up to root valve	Required
	Tapping	Flanged weld neck or D & D/2 with 3 pairs of tapping (as applicable). Root valves to be provided in all the tappings. However for flow elements in CPU, DM & PT plant- 2 Pairs of Tappings shall be provided as minimum.
	Beta Ratio	Around 0.7
	Beta Ratio calculation to be submitted	Yes
	Assembly drg. and flow Vs DP Curves	Yes
	Accessories	Root valves, vent and drain hole.

Contractor shall submit certified flow calculation and differential pressure vs. flow curves for each element for Employer's approval. Sizing calculation, precise flow calculation for all the flow elements, fabrication and assembly drawings and installation drawings shall be submitted for Employer's approval.

13.03.00 **Venturi (For Liquid applications)**

Features	**Essential/Minimum Requirements**
Type	Rough Welded (for Pipe dia between 200mm to 1200mm) or Machined (for Pipe dia 50mm to 250mm) as per ISO 5167-4:2003,
Material	Same as Main Pipe
Thickness	Same as Main Pipe.
Root valve type	Globe Type
Root valve material	Same as Pipe material
Root valve size	1 inch

Impulse pipe of same material up to root valve	Required
Tapping	3 pairs of tappings for each Venturi as per ISO 5167-4:2003, However for some areas like CPU, DM & PT plant- 2 Pairs of Tappings shall be provided as minimum.
Beta Ratio	0.4 to 0.7
Beta Ratio calculation to be Submitted	Yes
Assembly drg. and flow Vs DP Curves	Yes
Accessories	Root valves, vent and drain hole.

Contractor shall submit certified flow calculation and differential pressure vs. Flow curves for each element for employer's approval. Sizing calculation, precise flow calculation for all the flow elements, fabrication and assembly drawings and installation drawings shall be submitted for employer's approval.

13.04.00 **ROTAMETERS**

Sr. No.	Features	Essential / minimum requirements
1.	Type	Variable Area Metal Tube
2.	Fluid media	Water/oil
3.	Tube body	SS316
4.	Material of float	316 SS
5.	Indicator	Linear scale
6.	Accessories	Flange, orifice in case of bypass Rota meter (for line size above 100 mm)
7.	Housing protection class	IP-55
8.	Accuracy	± 2% of measured value.

14.00.00 NOT USED

15.00.00 PROCESS ACTUATED SWITCHES

FEATURES	ESSENTIAL / MINIMUM REQUIREMENTS

	Pressure/ Draft Switches/ DP Switches	Temperature switches	Level switches
Sensing Element	Piston actuated for high pressure and diaphragm or bellows for low pr./ vacuum	Vapor pressure sensing, liquid filled bellow type with SS bulb and capillary (5 m minimum, to suit application)	Capacitance types, float type, conductivity type, RF type, Ultrasonic type as per suitability to the application. .
Material	316 SS	Bulb 316 SS/ capillary 304 SS	316 SS
End connection	½ inch NPT (F)	½ inch NPT (F)	Manufacturer standard
Over range/ proof pressure	150% of maximum operating pr.	-	150% of maximum operating pr.
Repeatability	+/- 0.5% of full range		
No. of contacts	2 No.+2NC. SPDT snap action dry contact		
Rating of contacts	60 V DC, 6 VA (or more if required by DDCMIS)		
Elect. Connection	Plug in socket.		
Set point adjustment	Provided over full range.		
Dead band adjustment	Adjustable/ fixed as per requirement of application.		
Enclosure	Weather and dust proof as per IP-55, metallic housing.		
Accessories	Siphon, snubber, chemical seal, pulsation dampeners as required by process	Thermo well of 316 SS and packing glands	All mounting accessories
Mounting	Suitable for enclosure/ rack mounting or direct mounting	Suitable for rack mounting or direct mounting	-
Power Supply (wherever required)	As per Contractor's Standard practice.		

Notes :-

1) Where the process fluids are corrosive, viscous, solid bearing or slurry type, diaphragm seals shall be provided. Parts below the diaphragm shall be removable for cleaning. The entire volume above the diaphragm shall be completely filled with an inert liquid suitable for the application.

2) Pressure/ Diff pressure switches for very low press/ DP measurements can have sensor material other than SS316 in case of any technical limitation and the offered product is standard product of the manufacture for very low pressure applications.

3) Repeatability can be upto +/-1% of full range in case of switches with diaphragm seals or very low pressure/DP range.

4) The specifications of switches for air conditioning & ventilation system / process can be as per system manufacturer's standards. The manufacturer shall submit the adequate supporting documents for establishing their standard practice.

16.00.00 **NOT USED**

17.00.00 **SOLENOID VALVES**

Solenoid valves shall fulfil the following requirements:

a. Type 2/3/4 way SS 316/Forged Brass (depending on the application subject to Employer's approval during detailed Engg.)

b. Power supply : 24 V DC ± 10%.

c. Plug and socket electrical connection.

d. Insulation : Class 'H'

e. IP Class : IP65

18.00.00

19.00.00 **WATER SYSTEM RELATED SPECIAL INSTRUMENTS (DM PLANT, CPU PLANT, PT PLANT, ETC)**

19.01.00 **ANALYSER INSTRUMENTS:**

For Technical specification of Cation/Specific Conductivity, pH, Sodium, Silica, Turbidity, Total Dissolved Solids (TDS) and Concentration analysers, please refer Specification of Analysers, Part-B, Sub-section IIIC-13, SWAS chapter of this specification. Specification of

concentration analyser shall be similar to Conductivity analyser except range which shall be as per process requirements.

19.02.00 Residual Chlorine Analyser

a An automatic chlorine residual analyser of amperometric type shall be provided alongwith the chlorinating plant for monitoring the residual chlorine content of cooling water. The analyser shall be suitable for accurate residual measurement in open/closed systems. The measurement accuracy shall not be affected by presence of treatment chemicals as chromates, phosphates, de-former highly polluted water, change in temperature etc.

b The analyser shall comply with the following specification requirements, as a minimum

(i)	Indicator	:	Provision of LC display in the panel of analyser.
(ii)	Range	:	0 to 20.0 mg/L (ppm)
(iii)	Accuracy	:	2% or better
(iv)	Sensitivity	:	0.01 mg/1
(v)	Output signal	:	4-20mA DC isolated output,
(vi)	Alarm annunciation	:	High and low alarms to be provided on panel and shall be field adjustable.
(vii)	Calibration	:	Zero and span adjustment facility to be provided. Final calibration adjustments of the analyser to be done at site and duly verified by titration. Temperature compensation range 0 to 50degC.
(x)	Mounting	:	The analyser shall be suitable for field mounting conform to protection class IP-55.
(xii)	Electrodes	:	Platinum/Gold and copper electrodes shall be provided with cell cleaning system.

(c) Circulating water as sample to residual chlorine analyser shall be taken from hot circulating water pipe work before entry to cooling towers. Exact location and layout of sampling arrangement shall be finalised during detailed engg. stage. Bidder shall provide necessary pumping system (with 100% standby) for meeting the analyser requirements, if needed. All the drains shall be terminated up to the nearest plant drainage system.

19.03.00 All the outdoor field instruments such as analysers/transmitters/meters etc. shall be provided with suitable Free standing cabinet(s)/panel/rack so that the equipments are protected against rain/ sunlight etc.

19.04.00

All the mounting hardware and accessories required for erection and commissioning of the same are to be provided by the contractor. Mounting fittings material shall be SS316. All weather canopy is to be provided for electronics/sensor to protect the same from rain/ sunlight etc.

The Type makes and models no. shall be subject to Owner's approval.

19.05.00 **Electronic Flow-Meter**

The electronic flow meter shall include flow sensor and flow indicator cum integrator / totaliser and shall include all required accessories for satisfactory operation. The flow meter shall be based on full bore electromagnetic principle and shall be electronic type of proven design, make and model acceptable to the owner.

The Bidder shall submit all necessary technical literature and details of selection criteria of the instrument offered to substantiate the model selected. The Bidder shall also furnish list of similar installation along with feed back on satisfactory performance of the instruments.

The flow meter shall meet or exceed the following requirement :

(a)	Output	:	4-20 mA DC Isolated output
(b)	Accuracy	:	± 0.5% of calibrated span or better *
(c)	Repeatability	:	± 0.2% of calibrated span or better
(d)	Power Supply	:	240V AC ± 10%, 50 HZ ± 5%/ 24 V DC, to be arranged by the contractor.
(f)	Protection class	:	IP-55
(e)	Flow tube		SS304
(f)	liner		Hard Rubber

The flow meter shall provide local indication for instantaneous flow. It should also be possible to get local display for daily and monthly discharge. The flow meter shall indicate totaliser/ integrator to get the daily and monthly discharge as stated above.

20.00.00

20.01.00

20.02.00

21.00.00 **Limit switches**

For offsite plant (except PT, DM, Chlorination, chemical treatment, Liquid effluent treatment) application Limit switches shall be silver plated with high conductivity and non corrosive type. Contact rating shall be sufficient to meet the requirement of DDCMIS subject to a minimum of 60 V, 6 VA rating. Protection class shall be IP 55.

For main plant application limit switches are to be provided as per contractor standard and proven practice.

For PT, DM, Chlorination system , chemical treatment, Liquid effluent treatment plant , limit switches of manual valves and solenoid operated on-off valves shall be of inductive proximity type and shall be mounted inside the enclosure: pl. refer the minimum specification requirement below .

Operating voltage Range	10-40 V DC
Sensing system	Inductive Proximity type , 2 Wire
Sensor Contact Type	NO
Reverse polarity and short circuit protection	Yes
IP Class-Sensor	IP67
IP Class-Enclosure(Switch box)	IP67
Cable entry-Enclosure(Switch box)	2no-1/2" NPT
Casing material-Sensor	Brass /SS
Enclosure(Switch box) Housing material	FRP or SS
Operating Ambient temp(sensors)	-5 to 70 deg C
Max allowed Voltage Drop across sensor	5 V
Standard applicable	EN 60947-5-2 or equivalent.

22.00.00 SPECIFICATIONS OF EFFLUENT QUALITY MONITORING SYSTEM (EQMS)

22.01.00 COMMON REQUIREMENTS FOR ALL ANALYSERS

Sno	Features	Minimum Requirement
1.	Output signals	Analog 4-20 mA DC galvanically isolated.
2.	Zero & span Adjustment	To be provided with range selection facility
3.	Ambient temp	50 degC
4.	Sample Temperature	40 degC
5.	Indication	Digital Alphanumeric Display of reading in engineering units shall be provided.
6.	Type of Electronics	Microprocessor based with self-diagnostic
7.	Others	All interconnection tubing and cabling between sensor and analyzer / analyzer panel etc to be provided. All chemical reagents required for EQMS analyzers for entire AMC period is to be supplied in phased manner depending on shelf life.
8.	Location of the Temp & flow measurement	Effluent Treatment plant outlet (Exact location to be decided by contractor in consultation with site)
9.	Location of the Analyser cabinet/enclosure	
10.	Accessories	All the accessories required for mounting the sensor/analyser are to be provided
11.	Digital Signal Transmission	Each analyser shall have a provision for bidirectional soft connectivity over Modbus/RS232/RS485 with employer's central cloud server in addition to 4-20 mA connectivity to DDCMIS.
12.	Compliance to standards	Latest regulatory requirements of CPCB/SPCB/other regulatory/statutory body prevailing at the time of award of the contract.

22.02.00 CONDUCTIVITY ANALYSER

Type	Continuous flow through type
Measuring Range	0 – 60000 µS/cm for sea water application 0-5000 µS/cm for other application
Response Time	<= 5 sec (90% of full scale)
Temperature Compensation	Automatic
Power	To be arranged by the contractor
Accuracy	<= +/- 1 %

22.03.00 **pH ANALYSER**

Type	Cell flow through sample
Measuring Range	0-14 units of pH
Temperature Compensation	Automatic
Power	To be arranged by the contractor.
Accuracy	<= +/- 1 %

22.04.00

22.05.00

22.06.00

22.07.00	**ENCLOSURE/CABINETS / PANELS FOR EQMS AND ANALYSERS OF PT, LET, CHLORINATION, DM/RO, CWT AND CPU PLANT** The enclosure shall accommodate all EQMS Analyzers. The enclosure of all analyzers shall provide protection from dust, humidity, precipitations, sunlight and environmental pollution. The material for the enclosure shall be of steel plate (SS304) with minimum 2 mm thick frame and minimum 2 mm thick steel (SS-304) sheet of protection IP 65 or better with safety lock of good quality. The lighting provision in the cabinet is to be provided. The cabinets shall be designed such that the wet section and dry section are separate, the exact details shall be finalized during detailed engineering. The panel shall be free standing type constructed of suitable 3 mm thick channel frame of SS and shall be provided with a canopy to protect the equipment mounted in racks from falling objects, water etc. The canopy shall not be less than 3 mm thick steel, and extended beyond the ends of the rack. In order to ensure the healthy operation of the installed electronic modules, cards, analyzers, etc inside the enclosure during continuous operation, the EQMS enclosure shall be provided with Air conditioner unit .
23.00.00	NOT USED
24.00.00	**DEPOSIT MONITOR**

Sno	Feature	Details	
1	Standard	AS per NACE standard RP0189-2002	
2	Type	Online, Annular flow , scale deposition	
3	Measurement	Deposit weight and average weight per unit surface area	
4	Observation	1. Online-Visual 2. Offline- Quantitative by weighing heat transfer surface	
5	Accessories:-		Qty
	(i) Flow Switch		1 Nos
	(ii) Flow meter (Rota meter)		1 Nos
	(iii) Manual Flow Control valve		1 Nos
	(iv) Skin temperature Sensor		2 Nos
	(v) Temperature Controller		1 Nos
	(vi) Digital Temperature Indicator		2 channel
	(vii) Electric heater(Electrical resistance heating element)		2 Nos
6	Power Supply	230VAc	
7	Electric heater protection	(a). No water Flow (b).Outlet temperature more than set point.	

25.00.00

26.00.00

28.00.00 **ORP/PH PORTABLE METER**

Sensor Probe Specification Requirement

S.no .	Feature	pH	ORP
b)	Electrode	: Glass	: Platinum
c)	Accuracy	:< ± 1% of reading	: < ± 1mv
d)	Range	: 0-14 pH	: -1400mv to +1400mv
e)	Temperature Compensation	Automatic	

Portable meter

S.no.	Feature	Details
1.	Type of electronics	Microprocessor based
2.	Measurement	Ph & ORP
3.	Ambient temp.	50°C
4.	Display	LCD
5.	Enclosure Type / Material	IP 67
6.	Power source	Batteries
7.	Battery life	>=200 hrs

2.13.00	
2.14.00	
2.15.00	
3.00.00	**SPECIFICATION OF ANALYSERS**
3.01.00	Field proven reputed international make microprocessor based monitors/analyzers with LCD display and with necessary fault diagnostic features shall be employed. All analysers shall provide 4-20mA output signal capable of driving a load impedance of 500Ohms minimum. The type, size, capacity, material, make, model and other specification details of the rest of the SWAS system like coolers, gauges/switches, sample pipes, filter, pressure reducing elements, grab sampling arrangement, valves & fittings, panels etc. shall be as decided during detailed engineering stage and shall be subject to Employer's approval.

Minimum specifications of analysers						
Requirements	**Conductivity**	**PH**	**Phosphate**	**Chloride**	**Turbidity**	**Degassed Cation Conductivity**
Type	For Hotwell, Two removable Type of Cells, For Others, Continuous Flow Through Type	Cell Flow Through sample	Colorimetric	Continuous Flow Through Type with Chloride & Sulphate Responsive Electrodes	Light reflection principle	Continuous Flow Through Type for continuous measurement of Specific conductivity, cation conductivity and degassed conductivity values
Accuracy	≤ ± 1%	≤ ± 1%	≤ ± 5% of reading	≤ ± 5%	≤ 2% for range 0-50 NTU, ≤ 5% for range 50 – 200 NTU	≤ ± 1% of Reading
Response Time (90 % of Full Scale)	≤ 5 sec.		≤ 16 min.		≤ 5 min.	≤ 5 sec.
Range	0-1, 0-10, 0-100 micro-mho/cm (freely programmable) for Specific Conductivity . 0-1 micro-mho/cm log scale for Cation conductivity	6-11 pH freely programmable	0-10 ppm freely programmable	0-1000 ppb freely programmable	0 – 100, 0-200 MTU, programmable	0-1, 0-10, 0-100 , 0-1000 µS/cm,(freely programmable)
Temperature Compensation	Automatic/	Automatic	Automatic	Automatic		Automatic
Sample Flow			50-150 ml/min			200ml/min (max)
No. of Streams	Single	Single	Single	Single	Single	Single
Analog output	4-20 mA output to DDCMIS	4-20 mA output to DDCMIS	4-20 mA output to DDCMIS	4-20 mA output to DDCMIS		Separate 4-20mA outputs for transmitting Specific conductivity, Cation conductivity and Degassed Cation Conductivity values to DDCMIS.

Minimum specifications of analysers .....continued

Requirements	Hydrazine	Silica	Sodium	Dissolved O2	Total Iron (Fe)
Type	Automatic Continuous Electrochemical Type	Continuous Colorimetric Type	Continuous Flow Through sample	Continuous Flow Through sample	Continuous Flow Through sample
Accuracy	≤ ± 5%	≤ ± 5% of reading	≤ ± 10% of reading	≤ ± 5% of reading	<±5 % of reading or ±0.005 ppm
Response Time (90 % of Full Scale)	≤ 3 min.	≤ 15 min. (including sample switching)	≤ 4 min.	≤ 30 sec.	≤ 15 min. (including sample switching)
Stability	Calibration Once in a Month		Calibration Once in a Month		
Range	0-50, 0-100 ppb freely programmable	0-50, 0-100 ,0-500 ppb freely programmable	0-1,0-10, 0-200 ppb freely programm-able	0-20,0-200 ppb freely programmable	0-50ppb, 0-150ppb, 0-300ppb, 0-1ppm, 0-5ppm freely programm-able or as per the process requirement.
No. of Streams	Single	Multi stream with sequencer/ stream selector (min. 4 streams)	Multi stream with sequencer/ stream selector (min. 4 streams)	Single	Multi stream with sequencer/ stream selector (min. 4streams)
Temperature Compensation	Automatic	Automatic	Automatic	Automatic	Automatic
Sample Flow	170 ml/min (max)	50-150 ml/min	125 ml/min (max)	170 ml/min (max)	200ml/min (max)
Analog output	4-20 mA output to DDCMIS	4-20 mA output to DDCMIS	4-20 mA output to DDCMIS	4-20 mA output to DDCMIS	4-20 mA output to DDCMIS
REMARKS	All the analysers/cells shall have open Corrosion resistant drain to waste header.				
	Analysers/ monitors/ cells shall be suitable for operating under the conditions specified.				
	Dual cation exchange column shall be provided for cation conductivity.				

3.02.00 Contractor to provide the open chemistry for all the analyser reagents being supplied under this package. Constitution of chemicals along with percentage of chemicals so that

preparation / formulation can be done and checked at site LAB. Contractor to also provide the procedure for testing of reagents and shelf life of the chemicals.

4.00.00 **SAMPLE PIPING SYSTEM**

4.01.00 This shall include piping, fittings, valves and accessories from tapping point upto SWAS conditioning panel located in SWAS room on as required basis. All sample piping shall be 3/4" NB seamless type of material ASTM A213 TP 316 H, conforming to ANSI B36.19. The schedule number shall be suitable for the particular application.

4.02.00 All fittings shall be socket welding type and of material ASTMA182 F316H conforming to ANSI B 16.11.

4.03.00 Single and multi tubes shall run with the minimum number of changes in direction. Suitable identification tags shall be provided for easy check up and for proper connections.

4.04.00 The valves to be used in sample piping shall be of stainless steel conforming to ASTM A182. The pressure temperature ratings shall be as per ANSI B16.34. The valve design shall be such that the seats can be reconditioned and stem and disc can be replaced without removing valve body from the line. The specification of End size, Pressure class, Type, End preparation, Body, etc. for different type of valves are specified in SWAS table in Clause No. 4.06.00 of Subsection IIIC-09, Section-VI, Part-B.

4.05.00 **Material Specifications for Sample Pipe Lines**

The piping to be furnished and installed for water and steam analysis system shall be as indicated below:

	Piping System	Material
1.	Piping from the sample inlet bulk head fittings to the shut off valves	Stainless steel, ASTM A 213, Type 316H, 16 BWG tubing
2.	Piping for the high pressure samples and sample blow down piping	Stainless steel, ASTM A 213, Type 316 H. 14 BWG tubing
3.	Blow down header	Stainless steel, ASTM A 312, Type 304 Schedule 160
4.	Miscellaneous drains receiver holder	Stainless steel, ASTM A 312, Type 304 Schedule 40
5.	Piping from the shut-off valves to the terminal points including branch piping and the closed cooling water grab sample piping	Stainless steel, ASTM A 213, Type 316 H, 16 BWG tubing
6.	Closed cooling water piping except grab sample and water purge line	Carbon steel, ASTM A 53 Gr. A, Schedule 40.
7.	Sample through drain piping and waste header piping	Carbon steel, ASTM A 53 Gr. A, Schedule 40.
8.	Purge air piping/tubing and filling valves	Brass/Copper

4.06.00 **SWAS Valve Table:**

S. No.	Service / Location	End Size	Pr. Class	Type	End Preparation	Body	Make (as specified or equivalent)
1	Sample Shut off valve	0.38	6000	Globe	SW	316SS	Thiedig
2	Sample blow down valve	0.38	6000	Ball valve	SW	316SS	Thiedig
3	Solenoid valve	--	--	2 way	--	316SS	ASCO
4	Pr. reducing Valve	0.38	--	Needle	Tube	316SS	Thiedig
5	Safety relief Valve	0.25	3000	Relief	Tube	316SS	Nupro
6	PI and FI isolation valve	0.25	3000	Needle	Tube	316SS	Whiety
7	Back pr. regulating valve	0.25	300	C.W.	SCR	316SS	Cono. flow H30XT-HAXXXG
8	Grab	0.25	300	3-way	Tube	316SS	Whiety
9	Quick	--	--	ball	--	316SS	Hancock Walther
10	Individual P.C. and S.C. inlet & outlet valve					316SS	Hancock/ ACKER MANN
11	P.C. I\L & O\L header & chilled water I\L & O\L isolation valve	--	--	Gate	--	316SS	Hancock
12	Safety relief valve at each PC & SC and cooling water header	--	--	Relief	--	316SS	Baldota
13	High Pressure reducing valve	--	--	--	--	316SS	--
14	Isolation valve before primary cooler	--	--	Needle	Tube	316SS	Whiety

5.00.00 **Contract quantities:** Refer Appendix- I to part A, Section VI of technical specifications.

SPECIFICATIONS FOR PR. GAUGE, D.P. GAUGE, TEMP. GAUGE AND LEVEL GAUGE.

Sl. No	FEATURES	ESSENTIAL/MINIMUM REQUIREMENTS		
		Pr. Gauge/ DP Gauge/ Draught gauges	Temperature Gauge	Level Gauge
1	Sensing Element and material	Bourdon for high pressure, Diaphragm/Bellow for low pr. Of 316 SS	Mercury in steel for below 450°C and inert gas actuated for above 450°C of SS bulb and capillary.	Tempered * toughened Borosilicate gauge glass steel armoured reflex or transparent type.
2	Body material	Die-cast aluminium	Die-cast aluminium	Forged carbon steel/304 SS
3	Dial size	150mm	150 mm	Tubular covering entire range
4	End connection	1/2 inch NPT (M)	3/4" NPT (M)	Process connection as per ASME PTC and drain/vent 15 NB
5	Accuracy	±1% of span	± 1% of span	± 2%
6	Scale	Linear, 270° arc graduated in metric units	Linear, 270° arc graduated in °C	Linear vertical
7	Range selection	Cover 125% of max. of scale	Cover 125% of max. of scale	Cover 125% of max. of scale
8	Over range test	Test pr. for the assembly shall be1.5 to the max. Design pr. at 38°C.		
9	Housing	Weather and dust proof as per IP-55	Weather and dust proof as per IP-55	CS/304 SS leak proof
10	Zero/span adjustment	Provided	Provided	--
11	Identification	Engraved with service legend or laminated phenolic name plate		

12	Accessories	Blow out disc, siphon, snubber, pulsation dampener, chemical seal (if required by process) gauge isolation valve	SS Thermowell	Gasket for all KEL-F shield for transparent type vent and drain valves of Steel/SS as per CS/Alloy process Requirement.
13	Material of Bourdon/ movement	316 SS / 304 SS	316 SS / 304 SS	

Notes:-

*Bicolour type level gauges will be provided for applications involving steam and water except for condensate and feed water services.

Length of gauge glass shall not be more than 1400 mm. If the vessel is higher, multiple gauge glasses with 50 mm overlapping shall be provided.

Where the process fluids are corrosive, viscous, solid bearing or slurry type, diaphragm seals shall be provided. Parts below the diaphragm shall be removable for cleaning. The entire volume above the diaphragm shall be completely filled with an inert liquid suitable for the application.

CONTROL VALVES, ACTUATORS & ACCESSORIES

1.00.00	**CONTROL VALVES, ACTUATORS & ACCESSORIES**
1.01.00	**General Requirements**
1.01.01	The control valves and accessories equipment furnished by the Bidder shall be designed, constructed and tested in accordance with the latest applicable requirements of code for pressure piping ANSI B 31.1, the ASME Boiler & pressure vessel code, Indian Boiler Regulation (IBR), ISA, and other standards specified elsewhere as well as in accordance with all applicable requirements of the "Federal Occupational Safety and Health Standards, USA" or acceptable equal standards. All the Control Valves, their actuators and accessories to be furnished under this Sub-section will be fully suitable and compatible with the modulating loops covered under the Specification.
1.01.02	All the control valves and accessories offered by the Bidder shall be from reputed, experienced manufacturers of specified type and range of valves.
1.01.03	For special type of control valves such as combined pressure and temperature control valves for Aux PRDS application, separator drain control valves, refer to the corresponding mechanical sections.
1.01.04	Specification for control valves in this Sub-section has to be read in conjunction with other relevant Sub-sections of this specification.
1.02.00	**CONTROL VALVE SIZING & CONSTRUCTION**
1.02.01	The design of all valve bodies shall meet the specification requirements and shall conform to the requirements of ANSI (USA) for dimensions, material thickness and material specification for their respective pressure classes.
1.02.02	The valve sizing shall be suitable for obtaining maximum flow conditions with valve opening at approximately 80% of total valve stem travel and minimum flow conditions with valve stem travel not less than 10% of total valve stem travel. All the valves shall be capable of handling at least 120% of the required maximum flow. Further, the valve stem travel range from minimum flow condition to maximum flow condition shall not be less than 50% of the total valve stem travel. The sizing shall be in accordance with the latest edition of ISA handbook on control valves. While deciding the size of valves, Bidder shall ensure that valves outlet velocity as defined in ISA handbook does not exceed 8 m/sec for liquid services, 150 m/sec. for steam services and 50% of sonic velocity for flashing services. Bidder shall furnish the sizing calculations clearly indicating the outlet velocity achieved with the valve size selected by him as well as noise calculations, which will be subject to Employer's approval during detailed engineering.
1.02.03	Control valves for steam and water applications shall be designed to prevent cavitation, wire drawing, flashing on the downstream side of valve and down stream piping. Thus for cavitation/flashing service, only valve with anti cavitation trim shall be provided. Detailed calculations to establish whether cavitation will occur or not for any given application shall be furnished.
1.02.04	Control valves for application such as HP/LP heater Emergency level control, Emergency Make-up to condenser hotwell, GSC minimum flow, Deaerator Drain to Condenser Hotwell, Condensate spill to condensate reserve tank, condenser normal make-up and valve gland sealing supplying pressure control, CEPS minimum flow control, BFP circulation control valve shall have permissible leakage rate as per leakage Class V. All other control valves shall have leakage rate as per leakage Class-IV as per ANSI / FCI /70.2,2006 or equivalent.
1.02.05	The control valve induced noise shall be limited to 85 dBA at 1 meter from the valve surface under actual operating conditions. The noise abatement shall be achieved by valve body and

trim design and not by use of silencers except for few cases as per contractor's standard and proven practice subject to employer's approval.

1.02.06 Control valves for steam and water application shall be provided with rangability of 30:1 for all services except for applications wherein control valves are envisaged to be operated in lower range like Reheater spray and superheater spray system wherein control valve with rangability of 50:1 shall be provided

2.00.00 VALVE CONSTRUCTION

2.01.00 All valves shall be of globe body design & straightaway pattern with single or double port, unless other wise specified or recommended by the manufacturer to be of angle body type. Rotary valve may alternatively be offered when pressure and pressure drops permit.

2.02.00 Valves with high lift cage guided plugs & quick-change trims shall be supplied.

2.03.00 Cast Iron valves are not acceptable.

2.04.00 Bonnet joints for all control valves shall be of the flanged and bolted type or other construction acceptable to the Employer. Bonnet joints of the internal threaded or union type will not be acceptable.

2.05.00 Plug shall be of one-piece construction cast, forged or machined from solid bar stock. Plug shall be screwed and pinned to valve stems or shall be integral with the valve stems.

2.06.00 All valves connected to vacuum on down stream side shall be provided with packing suitable for vacuum applications (e.g. double vee type chevron packing)

2.07.00 Valve characteristic shall match with the process characteristics.

2.08.00 Extension bonnets shall be provided when the maximum temperature of flowing fluid is greater than 280 deg. C.

2.09.00 Flanged valves shall be rated at no less then ANSI press class of 300 lbs.

3.00.00 VALVE MATERIALS

Sr. No.	Service	Body material	Trim Material
1	Non-corrosive, non-flashing and non-cavitation service except DM water	Carbon steel ASTM-A216 Gr. WCB for design fluid temperature below 275 Deg. C Alloy steel ASTM-A217Gr. WC6 for design fluid temperature above 275 Deg. C and upto 400 Deg. C Alloy steel ASTM-A217Gr. WC9 for design fluid temperature above 400 Deg. C	316SS stellited with stellited faced guide posts and bushings.
2.	Severe flashing/cavitation services	Alloy steel ASTM-A217 Gr. WC9	440 C
3.	Low flashing/cavitation service	Alloy steel ASTM-A217 Gr. WC6	17-4 PH SS
4.	DM water	316 SS	316 SS

service

NOTE: (a) Valve body rating shall meet the process pressure and temperature requirement as per ANSI B16.34.

(b) Severe flashing / cavitation services includes as a minimum all control valves whose downstream piping is connected to condenser or flash tank.

However, Bidder may offer valves with body and trim materials better than specified materials and in such cases Bidder shall furnish the comparison of properties including cavitation resistance, hardness, tensile strength, strain energy, corrosion resistance and erosion resistance etc. of the offered material vis-a-vis the specified material for Employer's consideration and approval.

Contractor shall ensure that all required measures like proper selection of anti-corrosive/erosive material along with durable epoxy coating with polyurethane finish shall be provided for all the C&I equipment/ devices being supplied in this contract, which are mounted in non-AC areas (prone to sea water environment corrosion / erosion) like measuring instruments, control valves & actuators, JBs, LIEs / LIRs, impulse pipes, sample pipes, fittings, conduits, cable trays and accessories, local control panels, erection hardware items etc. Contractor shall furnish their comprehensive proposal regarding the anti-corrosion/ erosion measures for protection against sea water environment which shall be finalized during detailed engineering subject to Employer's approval.

4.00.00 END PREPARATION

Valve body ends shall be either butt welded/socket welded, flanged (Rubber lined for condensate service) or screwed as finalized during detailed engineering and as per Employer's approval. The welded ends wherever required shall be butt welded type as per ANSI B 16.25 for control valves of sizes 65 mm and above. For valves size 50 mm and below welded ends shall be socket welded as per ANSI B 16.11. Flanged ends wherever required shall be of ANSI pressure-temperature class equal to or greater than that of the control valve body.

5.00.00 VALVE ACTUATORS

All control valves shall be furnished with pneumatic actuators. The Bidder shall be responsible for proper selection and sizing of valve actuators in accordance with the pressure drop and maximum shut off pressure and leakage class requirements. The valve actuators shall be capable of operating at 60 deg.C continuously.

Valve actuators and stems shall be adequate to handle the unbalanced forces occurring under the specified flow conditions or the maximum differential pressure specified. An adequate allowance for stem force, at least 0.15 Kg/sq.cm. per linear millimeter of seating surface, shall be provided in the selection of the actuator to ensure tight seating unless otherwise specified.

The travel time of the pneumatic actuators shall not exceed 10 seconds.

6.00.00 CONTROL VALVE ACCESSORY DEVICES

6.01.00 All pneumatic actuated control valve accessories such as air locks, hand wheels/hand-jacks, limit switches, microprocessor based electronic Positioner, diffusers, external volume chambers, position transmitters (capacitance or resistance type only), reversible pilot for Positioner, tubing and air sets, solenoid valves and junction boxes etc. shall be provided as per the requirements.

7.00.00 **SPECIFICATIONS FOR MICROPROCESSOR BASED ELECTRONIC POSITIONER**

1	Electrical	a) Input Demand Signal	(i) 4-20mA for conventional positioners. (ii) Demand signal would be received through fieldbus network for fieldbus based positioners.
		b) Power Supply	i) Loop powered from the output card of Control System for conventional positioners. (ii) Fieldbus based positioners shall be powered from the fieldbus network.
		c) Protocol	(i) Conventional positioners shall be compatible to HART Protocol (ii) Fieldbus based positioners shall be compatible to Foundation fieldbus/ Profibus depending on the Protocol which is finalized for DDCMIS.
		d. Valve position sensing	(i) Position sensing 4-20 mA output signal to be provided for Control System for conventional positioners. (ii) Valve position feedback shall be available to Control system through fieldbus network for Fieldbus based positioners.
2	Environment	a) Operating temp.	(-)30 To 80 Deg. C
		b) Humidity	0-95 %
		c) Protection class	IP-65 Minimum
3	Software for Configuration and Diagnostics	Software	Software shall meet the requirements for Configuration, Diagnostics, Calibration and Testing of the actuator.
		Diagnostic/Test features	Advanced diagnostic features like Stroke counter or Travel counter, Leakage in actuators, Valve Signature analysis, Step Response test, Valve friction /Jamming detection etc to be provided.
4	Test reports/ Certificates	Factory Valve Signature Tests Reports (Pr Vs Valve travel and Travel Vs I/P signal) are to be provided.	
		Test certificates as per Manufacture Standard/Relevant Standard are to be submitted.	
5	Configuration/ Calibration.	Remote & Local Calibration, Auto & Manual Calibration shall be possible.	

6	Operating Range	Full range/ Split range.	
7	Modes	Valve Action	Direct / Reverse Valve Action
		Flow Characterization	Possible to fit Valve Characteristic Curves- Linear , Equal percentage etc.
8	Fail Safe/Fail Freeze	Fail Safe/Fail Freeze feature is to be provided. (In case the fail freeze feature is not intrinsic to the positioner, Bidder shall achieve the same externally through solenoid valve connected in the pneumatic circuit).	
9	Pneumatic	Air capacity	Sufficient to handle the valves & actuators selected/ Boosters to be supplied, if required.
		Air pressure	To suit the air supply pressure/quality available.
		Process connection	¼" NPT
10	Performance	Characteristic deviation	<=0.5 % of span.
		Ambient temp effect	<=0.01 %/ deg C or better.
10	EMC & CE Compliance	Required to International Standard like EN/IEC.	EN50081-2 & EN50082 or equivalent.
11	Accessories	In-built Operator Panel	Display with push buttons for configuration and display on the positioner itself (Password protected/Hardware lock).
		Hand Held Calibrator	(i) Universal HART Calibrator to be provided for conventional positioners. (for quantity, refer Part-A. Contract quantities of the specification). (ii) Fieldbus compatible calibrator to be provided for fieldbus based positioners. (for quantity, refer Part-A)

		Press Gauge Block	For supply & output pressures, Air Filter Regulator and other accessories shall be provided on as required basis for making system complete.
		Electrical Cable Entry	1/2'"NPT, side or bottom entry to avoid water ingress.
		Valves Mounting Assembly	For Sliding Stem/Rotary/Single acting/Double acting actuators on as required basis

*** Note**:

The HART signals shall be picked up from marshalling terminals of DDCMIS (SG/TG DDCMIS as well as BOP DDCMIS), as applicable. The details of the above mentioned HART management system specification are mentioned in HART system (Annexure IIIC-02C to DDCMIS).

The conventional positioners shall be monitored from this HART management system . The fieldbus based positioners shall be monitored directly through fieldbus based DDCMIS network. To achieve this, Bidder shall provide the necessary software to achieve the functionalities described above under " Software for Configuration and Diagnostics", and this software shall be loaded in the HART management system.

8.00.00 TEST AND EXAMINATION

All valves shall be tested in accordance with the quality assurance programme agreed between the Employer and Contractor, which shall meet the requirements of IBR and other applicable codes mentioned elsewhere in the specifications. The tests shall include but not be limited to the following:

8.01.00 Non Destructive Test as per ANSI B-16.34.

8.02.00 Hydrostatic shell test in accordance with ANSI B 16.34 prior to seat leakage test.

8.03.00 Valve closure test and seat leakage test in accordance with ANSI-B 16.34/ FCI 70.2 standard and as per the leakage class indicated above

8.04.00 Functional Test: The fully assembled valves including actuators control devices and accessories shall be functionally tested to demonstrate times from open to close position.

8.05.00 CV Test: Please refer Cl No. 1.00.00 & 3.00.00 OF Sub-section- IIIC-10 (Type test requirements), Control Valves.

Bidder shall furnish all the control valves under this main plant package as finalized during detailed engineering stage without any price repercussions whatsoever depending on the process requirements. All the control valves provided by the Bidder for this project shall meet the specifications requirements specified herein. Specification for control valves in this Sub-section has to be read in conjunction with other relevant Sub-sections of this specification.

10.02.00

10.02.01

10.02.02

10.02.03

10.03.00

10.03.01

10.03.02

11.00.00 FIELD INSTRUMENTS BASED ON FIELDBUS

The following instruments shall be connected to DDCMIS through fieldbus i.e. FOUNDATION Fieldbus/PROFIBUS PA protocol complying to IEC 61158 directly from transmitter.

11.01.00 Electronic Transmitter for Pressure, Differential Pressure and DP based Flow / Level measurements.

S No.	Features	Essential/Minimum Requirements
1.	Type of Transmitter	FOUNDATION Fieldbus/PROFIBUS PA based output

2	Accuracy	± 0.060 % of calibrated range (minimum) for calibrated range greater than 400 mmwc. +0.065% of calibrated range (minimum) for calibrated range greater than 250 kg/cm2. ± 0.10 % of calibrated range (minimum) for calibrated range less than 400 mmwc.
3.	Stability	0.25 % of calibrated range for 10 years for calibrated range greater than equal to 400 mmwc on standard conditions of manufacturer. 0.2 % of calibrated range for 1 years for calibrated range less than 400 mmwc on standard conditions of manufacturer. 0.15% of calibrated range for 5 years for DPT with static pressure greater than 250 kg/cm2.
4	Turn down	50:1 for greater than or equal to span of 400mmwcl. 20:1 for span below 400mmwcl. 10:1 for span greater than 250 kg/cm2
	(Above mentioned (2,3,4) parameters/features of offered models shall be strictly as defined in standard published catalogue of the manufacturer only).	
5	Housing	Weather proof as per IP-67, metallic housing with durable corrosion resistant coating
6.	Electrical connection	½" NPT(F) FOUNDATION Fieldbus/PROFIBUS PA compatible
7.	Process connection	½" NPT (F)
8.	Operating Ambient temperature	85 deg C without display. 70 deg C with display.
	Overpressure	150% of max operating pressure
9	Accessories	-Diaphragm seal, pulsation dampeners, syphon etc. as required by service and operating condition. -2 valve manifold for absolute & gauge pressure transmitters, -3-valve for DP and 5 valve manifold for level/flow applications. -The valve manifold shall be non-integral type. -For hazardous area, enclosure as described in NEC article 5.

10.	Mounting	2 inch pipe mounting with Enclosure/Rack/Canopy.
11.	Diagnostics & display	Self-Indicating feature and digital display on transmitter

Notes

- For primary air/ secondary air/flue gas/ furnace pressure applications, DP type transmitters shall be provided for pressure measurement below 2000 mmwc.
- LVDT type is not acceptable.
- Where the process fluids are corrosive, viscous, solid bearing or slurry type, diaphragm seals shall be provided. Parts below the diaphragm shall be removable for cleaning. The entire volume above the diaphragm shall be completely filled with an inert liquid suitable for the application.

11.02.00 Temperature Transmitter

11.02.01 Single Input /Dual Input Temperature transmitter

Temperature transmitter shall be provided which shall be fully compatible with thermocouples and RTDs being provided by the contractor. Temperature compensation for thermocouples shall be performed in the temperature transmitter itself. Transmitters shall be capable of withstanding ambient temperature up to 85 deg C.

Following specifications are applicable for dual input/single input temperature transmitter.

S No.	Features	Essential/Minimum Requirements
1.	Output	FOUNDATION fieldbus /PROFIBUS PA
2.	Input	Same transmitter shall be capable to handle Pt-100 RTD, Thermocouples –K, R & ,S types
3.	Housing	Weather proof as per IP-67, metallic housing with durable corrosion resistant coating
4.	Electrical connection	½" NPT(F) FOUNDATION Fieldbus/PROFIBUS PA compatible
5.	Diagnostics & display	Self-Indicating feature and digital display on transmitter
6.	Operating Ambient temperature	85 deg C without display. 70 deg C with display.

7.	Mounting	2 inch pipe mounting with Canopy.
8.	Accessories	As required by service and operating condition.
9.	Composite Accuracy	(Refer note 2)
		RTD =<0.25% of 0-250 deg C span
		T/C-K type =<0.2% of 0-600 deg C span
		CJC accuracy (for thermocouples) shall be =< 1 deg C

Notes:

1. In case of failure (open or burn-out) of RTD/thermocouple, transmitter shall provide low temperature output.
2. Dual input temperature transmitter shall have bump less changeover facility to second sensor in case first sensor fails. This changeover is to be alarmed.
3. Composite accuracy is to be calculated as summation of all applicable accuracies of temperature transmitter for converting sensor input to output (e.g., basic accuracy, digital accuracy, etc.) and temperature effect on these accuracies at ambient temperature of 50 deg C, based on the figure/ formula given in the standard product catalogue for span as specified above for various types of temperature elements specified. All such accuracy/ temperature effect figures in catalogue shall be first converted to deg C, and then percentage of this converted accuracy in specified span shall be calculated to compare with the specified composite accuracy figures. All temperature transmitters shall be interchangeable (i.e. can be used for either RTD or thermocouple) and composite accuracy shall be met for each type of input as specified above.
3. Above mentioned parameters/features of offered models shall be strictly as defined in standard published catalogue of the manufacturer only.
4. Dual input temperature transmitters can also be accepted in place of single input TT.

11.02.02

1.00.00	**GENERAL:**
1.01.00	Actuators shall be designed for valve operation to ensure proper function in accordance with specifications given below and complying to EN15714-2 or equivalent. All standards, specifications and codes of practice referred to herein shall be the latest editions including all applicable official amendments and revisions.
1.02.00	This sub-section of specification is applicable for following types of electric actuators:
1.02.01	**Modulating duty electric actuators:** These shall be provided as per standard practice of OEM of equipment, meeting other requirements of specifications. The examples of such applications are Blade pitch actuators of ID/FD/PA Fans, Scoop tube actuator of BFPs etc. For specifications of Blade pitch actuators of ID/FD/PA Fans, refer clause no. 5.00.00 of this chapter.
1.02.02	**Electric actuators for valves/ dampers/ gates (other than covered in 1.02.01):** These actuators shall be Non-Intrusive type electric actuators. The interface of these actuators with DDCMIS shall be of two types viz. with Hardwired interface and with Fieldbus interface. The common requirements of both these type of actuators are specified at clause 2.00.00, specific requirements of Non-Intrusive hardwired actuators are specified at clause 3.00.00 and specific requirements of Non-Intrusive fieldbus actuators are specified at clause 4.00.00. The applications where these two types of actuators are to be provided is specified in Part-A of Technical Specifications.
2.00.00	**COMMON REQUIREMENTS FOR NON INTRUSIVE ELECTRIC ACTUATORS**
2.01.00	**TYPE:**
2.01.01	The actuators shall have integral starters with built in SPP (Single Phasing Preventer). 415 V, 3 phase 3 wire power supply shall be given to the actuator from switch board as applicable through a switch fuse unit. Control voltage of the motor starter shall be 110 V AC / 24 V DC, derived suitably from 415V power supply.
2.01.02	The actuators shall be Non- Intrusive electric actuator. All actuator settings including torque, limit shall be possible without opening the actuator cover and LCD indication shall be available integral to actuator body.
2.02.00	**RATING:** (a) Supply Voltage & frequency: 415V +/- 10%, 3 Phase, 3 Wire & 50HZ +/-5%. (b) Sizing: Open/Close at rated speed against designed differential pressure at 90% of rated voltage. For ON/OFF type: Three successive open-close operations or 15 minutes, whichever is higher. For inching type: 150 starts per hour or required cycles, whichever is higher.
2.03.00	**CONSTRUCTION:** (a) Enclosure: Totally enclosed weatherproof, minimum IP-68 degree of protection. (b) Manual Wheel: Shall disengage automatically during motor operation.

2.04.00 MOTOR:

(a) Type :

Squirrel cage induction motor suitable for Direct On Line (DOL)starting.

(b) Enclosure:

Totally enclosed, self-ventilated.

(c) Insulation

Class F. Temperature rise 70 Deg C. over 50 Deg C ambient.

(d) Bearings:

Double shielded, grease lubricated antifriction.

(e) Earth Terminals:

Two

(f) Protection:

Single Phasing Protection, Over heating protection through Thermostat (as applicable) and wrong phase sequence protection shall be provided over and above other protection features standard to bidder's design. Suitable means shall be provided to diagnose the type of fault locally.

2.05.00 POSITION/TORQUE TRANSMITTER:

The Position/ Limit measurement shall be done using absolute encoders which will give information of position/ limit in both the directions. Electronic measurement of torque shall be provided.

2.06.00 LOCAL OPERATION:

It shall be possible to operate the actuator locally also. Lockable local/remote selection shall be provided on the actuator.

2.07.00 LCD DISPLAY:

A local LCD display shall be provided to give information regarding actuator alarms, status and valve position indications as a minimum in local.

2.08.00 WIRING:

Suitable voltage grade copper wire.

2.09.00 TERMINAL BLOCK:

For power cables, the grade of TBs shall be minimum 650V.

2.10.00 ACCESSORIES:

All required accessories (if applicable) for calibration / settings/ configuration of various parameters of actuator shall be provided. For quantities, please refer Part A of technical specifications.

2.11.00 **SIL CERTIFICATION:**

All actuators shall be certified for SIL 2 or better.

3.00.00 **SPECIFIC REQUREMENTS FOR NON INTRUSIVE HARDWIRED ACTUATORS**

3.01.00 **INTERFACES:**

For ON-OFF and INCHING type actuators interface with the control system shall be through hardwired signal only.

(a) Open/Close command, open/ close status and disturbance monitoring signal (common contact for Overload, Thermostat, control supply failure, L/R selector switch at local & other protections operated) shall be provided hardwired.

(b) The actuator shall be able to accept open/close command at 24V DC with max. 2.5VA load from control system. Accordingly suitable isolated interface in the actuator shall be provided.

(c) Open/close command termination logic shall be suitably built inside actuator.

(d) For typical wiring diagram Refer Tender Drawing No. 0000-999-POI-A-063 (Except plug & socket connector, if not applicable)

3.02.00 **TERMINAL BOX:**

Suitable terminals/ connectors, integral to actuator, for terminating instrumentation & power cables shall be provided. Necessary glands for power cables and instrumentation cables shall be provided.

3.03.00 **TRAINING:**

Contractor shall provide training on Non-Intrusive hardwired Electric Actuator for Employer's personnel. The duration of the training shall be as elaborated in Part-C, Section-VI of technical specifications.

4.00.00 **SPECIFIC REQUIREMENTS FOR NON INTRUSIVE FIELDBUS ACTUATORS**

4.01.00 **INTERFACES:**

For ON-OFF and INCHING type actuators interface with the control system shall be through fieldbus network.

(a) Open/ close commands, open/ close feedback status, disturbance signal etc. shall be available to the Control System through the fieldbus network along with diagnostics. The detailed diagnostics including the actuator operating data shall be available to the DDCMIS through the fieldbus network.

(b) All actuators shall be Foundation Fieldbus/ Profibus compatible. However the exact protocol shall be based on finalized protocol of DDCMIS. If Profibus DP protocol is envisaged then actuator shall have two (redundant) Profibus DP ports for connecting the redundant Profibus DP cables. That is if one profibus cable is cut or not working/ not available, then complete actuator functionality shall be available through the second redundant cable without any manual intervention.

(c) Open/close command termination logic shall be suitably built inside actuator.

4.02.00 **TERMINAL BOX:**

Suitable terminals/ connectors, integral to actuator, for terminating fieldbus cables and power cables shall be provided. Necessary glands for power cables and armored fieldbus cables shall be provided.

4.03.00 **TRAINING:**

Contractor shall provide training on Non-Intrusive Fieldbus Electric Actuator along with detail training on Foundation Fieldbus/ Profibus interface used in actuator for Employer's personnel. The duration of the training shall be as elaborated in Part-C, Section-VI of technical specifications.

5.00.00

18.00.00	**SERVICES DURING DEFECT LIABILITY PERIOD FOR SWAS, ANALYSER INSTRUMENTS of CPU PLANT**
18.00.01	The Contractor shall provide an unlimited warranty on all equipments during the Defect liability period. This warranty shall include repair, replacement, replenishment of consumables (for e.g. reagents, calibration gases etc. as applicable) and

correction of identified discrepancies including Analysers, Sample Handling System, Transmitters, (as applicable) etc. at no cost to Employer.

18.00.02 The Contractor shall provide warranty spares including components for each system based on (and keeping adequate over margin) normally experienced failure rate. Exhaustive list of all such items shall be submitted along with Datasheet for Employer's review and approval during details Engg stage regarding adequacy of the same. The warranty spares as per the list mentioned above will be dispatched by the Contractor along with the main equipment consignment. However for items which have a limited shelf life shall be dispatched in a phased manner during the warranty period. Unused spares/consumables shall be Contractor's property after expiry of warranty period and shall be taken back.

18.01.00 **SERVICES DURING ANNUAL MAINTENANCE CONTRACT (AMC) PERIOD FOR ANALYSER INSTRUMENTS OF CPU PLANT**

18.01.01 The Contractor shall provide complete maintenance services for each System under comprehensive Annual Maintenance Contract (AMC) for period of three years after the Warranty period.

18.01.02 The AMC shall cover total maintenance of all transmitters of Analysers, Sample Handling System,Transmitters etc. coming under the scope of each system and shall include free repair/replacement of each items, replenishment of consumables, correction of problems (if any) and supply of expendable items.

18.01.03 Further, Contractor may note that during the AMC he will be allowed to use Employer's mandatory spares, but has to replenish the same within three months' time or before completion of AMC period whichever is earlier.

18.01.04 The Contractor shall prepare detailed list of faults corrected and parts, expendables utilized during AMC period and shall furnish the same to Employer, properly documented at the end of AMC period. Further, during AMC period the details as required by Employer/ Project Manager shall be made available by Contractor's personnel.

18.01.05 Contractor shall also provide a list of all required AMC spares which shall be finalized along with datasheet during detail engineering stage. These spares will be dispatched by the Contractor at the beginning of AMC on yearly requirement basis. However for items which have a limited shelf life shall be dispatched in a phased manner during the AMC period. Unused spare/consumable shall be Contractor's property after expiry of AMC period and shall be taken back.

18.02.00 **DEPUTATION OF ENGINEER/ TECHNICAL EXPERT FOR ANALYSER INSTRUMENTS OF CPU PLANT**

18.02.01 Contractor shall depute Technical Experts of the OAM /OEM/OES/ (Original Analyser Manufacturer/Original Equipment Manufacturer/Original Equipment supplier) for each of the above system at Site, who will be fully qualified to perform the required

	duties, supervision of maintenance, repair etc. for a period of six month. Employer will intimate the contractor two weeks advance notice for start of deputation period.
18.02.02	After expiry of above six month period, Technical expert for each system shall visit site on monthly basis for monitoring the performance and rectify the problem (if any) for each system for the remaining warranty period and during entire AMC period. In the event of any malfunction/fault/failure in the system or any component thereof contractor shall depute Technical expert of respective system to reach site within 48 hrs of call raised by site during the remaining warranty period and entire AMC period.

	C&I SPECIFICATION FOR CPU SYSTEM	SECTION: C SUB SECTION: C&I

INSTRUMENT STUB DETAILS

PRESS. MEASUREMENT

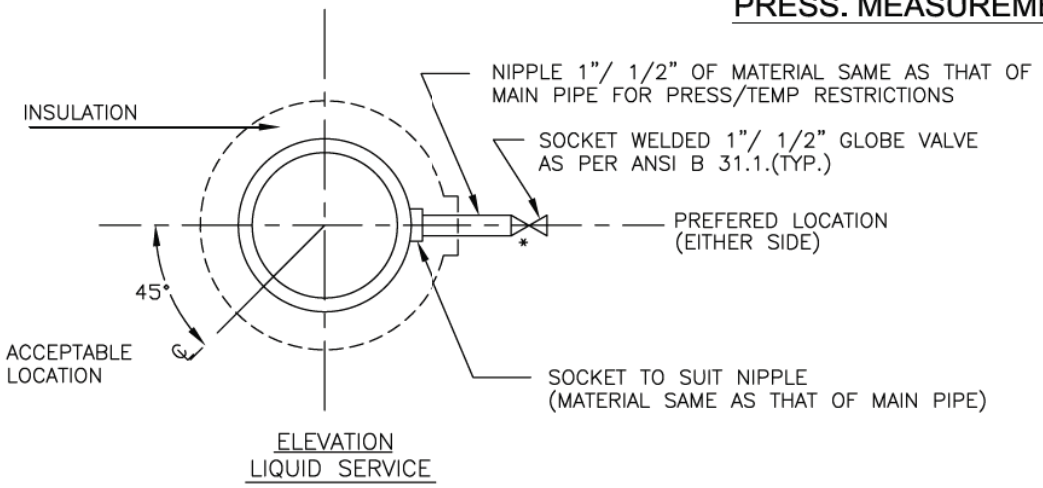

ELEVATION
LIQUID SERVICE

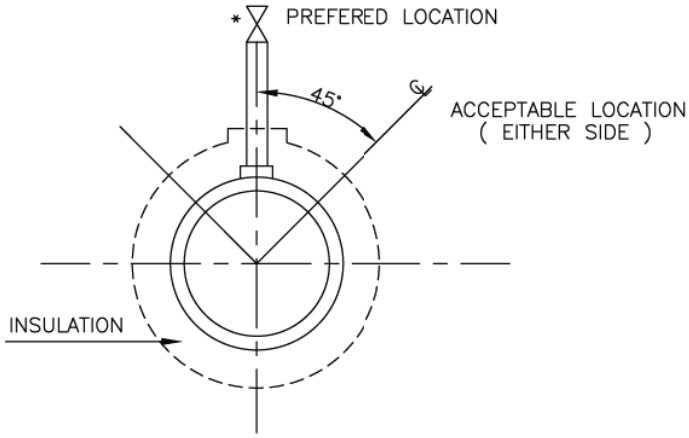

ELEVATION
STEAM SERVICE

PRESSURE CONNECTION ON HORIZONTAL PIPE

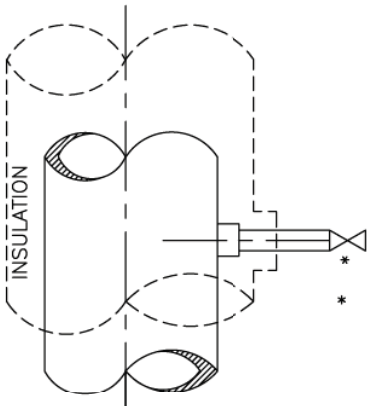

* USE DOUBLE ISOLATION VALVES FOR PRESSURE EQUAL TO OR EXCEEDING 40 Kg/Cm2.

ELEVATION
LIQUID OR STEAM SERVICE

PRESSURE CONNECTIONS ON VERTICAL PIPES

FOR TENDER PURPOSE ONLY

This document is the property of NATIONAL THERMAL POWER CORPORATION LTD.
No part of this document will be reproduced by any means without the written permission.

REV. NO.	DESCRIPTION	DRAWN	DESIGN	CHKD.	M	E	C	C&I	ARCH.	APPD.	DATE
A	FIRST ISSUE							T.G.			21.08.12

CLEARED BY

एन टी पी सी NTPC

N T P C LIMITED
(A GOVERNMENT OF INDIA ENTERPRISE)
ENGINEERING DIVISION

PROJECT: TYPICALTHERMAL POWER PROJECT

TITLE: INSTRUMENT SOURCE CONNECTION DETAILS

SIZE	SCALE	DRG. NO.	REV. NO.
A4	N.T.S.	0000-999-POI-A-035 Sh-1 Of 14	A

PRESSURE MEASUREMENT

(SYSTEM PR.>40Kg/Sq Cm CL 9000)

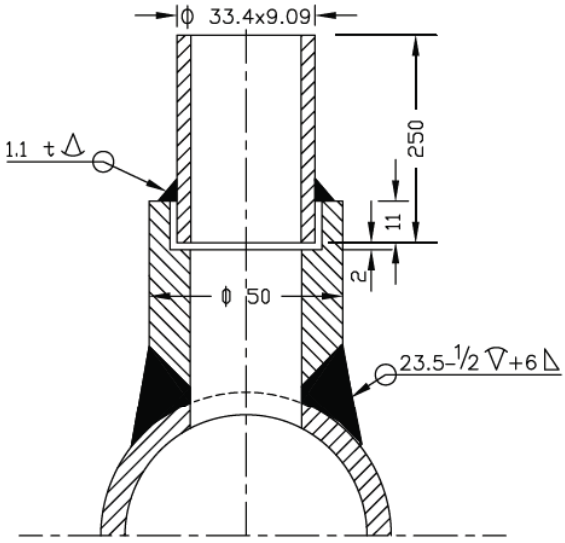

(SYSTEM PR.>40Kg/Sq Cm CL 6000)

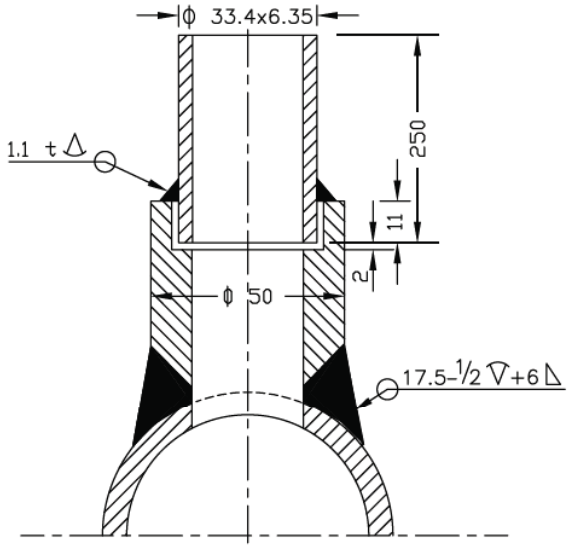

(SYSTEM PR. <40Kg/Sq cm Nb 25 CL 3000)

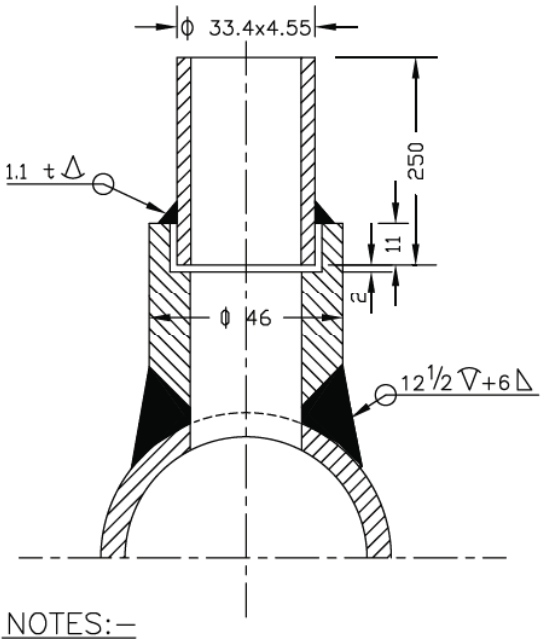

(SYSTEM PR. <40Kg/Sq cm Nb 15 CL 3000)

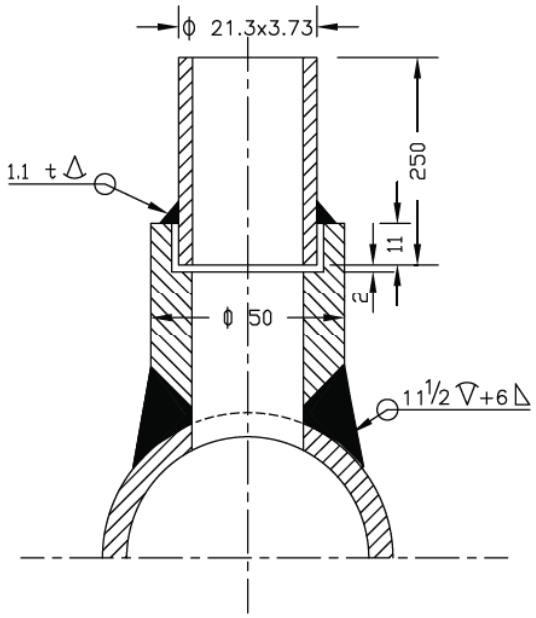

NOTES:–

1. MATERIAL OF THE BOSS AND NIPPLE SHALL BE THE SAME AS THE PIPE INTO WHICH IT IS WELDED AND CONFIRM TO ANSI B 16.11.
2. THE LENGTH OF THE NIPPLE SHOULD BE 250mm.
3. THE OTHER END OF THE NIPPLE SHALL BE SOCKET WELDED WITH 1" GLOBE VALVE OF MATERIAL AS PER ANSI B 16.1.
4. TWO ISOLATED VALVES ARE TO BE USED FOR PRESSURE = >40 Kg/Cm2.
5. EDGE HOLE MUST BE CLEAN AND SQUARE OR ROUNDED SLIGHTLY (1/64" RADIUS) FREE FROM BURRS, WIRE EDGES OR OTHER IRREGULARITIES.
6. ORIENTATION OF TAP WILL BE VARY WITH TYPE OF PROCESS FLUID AND NATURE OF RUN OF THE PIPE.
7. ACTIVITIES TO BE COMPLETED AT THE SHOP, WELD THE COUPLING (OR BOSS) ON THE PIPE AND DRILL PRESSURE CONNECTON HOLE (SAME AS I D OF NIPPLE) IN THE PIPE IN ALLIGNMENT WITH HOLE IN THE COUPLING.
8. ALL DIMENSIONS ARE IN mm UNLESS OTHERWISE STATED.

FOR TENDER PURPOSE ONLY

This document is the property of NATIONAL THERMAL POWER CORPORATION LTD.
No part of this document will be reproduced by any means without the written permission.

REV. NO.	DESCRIPTION	DRAWN	DESIGN	CHKD.	M	E	C	C&I	ARCH.	APPD.	DATE
A	FIRST ISSUE							T.G.			21.08.12
					CLEARED BY						

एन टी पी सी NTPC — **N T P C LIMITED** (A GOVERNMENT OF INDIA ENTERPRISE) ENGINEERING DIVISION

PROJECT: TYPICALTHERMAL POWER PROJECT

TITLE: INSTRUMENT SOURCE CONNECTION DETAILS

SIZE	SCALE	DRG. NO.	REV. NO.
A4	N.T.S.	0000-999-POI-A-035 Sh–2 Of 14	A

This document is the property of NATIONAL THERMAL POWER CORPORATION LTD.
No part of this document will be reproduced by any means without the written permission.

PRESS. MEASUREMENT

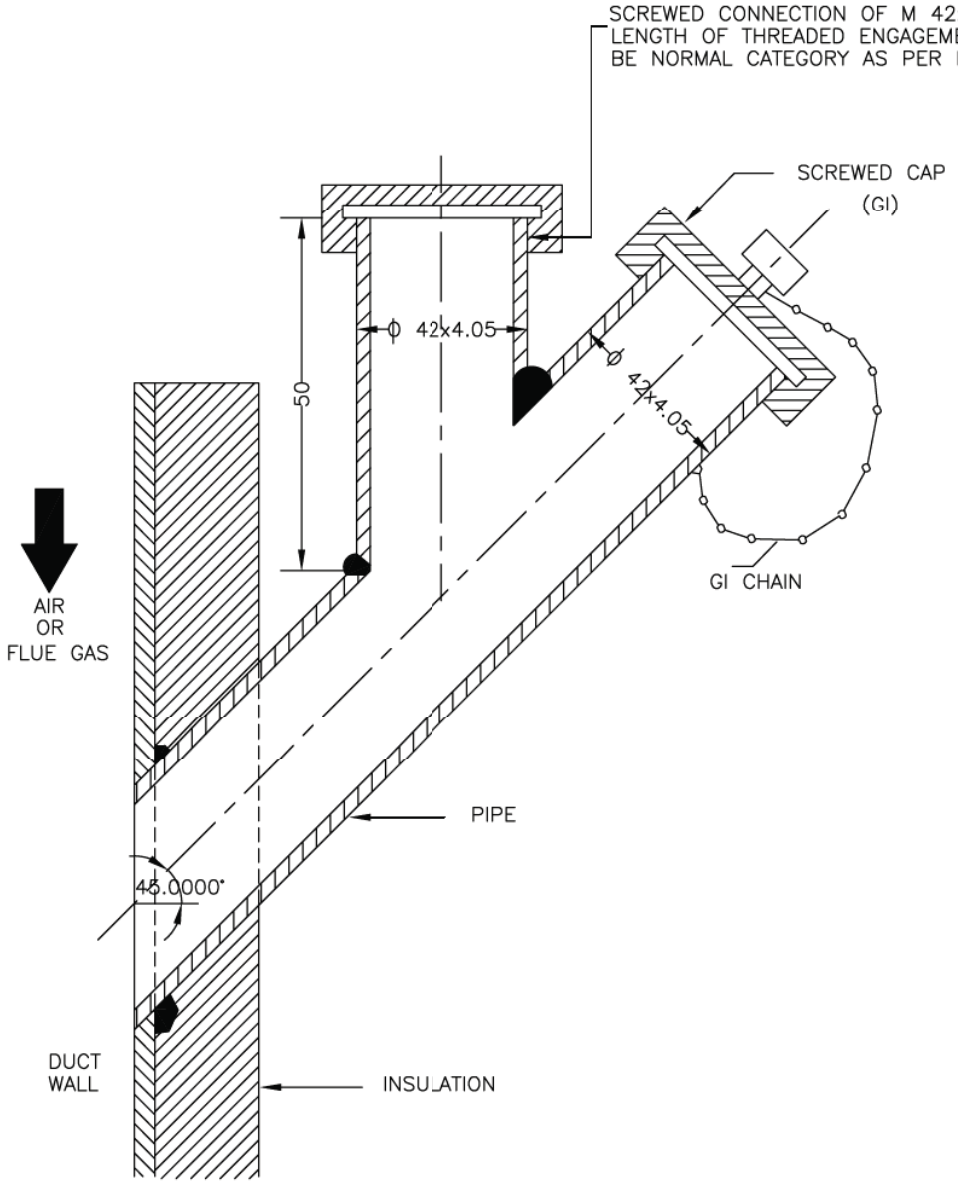

NOTES:–

1. THIS TYPE OF PRESSURE CONNECTON SHALL BE PROVIDED FOR PRESSURE MEASUREMENTS IN AIR AND FLUE GAS DUCT/FURNACE.
2. DIMENSIONS ARE INDICATIVE ONLY.

FOR TENDER PURPOSE ONLY

REV. NO.	DESCRIPTION	DRAWN	DESIGN	CHKD.	M	E	C	C&I	ARCH.	APPD.	DATE
A	FIRST ISSUE							T.G.			21.08.12

CLEARED BY

एन टी पी सी NTPC — **N T P C LIMITED** (A GOVERNMENT OF INDIA ENTERPRISE) ENGINEERING DIVISION

PROJECT: TYPICALTHERMAL POWER PROJECT

TITLE: INSTRUMENT SOURCE CONNECTION DETAILS

SIZE	SCALE	DRG. NO.	REV. NO.
A4	N.T.S.	0000-999-POI-A-035 Sh–3 Of 14	A

TEMP. MEASUREMENT

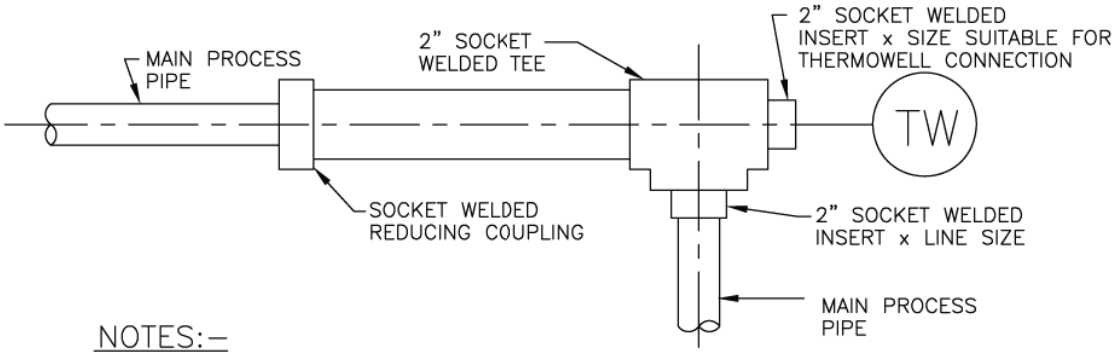

NOTES:–

1. THIS TYPE OF THERMOWELL INSTALLATION IS SUITABLE FOR THE PROCESS PIPE OF 2" NPS AND SMALLER.
2. FOR STEAM SERVICE THIS TYPE OF THERMOWELL INSTALLATION 90° BEND MAY BE USED ONLY IN VERTICAL PLANE.
3. THE LENGTH OF THE LARGER PIPE SECTION SHALL BE MINIMUM 150mm (IT MUST BE GREATER THAN THERMOWELL LENGTH).

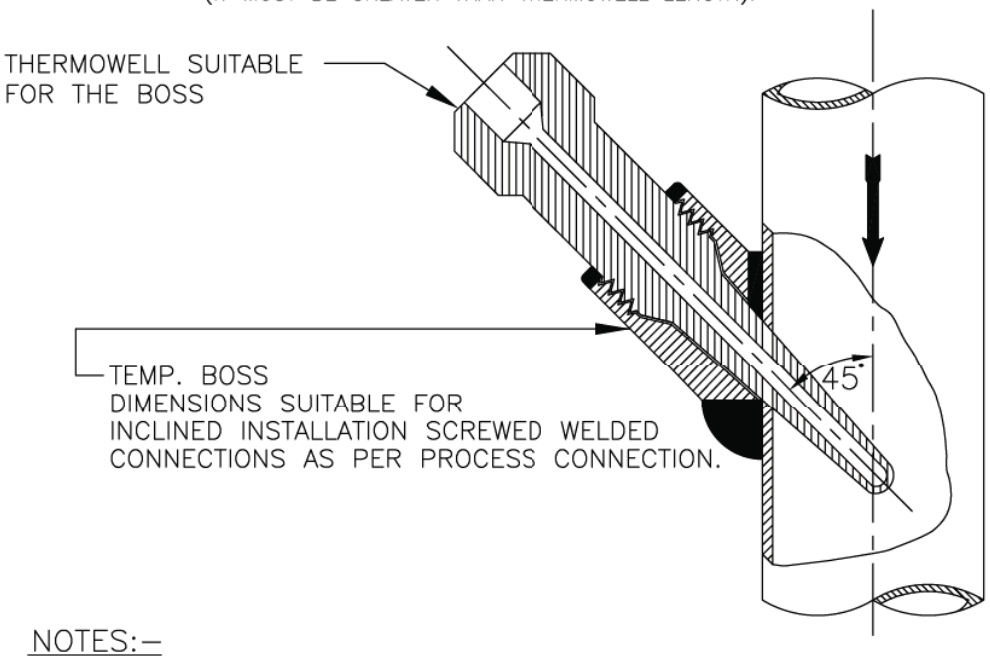

NOTES:–

1. INCLINED INSTALLATION OF THERMOWELL SHALL BE APPLICABLE FOR 4" AND SMALLER LINE SIZE BUT LIMITED TO MIN. 3" LINE SIZE.
2. FOR 2" AND SMALLER LINE SIZE NECESSARY EXPANDER OF MIN. 3" SIZE OF MAIN PIPING SPECIFICATION SHALL BE USED.
3. THIS TYPE OF INSTALLATION IS APPLICABLE FOR HORIZONTAL AND VERTICAL PIPE SECTION.
4. FOR STEAM SERVICES EXPANDER SECTION MAY BE USED ONLY IN VERTICAL RUN.
5. THE EXPANDER SECTION SHALL BE OF ADEQUATE LENGTH (ATLEAST 3–4 TIMES DIA OF THE MAIN PROCESS PIPE AT BOTH SIDE OF THE INSTALLED THERMOWELL).

FOR TENDER PURPOSE ONLY

REV. NO.	DESCRIPTION	DRAWN	DESIGN	CHKD.	M	E	C	T.G. C&I	ARCH.	APPD.	DATE
A	FIRST ISSUE										21.08.12

CLEARED BY

एन टी पी सी NTPC — **N T P C LIMITED** (A GOVERNMENT OF INDIA ENTERPRISE) ENGINEERING DIVISION

PROJECT: TYPICALTHERMAL POWER PROJECT (SG PACKAGE)

TITLE: INSTRUMENT SOURCE CONNECTION DETAILS

SIZE	SCALE	DRG. NO.	REV. NO.
A4	N.T.S.	0000-999/102-POI-A-035 Sh–4 Of 14	A

This document is the property of NATIONAL THERMAL POWER CORPORATION LTD.
No part of this document will be reproduced by any means without the written permission.

TEMP. MEASUREMENT

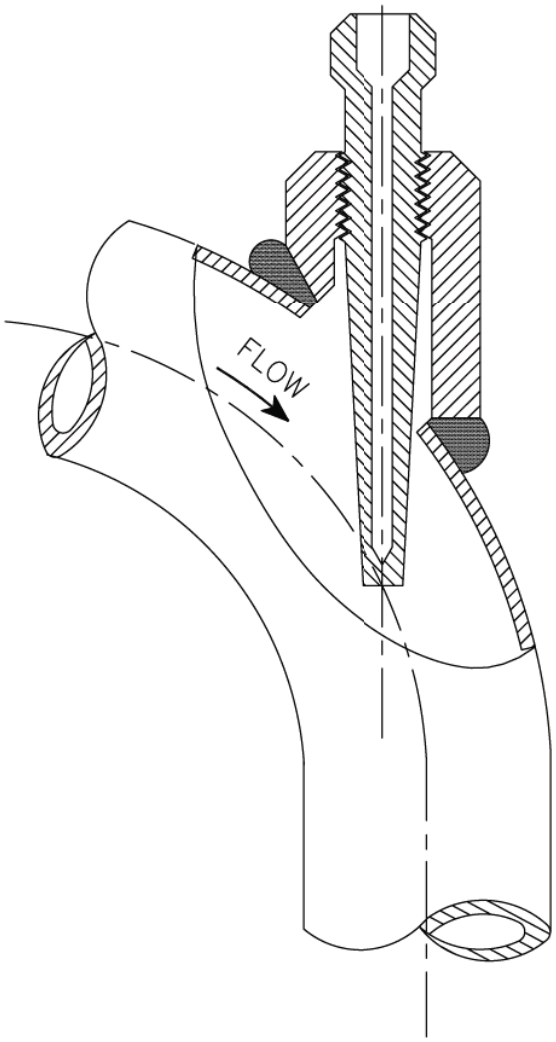

NOTES:–

1. FLOW INSTALLATION OF THERMOWELL SHALL BE APPLICABLE FOR 4" AND SMALLER LINE SIZE BUT LIMITED TO MINIMUM 3" LINE SIZE.

2. FOR 2" AND SMALLER LINE SIZE NECESSARY EXPANDER OF ELBOW FORM (AS SHOWN) OF MINIMUM 3" SIZE SHALL BE USED.

3. ELBOW EXPANDER SECTION IN HORIZONTAL PLANE MAY BE USED FOR LIQUID SERVICES. ONLY STEAM SERVICES EXPANDER SECTION MAY BE USED IN VERTICAL PLAN.

FOR TENDER PURPOSE ONLY

REV. NO.	DESCRIPTION	DRAWN	DESIGN	CHKD.	M	E	C	C&I	ARCH.	APPD.	DATE
A	FIRST ISSUE							T.G.			21.08.12
					CLEARED BY						

एन टी पी सी NTPC **N T P C LIMITED** (A GOVERNMENT OF INDIA ENTERPRISE) ENGINEERING DIVISION

PROJECT: TYPICALTHERMAL POWER PROJECT

TITLE: INSTRUMENT SOURCE CONNECTION DETAILS

SIZE	SCALE	DRG. NO.	REV. NO.
A4	N.T.S.	0000-999-POI-A-035 Sh–5 Of 14	A

This document is the property of NATIONAL THERMAL POWER CORPORATION LTD.
No part of this document will be reproduced by any means without the written permission.

TEMP. MEASUREMENT

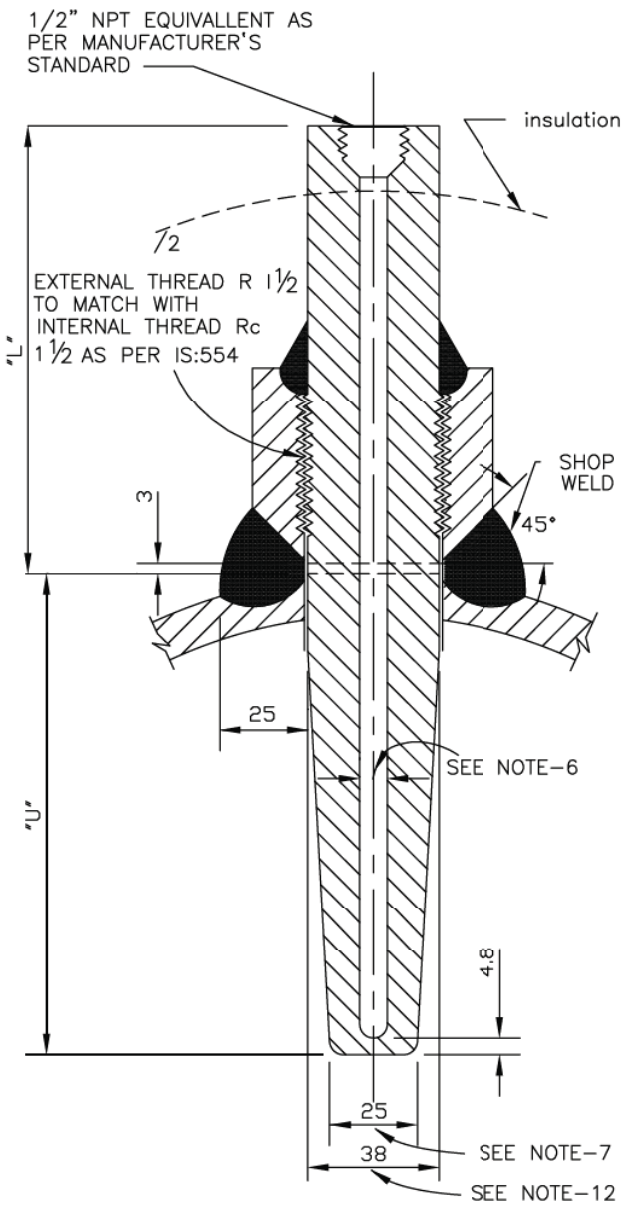

NOTES:-

1. THIS TYPE OF TEMPERATURE BOSS SHALL BE USED FOR THE PROCESS PRESS EQUAL/ABOVE 40 Kg/Cm2(g).
2. THE MATERIAL OF THE BOSS SHOULD BE SIMILAR TO THAT OF PIPING MATERIAL OF SPECIFICATION.
3. ALL WELD TO BE TESTED IN ACCORDANCE WITH APPLICABLE CODES BY MANUFACTURER.
4. MATERIAL OF THE THERMOWELL SHALL BE OF 316SS.
5. THERMOWELL SHALL BE DRILLED BARSTOCK TYPE.
6. INTERNAL BORE OF THE THERMOWELL SHOULD BE SELECTED BASED ON THE NORMAL SIZE OF THE SENSING ELEMENT AS PER ASME,PTC-19.3.
7. THE BOTTOM DIAMETER OF THE THERMOWELL TYPICALLY SHOWN HERE SHALL BE SUBJECT TO VARIATION BASED ON THE INTERNAL BORE OF THERMOWELL AND THICKNESS OF THERMOWELL MATERIAL TO WITHSTAND THE PROCESS PRESS.AND TEMP.,AS PER ASME,PTC-19.3.
8. THE TYPE OF TAPERED THERMOWELL SHALL BE USED FOR LIQUID VELO-CITIES UP TO 92M.P.S.(300F.T.P.S.).
9. THERMOWELL WITH THE INSULATION LAG EXTENSIONS SHALL BE USED WHEREVER APPLICABLE.
10. ACTIVITIES TO BE COMPLETED AT THE SHOP. WELD THE BOSS ON THE PIPE AND DRILL THE HOLE IN THE PIPE IN ALLIGNMENT WITH HOLE IN THE BOSS. PROVIDE INTERNAL THREAD AS PER IS:554 TO MATCH WITH THE THERMO-WELL EXTERNAL THREAD.
11. ALL DIMENSIONS ARE IN MM UNLESS OTHERWISE STATED.
12. WIILL BE SUITABLE TO MATCH THE STUB DIMENSIONS AS PER RC 1½
13. THE "U" & "L" DIMENSIONS SHALL BE BE SELECTED BASED ON PARTICULAR APPLICATION AND THE SAME SHALL BE SUBJECT TO OWNER'S APPROVAL DURING DETAILED ENGINEERING.
14. ALL DIMENSIONS ARE INDICATIVE ONLY.

FOR TENDER PURPOSE ONLY

REV. NO.	DESCRIPTION	DRAWN	DESIGN	CHKD.	M	E	C	T.G. C&I	ARCH.	APPD.	DATE
A	FIRST ISSUE										21.08.12

CLEARED BY

एन टी पी सी NTPC

N T P C LIMITED
(A GOVERNMENT OF INDIA ENTERPRISE)
ENGINEERING DIVISION

PROJECT: TYPICALTHERMAL POWER PROJECT

TITLE: INSTRUMENT SOURCE CONNECTION DETAILS

SIZE	SCALE	DRG. NO.	REV. NO.
A4	N.T.S.	0000-999-POI-A-035 Sh-6 Of 14	A

This document is the property of NATIONAL THERMAL POWER CORPORATION LTD.
No part of this document will be reproduced by any means without the written permission.

TEMP. MEASUREMENT

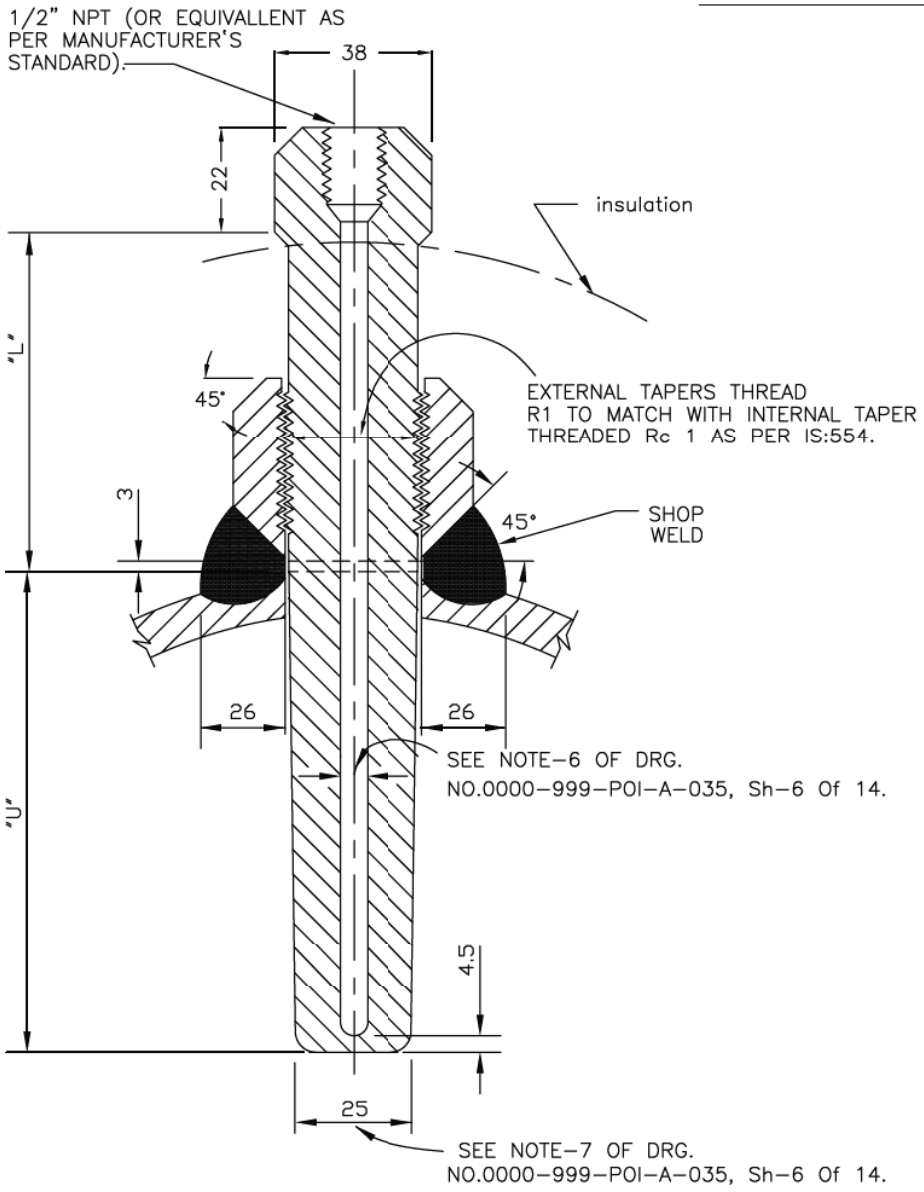

NOTES:–

1. THIS TYPE OF TEMPERATURE BOSS IS APPLICABLE FOR THE PROCESS PRESSURE/TEMPERATURE BELOW 40 Kg/Cm2(g)/400°C
2. FOR PRESSURE TIGHT JOINTS THE BOSS SHOULD HAVE INTERNAL TAPERED PIPE THREAD Rc 1 AS PER IS:554. THE LENGTH OF THREAD ENGAGEMENT SHOULD BE AS PER ABOVE STANDARD.
3. PIPES HAVING PROBABILITY OF PROLONGED VIBRATION SEAL WELDING MAY BE DONE ALL AROUND AFTER TIGHTENING THERMOWELL WITHIN THE BOSS.
4. SEE NOTES–2 TO 14 OF DRG. NO. 0000–999–POI–A–035, Sh–6 Of 14.

FOR TENDER PURPOSE ONLY

REV. NO.	DESCRIPTION	DRAWN	DESIGN	CHKD.	M	E	C	T.G. C&I	ARCH.	APPD.	DATE
A	FIRST ISSUE										21.08.12

CLEARED BY

एन टी पी सी NTPC **N T P C LIMITED** (A GOVERNMENT OF INDIA ENTERPRISE) ENGINEERING DIVISION

PROJECT: TYPICALTHERMAL POWER PROJECT

TITLE: INSTRUMENT SOURCE CONNECTION DETAILS

SIZE	SCALE	DRG. NO.	REV. NO.
A4	N.T.S.	0000-999-POI-A-035 Sh–7 Of 14	A

This document is the property of NATIONAL THERMAL POWER CORPORATION LTD.
No part of this document will be reproduced by any means without the written permission.

TEMP. MEASUREMENT

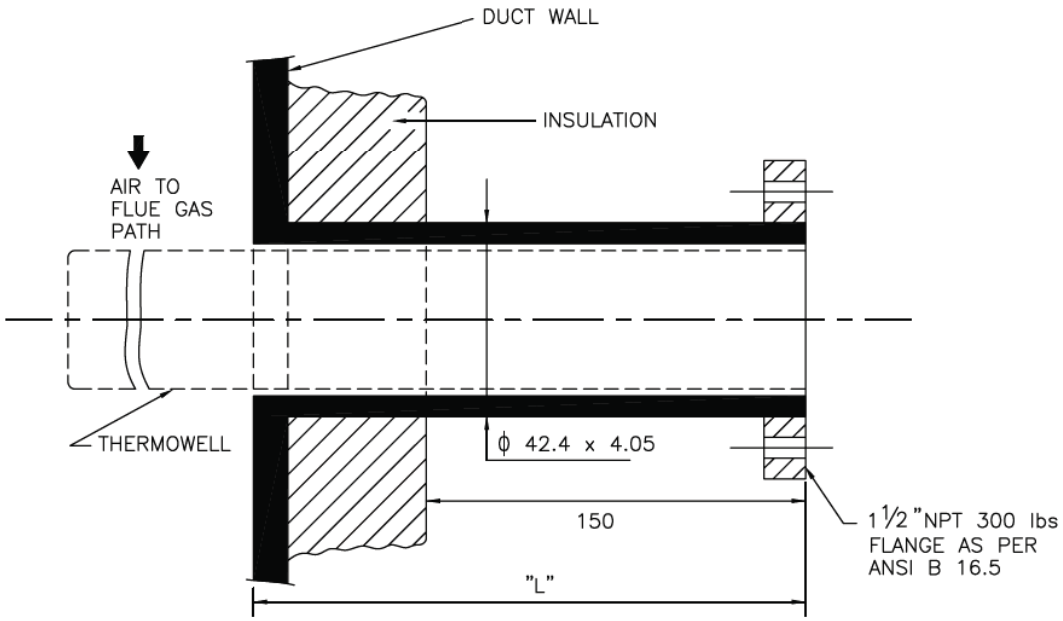

NOTES:–

1. THIS TYPE OF TEMPERATURE CONNECTIONS SHALL BE PROVIDED FOR TEMPERATURE MEASUREMENT IN AIR AND FLUE GAS DUCT.
2. MATERIAL OF THERMOWELL SHALL BE OF 316SS.
3. EXTERNAL CONNECTION SHALL BE OF SLIP ON FLANGED TYPE AND THERMOWELL DESIGN SHALL BE AS PER ASME.PTC–19.3 (REFER NOTES 9&10 OF DRG.NO. 0000–999–POI–A–035, Sh–6 Of 14).
4. BIDDER TO SUPPLY AND INSTALL THE COUNTER FLANGED AND THERMOWELL (ALONG WITH TEMP. ELEMENT).
5. ALL DIMENSIONS ARE INDICATIVE ONLY.

FOR TENDER PURPOSE ONLY

एन टी पी सी NTPC — **N T P C LIMITED** (A GOVERNMENT OF INDIA ENTERPRISE) ENGINEERING DIVISION

REV. NO.	DESCRIPTION	DRAWN	DESIGN	CHKD.	M	E	C	C&I	ARCH.	APPD.	DATE
A	FIRST ISSUE							T.G.			21.08.12
					CLEARED BY						

PROJECT: TYPICALTHERMAL POWER PROJECT

TITLE: INSTRUMENT SOURCE CONNECTION DETAILS

SIZE	SCALE	DRG. NO.	REV. NO.
A4	N.T.S.	0000-999-POI-A-035 Sh–8 Of 14	A

This document is the property of NATIONAL THERMAL POWER CORPORATION LTD.
No part of this document will be reproduced by any means without the written permission.

LEVEL MEASUREMENT

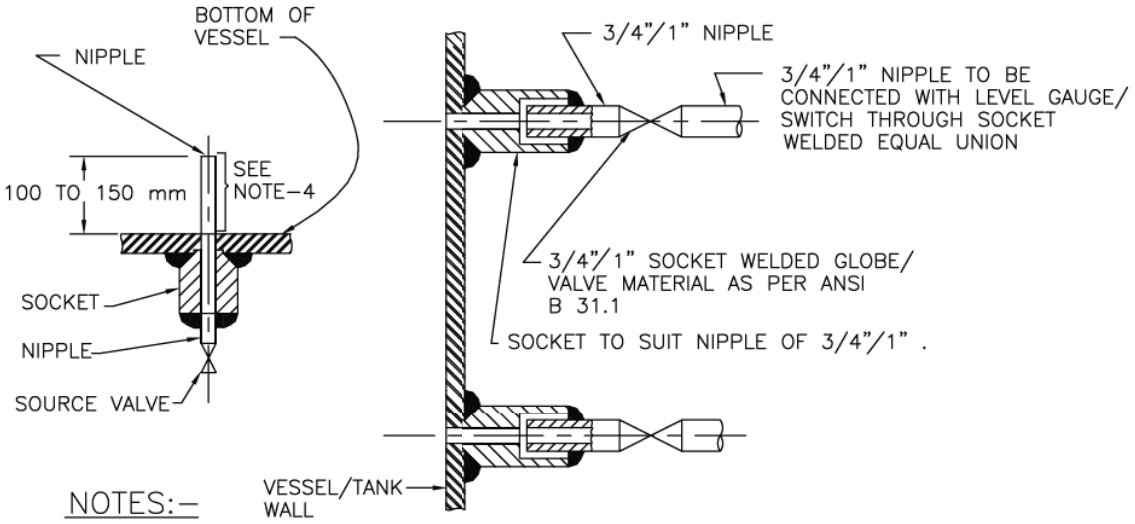

NOTES:-

1. THIS TYPE OF PROCESS CONNECTION SHALL BE USED FOR LEVEL GAUGE AND EXTERNAL CAGE TYPE FLOAT OR DISPLACER OPERATED LEVEL SWITCH.
2. FOR GAUGES 3/4" NIPPLE ALONG WITH 3/4" SW SOURCE VALVE AND FOR SWITCHES 1" NIPPLE ALONG WITH 1" SW SOURCE VALVE SHALL BE PROVIDED AS PROCESS CONNECTION.
3. SOURCE CONNECTION ON VESSEL SHOULD NOT BE LOCATED AT PLACES SUBJECTED TO INTERFACE AND TURBULENCE FROM INLETS AND OUTLETS.
4. IF LOWER CONNECTION IS TAKEN FROM BOTTOM OF THE VESSEL THEN THE NIPPLE MUST BE 100 mm TO 150 mm ABOVE THE BOTTOM OF THE VESSEL.

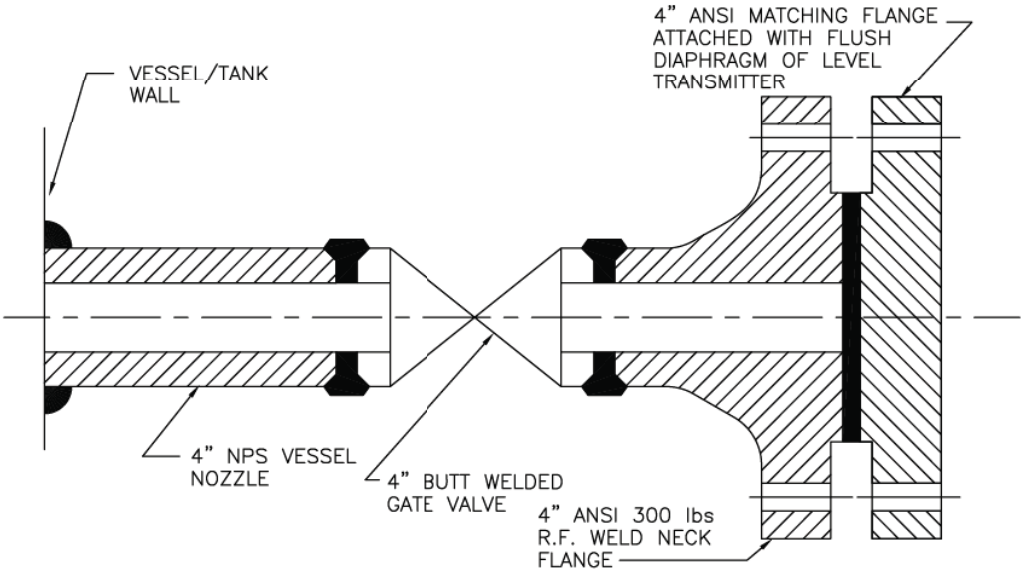

NOTES:-

1. THIS TYPE OF PROCESS CONNECTION SHALL BE PROVIDED FOR TANK LEVEL MEASUREMENT OF VISCOUS OR CORROSIVE LIQUID USING FLUSH DIAPHRAGM/WAFER TYPE LEVEL TRANSMITTER.
2. WELDING OF MATCHING FLANGE TO GATE VALVE SHALL BE DONE BY BIDDER.

FOR TENDER PURPOSE ONLY

REV. NO.	DESCRIPTION	DRAWN	DESIGN	CHKD.	M	E	C	T.G. C&I	ARCH.	APPD.	DATE
A	FIRST ISSUE										21.08.12

CLEARED BY

एन टी पी सी NTPC

N T P C LIMITED
(A GOVERNMENT OF INDIA ENTERPRISE)
ENGINEERING DIVISION

PROJECT: TYPICALTHERMAL POWER PROJECT

TITLE: INSTRUMENT SOURCE CONNECTION DETAILS

SIZE	SCALE	DRG. NO.	REV. NO.
A4	N.T.S.	0000-999-POI-A-035 Sh-13 Of 14	A

This document is the property of NATIONAL THERMAL POWER CORPORATION LTD.
No part of this document will be reproduced by any means without the written permission.

LEVEL MEASUREMENT

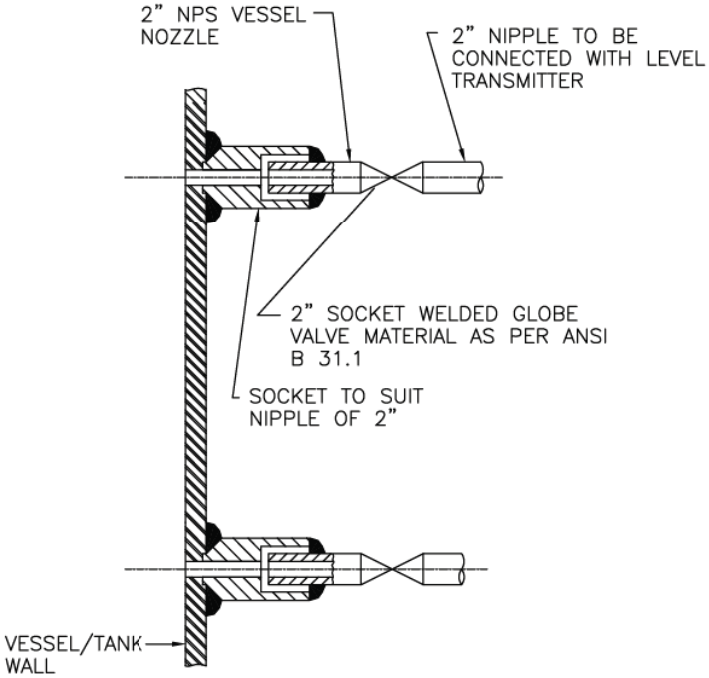

NOTES:–

1. THIS TYPE OF PROCESS CONNECTION SHALL BE USED FOR DISPLACER TYPE LEVEL TRANSMITTER.
2. SOURCE CONNECTION ON VESSEL SHOULD NOT BE LOCATED AT PLACES SUBJECTED TO INTERFACE AND TURBULENCE FROM INLETS AND OUTLETS.
3. IF LOWER CONNECTION IS TAKEN FROM BOTTOM OF THE VESSEL THEN THE NIPPLE MUST BE 100 mm TO 150 mm ABOVE THE BOTTOM OF THE VESSEL.

FOR TENDER PURPOSE ONLY

एन टी पी सी NTPC — **N T P C LIMITED** (A GOVERNMENT OF INDIA ENTERPRISE) ENGINEERING DIVISION

REV. NO.	DESCRIPTION	DRAWN	DESIGN	CHKD.	M	E	C	C&I	ARCH.	APPD.	DATE
A	FIRST ISSUE							T.G.			21.08.12
					CLEARED BY						

PROJECT: TYPICALTHERMAL POWER PROJECT

TITLE: INSTRUMENT SOURCE CONNECTION DETAILS

SIZE	SCALE	DRG. NO.	REV. NO.
A4	N.T.S.	0000-999-POI-A-035 Sh–14 Of 14	A

This document is the property of NATIONAL THERMAL POWER CORPORATION LTD.
No part of this document will be reproduced by any means without the written permission.

	C&I SPECIFICATION FOR CPU SYSTEM	SECTION: C SUB SECTION: C&I

MOTORISED VALVE ACTUATOR SPECIFICATION

1.00.00	**GENERAL:**
1.01.00	Actuators shall be designed for valve operation to ensure proper function in accordance with specifications given below and complying to EN15714-2 or equivalent. All standards, specifications and codes of practice referred to herein shall be the latest editions including all applicable official amendments and revisions.
1.02.00	This sub-section of specification is applicable for following types of electric actuators:
1.02.02	**Electric actuators for valves/ dampers/ gates (other than covered in 1.02.01):** These actuators shall be Non-Intrusive type electric actuators. The interface of these actuators with DDCMIS shall be of two types viz with Fieldbus interface. The common requirements of both these type of actuators are specified at clause 2.00.00, specific requirements of Non-Intrusive hardwired actuators are specified at clause 3.00.00 and specific requirements of Non-Intrusive fieldbus actuators are specified at clause 4.00.00. The applications where these two types of actuators are to be provided is specified in Part-A of Technical Specifications.
2.00.00	**COMMON REQUIREMENTS FOR NON INTRUSIVE ELECTRIC ACTUATORS**
2.01.00	**TYPE:**
2.01.01	The actuators shall have integral starters with built in SPP (Single Phasing Preventer). 415 V, 3 phase 3 wire power supply shall be given to the actuator from switch board as applicable through a switch fuse unit. Control voltage of the motor starter shall be 110 V AC / 24 V DC, derived suitably from 415V power supply.
2.01.02	The actuators shall be Non- Intrusive electric actuator. All actuator settings including torque, limit shall be possible without opening the actuator cover and LCD indication shall be available integral to actuator body.
2.02.00	**RATING:** (a) Supply Voltage & frequency: 415V +/- 10%, 3 Phase, 3 Wire & 50HZ +/-5%. (b) Sizing: Open/Close at rated speed against designed differential pressure at 90% of rated voltage. For ON/OFF type: Three successive open-close operations or 15 minutes, whichever is higher. For inching type: 150 starts per hour or required cycles, whichever is higher.
2.03.00	**CONSTRUCTION:** (a) Enclosure: Totally enclosed weatherproof, minimum IP-68 degree of protection. (b) Manual Wheel: Shall disengage automatically during motor operation.

2.04.00 MOTOR:

(a) Type :

Squirrel cage induction motor suitable for Direct On Line (DOL)starting.

(b) Enclosure:

Totally enclosed, self-ventilated.

(c) Insulation

Class F. Temperature rise 70 Deg C. over 50 Deg C ambient.

(d) Bearings:

Double shielded, grease lubricated antifriction.

(e) Earth Terminals:

Two

(f) Protection:

Single Phasing Protection, Over heating protection through Thermostat (as applicable) and wrong phase sequence protection shall be provided over and above other protection features standard to bidder's design. Suitable means shall be provided to diagnose the type of fault locally.

2.05.00 POSITION/TORQUE TRANSMITTER:

The Position/ Limit measurement shall be done using absolute encoders which will give information of position/ limit in both the directions. Electronic measurement of torque shall be provided.

2.06.00 LOCAL OPERATION:

It shall be possible to operate the actuator locally also. Lockable local/remote selection shall be provided on the actuator.

2.07.00 LCD DISPLAY:

A local LCD display shall be provided to give information regarding actuator alarms, status and valve position indications as a minimum in local.

2.08.00 WIRING:

Suitable voltage grade copper wire.

2.09.00 TERMINAL BLOCK:

For power cables, the grade of TBs shall be minimum 650V.

2.10.00 ACCESSORIES:

All required accessories (if applicable) for calibration / settings/ configuration of various parameters of actuator shall be provided. For quantities, please refer Part A of technical specifications.

2.11.00	**SIL CERTIFICATION:** All actuators shall be certified for SIL 2 or better.

4.00.00	**SPECIFIC REQUIREMENTS FOR NON INTRUSIVE FIELDBUS ACTUATORS**
4.01.00	**INTERFACES:** For ON-OFF and INCHING type actuators interface with the control system shall be through fieldbus network. (a) Open/ close commands, open/ close feedback status, disturbance signal etc. shall be available to the Control System through the fieldbus network along with diagnostics. The detailed diagnostics including the actuator operating data shall be available to the DDCMIS through the fieldbus network. (b) All actuators shall be Foundation Fieldbus/ Profibus compatible. However the exact protocol shall be based on finalized protocol of DDCMIS. If Profibus DP protocol is envisaged then actuator shall have two (redundant) Profibus DP ports for connecting the redundant Profibus DP cables. That is if one profibus cable is cut or not working/ not available, then complete actuator functionality shall be available through the second redundant cable without any manual intervention. (c) Open/close command termination logic shall be suitably built inside actuator.

	C&I SPECIFICATION FOR CPU SYSTEM	SECTION: C SUB SECTION: C&I

PROCESS CONNECTION, PIPING

PROCESS CONNECTION AND PIPING

1.00.00 **PROCESS CONNECTION PIPING**

1.01.00 The Contractor shall provide, install and test all required material for completeness of Impulse Piping System and Air Piping System as per the requirements of this Sub-Section on as required basis for the connection of all instruments and control equipments of entire plant.

1.01.01 **IMPULSE PIPING, TUBING, FITTINGS, VALVES AND VALVE MANIFOLDS**

1.01.02 All impulse pipes shall be of seamless type conforming to ANSI B36.10 for schedule numbers. The material of the impulse pipe shall be same as that of main process pipe or equivalent. The size of impulse pipe shall be ½" for Steam & Water Application and ¾" for Air & Flue Gas applications. The rating of material of impulse pipes, tubes, fittings, valves and their installation thereof shall conform to the latest edition of standards as per following table:

Impulse Pipes, Tubes (Material, Rating)	ANSI B31.1, ANSI B31.1a, ANSI/ISA 77.70
Valves (Material, Pr. Class, Size)	ASTM A182/ASTM A105 as per ASME 16.34
Fittings (Size, Rating, Material)	ANSI B31.1, ANSI B31.1a, ASME B16.11-2009
Installation Schemes	BS 6739-2009, ANSI/ISA 77.70

Stainless steel tube shall be provided inside enclosures & racks from tee connection to valve manifold and then to instrument. The source shut-off (primary process root valve) and blow down valve shall be of 1/2 inch size globe valve type for all applications except for air and flue gas service wherein no source shut-off valves are to be provided. Two root valves are to be used wherever pressure is more than 40 Kg/cm^2 or Temp>280 ^oC. The end connections of valves shall be of socket welded type. Typical installation scheme of DP Transmitter (inside LIE/LIR) mounted below instrument source point is indicated in Drg. No. 0000-999-POI-A-036. Same scheme with necessary changes shall be applied for other instruments.

1.01.03 The valve manifolds of 316 SS with pressure rating suitable for intended application shall be provided as given below:

Manifold	Application/Measurement
2 Valve	Pressure measurements using pressure transmitters/pressure switches
3 Valve	Pressure measurements using differential pressure transmitter/ switches
5 Valve	Differential Pressure, Flow and Level Measurements

For Pr./D.P gauges, two-way globe/gate valve shall be provided on each impulse line to the instrument in Fluid/Air & Flue Gas applications respectively .

2.00.00 **AIR SUPPLY PIPING**

2.01.01 All pneumatic piping, fittings, valves, air filter cum regulator, purge rotameter and other accessories required for instrument air for the various pneumatic devices/ instruments shall be provided. This will include as a minimum air supply to pneumatically operated control valves, actuators, instruments, continuous and intermittent purging requirements etc.

2.02.00 Instrument air and Service air supply shall be provided for continuous and intermittent purging respectively for all transmitters of mill, dirty air and flue gas applications. Purging Scheme shall be as per Drg. No. 0000-999-POI-A-036.

2.03.00 The Contractor shall also provide SS Tubing and associated fittings (screwed type) of suitable sizes for all pneumatic equipments/actuators (including supply air, signal air and output to actuators) conforming to ANSI 31.1 and 31.3 standard. All other air supply lines

shall be of mild steel hot dipped galvanized inside and outside as per IS-1239, heavy duty with threaded ends. Fittings for air supply line shall be of forged carbon steel A234 Gr. WPB galvanized inside and outside, screwed as per ASA B2.1. Dimensions of fittings shall be as per ASA B16.11 of rating 3000 lbs. Air supply piping shall be adequately sloped to prevent accumulation of condensed water within the pipe. The air supply headers, sub-headers and branch pipes shall be supported properly by clamps or supports.

2.04.00 The instrument/service air supply to each equipment/devices requiring air supply shall be provided by a well designed air distribution scheme comprising of 2" GI Pipe Header feeding 1" GI Pipe sub-header feeding ½" pipe at each equipment/device. Instrument air filters cum regulator set with mounting accessories shall be provided for each pneumatic device requiring air supply except for Ash Handling System wherein it shall be provided on instrument air header at each location.

2.05.00 All the isolation valves in the air supply line shall be gate valves as per ASTM B62 inside screw rising stem, screwed female ends as per ASA B2.1. Valve bonnet shall be union type & trim material shall be stainless steel, body rating 150 pounds ASA. The valve sizes shall be ½ inch to 2 inch.

2.06.00 Instrument air filters cum regulator set with mounting accessories shall be provided for pneumatic device requiring air supply. The filter regulators shall be suitable for 10-kg/ sq.cm max. Inlet pressure. The filter shall be of size 5 microns and of material sintered bronze. The air set shall have 2-inch size pressure gauge and built in filter housing blowdown valve. The end connection shall be as per the requirement to be finalized during detailed engineering.

3.00.00 **INSTALLATION AND ROUTING**

3.01.01 All instrument piping, tubing and its accessories shall be supported in a safe manner to prevent excessive vibrations and anchored sufficiently to prevent undue strain on connected equipment. Impulse piping shall be supported at an interval not exceeding 1.5 meters. The slope of the impulse pipe form the process connection to the instrument shall be as per ANSI/ISA 77.70 latest edition and BS 6739-2009. All impulse piping shall be installed to permit free movement due to thermal expansion. Wherever required expansion loops shall be provided.

Condensate pots shall be provided for all level measurements in steam and water services, all flow measurement in steam services and for flow measurements in water services above 120 Deg. C. Colour coding of all impulse pipes shall be done by the Contractor in line with the colour coding being followed for the parent pipes.

4.00.00 **SHOP AND SITE TESTS**

4.01.01 The equipment and work performed as per this Sub-section shall be subject to shop and site test as per requirements of Sub-section-IIIE-04 (Quality Assurance & Inspection) other applicable clauses of this Sub-section and Employer approved quality assurance plan.

4.01.02 Hydrostatic and Pneumatic leakage tests shall be performed on all pipes, tubing and systems and shall conform to ANSI B31.1.

5.00.00 **LOCAL INSTRUMENT ENCLOSURE AND RACKS**

All transmitters, switches etc. in Boiler Turbine Generator measurements (except for all fuel oil applications) shall be suitably grouped together and mounted inside (i) local instruments enclosures in case of open areas of the plant like boiler area, etc. and (ii) In local instrument racks in case of covered areas like Turbine/Generator area. The GA of LIE with purging indicated in the Drg. No. 0000-999-POI-A-036 is to be followed by contractor.

The GA of LIR shall be similar to LIE except for front/rear doors and side panels.
.
The internal layout shall be such that the impulse piping/ blow down lines are accessible from back side of the enclosure / rack and the transmitters etc. are accessible from front side for easy maintenance. Bulkheads, especially designed to provide isolation from process line vibration shall be installed on instrument enclosures/racks to meet the process sensing line connection requirement. Vibration dampeners shall be installed for each enclosure / rack. The Degree of Protection of LIE and JB of LIE/LIR shall be IP-55.

The instrument racks shall be constructed from 1.6 mm sheet plate and shall be free standing type constructed of suitable 3 mm thick channel frame of steel and shall be provided with a canopy to protect the equipment mounted in racks from falling objects, water etc. The canopy shall not be less than 3 mm thick steel, and extended beyond the ends of the rack.

Enclosures/Racks shall be reinforced as required to ensure true surface and to provide adequate support for instruments and equipment mounted therein. Centre posts or any member which would reduce access shall not be provided.

Contractor shall provide not more than three variants for LIE/LIR with respect to max. no. transmitters mounted in each LIE/LIR.

5.01.00 ENCLOSURE / RACKS FOR DUAL/SINGLE I/P TEMPERATURE TRANSMITTERS

All Dual/Single Input temperature transmitters in Boiler Turbine Generator measurements shall be suitably grouped together and mounted inside (i) Enclosures in case of open areas of the plant like boiler area, etc. and (ii) Racks in case of covered areas like Turbine/Generator area. Integral JB shall be provided with each Enclosure and Rack.

The internal layout shall be such that the transmitters are accessible from both front and back side of the enclosure / rack for easy maintenance.

Enclosure/ Racks shall be of robust and rugged design. Vibration dampeners shall be installed for each enclosure / rack. The Degree of Protection of Enclosure and JB shall be IP-55.

Enclosure and Racks shall be free standing type.

Enclosures/Racks shall be reinforced as required to ensure true surface and to provide adequate support for instruments and equipment mounted therein.

Contractor shall provide not more than five variants for Enclosure/ Rack with respect to max. no. transmitters mounted in each Enclosure/ Rack. However, the maximum number of Transmitters that can be grouped in one Enclosure/ Rack shall be decided during detail Engineering.

5.02.00 Local Control Panels:

Local control panels shall be designed as per IP class 65 or better. These local panels shall be suitably placed taking care of safety of the operating personnel and Instruments. For Hot and dusty environment / process (e.g. Mill reject, Ash hoppers etc), panels shall be placed at least 5mtrs away from the process.

7.00.00 **Painting Color scheme for Impulse Piping:**

Sl. No.	Area / Equipment	Impulse Pipe Ground Color		Identification Tag/Band		
		Color	RAL	Color	ISC No.	RAL
1.	Air	Grey	9002	Sky Blue	101	
2.	Water	Grey	9002	Sea Green	217	
3.	Steam	Aluminium		Signal Red	537	3001
4.	Air Steam Mixture	Aluminium		Sky Blue	101	
5.	Gas	Grey	9002	Canary Yellow	309	
6.	Oils	Grey	9002	Light Brown	410	
7.	Pulverized Fuel	Grey	9002	Silver Grey	628	
8.	Fire Installations	Fire Red	536 (ISC) 3001 (RAL)	White		9010
9.	HP Dosing	Grey	9002	Dark Admiralty Grey	632	
10.	LP Dosing / acid / alkali Piping	Grey	9002	Signal Red	537	
11.	Ash Piping	Grey	9002	French Blue	166	

Note: Ground color indicated against each piping shall be followed in case piping is not insulated /cladded.

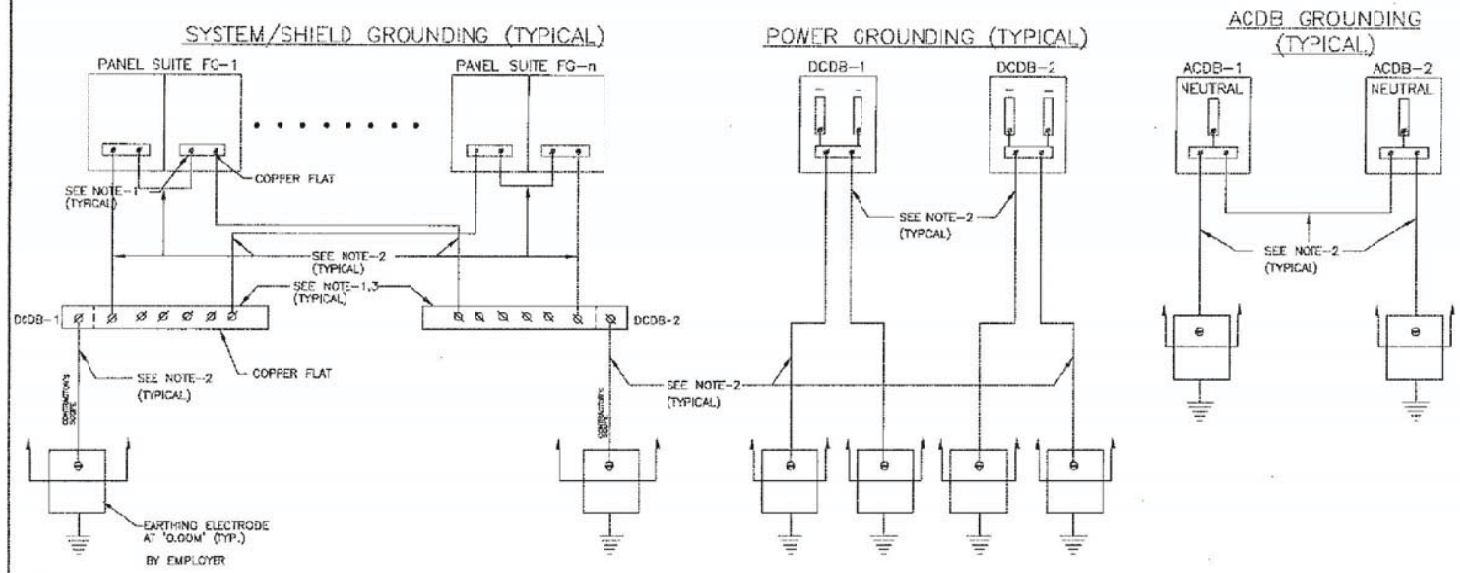

NOTES:--

1. SUPPLY, ERECTION, TERMINATION OF CABLES, FLATS ETC. REQUIRED FOR PROPER GROUNDING OF CONTRACTOR's CONTROL SYSTEM, SYSTEM CABINETS, POWER SUPPLY CABINETS ETC. ARE IN THE SCOPE OF CONTRACTOR.
2. CABLE IN CONTRACTOR'S SCOPE.
3. TO BE LOCATED IN DCDB.
4. EXACT LOCATION, ARRANGEMENTS OF FLATS ETC. SHALL BE AS FINALISED WITH CONTRACTOR. DURING DETAILED ENGINEERING.
5. CABINET BODY, CABNET BOTTOM PLATE, CABINET DOORS ARE TO BE CONNECTED TO PANEL EARTH FLAT COPPER CABLE BY CONTRACTOR.

FOR TENDER PURPOSE ONLY

This document is the property of NATIONAL THERMAL POWER CORPORATION LTD.
No part of this document will be reproduced by any means without the written permission.

एन टी पी सी NTPC

N T P C LIMITED
(A GOVERNMENT OF INDIA ENTERPRISE)
ENGINEERING DIVISION

PROJECT: TYPICAL THERMAL POWER PROJECT

TITLE: INSTRUMENTATION CABLING DIAGRAM
GROUNDING SCHEME FOR CABINETS / PANELS / POWER SUPPLY

REV.NO.	DESCRIPTION	DRAWN	DESIGN	CHKD.	M	E	C	C&I	ARCH.	APPD	DATE
A	FIRST ISSUE										21.08.12

CLEARED BY

SIZE	SCALE	DRG. NO.	REV. NO.
A3	N.T.S.	0000-999-PO-A-019A SH-1 OF 2	A

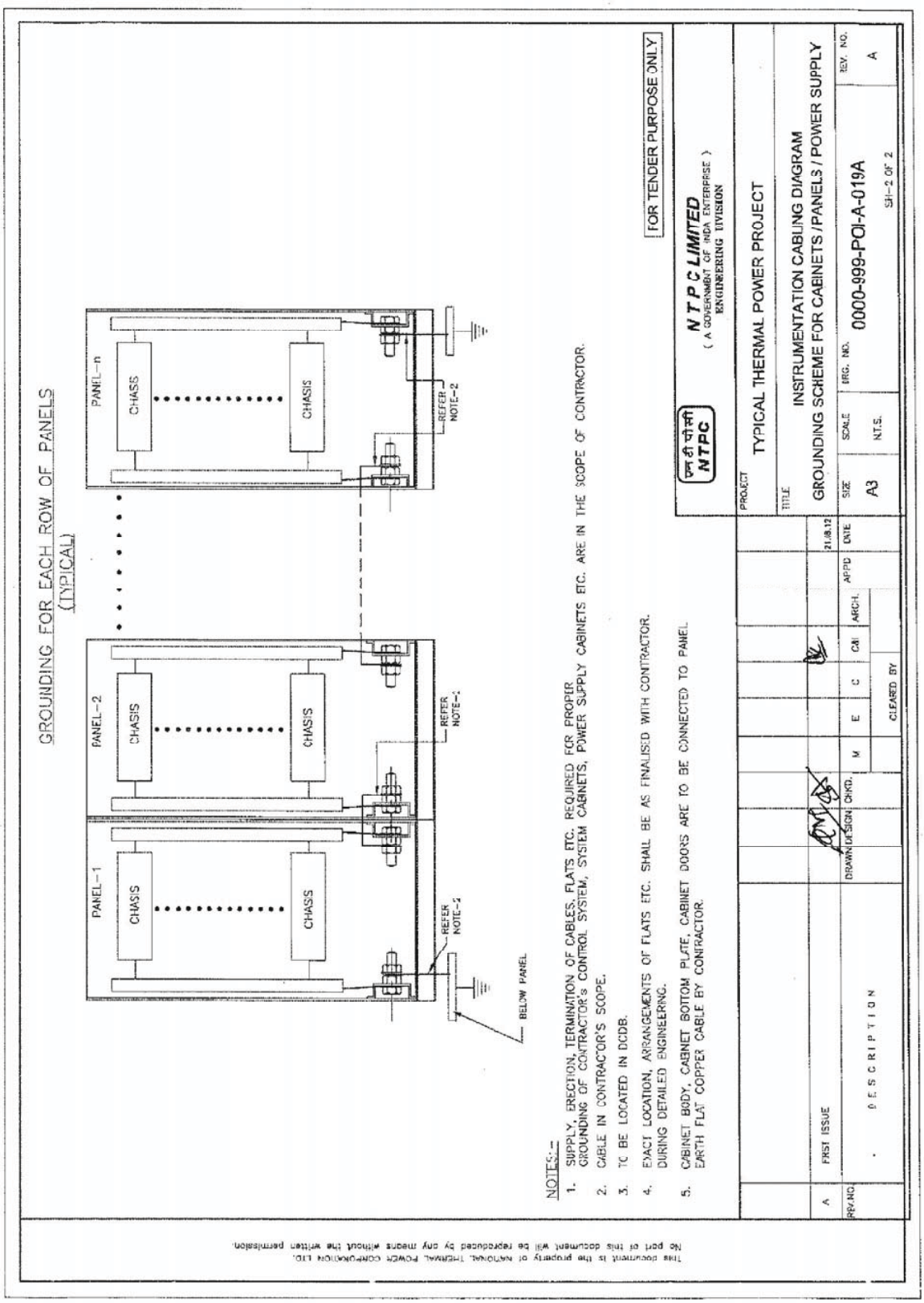
GROUNDING FOR EACH ROW OF PANELS
(TYPICAL)
PANEL-1
PANEL-2
PANEL-n
CHASIS
REFER NOTE-4
REFER NOTE-2
BELOW PANEL
NOTES:-
1. SUPPLY, ERECTION, TERMINATION OF CABLES, FLATS ETC. REQUIRED FOR PROPER GROUNDING OF CONTRACTOR's CONTROL SYSTEM, SYSTEM CABINETS, POWER SUPPLY CABINETS ETC. ARE IN THE SCOPE OF CONTRACTOR.
2. CABLE IN CONTRACTOR'S SCOPE.
3. TO BE LOCATED IN DCDB.
4. EXACT LOCATION, ARRANGEMENTS OF FLATS ETC. SHALL BE AS FINALISED WITH CONTRACTOR. DURING DETAILED ENGINEERING.
5. CABINET BODY, CABINET BOTTOM PLATE, CABINET DOORS ARE TO BE CONNECTED TO PANEL EARTH FLAT COPPER CABLE BY CONTRACTOR.
FOR TENDER PURPOSE ONLY
NTPC LIMITED
(A GOVERNMENT OF INDIA ENTERPRISE)
ENGINEERING DIVISION
PROJECT
TYPICAL THERMAL POWER PROJECT
TITLE
INSTRUMENTATION CABLING DIAGRAM
GROUNDING SCHEME FOR CABINETS / PANELS / POWER SUPPLY
SIZE A3
SCALE N.T.S.
DRG. NO. 0000-999-POI-A-019A
SH-2 OF 2
REV. NO. A
REV.NO. DESCRIPTION DRAWN DESIGN CHKD. M E C CM ARCH. APPD DATE
A FIRST ISSUE 21.8.12
CLEARED BY
This document is the property of NATIONAL THERMAL POWER CORPORATION LTD. No part of this document will be reproduced by any means without the written permission.

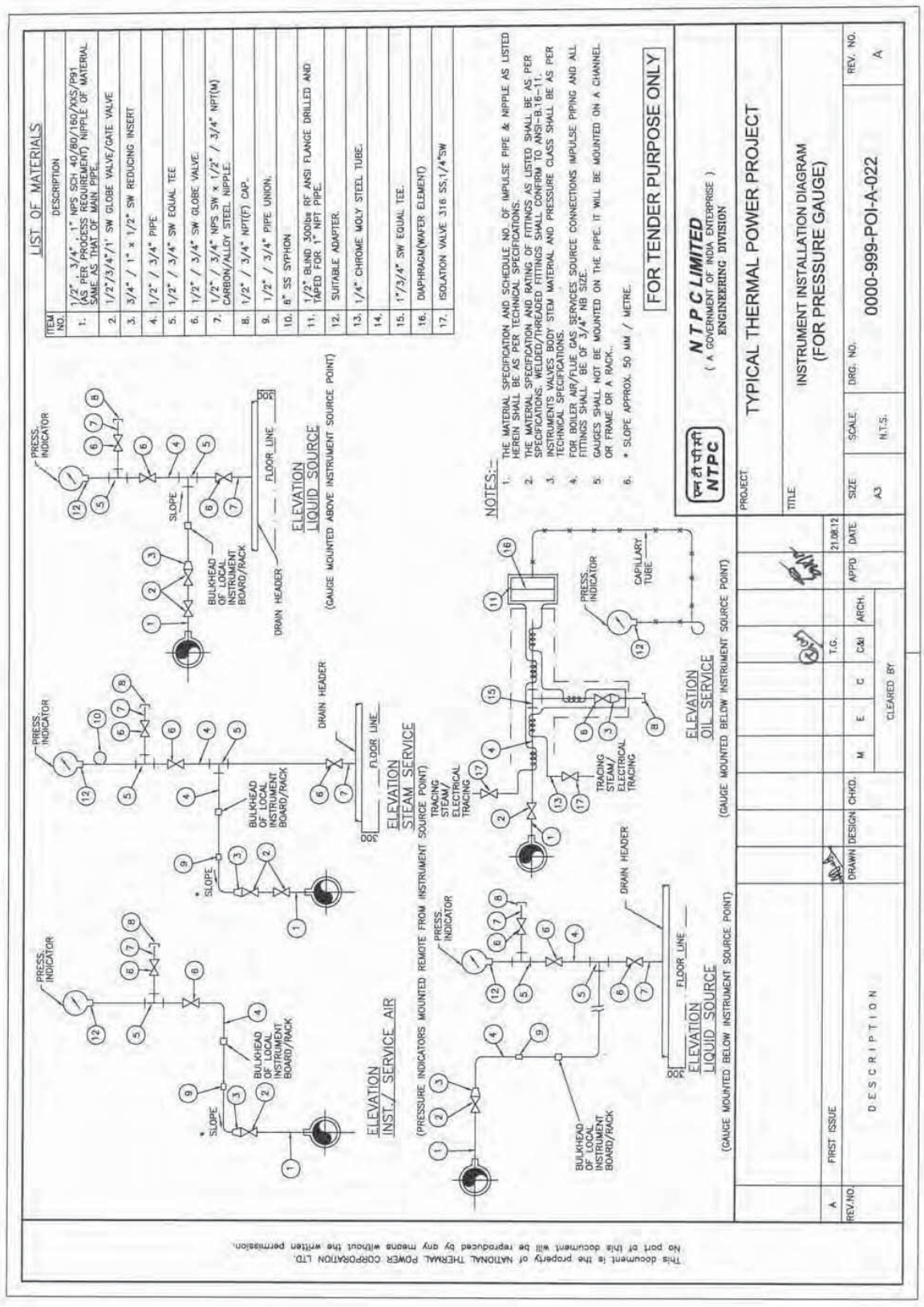
LIST OF MATERIALS
ITEM NO.
DESCRIPTION
1. 1/2" 3/4" 1" NPS SCH 40/80/160/XXS/PB1 (AS PER PROCESS REQUIREMENT) NIPPLE OF MATERIAL SAME AS THAT OF MAIN PIPE.
2. 1/2"/3/4"/1" SW GLOBE VALVE/GATE VALVE
3. 3/4" / 1" x 1/2" SW REDUCING INSERT
4. 1/2" / 3/4" PIPE
5. 1/2" / 3/4" SW EQUAL TEE
6. 1/2" / 3/4" SW GLOBE VALVE.
7. 1/2" / 3/4" NPS SW x 1/2" / 3/4" NPT(M) CARBON/ALLOY STEEL NIPPLE.
8. 1/2" / 3/4" NPT(F) CAP.
9. 1/2" / 3/4" PIPE UNION.
10. 8" SS SYPHON
11. 1/2" BLIND 300lbs RF ANSI FLANGE DRILLED AND TAPED FOR 1" NPT PIPE.
12. SUITABLE ADAPTER.
13. 1/4" CHROME MOLY STEEL TUBE.
14.
15. 1"/3/4" SW EQUAL TEE.
16. DIAPHRAGM(WAFER ELEMENT)
17. ISOLATION VALVE 316 SS,1/4"SW
NOTES:-
1. THE MATERIAL SPECIFICATION AND SCHEDULE NO. OF IMPULSE PIPE & NIPPLE AS LISTED HEREIN SHALL BE AS PER TECHNICAL SPECIFICATIONS.
2. THE MATERIAL SPECIFICATION AND RATING OF FITTINGS AS LISTED SHALL BE AS PER SPECIFICATIONS. WELDED/THREADED FITTINGS SHALL CONFIRM TO ANSI-B.16-11.
3. INSTRUMENTS VALVES BODY STEM MATERIAL AND PRESSURE CLASS SHALL BE AS PER TECHNICAL SPECIFICATIONS.
4. FOR BOILER AIR/FLUE GAS SERVICES SOURCE CONNECTIONS IMPULSE PIPING AND ALL FITTINGS SHALL BE OF 3/4" NB SIZE.
5. GAUGES SHALL NOT BE MOUNTED ON THE PIPE. IT WILL BE MOUNTED ON A CHANNEL OR FRAME OR A RACK.
6. * SLOPE APPROX. 50 MM / METRE.
FOR TENDER PURPOSE ONLY
NTPC LIMITED
(A GOVERNMENT OF INDIA ENTERPRISE)
ENGINEERING DIVISION
PROJECT: TYPICAL THERMAL POWER PROJECT
TITLE: INSTRUMENT INSTALLATION DIAGRAM (FOR PRESSURE GAUGE)
SIZE: A3
SCALE: N.T.S.
DRG. NO. 0000-999-POI-A-022
REV. NO. A
REV.NO. DESCRIPTION DRAWN DESIGN CHKD. M E C T.G. C&I ARCH. APPD DATE
A FIRST ISSUE 21.08.12
CLEARED BY
ELEVATION INST./ SERVICE AIR
(PRESSURE INDICATORS MOUNTED REMOTE FROM INSTRUMENT SOURCE POINT)
ELEVATION LIQUID SOURCE
(GAUGE MOUNTED BELOW INSTRUMENT SOURCE POINT)
ELEVATION STEAM SERVICE
(GAUGE MOUNTED ABOVE INSTRUMENT SOURCE POINT)
ELEVATION OIL SERVICE
(GAUGE MOUNTED BELOW INSTRUMENT SOURCE POINT)
PRESS. INDICATOR
BULKHEAD OF LOCAL INSTRUMENT BOARD/RACK
DRAIN HEADER
FLOOR LINE
TRACING STEAM/ ELECTRICAL TRACING
CAPILLARY TUBE
SLOPE
This document is the property of NATIONAL THERMAL POWER CORPORATION LTD.
No part of this document will be reproduced by any means without the written permission.

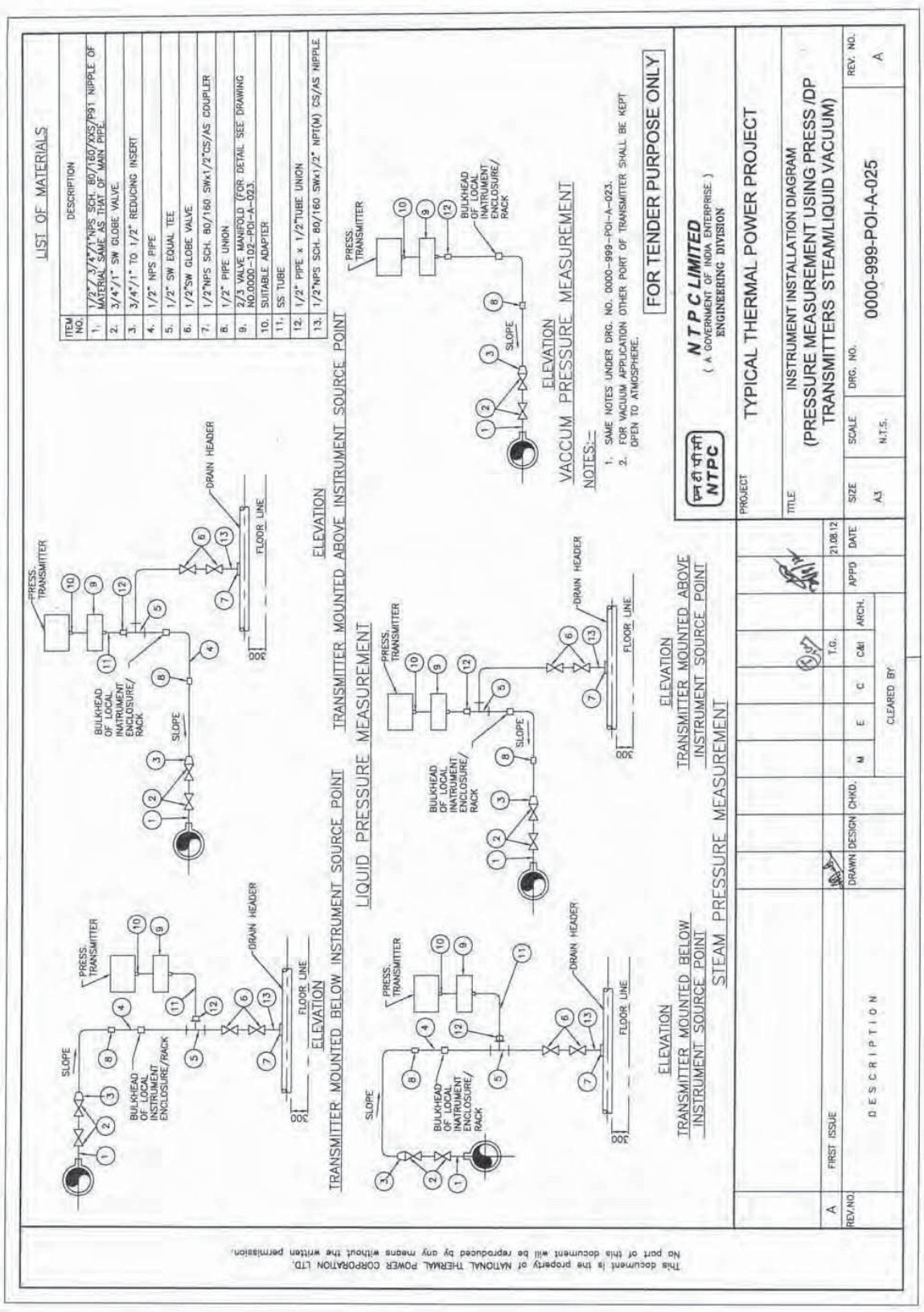
LIST OF MATERIALS
ITEM NO. | DESCRIPTION
1. 1/2"/ 3/4"/1"NPS SCH. 80/160/XXS/P91 NIPPLE OF MATERIAL SAME AS THAT OF MAIN PIPE
2. 3/4"/1" SW GLOBE VALVE.
3. 3/4"/1" TO 1/2" REDUCING INSERT
4. 1/2" NPS PIPE
5. 1/2" SW EQUAL TEE
6. 1/2"SW GLOBE VALVE.
7. 1/2"NPS SCH. 80/160 SWx1/2"CS/AS COUPLER
8. 1/2" PIPE UNION
9. 2/3 VALVE MANIFOLD (FOR DETAIL SEE DRAWING NO.0000-102-POI-A-023.
10. SUITABLE ADAPTER
11. SS TUBE
12. 1/2" PIPE x 1/2"TUBE UNION
13. 1/2"NPS SCH. 80/160 SWx1/2" NPT(M) CS/AS NIPPLE
TRANSMITTER MOUNTED BELOW INSTRUMENT SOURCE POINT
LIQUID PRESSURE MEASUREMENT
ELEVATION
TRANSMITTER MOUNTED ABOVE INSTRUMENT SOURCE POINT
LIQUID PRESSURE MEASUREMENT
ELEVATION
TRANSMITTER MOUNTED BELOW INSTRUMENT SOURCE POINT
STEAM PRESSURE MEASUREMENT
ELEVATION
TRANSMITTER MOUNTED ABOVE INSTRUMENT SOURCE POINT
STEAM PRESSURE MEASUREMENT
ELEVATION
VACCUM PRESSURE MEASUREMENT
PRESS. TRANSMITTER
BULKHEAD OF LOCAL INATRUMENT ENCLOSURE/ RACK
DRAIN HEADER
FLOOR LINE
SLOPE
NOTES:-
1. SAME NOTES UNDER DRG. NO. 0000-999-POI-A-023.
2. FOR VACUUM APPLICATION OTHER PORT OF TRANSMITTER SHALL BE KEPT OPEN TO ATMOSPHERE.
FOR TENDER PURPOSE ONLY
NTPC LIMITED
(A GOVERNMENT OF INDIA ENTERPRISE)
ENGINEERING DIVISION
PROJECT
TYPICAL THERMAL POWER PROJECT
TITLE
INSTRUMENT INSTALLATION DIAGRAM
(PRESSURE MEASUREMENT USING PRESS /DP TRANSMITTERS STEAM/LIQUID VACUUM)
SIZE A3
SCALE N.T.S.
DRG. NO. 0000-999-POI-A-025
REV. NO. A
REV.NO. DESCRIPTION DRAWN DESIGN CHKD. M E C C&I ARCH. APPD DATE
A FIRST ISSUE T.G. 21.08.12
CLEARED BY
This document is the property of NATIONAL THERMAL POWER CORPORATION LTD. No part of this document will be reproduced by any means without the written permission.

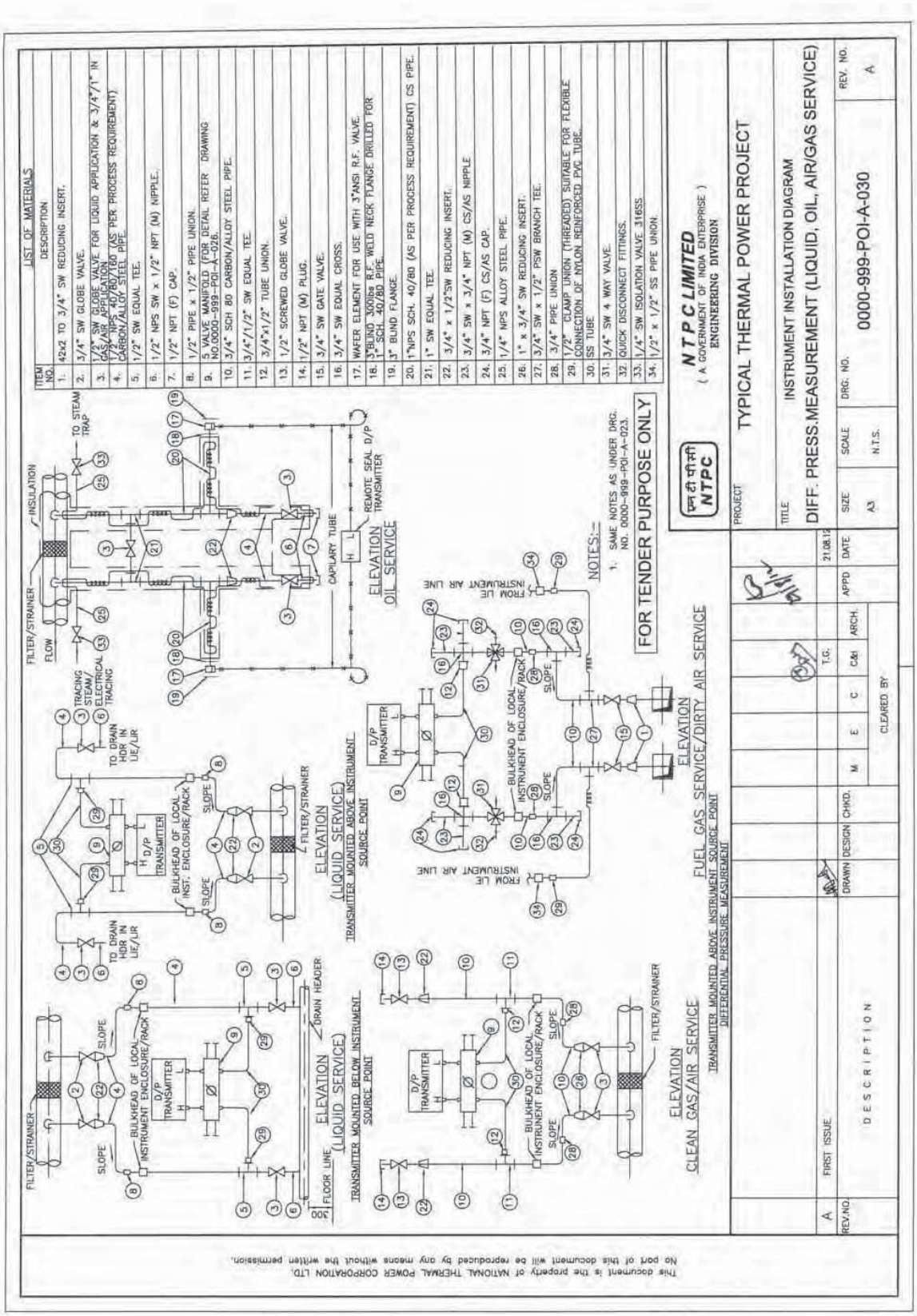
LIST OF MATERIALS
ITEM NO. DESCRIPTION
1. 42x2 TO 3/4" SW REDUCING INSERT.
2. 3/4" SW GLOBE VALVE.
3. 1/4" SW GLOBE VALVE FOR LIQUID APPLICATION & 3/4"/1" IN GAS/AIR APPLICATION.
4. 1/2" NPS 40/80/160 (AS PER PROCESS REQUIREMENT) CARBON/ALLOY STEEL PIPE.
5. 1/2" SW EQUAL TEE.
6. 1/2" NPS SW x 1/2" NPT (M) NIPPLE.
7. 1/2" NPT (F) CAP.
8. 1/2" PIPE x 1/2" PIPE UNION.
9. 5 VALVE MANIFOLD (FOR DETAIL REFER DRAWING NO.0000-999-POI-A-026.
10. 3/4" SCH 80 CARBON/ALLOY STEEL PIPE.
11. 3/4"x1/2" SW EQUAL TEE.
12. 3/4"x1/2" TUBE UNION.
13. 1/2" SCREWED GLOBE VALVE.
14. 1/2" NPT (M) PLUG.
15. 3/4" SW GATE VALVE.
16. 3/4" SW EQUAL CROSS.
17. WAFER ELEMENT FOR USE WITH 3"ANSI R.F. VALVE.
18. 3"BLIND 3000lbs R.F. WELD NECK FLANGE DRILLED FOR 1" SCH. 40/80 PIPE.
19. 3" BLIND FLANGE.
20. 1"NPS SCH. 40/80 (AS PER PROCESS REQUIREMENT) CS PIPE.
21. 1" SW EQUAL TEE.
22. 3/4" x 1/2"SW REDUCING INSERT.
23. 3/4" SW x 3/4" NPT (M) CS/AS NIPPLE
24. 3/4" NPT (F) CS/AS CAP.
25. 1/4" NPS ALLOY STEEL PIPE.
26. 1" x 3/4" SW REDUCING INSERT.
27. 3/4" SW x 1/2" PSW BRANCH TEE.
28. 3/4" PIPE UNION
29. 1/2" CLAMP UNION (THREADED) SUITABLE FOR FLEXIBLE CONNECTION OF NYLON REINFORCED PVC TUBE.
30. SS TUBE
31. 3/4" SW 4 WAY VALVE.
32. QUICK DISCONNECT FITTINGS.
33. 1/4" SW ISOLATION VALVE 316SS.
34. 1/2" x 1/2" SS PIPE UNION.
NOTES:-
1. SAME NOTES AS UNDER DRG. NO. 0000-999-POI-A-023.
FOR TENDER PURPOSE ONLY
NTPC LIMITED
(A GOVERNMENT OF INDIA ENTERPRISE)
ENGINEERING DIVISION
PROJECT TYPICAL THERMAL POWER PROJECT
TITLE INSTRUMENT INSTALLATION DIAGRAM
DIFF. PRESS.MEASUREMENT (LIQUID, OIL, AIR/GAS SERVICE)
SIZE A3
SCALE N.T.S.
DRG. NO. 0000-999-POI-A-030
REV. NO. A
REV.NO. DESCRIPTION DRAWN DESIGN CHKD. M E C C&I ARCH. APPD DATE
A FIRST ISSUE T.G. 21.06.12
CLEARED BY
FILTER/STRAINER
INSULATION
TO STEAM TRAP
TRACING STEAM/ ELECTRICAL TRACING
TO DRAIN HDR IN I/E/UR
BULKHEAD OF LOCAL INSTRUMENT ENCLOSURE/RACK
D/P TRANSMITTER
SLOPE
FLOOR LINE
DRAIN HEADER
ELEVATION (LIQUID SERVICE)
TRANSMITTER MOUNTED BELOW INSTRUMENT SOURCE POINT
ELEVATION (LIQUID SERVICE)
TRANSMITTER MOUNTED ABOVE INSTRUMENT SOURCE POINT
ELEVATION CLEAN GAS/AIR SERVICE
TRANSMITTER MOUNTED ABOVE INSTRUMENT SOURCE POINT DIFFERENTIAL PRESSURE MEASUREMENT
ELEVATION FUEL GAS SERVICE/DIRTY AIR SERVICE
FROM I/E INSTRUMENT AIR LINE
ELEVATION OIL SERVICE
CAPILLARY TUBE
REMOTE SEAL D/P TRANSMITTER
This document is the property of NATIONAL THERMAL POWER CORPORATION LTD. No part of this document will be reproduced by any means without the written permission.

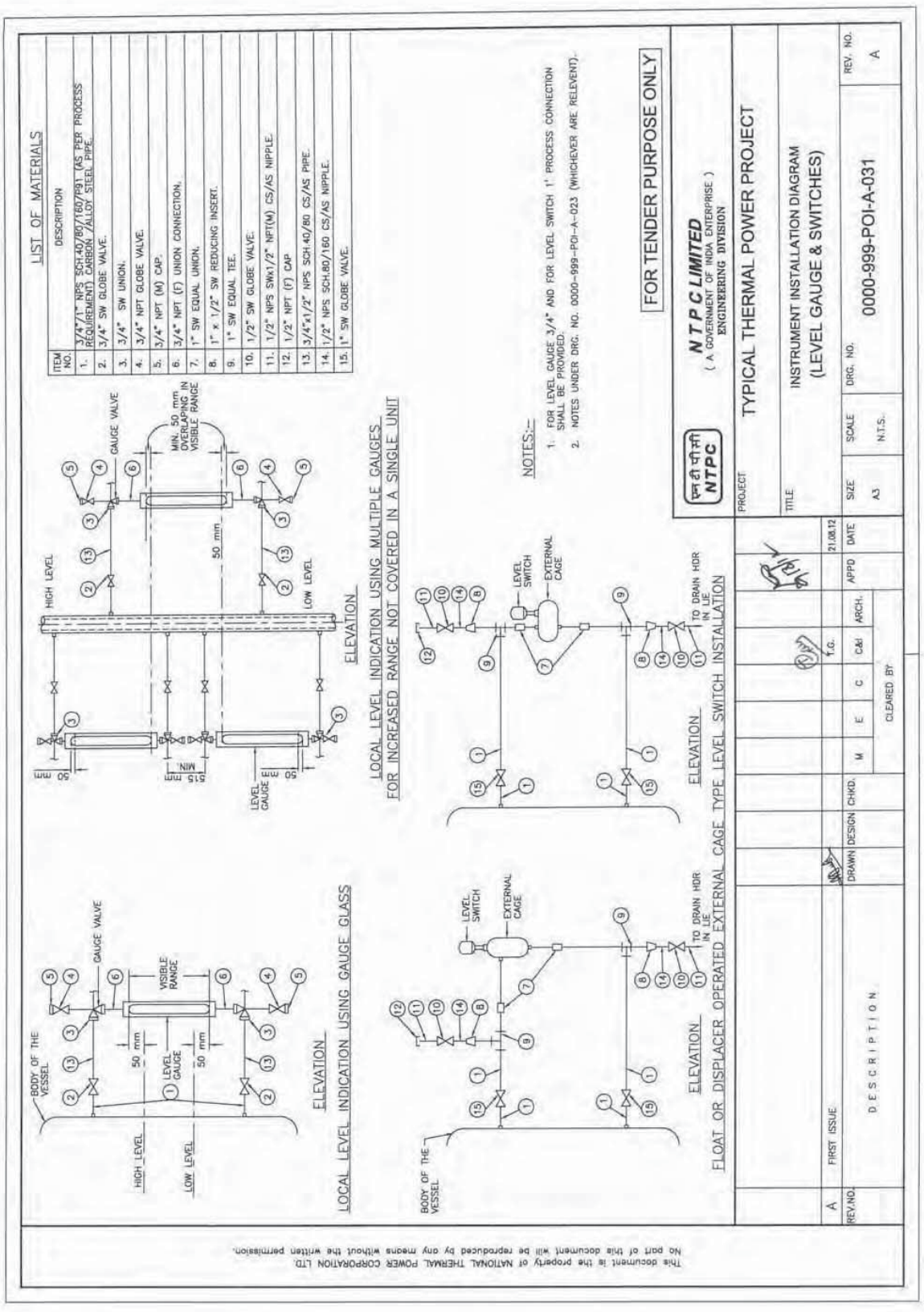
LIST OF MATERIALS
ITEM NO. | DESCRIPTION
1. 3/4"/1" NPS SCH.40/80/160/PB1 (AS PER PROCESS REQUIREMENT) CARBON / ALLOY STEEL PIPE.
2. 3/4" SW GLOBE VALVE.
3. 3/4" SW UNION.
4. 3/4" NPT GLOBE VALVE.
5. 3/4" NPT (M) CAP.
6. 3/4" NPT (F) UNION CONNECTION.
7. 1" SW EQUAL UNION.
8. 1" x 1/2" SW REDUCING INSERT.
9. 1" SW EQUAL TEE.
10. 1/2" SW GLOBE VALVE.
11. 1/2" NPS SWx1/2" NPT(M) CS/AS NIPPLE.
12. 1/2" NPT (F) CAP
13. 3/4"x1/2" NPS SCH.40/80 CS/AS PIPE.
14. 1/2" NPS SCH.80/160 CS/AS NIPPLE.
15. 1" SW GLOBE VALVE.
NOTES:-
1. FOR LEVEL GAUGE 3/4" AND FOR LEVEL SWITCH 1" PROCESS CONNECTION SHALL BE PROVIDED.
2. NOTES UNDER DRG. NO. 0000-999-POI-A-023 (WHICHEVER ARE RELEVENT).
FOR TENDER PURPOSE ONLY
N T P C LIMITED
(A GOVERNMENT OF INDIA ENTERPRISE)
ENGINEERING DIVISION
PROJECT: TYPICAL THERMAL POWER PROJECT
TITLE: INSTRUMENT INSTALLATION DIAGRAM (LEVEL GAUGE & SWITCHES)
SIZE: A3
SCALE: N.T.S.
DRG. NO.: 0000-999-POI-A-031
REV. NO.: A
REV.NO. | DESCRIPTION | DRAWN | DESIGN | CHKD. | M | E | C | C&I | ARCH. | APPD | DATE
A | FIRST ISSUE | | | | | | | | | | 21.08.12
CLEARED BY
LOCAL LEVEL INDICATION USING GAUGE GLASS
ELEVATION
BODY OF THE VESSEL
GAUGE VALVE
VISIBLE RANGE
LEVEL GAUGE
50 mm
HIGH LEVEL
LOW LEVEL
LOCAL LEVEL INDICATION USING MULTIPLE GAUGES FOR INCREASED RANGE NOT COVERED IN A SINGLE UNIT
ELEVATION
MIN. 50 mm OVERLAPING IN VISIBLE RANGE
515 MIN
FLOAT OR DISPLACER OPERATED EXTERNAL CAGE TYPE LEVEL SWITCH INSTALLATION
ELEVATION
LEVEL SWITCH
EXTERNAL CAGE
TO DRAIN HDR IN LIE
This document is the property of NATIONAL THERMAL POWER CORPORATION LTD.
No part of this document will be reproduced by any means without the written permission.

This document is the property of NATIONAL THERMAL POWER CORPORATION LTD.
No part of this document will be reproduced by any means without the written permission.

This is part of Technical Specification No. PE-TS-475-155-A001

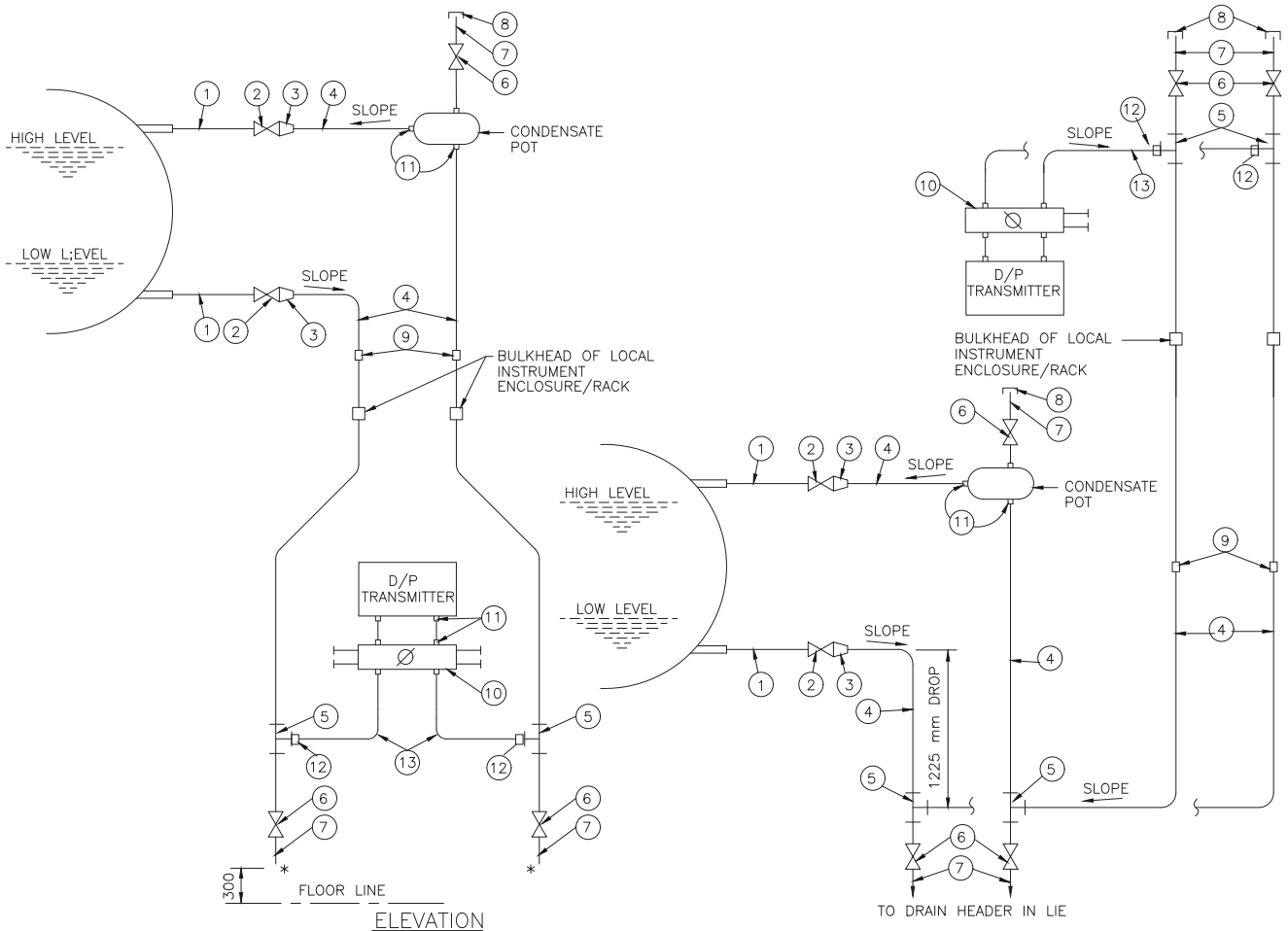

LIST OF MATERIALS

ITEM NO.	DESCRIPTION
1.	1" NPS SCH.40/80/160/XXS/P91 (AS PER PROCESS REQUIREMENT) CARBON /ALLOY STEEL PIPE.
2.	1" SW GLOBE VALVE.
3.	3/4"/1" TO 1/2" REDUCING INSERT.
4.	1/2" NPS SCH.80/160/XXS(AS PER PROCESS REQ.)CS/AS PIPE.
5.	1/2" SW EQUAL TEE.
6.	1/2" SW GLOBE VALVE.
7.	1/2" NPS SWx1/2" NPT(M) CS/AS NIPPLE.
8.	1/2 NPT (F) CAP.
9.	1/2" PIPE UNION.
10.	5-VALVE MANIFOLD (FOR DETAILS REF. DRG. NO.0000-999-POI-A-026.
11.	SUITABLE ADAPTER.
12.	1/2" PIPE x 1/2" TUBE UNION.
13.	S.S. TUBE.

NOTES:-

1. SAME NOTES AS UNDER DRG. NO.0000-999-POI-A-023. (WHICHEVER ARE RELEVENT).

* TO DRAIN HEADER IN LIE/LIR.

FOR TENDER PURPOSE ONLY

LEVEL MEASUREMENT OF CLEAR NON-VISCOUS OR NON-CORROSIVE LIQUID IN CLOSED VESSEL WITH CONDENSABLE ATMOSPHERE USING D/P TRANSMITTER

CLIENT **THDC INDIA LIMITED**
(A JOINT VENTURE OF GOVT. OF INDIA & GOVT. OF UP)

CONSULTANT **N T P C LIMITED**
(A GOVERNMENT OF INDIA ENTERPRISE)
ENGINEERING DIVISION

PROJECT: TYPICAL THERMAL POWER PROJECT (TG PACKAGE)

TITLE: INSTRUMENT INSTALLATION DIAGRAM (LEVEL MEASUREMENT USING D/P TRANSMITTERS)

REV.NO.	DESCRIPTION	DRAWN	DESIGN	CHKD.	M	E	C	C&I	ARCH.	APPD	DATE
A	FIRST ISSUE										26.04.06

CLEARED BY

SIZE	SCALE	DRG. NO.	REV. NO.
A3	N.T.S.	0000-110-POI-A-032 SH 1 OF 2	A

	C&I SPECIFICATION FOR CPU SYSTEM	SECTION: C SUB SECTION: C&I

DRIVE & INSTRUMENT INTERFACE DIAGRAM

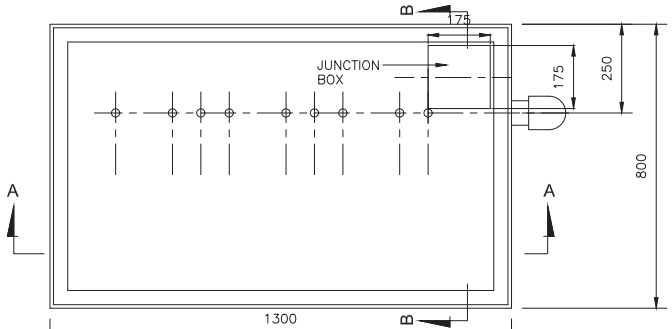

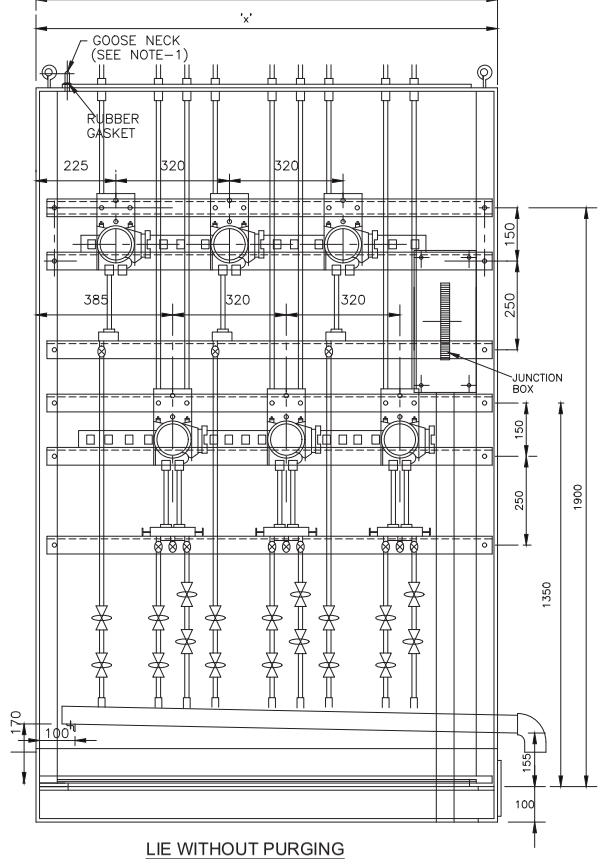

LIE WITHOUT PURGING

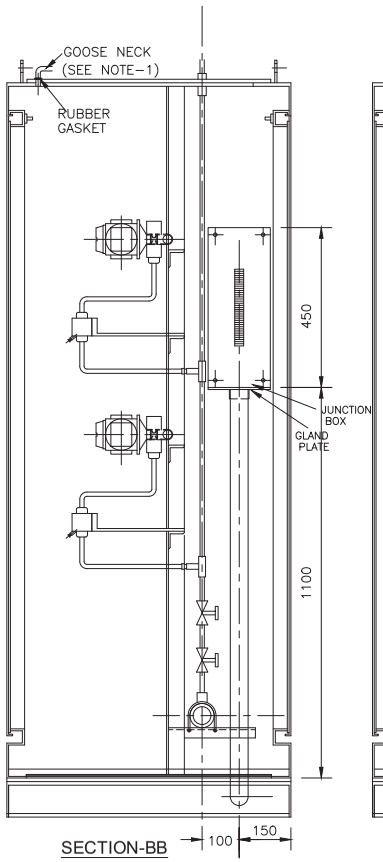

SECTION-BB

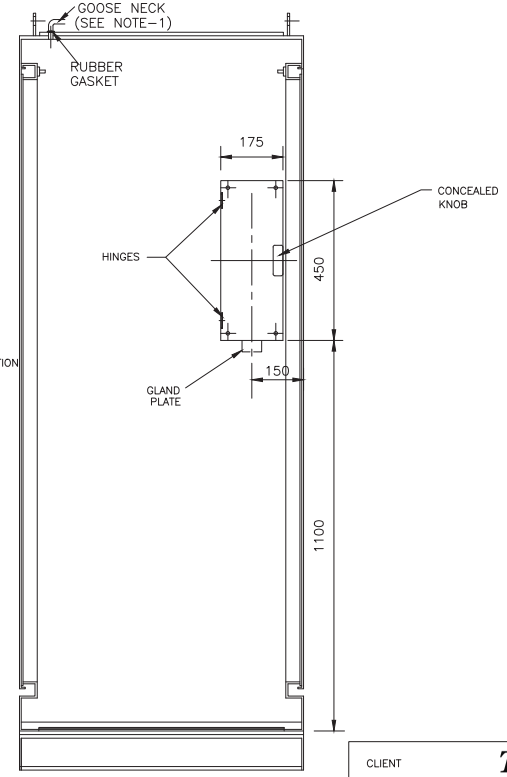

SIDE ELEVATION

LIE TYPE	MAX. NO. OF TRANSMITTERS	DIMENSION 'X' (mm)
A	6	1250
B	4	930
C	2	630

NOTES:–

1. TO BE PROVIDED FOR LIEs USED IN STEAM & WATER APPLICATION.
2. MATERIAL OF JBs FOR LIEs SHALL BE SAME AS THAT OF LIE.

FOR TENDER PURPOSE ONLY

This is part of Technical Specification No. PE-TS-475-155-A001

This document is the property of NATIONAL THERMAL POWER CORPORATION LTD.
No part of this document will be reproduced by any means without the written permission.

CLIENT **THDC INDIA LIMITED**
(A JOINT VENTURE OF GOVT. OF INDIA & GOVT. OF UP)

CONSULTANT **N T P C LIMITED**
(A GOVERNMENT OF INDIA ENTERPRISE)
ENGINEERING DIVISION

PROJECT: TYPICAL THERMAL POWER PROJECT
SG,TG, BOP PACKAGE

TITLE: TYPICAL GA OF LOCAL INSTRUMENT ENCLOSURE / RACK

REV.NO.	DESCRIPTION	DRAWN	DESIGN	CHKD.	M	E	C	C&I	ARCH.	APPD	DATE
A	FIRST ISSUE										26.04.06

CLEARED BY

SIZE	SCALE	DRG. NO.	REV. NO.
A2	N.T.S.	0000-999-POI-A-064	A

SHEET 01 OF 03

This is part of Technical Specification No. PE-TS-475-155-A001

This document is the property of NATIONAL THERMAL POWER CORPORATION LTD.
No part of this document will be reproduced by any means without the written permission.

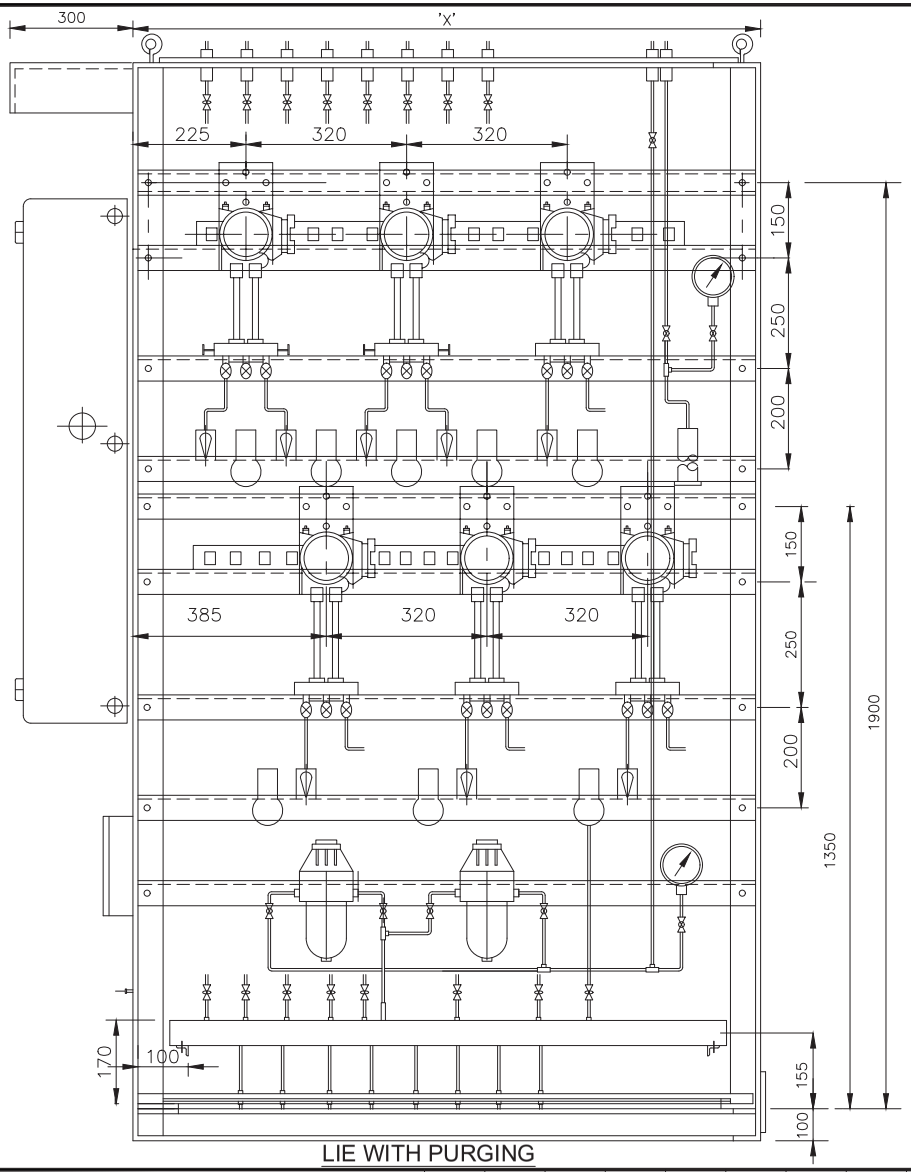

LIE WITH PURGING

LIR TYPE	MAX. NO. OF TRANSMITTERS	DIMENSION 'X' (mm)
A	6	1250
B	4	930

FOR TENDER PURPOSE ONLY

CLIENT **THDC INDIA LIMITED**
(A JOINT VENTURE OF GOVT. OF INDIA & GOVT. OF UP)

CONSULTANT **N T P C LIMITED**
(A GOVERNMENT OF INDIA ENTERPRISE)
ENGINEERING DIVISION

PROJECT: TYPICAL THERMAL POWER PROJECT
SG,TG,BOP PACKAGE

TITLE: TYPICAL GA OF LOCAL INSTRUMENT ENCLOSURE / RACK

REV.NO.	DESCRIPTION	DRAWN	DESIGN	CHKD.	M	E	C	C&I	ARCH.	APPD	DATE
D	FIRST ISSUE										22.08.02

CLEARED BY

SIZE	SCALE	DRG. NO.	REV. NO.
A3	N.T.S.	0000-999-POI-A-064 SH– 02 OF 03	D

CAD FILE NAME: C:\PC_MS\TYPTPP_SG,TG,BOP\0000-999-POI-A-064SH02rD.DWG

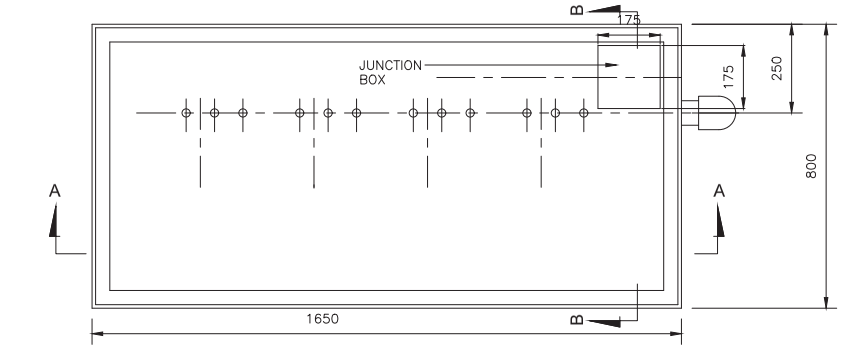

LIR TYPE	MAX. NO. OF TRANSMITTERS	DIMENSION 'X' (mm)
A	8	1650
B	6	1330
C	4	1010

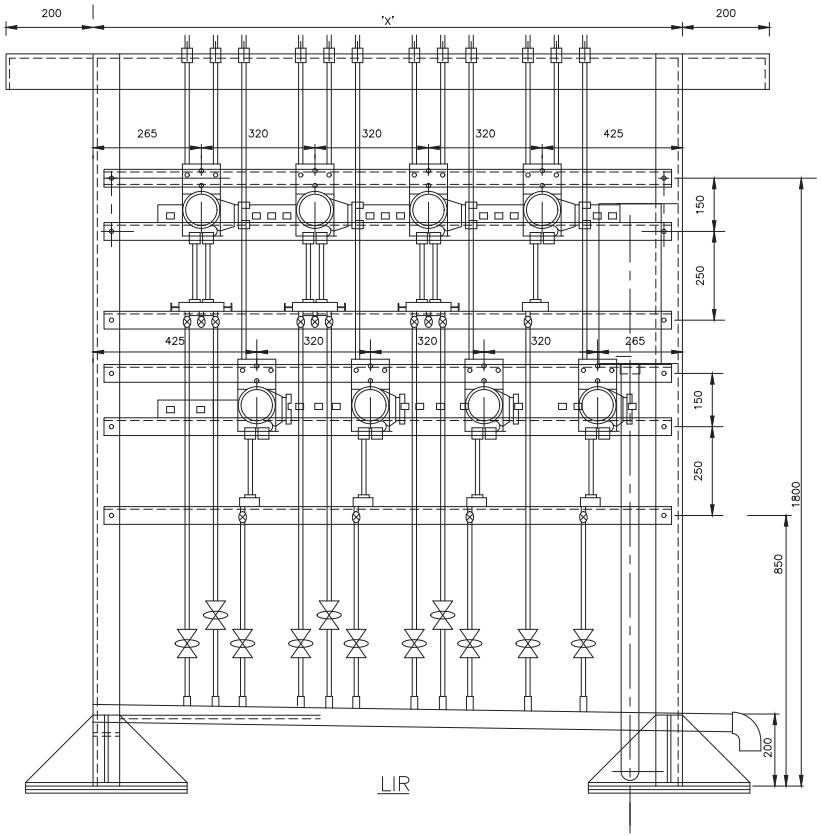

LIR

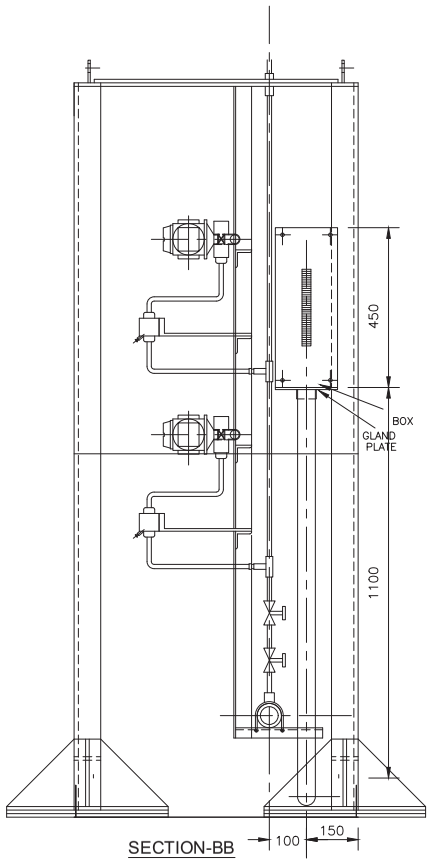

SECTION-BB

SECTION-AA
LIR WITHOUT PURGING

NOTE:–

1. MATERIAL OF JBs FOR LIRs SHALL BE SAME AS THAT OF LIR.

FOR TENDER PURPOSE ONLY

This document is the property of NATIONAL THERMAL POWER CORPORATION LTD.
No part of this document will be reproduced by any means without the written permission.

This is part of Technical Specification No. PE-TS-475-155-A001

REV.NO.	DESCRIPTION	DRAWN	DESIGN	CHKD.	M	E	C	C&I	ARCH.	APPD	DATE
A	FIRST ISSUE										26.04.06

CLEARED BY

CLIENT **THDC INDIA LIMITED**
(A JOINT VENTURE OF GOVT. OF INDIA & GOVT. OF UP)

CONSULTANT **N T P C LIMITED**
(A GOVERNMENT OF INDIA ENTERPRISE)
ENGINEERING DIVISION

PROJECT: TYPICAL THERMAL POWER PROJECT
SG,TG, BOP PACKAGE

TITLE: TYPICAL GA OF LOCAL INSTRUMENT ENCLOSURE / RACK

SIZE	SCALE	DRG. NO.	REV. NO.
A3	N.T.S.	0000-999-POI-A-064 SH– 03 OF 03	A

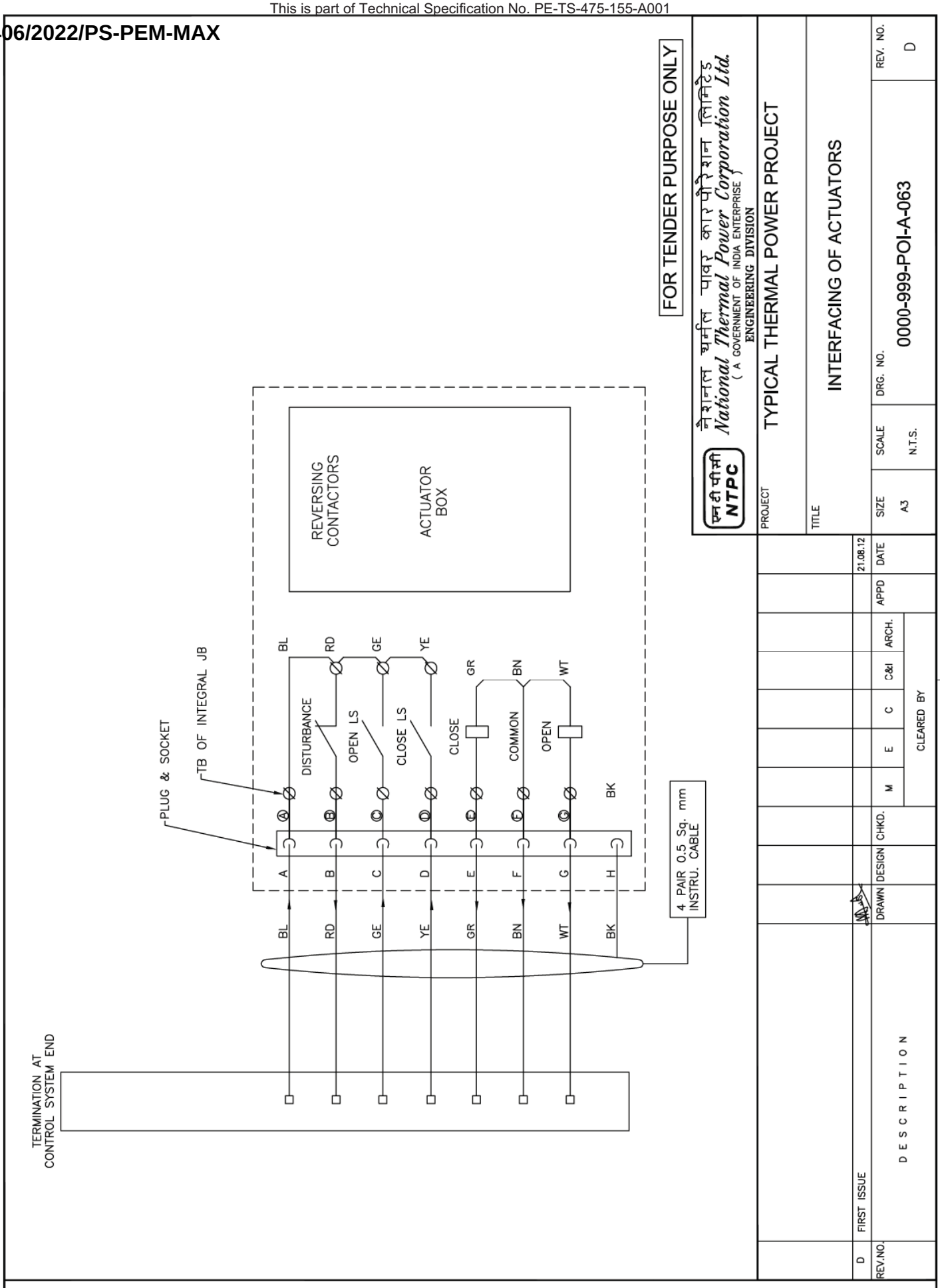

This document is the property of NATIONAL THERMAL POWER CORPORATION LTD.
No part of this document will be reproduced by any means without the written permission.

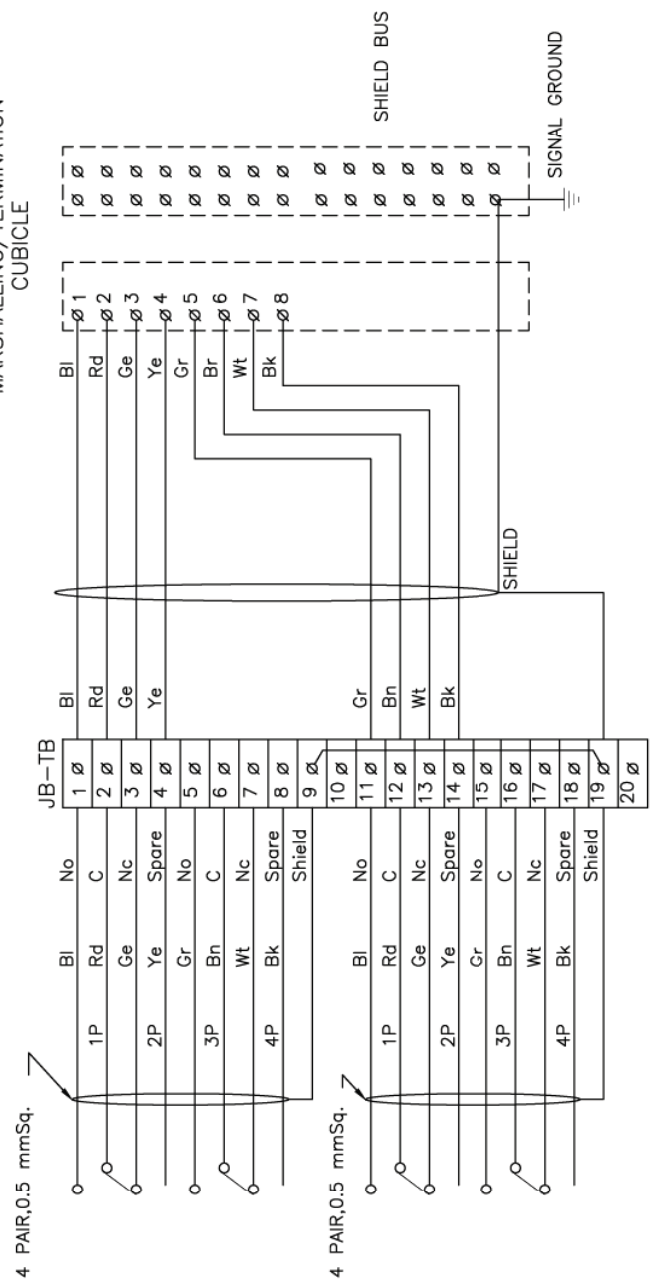

FOR TENDER PURPOSE ONLY

N T P C LIMITED
(A GOVERNMENT OF INDIA ENTERPRISE)
ENGINEERING DIVISION

एन टी पी सी NTPC

PROJECT: TYPICAL THERMAL POWER PROJECT

TITLE: INTERFACING OF FIELD INSTRUMENTS/ SWGR SWITCH (COC) TERMINATION DETAILS

SIZE	SCALE	DRG. NO.	REV. NO.
A3	NTS	0000-999-POI-A-065	A

SH 01 OF 15

REV.NO.	DESCRIPTION	DRAWN	DESIGN	CHKD.	M	E	C	C&I	ARCH.	APPD	DATE
A	FIRST ISSUE										21.08.12

CLEARED BY

This document is the property of NATIONAL THERMAL POWER CORPORATION LTD.
No part of this document will be reproduced by any means without the written permission.

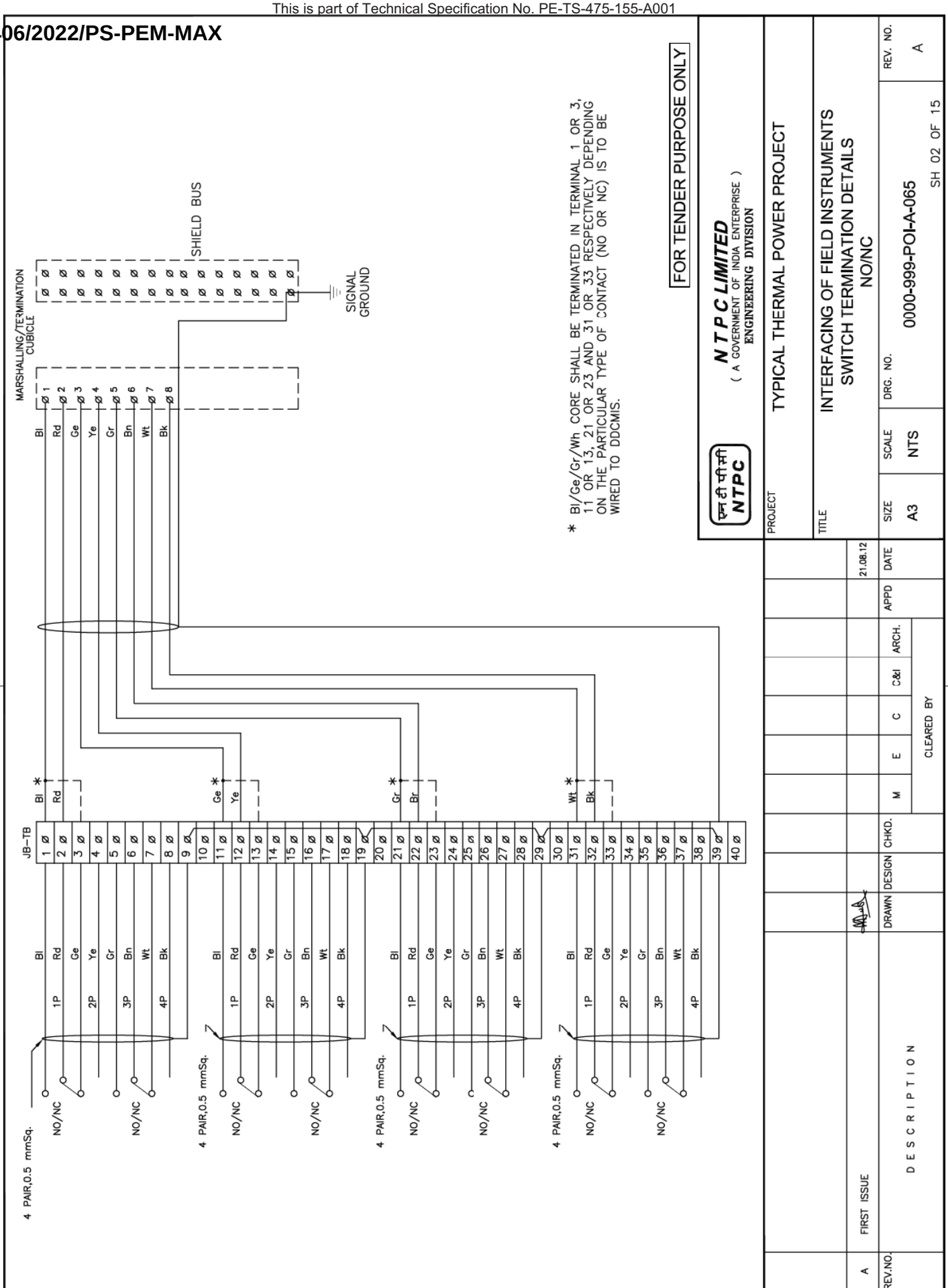

This document is the property of NATIONAL THERMAL POWER CORPORATION LTD.
No part of this document will be reproduced by any means without the written permission.

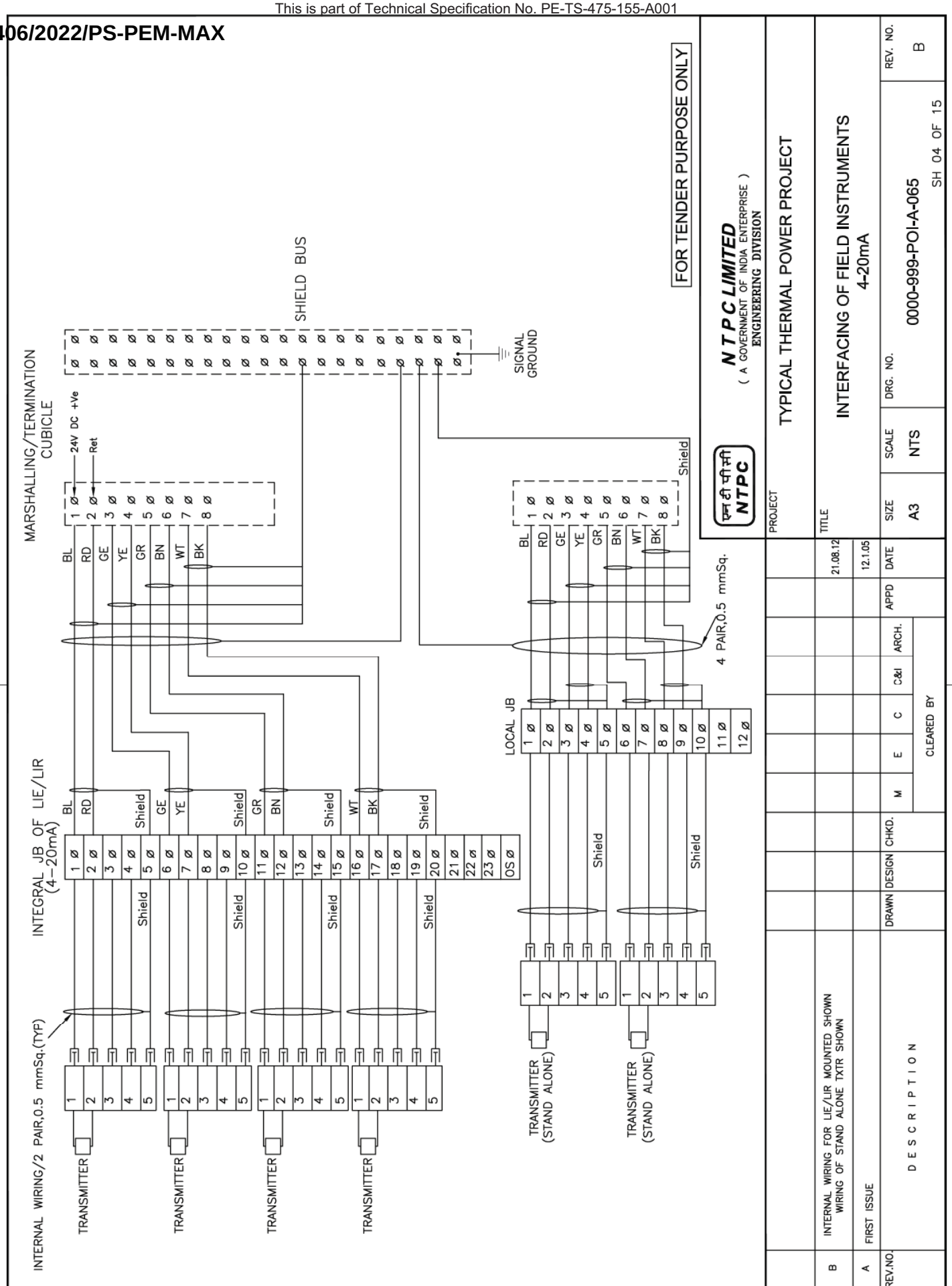

This document is the property of NATIONAL THERMAL POWER CORPORATION LTD.
No part of this document will be reproduced by any means without the written permission.

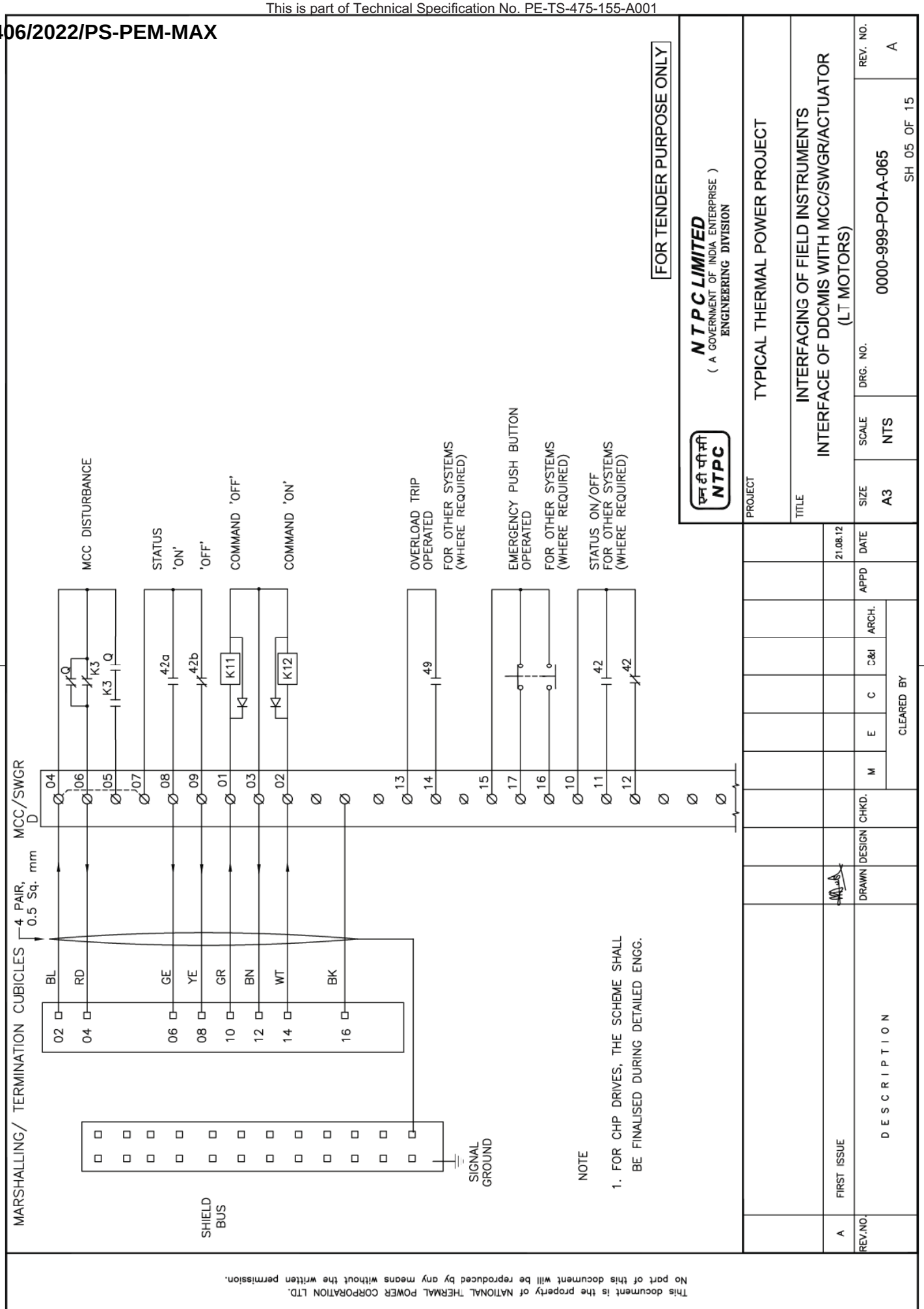

This document is the property of NATIONAL THERMAL POWER CORPORATION LTD.
No part of this document will be reproduced by any means without the written permission.

This is part of Technical Specification No. PE-TS-475-155-A001

This document is the property of NATIONAL THERMAL POWER CORPORATION LTD.
No part of this document will be reproduced by any means without the written permission.

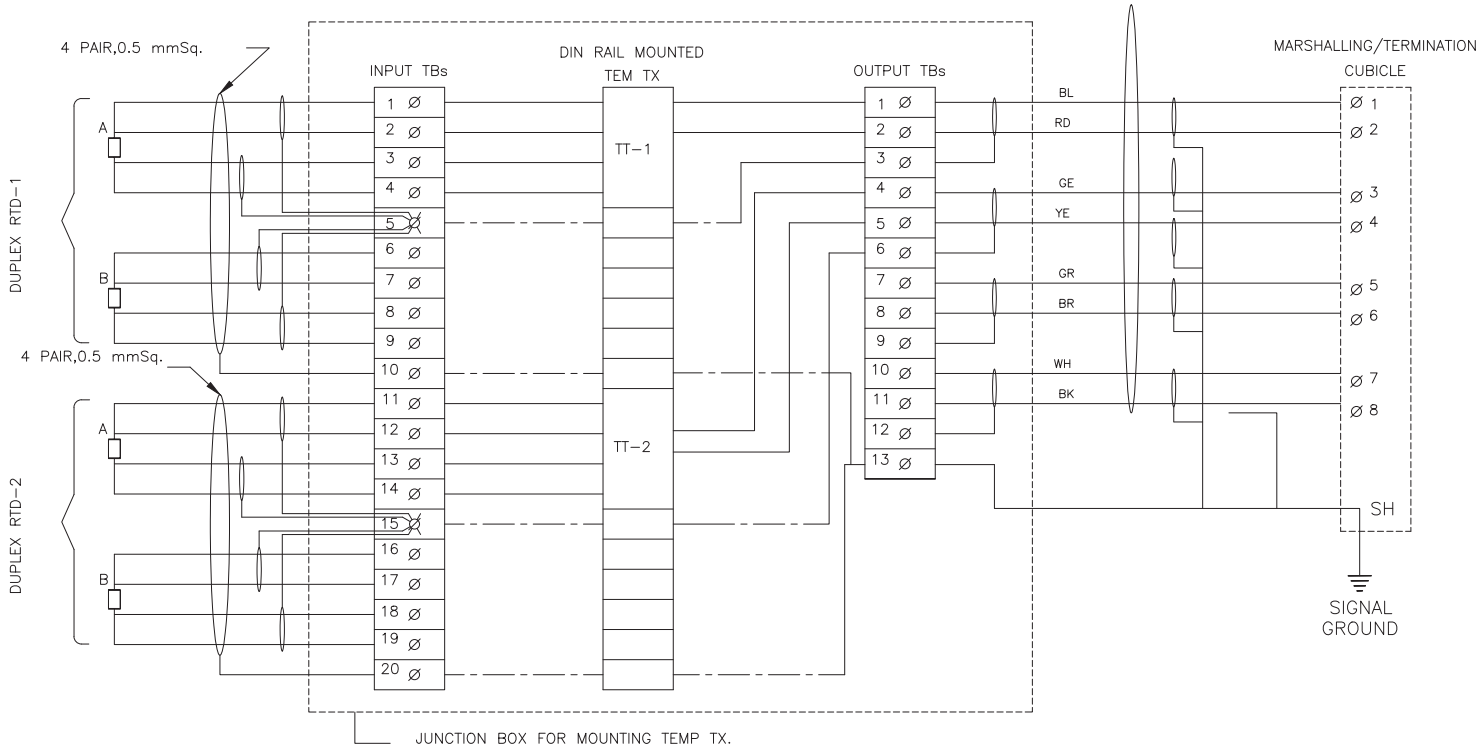

NOTE:

1. ABOVE IS THE TYP DRG. FOR DIN RAIL MOUNTED TEMP TRANSMITTERS FOR RTD APPLICATION. EXACT TYPE OF TEMP TRANSMITTER SHALL BE AS PER PART–A OF SPECIFICATION. FOR DUAL INPUT TRANSMITTER, BOTH ELEMENTS SHALL BE TERMINATED TO TT.
2. THE EXACT GROUPING OF TEMP TXs SHALL BE FINALISTED DURING DETAILED ENGG. STAGE.

FOR TENDER PURPOSE ONLY

CLIENT **THDC INDIA LIMITED**
(A JOINT VENTURE OF GOVT. OF INDIA & GOVT. OF UP)

CONSULTANT **N T P C LIMITED**
(A GOVERNMENT OF INDIA ENTERPRISE)
ENGINEERING DIVISION

PROJECT: TYPICAL THERMAL POWER PROJECT

TITLE: INTERFACING OF FIELD INSTRUMENTS
TYPICAL RTD CONNECTION WITH TEMP TRANSMITTERS INJBs

REV.NO.	DESCRIPTION	DRAWN	DESIGN	CHKD.	M	E	C	C&I	ARCH.	APPD	DATE
C	UPDATED										30.12.16
A	FIRST ISSUE										29.04.06
					CLEARED BY						

SIZE	SCALE	DRG. NO.	REV. NO.
A3	NTS	0000-999-POI-A-065 SH 06 OF 14	C

This is part of Technical Specification No. PE-TS-475-155-A001

This document is the property of NATIONAL THERMAL POWER CORPORATION LTD.
No part of this document will be reproduced by any means without the written permission.

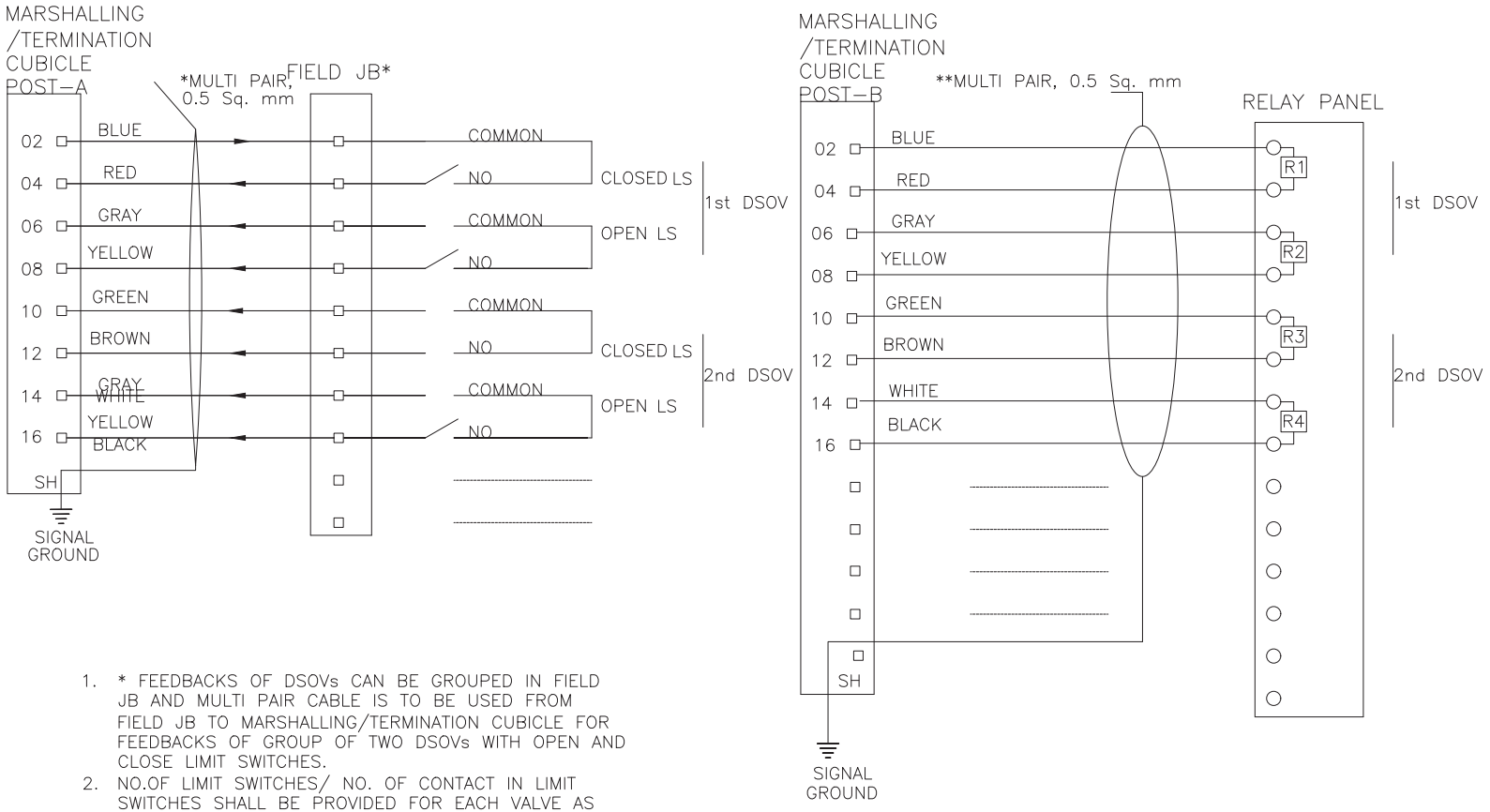

1. * FEEDBACKS OF DSOVs CAN BE GROUPED IN FIELD JB AND MULTI PAIR CABLE IS TO BE USED FROM FIELD JB TO MARSHALLING/TERMINATION CUBICLE FOR FEEDBACKS OF GROUP OF TWO DSOVs WITH OPEN AND CLOSE LIMIT SWITCHES.
2. NO.OF LIMIT SWITCHES/ NO. OF CONTACT IN LIMIT SWITCHES SHALL BE PROVIDED FOR EACH VALVE AS PER SPEC. REQUIREMENT/ PHILOSOPHY FOR RESPECTIVE SYSTEM.
3. ** MULTI PAIR CABLE IS TO BE USED FOR CONNECTION OF COMMAND OUTPUTS FROM MARSHALLING/ TERMINATION CUBICLE TO RELAY PANEL FOR A GROUP OF DSOVs.

CLIENT **THDC INDIA LIMITED**
(A JOINT VENTURE OF GOVT. OF INDIA & GOVT. OF UP)

CONSULTANT **N T P C LIMITED**
(A GOVERNMENT OF INDIA ENTERPRISE)
ENGINEERING DIVISION

PROJECT TYPICAL THERMAL POWER PROJECT

TITLE INTERFACING OF FIELD INSTRUMENTS
INTERFACE OF DDCMIS WITH MCC/SWGR/ACTUATOR
(DOUBLE COIL SOLENOID)

REV.NO.	DESCRIPTION	DRAWN	DESIGN	CHKD.	M	E	C	C&I	ARCH.	APPD	DATE
A	FIRST ISSUE										30.10.02

CLEARED BY

SIZE	SCALE	DRG. NO.	REV. NO.
A3	NTS	0000-999-POI-A-065 SH 09 OF 14	A

	C&I SPECIFICATION FOR CPU SYSTEM	SECTION: C SUB SECTION: C&I

INSTRUMENTATION CABLE INTERCONNECTION AND TERMINATION PHILOSOPHY

2.00.00 SPECIFICATION OF INSTRUMENTATION CABLE

2.01.00 Common Requirements

S. No.	Property	Requirement
1	Operating Voltage	225 V (peak value)
2.	Codes and standard	All instrumentation cables shall comply with VDE 0815, VDE 0207, Part 4, Part 5, Part 6, VDE 0816, VDE 0472, SEN 4241475, ANSI MC 96.1, IS-8784, IS-10810 (latest editions) and their amendments read along with this specification.
3.	Continuous operation suitability	At 205 Deg C for Type-C cables & heat resistant cables, at 70 Deg C for all other type of cables.

S. No.	Property	Requirement
4.	Marking :- a.Progressive automatic on-line sequential marking of length in meters to be provided at every one meter on outer sheath. b.Marking to read 'FRLS' to be provided at every 5 meters on outer sheath except for Type-C cable c.Durable marking at intervals not exceeding 625 mm shall include manufacturer's name, insulation material, conductor's size, number of pairs, voltage rating, type of cable, year of manufacturer to be provided on outer sheath.	
5.	Allowable Tolerance on overall diameter	+/- 2 mm (maximum) over the declared value in data sheet
6.	Variation in diameter	Not more than 1.0 mm throughout the length of cable.
7.	Ovality at any cross-section	Not more than 1.0 mm
8.	CAGE-CLAMP suitability	To be provided
9.	Color	The outer sheath shall be of blue color.
10.	Others	Repaired cables shall not be acceptable.

2.02.00 Specific Requirements

Specification Requirements	Type-A cable	Type-B cable	Type F & G cable	Type-C cable
A. CONDUCTORS				
Cross section area	0.5 sq. mm			
Conductor material	ANSI type KX	ANSI type SX	Annealed bare copper	ANSI type KX
Colour code	Yellow-Red	Black-Red	As per VDE-815	Yellow-Red
Conductor Grade	As per ANSI MC 96.1		Electrolytic	As per ANSI MC 96.1
No & dia of strands	7x0.3 mm (nom)			
No. of Pairs	2	2	2/4/8/12/16/24 / 48	2

Specification Requirements	Type-A cable	Type-B cable	Type F & G cable	Type-C cable
Max. conductor loop resistance per Km (in ohm) at 20 deg. C	As per ANSI MC 96.1		73.4	As per ANSI MC 96.1
Reference Standard	As per ANSI MC 96.1		VDE : 0815	As per ANSI MC 96.1
B. INSULATION				
Material	Extruded PVC type YI 3			Teflon (i.e. extruded FEP)
Thickness in mm (Min/Max)	0.25/0.35			0.4 / 0.50 (nominal)
Volume Resistivity (Min) in ohm-cm	1 x 10^{14} at 20 deg. C & 1x10^{11} at 70 deg. C.			2.8x 10^{14} at 20 deg. C & 2x10^{11} at 205 deg. C.
C. PAIRING & TWISTING				
Max. lay of pairs (mm)	50			
Single layer of binder tape on each pair provided	Each core printed with number or Numbered binder tape to be provided on each pair		Yes	Each core printed with number or Numbered binder tape to be provided on each pair
Bunch (Unit Formation) for more than 4P	N.A		To be provided	N.A
Conductor /pair identification as per VDE0815	N.A.		To be provided	N.A.
D. SHIELDING				
Type of shielding	Al-Mylar tape			
Individual pair shielding	No		To be provided for F-type cable	No
Minimum thickness of Individual pair shielding	No		0.028mm (28 micron)	No

Specification Requirements	Type-A cable	Type-B cable	Type F & G cable	Type-C cable
Overall cable assembly shielding	To be provided			
Minimum thickness of Overall cable assembly shielding	0.055 mm (55 micron)			
Coverage / Overlapping	100% / 20%			
Drain wire provided for individual shield	N.A.		Yes (for F-type) Size- 0.5 sqmm No of strands-7 Dia of strands- 0.3mm Annealed Tin coated copper	N.A.
Drain wire provided for overall shield	Yes, Size- 0.5 sqmm,No of strands-7,Dia of strands-0.3mm,Annealed Tin coated copper			
E. FILLERS (if applicable)				
Non-hygroscopic, flame retardant	To be provided			
F. OUTER SHEATH				
Material	Extruded PVC compound YM1 with FRLS properties			Teflon (i.e. extruded FRP)
Minimum Thickness at any point	1.8 mm			0.4 mm
Nominal Thickness at any point	>1.8 mm			0.5 mm
Resistant to water, fungus, termite & rodent attack	Required			
Minimum Oxygen index as per ASTMD-2863	29 %			N.A.
Minimum Temperature index as per ASTMD-2863	250 deg.C			N.A.

Specification Requirements	Type-A cable	Type-B cable	Type F & G cable	Type-C cable
Maximum Acid gas generation by weight as per IEC-60754-1	20%			N.A.
Maximum Smoke Density Rating as per ASTMD-2843	60% (defined as the average area under the curve when the results of smoke density test plotted on a curve indicating light absorption vs. time as per ASTMD-2843)			N.A.
Reference standard	VDE207 Part 5,VDE-816			VDE207 Part 6 ASTM D2116
G. Electrical Parameters				
Mutual Capacitance Between Conductors At 0.8 Khz (Max.)	200 nF/km		120 nF/km for F type 100 nF/km for G-type	200 nF/km
Insulation Resistance (Min.)	100 M Ohm/Km			
Cross Talk Figure (Min.) At 0.8 Khz	60 dB		60 dB	60dB
Characteristic Impedance (Max) At 1 Khz	N.A.		320 OHM FOR F-TYPE 340 OHM FOR G-TYPE	N.A.
Attenuation Figure At 1 Khz (Max)	N.A.		1.2 db/km	N.A.
H. COMPLETE CABLE				
Complete Cable assembly	Shall pass Swedish Chimney test as per SEN-SS 4241475 class F3.			N.A.

Specification Requirements	Type-A cable	Type-B cable	Type F & G cable	Type-C cable
Flammability	Shall pass flammability as per IEEE-383 read in conjunction to this specification			As per manufacturer's standard subject to employer's approval
I. CABLE DRUM				
Type	Non-returnable wooden drum (wooden drum to be constructed from seasoned wood free from defects with wood preservative applied to entire drum) or steel drum.			
Length	1000 m ± 5% for up to & including 12 pairs 500 m ± 5% for above12 pairs			

Note: Heat resistant instrumentation cable shall have same specification as of G/F type instrumentation cable as specified above, except that insulation and outer sheath material shall be Teflon and cable shall be suitable for continuous operation at 205 Deg. C

3.07.00 Penetration of water resistance and impact resistance shall be as per IEC standard.

4.00.00 SPCIFICATION OF CONTROL & POWER SUPPLY CABLES

Refer Electrical sub-sections

5.00.00 INSTRUMENTATION CABLE INTERCONNECTION AND TERMINATION PHILOSOPHY

The cable interconnection philosophy to be adopted shall be such that extensive grouping of signals by large scale use of field mounted Group Junction Boxes (JBs) at strategic locations (where large concentration of signals are available, e.g. valves limit & torque switches, switchgear) is done and consequently cable with higher number of pairs are extensively used. The details of termination to be followed are mentioned in the given Table A.

TABLE A: CABLE TERMINATION TO BE FOLLOWED

Application		Type Of Termination		Type Of Cable
FROM (A)	**TO (B)**	**END A**	**END B**	
Valves/dampers drives (Integral Junction box)	Marshalling / Marshalling – cum Termination Cubicle / local group JB	Plug in connector	Post mount cage clamp type.	G
Transmitters, Process Actuated switches mounted in LIE/LIR	Integral Junction box of LIE/LIR	Plug in connector	Cage clamp (Rail mount) type.	F,G
RTD heads	Local junction box	Plug in connector	Cage clamp (Rail mount) type.	F
Thermocouple	Local junction box / CJC box (if applicable)	Plug in connector	Cage clamp (Rail mount) type.	A, B, C*
Other Field mounted Instrument	Local JB / Group JB	Plug in connector	Cage clamp (Rail mount) type.	F,G
RTD	Temperature transmitter	Plug in connector	Screwed, Cage clamp type	F
Thermocouple	Temperature transmitter	Plug in connector	Screwed, Cage clamp type	A, B, C*

Application		Type Of Termination		Type Of Cable
FROM (A)	**TO (B)**	**END A**	**END B**	
Local Junction box, Temperature Transmitter, Int. Junction box of LIE/ LIR/ MCC/SWGR	Group JB	Cage clamp (Rail mount) type.	Cage clamp (Rail mount) type.	F,G
Local Junction box, Temperature Transmitter, Int. Junction box of LIE/ LIR/ Group JB / MCC/SWGR	Marshalling / Marshalling – cum Termination Cubicle	Cage clamp (Rail mount) type.	Cage clamp (Post mounted) type.	F,G
Marshalling cubicle/ Termination Cabinet	Electronic system cabinet	Cage clamp (Post mounted) type.	Plug-in connector / other system as per Mfr.'s Standard	Internal wiring
Marshalling/ Termination System Cabinets	UCD mounted equipments	Cage clamp (Post mounted) type.	Plug in connector / Cage clamp type (rail mounted).	F,G (with plug-in connector at one end)
DDCMIS/PLC cabinets	PC, Printers etc.	Plug in connector	Plug in connector	Mfr.'s Standard

Notes

1 Normally 10% spare cores shall be provided when the numbers of pairs of cables are more than four pairs, except for pre-fabricated cables which shall be as per manufacturer's standard.

2 For analog signals, individual pair shielding & overall shielding & for Binary signals, only overall shielding of instrumentation cables shall be provided.

3 * For high temperature applications only.

4 For Cable type and cable termination scheme for the instruments/ equipment that are connected to Steam Turbine and Generator (STG) control system defined at Part A, sub section IIC, clause no. 2.03.01 (a) (ii) above and hydrogen generation plant auxiliaries system, Contractor's standard and proven practice is also acceptable. However, for termination of instrumentation cable at marshalling cabinets/DCS panel end, cage-clamp termination shall be offered. For power and control cable termination, Contractor's standard and proven practice would be acceptable.

6.00.00	**TERMINAL BLOCKS**
6.01.00	All terminal blocks shall be rail mounted/post mounted, cage clamp type with high quality non-flammable insulating material of melamine suitable for working temperature of 105 deg. C. The terminal blocks in field mounted junction boxes, temperature transmitters, instrument enclosures/racks, etc., shall be suitable for cage clamp connections. The terminal blocks in Control Equipment Room logic/termination/marshalling cubicles shall be suitable for post mounted cage clamp connection at the field input end. The exact type of terminal blocks to be provided by the Bidder and the technical details of the same including width etc. shall be subject to Employer's approval.
6.02.00	All the terminal blocks shall be provided complete with all required accessories including assembly rail, locking pin and section, end brackets, partitions, small partitions, transparent covers, support brackets, distance sleeves, warning label, marking, etc.
6.03.00	The marking on terminal strips shall correspond to the terminal numbering on wiring diagrams. At least 20% spare unused terminals shall be provided everywhere including local junction boxes, instrument racks/enclosures, termination/marshalling cabinets, etc. All terminal blocks shall be numbered for identification and grouped according to the function. Engraved labels shall be provided on the terminal blocks.
6.04.00	For terminating each process actuated switches, drive actuators, control valves, Thermocouple, RTD, etc. in Local Junction Boxes, etc, refer Drg no. 0000-999-POI-A-065.

6.05.00	The terminal blocks shall be arranged with at least 100 mm clearance between two sets of terminal blocks and between terminal blocks and junction box walls.
7.00.00	**INTERNAL PANELS/ SYSTEM CABINETS WIRING**
7.01.00	Internal panel/cabinet wiring shall be of multi-stranded copper conductor with FRLS PVC insulation without shield and outer sheath meeting the requirements of VDE 0815.
7.02.00	All internal wires shall be provided with tag and identification nos. etched on tightly fitted ferules at both ends. All wires directly connected to trip devices shall be distinguished by one additional red colour ferrule.
7.03.00	All external connection shall be made with one wire per termination point. Wires shall not be tapped or spliced between terminal points.
7.04.00	All floor slots of desk/panels/cabinets used for cable entrance shall be provided with removable gasketed gland plates and sealing material. Split type grommets shall be used for prefabricated cables.
7.05.00	All the special tools as may be required for solder less connections shall be provided by Bidder.
7.06.00	Wire sizes to be utilised for internal wiring.

(i)	Current (4-20 mA), low voltage signals (48V); Ammeter/Voltmeter circuit, control switches etc. for electrical system.	0.5 Sq.mm.
(ii)	Power supply and internal illumination.	2.5Sq.mm. minimum (shall be as per load requirement.)

10.00.00	**FIELD MOUNTED LOCAL JUNCTION BOXES**		
	(i)	No. of ways	12/24/36/48/64/72/96/128 with 20% spares terminals.
	(ii)	Material and Thickness	4mm thick Fiberglass Reinforced Polyester (FRP).
	(iii)	Type	Screwed at all four corners for door. Door gasket shall be of synthetic rubber.

(iv)	Mounting clamps and accessories	Suitable for mounting on walls, columns, structures etc. The brackets, bolts, nuts, screws, glands required for erection shall be of SS, included in Bidders scope of supply.
(v)	Type of terminal blocks	Rail mounted cage-clamp type suitable for conductor size upto 2.5 mm^2. A M6 earthing stud shall be provided.
(vi)	Protection Class	IP: 55 minimum for indoor & IP-65 minimum for outdoor applications.
(vii)	Grounding	To be provided.
(viii)	Color	RAL 7035

Note : For solenoid valve box, the material for the enclosure shall be of steel plate (SS304) with minimum 2 mm thick frame and minimum 2 mm thick steel (SS-304) sheet. Provision of individual isolation for each solenoid shall be provided inside the box. Minimum 100 mm space between the solenoids shall be ensured for ease of access and maintenance. All other specifications shall be as per above.

11.00.00 CONDUITS

11.01.00 Conduits shall be generally used for interconnecting cables from field instruments to Local JB's. All rigid conduits, couplings and elbows shall be hot dipped galvanised rigid mild steel in accordance with IS: 9537 Part-I (1980) and Part-II (1981). The conduit interior and exterior surfaces shall have continuous zinc coating with an overcoat of transparent enamel lacker or zinc chromate. Flexible conduit shall be heat resistant terne coated steel with , water leak, fire and rust proof protected for the areas of Mills,Drum, Main Steam, RH steam Air Heaters and Furnace, BFPDT's .

And for remaining applications, water leak, fire and rust proof flexible GI conduits shall be provided. The temperature rating of flexible conduit shall be suitable for actual application.

11.02.00 All rigid conduit fittings shall conform to the requirements of IS: 2667, 1976. Galvanized steel fitting shall be used with steel conduit. All flexible conduit fittings shall be liquid tight, galvanized steel. The end fittings shall be compatible with the flexible conduit supplied.

11.03.00 Conduit sealing, explosion proof, dust proof and other types of special fittings shall be provided as required by these specifications and shall be consistent with the area and equipment with which they are installed. Fittings installed outdoors and in damp locations shall be sealed and gasketed. Hazardous area fittings and conduits sealing shall conform with NEC requirements for the area classification.

11.04.00 Contractor shall provide double locknuts on all conduit terminations not provided with threaded hubs and couplings. Water tight conduit unions and rain tight conduit hubs shall be utilised for all the application which shall be exposed to weather. Moisture pockets shall be eliminated from conduits.

11.05.00 Conduits shall be securely fastened to all boxes and cabinets.

	C&I SPECIFICATION FOR CPU SYSTEM	SECTION: C SUB SECTION: C&I

QUALITY ASSURANCE

MEASURING INSTRUMENTS (PRIMARY AND SECONDARY) Page- 1/2

TESTS / ITEMS	Dimensions (R)	Make, Model, Type, Rating (R)	Process / Electrical connection (R)	Calibration (R)	Test as per standard(R)	Insulation Resistance (R)	IBR Certification (if applicable)(R)	Hydro Test(R)	Material Test certificate ®
1. PR Gauge (IS-3624)	Y	Y	Y	Y	Y				
2. Temp. Gauge (BS-5235)	Y	Y	Y	Y	Y				
3. Pr./D.P.Switch(BS-6134)	Y	Y	Y	Y	Y	Y			
4. Electronic Transmitter(IEC-60770)	Y	Y	Y	Y	Y	Y			
5. Temp. Switch	Y	Y	Y	Y	Y	Y			
6. Recorder(IS-9319/ANSI C-39.4)	Y	Y	Y	Y	Y	Y			
7. Vertical indicators	Y	Y	Y	Y		Y			
8. Digital Indicators	Y	Y	Y	Y		Y			
9. Integrators	Y	Y	Y	Y					
10. Electrical Metering Instrument (IS-1248)	Y	Y	Y	Y	Y	Y			
11. Transducer (IEC-688)	Y	Y	Y	Y	Y	Y			
12. Thermocouples (IEC – 754 / ANSI-MC-96.1)	Y	Y	Y	Y	Y	Y			
13. RTD(IEC-751)	Y	Y	Y	Y	Y	Y			
14. Thermowell	Y		Y				Y	Y	Y

R-Routine Test A- Acceptance Test Y – Test applicable

: Note: **1)** This is an indicative list of tests/checks. The manufacturer is to furnish a detailed quality plan indicating the Practices and Procedure adopted along with relevant supporting documents.

MEASURING INSTRUMENTS (PRIMARY AND SECONDARY) Page- 2/2

TESTS / ITEMS	Dimensions (R)	Make, Model, Type, Rating (R)	Process / Electrical connection (R)	Calibration (R)	Requirement as per standard (R)	WPS approval (A)	Non-destructive testing (R)	Calculation for accuracy (R)	Insulation Resistance (R)	IBR Certification as applicable (R)	Hydro test (R)	Material test certificate (A)
15. Cold junction compensation box	Y	Y	Y	Y					Y			
16. Orifice plate(BS-1042)	Y	Y	Y	Y *	Y	Y **	Y **			Y	Y **	Y
17. Flow nozzle(BS-1042)	Y	Y	Y	Y *	Y	Y	Y			Y	Y	Y
18. Impact head type element	Y	Y	Y					Y				Y
19. Level transmitter/float type switch	Y	Y	Y	Y					Y	Y	Y	Y
20. Analysers	Y	Y	Y	Y								
21. Dust emission monitors	Y	Y	Y	Y								
*Calibration to be carried out on one flow element of each type and size if calibration carried out as type test same shall not be repeated.												
** If applicable												

R-Routine Test A- Acceptance Test Y – Test applicable

Note: 1) This is an indicative list of tests/checks. The manufacturer is to furnish a detailed quality plan indicating the Practices and Procedure adopted along with relevant supporting documents.

PROCESS CONNECTION & PIPING

TESTS / ITEMS	Visual ®	GA, BOM, Layout of component & construction feature®	Dimension ®	Paint Shade/thickness ®	Flattening,flaring,hydrotest,hardness check as per ASTM standard (A)	Component Ratings ®	Wiring ®	Make, Model, Type, Rating®	IR & HV ®	Review of TC for instrument/devices (R)	Accessability of TBs/Devices ®	Illumination,grounding ®	Tubing ®	Leak/Hydro test(A)	Chemical/physical properties of material (A)	Proof pressure test,Dismantling & reassembly test,Hydrulic impulse and vibration test (R)	Tests as per standards & specification
Local Instrument enclosure Y Y Y	Y	Y Y Y	Y Y	Y Y Y	Y												
Local instruments racks Y Y Y Y	Y Y	Y Y Y	Y Y	Y Y													
Junction Box Y Y Y Y* Y Y Y																	
Gauge Board Y Y Y Y Y Y Y Y	Y																
Impulse pipes and tubes Y Y Y	Y	Y															
Socket weld fittings ANSI B-16.11	Y	Y Y		Y Y													
Compression fittings Y Y Y	Y Y	Y															
Instrument valves & Valve manifolds	Y	Y Y		Y Y													
Copper tubings ASTM B75 Y	Y	Y															

*-applicable for painted junction boxes.

Note: R-Routine Test A- Acceptance Test Y – Test applicable

Note: This is an indicative list of tests/checks. The manufacturer is to furnish a detailed quality plan indicating the Practices and Procedure adopted alongwith relevant supporting documents.

CLAUSE NO.

QUALITY ASSURANCE

INSTRUMENTATION CABLE

TESTS / ITEMS	Conductor Resistance ® & (A)	High Voltage ® & (A)	Insulation Resistance ® & (A)	Constructional detail, dimensions (A)	Outer-Sheathe/core marking, end sealing (A)	Thermal Stability (A) +	Visual, Surface finish (A) +	Electrical Parameters ** (A) +	Persulphate Test (A) +	Overall/Coverage/Continuity (A)	Swidesh chimney Test (SS-4241475) (A) ++	FRLS Test * (A) ++	Tensile & Elongation before & after aging (A) ++	Vol. Resistivity. at room & Elevated Temp. (A) ++	Spark test report review ®
1. Instrument cable twisted and shielded															
Conductor(IS-8130)	Y			Y			Y								
Insulation(VDE-207)				Y	Y	Y	Y						Y		Y
Pairing/Twisting				Y	Y		Y								
Shielding				Y			Y			Y					
Drain wire	Y			Y			Y		Y	Y					
Inner Sheath				Y	Y	Y	Y					Y	Y		
Outer Sheath				Y	Y	Y	Y					Y	Y		
Over all cable	Y	Y	Y	Y	Y		Y	Y			Y			Y	
Cable Drums(IS-10418)				Y			Y								

Note : High Temp. cables shall be subjected to tests as per VDE-207(Part-6) Compensating cables shall be checked for Thermal EMF/Endurance test as per IS 8784.

Note : This is an indicative list of tests/checks. The manufacture is to furnish a detailed Quality Plan indicating his practice & Procedure along with relevant supporting documents during QP finalization for all items.

Note : ® - Routine Test A - Acceptance Test Y - Test Applicable

Note : Sampling Plan for Acceptance test shall be as per IS 8784 (As applicable)

- * FRLS Tests: Oxygen / Temp Index (ASTM D-2863), Smoke Density Rating (ASTM – D 2843), HCL Emission (IEC-754-1)
- ** Characteristic Impedance, Attenuation, Mutual Capacitance, Cross Talk (As applicable)

\+ Sample size will be One No. of each size/type per lot.

++ Sample size will be One No. sample for complete lot offered irrespective of size/type.

CLAUSE NO.

QUALITY ASSURNACE & INSPECTION

ELECTRICAL ACTUATOR WITH INTEGRAL STARTER

Test/Attributes Characteristics / ITEM/ COPONENT/ SUB SYSTEM ASSEMBLY/ TESTING	RPM ®	No Load Current ®	IR & HV Test®	Mounting Dimension®	All routine Test as per Standard & Specification®	Correct Phase Sequence®	Operation & Setting of limit Switch/Torque Switch®	Stall Torque/Current (A)	Hand Wheel operation/ Auto de clutch function (A)	Function of Aux. like Potentiometer, space heater, position	EPT output ®	Grease leakage ®	Local/ Remote (Open-Stop-Close) Operation® Safety check (Single phasing, Phase correction, Tripping etc.) (A)
ELECTRICAL ACTUATOR WITH INTEGRAL STARTER(IS_9334)													
Motor	Y	Y	Y	Y	Y								
Final Testing	Y	Y	Y	Y	Y	Y	Y	Y	Y	Y	Y	Y	Y

Note: 1) Detailed procedure of Burn-in and Elevated Temperature test shall be as per Quality Assurance Programme in General Technical Conditions

2) This is an indicative list of tests/checks. The manufacturer is to furnish a detailed quality plan indicating the practices and procedure adopted along with relevant supporting documents.

® - Routine Test (A) - Acceptance Test Y - Test applicable

	C&I SPECIFICATION FOR CPU SYSTEM	SECTION: C SUB SECTION: C&I

TYPE TEST REQUIREMENT

CLAUSE NO.	TECHNICAL REQUIREMENTS
1.00.00	**TYPE TEST REQUIREMENTS**
1.01.00	General Requirements
1.01.01	The Contractor shall furnish the type test reports of all type tests as per relevant standards and codes as well as other specific tests indicated in this specification. If the bidder proposes a different standard/code from that indicated at table 3.00.00, same is acceptable provided the equivalence of the proposed standard is established by the bidder. A list of such tests are given for various equipment in table titled 'TYPE TEST REQUIREMENT FOR C&I SYSTEMS' at the end of this chapter and under the item Special Requirement for Solid State Equipments/Systems. For the balance equipment instrument, type tests may be conducted as per manufactures standard or if required by relevant standard. (a) Out of the tests listed, the Bidder/ sub-vendor/ manufacturer is required to conduct certain type tests specifically for this contract (and witnessed by Employer or his authorized representative) even if the same had been conducted earlier, as clearly indicated subsequently against such tests. (b) For the rest, submission of type test results and certificate shall be acceptable provided. i. The same has been carried out by the Bidder/ sub-vendor on exactly the same model /rating of equipment. ii. There has been no change in the components from the offered equipment & tested equipment. iii. The test has been carried out as per the latest standards alongwith amendments as on the date of Bid opening. (c) In case the approved equipment is different from the one on which the type test had been conducted earlier or any of the above grounds, then the tests have to be repeated and the cost of such tests shall be borne by the Bidder/ sub-vendor within the quoted price and no extra cost will be payable by the Employer on this account.
1.01.02	As mentioned against certain items, the test certificates for some of the items shall be reviewed and approved by the main Bidder or his authorized representative and the balance have to be approved by the Employer.
1.01.03	The schedule of conduction of type tests/ submission of reports shall be submitted and finalized during pre-award discussion.
1.01.04	For the type tests to be conducted, Contractor shall submit detailed test procedure for approval by Employer. This shall clearly specify test setup, instruments to be used, procedure, acceptance norms (wherever applicable), recording of different parameters, interval of recording precautions to be taken etc. for the tests to be carried out.
1.01.05	The Bidder shall indicate in the relevant BPS schedule, the cost of the type test for each item only for which type tests are to be conducted specifically for this project. The cost shall only be payable after conduction of the respective type test in presence of authorize representative of Employer. If a test is waived off, then the cost shall not be payable.

CLAUSE NO.	TECHNICAL REQUIREMENTS

2.00.00 **SPECIAL REQUIREMENT FOR SOLID STATE EQUIPMENTS/ SYSTEMS**

2.01.00 The minimum type test reports, over and above the requirements of above clause, which are to be submitted for each of the major C&I systems shall be as indicated below:

i) Surge Withstand Capability (SWC) for Solid State Equipments/ Systems

All solid state systems/ equipments shall be able to withstand the electrical noise and surges as encountered in actual service conditions and inherent in a power plant. All the solid state systems/ equipments shall be provided with all required protections that needs the surge withstand capability as defined in ANSI 37.90.1/ IEEE-472. Hence, all front end cards which receive external signals like Analog input & output modules, Binary input & output modules etc. including power supply, data highway, data links shall be provided with protections that meets the surge withstand capability as defined in ANSI 37.90.1/ IEEE-472. Complete details of the features incorporated in electronics systems to meet this requirement, the relevant tests carried out, the test certificates etc. shall be submitted along with the proposal. As an alternative to above, suitable class of EN 61000-4-12 which is equivalent to ANSI 37.90.1/ IEEE-472 may also be adopted for SWC test.

ii) Dry Heat test as per IEC-68-2-2 or equivalent.

iii) Damp Heat test as per IEC-68-2-3 or equivalent.

iv) Vibration test as per IEC-68-2-6 or equivalent.

v) Electrostatic discharge tests as per EN 61000-4-2 or equivalent.

vi) Radio frequency immunity test as per EN 61000-4-6 or equivalent.

vii) Electromagnetic Field immunity as per EN 61000-4-3 or equivalent.

Test listed at item no. v, vi, vii, above are applicable for electronic cards only as defined under item (i) above.

3.00.00

TYPE TEST REQUIREMENT FOR C&I SYSTEMS

Sl. No	Item	Test Requirement	Standard	Test To Be Specifically Conducted	NTPC's Approval Req. On Test Certificate
Col 1	Col 2	Col 3	Col 4	Col 5	Col 6
1	Elect. Metering instruments	As per standard (col 4)	IS-1248	No	No
2	Transducers	As per standard (col 4)	IEC-60688,IS12784	No	No
3	Thermocouple	Degree of protection test	IS-13947	No	No
4	RTD	As per standard (col 4)	IEC-60751	No	No
5	Electronic transmitter	As per standard (col 4)	BS-6447 / IEC-60770	No	No
6	E/P converter	As per standard (col 4)	Mfr. standard	No	No
7	Dust emission monitor	Degree of protection test	IS-13947	No	No
8	Instrumentation Cables Twisted & Shielded*				
	-Conductor	Resistance test	VDE-0815	No	No
		Diameter test	IS-10810	No	No
		Tin Coating test (Persul-phate test)	IS-8130	No	No
	-Insulation	Loss of mass	VDE 0472	No	No
		Ageing in air ovens**	VDE 0472	No	No
		Tensile strength and	VDE 0472	No	No

		elongation test before and after ageing**			
		Heat shock	VDE 0472	No	No
		Hot deformation	VDE 0472	No	No
		Shrinkage	VDE 0472	No	No
		Bleeding & blooming	IS-10810	No	No
	-Inner sheath***	Loss of mass	VDE 0472	No	No
		Heat shock	VDE 0472	No	No
		Cold bend/ cold impact test	VDE 0472	No	No
		Hot deformation	VDE 0472	No	No
		Shrinkage	VDE 0472	No	No
	-Outer sheath	Loss of mass	VDE 0472	No	No
		Ageing in air ovens**	VDE 0472	No	No
		Tensile strength and elongation test before and after ageing**	VDE 0472	No	No
		Heat shock	VDE 0472	No	No
		Hot deformation	VDE 0472	No	No
		Shrinkage	VDE 0472	No	No
		Bleeding & blooming	IS-10810	No	No
		Colour fastness to water	IS-5831	No	No
		Cold bend/ cold impact test	VDE-0472	No	No

		Oxygen index test	ASTMD-2863	No	No
		Smoke Density Test	ASTMD-2843	No	No
		Acid gas generation test	IEC-60754-1	No	No
	-fillers	Oxygen index test	ASTMD-2863	No	No
		Acid gas generation test	IEC-60754-1	No	No
	-AL-MYLAR shield	Continuity test		No	No
		Shield thickness		No	No
		Overlap test		No	No
	-Over all cable	Flammability Test	IEEE 383	No	No
		Swedish Chimney Test	SEN 4241475	No	No
		Noise interference	IEEE Trans-actions	No	No
		Dimensional checks	IS 10810	No	No
		Cross talk	VDE-0472	No	No
		Mutual capacitance	VDE-0472	No	No
		HV test	VDE-0815	No	No
		Drain wire continuity		No	No

* 1.0 All cables to be supplied shall be of type tested quality. The Contractor shall submit for Owner's approval the reports of all the type tests as listed in this specification and carried out within last Ten years from the date of bid opening. These reports should be for the tests conducted on the equipment similar to those proposed to be supplied under this contract and the test(s) should have been either conducted at an independent laboratory or should have been witnessed by a client.

2.0 In case the Contractor is not able to submit report of the type test(s) conducted within last Ten years from the date of bid opening, or in case the type test report(s) are not found to be meeting the specification requirements, the Contractor shall conduct all such tests either in an independent laboratory or at manufacturer's works in presence of Owner's representative under this contract free of cost to the Owner and submit the reports for approval.

**These tests shall be carried out as per VDE0207 Part 6 & ASTMD-2116 for TEFLON insulated & outer sheathed cables

***Applicable for armoured cables only

9 DC Power Supply System (Applicable for each model and rating)

1)The Type Test reports for offered rectifier module and the controller module irrespective of the rectifier bank shall be acceptable

Surge Withstand Capability(SWC)	ANSI 37.90.1, IEEE-472,EN 61000-4-12	No	No
Dry Heat Test	IEC-68-2-2 or equivalent	No	No
Damp Heat test	IEC-68-2-3 or equivalent	No	No
Vibration test	IEC68-2-6 or equivalent	No	No
Electrostatic discharge test	EN 61000-4-2 orr equivalent	No	No
Radio frequency immunity test	EN-61000-4-3 orr equivalent	No	No
Electromagnetic field immunity	EN 61000-4-3 orr equivalent	No	No
Degree of Protection	IS-13947 or equivalent	No	No

10	Battery ##	As per standard (col 4)	IS-10918 (Ni-Cd Batteries)	No	No
			IS-1652 (Lead Acid Plante Batteries)	No	No
11	NOT APPLICABLE				
12	UPS (Applicable for each model and rating)				
	1) Type Test reports of same series of UPS with similar PCB's cards and controllers as the target UPS system shall be acceptable.				
	2) For Dry heat, Damp heat and vibration, the tests conducted on individual PCB's shall be acceptable.				
		Surge Withstand Capability(SWC)	ANSI 37.90.1, IEEE-472,EN 61000-4-12	No	No
		Dry Heat Test	IEC-68-2-2 or equivalent	No	No
		Damp Heat test	IEC-68-2-3 or equivalent	No	No
		Vibration test	IEC68-2-6 or equivalent	No	No
		Electrostatic discharge test	EN 61000-4-2 orr equivalent	No	No
		Radio frequency immunity test	EN-61000-4-3 orr equivalent	No	No
		Electromagnetic field immunity	EN 61000-4-3 orr equivalent	No	No
		Degree of protection test	IS-13947	No	No
		Fuse Clearing Capability	Approved procedure	No	No
		Short Circuit current capability	IEC 60146-2	No	No
13	Voltage Stabilisers	Over Load Test	Approved procedure	No	No

		Temp rise test without redundant fans	Approved procedure	No	No
14	Public Address System				
	IP based PA system components	As per Standard	IEC 60268-16	No	Yes
15	LIE / LIR	Degree of protection test	IS-13947	No	No
16	Flue gas analyzers	Degree of protection test	IS-13947	No	No
17	Master Clock	Functional test	As per approved procedure	No	No
18	CJC Box	Degree Of protection test	IS-13947	No	No
19	Junction Box	Degree Of protection Test	IS-13947	No	No
20	OPC Data Access Server, Data Exchange Server & Historical Data Access Server	OPC Compliance Testing		No	No (Self certification is also acceptable)
21	Conductivity Type Level Switch	Degree of protection test	IS-2147	No	No
22	Local Gauges	Degree of protection test	IS-2147	No	No
23	Process actuated Switches	Degree of protection test	IS-2147	No	No
24	Control Valves	CV test	ISA 75.02& 75.11	No	No
25	PLCs	As per standard (Col	IEC 1131	No	No

			4)				
26	Flow Orifice Venturi	Nozzle plates,	Calibration	ASME PTC BS 1042	No		No

The contractor shall submit for Employers approval the reports of all the type test as per latest IS-10918 carried out within last ten years from the date of Bid opening and the test(s) should have been either conducted at an independent laboratory or in presence / owners representative. The complete type test reports shall be for any rating of Battery in a particular group based on plate dimensions being manufactured by supplier.

Note:

Type Tests are to be conducted only for the items, which are being supplied as a part of this Package.

	C&I SPECIFICATION FOR CPU SYSTEM	SECTION: C SUB SECTION: C&I

MANDATORY SPARES

CONDENSER POLISHING UNIT

CONTROL & INSTRUMENTATION –CPU

Sl. No.	ITEM	QUANTITY
1.00.00	**MEASURING INSTRUMENTS**	
1)	Electronic Transmitters	
(i)	Transmitters of all types and model. (for the measurement of Pressure, differential pressure, flow, level, etc.) including local indication (if applicable)	10 % or 1 no. of each type and model whichever is more
2)	Temperature elements	
(i)	Temperature Transmitter	10 % or 1 no. of each type and model whichever is more
(ii)	RTD's*	1 no. of each type
(iii)	Thermo well**	1 no. of each type
	* (With head assembly, terminal block and nipple) ** (to be divided into various insertion lengths in proportion to main population)	

Sl. No.	ITEM	QUANTITY
3)	Local Indicators (Non-Electrical type) - As applicable for the package as per the following items	
(i)	Temperature gauges	1 no. of each range and type
(ii)	Pressure gauges	1 no. of each range and type
(iii)	Differential Pressure Gauges,	1 no. of each range and type
(iv)	Level gauges	1 no. of each range and type
(v)	Flow gauges excluding Rota meters	1 no. of each range and type
(vi)	All types of Rota meters	1 no. of each range and type
4)	Process Actuated Switch Devices -As applicable for this package, as per the following items	
(i)	Temperature switches	1 no. of each range and type
(ii)	Pressure switches	1 no. of each range and type
(iii)	Differential Pressure switches	1 no. of each range and type
(iv)	level switches	1 no. of each range and type
(v)	Flow switches	1 no. of each range and type
5)	Solenoid Valves	10 % or 1 no. of each type and model whichever is more
6)	Limit Switches (for Pneumatic Valves and Manual valves)	2 no. of each type
7)	**ANALYSERS**	
1)	PH Analyzer	
	(a) Flow Through type cell and Electrode	1 no of each type
	(b) Electronic Transmitter unity without sensor	1 no of each type
	(c) Pre-fabricated cable with connector	1 set
2)	Conductivity Analyzer	
	(a) Flow Through type cell and Electrode	1 no of each type
	(b) Electronic Transmitter unity without sensor	1 no of each type
	(c) Pre-fabricated cable with connector	1 set
3)	Sodium Analyzer	
	(a) Main PCB assembly	1 no of each type
	(b) Power supply Cards(if applicable)	1 no of each type

Sl. No.	ITEM	QUANTITY
	(c) Rubber Tubes & Capillary Tubes	1 set
	(d) Pre-fabricated cable with connector	1 set
	(e) Solenoid Valves	1 set
	(f) All Chemical Reagents for 12 month operation (Supply to be staggered as per the shelf life)	1 set
4	Silica analyser (if applicable)	
	(a) Main PCB assembly	1 no of each type
	(b) Power supply Cards(if applicable)	1 no of each type
	(c) Rubber Tubes & Capillary Tubes	1 set
	(d) Pre-fabricated cable with connector	1 set
	(e) Solenoid Valves	1 set
	(f) All Chemical Reagents for 12 month operation (Supply to be staggered as per the shelf life)	1 set
5	**Dissolved O2 Analysers (if applicable)** **- Similar spares as above analysers**	
6	**Turbidity analysers (if applicable)** **- similar spares as above analyesrs**	
2.00.00	**PROCESS CONNECTION PIPING (FOR IMPULSE PIPING/TUBING, SAMPLING PIPING/TUBING AND AIR SUPPLY PIPING AS APPLICABLE)**	
1)	2 way, 3way, 5way valve manifolds	1 no. of each type, class, size and model
2)	Filter regulator(if applicable)	1 no. of each type, class, size and model
3.00.00	**CONTROL VALVES, ACTUATORS AND ACCESSORIES**	
1	Pneumatic and electro-hydraulic actuator assembly	10% or 1 no. of each type, model and rating, whichever is more.
2	Diaphragms, O' rings, seals etc. of all types make etc.	100%
3	Pressure Gauges of all types, make, rating etc.	10% or 2 nos. of each type

Sl. No.	ITEM	QUANTITY
		whichever is more
4	Solenoid valves (if applicable)	10% or 2 nos. of each type whichever is more
5	Positioner units /smart positioners (complete unit)& accessories (link assembly)	10% or 1 no. of each type whichever is more
6	Pneumatic air-filter/Regulator of each type, make rating etc.	10% or 2 Nos., whichever is more
7	Air lock relays	10% or 2 nos. of each type whichever is more
3.00.01	**PNEUMATICALLY OPERATED ISOLATION / BLOCK VALVES, ACTUATORS & ACCESSORIES (For all ON/OFF valves supplied under this package even if one or more of these items are also specified elsewhere under mandatory spares)**	
1.	Pneumatic actuator assembly.	10% or 1 no. of each type, model and rating, whichever is more.
2.	Diaphragms, O' rings, seals etc. of all types make etc.	100%
3.	Limit switches (complete unit)& accessories (link assembly)	10% or 2 Nos., whichever is more
4.	Pneumatic air-filter/Regulator of each type, make rating etc.	10% or 2 Nos., whichever is more

KKS TAGGING PHILOSOPHY

DOCUMENT TITLE

KKS NUMBERING PHILOSOPHY

ANNEXURE-1

List of System / Sub-System Codes used in Power Plant:

1) Refer the P&ID sheets.

ANNEXURE-2

Standard Equipment Codes:

AA	Valves including drives, also hand operated
AB	Seclusions, Lock, Gates, Doors
AC	Heat Exchanger
AE	Turning, Driving, Lifting equipment
AF	Continuous conveyors, Feeders
AG	Generator Units
AH	Heating and Cooling Units
AK	Pressing and Packaging equipment
AM	Mixer, Stirrer
AN	Blower, Air Pumps / Fans, Compressor Units
AP	Pump Units
AT	Purification, Drying, Filter
AV	Combustion Equipment e.g. grates

Standard Apparatus Codes:

BB	Vessels and Tank
BF	Foundation
BG	Boiler Heating Surfaces
BN	Injector, Ejector
BP	Flow and throughput limitation equipment (Orifice)
BQ	Holders, Carrying Equipment, Support
BR	Piping, Ducts, Chutes, Compensator
BS	Sound Absorber
BU	Insulations, Sheatings

Standard Measuring Circuits Codes:

CD	Density
CE	Electrical Quantities
CF	Flow, throughput
CG	Distance, Length, Position
CK	Time
CL	Level

CM	Humidity
CQ	Analysis (SWAS)
CS	Speed, Velocity, Frequency
CT	Temperature
CY	Vibration, Expansion

ANNEXURE-3

Numerical Keys

A) Numerical Keys at System Code Level

i) Use 10, 20, 30... To distinguish between main systems having same Alpha Codes. Examples:

a) Main Steam (Left) and Main Steam (Right)

b) BFP – A/B/C

c) ID Fan – A/B, FD Fan A/B, AH – A/B

ii) For branch off from main system path having code say 10, keep the same alpha code and use 11, 12, 13 etc. Similarly for other branch off from main system path having code say 20, keep the same alpha code and use 21, 22, 23 etc and shall carry on further in the same way.

iii) If the branch off from main system / sub system path is used for some other system, where different alpha codes can be applied, then in that case the said branch line will be designated by the alpha codes of the system to which it is providing the input.

B) Numerical keys at Equipment Code level:

There are three numerical keys available for each type of equipment code. Following has been agreed upon considering present practice, better flexibility and ease in sorting.

i) Valves and Dampers --- *Equipment Code – AA*

		N1	N2 N3
Motorised *(on/off duty)*	-	*0*	*01 to 50*
Motorised (inching duty)	-	*0*	*51 to 99*
Pneumatic (Control)	-	*1*	*01 to 50*
Motorised (thyrestor Control)	-	*1*	*51 to 99*
Sol. Operated	-	2	01 to 99
(Open / Close duty (Valves, NRVs, Gate)			
Hydraulic	-	3	01 to 99

NRV (Without actuation)	-	4	01 to 99
Manual	-	5	01 to 99
Manual	-	6	01 to 99
Relief & Safety Valves	-	7	01 to 99
Reserve	-	8	01 to 99
Reserve	-	9	01 to 99

ii) Field Instruments

Field Transmitters & Analog Signals	-	0	01 to 99
Field Switches & Binary Signals	-	1	00 to 99
PG Test Point	-	4	00 to 99
Gauges	-	5	00 to 99
Automatic Turbine Tester (ATT)-HWR	-	2	00 to 99
(Reserved for protection Signals used by Hardwar)			

Example of Numerical Key Usage:

In line with the philosophy adopted for Valves / Dampers /instruments etc. pumps and fans in the main systems (having different system code) can be numbered as AP/N100 and as AP/N101, 102, ……. Where system code is same.

.FOR INSTR MENTS KKS 6 AND 7 PLACE AL E OF KKS CODE SHALL BE CHANGED FOR CORRESPONDING EQ IPMENT AS FOLLO S:-
1.FOR PRESS RE -CP
2.FOR TEMPERAT RE/GT/AT/TEMP SENSOR-CT
3.FOR LE EL-CL
4.FOR FLO -CF
5.R.H.SENSOR-CM
FOR INSTR MENTS 8 9 AND 10 PLACE AL E OF KKS CODE SHALL BE CHANGED FOR CORRESPONDING EQ IPMENT AS FOLLO S:-
1.FOR PRESS RE/TEMPERAT RE/LE EL TRANSMITTER-011
2.FOR PRESS RE/TEMPERAT RE/LE EL GA GE-511
3.FOR PRESS RE/TEMPERAT RE/LE EL S ITCH-111

This document is the property of NTPC Ltd.
No part of this document will be reproduced by any means without the written permission.

FORMAT FOR LIST OF PT, DPT AND GUIDED WAVE RADAR (GWR) TYPE

Position	Field Name	Type	Description
1	**KKS_CODE**	**Text**	This column contains the KKS code of instrument. This should be same as indicated in the P&ID/Instrument schedule and Process I/O list.
2	**DESCRIPTION**	**Text**	This column contains Description of application for which instrument is being used.
3	**PARAMETER**	**Text**	This columns contains Process parameter measured by the Instrument e.g. GAUGE PRESS, ABS PRESS, DIFF PRESS, LEVEL, FLOW.
4	**TYPE OF TRANSMITTER**	**Text**	PT / DPT / GWR
5	**MEDIUM**	**Text**	This column contains the MEDIUM of measured process e.g. CONDENSATE, FEED WATER, DM WATER, STEAM, WATER, SLURRY, AIR, FLUE GAS, HFO, LDO etc.
6	**SCOPE OF SUPPLY**	**Text**	This column contains the scope of supply for Instruments e.g. STN C&I If Instrument Is to be supplied under Station C&I Package or SG If Instrument Is to be supplied under SG Package or TG If Instrument Is to be suplied under TG Package .
7	**PROCESS_RANGE**	**Alpha-numeric**	This column contains the range (along with unit of measurement) of parameter being measured by instrument e.g. 0-100 T/HR, (-1)-5 KG/CM2, (-1)-(-5) KG/CM2. Format should be same as given in example.
8	**DP RANGE (FOR LEVEL, FLOW)**	**Alpha-numeric**	This column contains the DP range (along with unit) corresponding to flow or level measurement and applicable where DP type transmitter is being used for flow or level measurement.
9	**OPR VALUE**	**Alpha-numeric**	This column contains the normal operating value of the process being measured.
10	**P_MAX**	**Alpha-numeric**	This column contains the maximum operating pressure of the process medium along with engineering unit. For DP type of transmitters, maximum operating pressure of high pressure side are to be indicated. Caution :- Pipe design pressure may not be same as process maximum operating pressure. Please keep this in view while filling this details.
11	**T_MAX**	**Alpha-numeric**	This column contains the maximum value of operating temp along with engineering unit.
12	**PROCESS END CONNECTION DETAILS**	**Alpha-numeric**	This column contains the tapping details of process end to which instrument should be compatible. This information shall have to be filled in line with corresponding process tapping drawing/ isometric drawing/ fabrication drawing.
13	**SPECIAL_REMARK**	**Text**	This column contains any additional requirement for the Instrument e.g. Requirement for DIAPHRAGM SEAL, requirement for hazardous area application (hydrogen, chlorine).
14	**REF_DOC_NO**	**Alpha-numeric**	This column contains the document number along with revision number of PID or Instrument schedule In which the Instrument and related proces parameters are shown.
15	**QTY PER UNIT**	**numric**	This column Indicates the per unit quantity of that Instrument.
16	**TOTAL QTY**	**numric**	This column Indicates the total quantity of that Instrument for the STATION.
17	**REV_REMARK**	**Text**	This column contains name of the columns In which changes are done w.r.t. last revision.
18	**REV_NUMBER**	**numric**	This column Indicates the progressive Revision number e.g. 0, 1, 2. Any change done should be marked with correct revision detail for Identification.
19	**REV_CODE**	**Text**	Write A for data chages In any column, B If Instruemnt Is added In this revision and C If Insturment Is to be deleted (Please do not remove row, only write C In the revision code).

FOR TENDER PURPOSE ONLY

एन टी पी सी लिमिटेड
NTPC LIMITED
(A GOVERNMENT OF INDIA ENTERPRISE)
ENGINEERING DIVISION

PROJECT: TYPICAL THERMAL POWER PROJECT

TITLE: FORMAT FOR LIST OF PT, DPT AND GUIDED WAVE RADAR (GWR) TYPE

REV.NO.	DESCRIPTION	DRAWN	DESIGN	CHKD.	CLEARED BY: M	E	C	C&I	ARCH.	APPD	DATE
A	FIRST ISSUE	BG	BG	MJ							25.1.11

SIZE	SCALE	DRG. NO.	REV. NO.
A3	NTS	0000-999-POI-G-002 SH 01 OF 08	A

This document is the property of NTPC Ltd.
No part of this document will be reproduced by any means without the written permission.

FORMAT FOR LIST OF TEMPERATURE ELEMENTS AND TEMPERATURE TRANSMITTERS

Position	Field Name	Type	Description
1	KKS_CODE	Text	This column contains the KKS code of instrument. This should be same as indicated in the P&ID/Instrument schedule and Process I/O list.
2	DESCRIPTION		This column contains Description of application for which temp element is being used.
3	PARAMETER	Text	This column contains Process parameter measured by the Instrument e.g TEMP
4	TYPE OF TE	Text	This column contains type of TEMP ELEMENT i.e. Pt100, K TYPE T/C, R TYPE T/C etc.
5	SCOPE OF SUPPLY	Text	This column contains the scope of supply for TEMP ELEMENT & TRANSMITTER e.g. STN C&I if TE+TT is to be supplied under Station C&I Package or SG if TE+TT is to be suplied under SG Package or TG if TE+TT is to be suplied under TG Package .
6	TYPE OF TT	Text	This column indicates type of TEMP TRANSMITTER i.e. DIN RAIL, HEAD MOUNTED, DUAL INPUT, FIELD BUS.
7	MEDIUM	Text	This column contains the MEDIUM of measured process e.g. CONDENSATE, FEED WATER, DM WATER, STEAM, WATER, SLURRY, AIR, FLUE GAS, HFO, LDO, etc.
8	PROCESS_RANGE	Alpha-numeric	This column contains the range (along with unit of measurement) of parameter being measured by instrument e.g. 0-100 DEGC, (-10)-100 DEGC. Format should be same as given in example.
9	OPR VALUE	Alpha-numeric	This column contains the normal operating value of the parameter being measured.
10	P_MAX	Alpha-numeric	This column contains the maximum operating pressure of the process medium along with engineering unit. For DP type of transmitters, maximum operating pressure of high pressure side are to be indicated. Caution :- Pipe design pressure may not be same as process maximum operating pressure. Please keep this in view while filling this details.
11	T_MAX	Alpha-numeric	This column contains the maximum value of operating temp along with engineering unit.
12	VELOCITY_MAX	Alpha-numeric	This column contains the maximum value of Process velocity along with enginering unit.
13	LINE SIZE	Alpha-numeric	This column indicates the Size of Line/pipe in which temp element is to be fitted. Format shall be like Pipe OD x Pipe thickness.
14	LINE INSULATION THICKNESS	Alpha-numeric	This column indicates the thickness of insulation provided on the process line in which temp element is to be fitted.
15	THERMOWELL MATERIAL	Alpha-numeric	This column contains material of thermowell.
16	IBR CERTIFICATION	Text	Y means IBR certification is required. BLANK means same is not applicable.
17	PROCESS END CONNECTION DETAILS	Alpha-numeric	This column contains the tapping details of process end to which instrument/ thermowell should be compatible. This information shall have to be filled in line with corresponding process tapping drawing/ isometric drawing/ fabrication drawing.
18	TT JB DETAILS	Alpha-numeric	DUAL INPUT TT and DIN Rail type TT shall be mounted in the junction boxes. There will be separate type of JB for Dual input TT and Din Rail type TT. The grouping details of TTs in a junction box are to be indicated in this column for these two types of TTs. Format can be e.g. For TTs of SG area :- TT JB numenclature can be SG-TTJB1, SG-TTJB2 etc. or For TTs of TG area :- TT JB numenclature can be TG-TTJB1, TG-TTJB2 etc..
19	SPECIAL_REMARK	Text	This column contains any additional requirment for the Instrument.
20	QTY/UNIT	numric	This column indicates the per unit quantity of that instrument.
21	TOTAL QTY	numric	This column indicates the total quantity of that instrument for the STATION.
23	REF_DOC_NO	Alpha-numeric	This column contains the document number along with revision number of PID or Instrument schedule in which the Instrument and related proces parameters are shown.
24	REV_REMARK	Text	This column contains name of the columns in which changes are done w.r.t. last revision.
25	REV_NUMBER	numric	This column indicates the progressive Revision number e.g. 0, 1, 2. Any change done should be marked with correct revision detail for identification by vender.
26	REV_CODE	Text	Write A for data chages in any field, B if instruemnt is added in this revision and C if insturment is to be deleted (Please do not remove row, only write C in the revision code).

FOR TENDER PURPOSE ONLY

एन टी पी सी लिमिटेड
NTPC LIMITED
(A GOVERNMENT OF INDIA ENTERPRISE)
ENGINEERING DIVISION

PROJECT: TYPICAL THERMAL POWER PROJECT

TITLE: FORMAT FOR LIST OF TEMPERATURE ELEMENTS AND TEMPERATURE TRANSMITTERS

REV.NO.	DESCRIPTION	DRAWN	DESIGN	CHKD.	M	E	C	C&I	ARCH.	APPD	DATE
A	FIRST ISSUE	BG	BG	MJ							25.1.11
					CLEARED BY						

SIZE	SCALE	DRG. NO.	REV. NO.
A3	NTS	0000-999-POI-G-002 SH 02 OF 08	A

This document is the property of NTPC Ltd.
No part of this document will be reproduced by any means without the written permission.

FORMAT FOR LIST OF DRIVES

Position	Field Name	Type	Description
1	ID	Alpha-numeric	This column indicates the unique identification number of that drive assigned by package engineer e.g. for first drive pertaining to SG area, this number will be SG-D-1 or for first drive pertaining to TG area, this number will be TG-D-1.
2	KKS_CODE	Text	This column contains the KKS code of DRIVE including UNIT/COMMON prefix. Prefix for any unitised Drive will be 10 for UNIT-1, 20 for UNIT-2, 30 for UNIT-3. For any common drive prefix will be 00. This should be same as indicated in the P&ID or other relevant document of equipment or process supplier .
3	TAG	Text	This column indicates the alternate tag number (if any) for that drive beside KKS_CODE as indicated in the P&ID/other document.
4	DESCRIPTION	Text	This column contains Description Of Drive. Pl keep drive description limited to 24 characters.
5	DRIVE_TYPE	Text	This column indicates the Type of Drive e.g. HT, LT etc..
6	O_C	Text	O for OLCS (ON/OFF, OPEN/CLOSE) drives and C for CLCS (Regulating) drives
7	AREA	Text	This column indicates the process area or Major equipment.
8	PACKAGE	Text	This column indicates the corresponding package name of the drive/equipment e.g. STN C&I, SG, TG, AHP, CHP, DM, PT, CT, CW
9	DDCMIS_NAME	Text	This column contrains the control scope of drives. Write STN C&I for Station-C&I DDCMIS, SG for SG DDCMIS, TG for TG DDCMIS etc
10	PROCESS_BLOCK_STREAM	Text	This column will indicate the process block applicable for that drive e.g. For STN C&I DDCMIS : Secondary air (SA), Steam & Water (SW), Primary air (PA), BOP-TG (TG), Electrical (ELECT). Further for STN C&I DDCMIS In order to maintain stream wise process redundancy, stream information will also be indicated along with process block information e.g.FD fan A and B belongs to process block SA In Unit DDCMIS, so PROCESS_BLOCK_STREAM for FD FAN A will be SA-A and same for FD FAN B will be SA-B.
11	FG	Number	This column indicates the Functional Group number e.g. FG01, FG02, FG101, FG301. This will be assigned by DDCMIS supplier based on PROCESS_BLOCK_STREAM (column 10) information. Not required to be filled by SG/TG Vendor.
12	RIO	Text	This column contains the NAME of the Remote IO (if applicable) for that drives. Not required to be filled by SG/TG Vendor.
13	EQUP_GR	Text	This column contains the information of groups defined for I/O allocation within one FG/controller. I/Os for Drives defined under one EQUP GR can be assigned in same input or output cards within the FG/RIO. However I/Os for drives belonging to different EQUP GR should be allocated to separate I/O cards.
14	SOLENOID_GR	Text	Applicable only for solenoid operated valves (SOV, DSOV). This column contains the information of specific group of solenoids powered from one common feeder and one isolation / monitoring.
15	O/P_REDUNDANCY	Yes/No	Y indicates that redundant O/Ps (from two different O/P modules or from redundant type of O/P modules) are to be considered for these drives.
16	UCD_PB_ DETAIL	Alpha-numeric	This column indicates the detail of push button station on the control desk (located in CR) for that drive e.g. 2PB+3L, 3PB+3L, 2PB+4L etc.
17	SYNCH	Yes/No	This column is applicable for Electrical breakers only. Y indicates drive is SYNCH type. Blank means not applicable.
18	REMOTE_OPRN	Yes/No	N indicates that remote operation for that drive from OWS/LVS has to be inhibited. BLANK means remote operation from OWS/LVS is allowed.
19	MODULE_TYPE	Text	This field is applicable for LT motors, HT motors and electrical breakers. This indicates the type of MCC/SWGR module for that drive. Not required to be filled by SG/TG Vendor.
20	MODULE_NO	Text	This field is applicable for LT motors, HT motors and electrical breakers. This indicates the module number of MCC/SWGR module for that drive. Not required to be filled by SG/TG Vendor.
21	SPECIAL_REMARK	Text	This field indicates the special remark/requirement, if any, for that drive. Following are to be compulsorily included (as applicable) in this column. 1) Solenoid coil voltage and solenoid VA/Wattage for solenoid type of drives e.g. Solenoid coil is 24VDC/8W or Solenoid coil is 240V AC/10VA etc. Further if solenoid coil voltage is other than 24V DC, the powering scheme of such solenoids should be specifically furnished.
22	REF_DOC_NO	Alpha-numeric	This column contains the document number (including rev number) of PID or schedule in which the drive is shown.
23	REV_REMARK	Text	This column contains name of the columns in which changes are done w.r.t. last revision.
24	REV_NUMBER	numeric	This column indicates the progressive Revision number e.g. 0, 1, 2. Any change done should be marked with correct revision detail for identification by vender.
25	REV_CODE	Text	Write A for data changes in any column, B If drive is added in this revision and C If drive is to be deleted (Please do not remove row, only write C in the revision code).

FOR TENDER PURPOSE ONLY

एन टी पी सी लिमिटेड
NTPC LIMITED
(A GOVERNMENT OF INDIA ENTERPRISE)
ENGINEERING DIVISION

PROJECT: TYPICAL THERMAL POWER PROJECT

TITLE: FORMAT FOR LIST OF DRIVES

REV.NO.	DESCRIPTION	DRAWN	DESIGN	CHKD.	CLEARED BY: M	E	C	C&I	ARCH.	APPD	DATE
A	FIRST ISSUE	BG	BG	MJ							25.1.11

SIZE	SCALE	DRG. NO.	REV. NO.
A3	NTS	0000-999-POI-G-002 SH 04 OF 08	A

This document is the property of NTPC Ltd.
No part of this document will be reproduced by any means without the written permission.

FORMAT FOR PROCESS IO LIST

Position	Field Name	Type	Description
1	ID	Alpha-numeric	This column indicates the unique identification number of that signal assigned by package engineer e.g. for first signal pertaining to TG area, this number will be TG-P-1. Similarly for first signal of DM area, this number will be DM-P-1. Please note that no additional sr. no. column is required.
2	KKS_CODE	Text	This column contains the KKS code of the signal including UNIT/COMMON prefix. Prefix for any unitised signal will be 10 for UNIT-1, 20 for UNIT-2, 30 for UNIT-3. For any common signal prefix will be 00.
3	TAG	Text	This column indicates the alternate tag number (if any) for that signal beside KKS_CODE as indicated in the P&ID/other document.
4	DESCRIPTION	Text	This column contains Description Of SIGNAL. Pl keep description limited to 24 characters.
5	STATUS	Text	This column is applicable for digital signals only and indicates the Status of the process value e.g. HIGH, LOW, ADEQ, NRML etc.
6	RECORD_TYPE	Text	Write DI for Digital Inputs, DISOE for SOE inputs, DO for Digital Outputs, AI for Analog Inputs and AO for Analog Outputs.
7	IO_TYPE	Text	Write DI[DRY] for potential free contact Inputs with contact Interrogation voltage from DDCMIS, DI[24V DC] for 24V DC digital Inputs which do not require any contact Interrogation voltage from DDCMIS, AI[4-20] for analog Inputs which is to be loop powered from DDCMIS, AI[4-20]LIVE for analog Inputs which are having their own power supply and are not to be loop powered from DDCMIS and Galvanic isolation is required, AI[4-20]HART for analog inputs with HART information, DO[DRY] for potential free contact type digital output, DO[24V DC] for 24V DC digital output, AO[4-20] for 4-20 mA analog output, AO[4-20]LIVE for 4-20mA analog output for which Galvanic Isolation is required.
8	NO_NC	Text	This column is applicable for DI[DRY] IO_type only. Write NO, NC, NO of COC, NC of COC in this column. Please note that COC signals are to be listed as two signals in the I/O list.
9	O_I_C	Text	O for signals being used in the OLCS, C for signals being used in CLCS and I for signals being used only for alarm/Information
10	AREA	Text	This column indicates the process area or Major equipment related to that drive e.g. for discharge and suction valves of MDBFP-A, Area can be MDBFP-A. Area should be filled in such a way that if DDCMIS supplier wants to divides one PROCESS_BLOCK in two or more functional group / controller, area wise signals distribution can be possible. Area In Drive list and Process IO should be matching.
11	EQUP_GR	Text	This column contains the Information of groups defined for I/O allocation within one FG/controller. I/Os defined under one EQUP GR can be assigned in same Input or output cards within the FG/RIO. However I/Os belonging to different EQUP GR should be allocated to separate I/O cards. If this field is blank, such I/Os can be assigned to any of the relevant card within the FG/RIO. In case of triple / dual measurements, the vender shall try to allocate these signals to same channel number of three /two (for triple or dual measurement) different I/O modules. Unique nos. for TR and DR series with in each BLOCK/RIO shall be maintained.
12	PACKAGE	Text	This column indicates the corresponding package name related to signal e.g. TG, SG, AHP, CHP, DM, PT, CT, CW
13	DDCMIS_NAME	Text	This column contains the name of DDCMIS where this signal is to be connected. Write STN C&I for Station-C&I DDCMIS, SG for SG DDCMIS, TG for TG DDCMIS etc
14	PROCESS_BLOCK_STREAM	Text	This column will indicate the process block applicable for that signal e.g. For STN C&I DDCMIS : Secondary air (SA), Steam & Water (SW), Primary air (PA), BOP-TG (TG), Electrical (ELECT). Further for STN C&I DDCMIS In order to maintain stream wise process redundancy, stream information will also be indicated along with process block information e.g.FD fan A and B belongs to process block SA In Unit DDCMIS, so PROCESS_BLOCK_STREAM for FD FAN A will be SA-A and same for FD FAN B will be SA-B.
15	FG	Number	This column indicates the Functional Group number e.g. FG01, FG02, FG101, FG301. This will be assigned by DDCMIS supplier based on PROCESS_BLOCK_STREAM information. Not required to be filled by SG/TG Vendor.
16	RIO	Text	This column contains the NAME of the Remote IO (if applicable) for that signal. Not required to be filled by SG/TG Vendor.
17	SOURCE	Text	This field indicates the source of the signal e.g. MCC, SWGR, ACTR, FIELD JB, LIE-JB, LIR-JB, FIELD, LCP, UCD etc. For output signals same is DDCMIS, DDCMIS RLY PNL.
18	DESTINATION	Text	This field indicates the destination of the signal. For input signals destination is DDCMIS. For output signals destination may be MCC, SWGR, ACTR, FIELD JB, FIELD, DDCMIS, LCP, UCD etc.
19	ALM	Text	write Y for signals which are directly (without any logical operation) being used for alarm e.g. If a pressure switch contact is being used for alarm directly, Indicate Y In this column. However If a pressure switch signal with some time delay is being used for alarm, same should be covered In the logic and shall be called logic generated alarm.
20	PARAMETER	Text	This column is applicable mainly for analog signals and indicates the process parameter corresponding to analog signal. Write GAUGE PRESS, ABS PRESS, DIFF PRESS, LEVEL, FLOW, TEMP, CURRENT, VOLTAGE, MW, MVAR , PF (for power factor) according to measurement.
21	INST_TYPE	Text	This column indicates the basic instrument type from where signal is generated e.g. PT for gauge pressure & absolute pressure measurement, DPT for diff press as well as for flow & level measurement by using DPT, GWR for level measurement by guided wave radar type LT, ULTRA-LT & ULTRA-FT for level & flow measurement respectively by ultrasonic transmitters, pt100+TT for temp measurement by pt100 RTD along with temp transmitter, K TYPE T/C+TT for temp measurement by K type T/C along with temp transmitter, R TYPE T/C+TT for temp measurement by R type T/C along with temp transmitter, PS for pressure switch, DPS for switch, TS for temp switch, FS for flow switch, LS for level switch, DPM for dew point meter, CM for conductivity meter/Tx, ANALYSER for H2 purity & any of SWAS/ Flue gas/ DM plant/PT plant analyser except conductivity & moisture analyser. Write SE i.e signal exchange for signals which are being used for hardwired signal exchange between two systems e.g. SG control system and Station-C&I control syste
22	PROCESS_RANGE	Alpha-numeric	This column is applicable for analog Inputs. This column contains the range (along with unit of measurement) for the process parameter corresponding to analog signal e.g. 0-100 T/HR, (-1)-5 KG/CM2, (-1)-(-5) KG/CM2, 0-100 DEGC. Range of analog signals are to be indicated along with Engineering unit for analog point configuration In the DDCMIS.
23	INST_SCOPE	Text	This column primarily indicates the scope of instrument supply. Write STN C&I in this column for instruments which are to be supplied in Station C&I Package or For Instruments which are not under scope of Station C&I, write SG C&I/TG C&I.
24	REF_DOC_NO	Alpha-numeric	This column contains the document number along with revision number of PID or schedule/list/logic/write up In which source of signal is indicated.
25	SPECIAL_REMARK	Text	This field indicates the special remark/requirement If any for that I/O. Following are to be compulsorily included (as applicable) In this column. 1) For DO[DRY] type signals, the contact Interrogation voltage (circuit voltage where DDCMIS/relay contact will be used) is to be indicated. 2) For signal exchanges within same DDCMIS, please write "SIGNAL EXCHANGE WITHIN SYSTEM". For signal exchange with other DDCMIS systems, write "SIGNAL EXCHANGE BETWEEN UNIT DDCMIS AND SG OR TG ETC.".
26	REV_REMARK	Text	This column contains name of the columns in which changes are done w.r.t. last revision.
27	REV_NUMBER	numeric	This column indicates the progressive Revision number e.g. 0, 1, 2. Any change done should be marked with correct revision detail for identification by vender.
28	REV_CODE	Text	Write A for data changes In any column, B If Instrument is added In this revision and C If Instrument is to be deleted (Please do not remove row for Instrument to be deleted, only write C In the revision code).

FOR TENDER PURPOSE ONLY

एन टी पी सी लिमिटेड
NTPC LIMITED
(A GOVERNMENT OF INDIA ENTERPRISE)
ENGINEERING DIVISION

PROJECT: TYPICAL THERMAL POWER PROJECT

TITLE: FORMAT FOR PROCESS IO LIST

REV.NO.	DESCRIPTION	DRAWN	DESIGN	CHKD.	CLEARED BY: M	E	C	C&I	ARCH.	APPD	DATE
A	FIRST ISSUE	BG	BG	MJ							25.1.11

SIZE	SCALE	DRG. NO.	REV. NO.
A3	NTS	0000-999-POI-G-002 SH 05 OF 08	A

DRAWING FOR TENDER PURPOSE ONLY

CABLE LIST FORMAT :									
NTPC CABLE NO	NTPC CABLE CODE	UNIT NO	FROM DESCRIPTION	FROM_LOCATION	TO DESCRIPTION	TO_LOCATION	CABLE SCOPE	SEPARATE PATH	NTPC CABLE NO

Drwg No: 0000-999-POI-G-002 Rev-A

Page 6 of 8

This is part of Technical Specification No. PE-TS-475-155-A001

DRAWING FOR TENDER PURPOSE ONLY

CABLE LIST FORMAT DETAILS :

NTPC CABLE ID	MEANINGFUL ALPHANUMERIC ID SHALL BE ASSIGNED.IT SHALL BE LIMITED TO 7 CHARACTERS
NTPC CABLE CODE	THIS COLUMN SHALL CONTAIN 7 CHARACTER NTPC CABLE CODE(AS PER CABLE CODING GUIDELINES FURNISHED BELOW)
UNIT NO	UNIT NO. OF THE PLANT e.g. 01 MAY BE FILLED FOR UNIT NO.1
FROM DESCRIPTION	DESCRIPTION OF THE SOURCE FROM WHICH CABLE IS RUN
FROM_LOCATION	X,Y,Z COORDINATES OF THE SOURCE FROM WHICH CABLE IS RUN
TO DESCRIPTION	DESCRIPTION OF THE DESTINATION WHERE THE CABLE TERMINATES
TO_LOCATION	X,Y,Z COORDINATES OF THE DESTINATION WHERE THE CABLE TERMINATES
CABLE SCOPE	SCOPE OF SUPPLY AND LAYING OF THE CABLE e.g FOR CABLES IN ABFPL SCOPE "ABFPL" MAY BE FILLED IN THIS COLUMN
SEPARATE PATH	IF A CABLE IS TO BE ROUTED THROUGH A SEPARATE PATH W.R.T ANOTHER CABLE,THEN "YES"IS TO BE MENTIONED IN THIS COLUMN.TWO OR MORE CABLES WHICH ARE TO BE ROUTED THROUGH SEPARATE PATH W.R.T EACH OTHER SHOULD HAVE SAME NTPC CABLE ID WITH SUFFIXES AS,B,C ADDED AT THE END OF THE NTPC CABLE ID.

CABLE CODING PHILOSOPHY

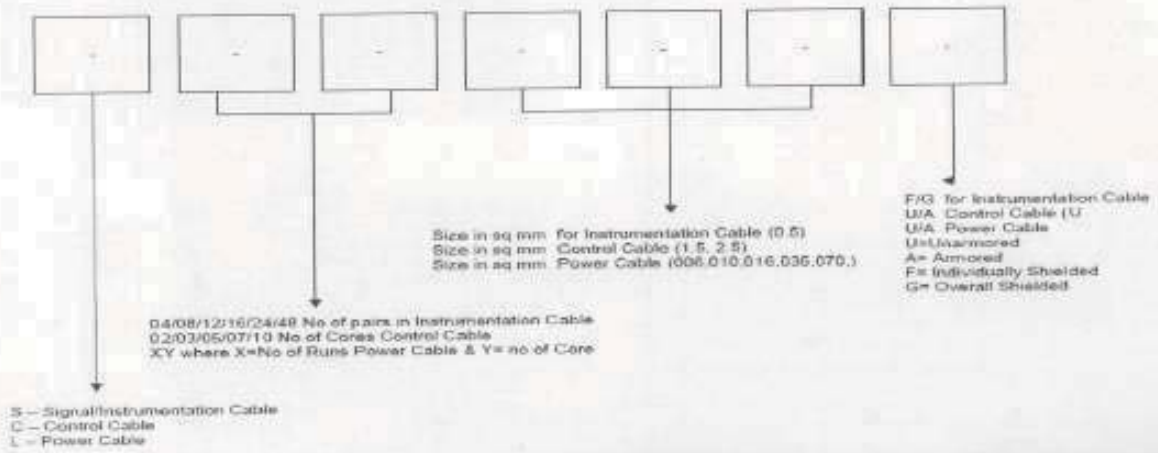

Drwg No: 0000-999-POI-G-002 Page 7 of 8

Rev-A

	C&I SPECIFICATION FOR CPU SYSTEM	SECTION: C SUB SECTION: C&I

SUB VENDOR LIST

PACKAGE WISE REGISTERED SUPPLIER LIST (PERMANENT CATEGORY) AS ON 6/26/2020 3:58:12 PM

Sl No	Package Code	Package Name	Common Supplier Code	PEM Supplier Code	Supplier Name	TIN No.	Reg Status	Supplier Communication Address	Supplier Works Address	Department	Tech Limit	Fin Limit	DT Regular	Avg. SPR	No of PO for SPR	Agent, if any	MSE status	Validity of MSE Certificate	Remarks
190	145-03000-A	PROGRAMMABLE LOGIC CONTROLLER	I0000462	H063	Honeywell Automation India Limited ,		REGULAR	56 & 57, Hadapsar Industrial Estate, Pune, Phone- 9689940949, Pincode : Email : amit.aglave@honeywell.com,	Works-1-> 56 & 57, Hadapsar Industrial Estate, -Pune-MAHARASHTRA India Phone- 9689940949, FAX : 020-66039800, Pincode : Email : amit.aglave@honeywell.com	C&I			28-Mar-13						, , ,
191	145-03000-A	PROGRAMMABLE LOGIC CONTROLLER	I0002112	G035	GE Intelligent Platforms Private Limited		REGULAR	90/B, ELECTRONICS CITY, HOSUR ROAD, BANGLORE Phone- 28528328 Pincode : 561229 Email : shivesh.k.jha@ge.com		C&I				84.5	2				, , ,
192	145-03000-A	PROGRAMMABLE LOGIC CONTROLLER	I0002111	S083	SCHNEIDER ELECTRIC INDIA PVT.LTD.		REGULAR	A-4 , MOHAN CO-OP INDL AREA MATHURA ROAD NEW DELHI Phone- Pincode : 110044 Email : aditya.bawa@schneider-electric.com		C&I									, , ,
193	145-03000-A	PROGRAMMABLE LOGIC CONTROLLER	I0002110	R021	ROCKWELL AUTOMATION INDIA LTD		REGULAR	(ALLENBRADLEY),C-11, SITE-4, INDUSTRIAL AREA SHHIBABAD, GHAZIABAD Phone- 2895247-52 Pincode : 201010 Email : pmehrotra@rockwell.com	Works-1->Anup Sharma C-11 Site-4 Industrial Area,Sahibabad -Ghaziabad-UTTAR PRADESH India Phone- 0120-4017926 FAX : 0120-2895224 Pincode : 201010 Email : raindia@ra.rockwell.com	C&I			30-Jul-10						, , ,
194	145-03000-A	PROGRAMMABLE LOGIC CONTROLLER	I0000437	S001	SIEMENS LIMITED		REGULAR	Dr. Armin Bruck/Sandeep Mathur 130, Pandurang Budhkar Marg Worli Mumbai Phone- 0124 383 7377 Pincode : 400018 Email : ankit.varshney@siemens.com	Works-1->Ankit Varshney Kalwa Works, Thane-Belapur Road, Thane, -MUMBAI-MAHARASHTRA INDIA Phone- FAX : Pincode : 400708 Email :	C&I						SIEMENS, Singapore			, , ,
195	145-03000-A	PROGRAMMABLE LOGIC CONTROLLER	I0006178	M205	MITSUBISHI ELECTRIC INDIA PVT. LTD.		REGULAR	Mr. Mehul Dholakia Emerald House, EL-3, J Block, M.I.D.C., Bhosari, Pune Phone- 020-27102000 Pincode : 411026 Email : mehul.dholakia@asia.meap.com,	Works-1->Mr. Mehul Dholakia Others Emerald House, EL-3, J Block, M.I.D.C., Bhosari, -Pune-MAHARASHTRA INDIA Phone- 020-27102000 FAX : 020-27102100 Pincode : 411026 Email : mehul.dholakia@asia.meap.com	C&I			15-Sep-15						, , ,
196	145-04000-A	CONTROL VALVE	I0006003	R001	R.K.CONTROL INSTRUMENTS PVT. LTD.		REGULAR	PLOT NO.A-250, OPP.POLICE STATION, WAGLE INDUSTRIAL ESTATE, THANE Phone- 25820943/2331 Pincode : 400604 Email : rkcipl@vsnl.com ; rkcinpvt@bol.net.in	Works-1->SAVITH KUMAR PLOT NO. A-250, OPP.POLICE STATION,WAGLE INDUSTRIAL ESTATE, THANE -THANE-MAHARASHTRA INDIA Phone- 022-'66060942 FAX : 022-25820801 Pincode : 400 604 Email : rkadmin@rkcipl.co.in	C&I	For subcritical power plant up to 150MW								HOLD due to non-responsse /non-participation w.e.f. 10.01.2013.HOLD due to non-responsse /non-participation w.e.f. 01.02.2013.Hold is lifted w.e.f. 21.09.2013. , Reassessed on 26.02.2016; Technical limit added w.e.f. 26.02.2016; , ,
197	145-04000-A	CONTROL VALVE	I0006275	M224	Mascot Valves Pvt. Ltd.	, 24AAACV6615P1ZZ	REGULAR	166-167 GIDC Naroda Ahmedabad Phone- 0792282 1619 Pincode : 382330 Email : dom.sales@mascotvalves.com,	Works-1->Varun Patel Dir 166-167 ,GIDC Naroda -Ahmedabad-GUJARAT India Phone- 0792282 1619 / 3369 FAX : Pincode : 382330 Email : dom.sales@mascotvalves.com	C&I			29-Aug-17	96	2		Small	29-Aug-19	, , ,
198	145-04000-A	CONTROL VALVE	I0003064	S163	Severn Glocon India Pvt. Ltd.		REGULAR	F96 & F97, Sipcot Industrial Park, Irungattukottai, Chennai, Phone- 044-47104200, Pincode : 602117, Email : info@severnglocon.co.in,	Works-1->Mr. K.Kaushik, F96 & F97, Sipcot Industrial Park,Irungattukottai, -Chennai-TAMIL NADU India Phone- 044-47104200, FAX : 044-47100073, Pincode : 602117, Email : info@severnglocon.co.in	C&I			29-May-18						, Technical limit reviewed on 30.04.2014 and 12.10.2015; , Deleted due to non-response in 4 consecutive tenders w.e.f. 27.07.2016; Registered again w.e.f. 29.05.2018 ,
199	145-04000-A	CONTROL VALVE	I0000266	F015	EMERSON PROCESS MANAGEMENT CHENNAI LIMITED		REGULAR	147, KARAPAKKAM VILLAGE, CHENNAI Phone- 23722184, 23716242 Pincode : 600096 Email : jatinder.singh@emerson.com	Works-1->Mr. Rangarajan (Head - Lean and Manufact 147,Karapakkam Village, -Chennai-TAMIL NADU India Phone- 0444903 4395 FAX : Pincode : 600097 Email : Rangarajan.M@emerson.com	C&I				69.5	2				Vendor's name changed from "Fisher Sanmar Limited" to "Emersion Process Management Chennai Limited" w.e.f. 22.09.2011 , , ,
200	145-04000-A	CONTROL VALVE	I0006276	B207	BOMAFA SPECIAL VALVE SOLUTIONS PVT LTD	, 24AAECB8265B1ZY	REGULAR	Mr. K.M. Anklesaria/ R. M. Anklesaria Plot No: 285/2, Panchratna Estate, Near Ramol Bridge, Vatva Ahmedabad Phone- 079-40083825 Pincode : 382445 Email : info@bomafa-india.com	Works-1->Mr. K.M. Anklesaria/ Mr. R.M. Anklesaria Dir Plot No: 285/2, Panchratna Estate, Near Ramol Bridge, Vatva, -Ahmedabad-GUJARAT INDIA Phone- 079-40083825 FAX : Pincode : 382445 Email : info@bomafa-india.com	C&I			17-Dec-16				Small	30-Sep-20	, , ,
201	145-04000-A	CONTROL VALVE		S280	SAMSON CONTROLS PVT. LTD.	, 27AACP3331Q1Z6	REGULAR	Mr. Atul raje-MD D 281, MIDC Ranjangaon Ta Shirur Pune Phone- 02067246600 Pincode : 412220 Email : sales@samsoncontrols.net	Works-1-> Others D 281, MIDC Ranjangaon -Pune-MAHARASHTRA India Phone- 02067246600,8554997963 FAX : Pincode : 412220 Email : sales@samsoncontrols.net	C&I			15-Jun-18						"Hydro test bench for 6" to 12", 2500# ANSI rating is available at unit II, D-100 MIDC Ranjangaon, Tal. Shirur, Dist. Pune." , , ,

202	145-04000-A	CONTROL VALVE	I0001844	K048	Koso India Private Limited,	, 27AACCK3621N1ZE	REGULAR	H 33 & 34, MIDC, Ambad, Nashik, Phone-09650233433 Pincode : 422010, Email : jetmal.gour@koso.co.in	Works-1->P.J.ASHOK KUMAR/SEEMA ANAND Control Valve Division, H-33&34, MIDC, Ambad, -Nashik-MAHARASHTRA India Phone- 91 944 744 3198 FAX : 0491 - 5269914 Pincode : 422010 Email : pja@koso.co.in;enquiry@koso.co.in Works-2-> +P.J.ASHOK KUMAR/SEEMA ANAND J-1,MIDC,Ambad -Nashik-MAHARASHTRA India Phone- 91 944 744 3198 FAX : 0491 - 5269914 Pincode : 422010 Email : pja@koso.co.in;enquiry@koso.co.in	C&I			30-Sep-09	95.33	3				, The name has been changed from M/s KOSO FLUID CONTROLS (PVT) LTD to M/s Koso India Private Limited as per 11th MISCC Elect and C&I dated 30.07.2013. , Approved works at Control Valve Division, H-33&34, Ambad, Nashik w.e.f. 12.10.2015; Additional works at "J-1,MIDC,Ambad, nashik-422010" approved w.e.f. 17.06.2016; ,
203	145-04000-A	CONTROL VALVE	I0001845	F030	FORBES MARSHALL ARCA PVT.LTD.	, 27AAACF2630E1Z5	REGULAR	A-34/35 , MIDC ESTATE, H-BLOCK, PIMPRI, PUNE, Phone- 020-27442020, Pincode : 411018 Email : mnadgaundi@forbesmarshall.com	Works-1->Mr. Sanjeev Shinde A-34/35 MIDC Estate,H Block, Pimpri, -Pune-MAHARASHTRA India Phone-9323176406 FAX : 020-27442040 Pincode : 411018 Email : sshinde@forbesmarshall.com	C&I	No technical limit exists except for feed control valve. For feed control valves, approved up to sub-critical power plants of 600 MW rating.		16-Dec-10	80.5	2				, Technical limit reviewed on 30.04.2014 and further revised on 29.12.2015; , Reviewed in MISCC dt. 21.07.2015 for non-response in 4 consecutive tender enquiry; ,
204	145-04000-A	CONTROL VALVE	I0000348	I006	INSTRUMENTATION LTD.	, 32AAACL4212G1Z6	REGULAR	KANJIKODE WEST, PALALKKAD, PALAKKAD Phone- 2566127-130,2567128 Pincode : 678623 Email : icvldl@gmail.com;fa2@ilpgt.com	Works-1->D.SASIDHARAN, AGM(Works&PPC) KANJIKODE WEST, PALAKKAD-KERALA INDIA Phone-0491-2566536 FAX : 0491-2566135 Pincode : 678623 Email : sasidharan@ilpgt.com;mraj@ilpgt.com; giireesh@ilpgt.com, commercial@ilpgt.com; fa2@ilpgt.com; nazeera@ilpgt.com;pkv@ilpgt.com;remith@ilpgt.com	C&I				76	3				SICK PSU. BIFR CASE. , , ,
205	145-04000-A	CONTROL VALVE	I0001846	M005	KSB MIL CONTROLS LTD.	, 32AABCM1515G1Z4	REGULAR	Mr.Jacob Cherian/Mr.Geo Jolly Meladoor, Annamanada P.O. MALA, Thrissur Phone- 0480-2695700 Pincode : 680741 Email : biju.simon@ksb.com	Works-1->Mr.Biju Simon/Mr.Jose Paul Meladoor, Annamanada, -Thrissur-KERALA INDIA Phone- 9447555500 FAX : 91 480 2890952 Pincode : 680741 Email : jose.paul@ksb.com	C&I				79.33	3				, Name changed from MIL Controls limited to KSB MIL Controls limited based on MISCC dated 06.04.2017 , ,
206	145-04000-A	CONTROL VALVE		S237	SUZHOU DELAN ENERGY SCIENCE & TECHNOLOGY CO., LTD.		REGULAR	No 566 Fangqiao Road Caohu Industrial Park, Xiangcheng Economic Development Zone, Suzhou Phone-008618012776062 Pincode : 215143 Email : jeanielei@delan-valve.com	Works-1->Mr. Zong Xin CEO No 566 Fangqiao Road Caohu Industrial Park,Xiangcheng E. Z. -Suzhou-Foreign Country CHINA Phone-008618012776062 FAX : Pincode : 215143 Email : jeanielei@delan-valve.com	C&I			05-Jul-16						, , ,
207	145-04000-A	CONTROL VALVE		W202	WALDEMAR PRUSS ARMATURENFABRIK GMBH		REGULAR	Mr. Winfried Dremhel Schulenburgerlandstrasse 261, Hannover Phone-+49-511279260 Pincode : 30419 Email : dremhel@pruss.de; vogel@pruss.de	Works-1->Mr. Winfried Dremhel CEO Schulenburgerlandstrasse 261, -Hannover- GERMANY Phone- +49-511279260 FAX : Pincode : 30419 Email : dremhel@pruss.de	C&I			25-Feb-15						Indian Representative-M/s H S Engineering & Marketing Services, B2/73C Safdarjung Enclave, New Delhi - 110029, Ph No.-011-26193156/9313007463; Email-joy@hsgroupdelhi.com , , ,
208	145-06000-A	PRESSURE SWITCH/DIFF. PRESSURE SWITCH		K054	Kaustubha Udyog,		REGULAR	S.No. 36/1/1, Sinhgad Road, Vadgaon Khurd, Near Lokmat Press, Pune, Phone- 020-24393577, Pincode : Email :		C&I			28-Mar-13				Small	30-Mar-20	, , ,
209	145-06000-A	PRESSURE SWITCH/DIFF. PRESSURE SWITCH	I0000758	A126	PRECISION MASS PRODUCTS PVT. LTD.		REGULAR	Mr. Nishit Patel/Mr. Anuj Verma Plot No.2306, Phase II, GIDC Chhatral Kalol Phone- 9999464663 Pincode : 382729 Email : sales@precisionmass.com	Works-1->Mr. Hitesh Parmar/Mr. Hitesh Parmar Plot No.2306, Phase II, GIDC Chhatral, -Kalol-GUJARAT INDIA Phone- 9327359227 FAX : 02764-233440 Pincode : 382729 Email : hitesh.parmar@ashcroftindia.com	C&I			23-Nov-12						Registration of "M/s Ashcroft India Pvt. Ltd." substituted to "M/s Precision Mass Products Pvt. Ltd." as per MISCC dt. 15.02.2016 based on "Termination and business transfer agreement" submitted by supplier. , , ,
210	145-06000-A	PRESSURE SWITCH/DIFF. PRESSURE SWITCH	I0000758	D021	DRESSER INDUSTRIES INC.		REGULAR	Mr. Nishit Patel/Mr. Anuj Verma Plot No.2306, Phase II, GIDC Chhatral Kalol Phone- 02764-233682 Pincode : 382729 Email : Nishit.patel@ashcroftindia.com		C&I									, , ,
211	145-06000-A	PRESSURE SWITCH/DIFF. PRESSURE SWITCH	I0001570	S009	SWITZER PROCESS INSTRUMENTS PVT. LTD.	, 33AAUCS4408B1ZH	REGULAR	Mr. V S Jayaprakash, 128, SIDCO North Phase, Ambattur Estates CHENNAI Phone- 044-26252017/2018 Pincode : 600050 Email : sales@switzerprocess.co.in	Works-1->C S Shankar 127, Sidco North Phase, Ambattur Estates, -CHENNAI-TAMIL NADU INDIA Phone-8754491904 FAX : 044-26248849 Pincode : 600050 Email : cservice@switzerinstrument.com	C&I				66	1		Small	20-May-19	Name changed from "M/s Switzer Instrument Ltd." to "M/s Switzer Process Instruments Pvt. Ltd." w.e.f. 27.07.2016; , , ,

212	145-06000-A	PRESSURE SWITCH/DIFF. PRESSURE SWITCH		S010	SOR INC.		REGULAR	LARRY DEGARMO/Avdhesh Chandra, 14685 W. 105TH STREET LENEXA Phone- 09810905139, Pincode : 66215 Email : Ldegarmo@sorinc.com, avdhesh@sherman-india.com,	Works-1->LARRY DEGARMO/ ROY STUMBOUGH 14685 W. 105TH STREET, LENEXA -KANSAS- USA Phone 913-888-0767 FAX : 913-888-0767 Pincode : 66215 Email : rstumbough@sorinc.com	C&I									, , ,
213	145-06000-A	PRESSURE SWITCH/DIFF. PRESSURE SWITCH		B085	Barksdale GmbH, Germany		REGULAR	Michael Wellerder Dorn Assenheimer, Strasse 27 Reichelsheim Phone- +91-9999107840 Pincode : D-61203 Email : msingh@barksdale.de		C&I			01-Sep-10						, , ,
214	145-06000-A	PRESSURE SWITCH/DIFF. PRESSURE SWITCH		G060	GENERAL INSTRUMENTS CONSORTIUM		REGULAR	Mr. Amarendra Kulkarni 194/195, Gopi Tank Road, Off. Pandurang Naik Marg, Mahim Mumbai Phone- 9323195251 Pincode : 400016 Email : amarendra@general-gauges.com		C&I			30-Sep-10	64.67	3				Workas at- GAUGES BOURDON INDIA PVT. LTD. (A MFG. UNIT OF GENERAL INSTRUMENTS CONSORTIUM , PLOT NO-4, 5 & 6, JAWAHAR Co-op. INDUSTRIAL ESTATE, KAMOTHE, PANVEL- 410 209 , , ,
215	145-06000-A	PRESSURE SWITCH/DIFF. PRESSURE SWITCH		I041	INDFOS INDUSTRIES LIMITED		REGULAR	B-20-21, INDUSTRIAL AREA, MEERUT ROAD, GHAZIABAD Phone- 0120-2712016 Pincode : Email : mktg@indfos.com		C&I				67.67	3				, , ,
216	145-06000-A	PRESSURE SWITCH/DIFF. PRESSURE SWITCH	I0001139	D003	INDFOS (INDIA) LIMITED		REGULAR	MR.L.C.VENKATRANGAN/ MR.B.KANNAN New No.17 II Floor, Adwave Towers, Dr.Sevalia Shivaji Salai, T.Nagar Chennai Phone- +91 44 24353407 Pincode : 600017 Email : delhi@indfos.com		C&I									, , ,
217	145-08000-A	PRESSURE GAUGE/ DIFF.PRESSURE GAUGE	I0002107	A010	A.N. INSTRUMENTS PVT. LTD.		REGULAR	MARKETING DIVISION, 5th FLOOR, 59-B, CHOWRINGHEE ROAD, KOLKATA Phone- 24757784,22472509 Pincode : 700020 Email : anidel@bol.net.in	Works-1->Mr. Gautam Mukherjee Kusumba,Sonarpur Station Road,P.O. -Narendrapur, -Kolkata-WEST BENGAL INDIA Phone- 9836878855 FAX : 033-24342748 Pincode : 700103 Email : gkm_ani@hotmail.com	C&I				60	1		Micro	30-Sep-15	, , ,
218	145-08000-A	PRESSURE GAUGE/ DIFF.PRESSURE GAUGE	I0006354	B083	BOSE PANDA INSTRUMENTS PVT.LTD.	, 19AABCB1292KIZ	REGULAR	Mr. Partha Bose 44, Saheed Hemanta Kumar Bose, Sarani, Kolkata Phone- +91 33 2548 7220 Pincode : 700074 Email : parthabosebpi@gmail.com ; bosepanda@vsnl.net	Works-1->Mr. Partha Bose 44, Saheed Hemanta Kumar Bose,Sarani, -Kolkata-WEST BENGAL India Phone- +91 33 2548 7220 FAX : +91 33 2548 0429, Pincode : 700074 Email : parthabosebpi@gmail.com bosepanda@vsnl.net	C&I			20-Aug-14				Small	12-Jan-19	Trial to Hold as per SEARP amd-3,w.e.f. 15-09-12 , Supplier registered in trial category on 30.10.2010 and was thereafter put in susp-hold category as per SEARP Amd-03 on 15.09.2012. Further, on evaluation put in permanent category on 29.08.2014;
219	145-08000-A	PRESSURE GAUGE/ DIFF.PRESSURE GAUGE	I0002106	H023	H.GURU INDUSTRIES		REGULAR	Mr. G. D. Hazra/Mr. P. K. Mitra 10 B, HO-CHI-MINH SARANI, KOLKATA Phone- 033 2282 2463 / 1637 Pincode : 700071 Email : mguru@vsnl.net	Works-1->NA NA -- Phone- FAX : Pincode : Email :	C&I		OVERALL PENDING ORDER VALUE (EXCLUDING VALUE OF ORDERS ALREADY EXECUTED) FOR ALL PACKAGES FOR WHICH VENDOR IS REGISTERED SHALL NOT EXCEED RS. 1.0 CRORE							, Financial limit reviewed on 05.06.2014; , ,
220	145-08000-A	PRESSURE GAUGE/ DIFF.PRESSURE GAUGE	I0002108	G071	GAUGE BOURDON INDIA PVT. LTD.	, 27AACG1986A1ZV	REGULAR	194/195, Gopi Tank Road, Off Pandurang Naik Marg, Mahim Mumbai, Phone-011-41607463, Pincode : 400016, Email : gicdelhi@general-gauges.com,	Works-1->Gauge Bourdon India Pvt. Ltd., Plot No-4, 5, 6,Jawahar Co-operative Industrial Estate, -Kalamboli Taluka Panvel-MAHARASHTRA India Phone- 022-27421095, FAX : 022-27421901, Pincode : 410209, Email : info@general-gauges.com	C&I			06-Mar-14				Small	11-Jun-18	Registered as per 26th MISCC-Electrical and C&I dtd. 06.03.2014. , , ,
221	145-08000-A	PRESSURE GAUGE/ DIFF.PRESSURE GAUGE	I0006454	F016	FORBES MARSHALL (HYD) LTD.		REGULAR	MR SAILESH PATALAY/MR M K SRINIVASAN PLOT NO.A-19/2, & T-4/2, IDA NACHARAM, HYDERABAD Phone- 9849913704 Pincode : 500 076 Email : mksrinivasan@forbesmarshall.com	Works-1->MR G.SRINIVASAN/MR ANUJ MALPANI PLOT NO:A-19/2 & T-4/2,I.DA. NACHARAM , -HYDERABAD-TELANGANA INDIA Phone- 09866550762 FAX : 040 27152193 Pincode : 560076 Email : gshrinivasan@forbesmarshall.com	C&I									, , ,
222	145-08000-A	PRESSURE GAUGE/ DIFF.PRESSURE GAUGE	I0000758	A126	PRECISION MASS PRODUCTS PVT. LTD.		REGULAR	Mr. Nishit Patel/Mr. Anuj Verma Plot No.2306, Phase II, GIDC Chhatral Kalol Phone- 9999464663 Pincode : 382729 Email : sales@precisionmass.com	Works-1->Mr. Hitesh Parmar/Mr. Hitesh Parmar Plot No.2306, Phase II, GIDC Chhatral, -Kalol-GUJARAT INDIA Phone- 9327359227 FAX : 02764-233440 Pincode : 382729 Email : hitesh.parmar@ashcroftindia.com	C&I			23-Nov-12						Registration of "M/s Ashcroft India Pvt. Ltd." substituted to "M/s Precision Mass Products Pvt. Ltd." as per MISCC dt. 15.02.2016 based on "Termination and business transfer agreement" submitted by supplier. , , ,

223	145-08000-A	PRESSURE GAUGE/ DIFF.PRESSURE GAUGE	I0000007	W017	Baumer Technologies India Pvt. Ltd.		REGULAR	Mr. Shyam Warilani/Mr. V Suresh Babu 36, DAMJI SHAMJI INDUSTRIAL COMPLEX, OFF.- MAHAKALI CAVES ROAD, ANDHERI(E) MUMBAI Phone- +91 99589 25151 Pincode : 400093 Email : sales.in@baumer.com	Works-1->Mr. Shyam Warilani/Mr. V Suresh Babu Plot No 34 À GIDC À Phase 1, -VAPI-GUJARAT INDIA Phone- +91 11 4161 7111 FAX : 022 2687 3613 Pincode : 396 195 Email : pbajaj@baumer.com	C&I									, , NAME HAS BEEN CHANGED FROM M/S WAAREE INSTRUMENTS LTD. TO M/S BAUMER TECHNOLOGIES INDIA PVT. LTD. W.E.F. 13.06.2012 , ,
224	145-08000-A	PRESSURE GAUGE/ DIFF.PRESSURE GAUGE	I0001117	H040	H.GURU INSTRUMENTS (SOUTH INDIA) P. LTD		REGULAR	32,INDUSTRIAL SUBURB YESWANTHAPUR BANGALORE Phone- 080-23370300, Pincode : 560022 Email : info@hgurusouth.com	Works-1->Shikha Hazra/ Shyamal Hazra 32, Industrial Suburb,Yeshwanthpur -BANGALORE-KARNATAKA INDIA Phone- 080-23370300 FAX : 080-23379890 Pincode : 560022 Email : shikhahazra@hgurusouth.com	C&I			30-Jul-10	83	3		Small	30-Sep-18	, , ,
225	145-08000-A	PRESSURE GAUGE/ DIFF.PRESSURE GAUGE	I0002862	S158	SCIENTIFIC DEVICES (BOMBAY) PVT LTD,		REGULAR	Office no. 53, Shree Manoshi Complex, Plot No. 5 & 6, Sec-3, Ghansoli (East), Navi Mumbai, Phone- 9892230623, Pincode : 400 701, Email : sdbpl@vsnl.com	Works-1->Scientific Center, Others By-Pass Junction,Near Kalsekar College kausa, mumbra,Thane -Mumbai-MAHARASHTRA INDIA Phone- 022-25491409,9892230623 FAX : Pincode : 400612 Email : sdbpl@vsnl.com	C&I			31-May-17				Small	22-Feb-21	, , ,
226	145-08000-A	PRESSURE GAUGE/ DIFF.PRESSURE GAUGE	I0006231	N214	Nesstech Instruments Private Limited		REGULAR	26/2, G Type, Global Industrial Park Near Nahuli Railway Crossing, Valvada Vapi Phone- 9920576002 Pincode : 396105 Email : sales@nesstech.co.in	Works-1-> Others 26/2, G Type, Global Ind. Park Near Nahuli Railway Crossing, -Vapi-GUJARAT INDIA Phone- 9920576002 FAX : Pincode : 396105 Email : sales@nesstech.co.in, bkapadia@nesstech.co.in	C&I			11-May-17						, , ,
227	145-10000-A	TEMPERATURE GAUGE	I0002108	G071	GAUGE BOURDON INDIA PVT. LTD.	, 27AAACG1986A1ZV	REGULAR	194/195, Gopi Tank Road, Off Pandurang Naik Marg, Mahim Mumbai, Phone- 011-41607463, Pincode : 400016, Email : gicdelhi@general-gauges.com,	Works-1->Gauge Bourdon India Pvt. Ltd., Plot No-4, 5, 6,Jawahar Co-operative Industrial Estate, -Kalamboli Taluka Panvel-MAHARASHTRA India Phone- 022-27421095, FAX : 022-27421901, Pincode : 410209, Email : info@general-gauges.com	C&I			28-Mar-13				Small	11-Jun-18	, , ,
228	145-10000-A	TEMPERATURE GAUGE	I0001117	H040	H.GURU INSTRUMENTS (SOUTH INDIA) P. LTD		REGULAR	32,INDUSTRIAL SUBURB YESWANTHAPUR BANGALORE Phone- 080-23370300, Pincode : 560022 Email : info@hgurusouth.com	Works-1->Shikha Hazra/ Shyamal Hazra 32, Industrial Suburb,Yeshwanthpur -BANGALORE-KARNATAKA INDIA Phone- 080-23370300 FAX : 080-23379890 Pincode : 560022 Email : shikhahazra@hgurusouth.com	C&I			30-Jul-10	96.33	3		Small	30-Sep-18	, , ,
229	145-10000-A	TEMPERATURE GAUGE	I0002106	H023	H.GURU INDUSTRIES		REGULAR	Mr. G. D. Hazra/Mr. P. K. Mitra 10 B, HO-CHI-MINH SARANI, KOLKATA Phone- 033 2282 2463 / 1637 Pincode : 700071 Email : mguru@vsnl.net	Works-1->NA NA -- Phone- FAX : Pincode : Email :	C&I		OVERALL PENDING ORDER VALUE (EXCLUDING VALUE OF ORDERS ALREADY EXECUTED) FOR ALL PACKAGES FOR WHICH VENDOR IS REGISTERED SHALL NOT EXCEED RS. 1.0 CRORE							, Financial limit reviewed on 05.06.2014; , ,
230	145-10000-A	TEMPERATURE GAUGE	I0001567	G047	GOA THERMOSTATIC INSTRUMENTS PVT.LTD.	, 30AAACG7071Q1ZF	REGULAR	FLAT -B , GF, HILL CROWN APTS., COLLEGE ROAD, MAPUSA Phone- Pincode : 403525 Email : gtilworks@pyro-electric.in	Works-1->Mrs Saanvi Naik BICHOLIM, -BICHOLIM-GOA INDIA Phone- 9595855152 FAX : Pincode : 403 529 Email : saanvi.naik@thermostatic.in	C&I			30-Jul-10	82.5	2				, , ,
231	145-10000-A	TEMPERATURE GAUGE	I0002107	A010	A.N. INSTRUMENTS PVT. LTD.		REGULAR	MARKETING DIVISION, 5th FLOOR, 59-B, CHOWRINGHEE ROAD, KOLKATA Phone- 24757794,22472509 Pincode : 700020 Email : anidel@bol.net.in	Works-1->Mr. Gautam Mukherjee Kusumba,Sonarpur Station Road,P.O. - Narendrapur, -Kolkata-WEST BENGAL INDIA Phone- 9836878855 FAX : 033 24342748 Pincode : 700103 Email : gkm_ani@hotmail.com	C&I				64.67	3		Micro	30-Sep-15	, , ,
232	145-10000-A	TEMPERATURE GAUGE	I0006454	F016	FORBES MARSHALL (HYD) LTD.		REGULAR	MR SAILESH PATALAY/MR M K SRINIVASAN PLOT NO.A-19/2, & T-4/2, IDA NACHARAM, HYDERABAD Phone- 9849913704 Pincode : 500 076 Email : mksrinivasan@forbesmarshall.com	Works-1->MR G.SRINIVASAN/MR ANUJ MALPANI PLOT NO:A-19/2 & T-4/2,I.DA. NACHARAM , -HYDERABAD-TELANGANA INDIA Phone- 09866550762 FAX : 040 27152193 Pincode : 560076 Email : gshrinivasan@forbesmarshall.com	C&I									, , ,
233	145-10000-A	TEMPERATURE GAUGE	I0001442	G032	GOA INSTRUMENTS INDUSTRIES PVT.LTD.,	, 30AAACG7071Q1ZF	REGULAR	D2/5, Mapusa Industrial Estate, Mapusa, Goa, Phone- 09326054551, Pincode : 403507, Email : sumukh@goainstruments.com	Works-1->Mr. S.G. Dixit D2/5, Mapusa Industrial Estate, -Mapusa-GOA INDIA Phone- 09326054551 FAX : 0832-2262331 Pincode : 403 507 Email : sumukh@goainstruments.com	C&I				54	1		Small	30-Sep-18	GCC Rev.5 has been accepted in toto. , , ,

234	145-10000-A	TEMPERATURE GAUGE	I0000758	A126	PRECISION MASS PRODUCTS PVT. LTD.		REGULAR	Mr. Nishit Patel/Mr. Anuj Verma Plot No.2306, Phase II, GIDC Chhatral Kalol Phone- 9999464663 Pincode : 382729 Email : sales@precisionmass.com	Works-1->Mr. Hitesh Parmar/Mr. Hitesh Parmar Plot No.2306, Phase II, GIDC Chhatral, -Kalol-GUJARAT INDIA Phone- 9327359227 FAX : 02764-233440 Pincode : 382729 Email : hitesh.parmar@ashcroftindia.com	C&I			23-Nov-12						Registration of "M/s Ashcroft India Pvt. Ltd." substituted to "M/s Precision Mass Products Pvt. Ltd." as per MISCC dt. 15.02.2016 based on "Termination and business transfer agreement" submitted by supplier. , , ,
235	145-10000-A	TEMPERATURE GAUGE	I0000007	W017	Baumer Technologies India Pvt. Ltd.		REGULAR	Mr. Shyam Warilani/Mr. V Suresh Babu 36, DAMJI SHAMJI INDUSTRIAL COMPLEX, OFF.- MAHAKALI CAVES ROAD, ANDHERI(E) MUMBAI Phone- +91 99589 25151 Pincode : 400093 Email : sales.in@baumer.com	Works-1->Mr. Shyam Warilani/Mr. V Suresh Babu Plot No 34 Â GIDC Â Phase 1, -VAPI-GUJARAT INDIA Phone- +91 11 4161 7111 FAX : 022 2687 3613 Pincode : 396 195 Email : pbajaj@baumer.com	C&I				71	3				, NAME HAS BEEN CHANGED FROM M/S WAAREE INSTRUMENTS LTD. TO M/S BAUMER TECHNOLOGIES INDIA PVT. LTD. W.E.F. 13.06.2012 , ,
236	145-11000-A	LEVEL GAUGE		T001	TOSHNIWAL BROTHERS PVT.LTD.		REGULAR	WORKS:TOSHNIWAL IND.PVT.LTD, INDUSTRIAL ESTATE MAKHUPURA, AJMER Phone- 441171 Pincode : 305002 Email : toshniwalprocess@gmail.com		C&I	MAKE:NIVO CONTROLS									, , ,
237	145-11000-A	LEVEL GAUGE	I0002058	B077	BLISS ANAND PVT. LTD.	, 06AACCB4798B1ZU	REGULAR	Mr. Vikas Anand/ Mr.R.GRajan 92B & 93 B , IMT MANESAR Gurgaon Phone- 0124-4366000 TO 9 Pincode : 122001 Email : sales@blissanand.com	Works-1->Mr. Bharat Kumar/ Mr. Sas Kumar Plot No. 92B & 93B,Sec-V, IMTManesar -GURGAON-HARYANA INDIA Phone- 0124-4366000 TO 9 FAX : 0124-2290884 Pincode : 122002 Email : bharat@blissanand.com	C&I									, , ,
238	145-11000-A	LEVEL GAUGE	I0001569	S008	SIGMA INSTRUMENTS CO.	, 27AANFS3261N1ZL	REGULAR	Gopal Kannan/R Gopinath 201, ANANDRAJ INDUSTRIAL ESTATE, OFF.LBS MARG, SONAPUR LANE, BHANDUP (W) MUMBAI Phone- +919821038162 Pincode : 400078 Email : sales@sigmainstruments.co.in	Works-1->R Gopinath 27 Nahur Udyog Industrial Premises,M.M.Malviya Road, Mulund(-MUMBAI-MAHARASHTRA INDIA Phone- +912225918567 FAX : +912225918566 Pincode : 400080 Email : sales@sigmainstruments.co.in	C&I									, , ,
239	145-12000-A	FLOW ELEMENT		T108	TM TECNOMATIC SPA		REGULAR	MR. ANTONIO NOVIELLO/Mrs. Enrica Bazzocc VIA DELLE INDUSTRIE, 36 CREMONA Phone- 39037221574 Pincode : 26100 Email : info@tmtecnomatic.com	Works-1->Mrs. Enrica Bazzocchi VIA DELLE INDUSTRIE, 36, -CREMONA-Italy Phone- 39037221574 FAX : 39037228318 Pincode : 26100 Email : sales@tmtecnomatic.com	C&I			22-Dec-11						, , ,
240	145-12000-A	FLOW ELEMENT	I0002958	S044	STAR-MECH CONTROLS (I) PVT.LTD.	, 27AACCS5874R1ZF	REGULAR	SUSHILLOTAM, SUSHILLOTAM, 29/3A/3, SASANE NAGAR, HADAPSAR, PUNE Phone- 02026970450 Pincode : 411028 Email : marketing@starmech.net	Works-1->VIVEK GOTE/ MAHENDRA BANSODE Sr no.54, Plot No.80,Swami VIVekanand Industrial Est.HADAPS - PUNE-MAHARASHTRA INDIA Phone- 02026970450 FAX : 02026970470 Pincode : 411028 Email : marketing@starmech.net	C&I				68	3		Small	30-Sep-20	, , ,
241	145-12000-A	FLOW ELEMENT	I0000348	I006	INSTRUMENTATION LTD.	, 32AAACL4212G1Z6	REGULAR	KANJIKODE WEST, PALALKKAD, PALAKKAD Phone- 2566127-130,2567128 Pincode : 678623 Email : icvldil@gmail.com;fa2@ilpgt.com		C&I				75.67	3					SICK PSU. BIFR CASE. , , ,
242	145-12000-A	FLOW ELEMENT	I0001883	M009	MICRO PRECISION PRODUCTS PVT. LTD.	, 06AACM8433C1ZT	REGULAR	Mr. Anil Bhati, H.B. No.-40, Revenue Estate, Village-Dudhola,Tehsil & Distt. Palwal FARIDABAD Phone 9560742713;095607427 Pincode : 121002 Email : anil.bhati@wika.com		C&I				87.67	3		Small	21-Sep-14	REGISTERED AS MSED VENDOR W.E.F.15.11.2011 FOR FY 2011-12. , , ,
243	145-13000-A	TEMP. ELEMENT	I0000225	I022	DETRIVE INSTRUMENTATION & ELECTRONICS LTD.	, 27AACD0722H1Z4	REGULAR	320, TV INDUSTIAL ESTATE, OFF.DR.A.BESANT ROAD, BEHIND GLAXO, WORLI, MUMBAI Phone- 24934125,24938403 Pincode : 400025 Email : trivtech@vsnl.com	Works-1->Mr. A.D.Solomon J-14, MIDC, TARAPORE, BOISER STN., -THANE-MAHARASHTRA India Phone- FAX : Pincode : Email : trivtech@vsnl.com	C&I				66.67	3				, , ,
244	145-13000-A	TEMP. ELEMENT	I0006231	N214	Nesstech Instruments Private Limited		REGULAR	26/2, G Type, Global Industrial Park Near Nahuli Railway Crossing, Valvada Vapi Phone- 9920576002 Pincode : 396105 Email : sales@nesstech.co.in	Works-1-> Others 26/2, G Type, Global Ind. Park Near Nahuli Railway Crossing, -Vapi-GUJARAT INDIA Phone- 9920576002 FAX : Pincode : 396105 Email : sales@nesstech.co.in, bkapadia@nesstech.co.in	C&I			11-May-17						, , ,
245	145-13000-A	TEMP. ELEMENT	I0002955	T115	Thermal Instrument India Pvt. Ltd.	, 27AABCT2768A1ZJ	REGULAR	Mr. Raghavendra M. Kulkarni 194/195, Gopi Tank Road Behind Citylight Cinema,Mahim Mumbai Phone- 09322664709 Pincode : 400016 Email :	Works-1->Mr. Raghavendra M. Kulkarni Survey No. 250A/B, Post-Mangaon,Tal.- Kudal, Dist.- Sindhudurg, --MAHARASHTRA India Phone- 09322664709 FAX : 022-24455026 Pincode : 416519 Email : ramk@giconindia.com	C&I			20-Sep-14						Registered as per 11th MISCC-Electrical and C&I (FY 2014-15) dt. 20.09.2014. , , ,

246	145-13000-A	TEMP. ELEMENT	I0001361	T107	Tempsens Instrument (I) Pvt Ltd		REGULAR	MR. V.P.RATHI,/MR. HEMANT RATHI B-188A ROAD NO.5 , M.I.A UDAIPUR Phone- 09352420069 Pincode : 313003 Email : info@tempsens.com	Works-1->Mr. S.D Deval B-188A ROAD NO.5 ,M.I.A -UDAIPUR-RAJASTHAN INDIA Phone- 9352501530 FAX : 0294-3057750 Pincode : 313003 Email : deval@tempsens.com	C&I			30-Nov-11						, , ,
247	145-13000-A	TEMP. ELEMENT	I0000007	W017	Baumer Technologies India Pvt. Ltd.		REGULAR	Mr. Shyam Warilani/Mr. V Suresh Babu 36, DAMJI SHAMJI INDUSTRIAL COMPLEX, OFF.-MAHAKALI CAVES ROAD, ANDHERI(E) MUMBAI Phone- +91 99589 25151 Pincode : 400093 Email : sales.in@baumer.com	Works-1->Mr. Shyam Warilani/Mr. V Suresh Babu Plot No 34 Â GIDC Â Phase 1, -VAPI-GUJARAT INDIA Phone- +91 11 4161 7111 FAX : 022 2687 3613 Pincode : 396 195 Email : pbajaj@baumer.com	C&I									, NAME HAS BEEN CHANGED FROM M/S WAAREE INSTRUMENTS LTD. TO M/S BAUMER TECHNOLOGIES INDIA PVT. LTD. W.E.F. 13.06.2012 , ,
248	145-13000-A	TEMP. ELEMENT	I0002116	P061	PYRO ELECTRIC INSTRUMENTS GOA PVT.LTD.		REGULAR	M. D. BICHU/R. M. BICHU G.B, HILL CROWN APARTMENTS, COLLEGE ROAD, MAPUSA Phone- 9326114601 Pincode : 403507 Email : priyanka.marketing@pyro-electric.in	Works-1->A A KULKARNI/ VINOD C G PLOT NO. 71,BICHOLIM INDUSTRIAL ESTATE -BICHOLIM-GOA INDIA Phone- 9326114409 FAX : 91 832 2363381 Pincode : 403529 Email : pyroworks@pyro-electric.in	C&I			28-Jan-09	78.33	3				, , ,
249	145-13000-A	TEMP. ELEMENT	I0002108	G071	GAUGE BOURDON INDIA PVT. LTD.	, 27AACG1986A1ZV	REGULAR	194/195, Gopi Tank Road, Off Pandurang Naik Marg, Mahim Mumbai, Phone- 011-41607463, Pincode : 400016, Email : gicdelhi@general-gauges.com,	Works-1->Gauge Bourdon India Pvt. Ltd., Plot No-4, 5, 6,Jawahar Co-operative Industrial Estate, -Kalamboli Taluka Panvel-MAHARASHTRA India Phone- 022-27421095, FAX : 022-27421901, Pincode : 410209, Email : info@general-gauges.com	C&I			29-Dec-15				Small	11-Jun-18	, , ,
250	145-13000-A	TEMP. ELEMENT	I0001442	G032	GOA INSTRUMENTS INDUSTRIES PVT.LTD.,	, 30AACG7071Q1ZF	REGULAR	D2/5, Mapusa Industrial Estate, Mapusa, Goa, Phone- 09326054551, Pincode : 403507, Email : sumukh@goainstruments.com,	Works-1->Mr. S.G. Dixit D2/5, Mapusa Industrial Estate, -Mapusa-GOA INDIA Phone- 09326054551 FAX : 0832-2262331 Pincode : 403 507 Email : sumukh@goainstruments.com	C&I			09-May-13				Small	30-Sep-18	GCC Rev.5 has been accepted in toto. , , ,
251	145-13000-A	TEMP. ELEMENT	I0001645	T111	TOSHNIWAL INDUSTRIES PVT. LTD.,	, 08AACT1582B1ZO	REGULAR	Industrial Estate, Makhupura, Ajmer, Phone- 9352009000, Pincode : 305002, Email : info@tipl.com,	Works-1-> Khasra No.: 218-230& 235, Industrial Estate,Makhupura, -Ajmer-RAJASTHAN India Phone- 9887865856, FAX : 0145-2695174, Pincode : 305002, Email : rajeev.gupta@tipl.com	C&I			28-May-13						GCC Rev.5 has been accepted in toto. , , ,
252	145-13000-A	TEMP. ELEMENT	I0002862	S158	SCIENTIFIC DEVICES (BOMBAY) PVT LTD,		REGULAR	Office no. 53, Shree Manoshi Complex, Plot No. 5 & 6, Sec-3, Ghansoli (East), Navi Mumbai, Phone- 9892230623, Pincode : 400 701, Email :	Works-1->Scientific Center, Others By-Pass Junction,Near Kalsekar College kausa, mumbra,Thane -Mumbai-MAHARASHTRA INDIA Phone- 022-25491409,9892230623 FAX : Pincode : 400612 Email : sdlbpl@vsnl.com	C&I			31-May-17				Small	22-Feb-21	, , ,
253	145-14000-A	TRANSMITTERS	I0004041	V040	V. AUTOMAT & INTRUMENTS, (P) LTD.	07AACV0542K1ZF	REGULAR	Mr. R. K. BASSI/Mr. PRAVEEN KUMAR F-61, OKHLA INDL.AREA, PH-1 NEW DELHI Phone- 9810005826 Pincode : 110 020 Email : sales@vautomat.com	Works-1->Mr. BHAGWAN SINGH/ Mr. NANDAN SINGH F-61, OKHLA INDL.AREA,PHASE-I -NEW DELHI-DELHI INDIA Phone- 011-47627200 Extn. 3 FAX : 011- 26819440 Pincode : 110 020 Email : production@vautomat.com	C&I	a)DISPLACEMENT TYPE TRANSMITTERS. b)PRESSURE AND DP TRANSMITTERS		28-Jan-09						Technical limit reviewed on 12.10.2015; , Technical limit reviewed on 30.04.2014 , ,
254	145-14000-A	TRANSMITTERS	I0001494	P068	Pune Techtrol Pvt. Ltd.	, 27AABCP1274H1ZI	REGULAR	N.P.Khatan/Sudhakar Badiger S-18, MIDC Bhosari, Pune Phone- 9850560042 Pincode : 411 026 Email :		C&I	Only for capacitance Type Level Transmitter		07-Oct-14	70	2				Technical limit reviewed on 12.10.2015; , Manufacturing works: J-52/7, MIDC, Bhosari, Pune , ,
255	145-14000-A	TRANSMITTERS	I0002071	B049	ABB INDIA LIMITED	, 29AAACA3834B1Z4	REGULAR	MR. RAJIV GOVIL 14, MATHURA ROAD, FARIDABAD Phone- 09971085678 Pincode : 121003 Email : vipin.swami@in.abb.com		C&I	PRESSURE TRANSMITTER, DP TRANSMITTER and TEMP TRANSMITTER			89.67	3				(1) A GROUP COMPANY OF ABB, NOW. (2) NAME OF VENDOR CHANGED FROM BIRLA-KENT TAYLOR LIMITED TO ABB LIMITED W.E.F. 27.06.2011 , Technical limit reviewed and changed on 05.06.2014; Technical limit further reviewed on 12.10.2015; , Name changed from ABB Limited to ABB India Limited on 23.08.2018 as per 16th MISCC- Electrical and C& ,
256	145-14000-A	TRANSMITTERS	I0001001	P082	PANAM ENGINEERS		REGULAR	Mr. Santosh Shukla 203, Jaisingh Business,Parsiwada, Saha road,Andheri(East), Mumbai, Phone- 9892179529, Pincode : 400099, Email : santosh@panamengineers.com,	Works-1->Mr. Santosh Shukla Others R-628,TTC Industrial Area, MIDC Rabale, -Navi Mumbai-MAHARASHTRA India Phone- 9821350761, FAX : 022-27695559, Pincode : 400701, Email : sales@panamengineers.com	C&I	For Pressure and Diff. Pressure transmitter		20-Aug-15						, , ,
257	145-14000-A	TRANSMITTERS	I0000012	Y10	YOKOGAWA INDIA LIMITED,		REGULAR	PLOT NO.96, ELECTRONICS CITY COMPLEX, HOSUR ROAD, BANGALORE, Phone- 080-41586000, Pincode : Email : uday.shankar@in.yokogawa.com	Works-1-> PLOT NO.96, ELECTRONICS CITY COMPLEX, HOSUR ROAD, -BANGALORE-KARNATAKA INDIA Phone- 080-41586000, FAX : 080-28521442, Pincode : Email : uday.shankar@in.yokogawa.com	C&I			14-Jun-13						Subject to submission of renewed ISO certificate & compliance to GCC; Relevant documents (ISO 9001:2008 and GCC Rev-05) furnished on 18.06.2013. , , ,

258	145-14000-A	TRANSMITTERS	I0001645	T111	TOSHNIWAL INDUSTRIES PVT. LTD.,	, 08AACT1582B1ZO	REGULAR	Industrial Estate, Makhupura, Ajmer, Phone- 9352009000, Pincode : 305002, Email : info@tipl.com,	Works-1-> Khasra No.: 218-230& 235, Industrial Estate,Makhupura, -Ajmer-RAJASTHAN India Phone- 9887865856, FAX : 0145-2695174, Pincode : 305002, Email : rajeev.gupta@tipl.com	C&I			28-May-13						GCC Rev.5 has been accepted in toto. , , ,
259	145-14000-A	TRANSMITTERS	I0002062	S106	SBEM PVT. LTD.		REGULAR	MR.N.K. BEDARKAR/MR. VISHWANATH KARANDIK 39, ELECTRONIC CO.OP. ESTATE, PUNE SATARA ROAD PUNE, Phone- 912041030100 Pincode : 411009 Email : newdelhi@sbem.co.in	Works-1->MR. MOHAN PADWAL 691/A/2,BIBWEWADI INDL ESTATE - PUNE-MAHARASHTRA INDIA Phone- 918600042374 FAX : 912024215670 Pincode : 411037 Email : wm@sbem.co.in	C&I	FOR CAPACITANCE TYPE.		31-May-11						Reviewed in MISCC dt. 21.07.2015 for non-response in 4 consecutive tender enquiry; , Technical limit reviewed on 30.04.2014 & 12.10.2015; , ,
260	145-14000-A	TRANSMITTERS		E057	Endress + Hauser (India) Pvt. Ltd.,		REGULAR	Mr. Prakash Vaghela 215-216, DLF Tower 'A', Jasola District Centre, New Delhi, Phone- 9717593001, Pincode : 110025, Email : prakash.vaghela@in.endress.com,	Works-1-> M-171 to 173, MIDC, Waluj, -Aurangabad-MAHARASHTRA India Phone- 9881000474, FAX : 0240-2555179, Pincode : 431136, Email : Narendra.Kulkarni@wetzer.endress.com	C&I	"Except Displacement Type Level Transmitters"		24-Oct-13						, Technical Limit reviewed and changed from "For temperature transmitter only" to "Except Displacement Type Level Transmitters" w.e.f. from 21.03.2018 , ,
261	145-14000-A	TRANSMITTERS		M091	Moore Industries International Inc.		REGULAR	Leonard.W. Moore/ Matt Moren 16650 Schoenborn St. North Hills Phone- +1 818 830 5548 Pincode : 91343 Email : mmoren@miinet.com	Works-1->Matt Moren/Gina Cruz 16650 Schoenborn St., North Hills - CALIFORNIA- USA Phone- +1 818 894 7111, ext FAX : +1 818 830 5588 Pincode : 91343 Email : gcruz@miinet.com	C&I			24-Aug-11						INDIAN REPRESENTATIVE: CHEMTROL INDUSTRIES LTD, , ,
262	145-14000-A	TRANSMITTERS	I0000270	R002	EMERSON PROCESS MANAGEMENT (INDIA) PVT.LTD.	, 27AACF1667M1ZD	REGULAR	Mr. Amit Paithankar/Vikram Raj Singh 206-210,BALARAMA BUILDING 2ND FLR. BANDRA EAST MUMBAI Phone- 9619121500 Pincode : 400051 Email : vikramraj.singh@emerson.com	Works-1->Kalpesh Chandan/Hrishikesh Aghor Plot No. A 145/4 TTC IND AREA,MIDC, PAWANE, NAVI MUMBAI-MAHARASHTRA INDIA Phone- 9619688001 FAX : 022-66736000 Pincode : 400 705 Email : Kalpesh.chandan@emerson.com	C&I				81.67	3				, , ,
263	145-14000-A	TRANSMITTERS		N040	NIVO CONTROLS PVT. LTD.		REGULAR	Mr. Praveen Toshniwal 104-115, Electronic Complex, Indore Phone- 0731-4081305 Pincode : 452010 Email : sales@nivocontrols.com	Works-1->Mr. S L Sadani Others 104 115,Electronic Complex -Indore-MADHYA PRADESH INDIA Phone- 0731 4081307 FAX : Pincode : 452010 Email : sales@nivocontrols.com;sadanis@nivocontrols.com	C&I	For Capacitance type only		20-Sep-14	67	2		Small	30-Sep-19	Registered in permanent category as per 11th MISCC-Electrical and C&I (FY 2014-15) dt. 20.09.2014. , Technical limit reviewed on 12.10.2015; , ,
264	145-14000-A	TRANSMITTERS	I0000437	S001	SIEMENS LIMITED		REGULAR	Dr. Armin Bruck/Sandeep Mathur 130, Pandurang Budhkar Marg Worli Mumbai Phone- 0124 383 7377 Pincode : 400018 Email : ankit.varshney@siemens.com	Works-1->Ankit Varshney Kalwa Works, Thane-Belapur Road, Thane, -MUMBAI-MAHARASHTRA INDIA Phone- FAX : Pincode : 400708 Email :	C&I						SIEMENS, Singapore			Comm Add: Attn Mr K.K.Bedi/ Mr Sanjay Satpute, Siemens Ltd. EFIE, Plot no 6A, Sec-18, Maruti Industrial Area, Gurgaon - 122015, Ph 0124-3836250 , , ,
265	145-14000-A	TRANSMITTERS		S039	SMART INSTRUMENTS LTD, BRAZIL		REGULAR	Agents: Digital Electronic Ltd. 74/11 'C' Cross Road MIDC Andheri (East) MUMBAI Phone- 28208477 Pincode : 400093 Email : corp@delbby.rpgms.emsvsnl.net.in		C&I	LD-301 & T-301 TRANSMITTER FROM M/S SMART EQUIPMENTS BRAZIL.								Technical limit reviewed on 12.10.2015; , Technical limit reviewed on 30.04.2014 , ,
266	145-14000-A	TRANSMITTERS	I0000462	T031	Honeywell Automation India Limited		REGULAR	Mr. Ritwij Kulkarni 917, INTERNATIONAL TRADE TOWER, NEHRU PLACE, NEW DELHI Phone- 9890200584 Pincode : 110019 Email : rajesh.chaudhary@honeywell.com	Works-1->Mr.Kedar Tillu 53, 54, 56 & 57,Hadapsar Industrial Estate -PUNE-MAHARASHTRA INDIA Phone- 9665034625 FAX : 020 66039905 Pincode : 411013 Email : kedar.tillu@honeywell.com	C&I									, , ,
267	145-15000-A	TEMPERATURE SWITCH		T001	TOSHNIWAL BROTHERS PVT.LTD.		REGULAR	WORKS:TOSHNIWAL IND.PVT.LTD, INDUSTRIAL ESTATE MAKHUPURA, AJMER Phone- 441171 Pincode : 305002 Email : toshniwalprocess@gmail.com,		C&I									, , ,
268	145-15000-A	TEMPERATURE SWITCH	I0000758	D021	DRESSER INDUSTRIES INC.		REGULAR	Mr. Nishit Patel/Mr. Anuj Verma Plot No.2306, Phase II, GIDC Chhatral Kalol Phone- 02764-233682 Pincode : 382729 Email : Nishit.patel@ashcroftindia.com		C&I									, , ,
269	145-15000-A	TEMPERATURE SWITCH	I0001139	D003	INDFOS (INDIA) LIMITED		REGULAR	MR.L.C.VENKATRANGAN/ MR.B.KANNAN New No.17 II Floor, Adwave Towers, Dr.Sevalia Shivaji Salai, T.Nagar Chennai Phone- +91 44 24353407 Pincode : 600017 Email : delhi@indfos.com		C&I									, , ,

270	145-15000-A	TEMPERATURE SWITCH	I0001570	S009	SWITZER PROCESS INSTRUMENTS PVT. LTD.	, 33AAUCS4408B1ZH	REGULAR	Mr. V S Jayaprakash, 128, SIDCO North Phase, Ambattur Estates CHENNAI Phone- 044-26252017/2018 Pincode : 600050 Email : sales@switzerprocess.co.in	Works-1->C S Shankar 127, Sidco North Phase, Ambattur Estates, -CHENNAI-TAMIL NADU INDIA Phone-8754491904 FAX : 044-26248849 Pincode : 600050 Email : cservice@switzerinstrument.com	C&I								Small	20-May-19	Name changed from "M/s Switzer Instrument Ltd." to "M/s Switzer Process Instruments Pvt. Ltd." w.e.f. 27.07.2016; , , ,
271	145-15000-A	TEMPERATURE SWITCH		S010	SOR INC.		REGULAR	LARRY DEGARMO/Avdhesh Chandra, 14685 W. 105TH STREET LENEXA Phone- 09810905139, Pincode : 66215 Email : Ldegarmo@sorinc.com, avdhesh@sherman-india.com,	Works-1->LARRY DEGARMO/ ROY STUMBOUGH 14685 W. 105TH STREET, LENEXA -KANSAS- USA Phone 913-888-0767 FAX : 913-888-0767 Pincode : 66215 Email : rstumbough@sorinc.com	C&I										, , ,
272	145-16000-A	SIGHT FLOW INDICATORS	I0004041	V040	V. AUTOMAT & INTRUMENTS (P) LTD.	, 07AACV0542K1ZF	REGULAR	Mr. R. K. BASSI/Mr. PRAVEEN KUMAR F-61, OKHLA INDL.AREA, PH-1 NEW DELHI Phone-9810005826 Pincode : 110 020 Email : sales@vautomat.com	Works-1->Mr. BHAGWAN SINGH/ Mr. NANDAN SINGH F-34, OKHLA INDL.AREA,PHASE-I -NEW DELHI-DELHI INDIA Phone- 011-47627200 Extn. 3 FAX : 011- 26819440 Pincode : 110 020 Email : production@vautomat.com	C&I			21-Jan-17							, , ,
273	145-16000-A	SIGHT FLOW INDICATORS	I0002058	B077	BLISS ANAND PVT. LTD.	, 06AACB4798B1ZU	REGULAR	Mr. Vikas Anand/ Mr.RGRajan 92B & 93 B , IMT MANESAR Gurgaon Phone- 0124-4366000 TO 9 Pincode : 122001 Email : sales@blissanand.com	Works-1->Mr. Bharat Kumar/ Mr. Sas Kumar Plot No. 240, Sector-3, HSIIDC, Bawal -Rewari-HARYANA INDIA Phone- 0124-4366000 TO 9 FAX : 0124-2290884 Pincode : 123501 Email : bharat@blissanand .com	C&I										Reassessed on 07.04.2016; , , ,
274	145-16000-A	SIGHT FLOW INDICATORS	I0002862	S158	SCIENTIFIC DEVICES (BOMBAY) PVT LTD,		REGULAR	Office no. 53, Shree Manoshi Complex, Plot No. 5 & 6, Sec-3, Ghansoli (East), Navi Mumbai, Phone-9892230623, Pincode : 400 701, Email : sdbpl@vsnl.com		C&I			05-Dec-12					Small	22-Feb-21	, , ,
275	145-16000-A	SIGHT FLOW INDICATORS	I0006353	B068	B.K.EQUIPMENTS PVT.LTD.	, 33CHAPS0167D1ZQ	REGULAR	T. BALAKRISHNAN/S.VENKATESH 217 , ARCOT ROAD PORUR , CHENNAI Phone-9444057761 Pincode : 600116 Email : bkequip@gmail.com	Works-1->V.KARUNANIDHI/P.BABU 217 , ARCOT ROAD,PORUR , -CHENNAI-TAMIL NADU INDIA Phone-9444131187 FAX : 044-24766852 Pincode : 600116 Email : bkequip@gmail.com	C&I			30-Jul-10	99	2					, , ,
276	145-16000-A	SIGHT FLOW INDICATORS	I0001886	I030	INSTRUMENTATION ENGINEERS PVT LTD	, 36AACI4471N1Z9	REGULAR	SH.N.V.RAM GOPAL/MS. N.NIHARIKA PLOTS 1,2,3, PHASE-III, IDA, JEEDIMETLA HYDERABAD Phone-9848407365 Pincode : 500055 Email : iedelhi@ieflowmeters.com	Works-1->MR. A.V.MURTHY/MR. K.T. RAVISANKER PLOTS 1,2,3, PHASE-III,IDA, JEEDIMETLA -HYDERABAD-TELANGANA INDIA Phone-9885107312 FAX : 040-23096401 Pincode : 500055 Email : sales@ieflowmeters.com	C&I				94.5	2			Small	4-Jan-19	, , ,
277	145-16000-A	SIGHT FLOW INDICATORS	I0001569	S008	SIGMA INSTRUMENTS CO.	, 27AANFS3261N1ZL	REGULAR	Gopal Kannan/R Gopinath 201, ANANDRAJ INDUSTRIAL ESTATE, OFF.LBS MARG, SONAPUR LANE, BHANDUP (W) MUMBAI Phone-+919821038162 Pincode : 400078 Email : sales@sigmainstruments.co.in	Works-1->R Gopinath 27 Nahur Udyog Industrial Premises,M.M.Malviya Road, Mulund(-MUMBAI-MAHARASHTRA INDIA Phone-+912225918567 FAX : +912225918566 Pincode : 400080 Email : sales@sigmainstruments.co.in	C&I										Reassessed on 27.04.2016; , , ,
278	145-21000-A	DIFFERENTIAL PRESSURE SWITCH		S010	SOR INC.		REGULAR	LARRY DEGARMO/Avdhesh Chandra, 14685 W. 105TH STREET LENEXA Phone- 09810905139, Pincode : 66215 Email : Ldegarmo@sorinc.com, avdhesh@sherman-india.com,		C&I										, Reassessed on 21.03.2018. , ,
279	145-23000-A	ANUBAR (DELTA TUBE)	I0002958	S044	STAR-MECH CONTROLS (I) PVT.LTD.	, 27AACCS5874R1ZF	REGULAR	SUSHILLOTAM, SUSHILLOTAM, 29/3A/3, SASANE NAGAR, HADAPSAR, PUNE Phone-02026970450 Pincode : 411028 Email : marketing@starmech.net	Works-1->VIVEK GOTE/ MAHENDRA BANSODE Sr no.54, Plot No.II0,Swami VVekanand Industrial Est.HADAPS -PUNE-MAHARASHTRA INDIA Phone-02026970450 FAX : 02026970470 Pincode : 411028 Email : marketing@starmech.net	C&I				96	3			Small	30-Sep-20	, , ,
280	145-23000-A	ANUBAR (DELTA TUBE)	I0004216	D212	DYNAFLUID VALVES AND FLOW CONTROLS (P) LTD.	, 29AAHCM0681M1ZZ	REGULAR	Mr. Yogish M. Kulkarni Plot # 23, Udyambag, Belgaum Phone- 0831-4210386 Pincode : 590008 Email : yogish@dyna-fluid.com	Works-1->Mr. Yogish M. Kulkarni Dir Plot # 23, Udyambag, -Belgaum-KARNATAKA INDIA Phone- 0831-4210386 FAX : 0831-4210386 Pincode : 590008 Email : yogish@dyna-fluid.com	C&I			05-Aug-16							, , ,
281	145-23000-A	ANUBAR (DELTA TUBE)	I0001883	M009	MICRO PRECISION PRODUCTS PVT. LTD.	, 06AACM8433C1ZT	REGULAR	Mr. Anil Bhati, H.B. No.-40, Revenue Estate, Village-Dudhola,Tehsil & Distt. Palwal FARIDABAD Phone-9560742713;095607427 Pincode : 121002 Email : anil.bhati@wika.com	Works-1->Mr. SANJEEV CHAUHAN ,H.B. No.-40 Others Revenue Estate, Village-Dudhola, Tehsil & Distt.-Palwal -Faridabad-Haryana India Phone-9560742713 FAX : Pincode : 121002 Email : anil.bhati@wika.com	C&I			26-Nov-15					Small	21-Sep-14	, New Works "H.B. No.-40, Revenue Estate, Village-Dudhola, Faridabad-121102 , Haryana " approved w.e.f. 07.05.2018 due to shifting. , ,

282	145-23000-A	ANUBAR (DELTA TUBE)	I0001885	M075	MINCO (INDIA) PRIVATE LIMITED		REGULAR	Mr. Rajeev Vasudeva, D/35, TIVIM INDUSTRIAL ESTATE, KARASWADA, MAPUSA, Goa, Phone- 9313637073 Pincode : 403526, Email : gicdelhi@general-gauges.com	Works-1-> D/35,TIVIM INDUSTRIAL ESTATE, KARASWADA,MAPUSA, -Goa-Goa India Phone- 9320197825, FAX : 0832-2257262, Pincode : 403526, Email : santoshkumar@general-gauges.com	C&I				100	1			Small	1-Jun-20	One time code accorded for 2x660 MW Suratgarh STPS, Stage-V. Hold uplifted w.e.f. 27.12.2017. , , Suspension Delisting w.e.f. 11.08.2015 due to non participation in RA for Banharpalli Project for Flow Orifice. Hold uplifted w.e.f. 27.12.2017. ,
283	145-23000-A	ANUBAR (DELTA TUBE)	I0001570	S009	SWITZER PROCESS INSTRUMENTS PVT. LTD.	, 33AAUCS9408B1ZH	REGULAR	Mr. V S Jayaprakash, 128, SIDCO North Phase, Ambattur Estates CHENNAI Phone- 044-26252017/2018 Pincode : 600050 Email : sales@switzerprocess.co.in	Works-1->C S Shankar 127, Sidco North Phase, Ambattur Estates, -CHENNAI-TAMIL NADU INDIA Phone-8754491904 FAX : 044-26248849 Pincode : 600050 Email : cservice@switzerinstrument.com	C&I			30-Jul-10					Small	20-May-19	Name changed from "M/s Switzer Instrument Ltd." to "M/s Switzer Process Instruments Pvt. Ltd." w.e.f. 27.07.2016; , , ,
288	145-25000-A	JUNCTION BOX	I0001516	K043	K.S.INSTRUMENTS PVT.LTD.		REGULAR	S Raghavan No. 72, 3rd Main, 1st Stage Industrial Suburb, Yeshwanthpur Bangalore Phone- 9880385770 Pincode : 560022 Email : sales1@ksinstruments.net		C&I			30-Jul-10	88	3					, , ,
289	145-25000-A	JUNCTION BOX	I0002055	S095	SUCHITRA INDUSTRIES		REGULAR	NO-2,OPP-27 AECS LAYOUT 2ND STG REJAMAHALVILAS EXTN 2ND STG BANGALORE Phone- Pincode : Email : suchitra.industriesblr@gmail.com	Works-1->B. Srinivas Suchitra Industries, Opp No 53, Muneshwara Block Devinagar, Lottagal hal -BANGALORE-KARNATAKA INDIA Phone 080-23511247 FAX : Pincode : 560094 Email : suchitra_industries@yahoo.com	C&I				88.67	3					, , ,
290	145-25000-A	JUNCTION BOX		F201	FLEXPRO ELECTRICALS PVT. LTD.		REGULAR	Mr. Dineshbhai Zaveri C-1(27&37, GIDC, Kabilpore, Navsari Phone- 02637-265140,265003 Pincode : 396424 Email : flexpro@flexproltd.com	Works-1->Mr. Dineshbhai Zaveri CEO C-1/ 27&37, GIDC, Kabilpore, -Navsari-GUJARAT INDIA Phone- 02637-265140,265003 FAX : 02637-265308 Pincode : 396424 Email : flexpro@flexproltd.com	C&I		Metal type junction box only	02-Feb-15						Technical limit reviewed on 12.10.2015; , , ,
291	145-25000-A	JUNCTION BOX	I0002056	S114	Shrenik & Company,		REGULAR	Mr. Mitesh Shah/Mr. Pulin Shah 39 A/3 ,Panchratna Industrial Estate, Sarkhej-Bavla Road Ahmedabad Phone- 9825024921 Pincode : 382213 Email : sales@pustron.com, pulin@sumip.com	Works-1->Mr.Pulin Shah/ Mr. Kaloesh Parmar 39 A/3 ,Panchratna Industrial Est,Sarkhej-Bavla Road, Changodhar -Ahmedabad-GUJARAT INDIA Phone-98250 80339 1 FAX : 079-26932424 Pincode : 382213 Email : sales@sumip.com	C&I			24-Mar-10						Registered for FRP JBs AND METAL JBs. , Technical limit reviewed on 30.04.2014; , ,
292	145-25000-A	JUNCTION BOX	I0002057	A101	AJMERA INDUSTRIAL & ENGINEERING WORKS		REGULAR	JIGNESH MAHENDRA AJMERA DENA BANK BLDG.,SHREE NAGESH INDL. ESTATE,STATION ROAD, MUMBAI Phone- 022 67973578 Pincode : 400 088 Email : ajmera@ajmera.net,	Works-1->JIGNESH MAHENDRA AJMERA DENA BANK BLDG., SHREE NAGESHINDL. ESTATE,STATION ROAD, -MUMBAI-MAHARASHTRA INDIA Phone- 022 67973578 FAX : Pincode : 400 088 Email : ajmera@ajmera.net	C&I			26-Nov-10	69	1					Reviewed in MISCC dt. 21.07.2015 for non-response in 4 consecutive tender enquiry; , APPROVED FOR GALVANIZED AND FRP JUNCTION BOXES; Technical limit reviewed on 30.04.2014 , ,
293	145-31000-A	Cold Junction Compensation Box (CJCB)		C048	CREATIVE INSTRUMENTS & CONTROLS		REGULAR	NO-17/1 , 1ST FLOOR , 11TH CROSS 1ST K BLOCK , RAJAJINAGAR, BANGALORE-560010 Phone- Pincode : Email : crinstruments@gmail.com		C&I				81	1					, , ,
294	145-32000-A	INSTRUMENTS TUBE FITTINGS	I0002047	V039	VIKAS INDUSTRIAL PRODUCTS		REGULAR	S.R.SINGH/NAVEEN SINGH B - 2, SECTOR - 6, NOIDA Phone- +91-9810122070 Pincode : 201301 Email : naveensingh@vsnl.com	Works-1->S.R.SINGH/ NAVEEN SINGH B - 2, SECTOR - 6, -NOIDA-UTTAR PRADESH INDIA Phone- 0120-4352940 FAX : 0120-4352940 Pincode : 201301 Email : naveensingh@vsnl.com	C&I		Over all financial limit for ordering as Rs.30 lacs (Rs.Thirty Lacs). The registration category & the financial limit may be reviewed after survey in March 2009 and approval thereof. Registered w.e.f. 22.01.2009.	30-Jul-10							, , ,
295	145-32000-A	INSTRUMENTS TUBE FITTINGS	I0001335	P046	PRECISION ENGINEERING INDUSTRIES		REGULAR	K. SITARAM/ K. SRINIVAS 7,SIDHAPURA INDUSTRIAL ESTATE S.V. ROAD,GOREGAON(W) MUMBAI Phone- 022 42631700 Pincode : 400 062 Email : peiks@vsnl.com	Works-1->ALEX BAPTIST/ K. SRINIVAS 7. SIDHAPURA INDUSTRIAL ESTATE,SV ROAD, GOREGAON(WEST) -MUMBAI-MAHARASHTRA INDIA Phone 022-42631700 FAX : 022-40035259 Pincode : 400 062 Email : srinivas@precision-engg.com	C&I				63	2					, , ,
296	145-32000-A	INSTRUMENTS TUBE FITTINGS	I0002051	A079	AURA INCORPORATED		REGULAR	NIRAJ SHARAN/SUJIT KUMAR W-167A, GREATER KAILASH-II NEW DELHI Phone- 9810182430 Pincode : 110048 Email :		C&I			27-Jan-09	65.33	3					, , ,

297	145-32000-A	INSTRUMENTS TUBE FITTINGS	I0001307	H024	Fluid Controls Pvt. Ltd.		REGULAR	Sophie Y. Moochhala/Mayur Rajput J.V.PATEL, I.T.I CMPD, B.MADHUKAR MARG, ELPHINSTONE ROADSTN.(WR), MUMBAI Phone- (022) 43338000 Pincode : 400013 Email : sales@fluidcontrols.com	Works-1->Mr. Tansen Choudhari/Mr. Mahesh Darekar Shed No.8, Lonavla Indl.Co-op.Estate Ltd,Nagargaon, -Lonavla-MAHARASHTRA INDIA Phone-9823951347 FAX : (02114) 271132 Pincode : 410 401 Email : factory@hyd-air.com	C&I			17-Sep-09	79	2				, , ,
298	145-33000-A	VENTURI METER		T108	TM TECNOMATIC SPA		REGULAR	MR. ANTONIO NOVIELLO/Mrs. Enrica Bazzocc VIA DELLE INDUSTRIE, 36 CREMONA Phone-39037221574 Pincode : 26100 Email : info@tmtecnomatic.com	Works-1->Mrs. Enrica Bazzocchi VIA DELLE INDUSTRIE, 36, -CREMONA-Italy Phone- 39037221574 FAX : 39037228318 Pincode : 26100 Email : sales@tmtecnomatic.com	C&I			19-Oct-12						AS PER DECISION OF MISCC-ELECT AND C&I HELD ON 19.10.2012 , , ,
299	145-33000-A	VENTURI METER	I0001883	M009	MICRO PRECISION PRODUCTS PVT. LTD.	, 06AACM8433C1ZT	REGULAR	Mr. Anil Bhati, H.B. No.-40, Revenue Estate, Village-Dudhola,Tehsil & Distt. Palwal FARIDABAD Phone 9560742713;095607427 Pincode : 121002 Email : anil.bhati@wika.com		C&I			22-Oct-11				Small	21-Sep-14	, , ,
300	145-33000-A	VENTURI METER	I0002958	S044	STAR-MECH CONTROLS (I) PVT LTD.	, 27AACCS5874R1ZF	REGULAR	SUSHILLOTAM, SUSHILLOTAM, 29/3A/3, SASANE NAGAR, HADAPSAR, PUNE Phone-02026970450 Pincode : 411028 Email : marketing@starmech.net	Works-1->VIVEK GOTE/ MAHüNDRA BANSODE Sr no.54, Plot No.II0,Swami VIVekanand Industrial Est.HADAPS -PUNE-MAHARASHTRA INDIA Phone-02026970450 FAX : 02026970470 Pincode : 411028 Email : marketing@starmech.net	C&I			22-Oct-11	67	1		Small	30-Sep-20	, , ,
301	145-34000-A	ROTAMETER	I0001886	I030	INSTRUMENTATION ENGINEERS PVT LTD	, 36AACI4471N1Z9	REGULAR	SH.N.V.RAM GOPAL/MS. N.NIHARIKA PLOTS 1,2,3, PHASE-III, IDA, JEEDIMETLA HYDERABAD Phone-9848407365 Pincode : 500055 Email : iedelhi@ieflowmeters.com	Works-1->MR. A.V.MURTHY/MR. K.T. RAVISANKER PLOTS 1,2,3, PHASE-III,IDA, JEEDIMETLA -HYDERABAD-TELANGANA INDIA Phone-9885107312 FAX : 040-23096401 Pincode : 500055 Email : sales@ieflowmeters.com	C&I				71.67	3		Small	4-Jan-19	, , ,
302	145-34000-A	ROTAMETER	I0007911	T211	TANSA EQUIPMENTS PVT. LTD.	, 27AAACT6222A1ZV	REGULAR	Mr. Vardhan Tamhankar, Unit No35/36/41,Om Anand Industrial Est. Mohanjee Sundarjee Road,Raghunath Nagar, Thane Phone- 022-25832323 Pincode : 400604 Email : tansaindia@gmail.com	Works-1-> Others Mohanjee Sundarjee Road, Raghunath Nagar, Thane -Mumbai-MAHARASHTRA INDIA Phone- FAX : Pincode : 400604 Email :	C&I			29-Nov-16						, , ,
303	145-34000-A	ROTAMETER	I0001598	E047	EUREKA INDUSTRIAL EQUIPMENTS PVT.LTD.	, 27AAACE6188J1ZA	REGULAR	Mr V. K. Pandit/Mr Ashish Shaha 17-20, Royal chambers, Paud Road Pune Phone-9370469466 Pincode : 411038 Email :	Works-1->Mr S. M. Alawani/Mr V. V. Deshpande J-501, M.I.D.C. Pimpri, -PUNE-MAHARASHTRA INDIA Phone-9325751732 FAX : 020-30681731 Pincode : 411018 Email : works@eurekaflow.com	C&I			30-Jul-10						, , ,
304	145-34000-A	ROTAMETER	I0002862	S158	SCIENTIFIC DEVICES (BOMBAY) PVT LTD,		REGULAR	Office no. 53, Shree Manoshi Complex, Plot No. 5 & 6, Sec-3, Ghansoli (East), Navi Mumbai, Phone-9892230623, Pincode : 400 701, Email :	Works-1->Scientific Centre, S.No. 65, Hissa No. 7,By-Pass Juction, Kausa, -Mumbai-MAHARASHTRA INDIA Phone-9892230623, FAX : 022-25491408/9 Pincode : 400 612, Email : sales@scientificdevices.com	C&I			05-Dec-12				Small	22-Feb-21	, , ,
305	145-35000-A	LEVEL SWITCH-CAPACITANCE TYPE	I0001569	S008	SIGMA INSTRUMENTS CO.	, 27AANFS3261N1ZL	REGULAR	Gopal Kannan/R Gopinath 201, ANANDRAJ INDUSTRIAL ESTATE, OFF.LBS MARG, SONAPUR LANE, BHANDUP (W) MUMBAI Phone-+919821038162 Pincode : 400078 Email : sales@sigmainstruments.co.in	Works-1->R Gopinath 27 Nahur Udyog Industrial Premises,M.M.Malviya Road, Mulund(-MUMBAI-MAHARASHTRA INDIA Phone-+912225918567 FAX : +912225918566 Pincode : 400080 Email : sales@sigmainstruments.co.in	C&I									, , ,
306	145-35000-A	LEVEL SWITCH-CAPACITANCE TYPE	I0004041	V040	V. AUTOMAT & INTRUMENTS (P) LTD.	, 07AACCV0542K1ZF	REGULAR	Mr. R. K. BASSI/Mr. PRAVEEN KUMAR F-61, OKHLA INDL.AREA, PH-I NEW DELHI Phone-9810005826 Pincode : 110 020 Email :	Works-1->Mr. BHAGWAN SINGH/ Mr. NANDAN SINGH F-61, OKHLA INDL.AREA,PHASE-I -NEW DELHI-DELHI INDIA Phone- 011-47627200 Extn. 3 FAX : 011- 26819440 Pincode : 110 020 Email :	C&I			28-Jan-09						, , ,
307	145-35000-A	LEVEL SWITCH-CAPACITANCE TYPE	I0002862	S158	SCIENTIFIC DEVICES (BOMBAY) PVT LTD,		REGULAR	Office no. 53, Shree Manoshi Complex, Plot No. 5 & 6, Sec-3, Ghansoli (East), Navi Mumbai, Phone-9892230623, Pincode : 400 701, Email :	Works-1->Scientific Center, Others By-Pass Junction,Near Kalsekar College kausa, mumbra,Thane -Mumbai-MAHARASHTRA INDIA Phone- 022-25491409,9892230623 FAX : Pincode : 400612 Email : sdbpl@vsnl.com	C&I			31-May-17				Small	22-Feb-21	, , ,
308	145-35000-A	LEVEL SWITCH-CAPACITANCE TYPE	I0001494	P068	Pune Techtrol Pvt. Ltd.	, 27AABCP1274H1ZI	REGULAR	N.P.Khatan/Sudhakar Badiger S-18, MIDC Bhosari, Pune Phone-9850560042 Pincode : 411 026 Email :		C&I			23-Mar-12						, , ,

309	145-35000-A	LEVEL SWITCH-CAPACITANCE TYPE	I0000350	L005	LEVCON INSTRUMENTS PVT. LTD.	, 19AACL4808N1Z5	REGULAR	Mr Shayak Gupta/Badal Jana Rajkamal', 7th floor, 13, Camac Street KOLKATA Phone- 0 33 2283 2766 Pincode : 700017 Email : b_jana@levcongroup.com,		C&I										, , ,
310	145-35000-A	LEVEL SWITCH-CAPACITANCE TYPE	I0000007	W017	Baumer Technologies India Pvt. Ltd.		REGULAR	Mr. Shyam Warilani/Mr. V Suresh Babu 36, DAMJI SHAMJI INDUSTRIAL COMPLEX, OFF.-MAHAKALI CAVES ROAD, ANDHERI(E) MUMBAI Phone- +91 99589 25151 Pincode : 400093 Email : sales.in@baumer.com	Works-1->Mr. Shyam Warilani/Mr. V Suresh Babu Plot No 34 Â GIDC Â Phase 1, -VAPI-GUJARAT INDIA Phone- +91 11 4161 7111 FAX : 022 2687 3613 Pincode : 396 195 Email : pbajaj@baumer.com	C&I										, NAME HAS BEEN CHANGED FROM M/S WAAREE INSTRUMENTS LTD. TO M/S BAUMER TECHNOLOGIES INDIA PVT. LTD. W.E.F. 13.06.2012 , ,
311	145-36000-A	LEVEL SWITCH-CONDUTIVITY TYPE	I0000532	S123	Sapcon Instrument Pvt Ltd.		REGULAR	131, PALSHIKAR COLONY Contact Person- Mr. Ashwin (9826080207) INDORE Phone- +91-731-4085751, Pincode : 452004 Email : sales@sapconinstruments.com	Works-1->Mr. Ashwin R Palshikar/Mr. Navin Bodse 131 PALSHIKAR COLONY, -INDORE-MADHYA PRADESH INDIA Phone- 9754261005 FAX : 0731-2475475 Pincode : 452004 Email : sales@sapcon.in	C&I			22-Oct-11						, , ,
312	145-36000-A	LEVEL SWITCH-CONDUTIVITY TYPE	I0000350	L005	LEVCON INSTRUMENTS PVT. LTD.	, 19AACL4808N1Z5	REGULAR	Mr Shayak Gupta/Badal Jana Rajkamal', 7th floor, 13, Camac Street KOLKATA Phone- 0 33 2283 2766 Pincode : 700017 Email : b_jana@levcongroup.com,	Works-1-> 38G, PICNIC GARDEN ROAD, -KOLKATA-WEST BENGAL INDIA Phone- FAX : Pincode : Email :	C&I			01-Jun-09						, , ,
313	145-36000-A	LEVEL SWITCH-CONDUTIVITY TYPE	I0002058	B077	BLISS ANAND PVT. LTD.	, 06AACB4798B1ZU	REGULAR	Mr. Vikas Anand/ Mr.RGRajan 92B & 93 B , IMT MANESAR Gurgaon Phone- 0124-4366000 TO 9 Pincode : 122001 Email :	Works-1->Mr. Bharat Kumar/ Mr. Sas Kumar Plot No. 92B & 93B,Sec-V, IMTManesar -GURGAON-HARYANA INDIA Phone- 0124-4366000 TO 9 FAX : 0124-2290884 Pincode : 122002 Email : bharat@blissanand.com ,	C&I									, , ,
314	145-36000-A	LEVEL SWITCH-CONDUTIVITY TYPE	I0003759	H047	HI-TECH SYSTEMS & SERVICES LTD.		REGULAR	Mr. Vikash Agrawal/Mr. Tarun Debnath 119, PARK STREET , KOLKATA Phone- 033-22290045 Pincode : 700016 Email : sandeep@hitech.in	Works-1->Mr. Jitendra Kumar/Mr. Debasis Dey 82/1, Sarsuna Main Road, -KOLKATA-WEST BENGAL INDIA Phone 9883994030 FAX : Pincode : 700061 Email : jitendra@hitech.in	C&I	Vendor shall source import contents of Level Switch (Conductivity Type) from Levelstate Systems Ltd., United Kingdom.		01-Jun-09						Technical limit reviewed on 12.10.2015; , Technical limit reviewed on 30.04.2014; , ,
315	145-36000-A	LEVEL SWITCH-CONDUTIVITY TYPE	I0002060	R047	RAMAN INSTRUMENTS PVT.LTD.		REGULAR	Mr. N R Shenoy/Mr G B Vjh 8, First Floor.Plot : 160A Bait-Ush-Sharaf, 29th Road,Bandra(W) MUMBAI Phone- 09892331381 Pincode : 400050 Email : ramanbpl@vsnl.com	Works-1->NA -- Phone- FAX : Pincode : Email :	C&I	Vendor shall source import contents of Level Switch (Conductivity Type) from Mobrey Measurement, an operating unit of Morbey Ltd., Slough, Berkshire, United Kingdom.		01-Jun-09						Technical limit reviewed on 12.10.2015; , Technical limit reviewed on 30.04.2014; , ,
316	145-36000-A	LEVEL SWITCH-CONDUTIVITY TYPE	I0004041	V040	V. AUTOMAT & INTRUMENTS (P) LTD.	, 07AACV0542K1ZF	REGULAR	Mr. R. K. BASSI/Mr. PRAVEEN KUMAR F-61, OKHLA INDL.AREA, PH-1 NEW DELHI Phone- 9810005826 Pincode : 110 020 Email :	Works-1->Mr. BHAGWAN SINGH/ Mr. NANDAN SINGH F-61, OKHLA INDL.AREA,PHASE-I -NEW DELHI-DELHI INDIA Phone- 011-47627200 Extn. 3 FAX : 011- 26819440 Pincode : 110 020 Email :	C&I									, , ,
317	145-36000-A	LEVEL SWITCH-CONDUTIVITY TYPE	I0001569	S008	SIGMA INSTRUMENTS CO.	, 27AANFS3261N1ZL	REGULAR	Gopal Kannan/R Gopinath 201, ANANDRAJ INDUSTRIAL ESTATE, OFF.LBS MARG, SONAPUR LANE, BHANDUP (W) MUMBAI Phone- +919821038162 Pincode : 400078 Email : sales@sigmainstruments.co.in	Works-1->R Gopinath 27 Nahur Udyog Industrial Premises,M.M.Malviya Road, Mulund(-MUMBAI-MAHARASHTRA INDIA Phone- +912225918567 FAX : +912225918566 Pincode : 400080 Email : sales@sigmainstruments.co.in	C&I									, , ,
318	145-36000-A	LEVEL SWITCH-CONDUTIVITY TYPE		S010	SOR INC.		REGULAR	LARRY DEGARMO/Avdhesh Chandra, 14685 W. 105TH STREET LENEXA Phone- 09810905139, Pincode : 66215 Email : Ldegarmo@sorinc.com, avdhesh@sherman-india.com,	Works-1->LARRY DEGARMO/ ROY STUMBOUGH 14685 W. 105TH STREET, LENEXA -KANSAS- USA Phone 913-888-0767 FAX : 913-888-0767 Pincode : 66215 Email : rstumbough@sorinc.com	C&I									, , ,
319	145-37000-A	LEVEL SWITCH-FLOAT TYPE	I0001494	P068	Pune Techtrol Pvt. Ltd.	, 27AABCP1274H1ZI	REGULAR	N.P.Khatav/Sudhakar Badiger S-18, MIDC Bhosari, Pune Phone- 9850560042 Pincode : 411 026 Email :		C&I			23-Mar-12						, , ,

320	145-37000-A	LEVEL SWITCH-FLOAT TYPE	I0004041	V040	V. AUTOMAT & INTRUMENTS (P) LTD.	07AAACV0542K1ZF	REGULAR	Mr. R. K. BASSI/Mr. PRAVEEN KUMAR F-61, OKHLA INDL.AREA, PH-I NEW DELHI Phone- 9810005826 Pincode : 110 020 Email : sales@vautomat.com	Works-1->Mr. BHAGWAN SINGH/ Mr. NANDAN SINGH F-61, OKHLA INDL.AREA,PHASE-I -NEW DELHI-DELHI INDIA Phone- 011-47627200 Extn. 3 FAX : 011- 26819440 Pincode : 110 020 Email : production@vautomat.com	C&I										, , ,
321	145-37000-A	LEVEL SWITCH-FLOAT TYPE	I0001422	D046	D.K. INSTRUMENTS PVT.LTD.		REGULAR	N.SIKDAR/ SUMIT SIKDAR 76/2,SELIMPUR RD DHAKURIA Kolkata Phone- 033-2415-1310. Pincode : 700031 Email : dkinst@vsnl.net		C&I			30-Jul-10							, , ,
322	145-37000-A	LEVEL SWITCH-FLOAT TYPE	I0002862	S158	SCIENTIFIC DEVICES (BOMBAY) PVT LTD,		REGULAR	Office no. 53, Shree Manoshi Complex, Plot No. 5 & 6, Sec-3, Ghansoli (East), Navi Mumbai, Phone- 9892230623, Pincode : 400 701, Email : sdbpl@vsnl.com	Works-1->Scientific Center, Others By-Pass Junction,Near Kalsekar College kausa, mumbra,Thane -Mumbai-MAHARASHTRA INDIA Phone- 022-25491409,9892230623 FAX : Pincode : 400612 Email : sdbpl@vsnl.com	C&I			31-May-17				Small	22-Feb-21	, , ,
323	145-37000-A	LEVEL SWITCH-FLOAT TYPE	I0000350	L005	LEVCON INSTRUMENTS PVT. LTD.	19AAACL4808N1Z5	REGULAR	Mr Shayak Gupta/Badal Jana Rajkamal', 7th floor, 13, Camac Street KOLKATA Phone- 0 33 2283 2766 Pincode : 700017 Email : b_jana@levcongroup.com		C&I			01-Jun-09							, , ,
324	145-37000-A	LEVEL SWITCH-FLOAT TYPE		G060	GENERAL INSTRUMENTS CONSORTIUM		REGULAR	Mr. Amarendra Kulkarni 194/195, Gopi Tank Road, Off. Pandurang Naik Marg, Mahim Mumbai Phone- 9323195251 Pincode : 400016 Email : amarendra@general-gauges.com		C&I			30-Sep-10							Workas at- GAUGES BOURDON INDIA PVT. LTD. (A MFG. UNIT OF GENERAL INSTRUMENTS CONSORTIUM , PLOT NO-4, 5 & 6, JAWAHAR Co-op. INDUSTRIAL ESTATE, KAMOTHE, PANVEL- 410 209 , , ,
325	145-37000-A	LEVEL SWITCH-FLOAT TYPE	I0000007	W017	Baumer Technologies India Pvt. Ltd.		REGULAR	Mr. Shyam Warilani/Mr. V Suresh Babu 36, DAMJI SHAMJI INDUSTRIAL COMPLEX, OFF.-MAHAKALI CAVES ROAD, ANDHERI(E) MUMBAI Phone- +91 99589 25151 Pincode : 400093 Email : sales.in@baumer.com	Works-1->Mr. Shyam Warilani/Mr. V Suresh Babu Plot No 34 Â GIDC Â Phase 1, -VAPI-GUJARAT INDIA Phone-+91 11 4161 7111 FAX : 022 2687 3613 Pincode : 396 195 Email : pbajaj@baumer.com	C&I									, NAME HAS BEEN CHANGED FROM M/S WAAREE INSTRUMENTS LTD. TO M/S BAUMER TECHNOLOGIES INDIA PVT. LTD. W.E.F. 13.06.2012 , ,
326	145-37000-A	LEVEL SWITCH-FLOAT TYPE	I0002062	S106	SBEM PVT. LTD.		REGULAR	MR.N.K. BEDARKAR/MR. VISHWANATH KARANDIK 39, ELECTRONIC CO.OP. ESTATE, PUNE SATARA ROAD PUNE, Phone- 912041030100 Pincode : 411009 Email : newdelhi@sbem.co.in	Works-1->MR. MOHAN PADWAL 691/A/2,BIBWEWADI INDL ESTATE -PUNE-MAHARASHTRA INDIA Phone-918600042374 FAX : 912024215670 Pincode : 411037 Email : wm@sbem.co.in	C&I			30-Jul-10							, , ,
327	145-37000-A	LEVEL SWITCH-FLOAT TYPE	I0001569	S008	SIGMA INSTRUMENTS CO.	, 27AANFS3261N1ZL	REGULAR	Gopal Kannan/R Gopinath 201, ANANDRAJ INDUSTRIAL ESTATE, OFF.LBS MARG, SONAPUR LANE, BHANDUP (W) MUMBAI Phone- +919821038162 Pincode : 400078 Email : sales@sigmainstruments.co.in	Works-1->R Gopinath 27 Nahur Udyog Industrial Premises,M.M.Malviya Road, Mulund(-MUMBAI-MAHARASHTRA INDIA Phone-+912225918567 FAX : +912225918566 Pincode : 400080 Email : sales@sigmainstruments.co.in	C&I			01-Jun-09	70	1				Vendor shall source import contents of Level Switch (Conductivity Type) from Mobrey Measurement, an operating unit of Morbey Ltd., Slough, Berkshire, United Kingdom. , , ,
328	145-37000-A	LEVEL SWITCH-FLOAT TYPE		S010	SOR INC.		REGULAR	LARRY DEGARMO/Avdhesh Chandra, 14685 W. 105TH STREET LENEXA Phone- 0981090139, Pincode : 66215 Email : Ldegarmo@sorinc.com, avdhesh@sherman-india.com,	Works-1->LARRY DEGARMO/ ROY STUMBOUGH 14685 W. 105TH STREET, LENEXA -KANSAS- USA Phone 913-888-0767 FAX : 913-888-0767 Pincode : 66215 Email : rstumbough@sorinc.com	C&I									, Reassessed on 21.03.2018. , ,
329	145-38000-A	INSTRUMENTS PIPE FITTINGS	I0002051	A079	AURA INCORPORATED		REGULAR	NIRAJ SHARAN/SUJIT KUMAR W-167A, GREATER KAILASH-II NEW DELHI Phone- 9810182430 Pincode : 110048 Email : niraj@aurainc.com		C&I			27-Jan-09							, , ,
330	145-38000-A	INSTRUMENTS PIPE FITTINGS	I0001335	P046	PRECISION ENGINEERING INDUSTRIES		REGULAR	K. SITARAM/ K. SRINIVAS 7,SIDHAPURA INDUSTRIAL ESTATE S.V. ROAD,GOREGAON(W) MUMBAI Phone- 022 42631700 Pincode : 400 062 Email : peiks@vsnl.com	Works-1->ALEX BAPTIST/ K. SRINIVAS 7, SIDHAPURA INDUSTRIAL ESTATE,SV ROAD, GOREGAON(WEST) -MUMBAI-MAHARASHTRA INDIA Phone 022-42631700 FAX : 022-40035259 Pincode : 400 062 Email : srinivas@precision-engg.com	C&I									, , ,
331	145-38000-A	INSTRUMENTS PIPE FITTINGS	I0002047	V039	VIKAS INDUSTRIAL PRODUCTS		REGULAR	S.R.SINGH/NAVEEN SINGH B - 2, SECTOR - 6, NOIDA Phone- +91-9810122070 Pincode : 201301 Email : naveensingh@vsnl.com	Works-1->S.R.SINGH/ NAVEEN SINGH B - 2, SECTOR - 6, -NOIDA-UTTAR PRADESH INDIA Phone- 0120-4352940 FAX : 0120-4352940 Pincode : 201301 Email : naveensingh@vsnl.com	C&I		Over all financial limit for ordering as Rs.30 lacs (Rs.Thirty Lacs).	22-Dec-11	94	1				, , ,

332	145-38000-A	INSTRUMENTS PIPE FITTINGS	I0001307	H024	Fluid Controls Pvt. Ltd.		REGULAR	Sophie Y. Moochhala/Mayur Rajput J.V.PATEL, I.T.I CMPD, B.MADHUKAR MARG, ELPHINSTONE ROADSTN.(WR), MUMBA Phone- (022) 43338000 Pincode : 400013 Email : sales@fluidcontrols.com	Works-1->Mr. Tansen Choudhari/Mr. Mahesh Darekar Shed No.8, Lonavla Indl.Co-op.Estate Ltd,Nagargaon, -Lonavla-MAHARASHTRA INDIA Phone-9823951347 FAX : (02114) 271132 Pincode : 410 401 Email : factory@hyd-air.com	C&I			30-Mar-10	93	3				, , ,
333	145-40000-A	VIBRATION MONITORING SYSTEM		M097	MEGGITT INDIA PVT. LTD.		REGULAR	LJ Swaminathan/Gaurav Anand Unit-04A, Level-02, Bagmane Laurel Bagmane Tech Park, CV Raman Nagar Bangalore Phone-+91-9731577119 Pincode : 560093 Email : gaurav.anand@meggitt.com		C&I			24-Aug-12						PARENT COMPANY: MEGGITT SA, SWITZERLAND. ENTIRE RESPONSIBILITY OF ALL CONTRACTUAL OBLIGATIONS SHALL BE OF INDIAN VENDOR AS DECIDED BY 4TH MISCC (ELECT AND C&I) HELD ON 24.08.2012. , , ,
334	145-40000-A	VIBRATION MONITORING SYSTEM	I0003898	S156	SKF INDIA LIMITED		REGULAR	Mr. Shishir Joshipura SERVICE BUSINESS UNIT, CHINCHWAD, PUNE Phone- +91 982 3161755 Pincode : 411033 Email : sandeep.gadre@skf.com		C&I			24-Aug-12						PARENT COMPANY: SKF CONDITION MONITORING INC, USA. ENTIRE RESPONSIBILITY OF ALL CONTRACTUAL OBLIGATIONS SHALL BE OF INDIAN VENDOR AS DECIDED BY 4TH MISCC (ELECT AND C&I) HELD ON 24.08.2012. , , ,
335	145-40000-A	VIBRATION MONITORING SYSTEM		R056	ROCKWELL AUTOMATION INDIA PVT LTD		REGULAR	A-66, SEC- 64, NOIDA, Phone- 0120-4671236 Pincode : 201301 Email : raindia@ra.rockwell.com; asharma@ra.rockwell.com		C&I			24-Aug-12						PARENT COMPANY: ROCKWELL AUTOMATION INC,USA. ENTIRE RESPONSIBILITY OF ALL CONTRACTUAL OBLIGATIONS SHALL BE OF INDIAN VENDOR AS DECIDED BY 4TH MISCC (ELECT AND C&I) HELD ON 24.08.2012. ,
336	145-40000-A	VIBRATION MONITORING SYSTEM	I0000274	F034	FORBES MARSHALL PVT. LTD	, 27AACF2630E1Z5	REGULAR	Mr. Kekoo Vacha P No. B 85, Phase II, Chakan Industrial Area, Vill.-Savardari Chakan, Tal:Khed PUNE Phone-9823092007 Pincode : 410501 Email : kvacha@forbesmarshall.com		C&I			24-Aug-12						IN ASSOCIATION WITH SHINKAWA ELECTRIC CO. LTD.,JAPAN (V.CODE 5155) AS PER AGREED SCOPE MATRIX.ENTIRE RESPONSIBILITY OF ALL CONTRACTUAL OBLIGATIONS SHALL BE OF INDIAN VENDOR , , ,
337	145-40000-A	VIBRATION MONITORING SYSTEM	I0000296	G068	GE INDIA INDUSTRIAL PVT. LTD.		REGULAR	Mr. Pramod Kaushik/Vijay Pal BUILDING NO-7A, 4TH FLOOR GURGAON Phone- 0124-4808515 Pincode : 122002 Email : vijay.pal@ge.com		C&I			24-Aug-12						PARENT COMPANY: BENTLY NEVADA INC, USA. ENTIRE RESPONSIBILITY OF ALL CONTRACTUAL OBLIGATIONS SHALL BE OF INDIAN VENDOR AS DECIDED BY 4TH MISCC (ELECT AND C&I) HELD ON 24.08.2012. ,
338	145-42000-A	ULTRASONIC FLOW METERS	I0007550	E211	Electronet Equipments Pvt Ltd.	, 27AABCE2486N1Z8	REGULAR	Mr. Rajendra Nagaonkar/MD, Plot No. 84, 85 & 86, Tiny Industrial Estate Kondhwa Budruk, Pune Phone-9822015256 Pincode : 411048 Email : ho@eeplindia.com	Works-1-> Others Plot No. 84, 85 & 86, Tiny Industrial Estate, Kondhwa Budruk -Pune-MAHARASHTRA INDIA Phone- 20-26932039 FAX : 20-26934122 Pincode : 411048 Email : ho@eeplindia.com	C&I			07-Nov-17				Small	26-Jul-21	, , ,
339	145-42000-A	ULTRASONIC FLOW METERS	I0001391	A216	Adept Fluidyne Pvt. Ltd.	, 27AABCA5165G1ZT	REGULAR	Vinayak Gadre Plot No 4,S.No.17/1-B Kothrud Industrial Estate Pune Phone- 020 25464551 Pincode : 411038 Email : info@adeptfluidyne.com	Works-1-> Plot No 4,S.No.17/1-B Kothrud Industrial Estate -Pune-MAHARASHTRA india Phone- 020 25464551 FAX : Pincode : 411038 Email : info@adeptfluidyne.com	C&I			07-Nov-17	100	3		Small	29-Feb-20	, , ,
340	145-42000-A	ULTRASONIC FLOW METERS		F211	FLEXIM Flexible Industriemesstechnik GmbH		REGULAR	Boxberger Str., 4, Berlin Berlin Phone- 0049 30 93 66 76 60 Pincode : 12681 Email : info@flexim.de	Works-1-> Others Boxberger Str. 4, -Berlin- GERMANY Phone- 0049 30 93 66 76 60 FAX : Pincode : 12681 Email : info@flexim.de	C&I			14-Nov-17						, , ,
341	145-42000-A	ULTRASONIC FLOW METERS	I0001831	R057	Rockwin Flowmeter India Pvt. Ltd.	, 09AACR1422N1ZC	REGULAR	B-24, Site-IV, Sahibabad Industrial Area Ghaziabad, Phone-9810129687 Pincode : 201010, Email : amiya@rockwin.com	Works-1->MR Rajiv PRAKASH B-24, Site-IV, Sahibabad Industrial Area, -Ghaziabad-UTTAR PRADESH India Phone- 9810129687 FAX : 01202895450 Pincode : 201010, Email : rajiv@rockwin.com	C&I			14-Mar-17				Small	16-Sep-20	, , ,
342	145-42000-A	ULTRASONIC FLOW METERS	I0002210	F206	FLASH FORGE PVT LTD		REGULAR	Mr. Gautam Makker, 503, 'A'-wing, Delphi, Orchard Avenue Road, Powai Mumbai Phone- 022-42784300 Pincode : 400076 Email : hemendrapatil@f-f.co.in	Works-1-> Others M/s Endress & Hauser, Aurangabad, Maharastra -Aurangabad-MAHARASHTRA INDIA Phone- FAX : Pincode : Email : Works-2-> + Others M/s Endress & Hauser, Bhiwandi,Thane -Thane-MAHARASHTRA INDIA Phone- FAX : Pincode : Email :	C&I			04-Nov-16	100	1				Exclusive partner for bidding of BHEL tender for M/s Endress & Hauser make Ultrasonic Flowmeter and MOU agreement valid upto 30.06.2018 , Manufacturing works at M/s Endress & Hauser, Aurangabad, Maharashtra and M/s Endress & Hauser, Bhiwandi, Thane, Maharashtra , ,
343	145-42000-A	ULTRASONIC FLOW METERS	I0007912	N209	NIVUS GMBH		REGULAR	Mr. Marcus Fischer Im Taele 2, D - 75031 Eppingen Phone-00491712233770 Pincode : Email : carolin.schuster@nivus.com	Works-1->Mr. Marcus Fischer CEO Im Taele 2, Eppingen, -Baden Wuerttemberg,-Foreign Country GERMANY Phone- 0049-726291910 FAX : Pincode : 75031 Email : carolin.schuster@nivus.com	C&I			05-Jul-16						M/s Automation and Maintenance Systems approved as authorised distributor of M/s Nivus GmbH w.e.f. 01.11.2016 , , ,

344	145-43000-A	FLOW ELEMENT - ORIFICE	I0007911	T211	TANSA EQUIPMENTS PVT. LTD.	, 27AAACT6222A1ZV	REGULAR	Mr. Vardhan Tamhankar, Unit No35/36/41,Om Anand Industrial Est. Mohanjee Sundarjee Road,Raghunath Nagar, Thane Phone- 022-25832323 Pincode : 400604 Email : tansaindia@gmail.com	Works-1-> Others Mohanjee Sundarjee Road, Raghunath Nagar, Thane -Mumbai-MAHARASHTRA INDIA Phone- FAX : Pincode : 400604 Email :	C&I			29-Nov-16						, , ,
345	145-43000-A	FLOW ELEMENT - ORIFICE	I0001885	M075	MINCO (INDIA) PRIVATE LIMITED		REGULAR	Mr. Rajeev Vasudeva, D/35, TIVIM INDUSTRIAL ESTATE, KARASWADA, MAPUSA, Goa, Phone-9313637073 Pincode : 403526, Email : gicdelhi@general-gauges.com	Works-1-> D/35,TIVIM INDUSTRIAL ESTATE, KARASWADA,MAPUSA, -Goa-Goa India Phone- 9320197825, FAX : 0832-2257262, Pincode : 403526, Email : santoshkumar@general-gauges.com	C&I			03-May-13				Small	1-Jun-20	Hold uplifted w.e.f. 27.12.2017. , , Suspension Delisting w.e.f. 11.08.2015 due to non participation in RA for Banharpalli Project for Flow Orifice. Hold uplifted w.e.f. 27.12.2017. ,
346	145-43000-A	FLOW ELEMENT - ORIFICE	I0002862	S158	SCIENTIFIC DEVICES (BOMBAY) PVT LTD,		REGULAR	Office no. 53, Shree Manoshi Complex, Plot No. 5 & 6, Sec-3, Ghansoli (East), Navi Mumbai, Phone-9892230623, Pincode : 400 701, Email : sdbpl@vsnl.com	Works-1->Scientific Center, Others By-Pass Junction,Near Kalsekar College kausa, mumbra,Thane -Mumbai-MAHARASHTRA INDIA Phone- 022-25491409,9892230623 FAX : Pincode : 400612 Email : sdbpl@vsnl.com	C&I			31-May-17				Small	22-Feb-21	, , ,
347	145-43000-A	FLOW ELEMENT - ORIFICE	I0007550	E211	Electronet Equipments Pvt Ltd.	, 27AABCE2486N1Z8	REGULAR	Mr. Rajendra Nagaonkar/MD, Plot No. 84, 85 & 86, Tiny Industrial Estate Kondhwa Budruk, Pune Phone-9822015256 Pincode : 411048 Email : ho@eeplindia.com	Works-1-> Others Plot No. 84, 85 & 86, Tiny Industrial Estate, Kondhwa Budruk -Pune-MAHARASHTRA INDIA Phone- 20-26932039 FAX : 20-26934122 Pincode : 411048 Email : ho@eeplindia.com	C&I			13-Jun-19				Small	26-Jul-21	, , ,
348	145-43000-A	FLOW ELEMENT - ORIFICE	I0000348	I006	INSTRUMENTATION LTD.	, 32AAACL4212G1Z6	REGULAR	KANJIKODE WEST, PALALKKAD, PALAKKAD Phone- 2566127-130,2567128 Pincode : 678623 Email : icvldil@gmail.com;fa2@ilpgt.com	Works-1->D.SASIDHARAN, AGM(Works&PPC) KANJIKODE WEST, PALAKKAD-KERALA INDIA Phone-0491-2566536 FAX : 0491-2566135 Pincode : 678623 Email : sasidharan@ilpgt.com;mraj@ilpgt.com;gireesh@ilpgt.com, commercial@ilpgt.com;fa2@ilpgt.com;nazeera@ilpgt.com;pkv@ilpgt.com;remith@ilpgt.com	C&I									SICK PSU. BIFR CASE. , , ,
349	145-43000-A	FLOW ELEMENT - ORIFICE	I0001883	M009	MICRO PRECISION PRODUCTS PVT. LTD.	, 06AAACM8433C1ZT	REGULAR	Mr. Anil Bhati, H.B. No.-40, Revenue Estate, Village-Dudhola,Tehsil & Distt. Palwal FARIDABAD Phone-9560742713;09560742713 Pincode : 121002 Email : anil.bhati@wika.com	Works-1->Mr. SANJEEV CHAUHAN ,H.B. No.-40 Others Revenue Estate, Village-Dudhola, Tehsil & Distt.-Palwal -Faridabad-Haryana India Phone-9560742713 FAX : Pincode : 121002 Email : anil.bhati@wika.com	C&I			15-Nov-11	87	3		Small	21-Sep-14	REGISTERED AS MSED VENDOR W.E.F.15.11.2011 FOR FY 2011-12. , New Works "H.B. No.-40, Revenue Estate, Village-Dudhola, Faridabad-121102 , Haryana " approved w.e.f. 07.05.2018 due to shifting. , ,
350	145-43000-A	FLOW ELEMENT - ORIFICE	I0004404	M201	MINCO (INDIA) FLOW ELEMENTS PVT. LTD.	, 30AAACT1740K1ZQ	REGULAR	Mr. Raghavendra M. Kulkarni D2-49/50, Tivim Industrial Estate, Karaswada Mapusa Phone-0832-2257059 Pincode : 403526 Email : gicflowelement@giconindia.com	Works-1->Mr. Raghavendra M. Kulkarni Dir D2-49/50, Tivim Industrial Estate,Karaswada -Mapusa-GOA INDIA Phone- 0832-2257059 FAX : 022-24455026 Pincode : 403526 Email : gicflowelement@giconindia.com	C&I			28-Apr-17						, , ,
351	145-43000-A	FLOW ELEMENT - ORIFICE	I0002958	S044	STAR-MECH CONTROLS (I) PVT LTD.	, 27AACCS5874R1ZF	REGULAR	SUSHILLOTAM, SUSHILLOTAM, 29/3A/3, SASANE NAGAR, HADAPSAR, PUNE Phone-02026970450 Pincode : 411028 Email : marketing@starmech.net	Works-1->VIVEK GOTE/ MAHüNDRA BANSODE Sr no.54, Plot No.II0,Swami VIvekanand Industrial Est.HADAPS -PUNE-MAHARASHTRA INDIA Phone-02026970450 FAX : 02026970470 Pincode : 411028 Email : marketing@starmech.net	C&I				100	3		Small	30-Sep-20	, , ,
352	145-43000-A	FLOW ELEMENT - ORIFICE	I0001861	C203	CHEMTROLS INDUSTRIES PVT. LTD.		REGULAR	Mr. K. NANDAKUMAR AMAR HILL, SAKI VIHAR ROAD, POWAI, MUMBAI Phone- 022-67151261 Pincode : 400072 Email : manikandan@chemtrols.com	Works-2->+Works -II :M/s Chemtrols Samil (I) Pvt. Ltd.,Plot No.F-43,44 Others Additional Ambernath Industrial ,M.I.D.C., Ambernath -Thane-MAHARASHTRA INDIA Phone- 22-67151261,9821014902 FAX : 91-22-28571913 Pincode : 421503 Email : manikandan@chemtrols.com	C&I			08-Aug-17				Small	19-Jun-18	, , ,
353	145-43000-A	FLOW ELEMENT - ORIFICE	I0001886	I030	INSTRUMENTATION ENGINEERS PVT LTD	, 36AACI4471N1Z9	REGULAR	SH.N.V.RAM GOPAL/MS. N.NIHARIKA PLOTS 1,2,3, PHASE-III, IDA, JEEDIMETLA HYDERABAD Phone-9848407365 Pincode : 500055 Email : iedelhi@ieflowmeters.com	Works-1->MR. A.V.MURTHY/MR. K.T. RAVISANKER PLOTS 1,2,3, PHASE-III,IDA, JEEDIMETLA -HYDERABAD-TELANGANA INDIA Phone-9885107312 FAX : 040-23096401 Pincode : 500055 Email : sales@ieflowmeters.com	C&I			11-Apr-13	79	2		Small	4-Jan-19	, , ,
354	145-43000-A	FLOW ELEMENT - ORIFICE	I0004216	D212	DYNAFLUID VALVES AND FLOW CONTROLS (P) LTD.	, 29AAHCM0681M1ZZ	REGULAR	Mr. Yogish M. Kulkarni Plot # 23, Udyambag, Belgaum Phone- 0831-4210386 Pincode : 590008 Email : yogish@dyna-fluid.com	Works-1->Mr. Yogish M. Kulkarni Dir Plot # 23, Udyambag, -Belgaum-KARNATAKA INDIA Phone- 0831-4210386 FAX : 0831-4210386 Pincode : 590008 Email : yogish@dyna-fluid.com	C&I			05-Aug-16						, , ,

355	145-44000-A	FLOW ELEMENT - NOZZLE	I0001883	M009	MICRO PRECISION PRODUCTS PVT. LTD.	, 06AACM8433C1ZT	REGULAR	Mr. Anil Bhati, H.B. No.-40, Revenue Estate, Village-Dudhola,Tehsil & Distt. Palwal FARIDABAD Phone- 9560742713;095607427 Pincode : 121002 Email : anil.bhati@wika.com	Works-1->Mr. SANJEEV CHAUHAN ,H.B. No.-40 Others Revenue Estate, Village-Dudhola, Tehsil & Distt.-Palwal - Faridabad-Haryana India Phone- 9560742713 FAX : Pincode : 121002 Email : anil.bhati@wika.com	C&I			15-Nov-11	85	3		Small	21-Sep-14	REGISTERED AS MSED VENDOR W.E.F.15.11.2011 FOR FY 2011-12. , New Works "H.B. No.-40, Revenue Estate, Village-Dudhola, Faridabad-121102 , Haryana " approved w.e.f. 07.05.2018 due to shifting. , ,
356	145-44000-A	FLOW ELEMENT - NOZZLE	I0004404	M201	MINCO (INDIA) FLOW ELEMENTS PVT. LTD.	, 30AAACT1740K1ZQ	REGULAR	Mr. Raghavendra M. Kulkarni D2-49/50, Tivim Industrial Estate, Karaswada Mapusa Phone 0832-2257059 Pincode : 403526 Email : gicflowelement@giconindia.com		C&I			02-Feb-15						, , ,
357	145-44000-A	FLOW ELEMENT - NOZZLE	I0002958	S044	STAR-MECH CONTROLS (I) PVT.LTD.	, 27AACCS5874R1ZF	REGULAR	SUSHILLOTAM, SUSHILLOTAM, 29/3A/3, SASANE NAGAR, HADAPSAR, PUNE Phone- 02026970450 Pincode : 411028 Email : marketing@starmech.net	Works-1->VIVEK GOTE/ MAHENDRA BANSODE Sr no.54, Plot No.II0,Swami VIVekanand Industrial Est.HADAPS - PUNE-MAHARASHTRA INDIA Phone- 02026970450 FAX : 02026970470 Pincode : 411028 Email : marketing@starmech.net	C&I				86.33	3		Small	30-Sep-20	, , ,
358	145-44000-A	FLOW ELEMENT - NOZZLE	I0004216	D212	DYNAFLUID VALVES AND FLOW CONTROLS (P) LTD.	, 29AAHCM0681M1ZZ	REGULAR	Mr. Yogish M. Kulkarni Plot # 23, Udyambag, Belgaum Phone- 0831-4210386 Pincode : 590008 Email : yogish@dyna-fluid.com	Works-1->Mr. Yogish M. Kulkarni Dir Plot # 23, Udyambag, -Belgaum-KARNATAKA INDIA Phone- 0831-4210386 FAX : 0831-4210386 Pincode : 590008 Email : yogish@dyna-fluid.com	C&I			05-Aug-16						, Technical limit reviewed on 30.10.2017. , ,
359	145-44000-A	FLOW ELEMENT - NOZZLE	I0000348	I006	INSTRUMENTATION LTD.	, 32AAACL4212G1Z6	REGULAR	KANJIKODE WEST, PALALKKAD, PALAKKAD Phone- 2566127-130,2567128 Pincode : 678623 Email : icvldil@gmail.com;fa2@ilpgt.com	Works-1->D.SASIDHARAN, AGM(Works&PPC) KANJIKODE WEST, PALAKKAD-KERALA INDIA Phone- 0491-2566536 FAX : 0491-2566135 Pincode : 678623 Email : sasidharan@ilpgt.com;mraj@ilpgt.com; gireesh@ilpgt.com, commercial@ilpgt.com; fa2@ilpgt.com; nazeera@ilpgt.com;pkv@ilpgt.com;remith@ilpgt.com	C&I				85	3				SICK PSU. BIFR CASE. , , ,
360	145-44000-A	FLOW ELEMENT - NOZZLE	I0001885	M075	MINCO (INDIA) PRIVATE LIMITED		REGULAR	Mr. Rajeev Vasudeva, D/35, TIVIM INDUSTRIAL ESTATE, KARASWADA, MAPUSA, Goa, Phone- 9313637073 Pincode : 403526, Email : gicdelhi@general-gauges.com	Works-1-> D/35,TIVIM INDUSTRIAL ESTATE, KARASWADA,MAPUSA, -Goa-Goa India Phone- 9320197825, FAX : 0832-2257262, Pincode : 403526, Email : santoshkumar@general-gauges.com	C&I							Small	1-Jun-20	NO FURTHER TENDER/P.O. TILL FINAL REVIEW AFTER 3rd ORDER EXECUTION.Hold uplifted w.e.f. 27.12.2017. , , Suspension Delisting w.e.f. 11.08.2015 due to non participation in RA for Banharpalli Project for Flow Orifice. Hold uplifted w.e.f. 27.12.2017. ,
361	145-45000-A	INSTRUMENT FITTINGS	I0002048	H61	HP VALVES & FITTINGS INDIA PVT. LTD.	, 33AACCH0510P1ZU	REGULAR	S. Harichandran/P.S. Pandi B-11, Mugappair Industrial Estate, CHENNAI Phone- 044 26252537 Pincode : 600037 Email : sales@hpvalvesindia.com	Works-1->S. Harichandran/ P.S. Pandi B-11, Mugappair Industrial Estate, -CHENNAI-TAMIL NADU INDIA Phone- 044-25252537 FAX : 044-26252538 Pincode : 600037 Email : sales@hpvalvesindia.com	C&I			30-May-12	75	2		Small	13-Jun-18	, , ,
362	145-45000-A	INSTRUMENT FITTINGS	I0002940	A121	Arya Crafts & Engineering Pvt. Ltd.		REGULAR	Mr.Sanjay Brahman/Mr.Shyam Vazirani 102, Vora Industrial Estate No.4 Navghar, Vasai Road (E) Dist.Thane, Mumbai Phone- +91-250-2392246 Pincode : 401210 Email :		C&I			16-Jun-12				Small	29-Jun-18	, , ,
363	145-45000-A	INSTRUMENT FITTINGS	I0002049	P81	Perfect Instrumentation Control (India) Pvt. Ltd.		REGULAR	MD Hussain Shaikh/Shahanawaz Khan Gala No. 168, Lohekl Chwal,216/ 218, Maulana Azad Rd. Nagpada Junction Mumbai Phone- 91-9324383121 Pincode : 400008 Email : shahanawaz.khan@perfectinstrumentation.com	Works-1->Shahanawaz Khan Vishweshwar Ind. Premises Co-op Soc. Ltd,F-18/19, Pradhikaran,Bhosadi MIDC -PUNE-MAHARASHTRA INDIA Phone- 020-30694134 FAX : 022-23013010 Pincode : 411026 Email : shahanawaz.khan@perfectinstrumentation.com	C&I			23-Mar-12						, , ,
364	145-45000-A	INSTRUMENT FITTINGS		F040	FLUIDFIT ENGINEERS PVT. LTD.		REGULAR	Mr. Abbas Bhola Potia Building No. 2, Office No. 3,292, Bellasis Road,Mumbai Central (East) Mumbai Phone- 9920044113 Pincode : 400008 Email :	Works-1->Mr. Abbas Bhola Unit No. 16, Supreme Industrial Estate,Kaman Bhiwandi Road,Devdal, -Vasai East-MAHARASHTRA India Phone- 9920044113 FAX : 07303178243 Pincode : 401208 Email : ab@fluidfitengg.com	C&I			15-Jan-14				Small	23-Feb-17	Registered as per 22nd Electrical and C&I MISCC Meeting dtd. 15.01.2014 , , ,
365	145-45000-A	INSTRUMENT FITTINGS	I0002047	V039	VIKAS INDUSTRIAL PRODUCTS		REGULAR	S.R.SINGH/NAVEEN SINGH B - 2, SECTOR - 6, NOIDA Phone- +91-9810122070 Pincode : 201301 Email :	Works-1->S.R.SINGH/ NAVEEN SINGH B - 2, SECTOR - 6, -NOIDA-UTTAR PRADESH INDIA Phone- 0120-4352940 FAX : 0120-4352940 Pincode : 201301 Email :	C&I		Over all financial limit for ordering as Rs.30 lacs (Rs.Thirty Lacs).	14-Feb-12						, Financial limit reviewed on 05.06.2014 , ,

366	145-45000-A	INSTRUMENT FITTINGS	I0001001	P082	PANAM ENGINEERS		REGULAR	Mr. Santosh Shukla 203, Jaisingh Business,Parsiwada, Saha road,Andheri(East), Mumbai, Phone-9892179529, Pincode : 400099, Email : santosh@panamengineers.com,	Works-1->Mr. Santosh Shukla Others R-628,TTC Industrial Area, MIDC Rabale, -Navi Mumbai-MAHARASHTRA India Phone- 9821350761, FAX : 022-27695559, Pincode : 400701, Email : sales@panamengineers.com	C&I			07-Feb-13						, , ,
367	145-45000-A	INSTRUMENT FITTINGS	I0001307	H024	Fluid Controls Pvt. Ltd.		REGULAR	Sophie Y. Moochhala/Mayur Rajput J.V.PATEL, I.T.I CMPD, B.MADHUKAR MARG, ELPHINSTONE ROADSTN.(WR), MUMBAI Phone- (022) 43338000 Pincode : 400013 Email : sales@fluidcontrols.com	Works-1->Mr. Tansen Choudhari/Mr. Mahesh Darekar Shed No.8, Lonavla Indl.Co-op.Estate Ltd,Nagargaon, -Lonavla-MAHARASHTRA INDIA Phone-9823951347 FAX : (0211-4) 271132 Pincode : 410 401 Email : factory@hyd-air.com	C&I			14-Feb-12						Name changed from M/s Hyd-Air Valves Pvt. Ltd. to M/s Fluid Controls Pvt. Ltd. as per 25th MISCC-Electrical and C&I dtd. 20.02.2014, , ,
368	145-45000-A	INSTRUMENT FITTINGS	I0001335	P046	PRECISION ENGINEERING INDUSTRIES		REGULAR	K. SITARAM/ K. SRINIVAS 7,SIDHAPURA INDUSTRIAL ESTATE S.V. ROAD,GOREGAON(W) MUMBAI Phone- 022 42631700 Pincode : 400 062 Email : peiks@vsnl.com	Works-1->ALEX BAPTIST/ K. SRINIVAS 7. SIDHAPURA INDUSTRIAL ESTATE,SV ROAD, GOREGAON(WEST) -MUMBAI-MAHARASHTRA INDIA Phone 022-42631700 FAX : 022-40035259 Pincode : 400 062 Email : srinivas@precision-engg.com	C&I			14-Feb-12						, , ,
369	145-45000-A	INSTRUMENT FITTINGS	I0002051	A079	AURA INCORPORATED		REGULAR	NIRAJ SHARAN/SUJIT KUMAR W-167A, GREATER KAILASH-II NEW DELHI Phone-9810182430 Pincode : 110048 Email :		C&I			27-Jan-09						, , ,
370	145-45000-A	INSTRUMENT FITTINGS	I0000586	C067	Comfit & Valve Pvt. Ltd.		REGULAR	Mr. Jeetu Jain/Mr. Vinay Sosa Survey No. 23/1, Part 2, Ahmedabad-Mehsana Highway Laxmipura, Nandasan Phone- 02764-267036/37 Pincode : 382705 Email : marketing@com-fit.com	Works-1->Miss Sonal Pithadia/Miss Pavan Chavda Survey No. 23/1, Part 2, Ahmedabad-Mehsana Highway, Laxmipura -Nandasan-GUJARAT INDIA Phone- 8460848087 FAX : 2764-267036/37 Pincode : 382705 Email : domestic@com-fit.com	C&I			29-Feb-12						, , ,
371	145-47000-A	ELECTROMAGNETIC FLOW METER	I0001391	A216	Adept Fluidyne Pvt. Ltd.	, 27AABCA5165G1ZT	REGULAR	Vinayak Gadre Plot No 4,S.No.17/1-B Kothrud Industrial Estate Pune Phone- 020 25464551 Pincode : 411038 Email : info@adeptfluidyne.com	Works-1-> Plot No 4,S.No.17/1-B Kothrud Industrial Estate -Pune-MAHARASHTRA India Phone- 020 25464551 FAX : Pincode : 411038 Email : info@adeptfluidyne.com	C&I			12-Sep-16				Small	29-Feb-20	, , ,
372	145-47000-A	ELECTROMAGNETIC FLOW METER	I0007550	E211	Electronet Equipments Pvt Ltd.	, 27AABCE2486N1Z8	REGULAR	Mr. Rajendra Nagaonkar/MD, Plot No. 84, 85 & 86, Tiny Industrial Estate Kondhwa Budruk, Pune Phone-9822015256 Pincode : 411048 Email : ho@eeplindia.com	Works-1-> Others Plot No. 84, 85 & 86, Tiny Industrial Estate, Kondhwa Budruk -Pune-MAHARASHTRA INDIA Phone- 20-26932039 FAX : 20-26934122 Pincode : 411048 Email : ho@eeplindia.com	C&I			12-Sep-16				Small	26-Jul-21	, , ,
373	145-47000-A	ELECTROMAGNETIC FLOW METER		V212	V.A Valves	, 03AADFV5931A1ZO	REGULAR	Mr.Vishal Jain, Udyog Nagar, Gadaipur, Jalandhar Phone-9872626376 Pincode : 144004 Email : support@fedrelflowmeters.com	Works-1->Mr.Vishal Jain Dir Udyog Nagar, Gadaipur, -Jalandhar-PUNJAB INDIA Phone-01812601741,9872626376 FAX : Pincode : 144004 Email : support@fedrelflowmeters.com	C&I			14-Sep-18						, , ,
374	145-47000-A	ELECTROMAGNETIC FLOW METER	I0002862	S158	SCIENTIFIC DEVICES (BOMBAY) PVT LTD,		REGULAR	Office no. 53, Shree Manoshi Complex, Plot No. 5 & 6, Sec-3, Ghansoli (East), Navi Mumbai, Phone-9892230623, Pincode : 400 701, Email :	Works-1->Scientific Center, Others By-Pass Junction,Near Kalsekar College kausa, mumbra,Thane -Mumbai-MAHARASHTRA INDIA Phone- 022-25491409,9892230623 FAX : Pincode : 400612 Email : sdbpl@vsnl.com	C&I			31-May-17				Small	22-Feb-21	, , ,
375	145-47000-A	ELECTROMAGNETIC FLOW METER		N040	NIVO CONTROLS PVT. LTD.		REGULAR	Mr. Praveen Toshniwal 104-115, Electronic Complex, Indore Phone-0731-4081305 Pincode : 452010 Email : sales@nivocontrols.com	Works-1->Mr. S L Sadani Others 104 115,Electronic Complex -Indore-MADHYA PRADESH INDIA Phone- 0731 4081307 FAX : Pincode : 452010 Email : sales@nivocontrols.com;sadanis@nivo	C&I			18-Jan-20				Small	30-Sep-19	Supplier registered as per 15th MISCC- Electrical and C&I dated 18.01.2020, , ,

CLAUSE NO.	SCOPE OF SUPPLY AND SERVICES

E

LIST OF ANALYSERS:

Sample	Measurements
Makeup DM water	**Degassed Cation Conductivity (DCC)**
CEP discharge	**Degassed Cation Conductivity (DCC),** Sodium, pH, Dissolved Oxygen
CPU outlet	Specific Conductivity, Cation Conductivity, Silica, Sodium, pH
Deaerator	pH, Dissolved Oxygen
FW at Eco inlet	DEGASSED CATION CONDUCTIVITY ANALYSER, Silica, Sodium, pH, Hydrazine, Dissolved Oxygen , Turbidity, Iron Analyser
Separator outlet (Steam)	Specific Conductivity, Cation Conductivity
Sat. Water BCW Discharge	Specific Conductivity, Cation Conductivity, Silica, Sodium, Hydrazine, Dissolved Oxygen
Main Steam - HTSH O/L	Specific Conductivity, Cation Conductivity, Silica, Sodium, pH
Hot Reheated steam	Specific Conductivity, Cation Conductivity
Closed circuit CW (ECW-SG)	pH
Condenser CW	Specific Conductivity, pH
Hotwell	Specific Conductivity
Closed circuit CW (ECW-TG)	pH

Note:
1. Multistream for Silica and Sodium Analyser shall be acceptable. Multistream analysers shall have at least one stream as spare. external channel sequencer has to be considered by bidder.
2. Any Other analyser as recommended by Contractor or Equipment OEM shall be supplied by Contractor within the contract price
3. Specific Conductivity, Cation Conductivity, Silica Analyser, Sodium Analyser have already been indicated in the P&ID and in Bidder's Scope. However, one common pH analyser at the common outlet of CPU for each TG unit is also in Bidder's Scope.

714406/2022/PS-PEM-MAX

SECTION – III

LIST OF DOCUMENTS TO BE SUBMITTED ALONG WITH BID

1.0 Bidder to furnish following documents/information along with the bid (For Electrical and C&I Please Refer the Respective Section of the Specification).

- Deviation if any strictly in the enclosed Schedule of deviation with cost of withdrawal only with mention of specification clause for which deviation is being asked. (Stamped & Signed). In case of No Technical Deviation, bidder to furnish the same format stating “No Deviation” duly Stamped & Signed.
- Compliance certificate. (Stamped & Signed)
- Schedule of Declaration. (Stamped & Signed)
- Un Price Schedule duly filled in. (Stamped & Signed)

Any other documents submitted by bidder except as asked in the bid’s specification shall not be evaluated & considered as null & void.

NOTES:

1) Any item/work either supply of equipment or erection material which have not been specifically mentioned but are necessary to complete the works for trouble free and efficient operation of the plant shall be deemed to be included within the scope of this specification. The bidder without any extra charge shall provide the same.

2) All drawings/documents shall be approved by BHEL/Customer during detailed engineering stage. Successful Bidder shall comply with the comment of the customer/BHEL without any price & delivery implication.

COMPLIANCE CUM CONFIRMATION CERTIFICATE

The bidder shall confirm compliance with following by signing/ stamping this compliance certificate and furnishing same with the offer:

1. The scope of supply, technical details, construction features, design parameters etc. shall be as per technical specification & there are no exclusions/ deviations with regard to same.
2. QP/ test procedures shall be submitted in the event of order based on the guidelines given in the specification & QP enclosed therein.
3. QP will be subject to BHEL/Customer approval in the event of order & customer hold points for inspection/ testing shall be marked in the QP at the contract stage. Inspection/ testing shall be witnessed as per same apart from review of various test certificates/ Inspection records etc. The charges for 3rd party inspection (Lloyds, TUV or equivalent) for imported components shall be included in the base price of the equipment by the bidder.
4. All drawings/data – sheets etc. to be submitted during contract shall be subject to BHEL/Customer review/ approval. GA drawings, as submitted with offer at tender stage are for reference purpose only and shall be subject to approval during contract stage.
5. There are no other deviations with respect to specification other than those furnished in the 'Schedule of Deviations'.
6. The offered materials shall be either equivalent or superior to those specified. Also for components where material is not specified it shall be suitable for intended duty, materials shall be subject to approval in the event of order.
7. The commissioning spares (if any) are supplied on 'As Required Basis' & prices for same included in the base price (If bidders reply to this is "No commissioning spares are required" and if some spares are actually required during commissioning same shall be supplied by bidder without any cost to BHEL and Customer).
8. All sub vendors shall be subject to BHEL/CUSTOMER approval.
9. Any special tools & tackles, if required, shall be in bidder's scope.
10. Performance guarantee test parameters shall stand valid till the satisfactory completion of Performance guarantee test and its acceptance by BHEL and Customer.

714406/2022/PS-PEM-MAX

BHEL	TECHNICAL SPECIFICATION FOR CONDENSATE POLISHING UNIT 2X660 MW KHURJA STPP	BHEL DOCUMENTS NO.: PE-TS-475-155-A001	
		VOLUME IIB	
		SECTION – III	
		REV. NO. 00	DATE:

PRE BID CLARIFICATION SCHEDULE

All clarification from the Technical Specification shall be filled in by the BIDDER clause by clause in this format only.

VOLUME	SECTION	CLAUSE NO.	PAGE NO.	SPECIFICATION REQUIREMENT	CLARIFICATION	REASONS FOR CLARIFICATION

PARTICULARS OF BIDDER / AUTHORISED REPRESENTATIVE				
NAME	DESIGNATION	SIGNATURE	DATE	COMPANY SEAL

BHEL	TECHNICAL SPECIFICATION FOR CONDENSATE POLISHING UNIT 2X660 MW KHURJA STPP	BHEL DOCUMENTS NO.: PE-TS-475-155-A001	
		VOLUME IIB	
		SECTION – III	
		REV. NO. 00	DATE:

SCHEDULE OF DECLARATION

I ……..……certify that all the technical data and information pertaining to this specification are correct and are true representation of the equipment/system covered by our format proposal number Dated ……. and there is no deviation to the specification.

I hereby certify that I am duly authorized representative of the Bidder's company whose name appears above my signature.

Bidders Company Name …….

Authorized Representative's
Signature ……..

Name …….

Bidder's Name …….

The bidder hereby agrees to fully comply with the requirements and intent of this specification for the price indicated.

DEVIATION SHEET (COST OF WITHDRAWL)
Section - III

TITLE: TECHNICAL SPECIFICATION FOR CONDENSATE POLISHING UNIT
PROJECT: 2X660 MW KHURJA STPP

TECH SPC NO: PE-TS-475-155-A001

TENDER ENQUIRY REFERENCE:-

NAME OF VENDOR:-

SL NO	VOULME/ SECTION	PAGE NO.	CLAUSE NO.	TECHNICAL SPECIFICATION/ TENDER DOCUMENT	COMPLETE DESCRIPTION OF DEVIATION	COST OF WITHDRAWL OF DEVIATION	REFERENCE OF PRICE SCHEDULE ON WHICH COST OF WITHDRAWL OF DEVIATION IS APPLICABLE	NATURE OF COST OF WITHDRAWL OF DEVIATION (POSITIVE/ NEGATIVE)	REASON FOR QUOTING DEVIATION
TECHNICAL DEVIATIONS									
COMMERCIAL DEVIATIONS									

PARTICULARS OF BIDDERS/ AUTHORISED REPRESENTATIVE

NAME	**DESIGNATIONS**	**SIGN & DATE**	

NOTES:

1. Cost of withdrawal of deviation will be applicable on the basic price (i.e, excluding taxes, duties & freight) only.
2. All the bidders has to list out all their Technical and Commercial Deviations (if any) in detail in the above format.
3. Any deviation not mentioned above and shown separately or found hidden in offer, will not be taken cognizance of.
4. Bidder shall submit duly filled unpriced copy of above format indicating "quoted" in "cost of withdrawal of deviation" column of the schedule above along with their Techno-commercial offer, wherever applicable. in the absence of same, such deviation(s) shall not be considered and offer shall be considered in total compliance to NIT
5. Bidder shall furnish price copy of above format along with price bid.
6. The final decision of acceptance/ rejection of the deviations quoted by the bidder shall be at discretion of the Purchaser.
7. Bidders to note that any deviation (technical/commercial) not listed in above and asked after Part-I opening shall not be considered.
8. For deviations w.r.t. Credit Period, Liquidated damages, Firm prices if a bidder chooses not to give any cost of withdrawal of deviation loading as per **Annexure-VII of GCC, Rev-07** will apply. For any other deviation mentioned in un-priced copy of this format submitted with Part-I bid but not mentioned in priced copy of this format submitted with Priced bid, the cost of withdrawal of deviation shall be taken as NIL.
9. Any deviation mentioned in priced copy of this format, but not mentioned in the un-priced copy, shall not be considered.
10. All techno-commercial terms and conditions of NIT shall be deemed to have been accepted by the bidder, other than those listed in un-priced copy of this format.
11. Cost of withdrawal is to be given separately for each deviation. In no event bidder should club cost of withdrawal of more than one deviation else cost of withdrawal of such deviations which have been clubbed together shall be considered as NIL.
12. In case nature of cost of withdrawal (positive/negative) is not specified it shall be assumed as positive.
13. In case of discrepancy in the nature of impact (positive/ negative), positive will be considered for evaluation and negative for ordering.