PIPING THICKNESS:

Pipes for sizes 200 NB & above shall confirm to IS: 3589 .
.
Tolerance as per code shall be applicable.

Nominal pipe Size (mm)	Outside Diameter (mm)	Wall Thickness (mm)
200 NB	219.1	6.3
250 NB	273	6.3
300 NB	323.9	6.3
350 NB	355.6	7.1
400 NB	406.4	7.1

DATA SHEETS FOR PIPES (Ventilation Systems) (150 NB & Below):

Make : As per Make List

Size : As Per Approved P& ID

Quantity : As Per Approved Layout

Design Code : Heavy Grade, IS: 1239 (Part-I) 2004

Material : GI (Galvanization as per IS 4736).

Dimensions : As per IS: 1239 (Part-I) 2004

Sizes (N.B) (MM)	Out Side Dia		Wall Thickness (MM)
	(MIN) in MM	(MAX) in MM	
15	21	21.8	3.2
20	26.5	27.3	3.2
25	33.3	34.2	4.0
32	42.0	42.9	4.0
40	47.9	48.8	4.0
50	59.7	60.8	4.5
65	75.3	76.6	4.5
80	88.0	89.5	4.8
100	113.1	115.0	5.4
125	138.5	140.8	5.4
150	163.9	166.5	5.4

DATA SHEETS FOR PIPES (Vent Systems) (200 NB & Above):

Make : As per Make List

Size : As Per Approved P& ID

Quantity : As Per Approved Layout

Design Code : Heavy Grade, IS: 3589

Material : GI.

Dimensions : As per IS: 3589, Plain end or Bevel end

DATA SHEETS FOR DRAIN & OVER FLOEW PIPES (Vent Systems):

Make	:	As per Make List
Size	:	As Per Approved P& ID
Quantity	:	As Per Approved Layout
Ref IS Standard	:	GI. Heavy Grade, IS: 1239 (Part-I) 2004
Material	:	GI.

PIPING THICKNESS:

Pipes for sizes 200 NB & above shall confirm to IS: 3589 .
.
Tolerance as per code shall be applicable.

Nominal pipe Size (mm)	Outside Diameter (mm)	Wall Thickness (mm)
200 NB	219.1	6.3
250 NB	273	6.3
300 NB	323.9	6.3
350 NB	355.6	7.1
400 NB	406.4	7.1

DATA SHEET - G.I. SHEETS (AC Systems)

1. General use	:	For ducting work
2. Sheet size (mm)	:	As Per Approved Drawings
3. Quantity (approx.) sqm	:	As Per Approved Drawings
4. Gauge	:	18 G 20 G 22 G & 24 G
5. Zinc coating	:	180 gms/ Sq. meter
6. IS standard	:	IS 277
7. Make	:	AS PER APPROVED SUB VENDOR LIST .

Thickness of GI Sheet (mm)	Larger Dimension of duct (mm)
0.63 mm (24G)	up to 750 mm
0.80 mm (22G)	751 to 1500 mm
1.00 mm (20G)	1501 to 2250 mm
1.25 mm (18G)	2251 & above

NOTE :
*VELOCITY WILL BE AS PER DUCT LAYOUTS
**CONSTRUCTION OF DUCTS SHALL CONFORM TO IS: 655
*** TYPICAL DETAILS OF DUCT FABRICATION, SUPPORT AND ERECTION WILL BE AS PER DOC NO-PE-V0-411-553-A509

Table 6 Thickness of Sheet and Type of Transverse Joint for Rectangular Duct Construction (From IS : 655)

Maximum Side	Thickness of Sheet		Type of Transverse Joint Connections	Bracing
(1) mm	GI (2) mm	Aluminium (3) mm	(4)	(5)
Up to 300	0.63	0.80	S-drive, pocket or bar slips, on 2.5 m centres	None
301 to 600	0.63	0.80	S-drive, pocket or bar slips, on 2.5 m centres	None
601 to 750			S-drive, 25-mm pocket or 25-mm bar slips on 2.5 m centres	25 X 25 X 3 mm angles, 1.2 m from joint
751 to 1000	0.80	1.00	Drive, 25-mm pocket or 25-mm bar slips, on 2.5 m centres	25 X 25 X 3 mm angles, 1.2 m from joint
1001 to 1500			40 X 40 mm angle connections, or 40-mm bar slips, with 35 X 3 mm bar reinforcing on 2.5 m centres	40 X 40 X 3 mm angles, 1.2 m from joint
1501 to 2250	1.00	1.50	40 X 40 mm angle connections, or 40-mm bar slips, 1 m maximum centres with 35 X 3 mm bar reinforcing	40 X 40 X 3 mm diagonal angles, or 40 X 40 X 3 mm angle 60 cm from joint
2251 and above*	1.25	1.80	50 X 50 mm angle connections, or 40-mm pocket or 40-mm bar slips, 1 m maximum centres with 35 X 3 mm bar reinforcing	40 X 40 X 3 mm diagonal angles or 40 X 40 X 3 mm angles, 60 cm from joint

* Ducts 2250 mm and larger require special field study for hanging and supporting methods.

Table 7 Weight of Galvanized Steel Sheets IS. 277-1977

Gauge No.	Thickness mm	Weight in kg/m² Class 1	Class 2	Class 3	Class 4
16	1.6	13.31	13.16	13.01	12.94
18	1.25	10.56	10.41	10.26	10.19
20	1.00	8.60	8.45	8.30	8.22
22	0.80	7.03	6.88	6.73	6.66
24	0.63	5.70	5.55	5.40	5.32

Note:
Class 1 : 750 g. of Zinc Coating per Sq. metre. both side inclusive
Class 2 : 600 g. of Zinc Coating per Sq. metre. both side inclusive
Class 3 : 450 g. of Zinc Coating per Sq. metre. both side inclusive
Class 4 : 375 g. of Zinc Coating per Sq. metre. both side inclusive
The latest classification as per IS 277 revised 1992, is based on thickness of Zinc Coating classified as grades. Grade 120 -600 are available. Grade 120 needs 120 gms of Zinc coating per sq. m on both sides. There are 8 grades available including Grade 120 and Grade 600, whereas 120 is the least grade and 600 is the maximum grade.

Table 8 Thickness of Sheet for Round Ducts (From IS : 655)

DIAMETER OF DUCT, mm	THICKNESS OF SHEET, mm GI Sheets	Aluminium Sheets
150 to 500	0.63	0.80
501 to 750	0.80	0.80
751 to 1000	0.80	1.00
1001 to 1250	1.00	1.50
1251 and above	1.25	1.80

Table 9
Availability of GI Sheets at Rourkela/Bhilai Steel Plants

Class of Coating	Zinc wt gm/M²	Plant
CL I	750	RSP
CL II	600	RSP
CL III	450	RSP
CL IV	375	RSP/BSL
CL V	300	RSP/BSL
CL VI	250	RSP/BSL
CL VII	200	BSL
CL VIII	175	BSL

Table 10 Allowable Trapeze Angle Loads

Width of Hanger (W), in.	Maximum Hanger Load, lb — Angle Size, in. 1 x 1 x 0.0575	1 x 1 x 1/8	1 1/2 x 1 1/2 x 0.0575	1 1/2 x 1 1/2 x 1/8	1 1/2 x 1 1/2 x 3/16	1 1/2 x 1 1/2 x 1/4 or 2 x 2 x 1/8	2 x 2 x 3/16	2 x 2 x 1/4	2 1/2 x 2 1/2 x 3/16	2 1/2 x 2 1/2 x 1/4
Up through 18	80	150	180	350	510	650	940	1230	1500	1960
24	75	150	180	350	510	650	940	1230	1500	1960
30	70	150	180	350	510	650	940	1230	1500	1960
36	60	130	160	340	500	620	920	1200	1480	1940
42	40	110	140	320	480	610	900	1190	1470	1930
48	—	80	110	290	450	580	870	1160	1440	1900
54	—	40	70	250	400	540	840	1120	1400	1860
60	—	—	—	190	350	490	780	1060	1340	1800
66	—	—	—	100	270	400	700	980	1260	1720
72	—	—	—	—	190	320	620	900	1180	1640
78	—	—	—	—	80	210	500	790	1070	1530
84	—	—	—	—	—	80	380	660	940	1400
96	—	—	—	—	—	—	—	320	600	1060
108	—	—	—	—	—	—	—	—	150	610

Table 11 Rectangular Duct Hanger Commercial Systems[a]

Half of Duct Perimeter (P/2), in.	Types of Hanger: Galvanized Straps Width x Thickness (min), in. — Maximum Hanger Spacing, ft. 10	8	5	4	Rods Diameter, in. 10	8	5	4
Up through 72	1.0 x 0.0296	1.0 x 0.0296	1.0 x 0.0296	1.0 x 0.0296	0.25	0.25	0.25	0.25
96	1.0 x 0.0466	1.0 x 0.0356	1.0 x 0.0296	1.0 x 0.0296	0.375	0.25	0.25	0.25
120	1.0 x 0.0575	1.0 x 0.0466	1.0 x 0.0296	1.0 x 0.0296	0.375	0.375	0.25	0.25
168	1.5 x 0.0575	1.0 x 0.0575	1.0 x 0.0466	1.0 x 0.0466	0.50	0.375	0.375	0.375
192	—	1.5 x 0.0575	1.0 x 0.0575	1.0 x 0.0575	0.50	0.50	0.375	0.375
over 192	—	—	—	[special analysis required]				

[a] Table based on: 1. square ducts; 2. 0.0575-in. thick ducts; 3. reinforcements and trapeze weights; 4. 1 lb/ft² for insulation; and 5. no external loads.

Maximum allowable strap and rod loads are:

Strap (W x T[min]), in.	Load, lb	Rod (dia), in.	Load, lb
1 x 0.0296	260	0.25	270
1 x 0.0356	320	0.375	680
1 x 0.0466	420	0.50	1250
1 x 0.0575	700	0.625	2000
1.5 x 0.0575	1100	0.75	3000

DATA SHEET - G.I. SHEETS (VENT Systems)

1. General use	:	For ducting work
2. Sheet size (mm)	:	As Per Approved Drawings
3. Quantity (approx.) sqm	:	As Per Approved Drawings
4. Gauge	:	18 G 20 G 22 G & 24 G
5. Zinc coating	:	180 gms/ Sq. meter
6. IS standard	:	IS 277
7. Make	:	AS PER APPROVED SUB VENDOR LIST

Thickness of GI Sheet (mm)	Larger Dimension of duct (mm)
0.63 mm (24G)	up to 750 mm
0.80 mm (22G)	751 to 1500 mm
1.00 mm (20G)	1501 to 2250 mm
1.25 mm (18G)	2251 & above

NOTE: For Battery Room Ducting : MS Ducting with epoxy painting on both sides.

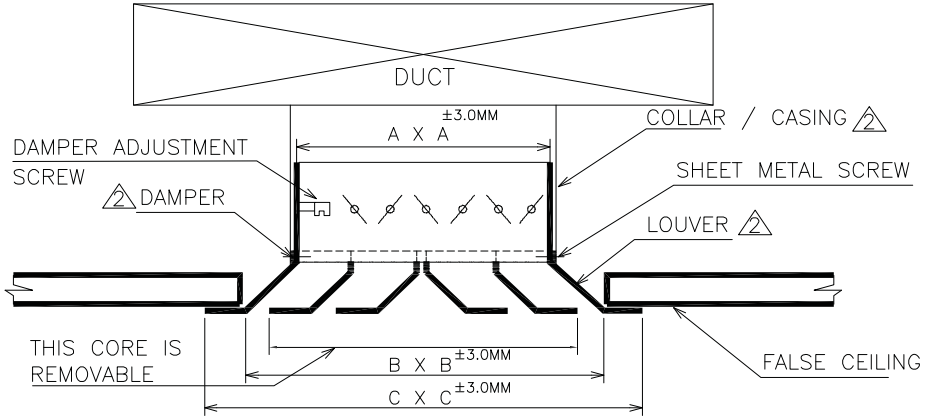

SUPPLY AIR DIFFUSER (WITH VCD)(N.T.S)

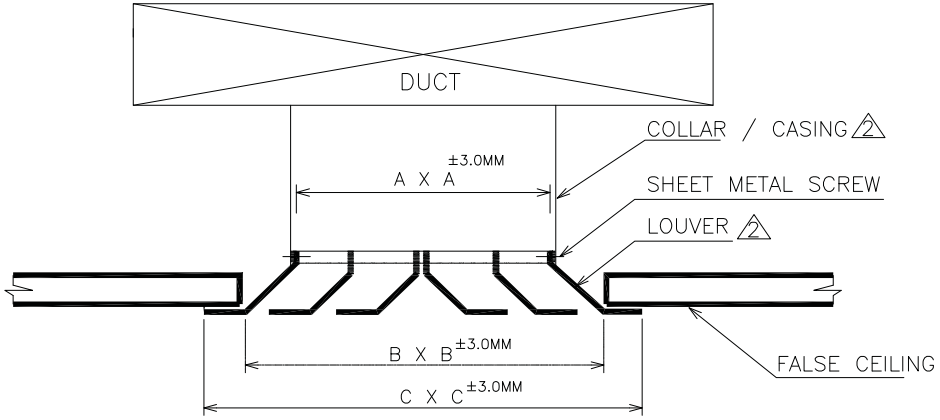

RETURN AIR DIFFUSER (WITHOUT VCD) (N.T.S)

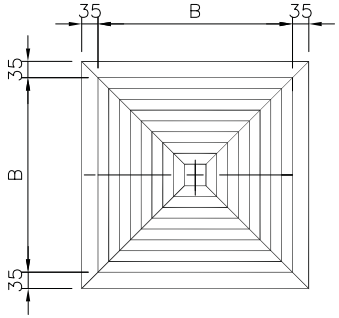

PLAN OF SUPPLY AIR DIFFUSER

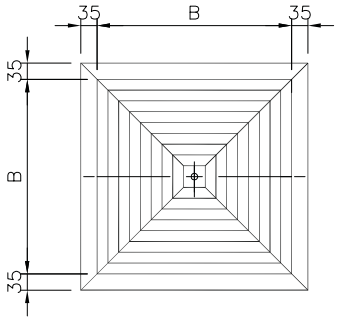

PLAN OF RETURN AIR DIFFUSER

Page 35 of 563

SCHEDULE OF SUPPLY/RETURN DIFFUSER

SR NO	NECK SIZE A x A	FACE SIZE B x B	DIFFUSER SIZE C x C
1	300 x 300	375 x 375	450 x 450
2	375 x 375	450 x 450	525 x 525
3	450 x 450	525 x 525	600 x 600

SPECIFICATION.
DIFFUSER MATERIAL–EXTRUDED ALUMINUM SECTIONS. CASING THICKNESS–1.2MM. AL. 2 VOLUME CONTROL DAMPER MATERIAL–1.0MM. AL. 2 LOUVER MATERIAL–1.2MM. AL. 2 FINISH–POWDER COATED. DIFFUSER PAINT SHADE – OFF WHITE DAMPER PAINT SHADE – BLACK (SPRAY PAINTING) DIFFUSER TYPE–REMOVABLE CORE TYPE

NOTES :

1. ALL DIMENSION ARE IN MM.
2. THE QTY. AND SIZE OF THE DIFFUSER BOTH FOR SUPPLY AND RETURN AIR HAVE BEEN WORKED OUT FROM RESPECTIVE APPROVED AC DUCTING LAYOUT DRAWING.
3. ALL TOLERANCES AS PER IS/INDUSTRY SPECIFICATION.
4. FIXING THROUGH HOLES ON FLANGE TO DONE AT SITE.
5. MAKE – AIR FLOW, TSC, AIR MASTER, CARRYAIRE & RAVISTAR (SYSTEM AIR)
6. VELOCITY CRITERIA – VELOCITY SHALL BE 2.5m/Sec. 2
7. 2 OPPOSED BLADE TYPE VOLUME CONTROL DAMPER FOR SUPPLY AIR DIFFUSER SHALL BE PROVIDED.

REV NO.	DATE	REMARKS	DRAWN NAME	DRAWN SIGN	CHECKED NAME	CHECKED SIGN
02	18.09.18	REVISED AS PER DESIGN COMMENTS	SB		SC	
01	27.07.18	REVISED AS PER DESIGN COMMENTS	SB		SC	

CUSTOMER : TELANGANA STATE POWER GENERATION CORPORATION LTD.

CUSTOMER'S CONSULTANT : DESEIN PRIVATE LIMITED

PROJECT : 4 x 270 MW BHADRADRI TPS AT MANUGURU, KHAMMAM DISTRICT, TELANGANA

BHARAT HEAVY ELECTRICALS LTD. POWER SECTOR PROJECT ENGINEERING MANAGEMENT NOIDA, (UP)

TITLE : DATA SHEET AND GA DRAWING FOR AIR TERMINALS LIKE GRILLS / DIFFUSERS / DAMPERS/ ETC

Drg No. PE–V0–411–553–A220 | SCALE – NTS. | SHEET 2 of 4 | REV. 02

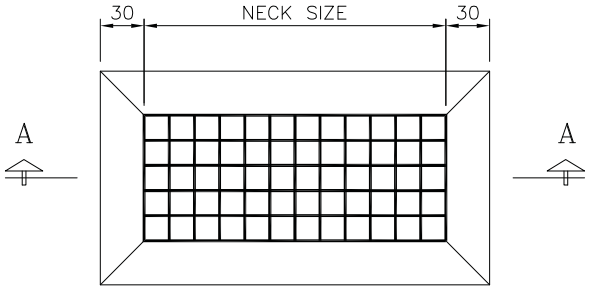

DETAIL OF SUPPLY AIR GRILLE (TYPICAL)

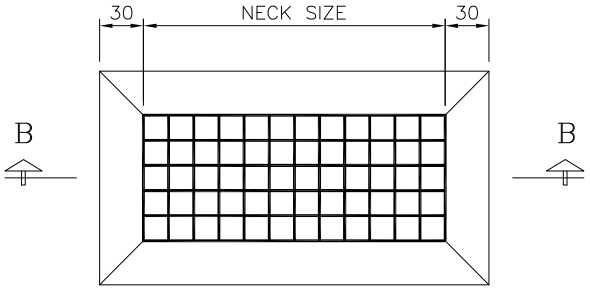

DETAIL OF RETURN AIR GRILLE (TYPICAL)

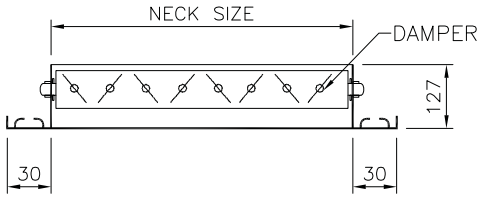

SECTION ON–A–A

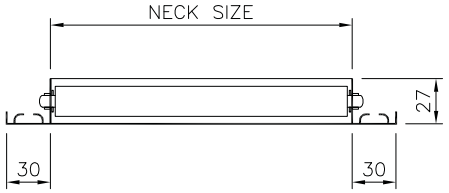

SECTION ON–B–B

SPECIFICATION.
GRILLE MATERIAL–EXTRUDED ALUMINUM SECTIONS. CASING THICKNESS–1.2MM. AL. 2 VOLUME CONTROL DAMPER MATERIAL – 1.0MM. AL. 2 LOUVER MATERIAL–1.2MM. AL. 2 FINISH–POWDER COATED. GRILLE PAINT SHADE – OFF WHITE

NOTES :

1. ALL DIMENSION ARE IN MM.
2. THE QTY. AND SIZE OF THE GRILLE BOTH FOR SUPPLY AND RETURN AIR HAVE BEEN WORKED OUT FROM RESPECTIVE APPROVED AC DUCTING LAYOUT DRAWING.
3. ALL TOLERANCES AS PER IS/INDUSTRY SPECIFICATION.
4. DOUBLE DEFLECTION TYPE GRILLE FOR VENTILATION SYSTEM.
5. VELOCITY CRITERIA – VELOCITY SHALL BE 2.5m/Sec. 2
6. OPPOSED BLADE TYPE VOLUME CONTROL DAMPER FOR SUPPLY AIR DIFFUSER SHALL BE PROVIDED. 2

REV NO.	DATE	REMARKS	DRAWN NAME	DRAWN SIGN	CHECKED NAME	CHECKED SIGN
02	18.09.18	REVISED AS PER DESIGN COMMENTS	SB		SC	
01	27.07.18	REVISED AS PER DESIGN COMMENTS	SB		SC	

CUSTOMER :	TELANGANA STATE POWER GENERATION CORPORATION LTD.
CUSTOMER'S CONSULTANT	DESEIN PRIVATE LIMITED
PROJECT :	4 x 270 MW BHADRADRI TPS AT MANUGURU, KHAMMAM DISTRICT, TELANGANA
	BHARAT HEAVY ELECTRICALS LTD. POWER SECTOR PROJECT ENGINEERING MANAGEMENT NOIDA, (UP)

TITLE : DATA SHEET AND GA DRAWING FOR AIR TERMINALS LIKE GRILLS / DIFFUSERS / DAMPERS/ ETC

Drg No. PE-V0-411-553-A220 | SCALE – NTS. | SHEET 3 of 4 | REV. 02

DRAWING No. PE-V0-411-553-A220

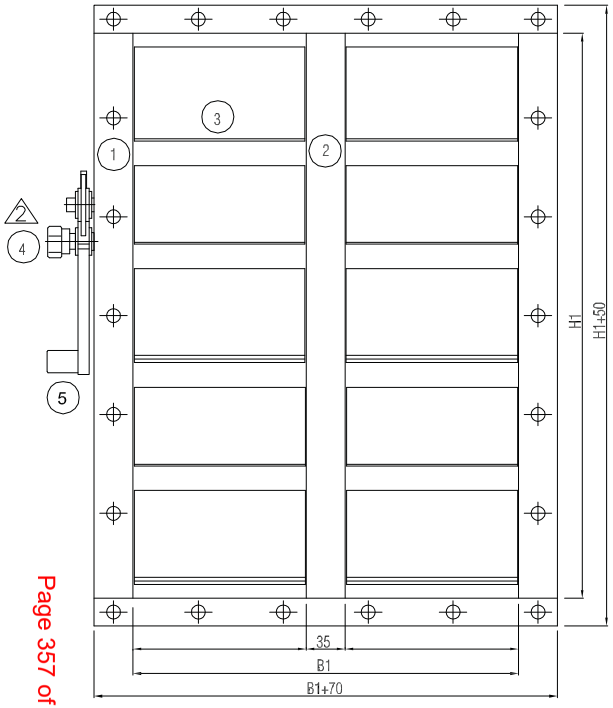

ELEVATION

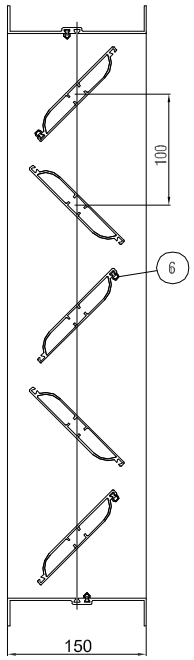

SIDE VIEW

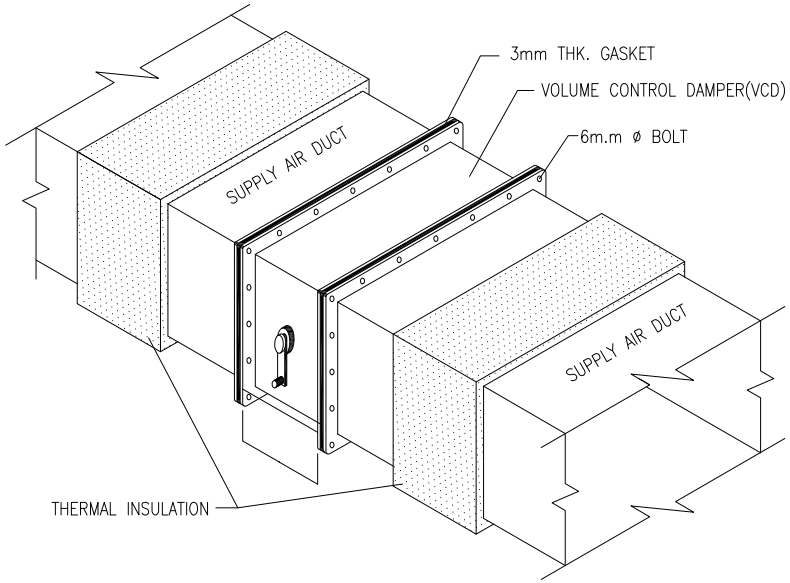

TYPICAL VCD FIXING ARRANGEMENT

CONSTRUCTION AND DIMENSIONS:

COMPONENT PARTS:

1. CASING / FRAME GI. 18G SECTIONS.
2. BAR OF MS. SECTIONS.
3. BLADE MADE GI. 20G SECTIONS.
4. MS GEAR WHEEL.
5. HANDLE FOR MANUAL CONTROL AND LOCKING MADE OF MS. ALLOY.
6. BLADE LOCKING MADE OF MS. ALLOY. (2)
7. VELOCITY CRITERIA – VELOCITY SHALL BE 2.5m/Sec. (2)

REV NO.	DATE	REMARKS	DRAWN NAME	DRAWN SIGN	CHECKED NAME	CHECKED SIGN
02	18.09.18	REVISED AS PER DESIGN COMMENTS	SB		SC	
01	27.07.18	REVISED AS PER DESIGN COMMENTS	SB		SC	

CUSTOMER : TELANGANA STATE POWER GENERATION CORPORATION LTD.

CUSTOMER'S CONSULTANT : DESEIN PRIVATE LIMITED

PROJECT : 4 x 270 MW BHADRADRI TPS AT MANUGURU, KHAMMAM DISTRICT, TELANGANA

BHARAT HEAVY ELECTRICALS LTD.
POWER SECTOR
PROJECT ENGINEERING MANAGEMENT
NOIDA, (UP)

TITLE : DATA SHEET AND GA DRAWING FOR AIR TERMINALS LIKE GRILLS / DIFFUSERS / DAMPERS/ ETC

Drg No. PE-V0-411-553-A220

SCALE – NTS. SHEET 4 of 4 REV. 02

DRAWING No. PE-V0-411-553-A501

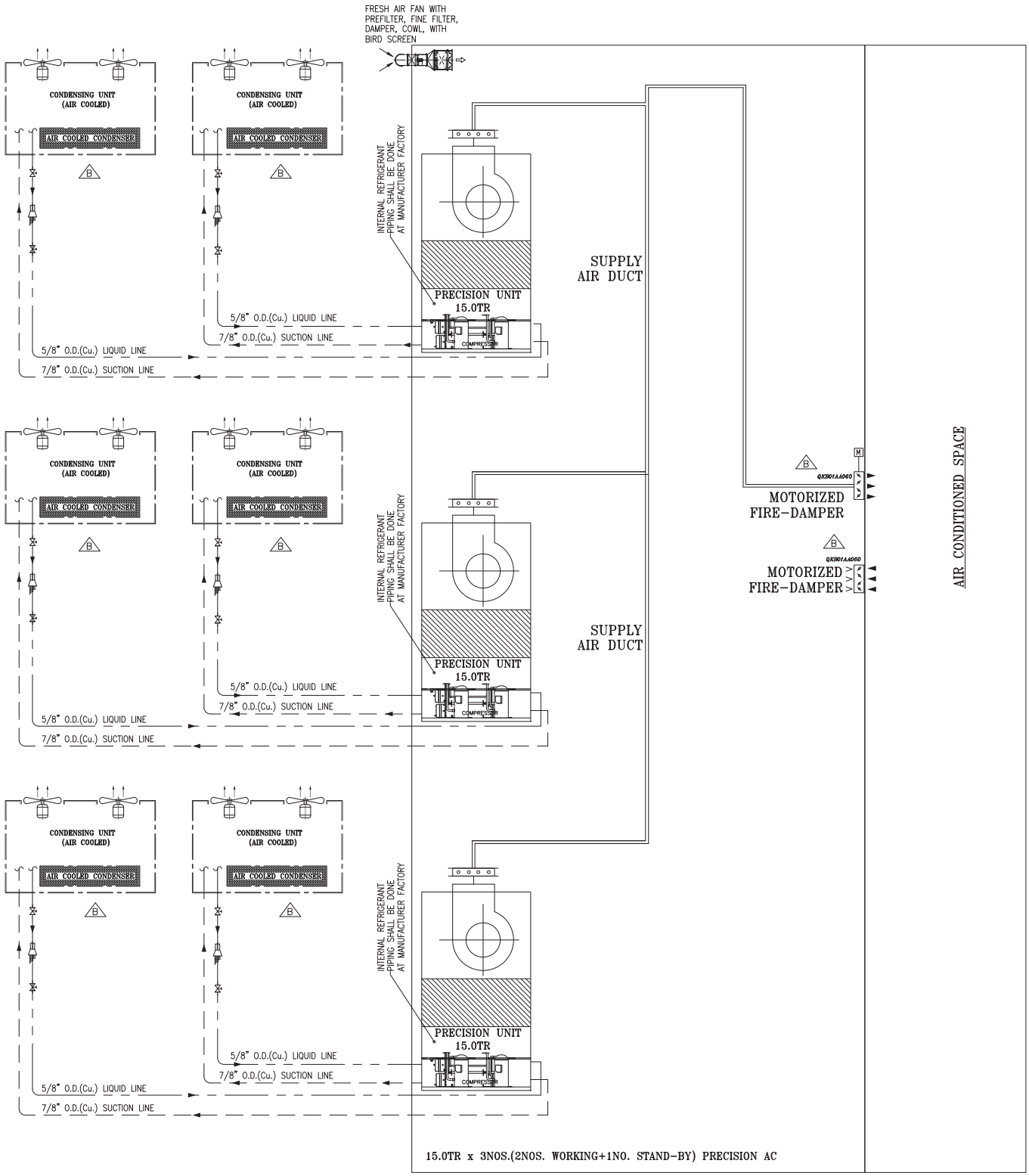

SCHEMATIC FOR AIR COOLED PRECISION AIR CONDITIONERS FOR ESP BUILDING 1&2 (3Nos. 2W+1S)

LEGEND:

- BALL VALVE
- CATCH ALL DRIER
- THERMOSTATIC BULB
- EXPANSION VALVE
- HOT GAS SUCTION LINE.
- LIQUID LINE

EQUIPMENT DETAILS

ACQUITTAL CAPACITY	QTY.	NOMINAL CAPACITY
15 TR	3 NOS.	18 TR

NOTES:-

1) SUCTION LINE AND LIQUID LINE SHALL BE COPPER PIPE AS PER SPECS.
2) DRAIN LINE TO BE PROVIDED UPTO NEAREST DRAIN POINT WITHIN PAC ROOM.

REV NO.	DATE	REMARKS	DRAWN NAME	DRAWN SIGN	CHECKED NAME	CHECKED SIGN
B	17.09.18	REVISED AS PER DESEIN COMMENTS	S.B		SC	
A	04.12.17	FIRST SUBMISSION	RNP		SC	

CUSTOMER : TELANGANA STATE POWER GENERATION CORPORATION LTD.

CUSTOMER'S CONSULTANT : DESEIN PRIVATE LIMITED

PROJECT : 4 x 270 MW BHADRADRI TPS AT MANUGURU, KHAMMAM DISTRICT, TELANGANA

BHARAT HEAVY ELECTRICALS LTD. POWER SECTOR PROJECT ENGINEERING MANAGEMENT NOIDA, (UP)

TITLE : P&I DIAGRAM FOR AC SYSTEM AC PLANT - 7 ESP 1 & 2

Drg No. PE-V0-411-553-A501 | SCALE - NTS | SHEET 7 OF 7 | REV. B

DRAWING NO. PE-V0-411-553-A509

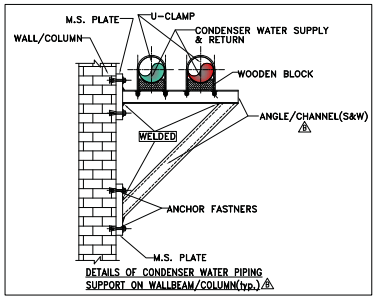

DETAILS OF CONDENSER WATER PIPING SUPPORT ON WALLBEAM/COLUMN(typ.)

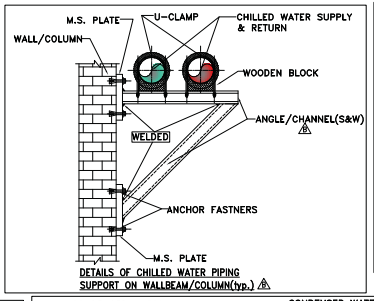

DETAILS OF CHILLED WATER PIPING SUPPORT ON WALLBEAM/COLUMN(typ.)

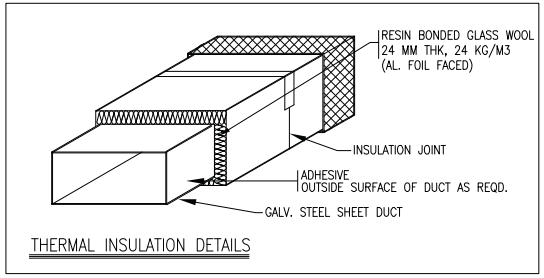

THERMAL INSULATION DETAILS

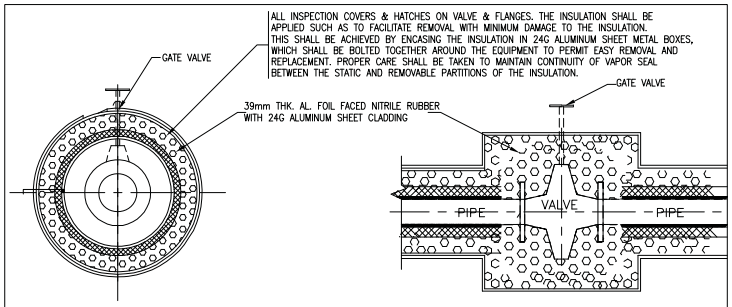

DETAIL OF VALVE INSULATION FOR CHILLED WATER LINE VALVES ONLY (THE DETAILS SHOWN IS FOR GATE VALVE, THE SAME TO BE APPLIED FOR OTHER TYPES OF VALVES

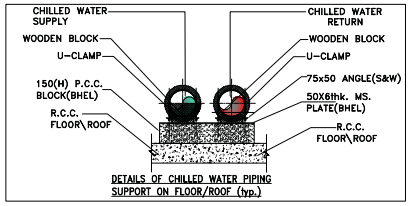

DETAILS OF CHILLED WATER PIPING SUPPORT ON FLOOR/ROOF (typ.)

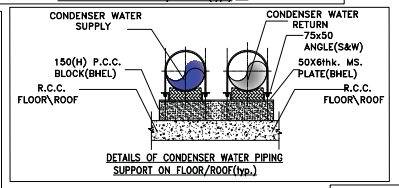

DETAILS OF CONDENSER WATER PIPING SUPPORT ON FLOOR/ROOF(typ.)

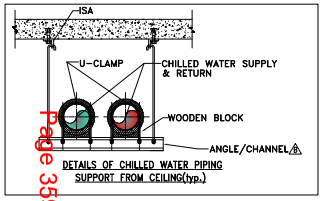

DETAILS OF CHILLED WATER PIPING SUPPORT FROM CEILING(typ.)

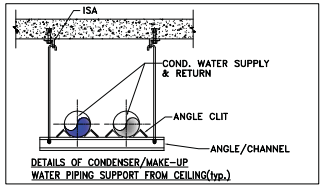

DETAILS OF CONDENSER/MAKE-UP WATER PIPING SUPPORT FROM CEILING(typ.)

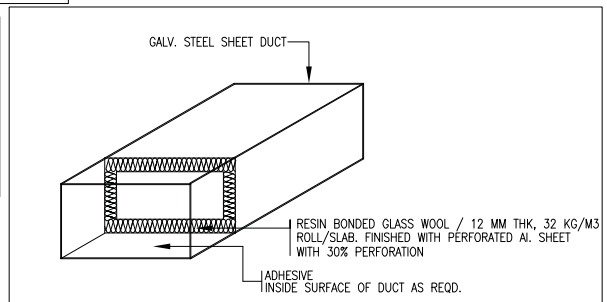

ACOUSTIC INSULATION DETAILS

INSULATION DETAILS

SL. No.	APPLICATION	INSULATION MATERIAL	THICKNESS
01.	CHILLED WATER PIPING (INSIDE)	AL. FOIL FACED NITRILE ROLL/SLAB. FINISHED WITH 24G. AL. SHEET FOR CLADDING	39mm.
02.	CHILLED WATER PIPING (OUTSIDE)	1F QUALITY EXPANDED POLYSTRENE AND FINISHED WITH CHICKENWIRE MESH & 12MM. TH. SAND CEMENT PLASTER AN OVERALL CLADDING OF 24G. AL. SHEET	50mm.
03.	DRAIN PIPE	AL. FOIL FACED NITRILE ROLL/SLAB. FINISHED WITH 24G. AL. SHEET FOR CLADDING	13MM. (AHU)/ 6MM. (FOR FCU & SPLIT UNITS).
04.	VALVES & PUMPS	AL. FOIL FACED NITRILE ROLL/SLAB. FINISHED WITH 24G. AL. SHEET FOR CLADDING	39mm.

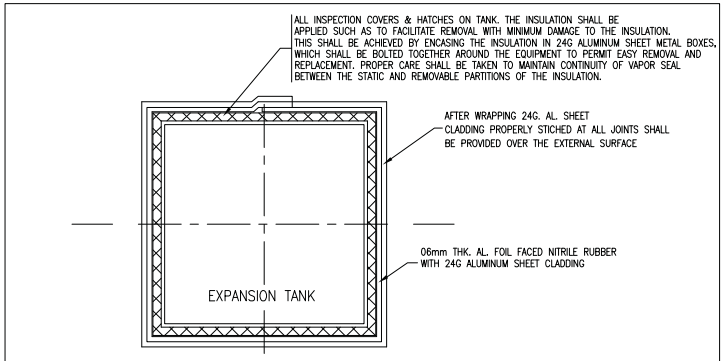

DETAIL OF MS OPEN TYPE EXPANSION TANK INSULATION

INSULATION & CLADDING TO BE DONE IN SUCH A WAY SO THAT MANHOLE COVER CAN BE OPENED AT ANY POINT OF TIME

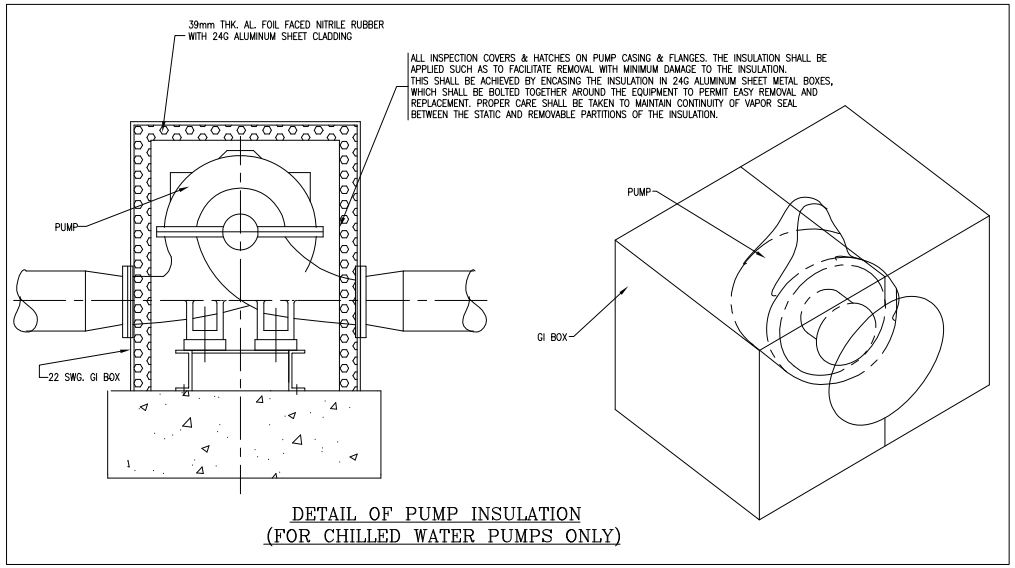

DETAIL OF PUMP INSULATION (FOR CHILLED WATER PUMPS ONLY)

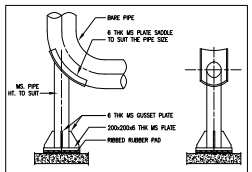

TYPICAL FLOOR SUPPORT FOR VERTICAL PIPES

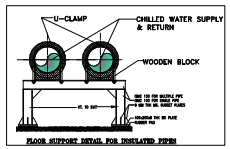

FLOOR SUPPORT DETAIL FOR INSULATED PIPES

TABLE OF PIPE SUPPORT

PIPE SIZE (NB)	SIZE OF RODS/ CHANNEL	SIZE OF HORIZONTAL ANGLE/CHANNEL	DISTANCE BETWEEN SUPPORT
25mm	10#	40x40x5	2.0M
30-80mm	10#	50x50x5	2.5M
100-250mm	ISMC 100	ISMC 100	3.0M
350	ISMC 150	ISMC 150	3.0M

NOTES :-

1. PRIMARY SUPPORT FOR EXTERNAL PIPES TO BE PROVIDED BY BHEL.

REV NO.	DATE	REMARKS	DRAWN NAME	DRAWN SIGN	CHECKED NAME	CHECKED SIGN
A	09.06.18	FIRST SUBMISSION	RNP		SC	

TYPICAL Details, DUCT. FABRICATION, SUPPORT AND ERECTION,, INSULATION: DUCTING, PIPING, EQUIPMENTS AND ACOUSTIC LINING,, PIPING: FABRICATION, SUPPORT AND ERECTION

CUSTOMER : TELANGANA STATE POWER GENERATION CORPORATION LTD.

CUSTOMER'S CONSULTANT : DESEIN PRIVATE LIMITED

PROJECT : 4 x 270 MW BHADRADRI TPS AT MANUGURU, KHAMMAM DISTRICT, TELANGANA

BHARAT HEAVY ELECTRICALS LTD. POWER SECTOR PROJECT ENGINEERING MANAGEMENT NOIDA, (UP)

Drg NO. PE-V0-411-553-A509 | SCALE - NTS. | SHEET 2 OF 3 | REV. 00

DRAWING NO. PE-VO-411-553-A509

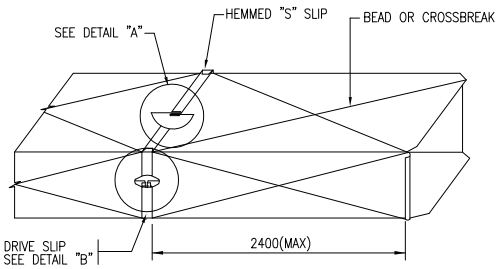

DUCT HEMMED "S" SLIP (0~750)

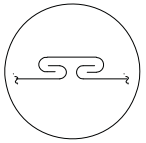

DETAIL "A" FOR
HORIZENTAL "S" SLIP JOINT

DETAIL "A"

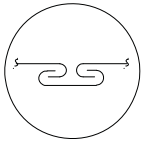

DETAIL "B" FOR
VERTICAL "S" SLIP JOINT

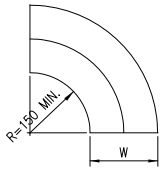

STANDARD RADIUS ELBOW

GROOVED SEAM
DETAIL – C

DETAIL – C

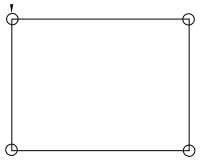

DUCT SEAM

RECTANGULAR DUCT CONSTRUCTION AS PER IS-655

Largest side of duct (in mm)	THK. OF SHEET	TYPE OF TRANSVERSE JOINT	BRACING
UPTO 300 mm.	24 G	25MM POCKET/S-SLIP ON 2.5 M CENTRES	CROSS-BREAK
UPTO 600 mm.	24 G	S-DRIVE, POCKET OR BAR SLIPS OR FLANGED JOINTS ON 2.5M CENTRES	NONE
601mm. to 750 mm.	24 G	S-DRIVE,25mm POCKET OR 25mm BAR SLIPS OR FLANGED JOINTS ON 2.5M CENTRES	25x25x3mm MS Angle
751 mm. to 1000 mm.	22 G	S-DRIVE,25mm POCKET OR 25mm BAR SLIPS OR FLANGED JOINTS ON 2.5M CENTRES	25x25x3mm MS Angle
1001 mm. to 1500 mm.	22 G	40x40x3mm MS ANGLE FLG. OR ,40mm POCKET OR 40mm BAR SLIPS WITH 35X3mm BAR REINFORCING ON 2.5M CENTRES	40x40x3mm MS Angle
1501 mm. to 2250 mm.	20 G	40x40x3mm MS ANGLE FLG. OR ,40mm POCKET OR 40mm BAR SLIPS WITH 35X3mm BAR REINFORCING ON 1 M CENTRES	40x40x3mm MS Angle (60 cm from joint)
2251 mm. & above	18 G	50x50x3mm MS ANGLE FLG. OR ,40mm POCKET OR 40mm BAR SLIPS WITH 35X3mm BAR REINFORCING ON 1 M CENTRES	50x50x3mm MS Angle (60 cm from joint)

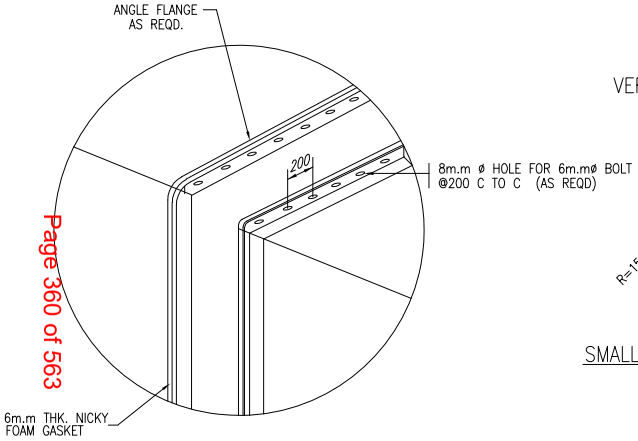

DETAIL "D"

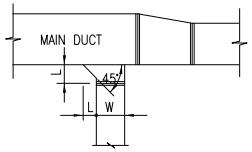

L = W/4 OR 100mm MIN.

90° BRANCH CONNECTION

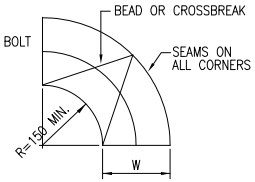

SMALL ELBOW CONSTRUCTION

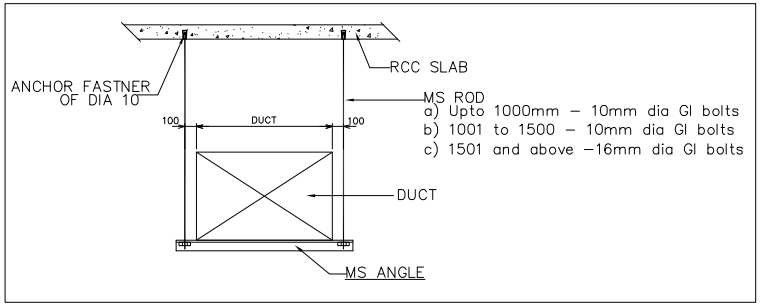

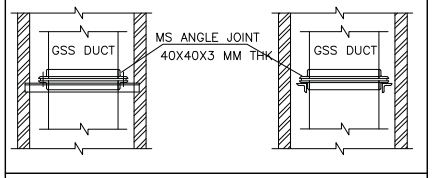

THE TYPE OF TRANSVERSE JOINTS SHALL BE FOLLOWS:

LARGE SIDE MM	TYPE OF TRANSVERSE JOINTS
UP TO 600 :	25MM WIDE POCKET, DRIVE OR S SLIP
600 TO 1000 :	85MM WIDE, BAR S SLIP OR POCKET SLIP
1001 TO 2250 :	40MMX40MMX6MM M.S. ANGLE CONNECTION

TYPICAL VERTICAL DUCT SUPPORT DETAILS

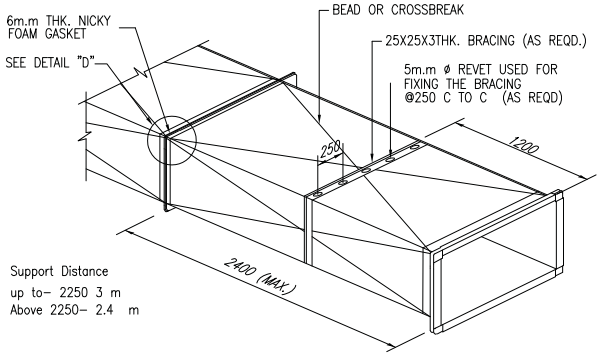

FLANGE JOINT DUCT CONNECTION

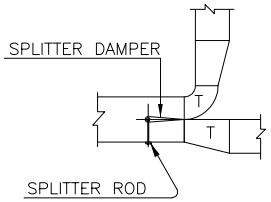

SPLITTER DAMPER DETAILS

NOTES :–

1. PRIMARY SUPPORT FOR EXTERNAL PIPES TO BE PROVIDED BY BHEL.

CUSTOMER :	TELANGANA STATE POWER GENERATION CORPORATION LTD.
CUSTOMER'S CONSULTANT	DESEIN PRIVATE LIMITED
PROJECT :	4 x 270 MW BHADRADRI TPS AT MANUGURU, KHAMMAM DISTRICT, TELANGANA
	BHARAT HEAVY ELECTRICALS LTD. POWER SECTOR PROJECT ENGINEERING MANAGEMENT

REV NO.	DATE	REMARKS	DRAWN NAME	DRAWN SIGN	CHECKED NAME	CHECKED SIGN
A	09.06.18	FIRST SUBMISSION	RNP		SC	

TITLE : TYPICAL DETAILS, DUCT FABRICATION, SUPPORT AND ERECTION,, INSULATION; DUCTING, PIPING, EQUIPMENTS AND ACOUSTIC LINING, PIPING FABRICATION, SUPPORT AND ERECTION

Drg NO. PE-VO-411-553-A509

SCALE – NTS. SHEET 3 OF 3 REV. 00

DRAWING No. PE-VO-411-554-A401

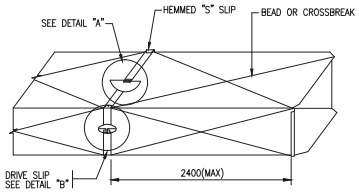

DUCT HEMMED "S" SLIP (0~750)

DETAIL "A" FOR HORIZENTAL "S" SLIP JOINT

DETAIL "A"

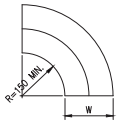

STANDARD RADIUS ELBOW

GROOVED SEAM DETAIL – C

DETAIL – C

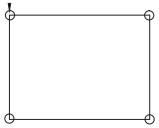

0 ~ 2250

DUCT SEAM

DETAIL "B" FOR VERTICAL "S" SLIP JOINT

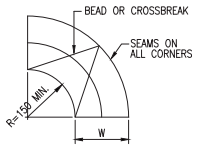

SMALL ELBOW CONSTRUCTION

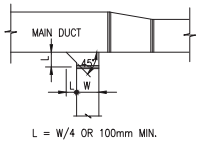

90° BRANCH CONNECTION

RECTANGULAR DUCT CONSTRUCTION AS PER IS-655

Largest side of duct (in mm)	THK. OF SHEET	TYPE OF TRANSVERSE JOINT	BRACING
UPTO 300 mm.	24 G	25MM POCKET/S-SLIP ON 2.5 M CENTRES	CROSS-BREAK
UPTO 600 mm.	24 G	S-DRIVE, POCKET OR BAR SLIPS OR FLANGED JOINTS ON 2.5M CENTRES	NONE
601mm. to 750 mm.	24 G	S-DRIVE,25mm POCKET OR 25mm BAR SLIPS OR FLANGED JOINTS ON 2.5M CENTRES	25x25x3mm MS Angle
751 mm. to 1000 mm.	22 G	S-DRIVE,25mm POCKET OR 25mm BAR SLIPS OR FLANGED JOINTS ON 2.5M CENTRES	25x25x3mm MS Angle
1001 mm. to 1500 mm.	22 G	40x40x3mm MS ANGLE FLG. OR ,40mm POCKET OR 40mm BAR SLIPS WITH 35X3mm BAR REINFORCING ON 2.5M CENTRES	40x40x3mm MS Angle
1501 mm. to 2250 mm.	20 G	40x40x3mm MS ANGLE FLG. OR ,40mm POCKET OR 40mm BAR SLIPS WITH 35X3mm BAR REINFORCING ON 1 M CENTRES	40x40x3mm MS Angle (60 cm from joint)
2251 mm. & above	18 G	50x50x3mm MS ANGLE FLG. OR ,40mm POCKET OR 40mm BAR SLIPS WITH 35X3mm BAR REINFORCING ON 1 M CENTRES	50x50x5mm MS Angle (60 cm from joint)

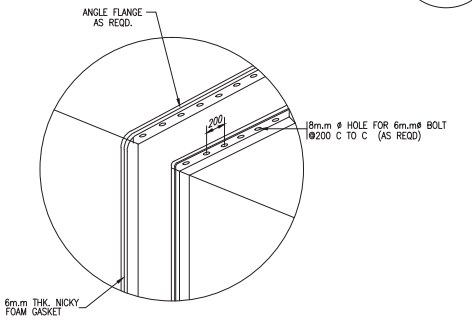

DETAIL "D"

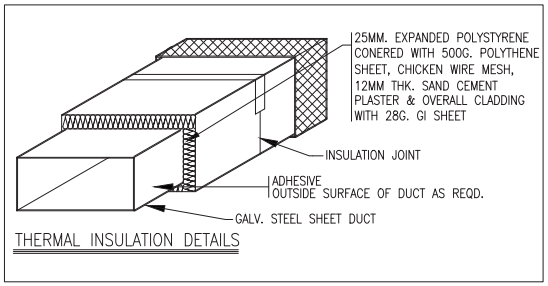

THERMAL INSULATION DETAILS

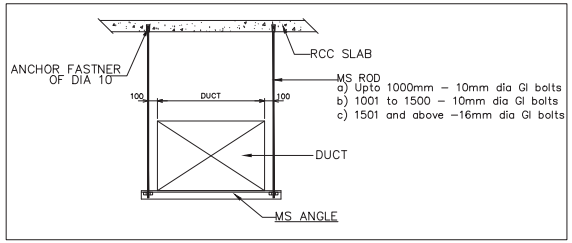

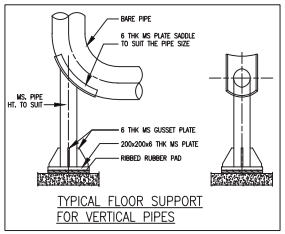

TYPICAL FLOOR SUPPORT FOR VERTICAL PIPES

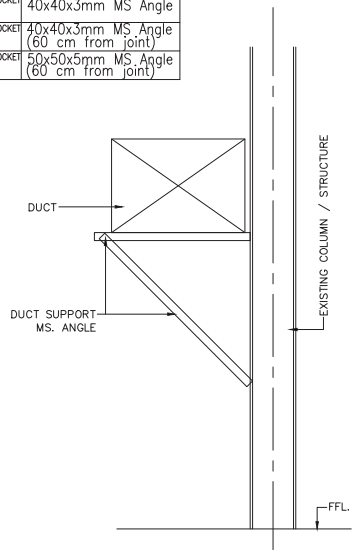

TYPICAL HORIZONTAL DUCT SUPPORT FROM EXISTING COLUMN / STRUCTURE

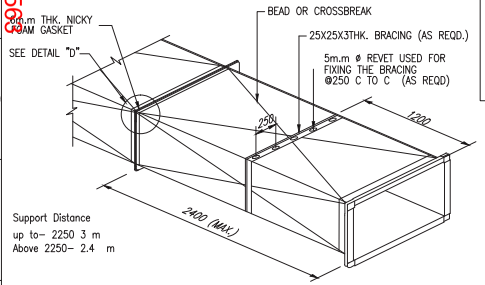

FLANGE JOINT DUCT CONNECTION

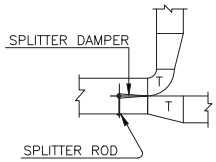

SPLITTER DAMPER DETAILS

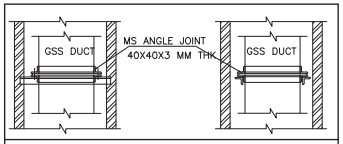

TYPICAL VERTICAL DUCT SUPPORT DETAILS

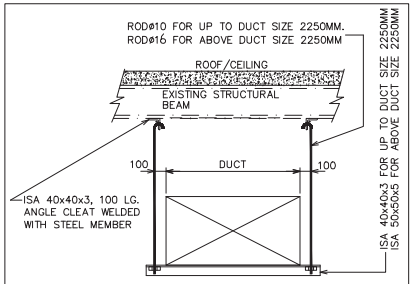

TYP. DETAIL OF DUCT SUPPORT TAKEN FROM EXISTING STEEL BEAM

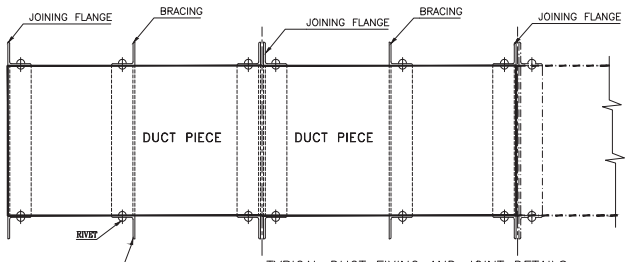

TYPICAL DUCT FIXING AND JOINT DETAILS

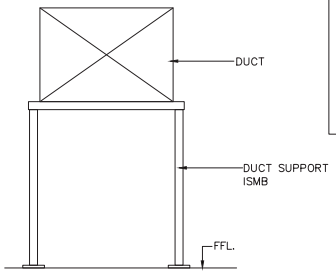

TYPICAL HORIZONTAL DUCT SUPPORT

CUSTOMER :	TELANGANA STATE POWER GENERATION CORPORATION LTD.
CUSTOMER'S CONSULTANT	DESEIN PRIVATE LIMITED
PROJECT :	4 x 270 MW BHADRADRI TPS AT MANUGURU, KHAMMAM DISTRICT, TELANGANA
	BHARAT HEAVY ELECTRICALS LTD. POWER SECTOR PROJECT ENGINEERING MANAGEMENT NOIDA (UP)

REV NO.	DATE	REMARKS	NAME	SIGN	NAME	SIGN
			DRAWN		CHECKED	

TITLE : TYPICAL Details, DUCT FABRICATION DRAWING / SUPPORT / ERECTION, INSULATION OF DUCTING / PIPING & EQUIPMENTS PIPE ERECTION

Drg No. PE-VO-411-554-A401 | SCALE – NTS. | SHEET 1 OF 1 | REV. 0

MANUFACTURING QUALITY PLAN	QAP No : PE-V0-411-554-A002	Project : (4X270 MW) BHADRADRI TPP
ITEM : AIR WASHER / UNITARY AIR FILTRATION UNIT MODEL : AS PER APPROVED DATA SHEET SUB SYSTEM : VENTILATION PACKAGE	Rev No : 00 Date : 01.02.18 Page : 1 of 1	Package : Ventilation System Contract No V/ 17/ 0187

Sl.no	Composition & Operation	Characteristics	Class	Type of check	Quantam of Check		Reference Document	Acceptance Nom	Form of Record	Agency				REMARKS
					M	C/N					M	C	N	
1	2	3	4	5	6		7	8	9	10				11
1	Raw material													
1.1	MS/ GP Sheet	Chemical Composition	Major	Manufacturer's TC verification	1 / Lot		Relevant material standard as per Approved Drawing & Data sheet		TC	V	V	V	V	
1.2	—DO—	Mechanical Test	Major	Bend Test	1 / Lot		Relevant material standard as per Approved Drawing & Data sheet		TC	V	V	V	V	
1.3	Eliminator/Air Distributor	Visual & Dimensional	Major	TC verification	1 / Lot		Approved Drawing & Data sheet		IR/TC	V	P	V	V	
1.4	Pipe for Header & Branch for spray set	Dimensional & Chemical Test	Major	Manufacturer's TC verification	1 / Lot		Relevant material standard as per Approved Drawing & Data sheet		IR/TC	V	V	V	V	
1.5	Nozzle	Visual	Minor	Visual	at random		Approved Drawing & Data sheet		IR/TC		P	V		
2	In-process Inspection													
2.1	Components of Air washer & UAF	Fabrication	Major	Dimensional	at random		Approved Drawing		IR	V	P	V	V	
2.2	Al.Extrusion	Length Cutting	Major	Dimensional	at random		Approved Drawing		IR	V	P	V	V	
2.3	Fabrication of Casing & Tank	Visual & Dimensional	Major	Visual and Measurement	100%	10%	Approved Drawing		IR	V	P	W	V	
2.4	Surface Finish / Appearance	Surface Defect	Major	DPT on weld	10% Random	10% Random	Relevant indication		IR	V	P	W	V	
3	Final Inspection													
3.1	Water fill test of Tank	Leakage Test	Major	Water fill	100%	One/ Model	No Leakage in 1/2 Hour		IR	V	P	W	V	
3.2	Assembly	Orientation and fitment of various parts	Major	Visual and Measurement	One/ Model		Apvd.Drwg/ Data Sht		IR	V	P	W	V	
3.3	Painting	Aesthetic	Major	Visual	100%	Random	Apvd.Drwg/ Data Sht		IR	V	P	W	V	
3.4	Review of QA documents						Apvd.QAP				V	V	V	
Manufacturer/ Subsuppliear		Main Supplier	LEGEND : RECOVER,IDENTIFIED WITH ESSENCIAL INCLUDED BY SUPPLIER DOCUMENTATION											

M : MANUFACTURER / SUB VENDOR
C : MAIN SUPPLIER ,
N : BHEL
P : PERFORM
W : WITNESS
V : VERIFICATION OF TC AS APPROPRIAT

Bharat Heavy Electricals Limited PPEI Sector-16A NOIDA 201301 PCM/Mech. Aux.

DOCUMENT NO : PE-V0-411-554-A002
REV. 0
CAT

REVIEWED APPROVED BY APPROVAL SEAL

Comp at Ladpss-VII
EDITPC

WPIL Limited A5, Sector 22, Meerut Road, Ghaziabad. 201003, U.P. India	MANUFACTURING QUALITY PLAN FOR **HORIZONTAL PUMP**				QAP No.	PE-V0-411-554-A003		Customer	Telengana State Power Generation Corporation Ltd./ BHEL △		
					Rev. No.	0	Date 09.11.17	Supplier			
	Job No.	V/17/0187			Pump Model	WP 100/320		Sub Supplier	WPIL (Hydrotech Engineers) △		

SL. NO.	COMPONENT & OPERATION	CHARATERISTICS	CLASS	TYPE OF CHECK	QUATUM OF CHECK	REFERENCE DOCUMENT	ACCEPTANCE NORMS	FORMAT OF RECORD	AGENCY M	AGENCY C	AGENCY O	REMARKS
1	2	3	4	5	6	7	8	9	10			11
1.0	**Raw Material**											
1.1	Pump Casing, Impellers, Stuffing Box, Pump case cover	Mechanical & Chemical Properties	Critical	Mechanical & Chemical	1/Heat	Apprd. Data Sheet/ Appd Drg.	Relevant Material spec.	MTC	P	V	V	In case correlated TC are not available then check testing shall be done
		Visual	Critical	Visual	100 %	MSS-SP 55		IR	P	-	-	
1.2	Shafts, Shaft Sleeves, Couplings & Wear Rings	Mechanical & Chemical	Critical	Mechanical & Chemical check	1 Sample per Batch	Apprd. Data Sheet/ Appd Drg.	Relevant Material spec.	MTC	P	V	V	In case correlated TC are not available then check testing shall be done
		Ultrasonic Test of Shaft (Sub Surface Defect)	Critical	UT check of Shaft >50mm dia	100 %	ASTM A388	IP 002	UT Report	P	-	-	
1.3	Shaft Sleeves, Couplings & Wear Rings	Mechanical & Chemical	Critical	Mechanical & Chemical check	1 Sample per Batch	Apprd. Data Sheet/ Appd Drg.	Relevant Material spec.	Compliance certificate	P	V	V	
2.0	**In process inspection**											
2.1	Various Components mentioned in 1.1, 1.2	Dimensions	Major	Measurement	100 %	WPIL Drg.	WPIL Drg.	IR	P	-	-	
2.2	Impeller	Cleaning, Deburring, Surface Finish & Workmanship	Major	Visual	100%	WPIL Drg.	WPIL Drg.	IR	P	-	-	
		Dynamic Balancing	Critical	Balancing	100%	ISO 1940	ISO 1940 Gr 6.3	Balancing Report	P	V	V	See note 2
		LPI on machined surface △	Major	DPT	100%	WPIL Test Procedure No. IP:QC/09		NDT Certificate	P	V	V	DPT shall be carried out on machined areas

LEGEND:
M: MANUFACTURER/SUB CONTRACTOR
C: CONTRACTOR/-S&W
O: OWNER/ CONSULTANT- BHEL
P: PERFORM
V: VERIFICATION OF REPORTS
W: WITNESS
IR : INTERNAL RECORD
MTC : MANUFACTURER TEST CERTIFICATE

MANUFACTURER SEAL AND SIGN

NAME & SIGN OF APPROVING AUTHORITY & SEAL

12/07
Camp at KTPS-VII
ED/TPC

Format no.

WPIL Limited A5, Sector 22, Meerut Road, Ghaziabad. 201003, U.P. India	MANUFACTURING QUALITY PLAN FOR **HORIZONTAL PUMP**				QAP No.	PE-V0-411-554-A003		Customer	Telengana State Power Generation Corporation Ltd./ BHEL △		
					Rev. No.	0	Date 09.11.17	Supplier			
	Job No.	V/17/0187			Pump Model	WP 100/320		Sub Supplier	WPIL (Hydrotech Engineers) △		

SL. NO.	COMPONENT & OPERATION	CHARATERISTICS	CLASS	TYPE OF CHECK	QUATUM OF CHECK	REFERENCE DOCUMENT	ACCEPTANCE NORMS	FORMAT OF RECORD	AGENCY M	AGENCY C	AGENCY O	REMARKS
1	2	3	4	5	6	7	8	9	10			11
2.3	Shaft △	LPI on machined surface	Major	DPT	100%	WPIL Test Procedure No. IP:QC/09		NDT Certificate	P	V	V	DPT shall be carried out on machined areas
2.4	Hydro Test of Pressure Parts	Leak Tightness	Critical	Testing	100%	WPIL test procedure	No Leakage	Hydro test report	P	V	V	Test at 1.5XShut Off, Duration -30min
3.0	**Final Inspection**											
3.1	Performance Test of complete pump with shop motor	Q Vs H, Q Vs N, Q Vs P, Noise, Vibration,	Critical	Performance Test	1 PER TYPE	WPIL Test Procedure	*IP 011 & ISO 9906 Gr. 2B*	Performance Test Report	P	W	V	See note 4
3.2	Overall Dimension	Measurement	Major	Dimensions	1 PER TYPE	Apprvd Drwg	Apprvd GA Drwg	Dim. Report	P	W	V	
3.3	Strip Test after Performance Test in case of abnormal sound	Strip to check wear & tear	Critical	Visual	100 %	No undue wear & tear	No undue wear & tear	Strip test report	P	W	V	See note 3
3.4	Complete Pump	Record checking & review of QA Documents	Major	Records	100%	Test Certificates Of Earlier Tests	Apprvd Drwg / Data Sheet	Final QA Documentation	P	W	V	
3.5	Complete Pump & Accessories	Painting	Major	Visual	100%	As per WPIL Procedure	Procedure no. WI 9.2.138.	–	P	-	-	
		Packaging	Major	Visual	100%	As per WPIL Procedure	*Procedure no. IP 025*	Packing Slip	P	-	-	

NOTES:
1. This QAP is also applicable for spares if ordered.
2. Dynamic Balancing of Impeller—Single Plane Balancing in case of D/B>6 & Two Plane Balancing in case of D/B<6 where D is Impeller OD & B is Impeller Volute width

LEGEND:	MANUFACTURER SEAL AND SIGN	NAME & SIGN OF APPROVING AUTHORITY & SEAL
M: MANUFACTURER/SUB CONTRACTOR C: CONTRACTOR/ -S&W O: OWNER/ CONSULTANT- BHEL P: PERFORM V: VERIFICATION OF REPORTS W: WITNESS IR : INTERNAL RECORD MTC : MANUFACTURER TEST CERTIFICATE		12/07 Camp at KTPS-VII Format no.

WPIL Limited A5, Sector 22, Meerut Road, Ghaziabad. 201003, U.P. India	MANUFACTURING QUALITY PLAN FOR **HORIZONTAL PUMP**				QAP No.		PE-V0-411-554-A003		Customer	Telengana State Power Generation Corporation Ltd./ BHEL
					Rev. No.	0	Date	09.11.16	Supplier	
	Job No.		V/17/0187		Pump Model		WP 100/320		Sub Supplier	WPIL (Hydrotech Engineers)

SL. NO.	COMPONENT & OPERATION	CHARATERISTICS	CLASS	TYPE OF CHECK	QUATUM OF CHECK	REFERENCE DOCUMENT	ACCEPTANCE NORMS	FORMAT OF RECORD	AGENCY			REMARKS
									M	C	O	
1	2	3	4	5	6	7	8	9	10			11

3. Vibration & Noise level shall be recorded during shop test but shall not form acceptance criteria; however, values as per specification are guaranteed at site.
4. WPIL to test all Pumps and one Pump per type, selected randomly shall be offered for witness with Lab Motor. Pumps up to 15 KW rating shall not be offered for witness and only WPIL internal test report shall be presented for review.
5. Documents marked as IR shall not be part of final QA Documentation.
6. For Mono Block Pump only TC will be reviewed.

LEGEND:	MANUFACTURER SEAL AND SIGN	NAME & SIGN OF APPROVING AUTHORITY & SEAL
M: MANUFACTURER/SUB CONTRACTOR C: CONTRACTOR/ -S&W O: OWNER/ CONSULTANT- BHEL P: PERFORM V: VERIFICATION OF REPORTS W: WITNESS IR : INTERNAL RECORD MTC : MANUFACTURER TEST CERTIFICATE		17/03 Camp at Kopsr-VI Format no. GD/TPC

marathon electric	MANUFACTURE'S NAME & ADDRESS MARATHON ELECTRIC MOTORS (INDIA) LTD. 58, Taratolla Road Kolkata - 700024	MANUFACTURING QUALITY PLAN ITEM : C E N T R I F U G A L F A N SUBSYSTEM :	QP NO. : CFF/069 REV : 0 DATE : 01.02.18 PAGE 1 OF 2	PROJECT : (4X270 MW) BHADRADRI THERMAL POWER PROJECT CUSTOMER : TSGENCO CONSULTANT : DESEIN PVT.LTD MAINCONTRACTOR : BHEL SUB-CONTRACTOR

SL. NO.	COMPONENT & OPERATIONS	CHARACTERISTIC	CLASS	TYPE OF CHECK	QUANTUM OF CHECK (By Performer)	REFERENCE DOCUMENT	ACCEPTANCE NORMS	FORMAT RECORDS	D	AGENCY M	AGENCY C	AGENCY O	REMARKS
1	2	3	4	5	6	7	8	9		10			11
	RAW MATERIAL												
1	Sheet & plate (Casing & Impeller)	Chemical & Mechanical test, Surface Visual	Major	Chemical Mechanical	Sample per Lot --do--	IS : 1079,gr: '0' up to 3.15 mm IS:2062,gr: 'A' 4 mm & above	As per colum 7	TC	√	P	V	V	Material Testing is carried out periodically by MARATHON authorised testing lab and test report is kept.
2	SHAFT BAR	Chemical analys's Mechanical test, Surface Visual	Major	Chemical Mechanical	Sample per Lot	En-8,BS:970 / IS:1570-C45 --do--	En-8,BS:970 / IS:1570-C45 --do--	TC	√	P	V	V	
3	SHAFT BAR (Above 50 mm dia)	INTERNAL DEFECTS	Major	ULTRASONIC TEST	100%	ASTM A388, BACKWALL ECHO 75% FLAW ECHO 75% REDUCTION OF BACKWALL ECHO 20%(MAX.)	As column 7	Lab. Report	√	P	V	V	
II	IN - PROCESS INSPECTION :												
1	Fabricated Casing & Impeller	Weld & Surface Defect	Major	DPT	100%	ASTME - 165	No Relevant Indication	T.C.	√	P	V	V	
2	Shaft & impeller Assembly	Balancing - Dynamic	Major	Balancing	100%	ISO.1940, Gr.6.3	Col.7	T.C	√	P	V	V	
3	MOTOR	Routine Test	Major	Routine Test	100%	IS:325/Catalouge/Approved Data Sheet	Col.7	T.C	√	P	V	V	Internal TC of Motor will be Submitted to Customer for Verification

MANUFACTURER/ SUB CONTRACTOR	CONTRACTOR	LEGE D : Records identified with "Tick" shall be essentially included by contractor in QA documentation. M : Manufacturer C : O : BHEL P : Perform W : Witness V : Verification	FOR CUSTOMER USE	DOC. NO. : PE-V0-411-554-A004,REV-0
Marathon Electric Motors (India) Limited Paharpur Works 58, Taratala Road Kolkata-700024(INDIA)	SIGNATURE		PEVIEWED BY	NAME & SIGN OF APPROVING AUTHORITY AND SEAL

17/05
Camp at Kotpa-VII
ED/TPC

Marathon Electric Motors (India) Limited Paharpur Works 58, Taratala Road Kolkata-700024(INDIA)

Bharat Heavy Electricals Limited PPEI Sector-16A NOIDA 201 301 ECHMech. Aux.

	MANUFACTURE'S NAME & ADDRESS	MANUFACTURING QUALITY PLAN		
marathon electric	MARATHON ELECTRIC MOTORS (INDIA) LTD 58, Taratolla Road Kolkata - 700024	ITEM : CENTRIFUGAL FAN SUBSYSTEM :	QP NO. : CFF/069 REV : 0 DATE : 18.12.17 PAGE 2 OF 2	PROJECT : 4X270 MW) BHADRADRI THERMAL POWER PROJECT CUSTOMER : TSGENCO CONSULTANT : DESEIN PVT.LTD MAIN CONTRACTOR : BHEL SUB-CONTRACTOR

SL. NO.	COMPONENT & OPERATIONS	CHARACTERISTIC	CLASS	TYPE OF CHECK	QUANTUM OF CHECK (By Performer)	REFERENCE DOCUMENT	ACCEPTANCE NORMS	FORMAT RECORDS	D	AGENCY M	AGENCY C	AGENCY O	REMARKS
1	2	3	4	5	6	7	8	9		10			11
	FINAL INSPECTION												
1	ASSEMBLY	Overall Dimensions	Minor	Measurement	100%	Appd. GA Drawing	as per Col '7'	Insp. Report	√	P	V	V	One of Each Type & Size
2	PREFORMANCE of Fan With Shop Motors	Air delivery Static pressure Power cosumption, Speed Efficiency Noise & Vibration Level	Critical	Measurement by instrument.	One of each size & type	IS:4894 / AMCA-210 / G.A.DRG. & APPD. DATA SHEET Tolerance on AMCA-210 As Per IS:4894 Tolerance on IS:4894 As Per IS:4894	as per Col '7'	P.T. Report	√	P	w	w	Internal Performance test Certificate will be Submitted Only for Fans having Capacity below : 20,000 M3/hr to the Customer / Contractor for Verification
3	Routine test With Shop Motors	a)Fan to run for average 30 minutes without break or till stabilisation of temp. rise of brg whichever is earlier to check for vibration, speed & Power.	Critical	Visual Measurement	One of each Size & Type	Approved G.A.DRG. & Appvd. DATA SHEET IS:14817(Part-1)Class-IV,Level-B	Col.7	T.C.	√	P	w	w	One of each type & size shall be witnessed by BHEL representative and balance TC shall be submitted for verification.
4	Painting	Surface Finish, Shade	Minor	Visual	100%	APPD. GA.DRG.	Col.7	I.R.	√	P	V	V	
	NOTE :	1) All material shall be as per appd drawing/data sheet 2) Noise & vibration measurment at shop for reference only.											

LEGE
D : Records identified with "Tick" shall be essentially included by contractor in QA documentation.
M : Manufacturer
C :
O : BHEL
P : Perform W : Witness V : Verification

MANUFACTURER/ SUB CONTRACTOR	CONTRACTOR	FOR CUSTOMER USE	DOC. NO. PE-V0-411-554-A004,REV-0
Marathon Electric Motors (India) Limited Paharpur Works 58, Taratala Road Kolkata-700024(INDIA)			12/03
SIGNATURE	SIGNATURE	PEVIEWED BY	NAME & SIGN OF APPROVING AUTHORITY AND SEAL

Camp at KTPS-VII

Marathon Electric Motors (India) Limited Paharpur Works 58, Taratala Road Kolkata-700024(INDIA)

cat - 3

marathon	MANUFACTURE'S NAME & ADDRESS	MANUFACTURING QUALITY PLAN	PROJECT :
	MARATHON ELECTRIC MOTORS (INDIA) LTD. 58, Taratolla Road Kolkata - 700024	ITEM : AXIAL / RE FAN / SPARK PROOF FAN QP. NO. : AFF/ 105 REV. : 0 SUB-SYSTEM : VENTILATION SYSTEM DATE : 18 / 11 / 2017 PAGE 1 OF 2	(4X270 MW) BHADRADRI THERMAL POWER PROJECT CUSTOMER : TSGENCO CONSULTANT: DESEIN SUB CONTRACTOR : MAIN CONTRACTOR: BHEL

SL. No	COMPONENT & OPERATION	CHARACTERISTICS	CLASS	TYPE OF CHECK	QUANTUM OF CHECK (By Performer)	REFERENCE DOCUMENT	ACCEPTANCE NORMS	FORMAT OF RECORD		AGENCY M	AGENCY C	AGENCY O	REMARKS
1	2	3	4	5	6	7	8	9		10			11
1.0		**RAW MATERIAL**											
1.1	Casing - M.S Sheets & Plates	Physical & Chemical	Major	Visual & Physical, Chemical test	Sample / Heat	Relevant material standard as per Appvd. Drg. / Data sheet		T.C.	✓	P	V	V	Manufacturer certificate / Material testing to be carried out from marathon authorised testing lab. & test reports are kept .
1.3	IMPELLER Blade & Hub (Al. alloy)	- Do -	Major	Visual & Physical, Chemical test	Sample/ Heat	Relevant material standard as per Appvd. Drg. / Data sheet		- Do -	✓	P	V	V	----- DO ----
2.0		**IN PROCESS INSPECTION**											
2.1	Casing Fabication	DPT	Major	NDT	20%	ASTME - 165	No relevant Indication	Insp. Report	✓	P	V	V	For Butt Weld Only
2.2	IMPELLER - Balancing	Balancing :Dynamic	Critical	Dy. Balancing	100%	IS:11723 , Part I, Gr-6.3 or ISO:1940,Gr-6.3	IS:11723 , Part I, Gr-6.3 or ISO:1940,Gr-6.3	T.C.	✓	P	V	V	
2.3	MOTORS		Major	T.C.	100%	IS : 325 / Catalogue / Data sheet	Col. 7	TC	✓	V	V	V	Marathon Internal routine TC of Job Motor will be submitted to customer for verification .

MANUFACTURER / SUBCONTRACTOR	CONTRACTOR	LEGEND M : Manufacturer / Sub contractor C O : BHEL P : Perform W : Witness V : Verification	FOR CUSTOMER USE
SIGNATURE	SIGNATURE		REVIEWED BY

DOC NO. PE-V0-411-554-A005, R-0

17/05 camp at KTPS-VII

NAME & SIGN OF APPROVING AUTHORITY ED/TPC

Bharat Heavy Electricals Limited PPEI Sector-16A NOIDA-201 301 PCM/Mech. Aux.

Marathon Electric Motors (India) Limited Paharpur Works 58, Taratala Road Kolkata-700024(INDIA)

marathon®	MANUFACTURE'S NAME & ADDRESS MARATHON ELECTRIC MOTORS (INDIA) LTD. 58, Taratolla Road Kolkata - 700024	MANUFACTURING QUALITY PLAN ITEM : AXIAL / RE FAN / SPARK PROOF FAN SUB-SYSTEM : VENTILATION SYSTEM	QP. NO. : AFF/ 105 REV. : 0 DATE : 18/11/17 PAGE 2 OF 2	PROJECT : (4X270 MW) BHADRADRI THERMAL POWER PROJECT CUSTOMER : TSGENCO CONSULTANT: DESEIN CONTRACTOR : MAIN CONTRACTOR: BHEL

SL. No	COMPONENT & OPERATION	CHARACTERISTICS	CLASS	TYPE OF CHECK	QUANTUM OF CHECK (By Performer)	REFERENCE DOCUMENT	ACCEPTANCE NORMS	FORMAT OF RECORD		AGENCY M	C	O	REMARKS
1	2	3	4	5	6	7	8	9		10			11
3.0	**FINAL INSPECTION**												
3.1	Overall dimension of Fan assembly	Visual & measurement	Minor	Measurement	100%	Appd. G.A. Drg.	As per colum 7	Insp. Report	✓	P	V	V	One of each size
3.2	RUNNING TEST	A) Fan to run for 4Hrs. without break or till stabilisation of Temp. rise of Motor Whichever is earlier to check , vibration	Critical	a) Speed b) Vibration d) Noise e) Temp. Rise	100%	As per approved Data sheet, IS:14817(Part 1),Class-IV,Level-B Approved G.A.Drawing Approved Data Sheet	As per approved Data sheet, IS:14817(Part 1),Class-IV,Level-B Approved G.A.Drawing Approved Data Sheet	Run Test Report	✓	P	W	V	Routine Test witness to be carried out for fans of one of each type & size by S&W above 5.5 KW
3.3	PERFORMANCE TEST	Measurement	Critical	Measurement a) Flow b) Pressure c) Speed d) Power consumption e) Efficiency	one of each type & size	As per approved Data sheet,IS:3588 & Approved G.A.Drawing	As per approved Data sheet,IS:3588 & Approved G.A.Drawing	PT report		P	W	V	S&W shall witness run test & performance test of Axial Flow fans of 5.5 KW & above motor rating power required For less than 5.5KW motor rating fan manufacturer test report shall be reviewed . Tolerance shall be as per Appvd . Datasheet Power consumption shall be carried out by 2 wattmeter / power analyser
3.4	Painting	Surface Finish & Shade	Minor	Visual	100%	APPD. G.A. Drg.	Col. 7		✓	P	V	V	

MANUFACTURER / SUB CONTRACTOR	CONTRACTOR	LEGEN M : Manufacturer / Sub contractor C : O : BHEL P : Perform W : Witness V : Verification	FOR CUSTOMER USE	DOC NO. PE-V0-411-554-A005, R-0
SIGNATURE	SIGNATURE		REVIEWED BY	NAME & SIGN OF APPROVING AUTHORITY

17/05 camp at KTPS-I
ED/TPC

Bharat Heavy Electricals Limited PPEI Sector-16A NOIDA 201 301 PCM/Mech. Aux.

Marathon Electric Motors (India) Limited Paharpur Works 58, Taratala Road Kolkata-700024(INDIA)

LIST OF ROUTINE TESTING (INTERNAL INSPECTION)

1. Measurement of winding resistance in cold condition & calculation @ 20 Deg C SH. Heater Resistance (If applicable)
2. Insulation Resistance (Before and after HV Test)
3. High Voltage Test at 1.8 KV for 1 Min.and Space heater HV Test)
4. Direction of Rotation
5. No load test (Measurement of NL A, Voltage, NL Power and NL RPM)
6. Reduced run up voltage Test at (Rated volt/√3)
7. Locked Rotor test at Full load current

Note: All internal Test will be done as per IS12615

LHP

MARATHON

CGL

Chief Engineer
Thermal Projects Construction
TSGENCO, Vidyut Soudha,
Khairatabad, Hyd-500 082.

Rev-01, Page-02

QUALITY PLAN	CUSTOMER TSGENCO/BHEL	PROJECT TITLE (4X270 MW) BHADRADRI TPP	SPECIFICATION:
	BIDDER/ VENDOR :	QUALITY PLAN NUMBER PEC-PE-V0-411-554-A006	NUMBER :
SHEET 1 OF 2	SYSTEM	ITEM AC ELECT. MOTORS BELOW 55KW (LV)	SPECIFICATION TITLE / SECTION / VOLUME III

SL. NO.	COMPONENT/OPERATION	CHARACTERISTICS CHECK	CAT.	TYPE/ METHOD OF CHECK	EXTENT OF CHECK	REFERENCE DOCUMENT	ACCEPTANCE NORM	FORMAT OF RECORD	AGENCY P	AGENCY W	AGENCY V	REMARKS
1	2	3	4	5	6	7	8	9	10			11
1.0	ASSEMBLY	1.WORKMANSHIP	MA	VISUAL	100%	MANUF'S SPEC	MANUF'S SPEC	-DO-	2	-	-	
		2.DIMENSIONS	MA	-DO-	-DO-	MFG. DRG/ MFG. SPEC.	MFG. DRG/ MFG. SPEC.	-DO-	2	-	-	
		3.CORRECTNESS COMPLETENESS TERMINATIONS/ MARKING/COLOUR CODE	MA	VISUAL	100%	MFG.SPEC/ RELEVANT IS	MFG.SPEC. RELEVANT IS	-DO-	2	-	-	
2.0	PAINTING	1.SHADE	MA	VISUAL	SAMPLE	MANUFR'S SPEC/BHEL SPEC/RELEVANT STANDARD	BHEL SPEC. SAME AS COL 7	LOG BOOK	2	-	-	
3.0	TESTS	1.ROUTINE TEST INCLUDING SPECIAL TEST AS PER BHEL SPEC.	MA	-DO-	100%	IS-325/ BHEL SPEC. DATA SHEET	SAME AS COL 7	TEST REPORT	2	1		NOTE-1 & NOTE-3
		2.OVERALL DIMENSIONS & ORIENTATION	MA	MEASUREMENT & VISUAL	100%	APPROVED DRG/DATA SHEET	APPROVED DRG/DATA SHEET & RELEVANT IS	INSPN. REPORT	2	1	-	NOTE-1 & NOTE-3

BHEL	PARTICULARS	BIDDER/VENDOR
	NAME	
	SIGNATURE	

Bharat Heavy Electricals Limited PPEI Sector-16A NOIDA 201 301 PEM/Mech. Aux.

Wanshon Electric Motors (India) Limited Kolkata

Crompton Greaves Ltd., LT Motors Division, Mumbai-414111

20/11/2016

Chief Engineer
Thermal Projects Construction
TSGENCO, Mint Compound,
Khairatabad, Hyderabad.

Rev-01, page-03

	QUALITY PLAN	CUSTOMER TSGENCO/BHEL	PROJECT TITLE (4X270 MW) BHADRADRI THERMAL POWER PROJECT	SPECIFICATION NUMBER :
		BIDDER/ VENDOR :	QUALITY PLAN NUMBER PED- PE-V0-411-554-A006	SPECIFICATION TITLE :
	SHEET 2 OF 2	SYSTEM	ITEM AC ELECT. MOTORS BELOW 55KW (LV)	SECTION VOLUME III

SL. NO.	COMPONENT/OPERATION	CHARACTERISTICS CHECK	CAT.	TYPE/ METHOD OF CHECK	EXTENT OF CHECK	REFERENCE DOCUMENT	ACCEPTANCE NORM	FORMAT OF RECORD	AGENCY P	AGENCY W	AGENCY V	REMARKS
1	2	3	4	5	6	7	8	9	10			11
		3.NAMEPLATE DETAILS	MA	VISUAL	100%	IS-325 & DATA SHEET	IS-325 & DATA SHEET	INSPN. REPORT	2	1	-	

NOTES:

1 ROUTINE TESTS ON 100% MOTORS SHALL BE DONE BY THE VENDOR. HOWEVER, BHEL SHALL WITNESS ROUTINE TESTS ON RANDOM SAMPLES. THE SAMPLING PLAN SHALL BE MUTUALLY AGREED UPON (1 of each type)

2 WHERE EVER CUSTOMER IS INVOLVED IN INSPECTION, (1) SHALL MEAN BHEL AND CUSTOMERS BOTH TOGETHER.

3 FOR EXHAUST/VENTILATION FAN MOTORS OF RATING UPTO 1.5KW, ONLY ROUTINE TEST CERTIFICATES SHALL BE FURNISHED FOR SCRUTINY

Legends for Inspection agency

1. BHEL/CUSTOMER
2. VENDOR (MOTOR MANUFACTURER)
3. SUB-VENDOR (RAW MATERIAL/COMPONENTS SUPPLIER)

P. PERFORM
W. WITNESS
V. VERIFY

BHEL	PARTICULARS	BIDDER/VENDOR
	NAME	
	SIGNATURE	
	DATE	

BIDDER'S/VENDORS COMPANY SEAL

4.Motor of Rating below 30 Kw shall be cleared on the basis of TC as per IS -325 & Motor of rating 30 Kw and above inspection will be offered as per Approved OAP & Categorisation Plan.

Bharat Heavy Electricals Limited PPEI Sector-16A NOIDA-201301 PEM/Mech. Aux.

Crompton Greaves Ltd., LT Motors Division, MIDC, A.Nagar-414111

20/11/2016

Marathon Electric Motors (India) Limited Kolkata

Chief Engineer
Thermal Projects Construction
TSGENCO, Vidyut Soudha,
Khairatabad, Hyd...

		Issue No.	01
		Issue Date.	1-09-2017
		Rev. No.	1
		Rev.Date.	Nil.
Document No.	SIPL/8.1/F65/R0		

BHEL Doc. No. PE-V0-411-554-A007

QUALITY ASSURANCE PLAN / STANDARD QUALITY PLAN.

Customer :	M/s TSGENCO	PO NO:	4200329533	PO Date :	6-Dec-2018
Project :	4x270 MW Bhadradri TPS- Ventilation System	Fire Dampers with Belimo Actuator & Control panel.			
Product :	Fire Damper With Actuator & Control Panel.	Main Contractor: M/s BHEL			
Model :	WGD ,NFA S2 , SICP-A-1	Main Vendor:			
Job Card No :	ERMF18191221442	MANUFACTURE/SUB-VENDOR: SYSTEMAIR INDIA PVT. LTD.			

Sr No.	Description.	Reference document.	Type & Method of Check	Quantom of Check	Form of Record	Inspection By. SIPL	Customer	Third Party. of BHEL
	A) Incoming Inspection. (Raw Material.)							
1	Raw Material.							
#	GI Sheet (As per ASTM A653 CQ)	ASTM A653 CQ Standard	Lab test	Sample From Lot	Lab Test Report (Test Certificate) and Internal Inpsection Report.	R / I	R	R
#	Visual & Dimension check. Bush , Shaft, Actuator.	Manufacturing Standard/Approved Drawing/Data Sheet.	Visual/ Dimensional/ Fucational	Sample From Lot	Internal Inpsection Report.	I	R / I	R / I
	B) In process Inspection.							
1	Cutting,Bending, Punching, welding & Assembly.							
#	Dimension , visual & Operational.	As per Manufacturing Standard.	Visual/ Dimensional/ Fucational	Raondom	—	I	R / I	R / I
	C) Final Inspection							
1	Final Inspection Report. Dimension, visual & Operational with Actuator.	As per Manufacturing Standard/Approved Data Sheet/Approved Drawings.	Visual/ Dimensional/ Fucational	100%	Internal Inpsection Report. (10% of Dampers Recorded.)	I	R / I	R / I
2	Systemair India Pvt. Ltd. Test certificate.			—	Test Certificate.	R	R	R

Note:- 1) No Painting is requied as the material is of GI 2) Test report 90/120 Min fire rating damper tested as per UL-555 1995 from CBRI- ROORKEE to be submited.

PREPARED & CHEKED BY QAD	APPROVED BY	APPROVED BY Customer or Inspection Agency.

Note :
1) R- Review
2) I- Inspection by BHEL
3) SIPL- Systemair India Pvt. Ltd.
4) QAP - Quality Assurance Plan.
5) QAD- Quality Assurance Department.
6) QC- Quality Control

Systemair India Pvt. Ltd. Devarpanjal Village & Gram Panchayat, Shamirpet Mandal, Medchal Dist. Telangana-500 078.

Bharat Heavy Electricals Limited PPEI Sector-16A NOIDA-201 301 E&M/Mech. Aux.

24/5/19
Chief Engineer
Thermal Projects Construction
TSGENCO, Vidyut Soudha,
Khairatabad, Hyd-500 082.

R-1

Project : (4X270 MW) BHADRADRI THERMAL POWER PROJECT						
Pressure Drop Calculation for Air washer Pumps						
Ventilation Systems						
Item	Size/Qty	Water CAPACITY GPM	Length (approx) Ft.	Frictional drop (Ft) / 100 Ft.	Total Drop (Ft.)	
Water pipe						
Supply	150mm	572.37	49.2	3.4	1.67	
Return	150mm	572.37	49.2	3.4	1.67	
Nozzle					65.60	
Globe Valve						
150mm	1	572.37	170.6	3.4	5.8	
Motorised Butterfly Valve						
150mm	1	572.37	6.9	3.4	0.23	
GATE Valve						
150mm	2	572.37	6.9	3.4	0.47	
Y Strainer						
150mm	1	572.37	68.9	3.4	2.3	
NRV						
150mm	1	572.37	59	3.4	2.0	
Bend						
150mm	5		16	3.4	2.7	
Total Head in FT					83	FT
Head in FT including 20% as Safty factor					99	FT
					30	M

Selected Air washer Pump head = 30M.

Client	TELANGANA STATE POWER GENERATION CORPORATION LIMITED (TSGENCO)		
PROJECT	4 X 270 MW BHADRADI TPS AT MANUGURU, TELANGANA.		
MAIN/SUB CONTRACTOR		DOC NO	PE-V0-411-554-A201
PACKAGE	VENTILATION	REV NO	1

TECHNICAL DATA SHEET FOR Air-Washer Unit R-1

1.0	**Air-washer Unit**		
1.1	Manufacture's Name	Suvidha Air Engineers	
1.2	Make & Model No	Suvidha & AW 130	
1.3	Type of Unit	AIR WASHERS- Double Skin (in between GSS Channels)	R-1
1.4	Capacity (CMH)	130000 CMH	
1.5	Quantity (Nos.)	16 Nos.	
1.6	Location of Unit	AS PER APPROVED LAYOUT OF TG BUILDING	R-1
1.7	Overall Dimensions of Unit (L x W X H) mm	(6560 x 4000 X 5540 (5415 + 125))	
1.8	Material of Casing	Double Skin	R-1
1.8.1	Outer Skin	24 G GI Pre-Coated sheet	
1.8.2	Inner Skin	24 G GI Plain sheet	
1.9	Casing Panel Thickness	25 mm	
1.10	Insulation of panels	PUF (density : 38Kg +-2./Cu.M)	
1.11	Casing frame work	Extruded Aluminum profile	
1.12	Painting	All MS part shall be Expoxy painted Except GSS part	
1.13	Saturation Efficiency	Minimum 90 %	
1.16	Total Static Pressure of Airwasher (mm wg)	75 mmwg	
2.0	**TANK**		
2.1	Material of Tank((Both Inside And Outside)	5 mm M.S as per IS 2062	
2.2	Size of Tank (L x W X H) mm	2200 X 3950 X 800	
2.3	Painting	Inside and outside surface of tank shall be Epoxy Painted	
2.4	Qty	1 No. Each Air-washer	
3.0	**DISTRIBUTION SYSTEM**		
3.1	Intake louvers with bird screen	20 G GI Frame and 22 G GI Louvers	
3.2	Velocity of Air Flow(m/s)	2.24	R-1
3.3	Distribution Plate	18G GI Sheet (50% free area Perforated)	
3.4	Velocity of Air Flow(m/s)	2.24	
4	**SPRAY SECTION**		
4.1	No Of Spray Bank	Double Bank Spray Arrangement	
4.2	Spray Bank type	Opposed	
4.3	Water circulating piping	Galvanized Heavy class pipe as per IS 1239	
4.4	Face velocity	2.24 m/s	
4.5	Face Area	16.07 m2	
4.6	No. of Nozzle	216 Nos	
4.7	Orifice of Nozzle	6 mm	
4.8	Nozzle Material	Brass (Self Cleaning type)	R-1
4.9	Capacity of each Nozzle	0.6 CMH	
4.10	Pressure drop through Nozzle	2.0 Kg/cm2 (Max)	
4.11	Saturation efficiency	90 % (Approx.)	
4.12	Suction Screen Material of construction	SS (40 Mesh)	
5.0	**PRE FILTER**		
5.1	Manufacture's Name	Puromatic	R-1
5.2	Over All Size of Filter Along With Frame	610 x 610 x 50	
5.3	Type	Cassette	
5.4	Qty	40 Nos. + 2 Nos Blank off	
5.5	Filter Media	SS wire mesh	
5.6	Frame	16 G aluminum	
5.7	Air Velocity across filter	2.42 m/s	

Client	TELANGANA STATE POWER GENERATION CORPORATION LIMITED (TSGENCO)		
PROJECT	4 X 270 MW BHADRADI TPS AT MANUGURU, TELANGANA.		
MAIN/SUB CONTRACTOR		DOC NO	PE-V0-411-554-A201
PACKAGE	VENTILATION	REV NO	1

5.8	Filter face area	13.45 m2
5.9	Pressure drop across filter	Cleaned condition 5 mm wc, Dirty condition 7.5 mm wc
6.0	**DRIFT ELIMINATOR**	
6.1	Elimininator MOC	PVC extruded profiles in GSS holding frame
6.2	No of Bends	6 Bend
6.3	Thickness of Eliminator Material	Minimum 2 mm
6.4	Air velocity of eliminator	2.24 m/s
6.5	Face area of eliminator	16.14 m2
7.0	**Others**	
7.1	Inspection Door Size (Airtight)	1000 W X 1500 H - 2 Nos & 600 W X 1200 H (MM) - 1 Nos
7.2	Marine light	2 Nos
7.3	Ref GA Drawing	PE-V0-411-554-A201

R-1

R-1

NOTE:

1.Eliminator plates shall be 100% virgin PVC and UV stabilized.

2.Support ,Tie Rod & Space Bar,Nuts,Bolts- As per our GA drawing and OEM standard.

3. Ref Drawing No: PE-DG-411-100-M003 and PE-DG-411-100-M006

4.Moisture Eliminator Frame shall be made of 22 SWG GI sheet & GI angle of adequate strength

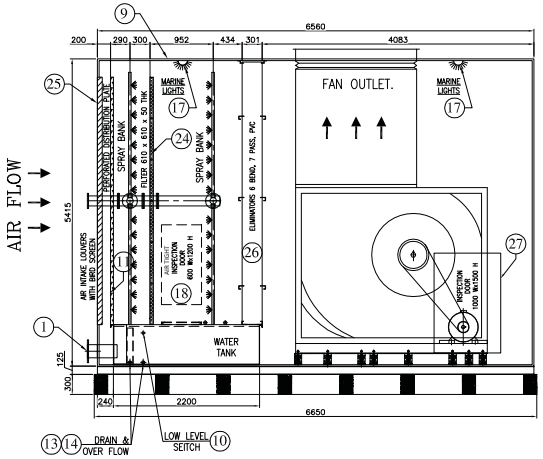

ELEVATION

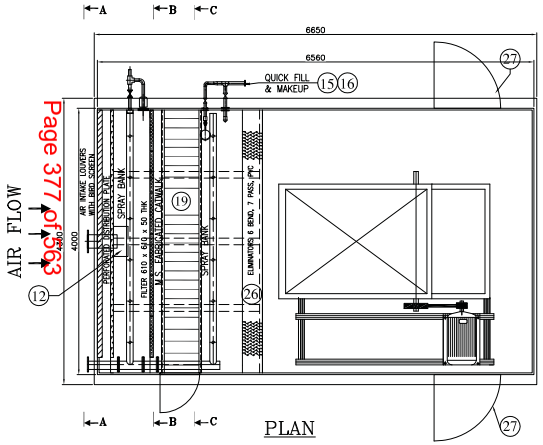

PLAN

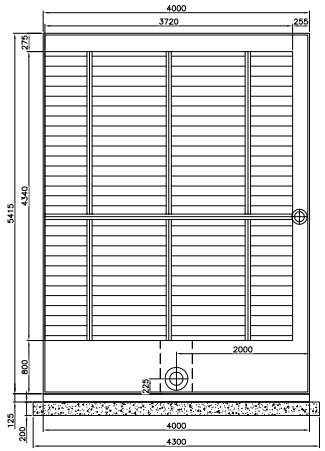

SECTION : 'AA'
AIR INTAKE LOUVERS DETAIL

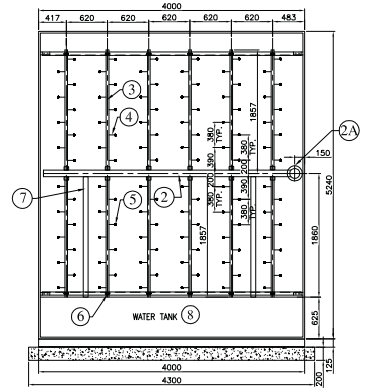

SECTION : 'CC'
SPRAY BANK DETAIL

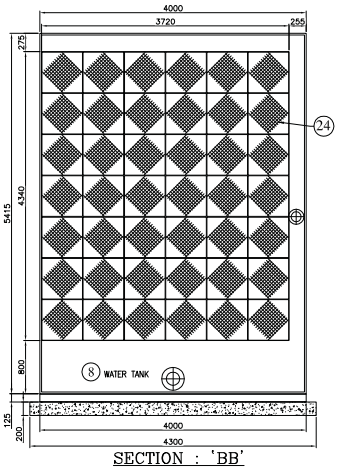

SECTION : 'BB'
FILTER DETAIL

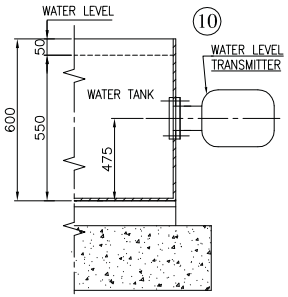

FIXING DETAIL OF
WATER LEVEL SWITCH

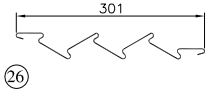

DETAILS OF ELIMINATOR
(6-BEND, 7-PASS, PVC)

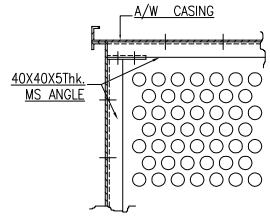

(11) DISTRIBUTION PLATE
FRAME FIXING DETAIL

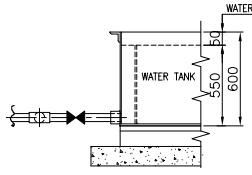

ELEVATION

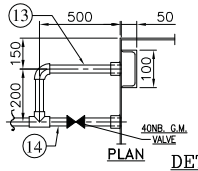

PLAN

DETAIL-'O'
OVER FLOW &
DRAIN PIPE

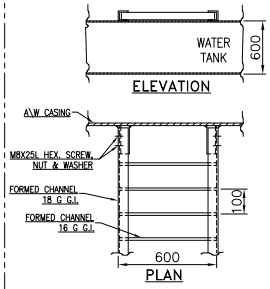

(19) DETAILS OF CATWALK
(MS FABRICATED)

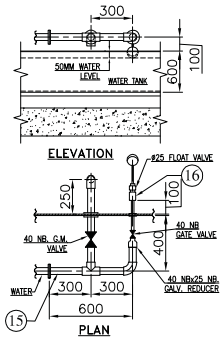

MAKE-UP & QUICK FILL
WATER PIPELINE ASSLY.

BILL OF MATERIAL FOR EACH PLANT

SR.No.	BILL OF MATERIAL	QTY.
1	ø200 SUCTION PIPE 150 LONG, WITH ONE END FLANGE AND OTHER END WELDED WITH A/W TANK	1
2	ø100 HEADER PIPE 3775 LONG (WITH WELDED ø40 BSP COUPLING FOR STAND PIPE FIXING) WITH ONE END FLANGE AND OTHER END BLIND	2
2A	ø150 COMMON HEADER PIPE 1990 LONG WITH ONE END FLANGE AND OTHER END BLIND	1
3	ø40 STAND PIPE 1857 LONG (WELDED WITH ø3/8"BSP COUPLING ON BOTH SIDE FOR NIPPLE FIXING) WITH BOTH END BLIND	24
4	ø3/8"G.I. STANDARD NIPPLES, 100mm LONG	216
5	'B' TYPE BRASS NOZZLES (Ø6mm ORIFIC)	216
6	M6-'U' TYPE BOLT,NUTS & WASHERS FOR ø40mm G.I. STAND PIPE FIXING WITH SUPPORTS	24 SET
7	CHANNEL SUPPORT FOR HEADER PIPE	2 SET
8	WATER TANK 2200 Lx3950 Wx800 H MADE FROM 5mm THK IS-2062 WITH INSIDE & OUTSIDE SPRAY GALVANIZED	1
9	AIR WASHER CASING 6560 Lx4000 Wx5415 H DOUBLE SKIN TYPE HOUSING INNER SKIN 24G (0.6mm PLAIN G.I.), OUTER SKIN 24G (0.6mm PRE COATED G.I.) GSS PANEL THK-25 mm, INSULATION DENSITY-38 Kg/M3	1
10	WATER LEVEL TRANSMIT	1
11	DISTRIBUTION PLATE (18G G.I.) WITH 40x40x5 THK FIXING ANGLE	1 SET
12	WATER SUCTION STRAINER (SS)	2 SET
13	ø40mm G.I. OVER FLOW SIPHON ASSEMBLY WITH ONE END FLANGE	1
14	ø40mm G.I. OVER DRAIN PIPE CONNECTION ASSEMBLY WITH ø40mm GM GATE VALVE	1
15	ø25mm G.I. WATER MAKE-UP & ø40mm G.I. QUICK FILL ASSEMBLY WITH 1 No.x ø25mm GM GATE VALVE & 1No.x ø40mm GM GATE VALVE	1
16	ø25mm G.I. PIPE 100mm LONG WITH ONE END FLANGE & OTHER END COUPLING EITH ø25mm SIZE FLOAT VALVE	1
17	MARINE LIGHTS 40W	2
18	600mmW x 1200mmH HINGED TYPE ACCESS DOOR WITH GLASS WINDOW	1
19	600mmW X 3950 mm LONG MS FABRICATED CAT WALK	1
20	ø100 SIZE RUBBER GASKETS,(MINIMU 3 MM THICK)(NOT SHOWN)	LOT
21	ø40 SIZE RUBBER GASKETS,(MINIMU 3 MM THICK)(NOT SHOWN)	LOT
22	ø32 SIZE RUBBER GASKETS,(MINIMU 3 MM THICK)(NOT SHOWN)	LOT
23	ø25 SIZE RUBBER GASKETS,(MINIMU 3 MM THICK)(NOT SHOWN)	LOT
24	CASSETTE TYPE PRE FILTER 90% DOWN TO 10 MICRONS SIZE 610x610x50mm 16G ALUM. FRAME SS WIRE MESH, (2NOS. FILTER IS BLANK OFF)	40
25	AIR INTAKE LOUVERS WITH BIRD SCREEN SIZE 3720 Wx4320 H LOUVER-22G G.I., FRAME-20G G.I.	1 SET
26	ELIMINATOR 6 BEND 7 PASS PVC 3940 LONG WITH G.I. FIXING FRAME	1 SET
27	1000mmW x 1500mmH HINGED TYPE ACCESS DOOR WITH GLASS WINDOW	2
28	ALLUM. READYMADE LADDER (STAIR CASE) FOR FILTER AND NOZZLE MAINTENANCE	1

NOTES:
1. ALL DIMENSIONS ARE IN MM, UNLESS OTHERWISE STATED.
2. AIR WASHER INTER PIPING SHALL BE OF GALVANISED STEEL
3. ALL FLANGES SHALL BE CONFIRM TO ANSI B 16.5
4. ALL INSIDE & OUTSIDE SURFACE,INSIDE COMPONENTS OF AIR WASHER UNIT EXCEPT GSS COMPONENTS SHALL BE EPOXY PAINTED.
5. MOISTURE ELIMINATORS SHALL BE MADE FROM PVC 6 BEND 7 PASS.
6. ALL EQUIPMENT SHALL BE DESIGNED FOR CONTINUOUS DUTY.
7. ALL INSIDE & OUTSIDE SURFACE, INSIDE COMPONENTS OF AIR WASHER UNIT EXCEPT GSS COMPONENTS SHALL BE EPOXY PAINTED.

AIR WASHER QTY.
LOOKING DOOR FROM AIR ENTRY SIDE

RHS	LHS	LAYOUT LOCATION
4	4	AT (+) 21.0M. E.L BC BAY
4	4	AT (-) 0.10M E.L A ROW

SATURATION EFFICIENCY 90%

QTY - 16 Nos.

CUSTOMER : TELANGANA STATE POWER GENERATION CORPORATION LTD.

CUSTOMER'S CONSULTANT : DESEIN PRIVATE LIMITED

PROJECT : 4 x 270 MW BHADRADRI TPS AT MANUGURU, KHAMMAM DISTRICT, TELANGANA

BHARAT HEAVY ELECTRICALS LTD.
POWER SECTOR
PROJECT ENGINEERING MANAGEMENT
NOIDA, (UP)

REV NO.	DATE	REMARKS	NAME	SIGN	NAME	SIGN
			DRAWN		CHECKED	

TITLE : DATA SHEET & GA FOR AIR WASHER ALONGWITH FAN AND PUMP WITH FOUNDATION DETAILS.

Drg No. PE-V0-411-554-A201
SCALE - 1:100 SHEET 1 OF 1 REV. 0

VENTILATION PUMPS FOR AIR WASHERS

PROJECT	(4X270 MW) BHADRADRI THERMAL POWER PROJECT		
PACKAGE	VENTILATION SYSTEMS		
DOC TITLE	TECHNICAL DATA SHEET & GA DRAWING FOR VENTILATION AIR WASHER PUMPS		
DOC NO:	PE-V0-411-554-A201		
REV NO:	01		
Sl No	**DESCRIPTION**	**UNIT**	**Location:**
	TECHNICAL PARTICULARS		
1	Type		HORIZONTAL CENTRIFUGAL RADALLY SPLIT CASING PUMPS
2	MAKE		KIRLOSKAR BROTHERS LIMITED
3	Operation of Pump		Continuous
4	Liquid handled		WATER
5	Specific Gravity		1
6	Temperature	DegC	AMBIENT
7	Pump Model name		CPHM 100 - 32 N
8	No of Stages		1
9	Q'ty	No.	32
10	Pump Capacity	M^3/Hr	130
11	Head @ Rated flow (130cmh)	M	30
12	Minimum Constant flow	M^3/Hr	26
13	Maximum Power Consumption In The Entire Operating Range	KW	16.61
14	NPSHr	M	1.83
15	Available NPSHa	M	Flooded
16	Efficiency	%	72
17	Shut off Head	m	35.16
18	Pump Rated Speed	RPM	1450
19	First critical speed in RPM	RPM	± 30 % of Nominal Speed
20	Direction Of Rotation		Clockwise Looking From Drive End
21	Rated Impeller Dia	mm	322
22	Pump Design Standard		As per KBL Standard
23	Pump Testing Standard		ISO 9906 Gr 2B
24	Coupling Type		SPACER SPIDER RRL 150
25	Flange standard		BSEN 1092 PN 16 FF
26	Suction	mm	125
27	Delivery	mm	100
28	Suction Nozzle Size	mm	Refer Pump GAD
29	Nozzle Orientation		Side Suction, Top Discharge
30	Sealing Type		MECHANICAL SEAL
31	Sealing Material		CARTRIDGE SEAL LPS 155/C MULTI COIL UNBALANCED
32	Amplitude of vibration (RMS)		1.5 MM/S
33	Noise Level		85dB at 1 mtr distance
34	Weight of Pump and Motor	Kg	379 - approx
35	Pump Impeller And Other Accessories Shall Not Damage In Flow Reversal		NOTED AND CONFIRMED
36	Desing pressure of casing shall be 16 bar minimum		NOTED AND CONFIRMED
	PRIME MOVER PARTICULARS		
37	Pump input @ Rated flow (130 cmh)	kW	10.61
38	Selected Motor	kW	18.5
39	Supply	V	415V (+/-10%)
40	Frequency	Hz	50Hz (+/- 5%)
41	No of Poles	No.	4
42	Speed	RPM	1470
43	Frame Size		180M
44	Make		CGL
	MATERIAL OF CONSTRUCTION		
45	Casing		CI IS 210 FG GR 260 Ni 2.5 (Min)
46	Impeller (Closed Type)		BRONZE (IS 318 GR LTB II)
47	Type of Impeller		Closed
48	Wear Ring (Replaceable type)		BRONZE (IS 318 GR LTB II)
49	Pump Shaft		ST ST ASTMA 276 - 316 ANLD
50	Shaft Sleeve		ST ST ASTMA 276 - 316 ANLD

51	Coupling		CI IS 210 FG GR 260
52	Lantern Ring		NYLON
53	Sealing		MECHANICAL SEAL
54	Bearing Make		SKF / FAG /eqv (DEEP GROOVE BALL BRG)
55	Bearing Type		Anti-Friction Type
56	Type of Lubrication		Grease
57	Base Frame		IS 2062 MS
58	Painting		AS PER SPECIFICATION
59	Testing		AS PER APPROVED QAP
60	Rest of Parts		AS PER MANUFACTURE STANDARD
61	Accessories		Bare Pump, Common Base Plate with Foundation Bolts, Coupling, Coupling Guard, Companion Flanges complete with Nut & Bolts

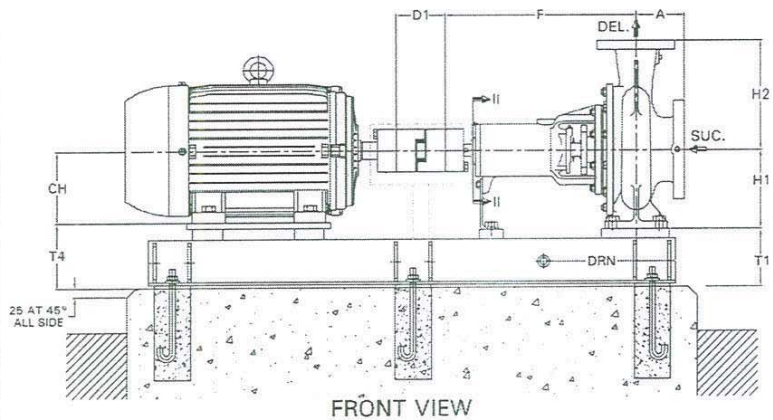

FRONT VIEW

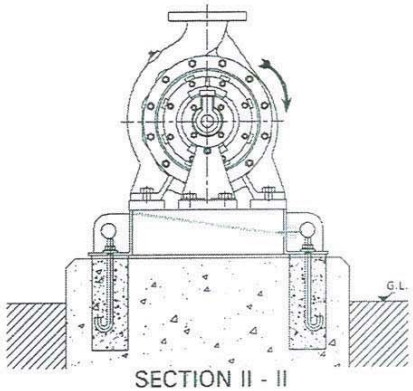

SECTION II - II

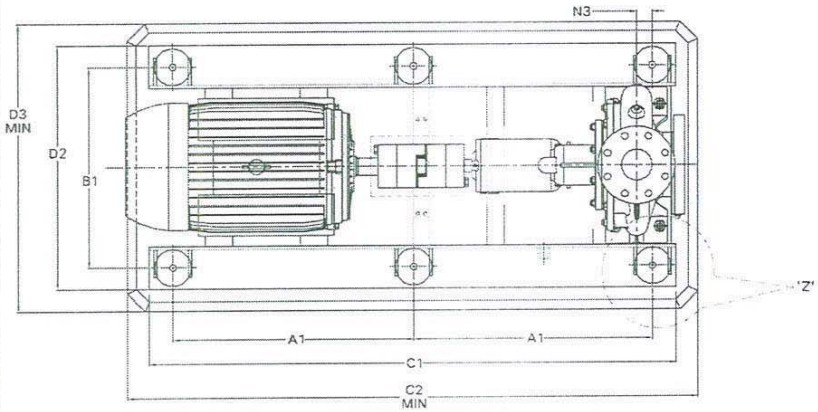

PLAN

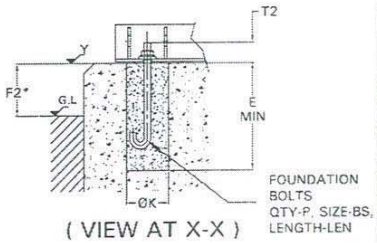

(VIEW AT X-X)

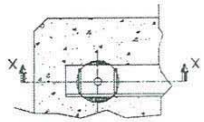

DETAILS AT 'Z'

Enriching Lives

PUMP DUTIES			
CAPACITY	130.0 m3/h	EFFICIENCY	72 %
TOTAL HEAD	30.00 m	PUMP INPUT	14.83 kW
DENSITY	1.000 SG	NPSHR	1.83 m

FLANGE DRILLING STANDARD AND DETAILS					
SUCTION	BS EN1092 PN16 FF		DELIVERY	BS EN1092 PN16 FF	
	NOM. SIZE	RF DIA.	P.C.D.	NO OF HOLES	HOLE SIZE
SUCTION	125 mm	N.A.	210 mm	8	18.00 mm
DELIVERY	100 mm	N.A.	180 mm	8	18.00 mm

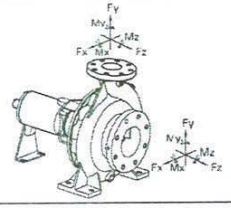

ALLOWABLE NOZZLE LOADING		
FORCES		
	SUCTION	DELIVERY
Fx	255.0 kgf	255.0 kgf
Fy	325.0 kgf	325.0 kgf
Fz	210.0 kgf	210.0 kgf
MOMENTS		
	SUCTION	DELIVERY
Mx	1,324 N.m	1,324 N.m
My	883 N.m	883 N.m
Mz	686 N.m	686 N.m

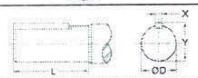

SHAFT END DETAILS	D	X	Y	L
PUMP	42.00	12.00	45.00	110
MOTOR	48.00	14.00	51.50	110

TAPPING DETAILS			
DESCRIPTION	SIZE/TYPE	DESCRIPTION	SIZE/TYPE
SUCTION GAUGE	1/2"BSP	BRG. COOLING IN/OUT	NA
DELIVERY GAUGE	1/2"BSP	PAD COOLING IN/OUT	NA
CASING DRAIN	1/2"BSP	PRIMING INLET	NA
CASING VENT	NA	BASE DRAIN	1/2" BSP

ADDITIONAL DATA			
STATIC LOAD	378.8 kg	DYNAMIC LOAD	473.5 kg
GD^2 OF PUMP	0.68 kg.m2		
BASE TYPE	STANDARD	BASE MATERIAL	MS
COUPLING TYPE	SPACER SPIDER	GUARD MATERIAL	MS
COUPLING SIZE	RRL150	F BOLT MATERIAL	MS
DIRECTION OF ROTATION FROM DE		CLOCKWISE	

PUMP	CPHM 100/32N	PUMP WT.	134.0 kg
DRIVER MAKE	CGL	DRIVER WT.	174.0 kg
DRIVER RATING	18.5KW	BASE WT.	61.00 kg
DRIVER SIZE	180M	COUPLING WT.	9.77 kg
RATED SPEED	1450RPM	PUMPSET WT.	378.8 kg
ENQ. NO./DATE	e-mail /	QUANTITY	1
PO. NO./DATE	-	TAG NO.	001
QUOTATION NO.	283967	DATE	-
O/A NO.	-	MISI	-
CUSTOMER	BHEL/S&W		
END USER	TSGENCO		
PROJECT	Bhadadri ventilation		
CONSULTANT	-		
SERVICE	-		

Kirloskar Brothers Limited
KIRLOSKARVADI - 416308, DIST.- SANGLI (INDIA)

GENERAL ARRANGEMENT DRAWING

DRAWING NO. TF78945307-0

NOTES:
- ALL DIMENSIONS ARE IN mm; DIMENSIONS WITHOUT TOLERANCE FOR WELDED PARTS ARE AS PER ISO13920-D.
- GROUTING TO BE DONE UP TO LEVEL Y TO AVOID VIBRATIONS.
- CIVIL ENGINEERING DETAILS '*' SHOWN ARE TENTATIVE AND TO BE DESIGNED AND FINALIZED AT CUSTOMER END.
- BEARINGS ARE GREASE LUBRICATED

R-1

IMPORTANT: THIS DRAWING IS THE PROPERTY OF Kirloskar Brothers Limited AND MUST NOT BE USED OR COPIED WITHOUT THEIR AUTHORITY IN WRITING.

BASE NO	A	A1	B1	BS	C1	C2	CH	D1	D2	D3	DRN	E	F	F2	-	H1	H2	-	-	-
13723UDS18	140	590	480	M16	1,288	1,480	180	140	560	780	260	300	530	200	-	250	315	-	-	-

K	LEN	N3	P	T1	T2	T4	-	-	-	-	-	-	-	-	-	-	-	-	-	-
100	250	40.00	6	95.00	50.00	165	-	-	-	-	-	-	-	-	-	-	-	-	-	-

Pump Performance Datasheet

Customer	: TSGENCO/BHEL/ S&W R-1	Quote number	: 275697
Customer enquiry	: e-mail	Pump Size	: CPHM 100/32N
Project	: (4X270 MW) BHADRADRI TPS R-1	Stages	: 1
Item number	: 001	Based on curve number	: RDH91017 Rev 0
Usage - Tertiary	:	Date last saved	: 05 Feb 2018 2:47 PM
Quantity	: 32 R-1	Note - Only duty point is guaranteed as per testing standard.	

Operating Conditions

Flow, rated	: 130.0 m3/h
Differential Head (requested)	: 30.00 m
Differential Head (actual)	: 30.00 m
Suction pressure, rated / max	: 0.00 / 0.00 bar.g
NPSH available, rated	: Ample
Frequency	: 50 Hz

Performance

Speed, rated	: 1450 rpm
Impeller diameter, rated (approx.)	: 322 mm
Impeller diameter, maximum	: 329 mm
Impeller diameter, minimum	: 260 mm
Efficiency	: 72 %
NPSH required / margin required	: 1.83 / 0.50 m
nq (imp. eye flow) / S (imp. eye flow)	: 20 / 181 Metric units
Minimum Continuous Safe Flow (MCSF)	: 26.00 m3/h
Head, maximum, rated diameter (approx.)	: 35.16 m
Head rise to shutoff (approx.)	: 17.21 %
Flow, best eff. point	: 124.2 m3/h
Flow ratio, rated / BEP	: 104.65 %
Diameter ratio (rated / max)	: 97.87 %
Head ratio (rated dia / max dia)	: 91.14 %
Cq/Ch/Ce/Cn [HI2004]	: 1.00 / 1.00 / 1.00 / 1.00
Selection status	: Acceptable
Performance testing standard	: ISO 9906 / ANSI-HI 14.6 Gr 2B

Liquid

Liquid Type/ Application	: Chemical
Additional liquid description	: WATER
Solids diameter, max	: 0.00 mm
Solids/Bagasse/Stock consistency by volume	: 0.00 %
Temperature, max	: 20.00 deg C
Fluid density rated	: 1.000 SG
Viscosity, rated	: 1.00 cSt
Vapor pressure, rated	: 0.00 bar.a

Material

Material selected	: Refer Construction Datasheet

Pressure Data

Maximum working pressure	: 3.44 bar.g
Maximum allowable working pressure	: 16.00 bar.g
Maximum allowable suction pressure	: 2.00 bar.g
Hydrostatic test pressure	: 13.73 bar.g

Driver & Power Data (@Max density)

Driver sizing specification	: Rated Power
Margin over specification	: 20.00 %
Service factor	: 1.00
Power, hydraulic	: 10.61 kW
Power, rated	: 14.83 kW
Power, maximum, rated diameter	: 16.61 kW
Minimum recommended driver rating	: 18.50 kW / 24.81 hp

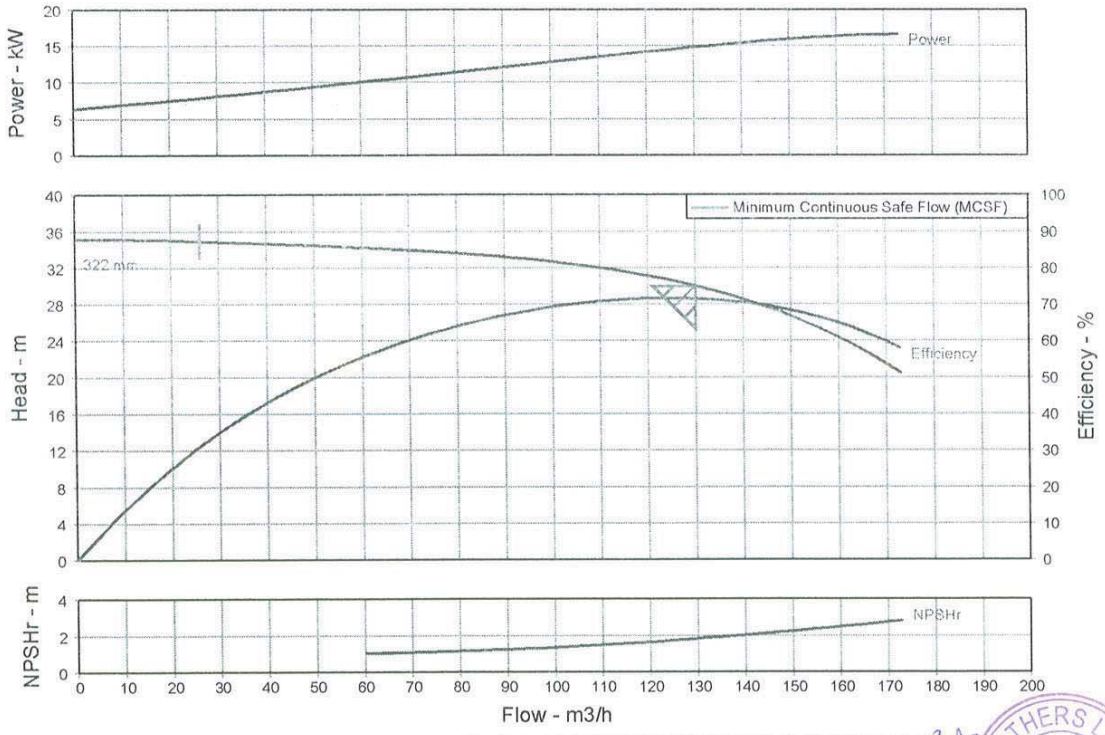

KIRLOSKAR BROTHERS LIMITED Kolkata

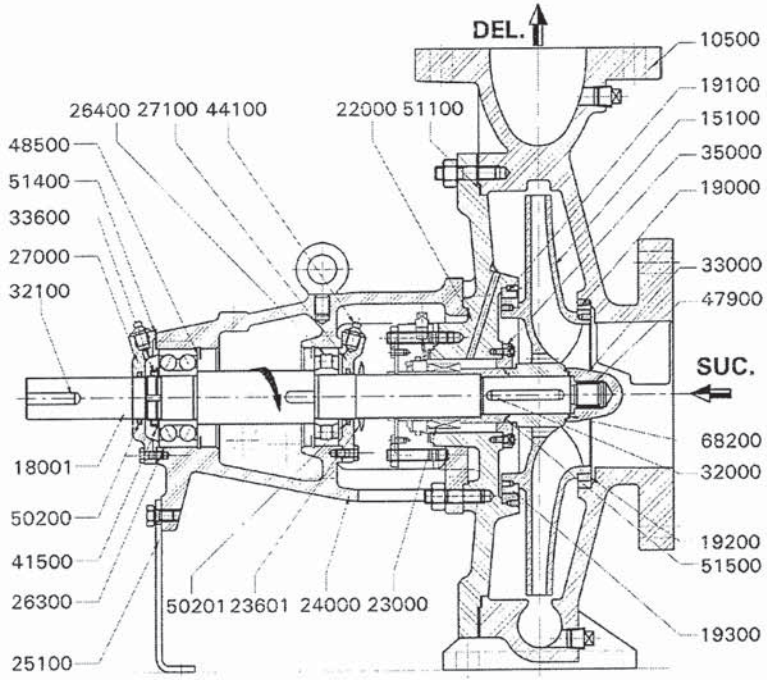

Enriching Lives

PART NO.	PART DESCRIPTION	MAT. CODE	MOC DESCRIPTION	QTY
10500	PUMP CASING	563	CI IS210:FG260 Ni2.5(MIN)	1
15100*	ENCLOSED IMPELLER	110	BR IS:318 GR-LTB2	1
18001*	PUMP SHAFT	251	ST ST ASTM A276-316 ANLD	1
19000*	CSG. WEAR RING - SUC. SIDE	110	BR IS:318 GR-LTB2	1
19100*	CSG. WEAR RING - DEL. SIDE	110	BR IS:318 GR-LTB2	1
19200*	IMP. WEAR RING - SUC. SIDE	110	BR IS:318 GR-LTB2	1
19300*	IMP. WEAR RING - DEL. SIDE	110	BR IS:318 GR-LTB2	1
22000	CASING COVER	563	CI IS210:FG260 Ni2.5(MIN)	1
23000*	MECHANICAL SEAL	998	EAGLE BURGMANN P11 C/SIC-CART SEAL	1
23601	LIQUID DEFLECTOR	370	NATURAL RUB ASTMD2000AA-70SHORE/7MPa	1
24000	BEARING HOUSING	012	CI IS 210-FG 260	1
25100	SUPPORT FOOT	042	MS IS:5986-Fe410WA (OLD-IS:1079)	1
26300*	ANGULAR CONTACT BEARING	000	STEEL	1
26400*	CYLINDRICAL ROLLER BEARING	000	STEEL	1
27000	BEARING COVER DE	012	CI IS 210-FG 260	1
27100	BEARING COVER NDE	012	CI IS 210-FG 260	1
32000*	KEY FOR IMPELLER	251	ST ST ASTM A276-316 ANLD	1
32100	KEY FOR COUPLING	053	CS IS1570:40C8 HOT RLD	1
33000	IMPELLER NUT	253	ST ST ASTM A276-410 ANLD	1
33600*	BEARING LOCK NUT	052	CS IS1570:20C8 HOT RLD	1
35000*	STUFFING BOX BUSH	110	BR IS:318 GR-LTB2	1
41500*	LOCK WASHER -BRG.LOCK NUT	050	CS IS1570:10C4 HOT RLD	1
44100	GREASE NIPPLE	444	CS IS:1367 Part3 CL4.6 CDP	2
47900*	HELICOIL SCREW LOCK INSERT	250	ST ST ASTM A276-304 ANLD	1
48500*	INTERNAL CIRCLIP	054	SPRING ST IS:4072-80C6	2
50200*	FELT RING -DE SIDE	375	FELT	1
50201*	FELT RING -NDE SIDE	375	FELT	1
51100*	GASKET : CASING COVER	702	NON ASBESTOS FERROLITE NAM37 OR EQ	1
51400*	GASKET : BEARING COVER	702	NON ASBESTOS FERROLITE NAM37 OR EQ	2
51500*	GASKET : SH. SLEEVE & IMP.	702	NON ASBESTOS FERROLITE NAM37 OR EQ	1
68200*	GASKET : IMP. & IMP. NUT	702	NON ASBESTOS FERROLITE NAM37 OR EQ	1

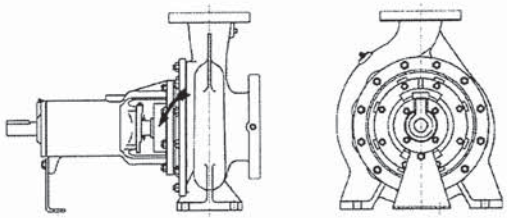

STUFFING BOX SEALING: AS PER API PLAN 01

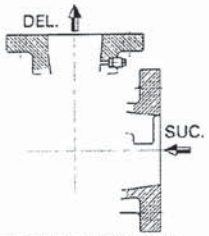

PUMP FLANGES (FF)

PUMP	CPHM 100/32N	MOC	96
ENQUIRY NO./DATE	e-mail /	QUANTITY	1
PO. NO./DATE	-	TAG NO.	001
QUOTATION NO.	283967	DATE.	
O/A. NO.	-	MISI.	
CUSTOMER	BHEL/S&W		
END USER	TSGENCO		
PROJECT	Bhadadn ventilation		
CONSULTANT	-		
SERVICE	-		

R-1

Kirloskar Brothers Limited
KIRLOSKARVADI - 416308, DIST.- SANGLI (INDIA)

CROSS SECTIONAL DRAWING

DRAWING NO. TC78945307-0

NOTES:
- " * " INDICATES RECOMMENDED SPARES.
- FASTENERS IN LIQUID CONTACT ARE IN CS
-

IMPORTANT: THIS DRAWING IS THE PROPERTY OF Kirloskar Brothers Limited. AND MUST NOT BE USED OR COPIED WITHOUT THEIR PRIOR AUTHORITY IN WRITING.

TECHNICAL DATA SHEET OF CENTRIFUGAL FLOW FAN

Project : (4X270 MW) BHADRADRI TPS	**OWNER : TSGENCO**
Package : VENTILATION SYSTEM	**Main Contractor : B. H. E. L.,**
SPECIFICATION NO :	

DOCUMENT NO : AFF/ENQ/01 Sheet 1 of 2

SL No	DESCRIPTION	TECHNICAL DATA
	General Information	
1	Fan Designation	289/7-1600 DI
1.1	Application System	Ventilation Air Washers(16 nos. Air washers for MPH,)
1.2	No Required	16 nos
1.3	Location	
2	**Design Data**	
2.1	Fan Type	Double Inlet Centrifugal Flow Fan
2.2	Type of Blades	Aerofoil
2.3	Arrangement	3
2.4	Discharge Direction	As Per GA Drawings
2.5	Duty	Continuous
2.6	Manufacturer	MARATHON Electric Motors (India) Limited
2.7	Model No.	289/7-1600 DI
2.8	Specific Weight of Air at Temp.	1.2 kg/M3 at 20°c
2.9	Capacity / Selected Air Flow	1,30,000 M3/hr
2.10	Static Pressure at Rated Speed at 20°c	75 mmwg
2.11	Fluid Handled	Atmospheric Air
2.12	Suction Temperature	1.2 kg/M3 at 20°c
2.13	Impeller Rated Speed	542 rpm
2.14	Shaft Power At operating speed at 20°c	35 kw
2.15	Fan Static Efficiency	71.83%
3	**Material**	
3.1	Fan Scroll	IS:1079 gr 'O'/Heavy Gauge MS.(IS.2062.Gr.B) with
3.2	Fan Casing Side	IS:1079 gr 'O'(3.15MM Mini) Galvanized
3.3	Impeller	M.S. sheet / plate (IS2062Gr.B)
3.4	Impeller Back Plate	IS:2062 gr 'B'
3.5	Impeller Shroud	IS:2062 gr 'B'
3.6	Impeller Blade (Aerofoil)	IS:1079 gr 'O'
3.7	Impeller Hub	IS:2062 gr 'B'
3.8	Shaft	En - 8
3.9	Support Frame (Bearer Bar)	IS:2062 gr 'B'
3.10	Flexible Connection	Noted & Confirmed
3.11	V Belts	Std. Flexure Make ISI marked (IS 4776)
3.12	V Pulley	C.I. (IS:210 Gr 20)
3.13	Slide Rail	C.I. (IS:210 Gr 20)
3.14	Connectinnecting Piece	YES
3.15	Bots & Nuts	M.S Epoxy painted
3.16	Vibration Isolating Pad if any	Yes
4	**Accessories**	
4.1	Common Channel Base	Provided refer GA Drawing
4.2	Anchor Bolts	Yes
4.3	Vibration Isolator	Yes
4.4	V Pulley	C.I. (IS:210 Gr 20)
4.5	V Belts	Std. Flexure Make ISI marked (IS 4776)
4.6	Belt Guard	IS:1079 gr 'O'
4.7	Outlet Damper	Yes
4.8	Inlet Guard	Provided refer GA Drawing
4.9	Inlet Vane (Variable)	NA
4.10	Drain Valve	Provided refer GA Drawing
5	**Motor**	
5.1	Motor By	LHP
5.2	Selected Motor	45 kw x 4 Pole IE-3
5.4	Painting of Fans	Provided refer GA Drawing

R-1

Note: Power Supply: 415V (+/-10%), Testing will be as per Approved QAP, Fluid handled: Water, Blade Type: Aerofoil, Impeller diameter mentioned in the GA, Type of drive: mentioned. Number of V-belts, V belt MOC, Fan Design code, vibration isolators detail, Fan construction class & critical speed as per OEM.
Outlet damper, motor canopy and outlet flexible connection will be provided

DRAWING NO.	REV
C12.R6.01.00.00. AC6190	01

REF. DRG. NO.

For General Tolerance,Definition of various Symbols and Instructions refer Drawing No. CP3933/*.
*(Rev. No.) should be taken from online "Drawing Master"

IF IN DOUBT , PLEASE ENQUIRE

These drawing and design are the property of Marathon Electric Motors (India) Limited. These must not be copied or lent to any other party without the written consent of Marathon Electric Motors (India) Limited.

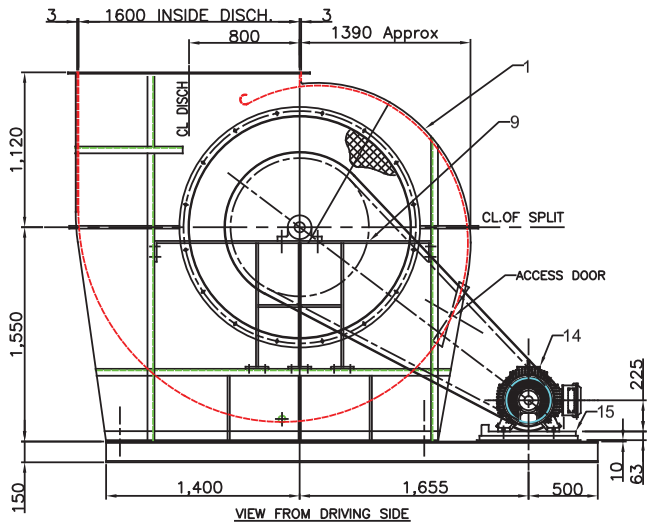

VIEW FROM DRIVING SIDE

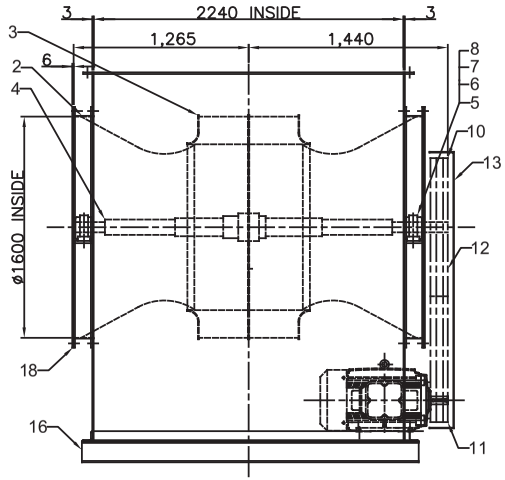

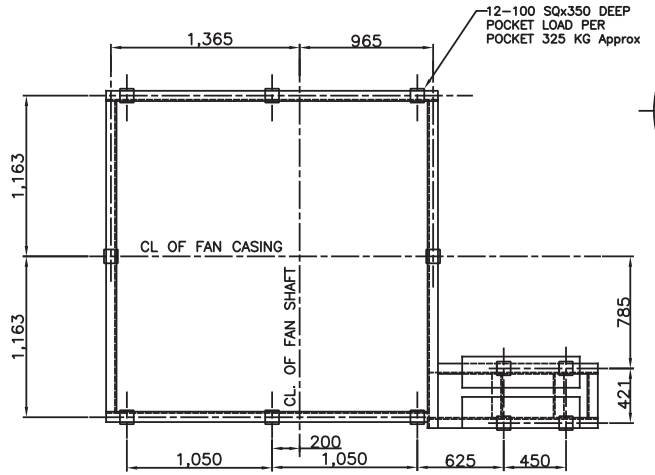

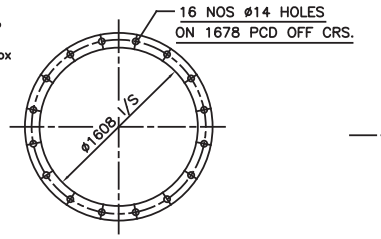

DETAIL OF INLET FLANGE
65X6 FLAT BAR.

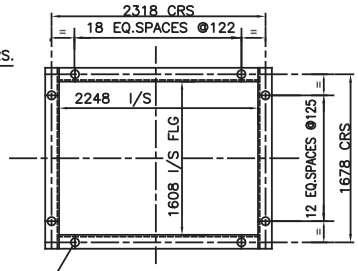

DETAIL OF OUTLET FLANGE
65X65X6 ANGLE

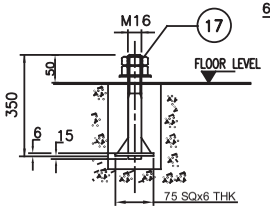

DET. OF FOUNDATION BOLT

SL NO	DESCRIPTION	QTY	MATL	REMARKS
1	CASING,INSP DOOR WITH DRAIN PLUG	1	IS:1079,gr'O' UP TO 3.15 Thk IS:2062,	SCROLL & SIDE 3 mm
2	INLET CONE	2	IS:1079,gr'O' UP TO 3.15 Thk IS:2062,	
3	IMPELLER (BACK PL.8 mm,SHROUD 4 mm,BLADE 2 mm)	1	IS:1079,gr'O' UP TO 3.15 Thk IS:2062,	BLADE AEROFOIL
	IMPELLER HUB	1	IS:2062,	
4	SHAFT WITH TWO KEYS	1	En-8	
5	SPHERICAL ROLLER BEARING 22217EK+H317	2	SKF	
6	LOCATING RING NO 10/150	1	STD.	FOR LOC.BRG. ONLY
7	HOUSING NO : 517	2	IS:210,GR4600	
8	M6 GREASE NIPPLE	2		
9	BEARER BAR ASSY	2	IS:1079,gr'O' UP TO 3.15 Thk IS:2062,gr'A' 4 Thk & ABOVE	
10	FAN PULLEY	1	C.I. (IS:210 Gr 20)	
11	MOTOR PULLEY	1	C.I. (IS:210 Gr 20)	
12	V-BELT	1 SET	STD.	MAKE 'FLEXURE'
13	BELT GUARD	1	IS:1079,gr'O' UP TO 3.15 Thk IS:2062,gr'A' 4 Thk & ABOVE	
14	MOTOR : 45 KW4 POLE FR 225M	1	IE-3	
15	SLIDE RAIL 450 CRS	2	IS:210,GR4600	
16	COMMON CHANNEL BASE	1	IS:1079,gr'O' UP TO 3.15 Thk IS:2062,gr'A' 4 Thk & ABOVE	
17	M16x350 LG FOUNDATION BOLT WITH NUT & WASHER	12	IS:1079,gr'O' UP TO 3.15 Thk IS:2062,gr'A' 4 Thk & ABOVE	
18	WIRE MESH GUARD 18 SWG	2	IS:1079,gr'O' UP TO 3.15 Thk IS:2062,gr'A' 4 Thk & ABOVE	

ST. WT : 3900 KG APPROX
DYNAMIC LOAD : 4875 KG APPROX

DUTY PARAMETERS OF FAN	
FAN TYPE	CENTRIFUGAL DIDW
CAPACITY , M3/HR	1,30,000
STATIC PRESSURE mmwg AT 20°C	75
FAN SPEED, RPM	542
SHAFT POWER KW AT 20°C	35
OUTLET VELOCITY M/SEC.	10.08

NOISE LEVEL AT 1 M 85 dBA (IN FREE FIELD COND.)
FAN DYNAMICALLY BALANCED AS PER GR 6.3 ISO:1940.
VIBRATION LEVEL AS PER IS:14817(PART-1),CLASS-IV,LEVEL B

PAINTING :
FAN CASING,IMPELLER& INLET CONE ZINC SPRAYED 50-60 MICRON, OTHERS PAINTED WITH 2 COATS OF PRIMER & 2 COATS OF SYNTHETIC ENAMEL FINISH PAINT OF COLOUR D.A.GREY (SHADE 632 IS:5) TOTAL PAINT THICKNESS 140 MICRON

REV.	DATE	DETAIL OF REVISION	DONE BY	APPRVD	DDN NO.	DCN NO.
01	16.08.18	PERFORMANCE DATA UPDATED.	B.M.	B.M.		

EC18C14461/01-08	RD - 0	8 NOS	AS DRAWN
SALES JOB NO	ROTATION	QUANTITY	REMARKS

ALL DIMENSIONS ARE IN mm. EXCEPT OTHERWISE STATED.

DDN NO.
PATTERN NO.
PATTERN TYPE
PROJECTION
MATERIAL:
S.O. NO.

marathon

Marathon Electric Motors (India) Limited
Paharpur Works, 58 Taratala Road.
Kolkata - 700024 , INDIA

TITLE: GEN, ARRGT. OF 289/7-1600 DI FAN CW, TOP VERTICAL DISCHARGE, ARRGT-3.

DRAWN	B.Majumder		02.02.18
CHECKED	S.BHOWMICK		
APPRVD.	S.Majumder		
SCALE	N.T.S	SIGN	DATE

DRAWING NO. C12.R6.01.00.00.AC6190 REV 01

DRAWING NO.	REV
C12.R6.01.00.00. AC6402	00

REF. DRG. NO.

For General Tolerance,Definition of various Symbols and Instructions refer Drawing No. CP3933/*.
*(Rev. No.) should be taken from online "Drawing Master"

IF IN DOUBT , PLEASE ENQUIRE

These drawing and design are the property of Marathon Electric Motors (India) Limited. These must not be copied or lent to any other party without the written consent of Marathon Electric Motors (India) Limited.

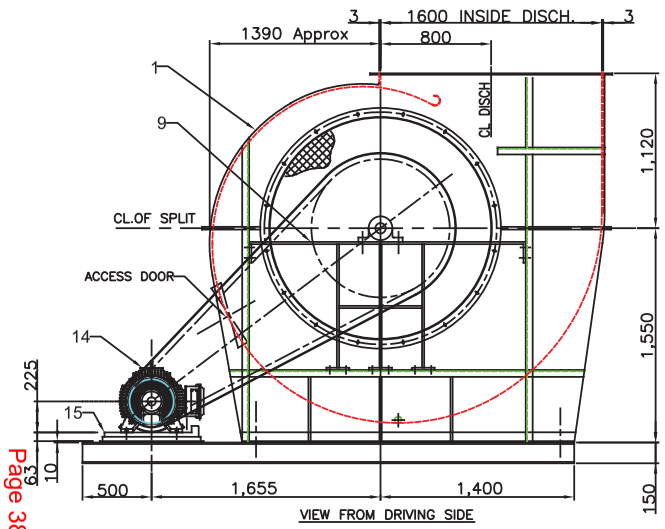

VIEW FROM DRIVING SIDE

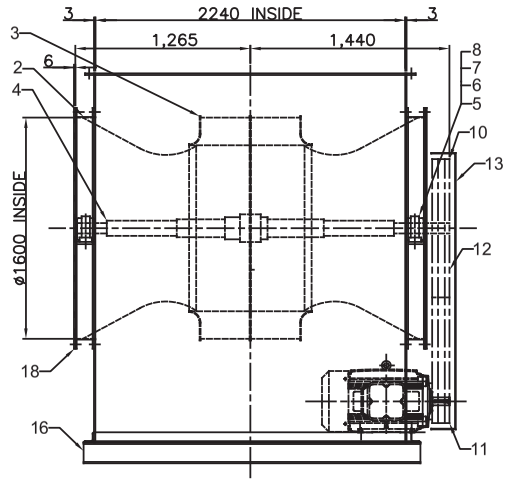

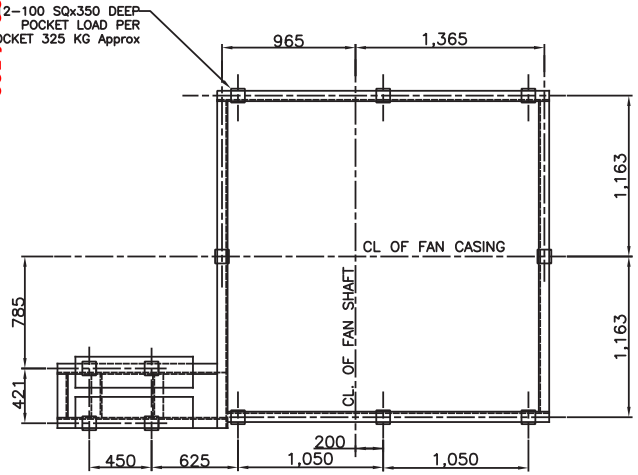

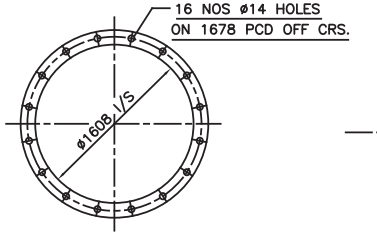

DETAIL OF INLET FLANGE
65X6 FLAT BAR.

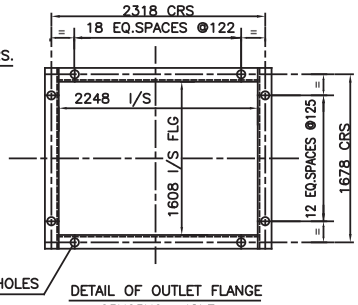

DETAIL OF OUTLET FLANGE
65X65X6 ANGLE

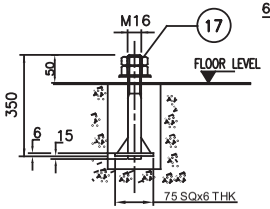

DET. OF FOUNDATION BOLT

SL NO	DESCRIPTION	QTY	MATL	REMARKS
1	CASING,INSP DOOR WITH DRAIN PLUG	1	IS:1079,gr'O' UP TO 3.15 Thk IS:2062,.	SCROLL & SIDE 3 mm
2	INLET CONE	2	IS:1079,gr'O' UP TO 3.15 Thk IS:2062,.	
3	IMPELLER (BACK PL.8 mm,SHROUD 4 mm,BLADE 2 mm)	1	IS:1079,gr'O' UP TO 3.15 Thk IS:2062,.	BLADE AEROFOIL
	IMPELLER HUB	1	IS:2062,	
4	SHAFT WITH TWO KEYS	1	En-8	
5	SPHERICAL ROLLER BEARING 22217EK+H317	2	SKF	
6	LOCATING RING NO 10/150	1	STD.	FOR LOC.BRG. ONLY
7	HOUSING NO : 517	2	IS:210,GR4600	
8	M6 GREASE NIPPLE	2		
9	BEARER BAR ASSY	2	IS:1079,gr'O' UP TO 3.15 Thk IS:2062,.	
10	FAN PULLEY	1	C.I. (IS:210 Gr 20)	
11	MOTOR PULLEY	1	C.I. (IS:210 Gr 20)	
12	V-BELT	1 SET	STD.	MAKE 'FLEXURE'
13	BELT GUARD	1	IS:1079,gr'O' UP TO 3.15 Thk IS:2062,gr'A' 4 Thk & ABOVE	
14	MOTOR : 45 KW4 POLE FR 225M	1	IE-3	
15	SLIDE RAIL 450 CRS	2	IS:210,GR4600	
16	COMMON CHANNEL BASE	1	IS:1079,gr'O' UP TO 3.15 Thk IS:2062,gr'A' 4 Thk & ABOVE	
17	M16x350 LG FOUNDATION BOLT WITH NUT & WASHER	12	IS:1079,gr'O' UP TO 3.15 Thk IS:2062,gr'A' 4 Thk & ABOVE	
18	WIRE MESH GUARD 18 SWG	2	IS:1079,gr'O' UP TO 3.15 Thk IS:2062,gr'A' 4 Thk & ABOVE	

ST. WT : 3900 KG APPROX
DYNAMIC LOAD : 4875 KG APPROX

DUTY PARAMETERS OF FAN	
FAN TYPE	CENTRIFUGAL DIDW
CAPACITY , M3/HR	1,30,000
STATIC PRESSURE mmwg AT 20°C	75
FAN SPEED, RPM	542
SHAFT POWER KW AT 20°C	35
OUTLET VELOCITY M/SEC.	10.08

NOISE LEVEL AT 1 M 85 dBA (IN FREE FIELD COND.)
FAN DYNAMICALLY BALANCED AS PER GR 6.3 ISO:1940.
VIBRATION LEVEL AS PER IS:14817(PART-1),CLASS-IV,LEVEL B

SALES JOB NO	ROTATION	QUANTITY	REMARKS
EC18C14461/09-17	LG - 0	9 NOS	AS DRAWN

ALL DIMENSIONS ARE IN mm. EXCEPT OTHERWISE STATED.

PAINTING :
FAN CASING,IMPELLER& INLET CONE ZINC SPRAYED 50-60 MICRON, OTHERS PAINTED WITH 2 COATS OF PRIMER & 2 COATS OF SYNTHETIC ENAMEL FINISH PAINT OF COLOUR D.A.GREY (SHADE 632 IS:5) TOTAL PAINT THICKNESS 140 MICRON

REV.	DATE	DETAIL OF REVISION	DONE BY	APPRVD	DDN NO.	DCN NO.
01	16.08.18	PERFORMANCE DATA UPDATED.	B.M.	B.M.		

DON NO.
PATTERN NO.
PATTERN TYPE
PROJECTION
MATERIAL:
S.O. NO.

marathon

Marathon Electric Motors (India) Limited
Paharpur Works, 58 Taratala Road.
Kolkata - 700024 , INDIA

TITLE: GEN, ARRGT. OF 289/7-1600 DI FAN
CCW, TOP VERTICAL DISCHARGE, ARRGT-3.

DRAWN	B.Majumder		02.10.18
CHECKED	S.BHOWMICK		
APPRVD.	S.Majumder		
SCALE	N.T.S	SIGN	DATE

DRAWING NO. C12.R6.01.00.00.AC6402 REV 00

TECHNICAL DATA SHEET OF TUBE AXIAL FAN

Project : (4X270 MW) BHADRADRI THERMAL POWER PROJECT	Project : (4X270 MW) BHADRADRI THERMAL POWER PROJECT
Package : VENTILATION SYSTEM	Main Contractor : BHEL
Document No : PE-VO-411-654-A203	Contractor
Rev No : 03	Issue : 03

SL No	DESCRIPTION	TECHNICAL DATA	TECHNICAL DATA	TECHNICAL DATA	TECHNICAL DATA	TECHNICAL DATA	TECHNICAL DATA	TECHNICAL DATA	TECHNICAL DATA	TECHNICAL DATA	TECHNICAL DATA	TECHNICAL DATA
1	Location	As Per Approved Ventilation Fan Schedule										
2	Application	Exhaust Air Fan	Exhaust Air Fan	Exhaust Air Fan	Supply Air Fan	Supply Air Fan	Supply Air Fan	Supply Air Fan	Supply Air Fan	Supply Air Fan	Supply Air Fan	Supply Air Fan
3	Manufacturer	MARATHON Electric Motors (India) Limited										
4	Model No.	RE48J1/2/5K5-P6	RE38J/5K5-P6	RE36J1/2/2K2-P6	30J/2K2-P4	30J/1K5-P4	30J/1K1-P4	30J2/3/1K1-P4	38J/2K2-P6	36J/1K5-P6	36J/1K1-P6	36J/1K1-P6
5	Fan Type	Roof Exhaust (Tube Axial)	Roof Exhaust (Tube Axial)	Roof Exhaust (Tube Axial)	Tube Axial	Tube Axial	Tube Axial	Tube Axial	Tube Axial	Tube Axial	Tube Axial	Tube Axial
6	Specific Weight of Air at Temp.	1.2 kg/M3 at 20°c	1.2 kg/M3 at 20°c	1.2 kg/M3 at 20°c	1.2 kg/M3 at 20°c	1.2 kg/M3 at 20°c	1.2 kg/M3 at 20°c	1.2 kg/M3 at 20°c	1.2 kg/M3 at 20°c	1.2 kg/M3 at 20°c	1.2 kg/M3 at 20°c	1.2 kg/M3 at 20°c
7	Selected Capacity	50,000 M3/hr	40,000 M3/hr	20,000 M3/hr	10,000 M3/hr	7,500 M3/hr	6,000 M3/hr	4,000 M3/hr	10,000 M3/hr	7,500 M3/hr	6,000 M3/hr	4,000 M3/hr
8	Static Pressure at 20°c	15 mmwg	15 mmwg	15 mmwg	30 mmwg	30 mmwg	30 mmwg	30 mmwg	20 mmwg	20 mmwg	20 mmwg	20 mmwg
9	Total Pressure at 20°c	23.60 mmwg	29.04 mmwg	19.33 mmwg	32.25 mmwg	31.27 mmwg	30.81 mmwg	30.36 mmwg	20.88 mmwg	20.61 mmwg	20.39 mmwg	20.17 mmwg
9A	Static Pressure at 50°c	13.61 mmwg	13.61 mmwg	13.61 mmwg	27.21 mmwg	27.21 mmwg	27.21 mmwg	27.21 mmwg	18.14 mmwg	18.14 mmwg	18.14 mmwg	18.14 mmwg
9B	Total Pressure at 50°c	21.41 mmwg	26.34 mmwg	17.53 mmwg	29.25 mmwg	28.37 mmwg	27.95 mmwg	27.54 mmwg	18.94 mmwg	18.70 mmwg	18.50 mmwg	18.30 mmwg
10	Impeller Speed	960 rpm	960 rpm	960 rpm	1450 rpm	1450 rpm	1450 rpm	1450 rpm	960 rpm	960 rpm	960 rpm	960 rpm
11	Shaft Power at operating speed at 20°c	4.60 kw	4.72 kw	1.50 kw	1.60 kw	1.25 kw	0.90 kw	0.80 kw	1.30 kw	1.10 kw	0.90 kw	0.80 kw
11A	Shaft Power at operating speed at 50°c	4.17 kw	4.28 kw	1.36 kw	1.45 kw	1.13 kw	0.82 kw	0.73 kw	1.18 kw	1.0 kw	0.82 kw	0.73 kw
12	Fan Static Efficiency	44.40%	34.62%	54.47%	51.06%	49.02%	54.47%	40.85%	41.90%	37.14%	36.31%	27.23%
13	Fan Total Efficiency	69.86%	67.02%	70.19%	54.89%	51.09%	55.94%	41.34%	43.74%	38.27%	37.02%	27.46%
14	Critical Speed	1250 rpm	1250 rpm	1250 rpm	1890 rpm	1890 rpm	1890 rpm	1890 rpm	1250 rpm	1250 rpm	1250 rpm	1250 rpm
15	Bearings											
16	a) Make & Type	SKF / FAG / NTN / Ball	SKF / FAG / NTN / Ball	SKF / FAG / NTN / Ball	SKF / FAG / NTN / Ball	SKF / FAG / NTN / Ball	SKF / FAG / NTN / Ball	SKF / FAG / NTN / Ball	SKF / FAG / NTN / Ball	SKF / FAG / NTN / Ball	SKF / FAG / NTN / Ball	SKF / FAG / NTN / Ball
17	b) Manufacturer's designation	Refer Motor Data Sheet	Refer Motor Data Sheet	Refer Motor Data Sheet	Refer Motor Data Sheet	Refer Motor Data Sheet	Refer Motor Data Sheet	Refer Motor Data Sheet	Refer Motor Data Sheet	Refer Motor Data Sheet	Refer Motor Data Sheet	Refer Motor Data Sheet
18	Static Weight of Fan-Motor Assembly	750 kg approx	550 kg approx	550 kg approx	145 kg approx	130 kg approx	120 kg approx	120 kg approx	216 kg approx	190 kg approx	176 kg approx	176 kg approx
19	Dynamic Weight of Fan-Motor Assembly	950 kg approx	690 kg approx	690 kg approx	180 kg approx	165 kg approx	150 kg approx	150 kg approx	270 kg approx	247 kg approx	220 kg approx	220 kg approx
20	Performance curve enclosed (Yes/No)	-Yes-	-Yes-	-Yes-	-Yes-	-Yes-	-Yes-	-Yes-	-Yes-	-Yes-	-Yes-	-Yes-
21	Motor Data											
22	Motor Rating at 50°c	5.5 kw 6 pole	5.5 kw 6 pole	2.2 kw 6 pole	2.2 kw 4 pole	1.5 kw 4 pole	1.1 kw 4 pole	1.1 kw 4 pole	2.2 kw 6 pole	1.5 kw 6 pole	1.1 kw 6 pole	1.1 kw 6 pole
23	Motor Type	IE-3	IE-3	IE-3	IE-3	IE-3	IE-3	IE-3	IE-3	IE-3	IE-3	IE-3
24	Motor Method of mounting	Foot Mounted	Foot Mounted	Foot Mounted	Foot Mounted	Foot Mounted	Foot Mounted	Foot Mounted	Foot Mounted	Foot Mounted	Foot Mounted	Foot Mounted
25	Direction of rotation	Clockwise (Viewed from DE)	Clockwise (Viewed from DE)	Clockwise (Viewed from DE)	Clockwise (Viewed from DE)	Clockwise (Viewed from DE)	Clockwise (Viewed from DE)	Clockwise (Viewed from DE)	Clockwise (Viewed from DE)	Clockwise (Viewed from DE)	Clockwise (Viewed from DE)	Clockwise (Viewed from DE)
26	d) GD² of load referred to motor shaft	5.51 kg m2	4.36 kg m2	1.85 kg m2	1.64 kg m2	1.64 kg m2	1.64 kg m2	1.12 kg m2	4.36 kg m2	3.53 kg m2	3.53 kg m2	3.53 kg m2
27	Material / Thickness											
28	a) Impeller	LM-6, BS:1490 / Aerofoil	LM-6, BS:1490 / Aerofoil	LM-6, BS:1490 / Aerofoil	LM-6, BS:1490 / Aerofoil	LM-6, BS:1490 / Aerofoil	LM-6, BS:1490 / Aerofoil	LM-6, BS:1490 / Aerofoil	LM-6, BS:1490 / Aerofoil	LM-6, BS:1490 / Aerofoil	LM-6, BS:1490 / Aerofoil	LM-6, BS:1490 / Aerofoil
29	b) Casing	IS:2062 gr 'B' / 5 mm Thick Zinc Sprayed	IS:2062 gr 'B' / 5 mm Thick Zinc Sprayed	IS:2062 gr 'B' / 5 mm Thick Zinc Sprayed	IS:1079 gr 'O' / 3.15 mm Thick	IS:1079 gr 'O' / 3.15 mm Thick	IS:1079 gr 'O' / 3.15 mm Thick	IS:1079 gr 'O' / 3.15 mm Thick	IS:2062 gr 'B' / 5 mm Thick	IS:2062 gr 'B' / 5 mm Thick	IS:2062 gr 'B' / 5 mm Thick	IS:2062 gr 'B' / 5 mm Thick
30	Quantity	As Per Approved Fan Schedule	As Per Approved Fan Schedule	As Per Approved Fan Schedule	As Per Approved Fan Schedule	As Per Approved Fan Schedule	As Per Approved Fan Schedule	As Per Approved Fan Schedule	As Per Approved Fan Schedule	As Per Approved Fan Schedule	As Per Approved Fan Schedule	As Per Approved Fan Schedule
31	Impeller Diameter	1210 mm	960 mm	910 mm	750 mm	750 mm	750 mm	750 mm	960 mm	910 mm	910 mm	910 mm
32	Painting Spec. of fan	Ref. G.A. Drawing	Ref. G.A. Drawing	Ref. G.A. Drawing	Ref. G.A. Drawing	Ref. G.A. Drawing	Ref. G.A. Drawing	Ref. G.A. Drawing	Ref. G.A. Drawing	Ref. G.A. Drawing	Ref. G.A. Drawing	Ref. G.A. Drawing
33	Noise Level	Ref. G.A. Drawing	Ref. G.A. Drawing	Ref. G.A. Drawing	Ref. G.A. Drawing	Ref. G.A. Drawing	Ref. G.A. Drawing	Ref. G.A. Drawing	Ref. G.A. Drawing	Ref. G.A. Drawing	Ref. G.A. Drawing	Ref. G.A. Drawing
34	Vibration Level	Ref. G.A. Drawing	Ref. G.A. Drawing	Ref. G.A. Drawing	Ref. G.A. Drawing	Ref. G.A. Drawing	Ref. G.A. Drawing	Ref. G.A. Drawing	Ref. G.A. Drawing	Ref. G.A. Drawing	Ref. G.A. Drawing	Ref. G.A. Drawing
35	No.of Blade	5 nos	10 nos	5 nos	9 nos	9 nos	9 nos	6 nos	10 nos	10 nos	10 nos	10 nos
36	Inspection & Testing	As Per Approved QAP	As Per Approved QAP	As Per Approved QAP	As Per Approved QAP	As Per Approved QAP	As Per Approved QAP	As Per Approved QAP	As Per Approved QAP	As Per Approved QAP	As Per Approved QAP	As Per Approved QAP
37	Accessories Included in Marathon Scope	Hood & Bottom Plate	Hood & Bottom Plate	Hood & Bottom Plate	-Nil-	-Nil-	-Nil-	-Nil-	-Nil-	-Nil-	-Nil-	-Nil-

SL No	DESCRIPTION	TECHNICAL DATA	TECHNICAL DATA	TECHNICAL DATA	TECHNICAL DATA	TECHNICAL DATA	TECHNICAL DATA	TECHNICAL DATA	TECHNICAL DATA	TECHNICAL DATA	TECHNICAL DATA	TECHNICAL DATA
1	Location											
2	Application	Exhaust Air Fan	Exhaust Air Fan	Exhaust Air Fan	Exhaust Air Fan	Exhaust Air Fan	Exhaust Air Fan	Exhaust Air Fan	Exhaust Air Fan	Exhaust Air Fan	Exhaust Air Fan	Exhaust Air Fan
3	Manufacturer											
4	Model No.	FE30J/2K2-P6	FE30J/1K1-P6	FE30J/1K1-P6	FE30J/K75-P6	FE30J/K55-P6	30J/1K1-P6	30J/K75-P6	24J/K55-P6	24J/K55-P6	18J/K37-P4	18J/K37-P4
5	Fan Type	Tube Axial, (Sparkproof)	Tube Axial, (Sparkproof)	Tube Axial, (Sparkproof)	Tube Axial, (Sparkproof)	Tube Axial, (Sparkproof)	Tube Axial	Tube Axial	Tube Axial	Tube Axial	Tube Axial	Tube Axial
6	Specific Weight of Air at Temp.	1.2 kg/M3 at 20°c	1.2 kg/M3 at 20°c	1.2 kg/M3 at 20°c	1.2 kg/M3 at 20°c	1.2 kg/M3 at 20°c	1.2 kg/M3 at 20°c	1.2 kg/M3 at 20°c	1.2 kg/M3 at 20°c	1.2 kg/M3 at 20°c	1.2 kg/M3 at 20°c	1.2 kg/M3 at 20°c
7	Selected Capacity	15,000 M3/hr	10,000 M3/hr	7,500 M3/hr	4,000 M3/hr	2,000 M3/hr	15,000 M3/hr	10,000 M3/hr	7,500 M3/hr	6,000 M3/hr	4,000 M3/hr	2,000 M3/hr
8	Static Pressure at 20°c	15 mmwg	15 mmwg	15 mmwg	15 mmwg	15 mmwg	10 mmwg	10 mmwg	10 mmwg	10 mmwg	10 mmwg	10 mmwg
9	Total Pressure at 20°c	20.07 mmwg	17.25 mmwg	16.27 mmwg	15.36 mmwg	15.09 mmwg	15.07 mmwg	12.25 mmwg	13.09 mmwg	11.98 mmwg	12.79 mmwg	10.70 mmwg
9A	Static Pressure at 50°c	13.61 mmwg	13.61 mmwg	13.61 mmwg	13.61 mmwg	13.61 mmwg	9.07 mmwg	9.07 mmwg	9.07 mmwg	9.07 mmwg	9.07 mmwg	9.07 mmwg
9B	Total Pressure at 50°c	18.21 mmwg	15.65 mmwg	14.76 mmwg	13.93 mmwg	13.69 mmwg	13.67 mmwg	11.11 mmwg	11.87 mmwg	10.87 mmwg	11.60 mmwg	9.71 mmwg
10	Impeller Speed	940 rpm	940 rpm	940 rpm	940 rpm	940 rpm	940 rpm	940 rpm	940 rpm	940 rpm	1440 rpm	1440 rpm
11	Shaft Power at operating speed at 20°c	1.40 kw	0.95 kw	0.75 kw	0.50 kw	0.40 kw	0.92 kw	0.61 kw	0.44 kw	0.38 kw	0.22 kw	0.19 kw
11A	Shaft Power at operating speed at 50°c	1.27 kw	0.86 kw	0.68 kw	0.45 kw	0.36 kw	0.83 kw	0.55 kw	0.40 kw	0.34 kw	0.20 kw	0.17 kw
12	Fan Static Efficiency	43.77%	43.00%	40.85%	32.68%	20.42%	44.40%	44.64%	46.42%	43.00%	49.51%	28.67%
13	Fan Total Efficiency	58.56%	49.45%	44.31%	33.46%	20.55%	66.91%	54.69%	60.76%	51.51%	63.33%	30.67%
14	Critical Speed	1250 rpm	1250 rpm	1250 rpm	1250 rpm	1250 rpm	1250 rpm	1250 rpm	1250 rpm	1250 rpm	1875 rpm	1875 rpm
15	Bearings											
16	a) Make & Type	SKF / FAG / NTN / Ball	SKF / FAG / NTN / Ball	SKF / FAG / NTN / Ball	SKF / FAG / NTN / Ball	SKF / FAG / NTN / Ball	SKF / FAG / NTN / Ball	SKF / FAG / NTN / Ball	SKF / FAG / NTN / Ball	SKF / FAG / NTN / Ball	SKF / FAG / NTN / Ball	SKF / FAG / NTN / Ball
17	b) Manufacturer's designation	Refer Motor Data Sheet	Refer Motor Data Sheet	Refer Motor Data Sheet	Refer Motor Data Sheet	Refer Motor Data Sheet	Refer Motor Data Sheet	Refer Motor Data Sheet	Refer Motor Data Sheet	Refer Motor Data Sheet	Refer Motor Data Sheet	Refer Motor Data Sheet
18	Static Weight of Fan-Motor Assembly	200 kg approx	150 kg approx	150 kg approx	150 kg approx	135 kg approx	120 kg approx	115 kg approx	70 kg approx	70 kg approx	60 kg approx	60 kg approx
19	Dynamic Weight of Fan-Motor Assembly	250 kg approx	190 kg approx	190 kg approx	190 kg approx	170 kg approx	150 kg approx	144 kg approx	88 kg approx	88 kg approx	76 kg approx	76 kg approx
20	Performance curve enclosed (Yes/No)	-Yes-	-Yes-	-Yes-	-Yes-	-Yes-	-Yes-	-Yes-	-Yes-	-Yes-	-Yes-	-Yes-
21	Motor Data											
22	Motor Rating at 50°c	2.2 kw 6 pole FLP	1.1 kw 6 pole FLP	1.1 kw 6 pole FLP	0.75 kw 6 pole FLP	0.55 kw 6 pole FLP	1.1 kw 6 pole	0.75 kw 6 pole	0.55 kw 6 pole	0.55 kw 6 pole	0.37 kw 4 pole	0.37 kw 4 pole
23	Motor Type	IE-3	IE-3	IE-3	IE-3	IE-3	IE-3	IE-3	IE-3	IE-3	IE-3	IE-3
24	Motor Method of mounting	Foot Mounted	Foot Mounted	Foot Mounted	Foot Mounted	Foot Mounted	Foot Mounted	Foot Mounted	Foot Mounted	Foot Mounted	Foot Mounted	Foot Mounted
25	Direction of rotation	Clockwise (Viewed from DE)	Clockwise (Viewed from DE)	Clockwise (Viewed from DE)	Clockwise (Viewed from DE)	Clockwise (Viewed from DE)	Clockwise (Viewed from DE)	Clockwise (Viewed from DE)	Clockwise (Viewed from DE)	Clockwise (Viewed from DE)	Clockwise (Viewed from DE)	Clockwise (Viewed from DE)
26	d) GD² of load referred to motor shaft	1.64 kg m2	1.64 kg m2	1.64 kg m2	1.64 kg m2	1.64 kg m2	1.64 kg m2	1.64 kg m2	0.53 kg m2	0.53 kg m2	0.11 kg m2	0.11 kg m2
27	Material / Thickness											
28	a) Impeller	LM-6, BS:1490 / Aerofoil	LM-6, BS:1490 / Aerofoil	LM-6, BS:1490 / Aerofoil	LM-6, BS:1490 / Aerofoil	LM-6, BS:1490 / Aerofoil	LM-6, BS:1490 / Aerofoil	LM-6, BS:1490 / Aerofoil	LM-6, BS:1490 / Aerofoil	LM-6, BS:1490 / Aerofoil	LM-6, BS:1490 / Aerofoil	LM-6, BS:1490 / Aerofoil
29	b) Casing	IS:1079 gr 'O' / 3.15 mm Thick	IS:1079 gr 'O' / 3.15 mm Thick	IS:1079 gr 'O' / 3.15 mm Thick	IS:1079 gr 'O' / 3.15 mm Thick	IS:1079 gr 'O' / 3.15 mm Thick	IS:1079 gr 'O' / 3.15 mm Thick	IS:1079 gr 'O' / 3.15 mm Thick	IS:1079 gr 'O' / 3.15 mm Thick	IS:1079 gr 'O' / 3.15 mm Thick	IS:1079 gr 'O' / 3.15 mm Thick	IS:1079 gr 'O' / 3.15 mm Thick
30	Quantity	As Per Approved Fan Schedule	As Per Approved Fan Schedule	As Per Approved Fan Schedule	As Per Approved Fan Schedule	As Per Approved Fan Schedule	As Per Approved Fan Schedule	As Per Approved Fan Schedule	As Per Approved Fan Schedule	As Per Approved Fan Schedule	As Per Approved Fan Schedule	As Per Approved Fan Schedule
31	Impeller Diameter	750 mm	750 mm	750 mm	750 mm	750 mm	750 mm	750 mm	605 mm	605 mm	450 mm	450 mm
32	Painting Spec. of fan	Ref. G.A. Drawing	Ref. G.A. Drawing	Ref. G.A. Drawing	Ref. G.A. Drawing	Ref. G.A. Drawing	Ref. G.A. Drawing	Ref. G.A. Drawing	Ref. G.A. Drawing	Ref. G.A. Drawing	Ref. G.A. Drawing	Ref. G.A. Drawing
33	Noise Level	Ref. G.A. Drawing	Ref. G.A. Drawing	Ref. G.A. Drawing	Ref. G.A. Drawing	Ref. G.A. Drawing	Ref. G.A. Drawing	Ref. G.A. Drawing	Ref. G.A. Drawing	Ref. G.A. Drawing	Ref. G.A. Drawing	Ref. G.A. Drawing
34	Vibration Level	Ref. G.A. Drawing	Ref. G.A. Drawing	Ref. G.A. Drawing	Ref. G.A. Drawing	Ref. G.A. Drawing	Ref. G.A. Drawing	Ref. G.A. Drawing	Ref. G.A. Drawing	Ref. G.A. Drawing	Ref. G.A. Drawing	Ref. G.A. Drawing
35	No.of Blade	9 nos	9 nos	9 nos	9 nos	9 nos	9 nos	9 nos	9 nos	9 nos	7 nos	7 nos
36	Inspection & Testing	As Per Approved QAP	As Per Approved QAP	As Per Approved QAP	As Per Approved QAP	As Per Approved QAP	As Per Approved QAP	As Per Approved QAP	As Per Approved QAP	As Per Approved QAP	As Per Approved QAP	As Per Approved QAP
37	Accessories Included in Marathon Scope	-Nil-	-Nil-	-Nil-	-Nil-	-Nil-	-Nil-	-Nil-	-Nil-	-Nil-	-Nil-	-Nil-

NOTE:

Axial fans shall be designed as per IS 3588

Testing as per approved QAP. FAN DYNAMICALLY BALANCED AS PER GR. 6.3, ISO:1940.

SP for Fine Filters-18 MMWC & Prefilters 7 MM WC, So total SP we have considered 30 MM WC

DRAWING NO.	REV
C12.R6.01.48.00. AC6391	01

REF. DRG. NO.

For General Tolerance,Definition of various Symbols and Instructions refer Drawing No. CP3933/*.
*(Rev. No.) should be taken from online "Drawing Master"

IF IN DOUBT , PLEASE ENQUIRE

These drawing and design are the property of Marathon Electric Motors (India) Limited. These must not be copied or lent to any other party without the written consent of Marathon Electric Motors (India) Limited.

LOCATION	MODEL	FAN SIZE	TYPE & FRAME OF MOTOR	RATING (KW/P)	FLOW (M3/HR)	STATIC PRESSURE mmwg AT 20°C	SPEED (RPM)	BKW at 20°c	SALES JOB REF.
	RE 48J1/2/5K5-P6	1210	TEFC,SQ CAGE FOOT MTD. 132M	5.5 KW 6-POLE	50,000	15	960	4.60	EC18A14463

STATIC WT OF FAN ASSY. = 750 KG APPROX

DYNAMIC WT. OF FAN ASSY. = 950 KG APPROX

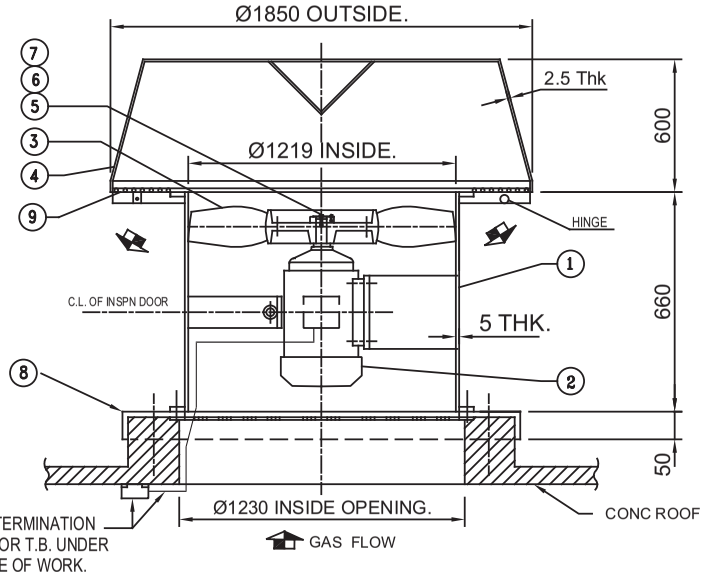

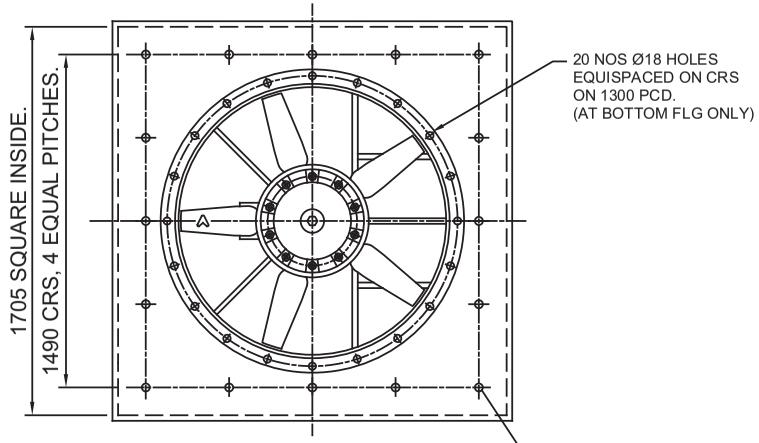

PLAN (HOOD REMOVED).

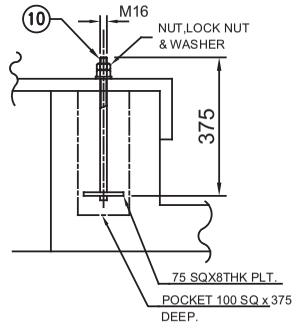

RECOMMENDED FIXING ARRGT.

NOTES -

1. POWER SUPPLY.
   415 V , 3 PH, 50 HZ , AC .
2. MOTOR CLASS OF INSULATION : 'F' (Temp.Rise Limit Class 'B').
3. MOTOR DEGREE OF PROTECTION : IP-55.
4. MOTOR AMB. TEMP. = 50°C.
5. MOTORS ARE IE - 3 AS PER IS: 12615
6. PAINTING SPECIFICATION
   2 COATS
   RED OXIDE PRIMER OF THICKNESS 35 MICRON FOLLOWED UP WITH 2 COATS OF SYNTHETIC ENAMEL FINISH PAINT WITH 35 MICRON THICKNESS OF EACH COAT SHALL BE APPLIED.
   FINISH PAINT OF COLOUR D.A. GREY (SHADE 632 OF IS:5) .
   TOTAL PAINT THICKNESS DFT 140 Micron APPROX.
7. FAN DYNAMICALLY BALANCED AS PER GR. 6.3, ISO:1940.
8. VIBRATION LIMIT AS PER IS:14817 (PART-1), CLASS IV, LEVEL B.
9. NOISE LEVEL 85 dBA AT 1.5 M (IN FREE FIELD COND.).

SL.NO	DESCRIPTION	QTY	MATL.	REMARKS
10	BOLT M16x250 WITH NUT & WASHER	16	2062 gr'A'	BY STERLING
9	BIRD SCREEN 25 SQ.MESH	1	2062 gr'A'	
8	BOTTOM PLATE 6 THK WITH SCREEN	1	2062 gr'A'	25 SQ. MESH
7	LOCKING SCREW (at center)	1	IS:1367	
6	LOCKING WASHER.	1	IS:4072	
5	LOCKING PLATE.	1	2062 gr'A'	
4	H O O D 5 THK	1	2062 gr'A'	
3	IMPELLER (AEROFOIL).	1	LM-6,BS:1490	DIE-CAST
2	MOTOR.	1	STD. IE-3	
1	FAN CASING 5 THK	1	2062 gr'A'	ZINC SPRAYED

ALL DIMENSIONS ARE IN mm.

REV.	DATE	DETAIL OF REVISION	DONE BY	APPRVD	DDN NO.	DCN NO.
01	06.11.18	COMMENT'S INCORPORATED.	B.M.	B.M.		

CIVIL/STRUCTURAL/ERECTION/COMMISIONING & DETAIL OF FOUNDATION UNDER STERLING'S SCOPE

DDN NO.
PATTERN NO.
PATTERN TYPE
PROJECTION
MATERIAL:
S.O. NO.

marathon

Marathon Electric Motors (India) Limited
Paharpur Works, 58 Taratala Road.
Kolkata - 700024 , INDIA

TITLE

G.A OF ROOF EXTRACTOR

M O D E L : RE 48J1/2/5K5-P6

DRAWN	B.Majumder		01.10.18
CHECKED	S.BHOWMICK		
APPRVD.	D. Chacraborty		01.10.18
SCALE	N.T.S	SIGN	DATE

DRAWING NO. C12. R6. 01. 48. 00. AC6391

REV 01

DRAWING NO.	REV
C12.R6.01.38.00. AC6392	00

REF. DRG. NO.

For General Tolerance,Definition of various Symbols and Instructions refer Drawing No. CP3933/*.
*(Rev. No.) should be taken from online "Drawing Master"

IF IN DOUBT , PLEASE ENQUIRE

These drawing and design are the property of Marathon Electric Motors (India) Limited. These must not be copied or lent to any other party without the written consent of Marathon Electric Motors (India) Limited.

LOCATION	MODEL	FAN SIZE	TYPE & FRAME OF MOTOR	RATING (KW/P)	FLOW (M3/HR)	STATIC PRESSURE mmwg AT 20°C	SPEED (RPM)	BKW at 20°c		SALES JOB REF.
	RE 38J/5K5-P6	960	TEFC,SQ CAGE FOOT MTD. 132M	5.5 KW 6-POLE	40,000	15	960	4.72		EC18A14464/01-10

STATIC WT OF FAN ASSY. = 550 KG APPROX

DYNAMIC WT. OF FAN ASSY. = 690 KG APPROX

NOTES -
1. POWER SUPPLY.
   415 V , 3 PH, 50 HZ , AC .
2. MOTOR CLASS OF INSULATION : 'F' (Temp.Rise Limit Class 'B').
3. MOTOR DEGREE OF PROTECTION : IP-55.
4. MOTOR AMB. TEMP. = 50°C.
5. MOTORS ARE IE - 3 AS PER IS: 12615
6. PAINTING SPECIFICATION
   2 COATS
   RED OXIDE PRIMER OF THICKNESS 35 MICRON FOLLOWED UP WITH 2 COATS OF SYNTHETIC ENAMEL FINISH PAINT WITH 35 MICRON THICKNESS OF EACH COAT SHALL BE APPLIED.
   FINISH PAINT OF COLOUR D.A. GREY (SHADE 632 OF IS:5) .
   TOTAL PAINT THICKNESS DFT 140 Micron APPROX.
7. FAN DYNAMICALLY BALANCED AS PER GR. 6.3, ISO:1940.
8. VIBRATION LIMIT AS PER IS:14817 (PART-1), CLASS-IV, LEVEL-B.
9. NOISE LEVEL 85 dBA AT 1.5 M (IN FREE FIELD COND.).

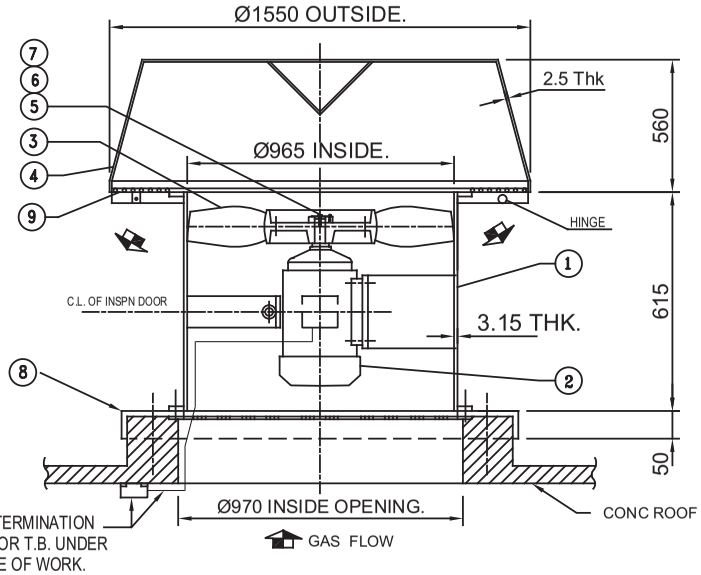

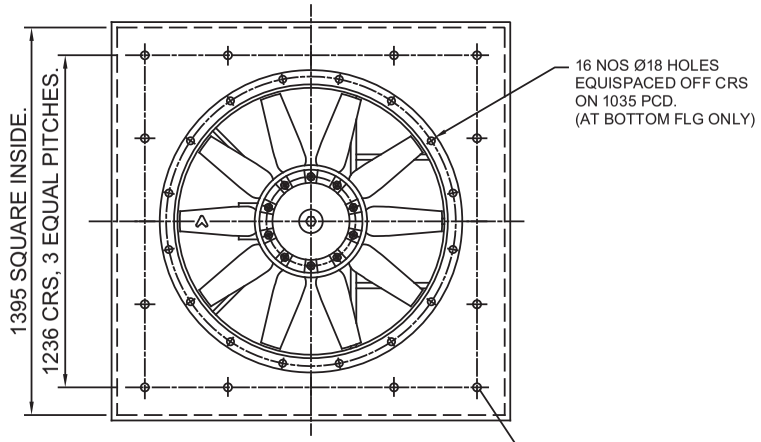

PLAN (HOOD REMOVED).

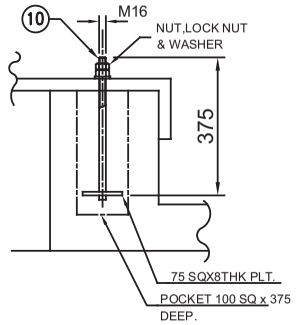

RECOMMENDED FIXING ARRGT.

SL.NO	DESCRIPTION	QTY	MATL.	REMARKS
10	BOLT M16x250 WITH NUT & WASHER	16	2062gr'A'	BY STERLING
9	BIRD SCREEN 25 SQ.MESH	1	2062gr'A'	
8	BOTTOM PLATE 5 THK WITH SCREEN	1	2062gr'A'	25 SQ. MESH
7	LOCKING SCREW (at center)	1	IS:1367	
6	LOCKING WASHER.	1	IS:4072	
5	LOCKING PLATE.	1	2062gr'A'	
4	H O O D 5 THK	1	2062 gr'A'	
3	IMPELLER (AEROFOIL).	1	LM-6,BS:1490	DIE-CAST
2	MOTOR.	1	STD. IE-3	
1	FAN CASING 5 THK	1	2062gr'A'	

REV.	DATE	DETAIL OF REVISION	DONE BY	APPRVD	DDN NO.	DCN NO.

ALL DIMENSIONS ARE IN mm.

CIVIL/STRUCTURAL/ERECTION/COMMISIONING & DETAIL OF FOUNDATION UNDER STERLING'S SCOPE

DDN NO.
PATTERN NO.
PATTERN TYPE
PROJECTION
MATERIAL:
S.O. NO.

marathon

Marathon Electric Motors (India) Limited
Paharpur Works, 58 Taratala Road.
Kolkata - 700024 , INDIA

TITLE

G.A OF ROOF EXTRACTOR

M O D E L : RE 38J/5K5-P6

DRAWN	B.Majumder		01.10.18
CHECKED	S.BHOWMICK		
APPRVD.	D. Chacraborty		01.10.18
SCALE	N.T.S	SIGN	DATE

DRAWING NO. C12. R6. 01. 38. 00. AC6392 REV 00

REV	DRAWING NO.	REF. DRG. NO.	For General Tolerance,Definition of various Symbols and Instructions refer Drawing No. CP3933/*. *(Rev. No.) should be taken from online "Drawing Master"	IF IN DOUBT , PLEASE ENQUIRE	These drawing and design are the property of Marathon Electric Motors (India) Limited. These must not be copied or lent to any other party without the written consent of Marathon Electric Motors (India) Limited.
00	C12.R6.01.38.00. AC6393				

LOCATION	MODEL	FAN SIZE	TYPE & FRAME OF MOTOR	RATING (KW/P)	FLOW (M3/HR)	STATIC PRESSURE mmwg AT 20°C	SPEED (RPM)	BKW AT 20°C		SALES JOB REF.
	RE 36J1/2/2K2-P6	910	TEFC,SQ CAGE FOOT MTD., 112M	2.2 KW 6-POLE	20,000	15	960	1.50		EC18A14465/01-28

STATIC WEIGHT OF FAN ASSY. = 550 KG APPROX.

DYNAMIC WEIGHT OF FAN ASSY. = 690 KG APPROX.

NOTES -

1. POWER SUPPLY.
   415 V , 3 PH, 50 HZ , AC .
2. MOTOR CLASS OF INSULATION : 'F' (Temp.Rise Limit Class 'B').
3. MOTOR DEGREE OF PROTECTION : IP-55.
4. MOTOR AMB. TEMP. = 50°C.
5. MOTORS ARE IE-3, AS PER IS:12615.
6. PAINTING SPECIFICATION .

   2 COATS OF RED OXIDE PRIMER OF THICKNESS 35 MICRON FOLLOWED UP WITH 2 COATS OF OF SYNTHETIC ENAMEL FINISH PAINT WITH 35 MICRON THICKNESS OF ECH COAT SHALL BE APPLIED. COLOUR SHADE 632 OF IS:5
   TOTAL PAINT THICKNESS DFT 140 MICRON APPROX.
7. NOISE LEVEL OF FAN 85 dBA AT 1.5 M (IN FREE FIELD COND.).
8. FAN DYNAMICALLY BALANCED AS PER GR.6.3,ISO:1940.
9. VIBRATION LIMIT AS PER IS:14817 (PART-1), CLASS-IV, LEVEL B.

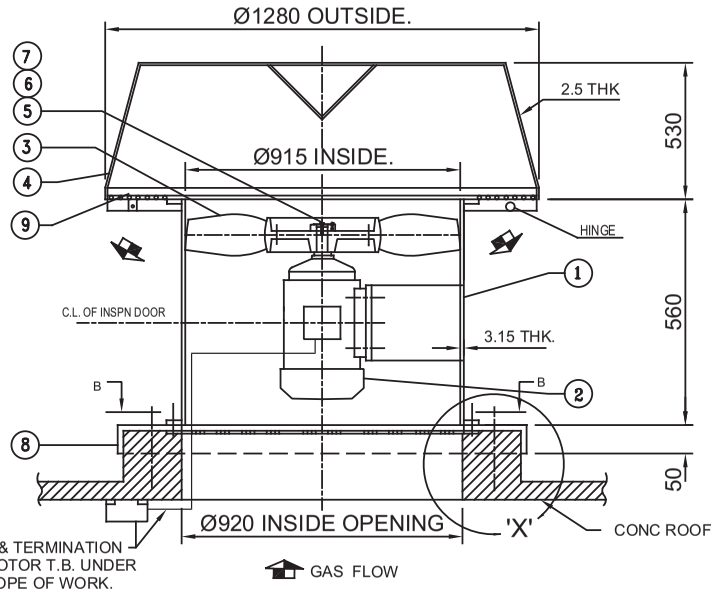

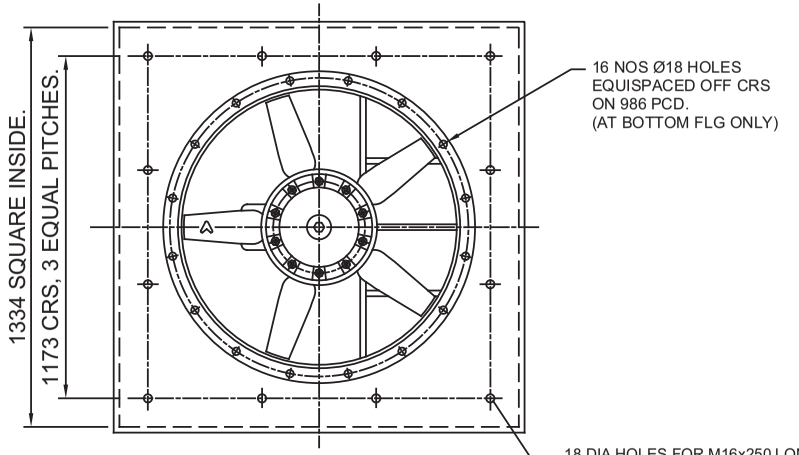

PLAN (HOOD REMOVED).

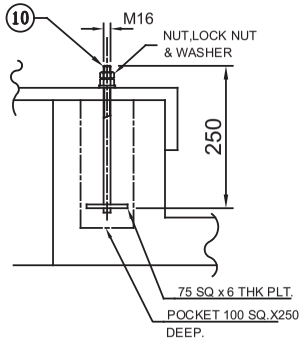

RECOMMENDED FIXING ARRGT.
(ENLARGED VIEW 'X')

SL.NO	DESCRIPTION	QTY	MATL.	REMARKS
10	BOLT M16x250 WITH NUT & WASHER	12	2062gr'A'	BY STERLING
9	BIRD SCREEN 25 SQ.	1	2062gr'A'	
8	BOTTOM PLATE 5 THK WITH SCREEN	1	2062gr'A'	25 SQ.MESH
7	LOCKING SCREW (at center)	1	IS:1367	
6	LOCKING WASHER.	1	IS:4072	
5	LOCKING PLATE.	1	2062gr'A'	
4	H O O D 5 THK (MM)	1	2062 gr'A'	
3	IMPELLER (AEROFOIL)	1	LM-6,BS:1490	ALU. DIE-CAST
2	MOTOR	1	STD. IE-3	
1	FAN CASING 5 THK	1	2062gr'A'	

ALL DIMENSIONS ARE IN mm.

CIVIL/STRUCTURAL/ERECTION/COMMISIONING & DETAIL OF FOUNDATION UNDER STERLING'S SCOPE

REV.	DATE	DETAIL OF REVISION	DONE BY	APPRVD	DDN NO.	DCN NO.

DDN NO. C12DD0000
PATTERN NO.
PATTERN TYPE
PROJECTION
MATERIAL:
S.O. NO.

marathon

Marathon Electric Motors (India) Limited
Paharpur Works, 58 Taratala Road.
Kolkata - 700024, INDIA

TITLE: G.A OF ROOF EXTRACTOR
M O D E L : RE 36J1/2/2K2-P6

DRAWN	B.Majumder		01.10.18
CHECKED	S.Bhowmick		
APPRVD.	S.Majumder		01.10.18
SCALE	N.T.S	SIGN	DATE

DRAWING NO. C12.R6.01.36.00. AC6393 REV 00

REV	DRAWING NO.	REF. DRG. NO.	For General Tolerance,Definition of various Symbols and Instructions refer Drawing No. CP3933/*. *(Rev. No.) should be taken from online "Drawing Master"	IF IN DOUBT , PLEASE ENQUIRE	These drawing and design are the property of Marathon Electric Motors (India) Limited. These must not be copied or lent to any other party without the written consent of Marathon Electric Motors (India) Limited.
01	C12.R6.01.30.00. AC6394				

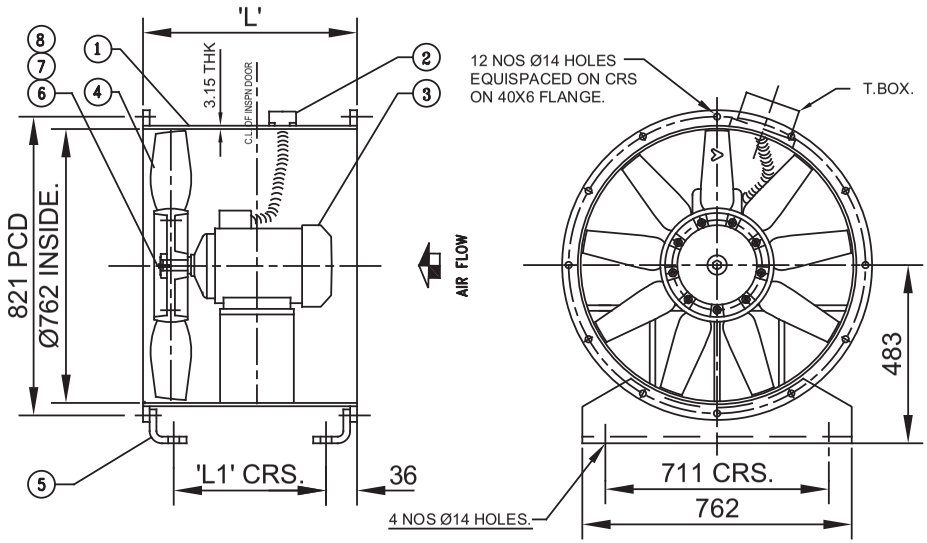

E L E V A T I O N.

VIEW FROM IMPELLER END.

NOTES -

1. POWER SUPPLY.
   415 V , 3 PH, 50 HZ , AC.
2. MOTOR DEGREE OF PROTECTION : IP-55.
3. MOTOR CLASS OF INSULATION : 'F' (TEMP. RISE LIMIT CLASS 'B').
4. MOTOR AMB. TEMP. : 50°C .
5. ALL MOTORS ARE IE-3, IS:12615.
6. PAINTING SPECIFICATION
   2 COAT RED OXIDE PRIMER OF THICKNESS 35 MICRON FOLLOWED UP WITH 2 COATS SYNTHETIC ENAMEL FINISH PAINT WITH 35 MICRON THICKNESS OF EACH COAT SHALL BE APPLIED.
   FINISH PAINT OF COLOUR SHADE 632 OF IS:5.
   TOTAL PAINT THICKNESS : DFT 140 Micron APPROX.
7. NOISE LEVEL 85 dBA AT 1.5 M (IN FREE FIELD COND.).
8. VIBRATION LIMIT AS PER IS:14817 (PART1),CLASS IV, LEVEL B.
9. FAN DYNAMICALLY BALANCED AS PER GR. 6.3, ISO:1940

SL.NO	DESCRIPTION	QTY	MATL.	REMARKS
8	LOCKING SCREW (at center)	1	IS:1367	
7	LOCKING WASHER.	1	IS:1079 GR 'O'	
6	LOCKING PLATE.	1	IS:2062 GR 'B'	
5	ATTACHABLE FEET	2	IS:2062 GR 'B'	
4	IMPELLER (AEROFOIL).	1	LM-6,BS:1490	DIE CAST
3	MOTOR.	1	STD. IE-3	
2	TERMINAL BOX	1	IS: 617	STD.
1	FAN CASING 3.15 THK	1	IS:1079 GR 'O'	

LOCATION	MODEL	FAN SIZE	TYPE & FRAME OF MOTOR	RATING (KW/P)	FLOW (M3/HR)	STATIC PR. mmwg at 20°c	SPEED (RPM)	SHAFT POWER AT 20°C (BKW)	'L'	'L1'	SALES REF NO
	30J/2K2-P4	750	TEFC,SQ CAGE FOOT MTD.,100L	2.2 KW 4-POLE	10,000	30	1450	1.60	500	428	EC18A14466
	30J/1K5-P4	750	TEFC,SQ CAGE FOOT MTD.,90L	1.5 KW 4-POLE	7,500	30	1450	1.25	500	428	EC18A14467
	30J/1K1-P4	750	TEFC,SQ CAGE FOOT MTD.,90S	1.1 KW 4-POLE	6,000	30	1450	0.90	470	398	EC18A14468

REV.	DATE	DETAIL OF REVISION	DONE BY	APPRVD	DDN NO.	DCN NO.
01	06.11.18	COMMENT'S INCORPORATED.	B.M.	B.M.		

ALL DIMENSIONS ARE IN mm.

DDN NO.	marathon	Marathon Electric Motors (India) Limited Paharpur Works, 58 Taratala Road. Kolkata - 700024 , INDIA			
PATTERN NO.					
PATTERN TYPE	TITLE	GEN. ARRGT. OF AXIAL FLOW FAN MODEL : 30J/2K2,1K5, & 1K1-P4			
PROJECTION					
MATERIAL:	DRAWN	B.Majumder		01.10.18	DRAWING NO. / REV
	CHECKED	S.BHOWMICK			
S.O. NO.	APPRVD.	S.Majumder		01.10.18	C12. R6. 01. 30. 00. AC6394 / 01
	SCALE	N.T.S	SIGN	DATE	

REV	DRAWING NO.	REF. DRG. NO.	For General Tolerance,Definition of various Symbols and Instructions refer Drawing No. CP3933/*. *(Rev. No.) should be taken from online "Drawing Master"	IF IN DOUBT , PLEASE ENQUIRE	These drawing and design are the property of Marathon Electric Motors (India) Limited. These must not be copied or lent to any other party without the written consent of Marathon Electric Motors (India) Limited.
01	C12.R6.01.30.00. AC6395				

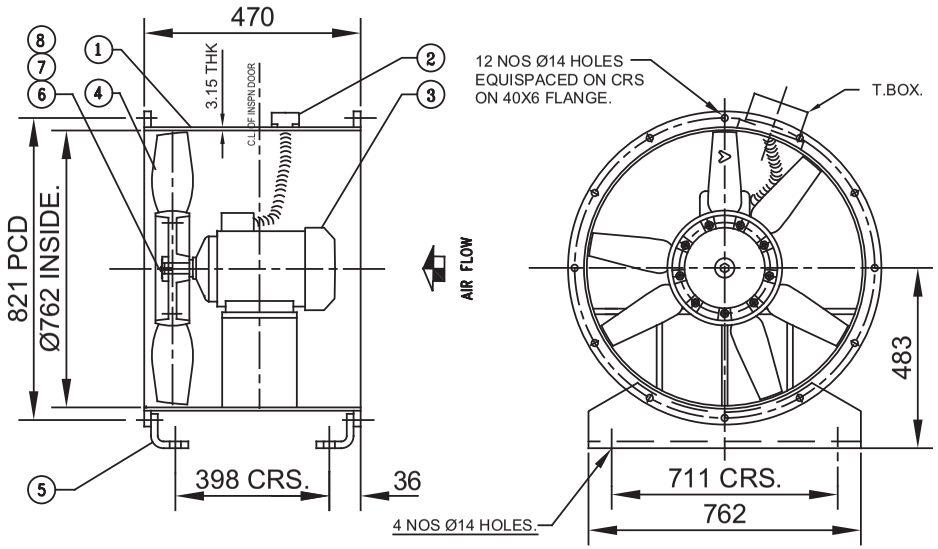

E L E V A T I O N.

VIEW FROM IMPELLER END.

NOTES -

1. POWER SUPPLY.
   415 V , 3 PH, 50 HZ , AC.
2. MOTOR DEGREE OF PROTECTION : IP-55.
3. MOTOR CLASS OF INSULATION : 'F' (TEMP. RISE LIMIT CLASS 'B').
4. MOTOR AMB. TEMP. : 50°C .
5. ALL MOTORS ARE IE-3, IS:12615.
6. PAINTING SPECIFICATION
   2 COATS RED OXIDE PRIMER OF THICKNESS 35 MICRON FOLLOWED UP WITH 2 COATS SYNTHETIC ENAMEL FINISH PAINT WITH 35 MICRON THICKNESS OF EACH COAT SHALL BE APPLIED.
   FINISH PAINT OF COLOUR SHADE 632 OF IS:5.
   TOTAL PAINT THICKNESS : DFT 140 Micron APPROX.
7. NOISE LEVEL 85 dBA AT 1.5 M (IN FREE FIELD COND.).
8. VIBRATION LIMIT AS PER IS:14817 (PART1),CLASS IV, LEVEL B.
9. FAN DYNAMICALLY BALANCED AS PER GR. 6.3, ISO:1940

LOCATION	MODEL	FAN SIZE	TYPE & FRAME OF MOTOR	RATING (KW/P)	FLOW (M3/HR)	STATIC PR. mmwg at 20°c	SPEED (RPM)	SHAFT POWER AT 20°C (BKW)	SALES REF NO
	30J2/3/1K1-P4	750	TEFC,SQ CAGE FOOT MTD.,90S	1.1 KW 4-POLE	4,000	30	1450	0.80	EC18A14469

SL.NO	DESCRIPTION	QTY	MATL.	REMARKS
8	LOCKING SCREW (at center)	1	IS:1367	
7	LOCKING WASHER.	1	IS:1079 GR 'O'	
6	LOCKING PLATE.	1	IS:2062 GR 'B'	
5	ATTACHABLE FEET	2	IS:2062 GR 'B'	
4	IMPELLER (AEROFOIL).	1	LM-6,BS:1490	DIE CAST
3	MOTOR.	1	STD. IE-3	
2	TERMINAL BOX	1	IS: 617	STD.
1	FAN CASING 3.15 THK	1	IS:1079 GR 'O'	

REV.	DATE	DETAIL OF REVISION	DONE BY	APPRVD	DDN NO.	DCN NO.
01	06.11.18	COMMENT'S INCORPORATED.	B.M.	B.M.		

ALL DIMENSIONS ARE IN mm.

DDN NO. / PATTERN NO.	marathon	Marathon Electric Motors (India) Limited Paharpur Works, 58 Taratala Road. Kolkata - 700024 , INDIA			
PATTERN TYPE / PROJECTION	TITLE	GEN. ARRGT. OF AXIAL FLOW FAN MODEL : 30J2/3/1K1-P4			
MATERIAL:	DRAWN	B.Majumder		01.10.18	DRAWING NO. / REV
	CHECKED	S.BHOWMICK			
S.O. NO.	APPRVD.	S.Majumder		01.10.18	C12. R6. 01. 30. 00. AC6395 / 01
	SCALE	N.T.S	SIGN	DATE	

REV	DRAWING NO.	REF. DRG. NO.	For General Tolerance,Definition of various Symbols and Instructions refer Drawing No. CP3933/*. *(Rev. No.) should be taken from online "Drawing Master"	IF IN DOUBT , PLEASE ENQUIRE	These drawing and design are the property of Marathon Electric Motors (India) Limited. These must not be copied or lent to any other party without the written consent of Marathon Electric Motors (India) Limited.
01	C12.R6.01.38.00. AC6396				

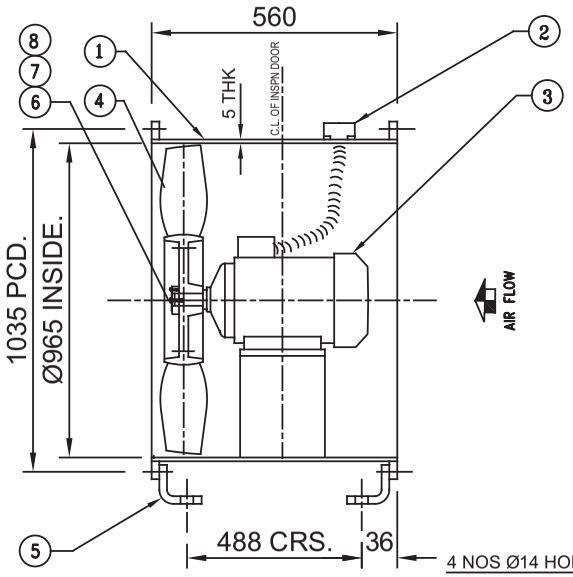

ELEVATION

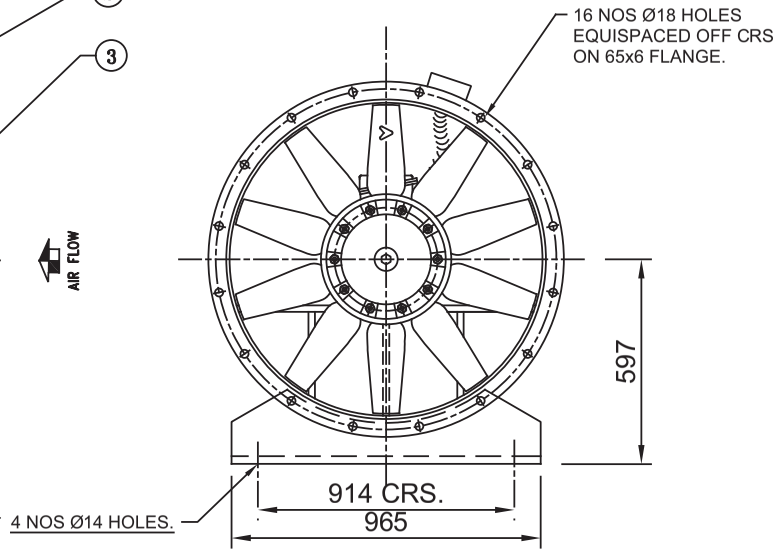

VIEW FROM IMPELLER END

NOTES -

1. POWER SUPPLY.
   415 V , 3 PH, 50 HZ , AC.
2. MOTOR DEGREE OF PROTECTION : IP-55.
3. MOTOR CLASS OF INSULATION : 'F' (TEMP. RISE LIMIT CLASS 'B')
4. MOTOR AMB. TEMP : 50°C
5. ALL MOTORS ARE IE-3, IS:12615.
6. PAINTING SPECIFICATION
   2 COATS OF RED OXIDE PRIMER OF THICKNESS 35 MICRON FOLLOWED UP WITH 2 COATS OF SYNTHETIC ENAMEL FINISH PAINT WITH 35 MICRON THICKNESS OF EACH COAT SHALL BE APPLIED. FINISH PAINT OF COLOUR SHADE 632 OF IS:5. TOTAL PAINT THICKNESS : DFT 140 Micron APPROX.
7. NOISE LEVEL 85 dBA AT 1.5 M (IN FREE FIELD COND.).
8. VIBRATION LIMIT AS PER IS:14817 (PART-1), CLASS IV, LEVEL B.
9. FAN DYNAMICALLY BALANCED AS PER GR. 6.3,ISO:1940.

SL.NO	DESCRIPTION	QTY	MATL.	REMARKS
8	LOCKING SCREW (at center)	1	IS:1367	
7	LOCKING WASHER.	1	IS:1079 GR 'O'	
6	LOCKING PLATE.	1	IS:2062 GR 'B'	
5	ATTACHABLE FEET	2	IS:2062 GR 'B'	
4	IMPELLER (AEROFOIL).	1	LM-6,BS:1490	DIE CAST
3	MOTOR.	1	STD. IE-3	
2	TERMINAL BOX	1	IS:617	STD.
1	FAN CASING 5 THK.	1	IS:2062 GR 'B'	

LOCATION	MODEL	FAN SIZE	TYPE & FRAME OF MOTOR	RATING (KW/P)	FLOW (M3/HR)	ST.PR. mmwg at 20°c	SPEED (RPM)	SHAFT POWER (BKW) at 20°c	SALES REF NO
	38J/2K2-P6	960	TEFC,SQ CAGE FOOT MTD., 112M	2.2 KW 6-POLE	10,000	20	960	1.30	EC18A14470

CLIENT

REV.	DATE	DETAIL OF REVISION	DONE BY	APPRVD	DDN NO.	DCN NO.
01	06.11.18	COMMENT'S INCORPORATED.	B.M.	B.M.		

ALL DIMENSIONS ARE IN mm.

DDN NO.
PATTERN NO.
PATTERN TYPE
PROJECTION
MATERIAL:
S.O. NO.

marathon

Marathon Electric Motors (India) Limited
Paharpur Works, 58 Taratala Road.
Kolkata - 700024 , INDIA

TITLE: GEN.ARRGT.OF TUBE AXIAL FLOW FANS
MODEL : 38J/2K2-P6

DRAWN	B.Majumder	B.Majumder	02.10.18
CHECKED	S.BHOWMICK		
APPRVD.	S.Majumder		02.10.18
SCALE	N.T.S	SIGN	DATE

DRAWING NO. C12. R6. 01. 38. 00. AC6396 REV 01

REV	DRAWING NO.	REF. DRG. NO.	For General Tolerance,Definition of various Symbols and Instructions refer Drawing No. CP3933/*. *(Rev. No.) should be taken from online "Drawing Master"	IF IN DOUBT , PLEASE ENQUIRE	These drawing and design are the property of Marathon Electric Motors (India) Limited. These must not be copied or lent to any other party without the written consent of Marathon Electric Motors (India) Limited.
01	C12.R6.01.36.00 AC6397				

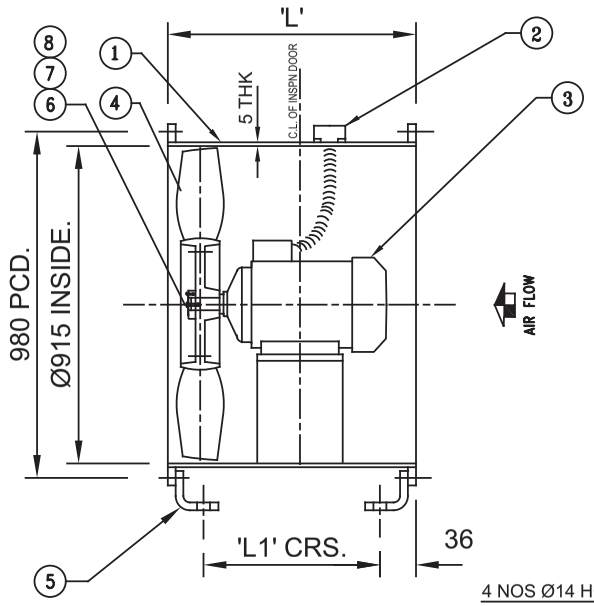

ELEVATION

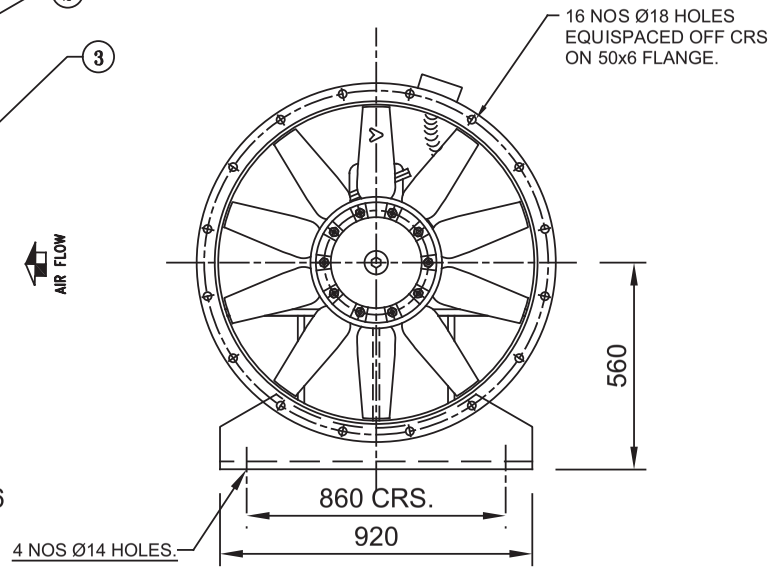

VIEW FROM IMPELLER END

NOTES -

1. POWER SUPPLY.
   415 V , 3 PH, 50 HZ , AC.
2. MOTOR DEGREE OF PROTECTION : IP-55.
3. MOTOR CLASS OF INSULATION : 'F' (TEMP. RISE LIMIT CLASS 'B')
4. MOTOR AMB. TEMP : 50°C.
5. ALL MOTORS ARE IE-3, IS:12615.
6. PAINTING SPECIFICATION.
   2 COATS OF RED OXIDE PRIMER OF THICKNESS 35 MICRON FOLLOWED UP WITH 2 COATS OF SYNTHETIC ENAMEL FINISH PAINT WITH 35 MICRON THICKNESS OF EACH COAT SHALL BE APPLIED. FINISH PAINT OF COLOUR SHADE 632 OF IS:5. TOTAL PAINT THICKNESS : DFT 140 Micron APPROX.
7. NOISE LEVEL 85 dBA AT 1.5 M DISTANCE (IN FREE FIELD COND.).
8. VIBRATION LIMIT AS PER IS:14817 (PART-1),CLASS-IV,LEVEL B.
9. FAN DYNAMICALLY BALANCED AS PER GR. 6.3,ISO:1940.

SL.NO	DESCRIPTION	QTY	MATL.	REMARKS
8	LOCKING SCREW (at center)	1	IS:1367	
7	LOCKING WASHER.	1	IS:1079 GR 'O'	
6	LOCKING PLATE.	1	IS:2062 GR 'B'	
5	ATTACHABLE FEET	2	IS:2062 GR 'B'	
4	IMPELLER (AEROFOIL).	1	LM-6 BS:1490	DIE CAST
3	MOTOR,'MARATHON' MAKE.	1	STD. IE-3	
2	TERMINAL BOX	1	IS:617	STD.
1	FAN CASING 5 THK	1	IS:2062 GR 'B'	

CLIENT

LOCATION	FAN MODEL	FAN SIZE	TYPE & FRAME OF MOTOR	RATING (KW/P)	FLOW (M3/HR)	ST. PR. mmwg at 20°c	SPEED (RPM)	SHAFT POWER (BKW) at 20°c	L	L1	SALES REF NO
	36J/1K5-P6	910	TEFC,SQ CAGE FOOT MTD.,100L	1.5 KW 6-POLE	7,500	20	960	1.10	520	448	EC18A14471
	36J/1K1-P6	910	TEFC,SQ CAGE FOOT MTD.,90L	1.1 KW 6-POLE	6,000	20	960	0.90	520	448	EC18A14472
	36J/1K1-P6	910	TEFC,SQ CAGE FOOT MTD.,90L	1.1 KW 6-POLE	4,000	20	960	0.80	520	448	EC18A14473

REV.	DATE	DETAIL OF REVISION	DONE BY	APPRVD	DDN NO.	DCN NO.
01	06.11.18	COMMENT'S INCORPORATED.	B.M.	B.M.		

ALL DIMENSIONS ARE IN mm.

DDN NO.
PATTERN NO.
PATTERN TYPE
PROJECTION
MATERIAL:
S.O. NO.

marathon

Marathon Electric Motors (India) Limited
Paharpur Works, 58 Taratala Road.
Kolkata - 700024 , INDIA

TITLE: GEN.ARRGT.OF AXIAL FLOW FAN
MODEL : 36J/1K5, 1K1-P6

DRAWN	B.Majumder	B.Majumder	02.10.18
CHECKED	S.BHOWMICK		
APPRVD.	S.Majumder		02.10.18
SCALE	N.T.S	SIGN	DATE

DRAWING NO. C12.R6.01.36.00. AC6397 REV 01

REV	DRAWING NO.	REF. DRG. NO.	For General Tolerance,Definition of various Symbols and Instructions refer Drawing No. CP3933/*. *(Rev. No.) should be taken from online "Drawing Master"	IF IN DOUBT , PLEASE ENQUIRE	These drawing and design are the property of Marathon Electric Motors (India) Limited. These must not be copied or lent to any other party without the written consent of Marathon Electric Motors (India) Limited.
01	C12.R6.01.38.00. AC6398				

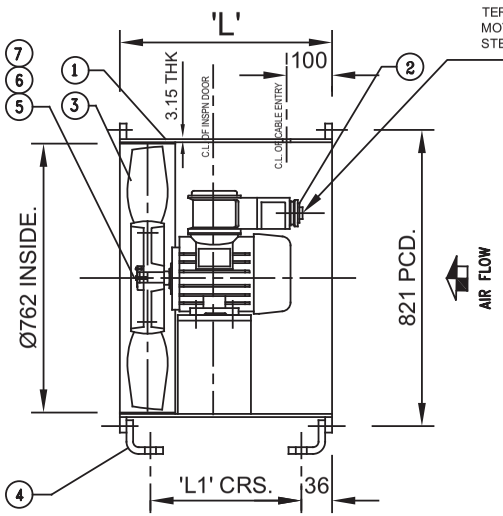

ELEVATION

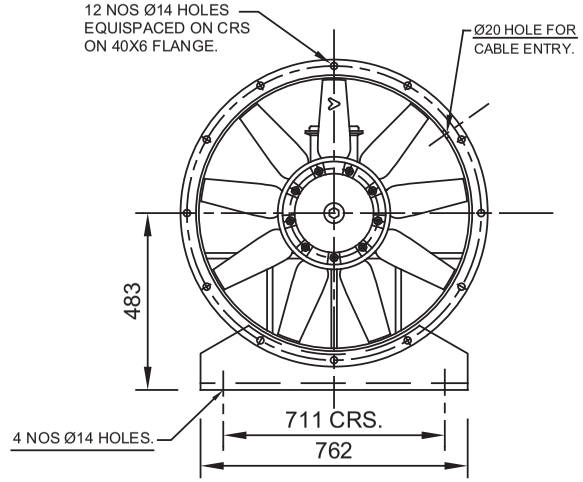

VIEW FROM IMPELLER END

NOTES :-

1. POWER SUPPLY
   415 v, 3 PH, 50 HZ, AC
2. MOTOR CLASS OF INSULATION : F (TEMP RISE LIMITED TO CLASS 'B').
3. MOTOR DEGREE OF PROTECTION : IP-55
4. MOTOR AMB. TEMP. : 50°C
5. MOTORS ARE AS PER IE-3.
6. MOTOR SUITABLE FOR FLP GAS GROUP IIA&IIB.
7. PAINTING SPEC.
   ALL SURFACES IN CONTACT WITH ACID FUMES 2 COATS OF EPOXY RESIN BASED ZINC PHOSPHATE PRIMER OF THICKNESS 35 MICRON FOLLOWED BY ONE INTERMEDIATE COAT OF EPOXY RESIN BASED PAINT PIGMENTED WITH TITANIUM DIOXIDE OF THICKNESS 35 MICRON TO BE APPLIED.
   ONE COAT OF EPOXY SHADE 632 OF IS:5 THICKNESS 35 MICRON TO BE APPLIED AS FINAL.
   TOTAL PAINT THICKNESS DFT 140 MICRON APPROX.
8. NOISE LEVEL 85 dBA AT 1.5 M (IN FREE FIELD COND.).
9. FAN DYN. BALANCED AS PER GRADE 6.3
10. VIBRATION LIMIT AS PER IS:14817 (PART-1), CLASS-IV, LEVEL B.

SL.NO	DESCRIPTION	QTY	MATL.	REMARKS
7	LOCKING SCREW (at center)	1	IS:1367,GR:6.6	
6	SPRING WASHER	1	IS:4072	
5	LOCKING PLATE.	1	IS:2062 GR 'B'	
4	ATTACHABLE FEET	2	IS:2062 GR 'B'	
3	IMPELLER (AEROFOIL).	1	LM-6, BS:1490	DIE CAST
2	MOTOR, FLP	1	IE-3	
1	FAN CASING 3.15 THK SPARKPROOF	1	IS:1079 GR 'O'	

CLIENT

LOCATION	FAN MODEL	FAN SIZE	TYPE & FRAME OF MOTOR	RATING (KWxP)	FLOW (M3/HR)	ST. PR. mmwg at 20°c	FAN SPED (RPM)	BKW at 20°c	L	L1	SALES REF NO
	FE30J/2K2-P6	750	TEFC SQ CAGE, FOOT MTD. 112M FLP	2.2 x 6	15,000	15	940	1.40	600	528	EC18F14474
	FE30J/1K1-P6	750	TEFC SQ CAGE, FOOT MTD. 90L FLP	1.1 x 6	10,000	15	940	0.95	480	408	EC18F14475
	FE30J/1K1-P6	750	TEFC SQ CAGE, FOOT MTD. 90L FLP	1.1 x 6	7,500	15	940	0.75	480	408	EC18F14476
	FE30J/K75-P6	750	TEFC SQ CAGE, FOOT MTD. 90L FLP	0.75 x 6	4,000	15	940	0.50	480	408	EC18F14477
	FE30J/K55-P6	750	TEFC SQ CAGE, FOOT MTD. 80 FLP	0.55 x 6	2,000	15	940	0.40	450	378	EC18F14478

REV.	DATE	DETAIL OF REVISION	DONE BY	APPRVD	DDN NO.	DCN NO.
01	06.11.18	COMMENT'S INCORPORATED.	B.M.	B.M.		

ALL DIMENSIONS ARE IN mm.

DDN NO. / PATTERN NO.	marathon	Marathon Electric Motors (India) Limited Paharpur Works, 58 Taratala Road. Kolkata - 700024 , INDIA			
PATTERN TYPE / PROJECTION	TITLE	GA DRAWING OF SPARKPROOF AXIAL FLOW FAN WITH FLP MOTOR FAN MODEL : FE 30J/2K2,1K1,K75,K55-P6.			
MATERIAL:	DRAWN	B.Majumder	02.10.18	DRAWING NO.	REV
	CHECKED	S.BHOWMICK		C12. R6. 01. 30. 00. AC6398	01
S.O. NO.	APPRVD.	S.majumder	02.10.18		
	SCALE	N.T.S	SIGN / DATE		

REV	DRAWING NO.	REF. DRG. NO.	For General Tolerance,Definition of various Symbols and Instructions refer Drawing No. CP3933/*. *(Rev. No.) should be taken from online "Drawing Master"	IF IN DOUBT , PLEASE ENQUIRE	These drawing and design are the property of Marathon Electric Motors (India) Limited. These must not be copied or lent to any other party without the written consent of Marathon Electric Motors (India) Limited.
01	C12.R6.01.30.00. AC6399				

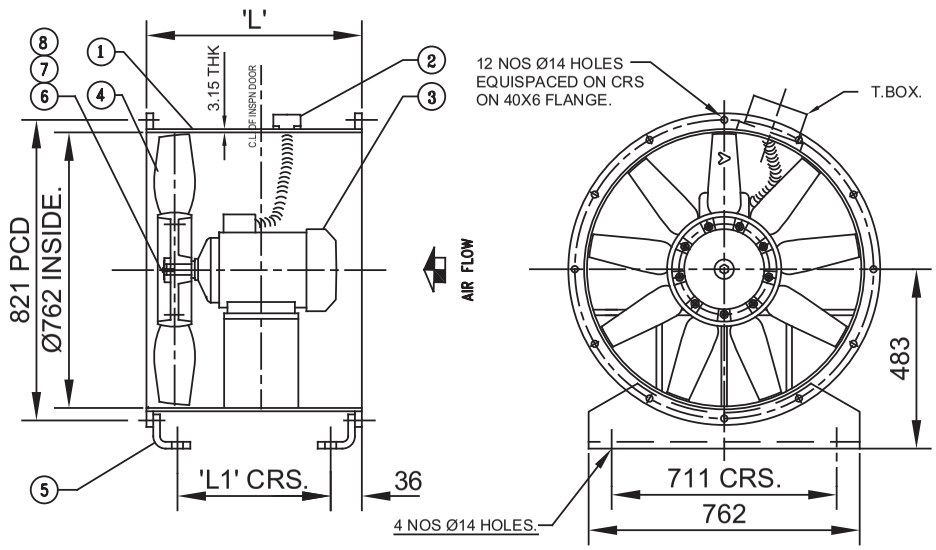

E L E V A T I O N.

VIEW FROM IMPELLER END.

NOTES -

1. POWER SUPPLY.
   415 V , 3 PH, 50 HZ , AC.
2. MOTOR DEGREE OF PROTECTION : IP-55.
3. MOTOR CLASS OF INSULATION : 'F' (TEMP. RISE LIMIT CLASS 'B').
4. MOTOR AMB. TEMP. : 50°C .
5. ALL MOTORS ARE IE-3, IS:12615.
6. PAINTING SPECIFICATION
   2 COAT RED OXIDE PRIMER OF THICKNESS 35 MICRON FOLLOWED UP WITH 2 COATS SYNTHETIC ENAMEL FINISH PAINT WITH 35 MICRON THICKNESS OF EACH COAT SHALL BE APPLIED. FINISH PAINT OF COLOUR SHADE 632 OF IS:5. TOTAL PAINT THICKNESS : DFT 140 Micron APPROX.
7. NOISE LEVEL 85 dBA AT 1.5 M (IN FREE FIELD COND.).
8. VIBRATION LIMIT AS PER IS:14817 (PART1),CLASS IV, LEVEL B.
9. FAN DYNAMICALLY BALANCED AS PER GR. 6.3, ISO:1940

LOCATION	MODEL	FAN SIZE	TYPE & FRAME OF MOTOR	RATING (KW/P)	FLOW (M3/HR)	STATIC PR. mmwg at 20°c	SPEED (RPM)	SHAFT POWER AT 20°C (BKW)	'L'	'L1'	SALES REF NO
	30J/1K1-P6	750	TEFC,SQ CAGE FOOT MTD.,90L	1.1 KW 6-POLE	15,000	10	940	0.92	500	428	EC18A14479
	30J/K75-P6	750	TEFC,SQ CAGE FOOT MTD.,90S	0.75 KW 6-POLE	10,000	10	940	0.61	480	408	EC18A14480

SL.NO	DESCRIPTION	QTY	MATL.	REMARKS
8	LOCKING SCREW (at center)	1	IS:1367	
7	LOCKING WASHER.	1	IS:1079 GR 'O'	
6	LOCKING PLATE.	1	IS:2062 GR 'B'	
5	ATTACHABLE FEET	2	IS:2062 GR 'B'	
4	IMPELLER (AEROFOIL).	1	LM-6,BS:1490	DIE CAST
3	MOTOR.	1	STD. IE-3	
2	TERMINAL BOX	1	IS: 617	STD.
1	FAN CASING 3.15 THK	1	IS:1079 GR 'O'	

CLIENT :

REV.	DATE	DETAIL OF REVISION	DONE BY	APPRVD	DDN NO.	DCN NO.
01	06.11.18	COMMENT'S INCORPORATED	B.M.	B.M.		

ALL DIMENSIONS ARE IN mm.

DDN NO.	marathon	Marathon Electric Motors (India) Limited Paharpur Works, 58 Taratala Road. Kolkata - 700024 , INDIA			
PATTERN NO.					
PATTERN TYPE	TITLE	GEN. ARRGT. OF AXIAL FLOW FAN MODEL : 30J/1K1 & K75-P6			
PROJECTION					
MATERIAL:	DRAWN	B.Majumder		02.10.18	DRAWING NO. / REV
	CHECKED	S.BHOWMICK			
S.O. NO.	APPRVD.	S.Majumder		02.10.18	C12. R6. 01. 30. 00. AC6399 / 01
	SCALE	N.T.S	SIGN	DATE	

REV	DRAWING NO.	REF. DRG. NO.	For General Tolerance,Definition of various Symbols and Instructions refer Drawing No. CP3933/*. *(Rev. No.) should be taken from online "Drawing Master"	IF IN DOUBT , PLEASE ENQUIRE	These drawing and design are the property of Marathon Electric Motors (India) Limited. These must not be copied or lent to any other party without the written consent of Marathon Electric Motors (India) Limited.
01	C12.R6.01.24.00. AC6400				

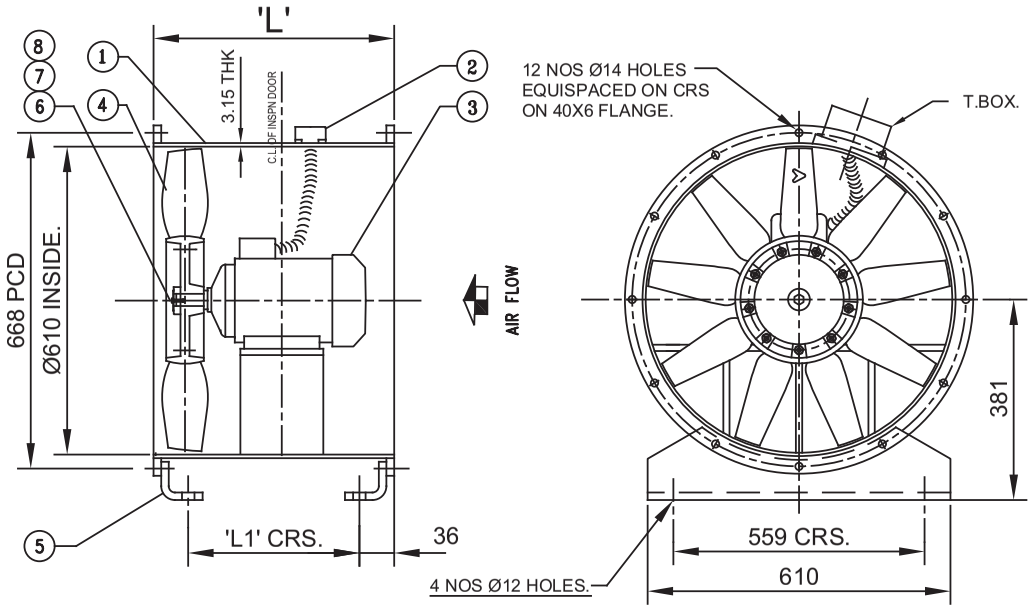

E L E V A T I O N.

VIEW FROM IMPELLER END.

NOTES -

1. POWER SUPPLY.
   415 V , 3 PH, 50 HZ , AC.
2. MOTOR DEGREE OF PROTECTION : IP-55.
3. MOTOR CLASS OF INSULATION : 'F' (TEMP. RISE LIMIT CLASS 'B').
4. MOTOR AMB. TEMP. : 50°C .
5. ALL MOTORS ARE IE-3, IS:12615.
6. PAINTING SPECIFICATION
   2 COATS RED OXIDE PRIMER OF THICKNESS 35 MICRON FOLLOWED UP WITH 2 COATS SYNTHETIC ENAMEL FINISH PAINT WITH 35 MICRON THICKNESS OF EACH COAT SHALL BE APPLIED. FINISH PAINT OF COLOUR SHADE 632 OF IS:5. TOTAL PAINT THICKNESS : DFT 140 Micron APPROX.
7. NOISE LEVEL 85 dBA AT 1.5 M (IN FREE FIELD COND.).
8. VIBRATION LIMIT AS PER IS:14817 (PART1),CLASS IV, LEVEL B.
9. FAN DYNAMICALLY BALANCED AS PER GR. 6.3, ISO:1940

LOCATION	MODEL	FAN SIZE	TYPE & FRAME OF MOTOR	RATING (KW/P)	FLOW (M3/HR)	STATIC PR. mmwg at 20°c	SPEED (RPM)	SHAFT POWER AT 20°C (BKW)	'L'	'L1'	SALES REF NO
	24J/K55-P6	605	TEFC,SQ CAGE FOOT MTD.,80	0.55 KW 6-POLE	7,500	10	940	0.44	406	334	EC18A14481
	24J/K55-P6	605	TEFC,SQ CAGE FOOT MTD.,80	0.55 KW 6-POLE	6,000	10	940	0.38	406	334	EC18A14482

SL.NO	DESCRIPTION	QTY	MATL.	REMARKS
8	LOCKING SCREW (at center)	1	IS:1367	
7	LOCKING WASHER.	1	IS:1079 GR 'O'	
6	LOCKING PLATE.	1	IS:2062 GR 'B'	
5	ATTACHABLE FEET	2	IS:2062 GR 'B'	
4	IMPELLER (AEROFOIL).	1	LM-6,BS:1490	DIE CAST
3	MOTOR.	1	STD. IE-3	
2	TERMINAL BOX	1	IS: 617	STD.
1	FAN CASING 3.15 THK	1	IS:1079 GR 'O'	

CLIENT :

REV.	DATE	DETAIL OF REVISION	DONE BY	APPRVD	DDN NO.	DCN NO.
01	06.11.18	COMMENT'S INCORPORATED.	B.M.	B.M.		

ALL DIMENSIONS ARE IN mm.

DDN NO.	marathon	Marathon Electric Motors (India) Limited Paharpur Works, 58 Taratala Road. Kolkata - 700024 , INDIA			
PATTERN NO.					
PATTERN TYPE	TITLE	GEN. ARRGT. OF AXIAL FLOW FAN MODEL : 24J/K55-P6			
PROJECTION					
MATERIAL:	DRAWN	B.Majumder		02.10.18	DRAWING NO. / REV
	CHECKED	S.BHOWMICK			
S.O. NO.	APPRVD.	S.Majumder		02.10.18	C12. R6. 01. 30. 00. AC6400 / 01
	SCALE	N.T.S	SIGN	DATE	

REV	DRAWING NO.	REF. DRG. NO.	For General Tolerance,Definition of various Symbols and Instructions refer Drawing No. CP3933/*. *(Rev. No.) should be taken from online "Drawing Master"	IF IN DOUBT , PLEASE ENQUIRE	These drawing and design are the property of Marathon Electric Motors (India) Limited. These must not be copied or lent to any other party without the written consent of Marathon Electric Motors (India) Limited.
01	C12.R6.01.24.01. AC6401				

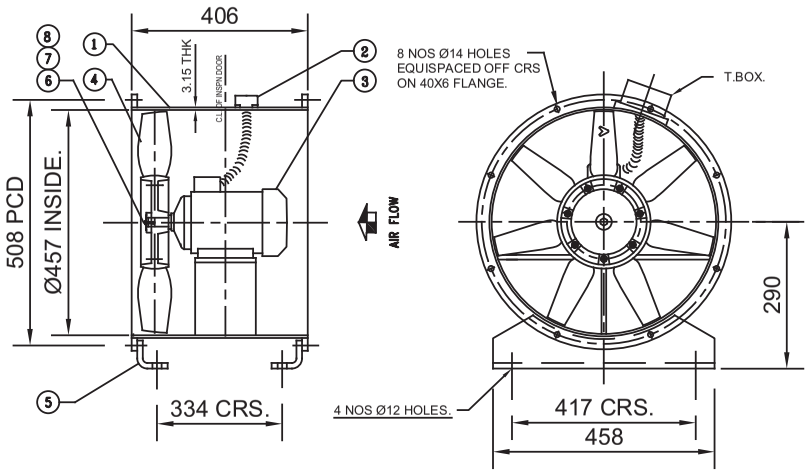

E L E V A T I O N.

VIEW FROM IMPELLER END.

NOTES -

1. POWER SUPPLY.
   415 V, 3 PH, 50 HZ, AC.
2. MOTOR DEGREE OF PROTECTION : IP-55.
3. MOTOR CLASS OF INSULATION : 'F' (TEMP RISE LIMIT CLASS 'B').
4. MOTOR AMB. TEMP = 50°C
5. ALL MOTORS IE-3, IS:12615.
6. PAINTING SPECIFICATION
   2 COATS OF RED OXIDE PRIMER OF THICKNESS 35 MICRON FOLLOWED UP WITH 2 COATS SYNTHETIC ENAMEL FINISH PAINT WITH 35 MICRON THICKNESS OF EACH COAT SHALL BE APPLIED.
   FINISH PAINT OF COLOUR SHADE 632 OF IS:5.
   TOTAL PAINT THICKNESS : DFT 140 MICRON APPROX.
7. NOISE LEVEL 85 dBA AT 1.5 M (IN FREE FIELD COND.)
8. VIBRATION LIMIT AS PER IS:14817 (PART-1) CLASS IV, LEVEL B.
9. FAN DYNAMICALLY BALANCED AS PER GR. 6.3, ISO:1940.

LOCATION	FAN MODEL	FAN SIZE	TYPE & FRAME OF MOTOR	RATING (KW/P)	FLOW (M3/HR)	STATIC PRESSURE mmwg AT 20°C	SPEED (RPM)	SHAFT POWER (BKW) AT 20°C	SALES REF NO
	18J/K37-P4	450	TEFC,SQ CAGE FOOT MTD. 80	0.37 KW 4-POLE	4,000	10	1440	0.22	EC18A14483
	18J/K37-P4	450	TEFC,SQ CAGE FOOT MTD. 80	0.37 KW 4-POLE	2,000	10	1440	0.19	EC18A14484

SL.NO	DESCRIPTION	QTY	MATL.	REMARKS
8	LOCKING SCREW (at center)	1	IS:1367	
7	LOCKING WASHER.	1	IS:1079 GR 'O'	
6	LOCKING PLATE.	1	IS:2062 GR 'B'	
5	ATTACHABLE FEET	2	IS:2062 GR 'B'	
4	IMPELLER (AEROFOIL).	1	LM-6,BS:1490	DIE CAST
3	MOTOR	1	STD. IE-3	
2	TERMINAL BOX	1	IS:617	STD.
1	FAN CASING 3.15 THK.	1	IS:1079 GR 'O'	

CLIENT :

REV.	DATE	DETAIL OF REVISION	DONE BY	APPRVD	DCN NO.	DCN NO.
01	06.11.18	COMMENT'S INCORPORATED	B.M.	B.M.		

ALL DIMENSIONS ARE IN mm.

DDN NO. C12DD0000 / PATTERN NO.	marathon	Marathon Electric Motors (India) Limited Paharpur Works, 58 Taratala Road. Kolkata - 700024, INDIA			
PATTERN TYPE / PROJECTION	TITLE	GEN.ARRGT.OF STANDARD AXIAL FLOW FAN MODEL : 18J/K37-P4			
MATERIAL:	DRAWN	B.Majumder	02.10.18	DRAWING NO.	REV
	CHECKED	S.Bhowmick			
S.O. NO.	APPRVD.	S.Majumder	02.10.18	C12.R6.01.18.01. AC6401	01
	SCALE	N.T.S	SIGN / DATE		

DATASHEET OF GATE VALVE

Sl No	Design Parameters	Description (400 NB TO 15 NB)
1	Manufacturer	H.Sarkar .
2	Sizes (NB)	As Per Approved P&ID (PE-V0-411-554-A602)
3	Quantity (Nos)	
4	Type	Manually Hand wheel operated
5	Pressure rating	PN-10
6	Body Test Pr.	15 Kg/Cm2
7	Seat Test Pr.	10 Kg/Cm2
8	Material Of Construction	
a	Body, Bonnet, Gland ,Wedge, Handwheel	Cast Iron, IS : 210 -1993, Grade – FG 220 /IS-780(FOR SIZE 65 NB & ABOVE)
b	Spindle	Stainless Steel AISI:410
c	Body & Wedge seat ring	Cast seat bronze
d	Bolts, Studs & Nuts	Steel
e	Body, Bonnet, Gland ,Wedge, Handwheel	Gun Metal IS-778 (FOR SIZE BELOW 50 NB)

NOTE:
1. WORKING PRESSURE:4.5 KG/CM2
2.Gate valves shall have renewable seats

NOTE: BODY TEST PRESSURE DURATION : 5 MIN AS PER IS 14846:2000
SEAT TEST PRESSURE DURATION : 2 MIN AS PER IS 14846:2000

HYDROSTATIC TEST PRESSURE IN KG/SQ.CM		
RATING	BODY	SEAT
PN– 10	15	10

P.O Sr.No.	QTY (Nos.)	NOMINAL SIZE NB	FACE TO FACE L	HEIGHT H2 (APPROX)	FLANGEDIMENSIONS				
					øA	C	PCD	N	ød
00020	02	65	190	380	185	16	145	4	19
00010	04	80	203	425	200	21	160	4	19
00090	04	150	267	595	285	23	240	8	23
00080	02	200	292	725	340	24.5	295	8	23
00070	04	300	356	910	445	27.5	400	12	23

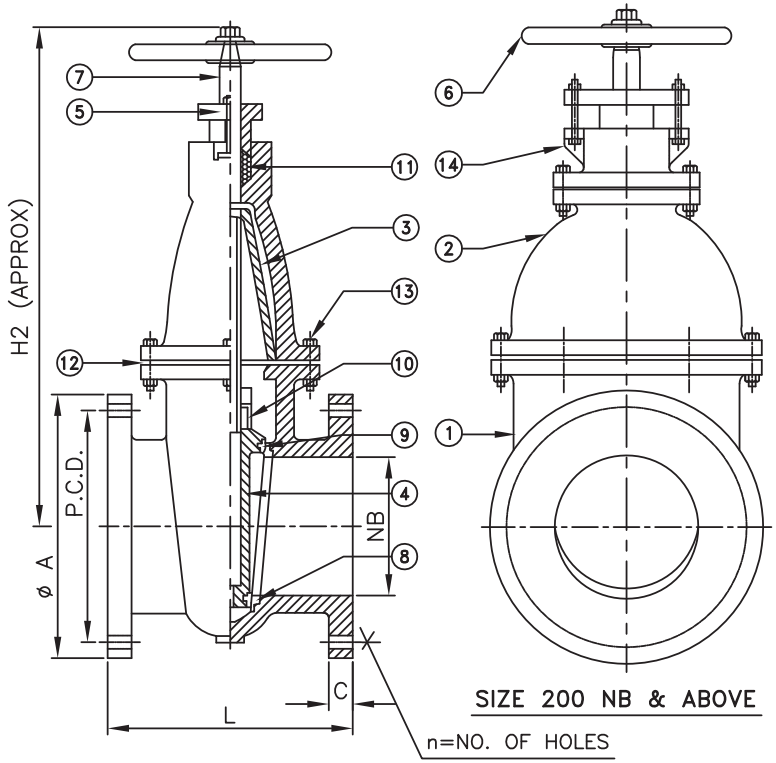

SIZE UP TO 150 NB

NO PART	COMPONENTS	MATERIAL	SPECIFICATION
1	BODY	CAST IRON	IS: 210 FG 220
2	BONNET	–DO–	–DO–
3	THRUST PLATE	–DO–	–DO–
4	WEDGE	–DO–	–DO–
5	GLAND	–DO–	–DO–
6	HANDWHEEL	CAST IRON	IS: 210 FG 220
7	STEM	13% CR. S.S.	TYPE 410
8	BODY SEAT RING	BRONZE	IS: 318 LTB 2
9	WEDGE FACING RING	–DO–	–DO–
10	WEDGE NUT	BRONZE	IS: 318 LTB 2
11	GLAND PACKING	JUTE & HEMP	IS: 5414
12	GASKET	RUBBER	IS: 638 TYPE B
13	BOLTS & NUTS	CARBON STEEL	IS:1363, CL–4.6/4.0
14	STUFFING BOX	CAST IRON	IS: 210 FG 220

ALL DIMENSIONS ARE IN MM EXCEPT AS STATED

1. DESIGN CODE : IS: 14846–2000 RA–2001
2. RATING OF VALVE : PN– 10
3. FLANGE DIMENSIONS : AS PER IS: 14846–2000 FOR SIZE 65 NB & IS: 1538, TABLE IV & VI FLAT FACE FOR SIZES 80 NB & ABOVE
4. TESTING : AS PER APPROVED Q A P
5. TOLERANCES : AS PER CODE.
6. PAINTING : As Per BHEL Specification

DATE	REV	DESCRIPTION

R E V I S I O N S

H.SARKER & COMPANY VALVES (P) LTD.
H O W R A H

CUSTOMER
PROJECT (1x800MW) KOTHAGUDEM SUPER CRITICAL THERMAL POWER STATION
PO NO. 4200262901. DATE : 01–01–2017
TITLE CAST IRON GATE VALVE INSIDE SCREW NON–RISING STEM
DRG. NO. HS/ISSV/289/16–17/1 REV. 00
SCALE: N.T.S.

DRAWN	CHKD	APPROVED	DATE
S.MONDAL			31–01–17

DATASHEET OF CI NON RETURN VALVE

Sl No	Design Parameters	Description
1	Manufacturer	Bankim .
2	Sizes	As Per Approved P&ID (PE-V0-411-554-A602)
3	Quantity	
4	Type	Swing check type
5	Pressure rating	PN-10
6	Body Test Pr.	15 Kg/Cm2
7	Seat Test Pr.	10 Kg/Cm2
8	Material of Construction	
9	Body CI	IS:210,Gr.FG260
10	Door face	Natural Rubber
11	Body Ring	Bronze
12	Gasket Natural	Rubber
13	Cover C.I	
14	Studs and Nuts	Carbon Steel
15	Washer	Brass to BS 2874
16	Flange standard	IS: 5312

NOTE:

1. WORKING PRESSURE: 4.5 KG/CM2

2.All other check valves shall be of the guided piston, swing disk, or double disk spring check type. The use of double disk spring check valves shall be limited to 350 mm and larger cold-water services. All check valves shall be designed for installation in either horizontal or vertical piping with upward flow.

3. Painting as per BHEL Specification

NOTE: BODY TEST PRESSURE DURATION : 5 MIN AS PER IS 14846:2000

SEAT TEST PRESSURE DURATION : 2 MIN AS PER IS 14846:2000

QTY.	NOMINAL SIZE OF VALVE (NB)	FACE TO FACE 'A'	FLANGE DIMENSIONS					HYD. TEST PRESSURE Kg / Cm 2		HINGE PIN DIA.
			DIA 'B'	THK. 'C'	P.C.D.	NO. OF HOLES	HOLE DIA. 'F'	BODY	SEAT	
2	200	495 ±3	343	28.6 $^{+3}_{-0}$	298.4	8	22.2	15	10	20
2	250	622 ±3	406.5	30.2 $^{+3}_{-0}$	362	12	25.4	15	10	22

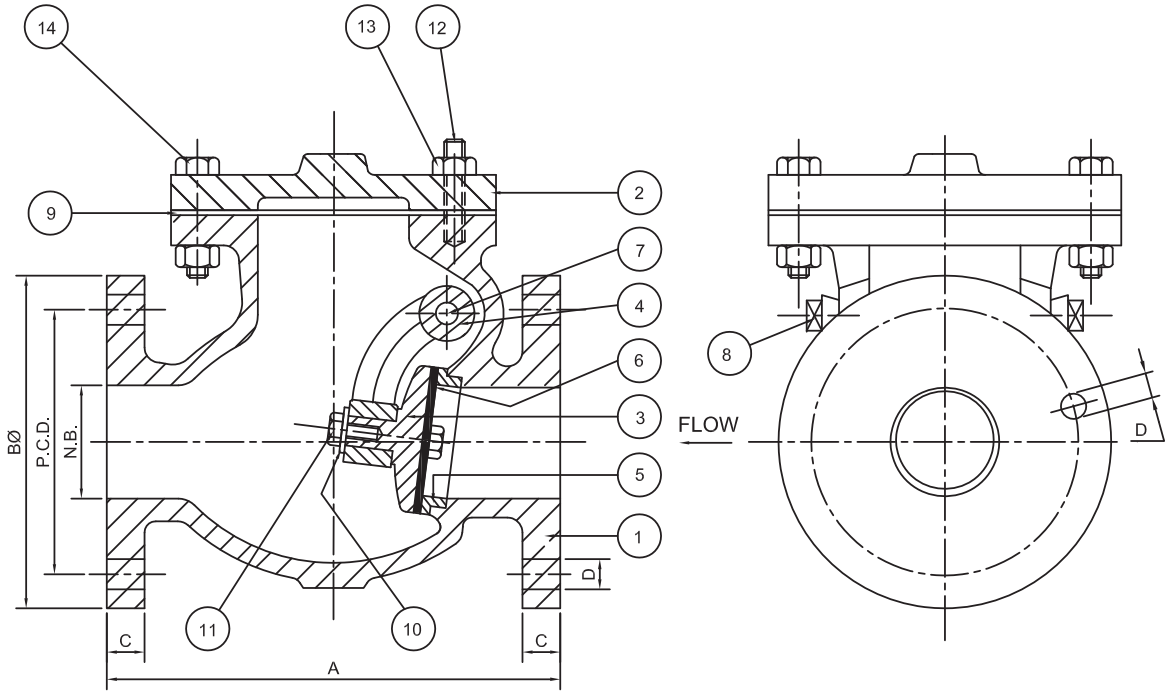

SL. NO.	DESCRIPTION	MATERIAL	SPECIFICATION
14	BOLTS	CARBON STEEL	IS: 1367: CL-4.6/4
13	NUTS	CARBON STEEL	IS: 1367: CL-4.6/4
12	STUDS	CARBON STEEL	IS: 1367: CL-4.6/4
11	DOOR LOCKING SET SCREW	STAINLESS STEEL	ASTM-A-276,TYPE-410
10	DOOR LOCKING WASHER	STAINLESS STEEL	ASTM-A-276,TYPE-410
9	GASKET	RUBBER	IS:638, TYPE-B
8	HINGE PIN PLUG	MILD STEEL	IS: 2062, GRADE-A
7	HINGE PIN	STAINLESS STEEL	ASTM-A-276,TYPE-410
6	FLAP FACING	NATURAL RUBBER HARDNESS 70° ± 5°, SHORE-'A'	
5	BODY SEAT RING	BRONZE	IS : 318, LTB - 2
4	HINGE BRACKET	CAST IRON	IS : 210 ; FG - 260
3	FLAP	CAST IRON	IS : 210 ; FG - 260
2	COVER	CAST IRON	IS : 210 ; FG - 260
1	BODY	CAST IRON	IS : 210 ; FG - 260

ALL DIMENSIONS ARE IN MM.

NOTES

1. DESIGN AS PER : BS : 5153
2. PRESSURE RATING : PN 10
3. FACE TO FACE ASPER : ANSI-B-16.10, CLASS-150
4. FLANGE DIMENSIONS & DRILLING : ANSI-B-16.5, CLASS-150, FLAT FACE.

REV. NO.	DATE	NAME

REVISION TABLE

PO.NO. 4200262904

DATE: 10.01.17.

	NAME	DATE
DRAWN	B. DUTTA	18.01.17.
CHECKED	S. DAS.	18.01.17.
APPROVED	P. DAS.	18.01.17.

MANUFACTURER:-

JOB. NO. E.034 / Q

SCALE - N. T. S.

OWNER :- BHEL
PROJECT :- KOTHAGUDAM SUPER CRITICAL THERMAL POWER STATION.
CLIENT :- BHEL /

TITLE "BANKIM" CAST IRON NON RETURN VALVE SWING TYPE

MANUFACTURER:-

BANKIM & COMPANY

DRG. NO. BM / SWL / BHEL / E.034 / Q / CIRV-105 REV. 0

DATASHEET OF MOTORISED BUTTERFLY VALVE

Sl No	Design Parameters	Description
1	Manufacturer	BELIMO .
2	Sizes	As Per Approved P&ID (PE-V0-411-554-A602)
3	Quantity	
4	PN rating	PN16
5	Enclosure protection class	IP 67
6	Material of Construction	
a	Body	GG 25 (GREY CAST IRON)
b	Stem	SS416
c	Disc	Epoxy coated ductile iron
d	Liner	EPDM
7	Actuator	
a	Power Supply	4-20 mA, 50/60Hz
b	Outdoor protection	IP67 Waterproof
c	Indicator	Continuous Position Indicator
d	Worm Gear	Permanently lubricated and self locking

NOTE:
1. WORKING PRESSURE: 4.5 KG/CM2

BANKIM & COMPANY

TECHNICAL DATA SHEET
CAST IRON GLOBE VALVE

1. Client	-	TSGENCO/BHEL
2. Project	-	BHADRADRI
3. Sub Contractor	-	Sterling & Wilson.
4. Manufacturer	-	Bankim & Company.
5. Type of Valve.	-	C.I. Globe Valve, Outside Screwed, Rising Type Stem.
6. Construction Details :-		
a. Bonnet	-	Yoke Type, Bolted.
b. Spindle	-	Outside Screwed, Rising Type.
c. Disc	-	Solid Renewable Loose Plug Type.
d. Seat	-	Renewable.
e. End Connection.	-	Flanged.
7. Materials of Construction :-		
a. Body, Bonnet, Disc, Gland & Hand wheel.	-	Cast Iron to IS-210, FG-200
b. Spindle	-	S.S. to ASTM-A-276, TYPE-410.
c. Body Seat Ring	-	Gun Metal to IS: 318, LTB-2.
d. Disc Seat Ring	-	-DO-
e. Disc Nut	-	-DO-
f. Back Seat Bush	-	-DO-
g. Gasket	-	C.A.F. to IS: 2712, Gr.C.
h. Gland Packing	-	Graphited Asbestos.
i. Bolts, Nuts & Studs.	-	Carbon Steel to IS:1367, Cl. 4.6/4.0
8. Flange to Flange distance.	-	As per BS: 5152.
9. Flange dimension and drilling	-	As per ANSI-B-16.5, Class-150, Flat Face.
10. Design Code	-	As per BS:5152
11. Rating of Valve	-	PN-10
12. Hydrostatic Test Pressure :-		
a. Body	-	15 Kg/Cm^2
b. Seat & Back Seat	-	10 Kg/Cm^2

Qty & Location: As Per Approved P&ID No: (PE-V0-411-554-A602)

NOTE: The valves are provided with Back Seat, Indicator, Locking and Drain Plug arrangement. 200NB and above valves are provided with Back Seat, Indicator, Locking, Drain Plug and Gear arrangement

QTY.	NOMINAL SIZE OF VALVE NB. (MIN)	FACE TO FACE A	FLANGE DIMENSIONS					HEIGHT. 'H' (MAX)		HYD.TEST PRESSURE kg / Cm 2		STEM DIA d ±1	HAND WHEEL DIA w ± 5
			DIA B	THICK C	P.C.D.	NO. OF HOLES	HOLE DIA D	CLOSED	OPEN	BODY	BACK SEAT & SEAT		
2	**200 MM**	495±3	343	28.6^{+3}_{-0}	298.4	8	22.2	570	620	15	10	32	400
2	**250 MM**	622±3	406.5	30.2^{+3}_{-0}	362	12	25.4	660	725	15	10	36	400

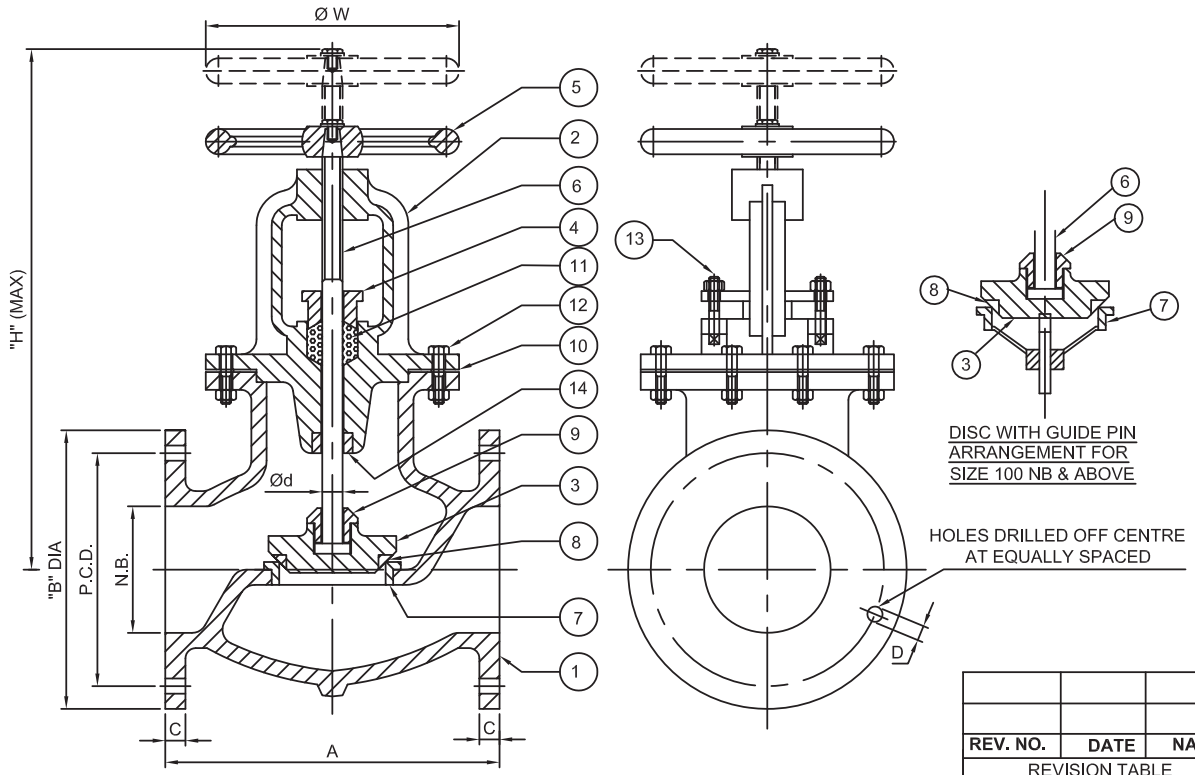

DISC WITH GUIDE PIN ARRANGEMENT FOR SIZE 100 NB & ABOVE

ALL DIMENSIONS ARE IN MILLIMETRES

PT NO	DESCRIPTION	MATERIAL	SPECN
14	BACK SEAT BUSH	BRONZE	IS:318, LTB-2
13	GLAND STUDS & NUTS	CARBON STEEL	IS:1367; CL- 4.6/4
12	BONNET BOLTS & NUTS	CARBON STEEL	IS:1367; CL- 4.6/4
11	GLAND PACKING	GRAPHITED ASBESTOS	IS : 4687 - 80
10	GASKET	RUBBER	IS:638, TYPE-B
9	DISK NUT	BRONZE	IS : 318; LTB-2
8	DISK FACING RING	BRONZE	IS : 318; LTB-2
7	BODY SEAT RING	BRONZE	IS : 318; LTB-2
6	STEM	STAINLESS STEEL	ASTM-A-276, TYPE-410
5	HAND WHEEL	CAST IRON	IS : 210 ; FG - 260
4	GLAND	CAST IRON	IS : 210 ; FG - 260
3	DISC	CAST IRON	IS : 210 ; FG - 260
2	BONNET	CAST IRON	IS : 210 ; FG - 260
1	BODY	CAST IRON	IS : 210 ; FG - 260

REV. NO.	DATE	NAME

REVISION TABLE

PO.NO. 4200262904

DATE: 10.01.17.

OWNER :- **BHEL**
PROJECT :- **KOTHAGUDAM SUPER CRITICAL THERMAL POWER STATION.**
CLIENT :- **BHEL /**

NOTE

1. DESIGN AS PER : BS : 5152
2. PRESSURE RATING : PN 10
3. FACE TO FACE ASPER : ANSI-B-16.10, CLASS-150
4. FLANGE DIMENSIONS & DRILLING : ANSI-B-16.5, CLASS-150, FLAT FACE.

	NAME	DATE
DRAWN	B. DUTTA.	18.01.17.
CHECKED	S. DAS.	18.01.17.
APPROVED	P. DAS.	18.01.17.

MANUFACTURER:-

JOB. NO. E.034 / Q

SCALE - N. T. S.

TITLE **"BANKIM" CAST IRON GLOBE VALVE. OUT SIDE SCREWED RISING SPINDLE.**

MANUFACTURER:-

BANKIM & COMPANY

DRG. NO. BM / SWL / BHEL / E.034 / Q / CIGV-104 **REV. 0**

PROJECT: - (4X270 MW) BHADRADRI THERMAL POWER PROJECT

TECHNICAL DETAILS:

"SANT" Ball Valve with Strainer:

BODY:	Forged Brass (IS:6912 Gr. FLB)
BONNET:	Forged Brass (IS:6912 Gr. FLB)
CONNECTOR:	Forged Brass (IS:6912 Gr. FLB)
BALL:	Brass
STEM:	Brass
STRAINER:	S.S. (AISI.304)
RATING:	PN25
DESIGN:	2 piece design with Inbuilt Strainer
END:	Screwed female BSP Parallel Threads
Body Test Pressure:	40kg/cm²g Hyd.
Working Pressure:	25kg/cm²g Hyd.

"AUDCO" Flowserve Ball Valve:

BODY:	ASTM A 216 GR. WCB
BALL:	S.S.316
STEM:	S.S.316
SEAT:	PTFE
BODY SEAL:	PTFE
DESIGN:	3 PC. REGULAR BORE
RATING:	CLASS # 800
END:	SOCKET WELD END

SL No	VALVE SIZE	CLASS	A	B	PORT øD	M	N	øP	Q	QTY	WEIGHT APPROX. (kg)	CATALOGUE NUMBER
1	DN25	800	94.0	47.0	20.7	65	150	34.3	13.5	188	1.6	10LR-4446TT-CT
4								33.9	13.0	3		
2	DN32	800	106	53.0	25.4	70	150	43.0	13.5	57	2.2	12LR-4446TT-CT
5								42.7	13.0	8		
3	DN40	800	114	57.0	31.8	78	181	49.1	13.5	67	3.2	15LR-4446TT-CT
6								48.8	13.0	144		

ITEM NO.	DESCRIPTION	MATERIAL
1	BODY	ASTM A216 Gr.WCB
2	BODY CONNECTOR	
3	BALL	ASTM A351 Gr.CF8M/ ASTM A479 TP.316
4	SEAT	PTFE – VIRGIN
5	BODY SEAL	PTFE – VIRGIN
6	STEM	ASTM A479 TP.316
7	THRUST SEAL/GLAND PACKING	35% CARBON FILLED PTFE
8	GLAND	ASTM A479 TP.316
9	LEVER	ASTM A36-ZINC PLATED
10	SLEEVE	VINYL PLASTISOL
11	HEX. HEAD BOLT	IS 1367 Part 3 Gr.8.8/ Gr.10.9 Zn. PLATED
12	NUT	IS 1367 Part 6 Gr.8 Zn. PLATED
	IDENTIFICATION PLATE	SS 304

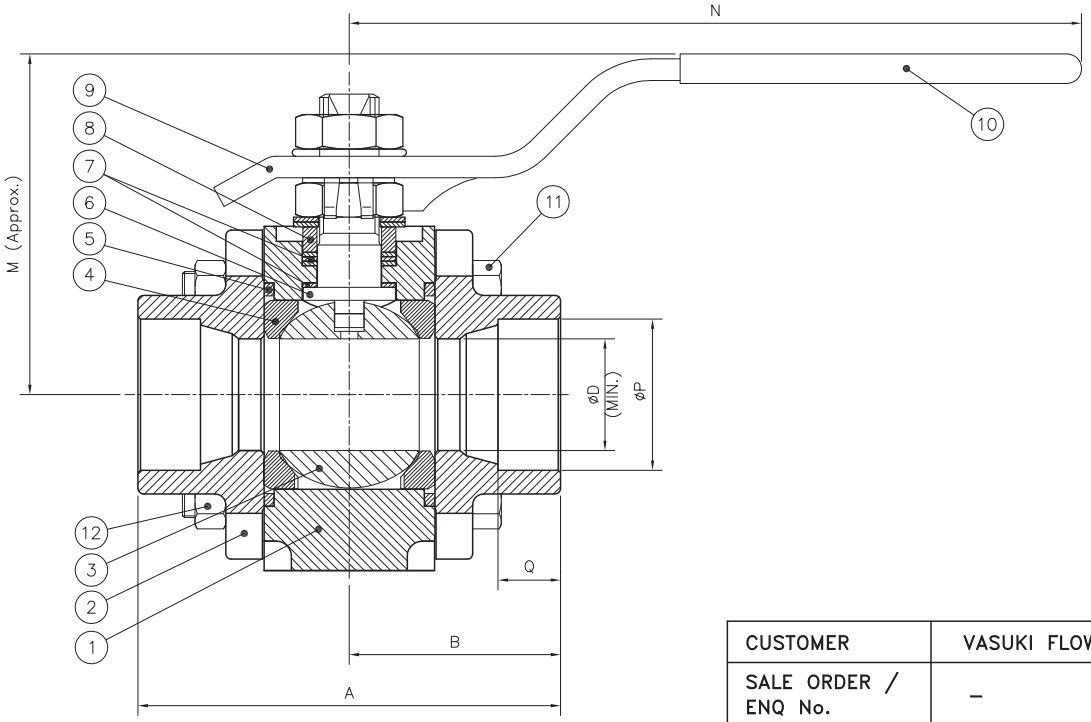

STANDARDS	
STANDARD COMPLIANCE	BS EN ISO 17292
END CONNECTIONS	ASME B16.11
TEST METHOD	EN 12266 PART 1 – RATE A (ZERO LEAKAGE)

TEST PRESSURE – psig (bar)		
SHELL	HYDROSTATIC	2975 (205)
SEAT	AIR	80 (5.5)

CUSTOMER	VASUKI FLOWTECH PVT LTD.,
SALE ORDER / ENQ No.	–
P.O No.	F/JSR/432/434 DATE : 09/02/2017

UNLESS OTHERWISE SPECIFIED:
ALL DIMENSIONS ARE IN mm
ALL PROJECTIONS ARE THIRD ANGLE

REV	DATE	ALT.NO.	SIG.		
				DRAWN	SHA
				CHECKED	SAK
				APPROVED	NVD
				DATE	15/02/2017
				SCALE	N.T.S

FLOWSERVE

FLOWSERVE INDIA CONTROLS PVT. LTD.
MARAIMALAI NAGAR

TITLE
AUDCO FLOATING BALL VALVE

SIZE : REFER TABLE	CLASS : REFER TABLE	CAT. NO.: REFER TABLE	
REF. NO.: –	DRG. No.: FBVENQ-0048	REV. 0	SHEET 1 OF 1

NOTES:

1. VALVES ARE OFFERED WITH REDUCED BORE.
2. TOLERANCE ON FACE TO FACE SHALL BE ±2.0mm
3. BODY AND CONNECTOR SHALL BE MANGANESE PHOSPHATED FOR CARBON STEEL VALVES.

	TECHNICAL DATA SHEET FOR POT STRAINER (SIMPLEX BASKET STRAINER)	
	CLIENT : TSGENCO/BHEL/STERLING AND WILSON LTD.	PROJECT : BHADRADRI- VENT PROJECT
	MANUFACTURER : AS PER APPROVED MAKE.	
	FEIPL JOB NO. : V/V/17/0187	
	DOC. NO. : PE-V0-411-554-A204, REV-0	

SR.NO.	DESCRIPTION	DATA/PARAMETERS
1.0	**GENERAL INFORMATION**	
1.1	Type of Strainers/Filters	Simplex basket Strainer
1.2	Design standard	ASME SEC. VIII DIV.1
1.3	End connection	500 NB, PN 16
1.4	Design pressure	10 Kg/cm2
1.5	Hydro test pressure	15 Kg/cm2
1.6	Degree of filtration	40 Mesh
1.7	Quantity	2 Nos.
2.0	**MATERIAL OF CONSTRUCTION**	
2.1	Shell body	IS 2062 Gr.BR E 250
2.2	Body flange	IS 2062 Gr.BR E 250
2.3	Cover flange	IS 2062 Gr.BR E 250
2.4	Gasket	EPDM
2.5	Fasteners	A 193Gr. B7/ A 194 Gr.2H
2.6	Dish end	IS 2062 Gr.BR E 250
2.7	Bottom plate	IS 2062 Gr.BR E 250
2.8	Inlet outlet nozzle	IS 2062 Gr.BR E 250
2.9	Inlet outlet flange	IS 2062 Gr.BR E 250
2.10	R.F. Pad	IS 2062 Gr.BR E 250
2.11	Filter element	Brass
2.12	Element ring	IS 2062 Gr.BR E 250
2.13	Seating ring	IS 2062 Gr.BR E 250
2.14	Gasket	EPDM
2.15	Element holding ring	IS 2062 Gr.BR E 250
2.16	Vent coupling with plug	A 105
2.17	Drain coupling with plug	105
2.18	Name plate	FEIPL STD
2.19	Lifting lug	IS 2062 Gr.BR E 250
2.20	Pad plate	IS 2062 Gr.BR E 250
3.0	**TECHNICAL DETAILS**	
3.1	Design code	ASME SEC. VIII DIV.1
4.0	**NOZZLE CONNECTION**	
4.1	Inlet	500 NB, PN 16
4.2	Out let	500 NB, PN 16
4.3	Drain	1" NPT

16.01.2017	R.S	N.K.	V.R.	00
DATE	**PREPARED BY**	**CHECKED BY**	**APPD.BY**	**NO.REV.**

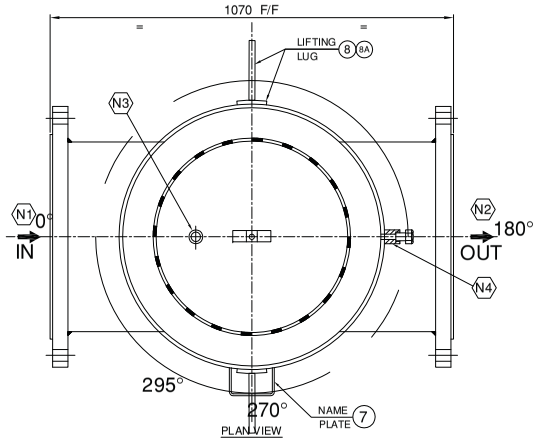

PLAN VIEW

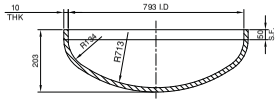

2 :1 ELLIPSODICAL DISHED END 1E
NOM. THK.10 / MIN. THK.8

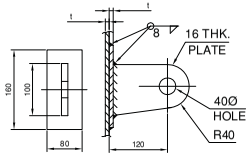

LIFTING LUG DETAIL 8 8A

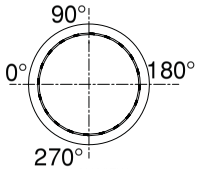

PLAN VIEW

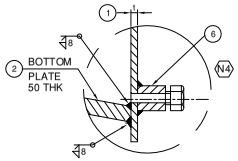

DRAIN CONNECTION DETAIL

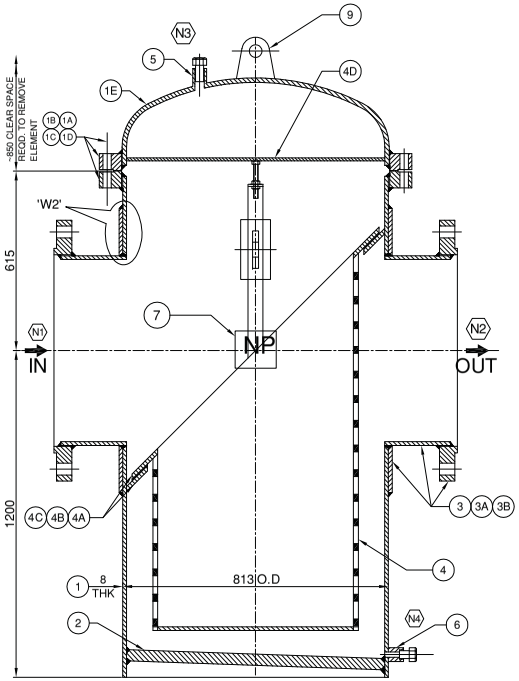

ELEVATION

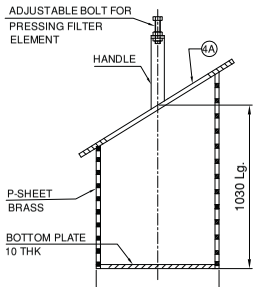

ELEMENT DETAIL 4

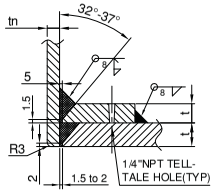

TYP.WELD DETAIL-'W2'
SHELL TO REINFORCED NOZZLE

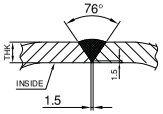

DETAIL OF-'W1'
(CIRCUMFERENTIAL WELD-LONG WELD))

DESIGN DATA		
END CONNECTION		500 NB, PN 16
DESIGN PRESSURE	(BAR G)	10
HYDRO TEST PRESSURE	(BAR G)	15
DEGREE OF FILTERATION	MESH	40
QUANTITY	NOS	02

NOTES:-

1. ALL DIMENSIONS ARE IN MM. UNLESS OTHERWISE SPECIFIED.
2. DIMENSION TOLERANCE WILL BE ±5MM.
3. END CONNECTION WILL BE DRILLED AS PER PN 16.
4. DIRECTION OF FLOW SHALL BE CLEARED MARKED ON STRAINER BODY.
5. PLATE FLANGES WILL BE WITHOUT HUB.
6. PAINTING :
   1) SAND BLASTING AS PER SA 2 1/2 AS PER SWEDISH STANDARD SIS 0055900
   2) INTERNAL SURFACE COATED WITH RUST PREVENTIVE BLACK JAPAN PAINT.
   3) EXTERNAL SURFACE PAINT WITH 1 COAT PRIMER COAT-INORGANIC ZINC SILICATE, DFT-45-50MICRONS.
   4) FINAL TWO COAT OF EPOXY PAINT, DFT 65-70 MICRONS COLOUR SMOKE GREY.

SR NO.	DESCRIPTION	MATERIAL	SIZE	QTY.
8A	PAD PLATE	IS 2062 Gr E250 BR	8 THK.	2
8	LIFTING LUG	IS 2062 Gr E250 BR	16 THK.	2
7	NAME PLATE	FEIPL STD.	FEIPL STD.	1
6	DRAIN COUPLING WITH PLUG	A 105	1"NPT, 3000#	1
5	VENT COUPLING WITH PLUG	A 105	1"NPT, 3000#	1
4D	ELEMENT HOLDING	IS 2062 Gr E250 BR	8 THK	1
4C	GASKET	EPDM	3THK	1
4B	SEATING RING	IS 2062 Gr E250 BR	8 THK	1
4A	ELEMENT RING	IS 2062 Gr E250 BR	8 THK	1
4	FILTER ELEMENT	BRASS	40 MESH P-SHEET-ø19 X 22Δ PITCH, 2THK	1
3B	R.F. PAD PLATE	IS 2062 Gr E250 BR	127W X 8 THK.	2
3A	INLET/OUTLET FLANGE	IS 2062 Gr E250 BR	500NB, PN 16	2
3	INLET/OUTLET NOZZLE	IS 2062 Gr E250 BR	508 O.D X 8THK	1
2	BOTTOM PLATE	IS 2062 Gr E250 BR	50 THK	1
1E	DISHED END	IS 2062 Gr E250 BR	10THK X 2 :1 ELLIPSODICAL	1
1D	FASTENER	A193 GR.B7, A194 GR.2H	STD.	--
1C	GASKET	EPDM	3THK	1
1B	COVER FLANGE	IS 2062 Gr E250 BR	800NB,SORF PN 16	1
1A	BODY FLANGE	IS 2062 Gr E250 BR	800NB, SORF PN 16	1
1	SHELL BODY	IS 2062 Gr E250 BR	813 O.D X 8THK	1

BILL OF MATERIAL

MARK	QTY	NOZ NB	RATING	FLANGE	SCH./THK	SERVICE	REMARK
N4	1	25NB	3000#	NPT	–	DRAIN	ANSI B16.11
N3	1	25NB	3000#	NPT	–	VENT	ANSI B16.11
N2	1	500NB	PN 16	SORF	8 THK	OUTLET	–
N1	1	500NB	PN 16	SORF	8 THK	INLET	–

NOZZLE SCHEDULE

* REV.	DATE	DESCRIPTION	PREP.BY	CHKD. BY	APPD. BY
00	16/01/2017	FIRST ISSUE	R.S.	V.R.	N.K.

CLIENT :

PROJECT : (4X270 MW) BHADRADRI THERMAL POWER PROJECT

DGN.	--	
APPD.	N.K.	TITLE : SIMPLEX BASKET STRAINER (500NB, PN 16)
CHKD.	V.R.	
DRN.	R.S.	DRG. NO. FE/SWL/GAD/SBKT/FR-4262

DATE : 16/01/2017	INSP.BY : CLIENT/TPIA	QTY.	02 NOS.
SCALE N.T.S.	BULLETIN NO. : -	JOB NO.	FR-4262
	SHEET : 1 OF 1	REV. NO.	00

DATASHEET OF Y STRAINER

SI No	Design Parameters	Description
1 Ma	nufacturer	DS ENGG/SANT .
2	Sizes	As Per Approved P&ID (PE-V0-411-554-A602)
3	Quantity	
4	Fluid handled	Water
5	Pressure rating	10
6	Rating	ANSI B 16.5, 150#, SORF
7	Design Capacity	As Per Approved P&ID
8	Degree of Filtration	1000 microns
9	Pressure drop at clean & 50% clogged condition	0.1 / 0.15 kg/cm²
10	Body	C.I IS:210,Gr. FG 200
11	Screen	SS 304
12	Gasket	CAF
13	Cover	C.I
14	Bolt	M.S
15	Plug	M.S

NOTE:

1. WORKING PRESSURE: 4.5 KG/CM2

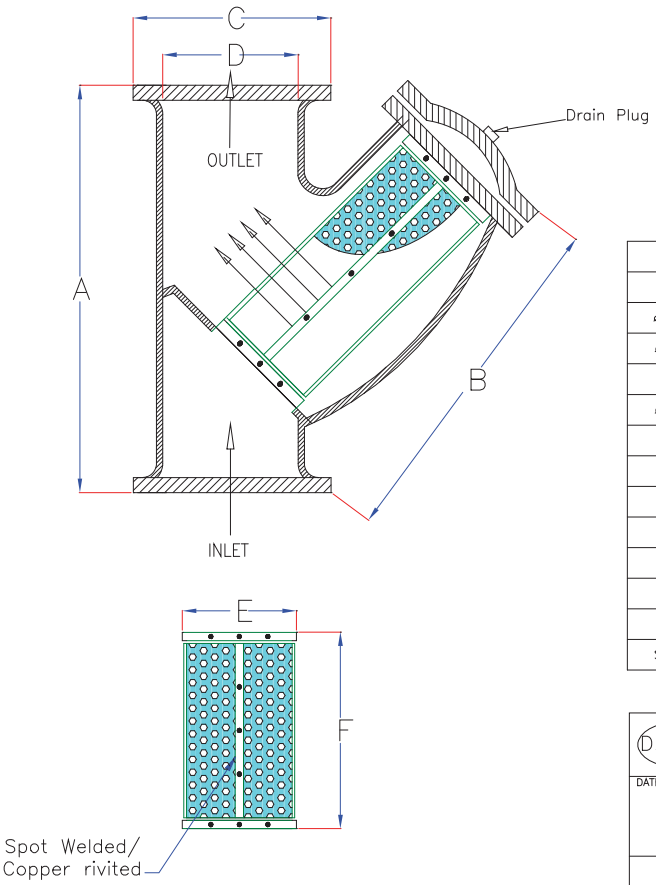

Note :–
All dimensions are in mm.
Material Body :– Cast Iron Grade 210.
Strainer/Basket :– SS/Brass/Bronze Perforated Sheet (24 Gague)With 3mm Hole.
Pressure Rating :– 21 kg/cm2
Flange :– BS–10, Table E

ø250	535	380	400	250	215	360				
ø200	480	310	335	200	195	295				
ø150	395	255	277	150	140	250				
ø125	372	242	255	128	135	235				
ø100	310	205	215	105	110	205				
ø80	265	175	185	66	75	180				
ø65	250	170	168	67	65	160				
ø50	195	137	150	52	50	130				
ø40	172	120	135	42	40	120				
ø32	155	107	120	33	35	110				
ø25	130	92	110	26	30	90				
SIZE	A	B	C	D	E	F				

D.S.

D.S ENGINEERING & MECHANICAL WORKS

DATE OF REVISION

Checked by

C.I.'Y'TYPE STRAINER

TECHNICAL DATA SHEET OF FIRE DAMPER

Doc.No : PE-V0-411-554-A206 / REV-01

SR NO.	DESCRIPTION	DETAILS
1.	Manufacturer Name	Ravistar (System air)
2.	Product Name	Fire Damper (Motorised) (Without sleeve,165 mm casing)
3.	Model	FSD
4.	Size	As per Approved Drawings
5.	Reference Code / Standard	UL 555 (Certified by CBRI)
6.	Material	Galvanised Steel
7.	Thickness of Material	Frame-16 SWG GI Sheet (1.6mm) Louver/Blade – 16 SWG GI Sheet (1.6 mm)
8.	No. Of Fire Damper and Size	As per approved ducting layout
9.	Type	Motorized
10.	Coating	Zinc Coating (120GSM)
11.	Mounting	Duct Collar (before wall / slab cut outs)
12.	Bush	Bronze bush with self lubrication
13.	Type of Actuator	Spring Return
14.	Make	Belimo
15.	Actuator	NFA =10 NM upto damper area 2 sq mtr SFA = 20 NM upto damper area 4 sq mtr
15A	Actuator Voltage (As per Actuato catalogue)	AC-24....240V, 50/60 Hz.
15B	Power Consumption (As per Actuator catalogue)	In operation : 6 W @ Nominal torque . At rest : 2.5 W
15C	Switch Type.	Inbuilt Auxiliary Switch.(2 NOS SPDT)
15 D	Auxiliary Contact .	Limit switches for open and closed position.
15 E	Single Voltage	220 V AC
16.	Control Panel and Temperature sensor	Voltage (operating) : 220V AC Frequency: 50-60 Hz. Output = 24V
17.	Fire Rating	90 Min Tested as per UL 555 / 2005
18.	Degree of protection	IP 54
19.	Angle of Rotation	Max 95^0
20.	Mode of Control	Open – Motor energized. Close - Motor de-energized & spring effect.
21	Power Supply required	230 V AC

NOTE:

1.Provision of manual overriding operation through latch is provided

2.Actuators shall be UL listed

3.Dampers are equipped with operators of sufficient power to control dampers, without flutter or hunting, through the entire operating range at air velocities at least 20 percent greater than maximum design velocity.

4.indicate Actuators are designed to provide a minimum of 200 percent of the torque required to operate the damper and to meet the air leakage criteria.

5.Closing of dampers in case of fire- Spring Return type

NOTE: DO NOT SCALE,ALL DIMENSIONS ARE IN mm

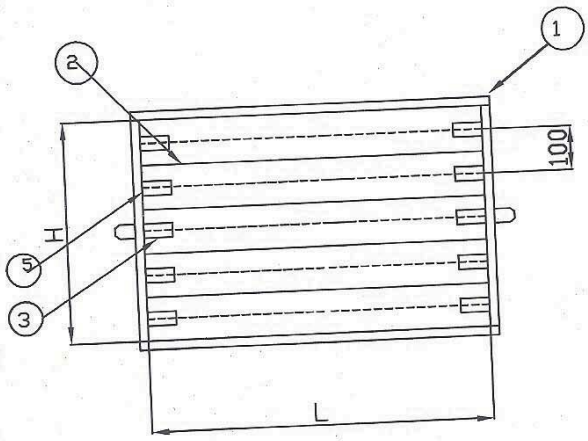

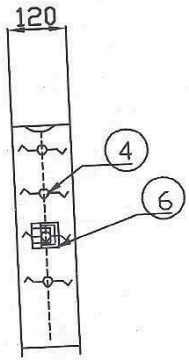

NOTES:

1. All sheet metal shall be processed for cleaning and degreasing & aluminium paint is done on welded joints.

2.Blade height-100 mm

3.Blade type-'V'type

4.Partition shall be provided On damper longer than : 1000mm

5.Tolerance : Fabrication±10mm/±1% of size which ever is more,Machining±2 mm

6. Neck Size Of The Fire Damper Is LxH

S.NO.	DESCRIPTION	MATERIAL
1.	FRAME	16 SWG(1.63mm) GALVANISED IRON SHEET
2.	BLADES	16 SWG(1.63mm) GALVANISED IRON SHEET
3.	SHAFTS	SHAFT IS 9550 GR 1 (CHROME PLATED)
4.	BEARING	SELF LUBRICATING BRONZE BUSH BEARING
5.	LINKAGE	M.S. IS-2062 (3 mm THICK PLATE)
6	ACTUATOR	SPACE FOR ACTUATOR

Systemair India Pvt.Ltd.

DAMPER CONTROL

CONTROL PANEL FOR SMOKE AND FIRE DAMPER

MODELS AVAILABLE

- CCCPAA -Control Panel for Actuator Coupled Dampers
- CCCPAS -Control Panel for Solenoid Coupled Dampers

FEATURES

(a) **ACTUATION SYSTEM**

Actuators **(Spring Return or non-spring return)** and **Solenoids** of any make can be controlled from the control panel. Please refer to **DAMPER ACTUATOR** Connections in the connection diagram for further details.

(b) **AIR HANDLING UNIT (A.H.U.) INTERLOCKING**

A.H.U. fans can be easily **put on or put off automatically / Manually** with the help of Control Panel. The A.H.U. Relay inside the panel de-energises immediately after recieving the **fault signal/ test signal** thereby putting off the A.H.U. contactor & hence putting off the A.H.U. motor, The A.H.U. Relay inside the panel will operate after 50 seconds (approx.) after resetting the panel.Please refer to **A.H.U.** connections in the connection diagram for further details.

(c) **WARNING SIGNAL CONNECTIONS**

A **Hooter/Alarm/Flasher** can be easily **put on or put off automatically / Manually** with the help of control panel. The **Hooter/Alarm/Flasher** Relay energises immediately after recieving a **fault signal / test signal** thereby putting on a **Hooter/Alarm/Flasher**. This relay resets immediately after resetting the panel. Please refer to **ALARM** connections in the connection diagram for further details.

(d) **EXTERNAL PANEL (FIRE PANEL) CONNECTIONS**

The control panel can be easily connected to any external panel (fire panel). A **normally closed point (N/C) and a common point (COM)** of any operative relay on the external

panel (fire panel) may be used for this purpose. Note that these relay points should be at **Zero potential**. The panel will go into fault mode if the N/C point leaves the COM. point. The panel can be reset manually (automatic reset version also available) once the N/C &COM points of the External Panel (Fire Panel) get reconnected. Please refer to **EXT PANEL** connections in the connection diagram

(e) **HEAT DETECTOR CONNECTIONS**

Heat detector (provided by M/s Systemair India Pvt. Ltd.) with every panel) is nothing but a **thermal cut out**. After reaching a particular temperature, this thermal cut out opens its electrical contacts. The control panel **senses the opening of these contactsof the heat detector and puts off the A.H.U. fans, puts on the warning signal and closes the damper** with the help of an actuator/solenoid. The panel can be reset manually (automatic reset version also available) once the heat detector resets. Please refer to **TEMP.** connections in the connection diagram for further details.

(f) **SMOKE DETECTOR CONNECTIONS**

A Duct Smoke detector (provided by M/s Systemair India Pvt. Ltd.) after sensing smoke, produces an **alarm signal** which is captured by the control panel and then the control panel **automatically puts off the A.H.U. Motor** by breaking the power supply to A.H.U. and also **puts on the warning signal** by connecting the power supply to a hooter/alarm/flasher. The control panel also gives a **closing signal** to the actuator / solenoid which is turn closes the damper. The Duct Smoke Detector & the panel can be reset manually only if the Duct Smoke Detector is wired through the control panel. Please refer to **SMOKE** connections in the connection diagram for further details. **SENSE**

(g) **TEST BUTTON**

The panel can be put into test mode i.e. to close the Fire / Smoke Dampers, put off the A.H.U. motor, put on the alarm signals once this button is **pressed momentarily**. Hence the purpose of this button is routine manual testing of the various devices functionality.

(h) **RESET BUTTON**

The panel can be reset i.e. open the Fire / Smoke Dampers, put on the A.H.U. motors **after some delay** & put off the alarm signals once this button is **pressed momentarily. THIS BUTTON CAN ALSO BE USED FOR PUTTING OFF JUST THE A.H.U. MOTOR ONLY.** Hence, when in normal (No-Fault) condition this button is pressed momentarily, the A.H.U. Relay inside the panel will de-energise for 50 seconds (approx.) & will energise after the lapse of the said period. Another function of this button is that the A.H.U. Motor will not start at all till this button is **kept pressed.** The A.H.U. Motor will start after 50 seconds (approx.) once this button is released.

(i) **VISUAL INDICATIONS**

(1) **Power Indication**

A yellow lamp glows indicating the presence of power supply.

(2) **Damper open Indication**

A green lamp glows if the damper is open.

(3) **Damper close Indication**

A red lamp glows if the damper is closed.

(4) **Fault (Alarm Indication)**

A red lamp glows instantly once the control panel recieves a signal from Smoke/Fire/Ext. panel or from test button.

(5) **A.H.U. Status Indication**

A green lamp glows if the A.H.U. Relay inside the panel is energised.

(ii) **AUDIO INDICATION**

A sharp buzzer will beep continously after the panel recieves a fault/test signal. It will stop beeping once the panel is reset.

☛ **Please note that Damper status indications (open/close) shall be available only if either AUX. Contacts of the actuator or micro switch contacts are connected to relevant connections inside the control panel. Please refer to the connection diagram for further details**

COMPATIBILITY

The control panel can be easily connected to the reputed actuator makes such as **BELIMO, SIEMENS, HONEYWELL, JOVENTA** etc.

Solenoids of **B.C.H** or any other make can be easily connected to the control panel.

ELECTRICAL PARAMETERS

(a) Operating voltage = 24V

(b) Power Consumption < 0.8 W

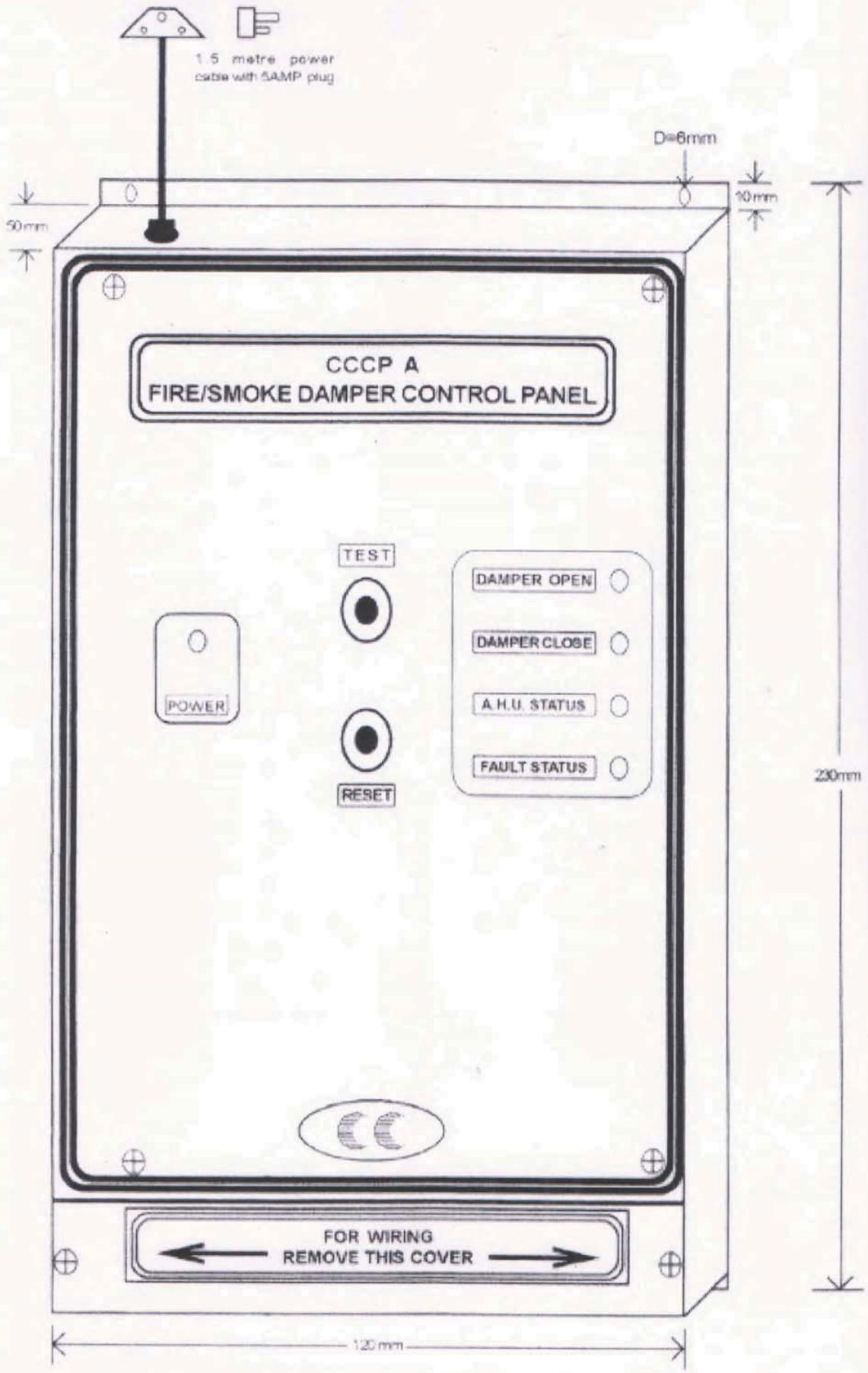
1.5 metre power
cable with 5AMP plug
D=6mm
10mm
50mm
CCCP A
FIRE/SMOKE DAMPER CONTROL PANEL
TEST
DAMPER OPEN
DAMPER CLOSE
A.H.U. STATUS
FAULT STATUS
POWER
RESET
230mm
FOR WIRING
REMOVE THIS COVER
120 mm

CONNECTION DIAGRAM

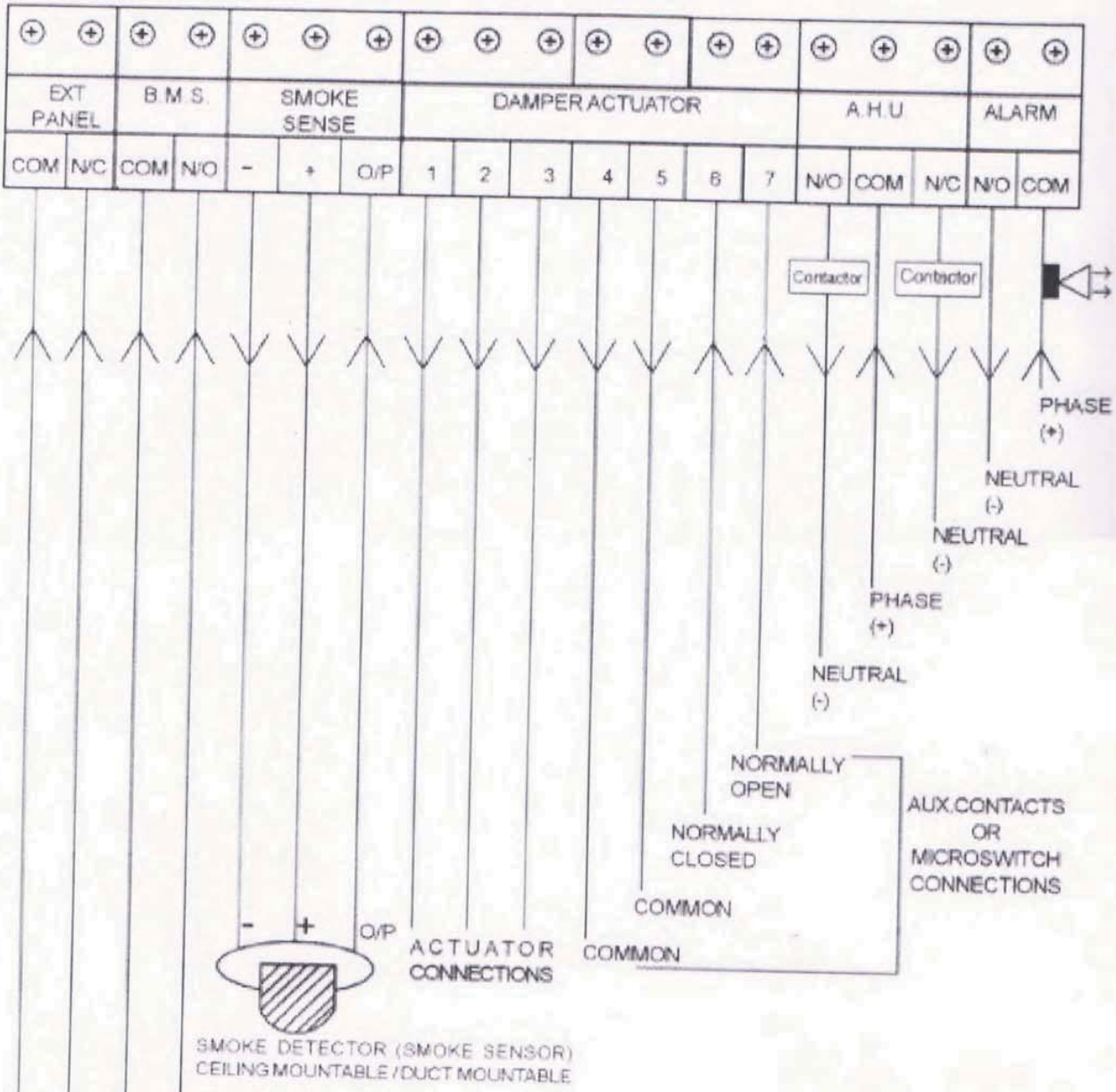

WIRES FROM THE COMMON POINT & NORMALLY OPEN POINT OF ANY OPERATIVE RELAY ON B.M.S. PANEL. NOTE THAT THESE TWO POINTS SHOULD BE AT ZERO POTENTIAL. ALSO, IN CASE B.M.S. PANEL IS NOT USED, KEEP THESE TWO POINTS OPEN.

WIRES FROM THE COMMON POINT & NORMALLY CLOSED POINT OF ANY OPERATIVE RELAY ON EXTERNAL PANEL (FIRE PANEL). NOTE THAT THESE TWO POINTS SHOULD BE AT ZERO POTENTIAL. ALSO, IN CASE EXTERNAL PANEL (FIRE PANEL) IS NOT USED, KEEP THESE TWO POINTS SHORTED WITH A PIECE OF WIRE.

- ◆ For spring return actuators, use connection nos. 1, 3, 4, 5, 6 & 7.
- ◆◆ For non-spring return actuators, use connection nos. 1, 2, 3, 4, 5, 6 & 7.
- ◆◆◆ Damper Status indications (OPEN/CLOSE) shall be available only if either AUX. contacts or microswitch connections are done at points 4,5,6 & 7.

Spring return actuator with emergency function for adjusting air dampers in ventilation and air conditioning systems in buildings

- **For air dampers up to approx. 2 m²**
- **Torque 10 Nm**
- **Nominal voltage AC 24 ... 240 V / DC 24 ... 125 V**
- **Control: Open-close**

Technical data

Electrical data	Nominal voltage	AC 24 ... 240 V, 50/60 Hz / DC 24 ... 125 V
	Nominal voltage range	AC 19,2 ... 264 V / DC 21,6 ... 137,5 V
	Power consumption In operation At rest For wire sizing	6 W @ nominal torque 2.5 W 9.5 VA
	Connection	Cable 1 m, 2 x 0.75 mm²
Functional data	Torque Motor Spring return	Min. 10 Nm @ nominal voltage Min. 10 Nm
	Direction of rotation	Can be selected by mounting L / R
	Manual override	With hand crank and interlocking switch
	Angle of rotation	Max. 95°∢, can be limited with adjustable mechanical end stop
	Running time Motor Spring return	≤75 s (0 ... 10 Nm) 20 s @ –20 ... 50°C / max. 60 s @ –30°C
	Sound power level Motor Spring return	≤45 dB (A) ≤62 dB (A)
	Service life	Min. 60,000 emergency positions
	Position indication	Mechanical
Safety	Protection class	**II** Totally insulated ⧈
	Degree of protection	IP54 NEMA2, UL Enclosure Type 2
	EMC Low-voltage directive	CE according to 2004/108/EC CE according to 2006/95/EC
	Certification	Certified to IEC/EN 60730-1 and IEC/EN 60730-2-14 cULus according to UL 60730-1A and UL 60730-2-14 and CAN/CSA E60730-1:02
	Mode of operation	Type 1.AA
	Rated impulse voltage	4 kV
	Control pollution degree	3
	Ambient temperature	–30 ... +50°C
	Non-operating temperature	–40 ... +80°C
	Ambient humidity	95% r.h., non-condensating
	Maintenance	Maintenance-free
Dimensions / Weight	Dimensions	See «Dimensions» on page 3
	Weight	Approx. 2.0 kg

Safety notes

- **The actuator is not allowed to be used outside the specified field of application, especially in aircraft or in any other airborne means of transport.**
- **Caution: Power supply voltage possible!**
- **It may only be installed by suitably trained personnel. Any legal regulations or regulations issued by authorities must be observed during assembly.**
- **The device may only be opened at the manufacturer's site. It does not contain any parts that can be replaced or repaired by the user.**
- **The cable must not be removed from the device.**
- **When calculating the required torque, the specifications supplied by the damper manufacturers (cross-section, design, installation site), and the air flow conditions must be observed.**
- **The device contains electrical and electronic components and is not allowed to be disposed of as household refuse. All locally valid regulations and requirements must be observed.**

Product features

Mode of operation

The actuator is equipped with a universal power module and can process supply voltages from AC 24 ... 240 V plus DC 24 ... 125 V.
The actuator moves the damper to the operating position at the same time as tensioning the return spring. The damper is turned back to the emergency position by spring force if the supply voltage is interrupted.

Simple direct mounting

Simple direct mounting on the damper spindle with a universal spindle clamp, supplied with an anti-rotation strap to prevent the actuator from rotating.

Manual override

Manual operation of the damper with the hand crank, locking in any position with the interlocking switch. Unlocking is manual or automatic by applying the operating voltage.

Adjustable angle of rotation

Adjustable angle of rotation with mechanical end stop.

High operational reliability

The actuator is overload-proof, requires no limit switches and automatically stops when the end stop is reached.

Electrical installation

Wiring diagram

Notes
- Caution: Power supply voltage possible!
- Parallel connection of other actuators possible. Note the performance data.

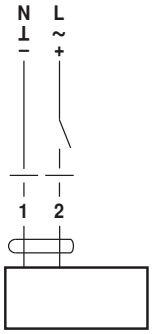

Cable colours:
1 = blue
2 = brown

Accessories

	Description	Data sheet
Electrical accessories	Auxiliary switch unit S2A-F *	T2 - S2A-F
	Feedback potentiometer unit P200A-F *	T2 - P200A-F
Mechanical accessories	Various accessories	

* further versions on request

Dimensions [mm]

Dimensional drawings

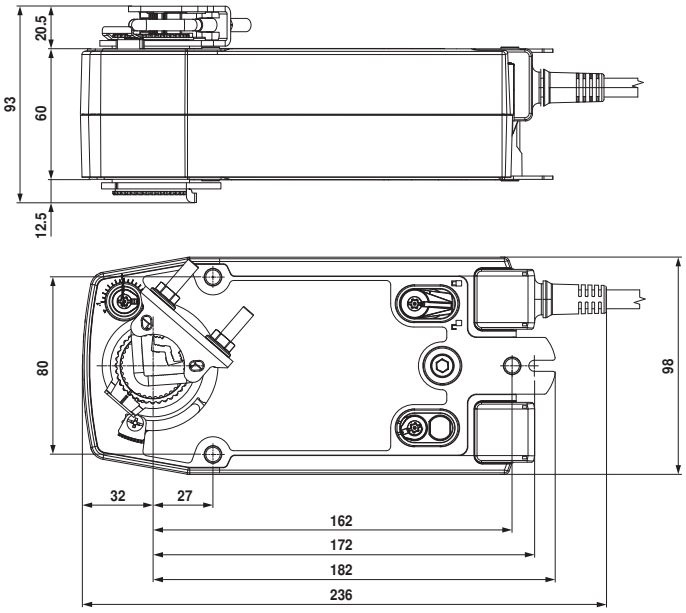

Variant 1a:
¾"-spindle clamp (with insertion part) EU Standard

Damper spindle	Length			
	≥85	10 ... 22	10	14 ... 25.4
	≥15			

Variant 1b:
1"-spindle clamp (without insertion part) EU Standard

Damper spindle	Length		
	≥85	19 ... 25.4 (26.7)	12 ... 18
	≥15		

Variant 2:
½"-spindle clamp (optional via configuration)

Damper spindle	Length		
	≥85	10 ... 19	14 ... 20
	≥15		

71127-00001.F

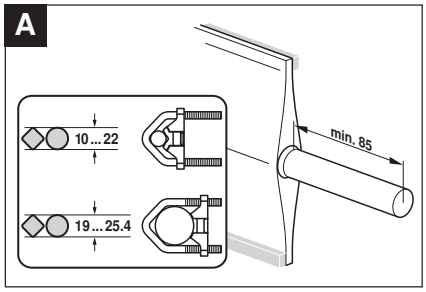

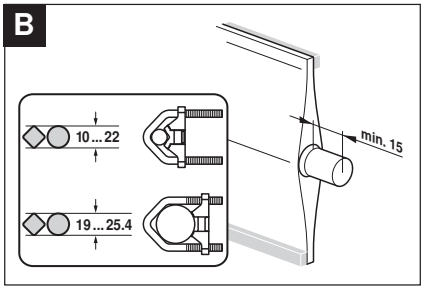

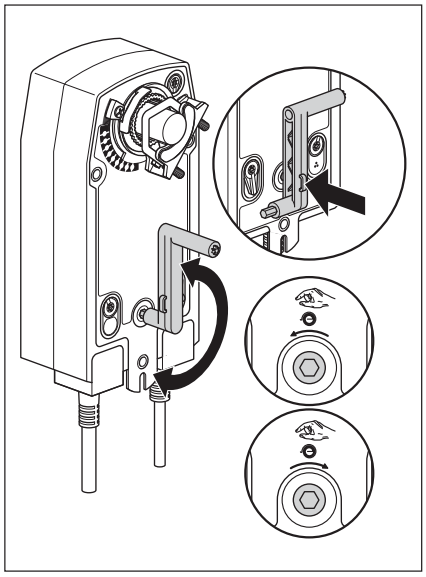

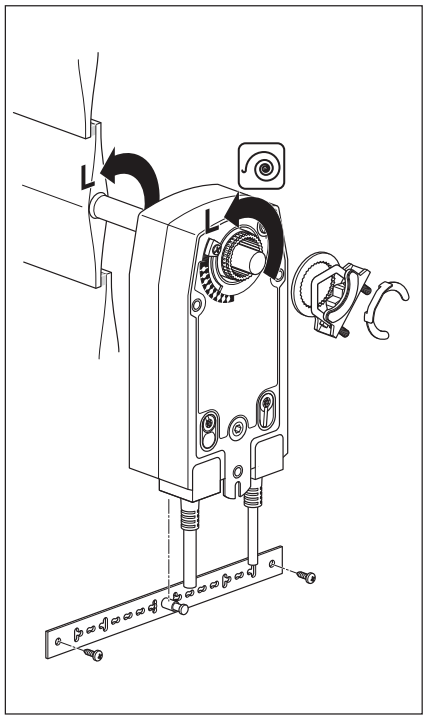

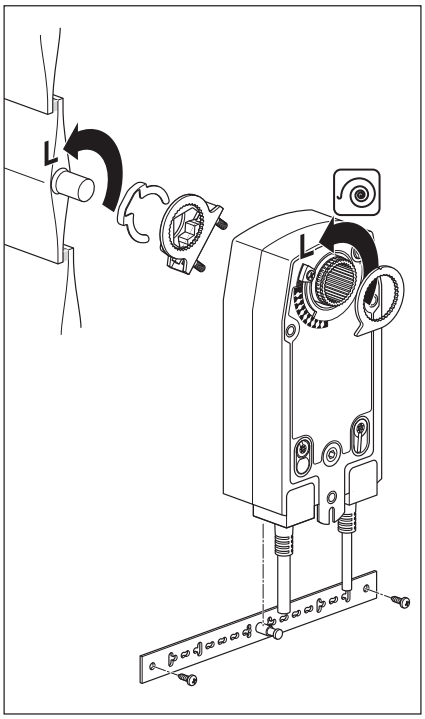

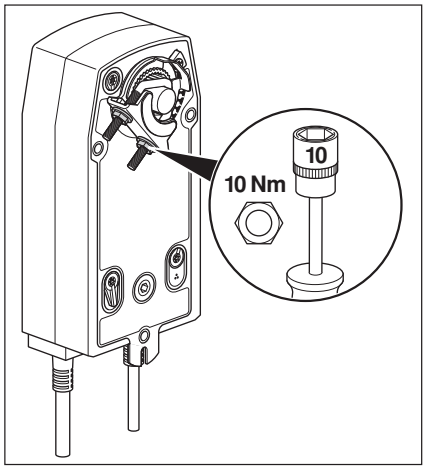

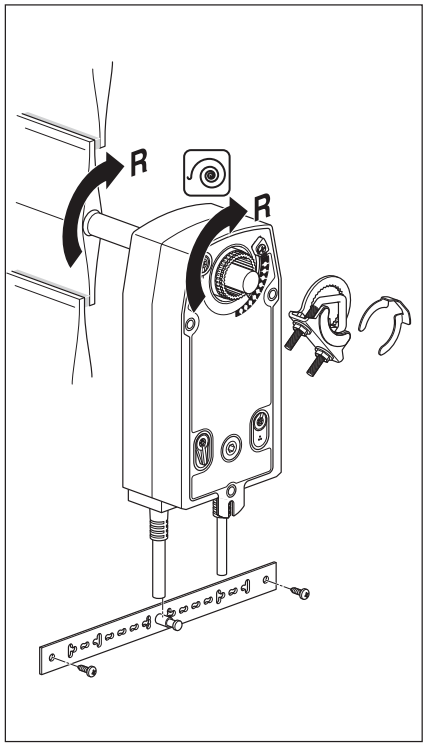

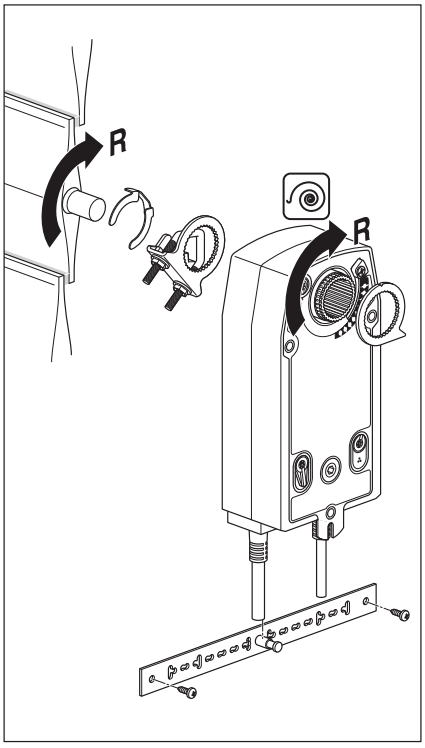

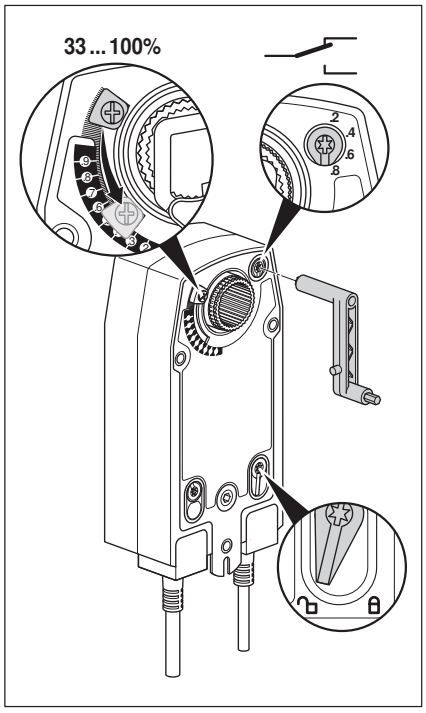

AC 24 V / DC 24 V

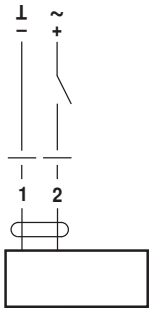

NF24A
SF24A

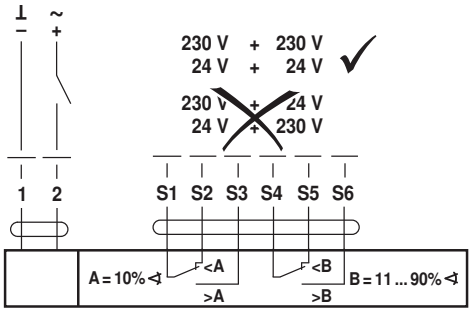

NF24A-S2
SF24A-S2

AC 230 V ⚠

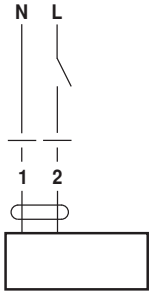

NF230A
SF230A

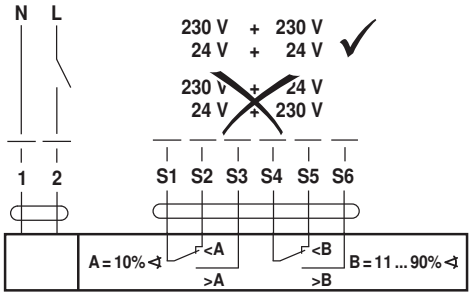

NF230A-S2
SF230A-S2

AC 24 ... 240 V / DC 24 ... 125 V ⚠

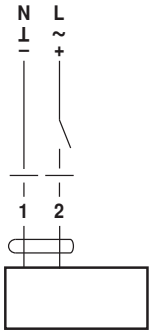

NFA
SFA

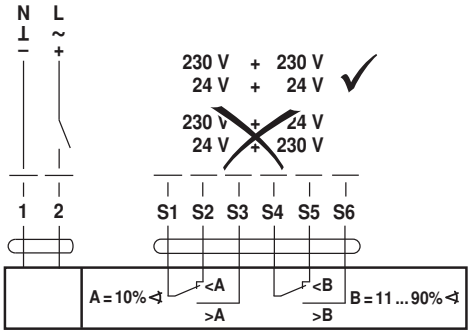

NFA-S2
SFA-S2

Spring return actuator with emergency function for adjusting air dampers in ventilation and air conditioning systems in buildings

- **For air dampers up to approx. 4 m²**
- **Torque 20 Nm**
- **Nominal voltage AC 24 ... 240 V / DC 24 ... 125 V**
- **Control: Open-close**

Technical data

Electrical data	Nominal voltage	AC 24 ... 240 V, 50/60 Hz / DC 24 ... 125 V
	Nominal voltage range	AC 19,2 ... 264 V / DC 21,6 ... 137,5 V
	Power consumption In operation	7 W @ nominal torque
	At rest	3.5 W
	For wire sizing	18 VA
	Connection	Cable 1 m, 2 x 0.75 mm²
Functional data	Torque Motor	Min. 20 Nm @ nominal voltage
	Spring return	Min. 20 Nm
	Direction of rotation	Can be selected by mounting L / R
	Manual override	With hand crank and interlocking switch
	Angle of rotation	Max. 95°∢, can be limited with adjustable mechanical end stop
	Running time Motor	≤75 s (0 ... 10 Nm)
	Spring return	20 s @ –20 ... 50°C / max. 60 s @ –30°C
	Sound power level Motor	≤45 dB (A)
	Spring return	≤62 dB (A)
	Service life	Min. 60,000 emergency positions
	Position indication	Mechanical
Safety	Protection class	**II** Totally insulated ⧈
	Degree of protection	IP54 NEMA2, UL Enclosure Type 2
	EMC Low-voltage directive	CE according to 2004/108/EC CE according to 2006/95/EC
	Certification	Certified to IEC/EN 60730-1 and IEC/EN 60730-2-14 cULus according to UL 60730-1A and UL 60730-2-14 and CAN/CSA E60730-1:02
	Mode of operation	Type 1.AA
	Rated impulse voltage	4 kV
	Control pollution degree	3
	Ambient temperature	–30 ... +50°C
	Non-operating temperature	–40 ... +80°C
	Ambient humidity	95% r.h., non-condensating
	Maintenance	Maintenance-free
Dimensions / Weight	Dimensions	See «Dimensions» on page 3
	Weight	Approx. 2.2 kg

Safety notes

- **The actuator is not allowed to be used outside the specified field of application, especially in aircraft or in any other airborne means of transport.**
- **Caution: Power supply voltage possible!**
- **It may only be installed by suitably trained personnel. Any legal regulations or regulations issued by authorities must be observed during assembly.**
- **The device may only be opened at the manufacturer's site. It does not contain any parts that can be replaced or repaired by the user.**
- **The cable must not be removed from the device.**
- **When calculating the required torque, the specifications supplied by the damper manufacturers (cross-section, design, installation site), and the air flow conditions must be observed.**
- **The device contains electrical and electronic components and is not allowed to be disposed of as household refuse. All locally valid regulations and requirements must be observed.**

Product features

Mode of operation
The actuator is equipped with a universal power module and can process supply voltages from AC 24 ... 240 V plus DC 24 ... 125 V.
The actuator moves the damper to the operating position at the same time as tensioning the return spring. The damper is turned back to the emergency position by spring force if the supply voltage is interrupted.

Simple direct mounting
Simple direct mounting on the damper spindle with a universal spindle clamp, supplied with an anti-rotation strap to prevent the actuator from rotating.

Manual override
Manual operation of the damper with the hand crank, locking in any position with the interlocking switch. Unlocking is manual or automatic by applying the operating voltage.

Adjustable angle of rotation
Adjustable angle of rotation with mechanical end stop.

High operational reliability
The actuator is overload-proof, requires no limit switches and automatically stops when the end stop is reached.

Electrical installation

Wiring diagram

Notes
- Caution: Power supply voltage possible!
- Parallel connection of other actuators possible. Note the performance data.

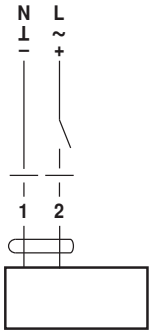

Cable colours:
1 = blue
2 = brown

Accessories

	Description	Data sheet
Electrical accessories	Auxiliary switch unit S2A-F *	T2 - S2A-F
	Feedback potentiometer unit P200A-F *	T2 - P200A-F
Mechanical accessories	Various accessories	

* further versions on request

Dimensions [mm]

Dimensional drawings

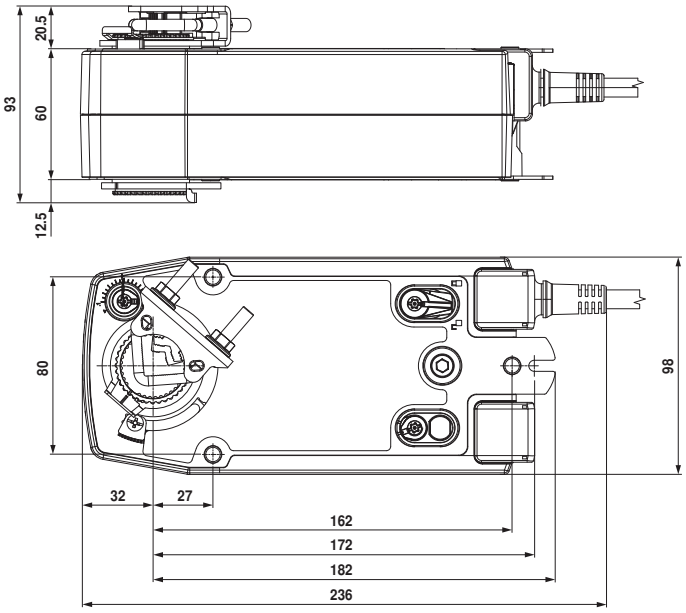

Variant 1a:
¾"-spindle clamp (with insertion part) EU Standard

Damper spindle	Length			
	≥85	10 ... 22	10	14 ... 25.4
	≥15			

Variant 1b:
1"-spindle clamp (without insertion part) EU Standard

Damper spindle	Length		
	≥85	19 ... 25.4 (26.7)	12 ... 18
	≥15		

Variant 2:
½"-spindle clamp (optional via configuration)

Damper spindle	Length		
	≥85	10 ... 19	14 ... 20
	≥15		

71127-00001.F

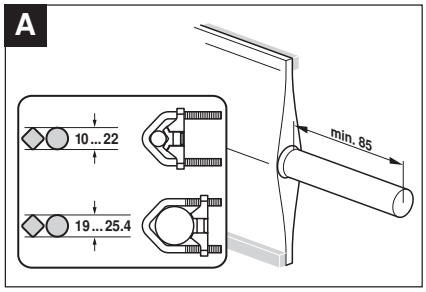

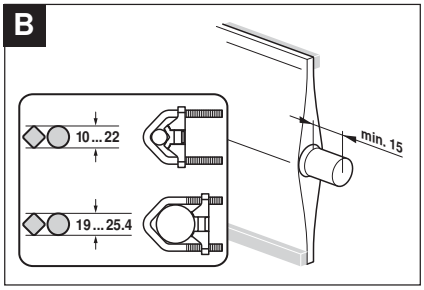

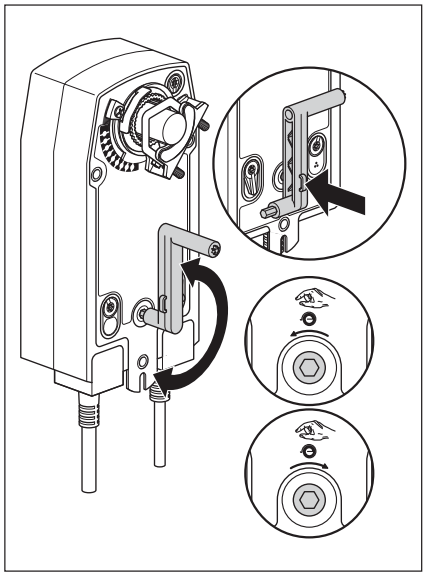

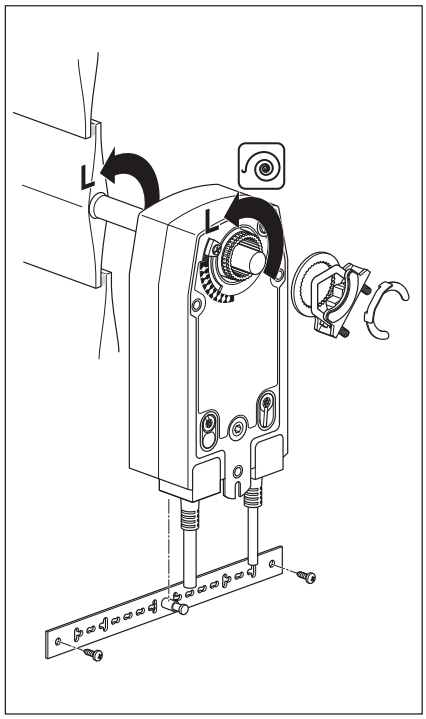

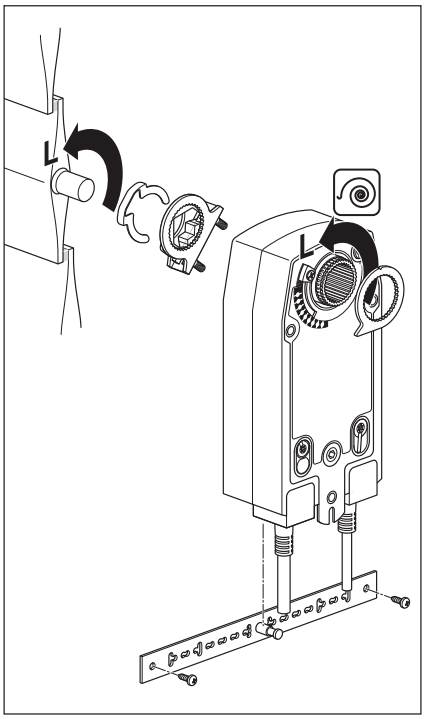

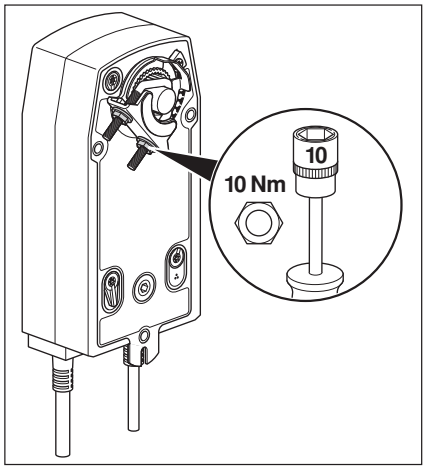

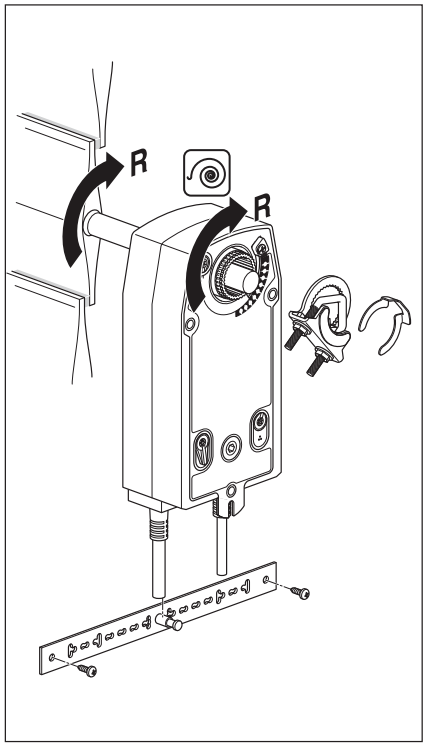

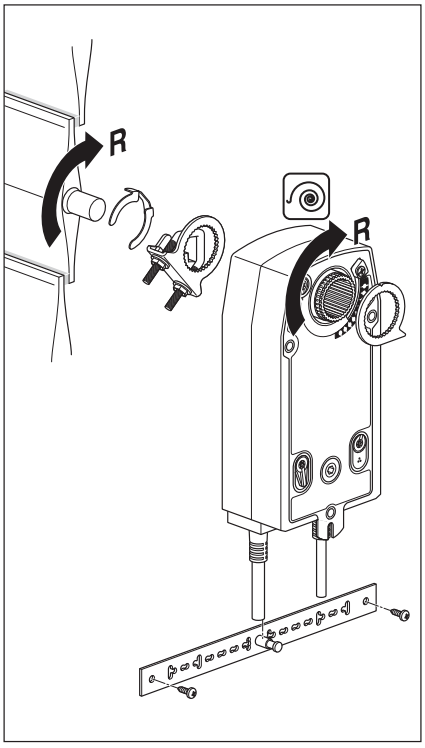

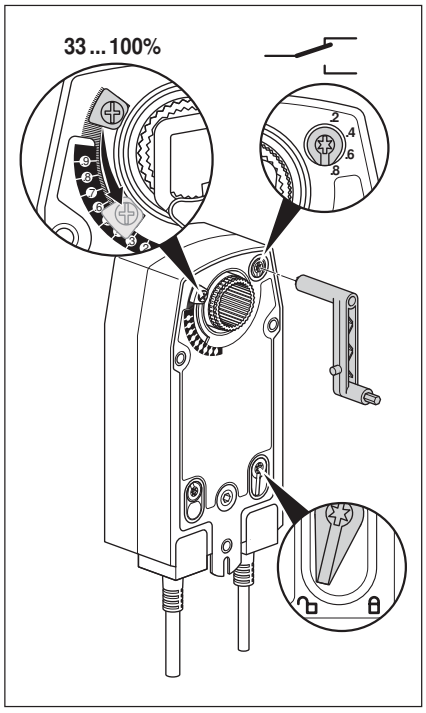

AC 24 V / DC 24 V

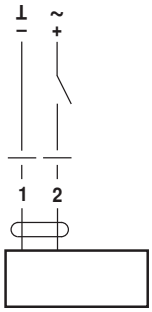

NF24A
SF24A

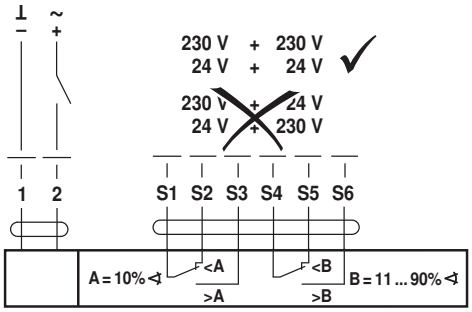

NF24A-S2
SF24A-S2

AC 230 V ⚠

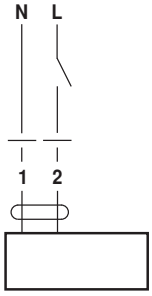

NF230A
SF230A

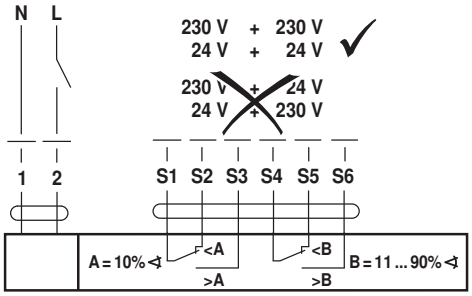

NF230A-S2
SF230A-S2

AC 24 ... 240 V / DC 24 ... 125 V ⚠

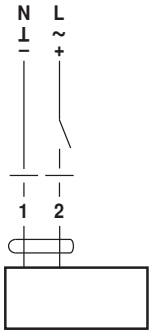

NFA
SFA

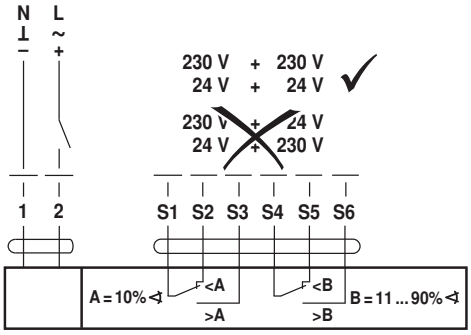

NFA-S2
SFA-S2

UNLESS OTHERWISE SPECIFIED ALL DIMENSION ARE IN m.m.

REV NO.	DATE	REVISION	REV. BY

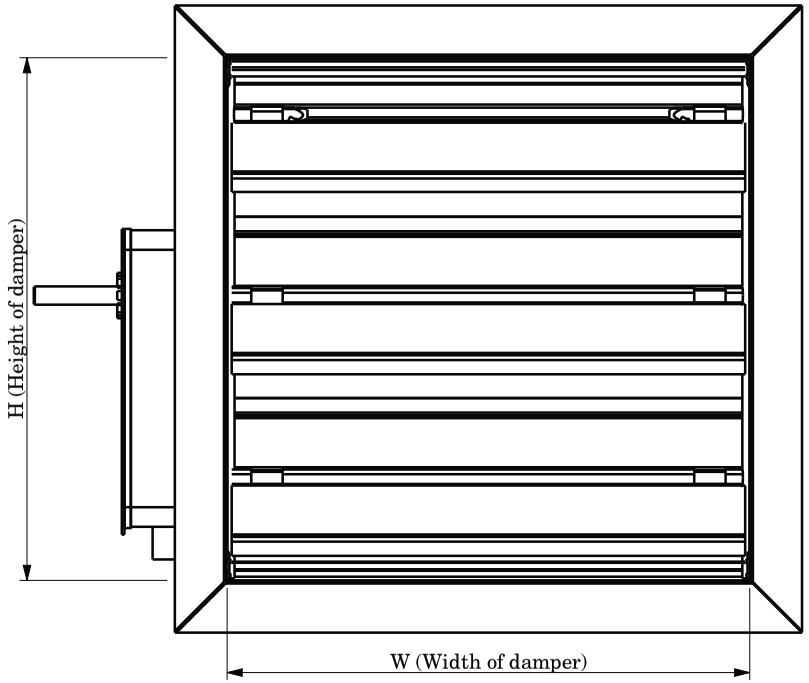

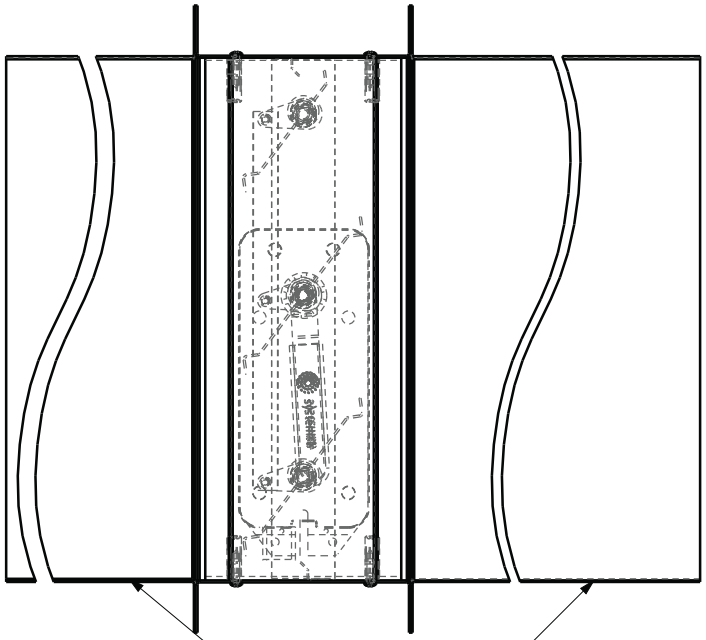

MOTORIZED FIRE DAMPER
INSTALLED IN DUCT

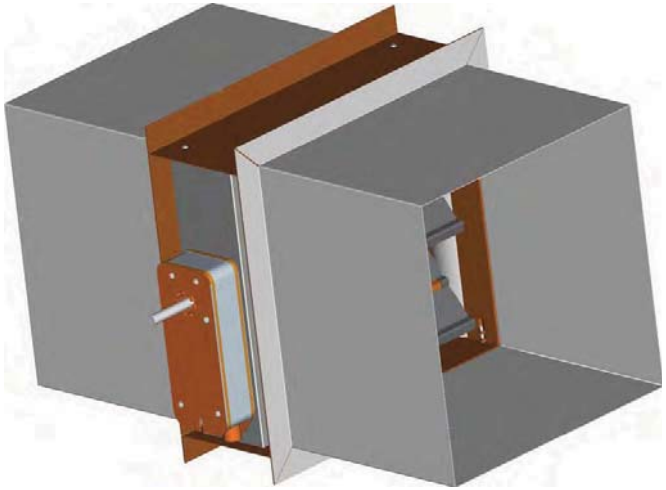

MASS PROPERTIES:	
VOLUME (mm³)	-
WEIGHT (kg)	-
No. of SC/CC	
SC	
CC	

PART DESCRIPTION:				REMOVE SHARP EDGES		DRAWING No.:		REV NO.:
MOTORIZED FIRE DAMPER WITHOUT SLEEVE (CBRI STD)				DATE: 13-May-2015		SIPL/ADP/GA/1637		-
MATERIAL:	SURFACE FINISH:	SCALE:	DRN. BY:	P.K	CHKD. BY:	DALIP	APPD. BY:	-
-	-	N.T.S.						

systemair

SYSTEMAIR INDIA PVT.LTD.

THIS DRAWING AND DESIGN IS A PROPERTY OF SYSTEMAIR INDIA PVT. LTD. IS CONFIDENTIAL INFORMATION.SUBJECTED TO THEIR RECALL . THE DOCUMENT MUST NOT BE COPIED WITHOUT THEIR WRITTEN PERMISSION.CONTRAVENTION WILL BE PROSECUTED.

SCALE: 0.150

TOLERANCE LIMIT UNLESS SPECIFIED	
0.5 - 6 = ±0.1	120 - 315 = ±1.0
6 - 30 = ±0.2	315 - 1000 = ±2.0
30 - 120 = ±0.4	1000 - 2000 = ±4.0

FILE PATH: - - - - - - - -

ALL DIMENSIONS ARE IN M.M. (IF IN DOUBT PLS. ASK DON'T SCALE THE DRAWING)

Chandra control Make (24V & 230 V)

Belimo
Actuator Modulating and Spring Return.

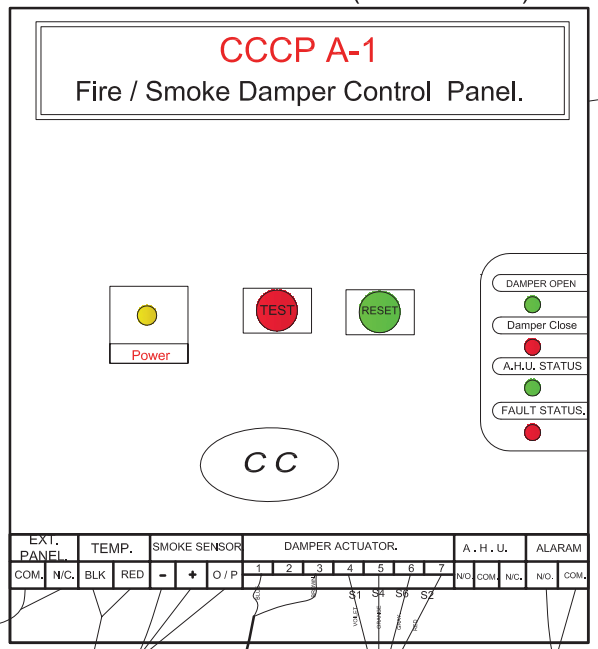

SFU-24
1) S2- Red-7
2) S6-Gray-6
3) s4-Orange - 5
4) S1- Voilet-4
5) s5- White - No connection.
6) s3 - Pink - No connection.

SF 24 SR
1) S2 - Red-1
2) S1- Black - 3
3) S3- White - 4
4) S5- White -7

NFU
1) Blue = 1
2) Brown = 3

TEMPERATURE SENSOR 165F° Or 74°C

BMS Connection.

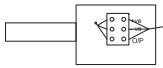

Smoke Sensor.

Buzzer or Light bulb Indication..

TWO MICRO SWITCH WIRE CONNECTION,
IT IS USED FOR INDICTION PURPOUSE
DAMPER OPEN OR CLOSED CODTION INDICATEED ON
CONTROL PANEL RED AND GREEN LIGHT

PART/No.:-			MATERIAL:-	DATE:-		DRAWING No.:-	
Wiring Diagram for Control panel and Belimo Actuator.				9/06/2011		20120305-01	
TOLERANCE:-	SCALE:-	DRN. BY:-	&modeled_by	CHKD. BY:-	&checked_by	APPD. BY:-	&approved_by
	&scale		Bhushan				
systemair RAVISTAR		RAVISTAR INDIA PVT.LTD.					

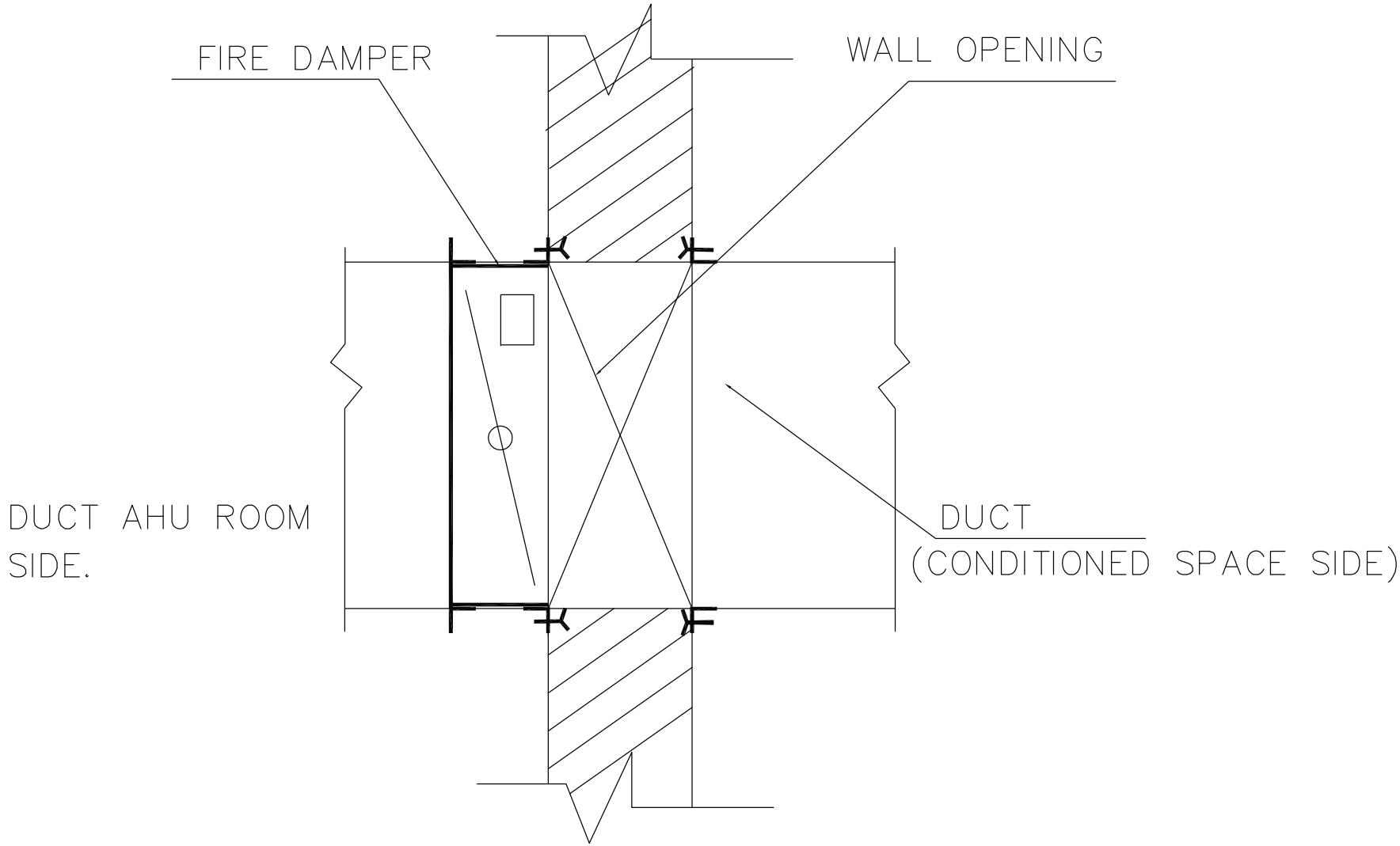

S:\NEY\DRG\BORDER\PROJ_A3E.DWG

AIR WASHER & UAF FANS MOTORS

	Indent no. - DB/07/0206	
	LT MOTOR DATA SHEET	**BHEL BHADRADRI**
CLAUSE		
No.	PROJECT & PACKAGE:	IE-3 MOTORS
1	**GENERAL**	
i	Manufacturer & country of origin	Marathon Electric Motors (India) Limited
ii	Equipment driven by motor	AIR WASHE FAN
iii	Motor type	Sq.Cage
iv	Quantity	As per Project requirement
2	**DESIGN & PERFORMANCE DATA**	
i	Frame size	TCA225M
ii	Type of duty	S1
iii	Type of enclosure & method of cooling / Degree of protection	TEFC / IC 411 / IP 55
iv	Applicable standard to which motor generally confirms	IS/IEC-60034-2-1
v	Type of mounting	IMB3
vi	Direction of rotation viewed from DE	Bi-Directional
vii	Standard continuous rating at 40 deg.C ambient temp. as per Indian Std. (KW)	N.A. as motor is designed for 50 Deg.C
viii	Derated rating for specified normal condition i.e. 50 deg. C ambient (KW)	45
ix	Rated voltage (volts) & Rated frequency(Hz)	415 / 50
x	Permissible variation of	
a	voltage (volts)	± 10%
b	Frequency (Hz)	± 5%
c	Combined voltage & frequency	10%
xi	Minimum permissible starting voltage(V)	85% OF RATED VOLTAGE
xii	Rated speed at rated voltage & frequency	1484
xiii	At rated voltage and frequency	
a	Full load current (A)	77.3
b	No load current (A) (Approx.)	27.3
xiv	Power factor at	
a	100% load / 75% load / 50% load	0.86 / 0.82 / 0.72
b	No load (Approx.)	0.046
c	Starting (Approx.)	0.411
xv	Efficieny (%)at rated voltage & frequency	
a	100% load	94.2
b	75% load	94.2
c	50% load	94.3
xvi	Starting current % FLC at	
a	100% voltage	750%
b	85% voltage	638%
c	80% voltage	600%
xvii	Starting time with minimum permissible Voltage	
a	without driven equipment coupled	< 2 Secs.
b	with driven equipment coupled (sec)	9.7
xviii	Safe stall time with 110% of rated voltage	
a	From hot condition in sec.	11
b	From cold condition in sec.	23
xix	Torques - % FLT	
a	Starting torque at min. permissible V starting torq at rated V (kg-mtr.)	53.93
b	Pull up torque at rated voltage (kg-mtr.)	63.45
c	Pull out torque (kg-mtr.)	91.46
d	Min. accelerating torque available	10% of rated Torque
e	Rated torque - kg-m	29.5
xx	Stator winding resistance per Ph. (Ω @ 20℃) (Indicative)	0.1555
xxi	GD square value of motor - kg-m²	3.084
xxii	No. of permissible successive starts when motor is in hot / cold condition	2 / 3
xxiii		
a	Locked rotor KVA input (Inclusive of Tolerance)	500
b	Locked rotor KVA / KW (Inclusive of Tolerance)	11

LT MOTOR DATA SHEET		BHEL BHADRADRI
CLAUSE		
No.	PROJECT & PACKAGE:	IE-3 MOTORS
xxiv	Bearings	
a	Type	DE : Roller / NDE : BALL
b	Manufacturer	SKF, FAG or equivalent
c	Self lubricated or forced lubricated	Self Lubricated
d	Recommended lubricants	Lithium based grease
e	Guaranteed life in hours	40,000
f	Whether dial type thermometer provided	NA
g	Oil pressure guage/switch	NA
i	range	NA
ii	Contact Nos. and ratings	NA
iii	Accuracy	NA
xxv	Vibration	
a	Velocity mm/s	AS PER IS 12075
b	Displacement microns	AS PER IS 12075
xxvi	Noise level db(A) at 1 m at no load	AS PER IS 12065
3	**CONSTRUCTIONAL FEATURES**	
i	Stator winding insulation	
a	Class & type	F (temperature rise limited to class B) / Laminated Nomex
b	Tropicalised (Yes/No)	YES
c	Temperature rise over specificed max.	
	i. cold water temp. of 38 deg. C	NA
	ii. Ambient air 50 deg. C.	70° C
d	Method of temperature measurement	RESISTANCE METHOD
e	Stator winding connection	Delta
f	Number of terminals braught out	6
ii	Type of terminal box for	
a	Stator leads	Detachable - Non Phase segregated
b	space heater	NA
c	Temperature detectors	NA
d	instrument switch etc.	NA
iii.	For main terminal box	
a	Location	As per GAD
b	Entry of cables	As per GAD
c	Recommended cable size (to be matched with cable size envisaged by owner)	3C-95 SQ MM AL, XLPE ARMOURED
d	Fault level	50KA for 0.25Sec with suitable back up fuses
iv	Temperature detector for stator winding	NA
a	Type	NA
b	Nos. provided	NA
c	Location	NA
d	make	NA
e	resistance value at 0 deg. C (ohms)	NA
v	space heaters	
a	Number	1
b	Location	Wdg. Overhang
c	Power requirement (Watt)	60
vi	Paint shade	Shade No. 631 as per IS:5
vii	Approx. Weight of	
a	Motor stator	247
b	Motor rotor	164
c	Total weight (kg)	411
4	**CHARACTERISTIC CURVES**	
i	Torque speed characteristic of the motor	Enclosed
ii	Calibration characteristic of platinum type resistance temperature detector	N.A.
iii	Calibration characteristic of platinum BTD	
iv	Thermal withstand characteristic	Enclosed
v	Starting current vs. time	-
vi	Starting current vs. speed	Enclosed
vii	Neg. sequence current vs. time	N.A.
viii	PF & Efficiency Vs Load.	Enclosed
NOTE :		

1) ALL PERFORMANCE FIGURES ARE SUBJECT TO IS/IEC TOLERANCES.
2) Fans to be started at closed damper condition only.

Thermal Withstand Curve 100% Voltage

Date:
Customer:
Attention:
Submitted by:

marathon® Motors TerraMAX

TCA 225MA04

IE3 Efficiency

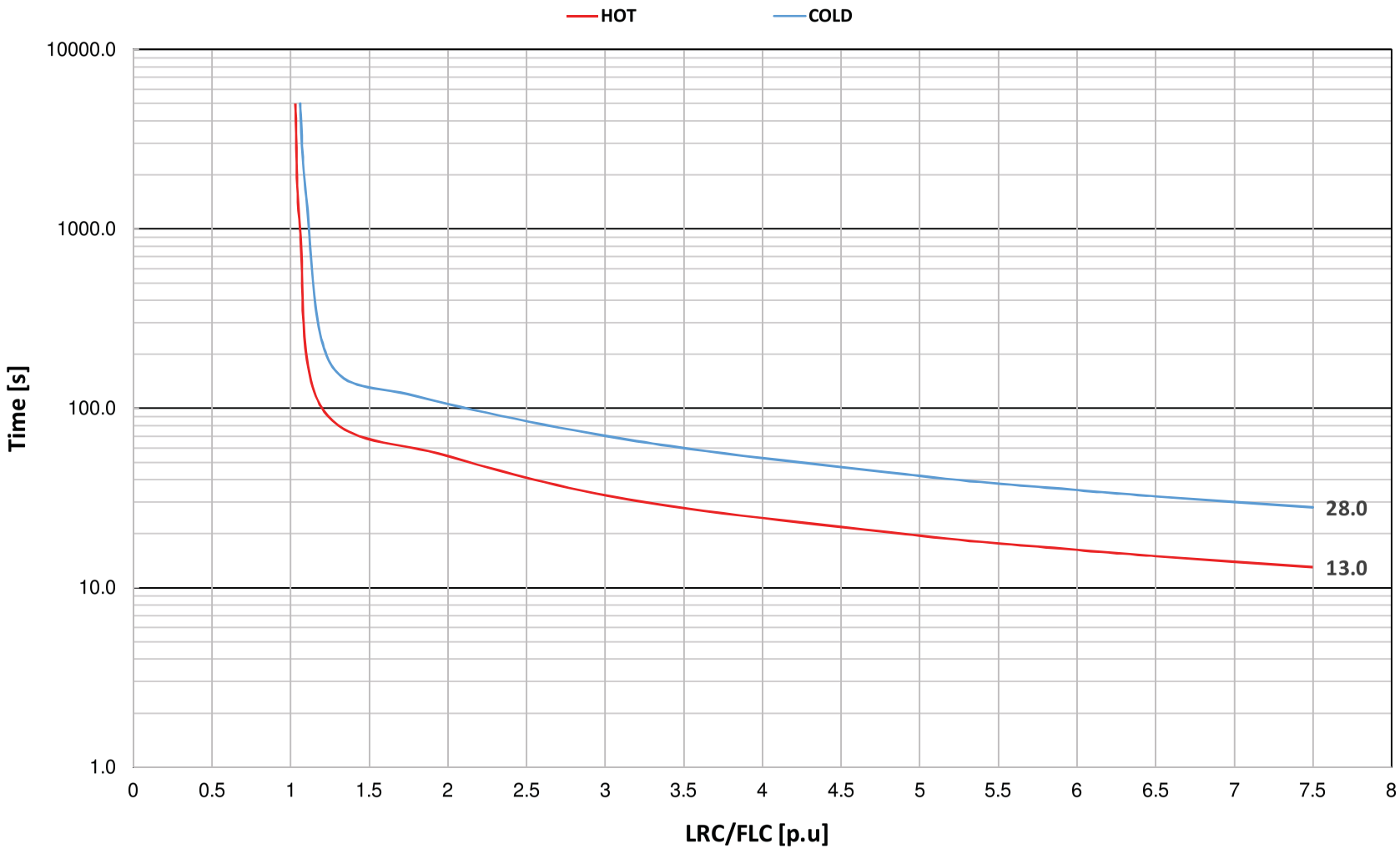

Performance Curves

Date:
Customer:
Attention:
Submitted by:

marathon® TerraMAX™ Motors

TCA 225MA04

IE3 Efficiency

Motor Load Data

Load	0%	25%	50%	75%	100%
Current (Amps)	27.3	32.5	45.8	60.4	77.3
Torque (Nm)	0.00	71.6	144	216	288
RPM	1500	1496	1492	1488	1484
Efficiency (%)		91.7	94.3	94.2	94.2
P.F. (%)	4.6	52.3	72.2	81.9	85.7

Motor Speed - Torque Data

	LR	Pull-Up	BD	Rated	Idle
Speed (RPM)	0	214	1365	1484	1500
Current (Amps)	580	522	314	77.3	27.3
Torque (p.u.)	2.53	2.13	3.1	1.00	0.00

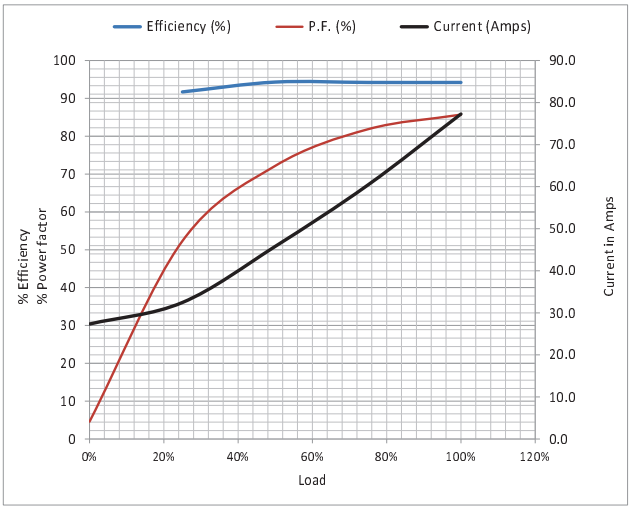

Information Block

kW	45.0	
Sync. RPM	1500	
Frame	225M	
Enclosure	TEFC	
Voltage	415	V
Frequency	50	Hz
Duty	S1	
Ambient	50	° C
Elevation	1,000	meters
Moment of Inertia	0.7712	kg-m²
Motor Weight	411	Kgs

Additional Specifications:

Speed -Torque Curve

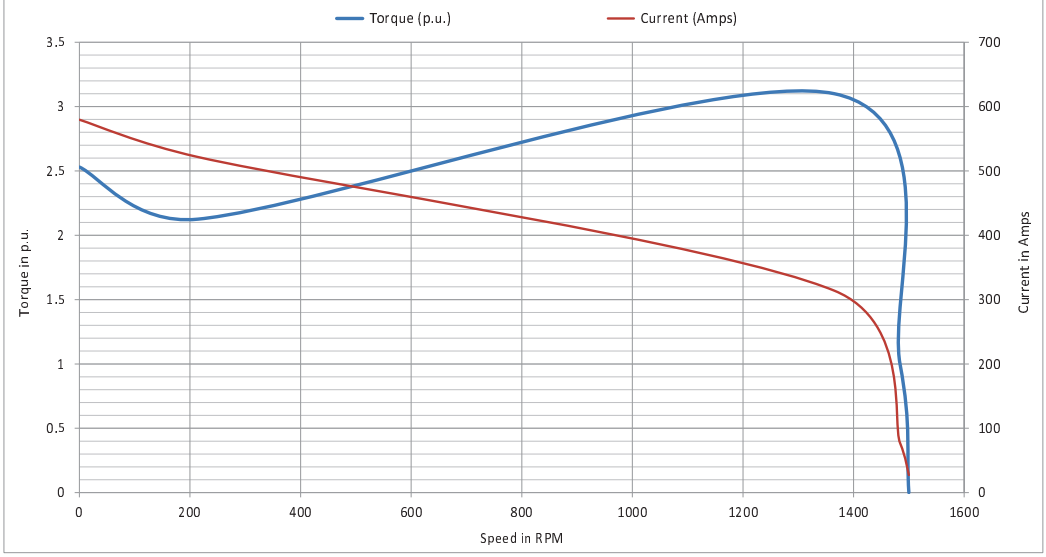

Uncontrolled Copy

OUTLINE

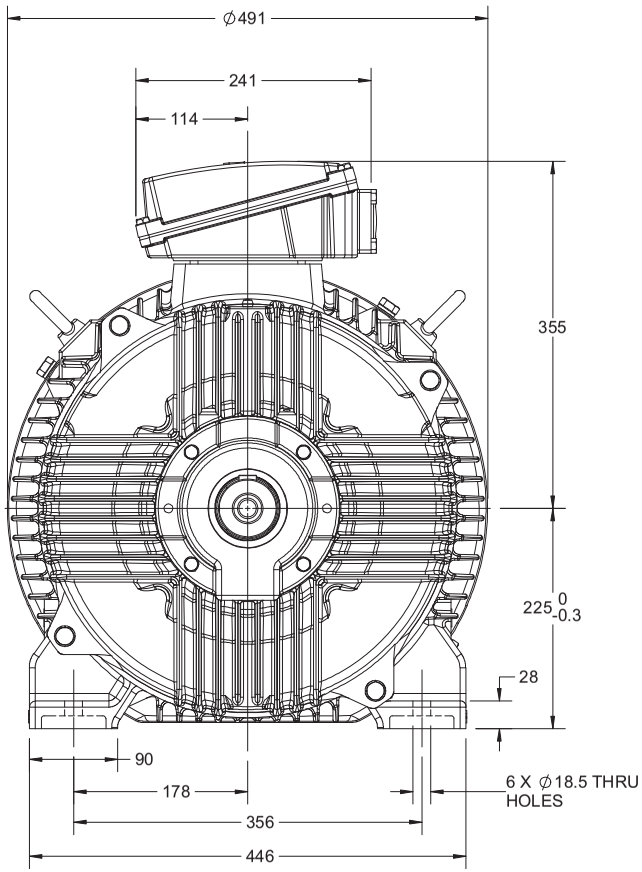

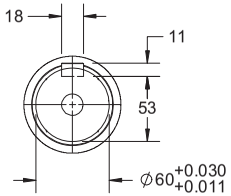

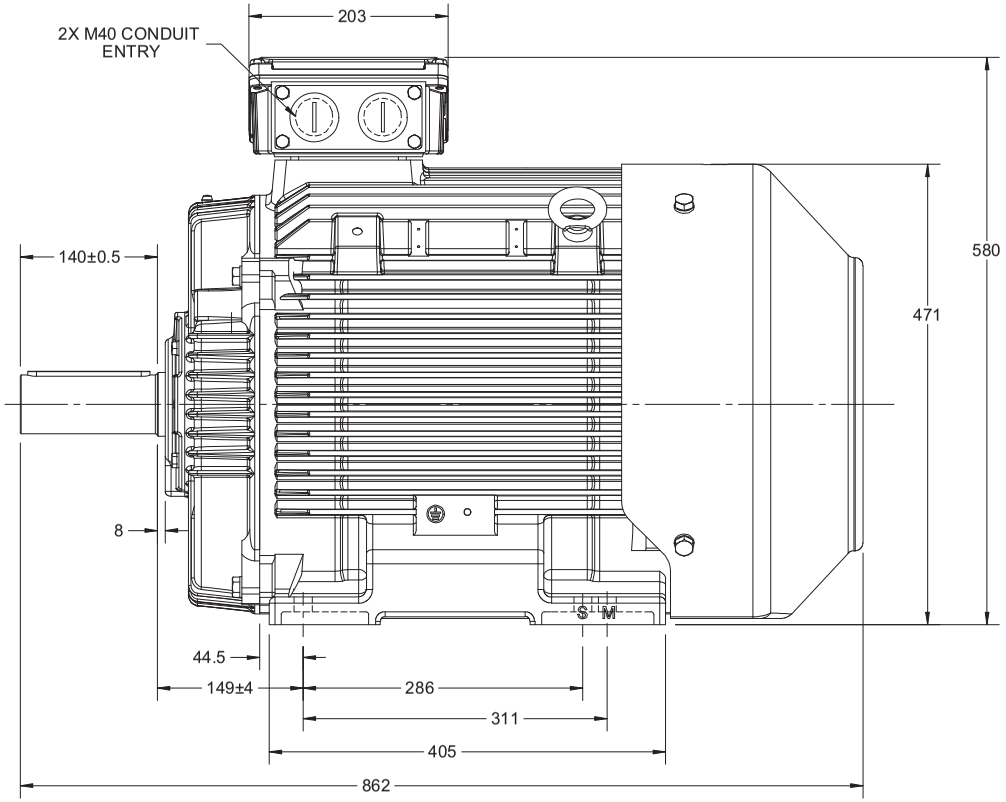

DRAWING REVISION B	REVISION BY UDAY	DATE 24/08/2017	DRAWN BY SDV	marathon Motors
ECO ECO-0124939	APPROVED BY JAY	DATE 24/08/2017	DATE 18/07/2014	
ECO DESCRIPTION UPDATED DESCRIPTION TO TCA\QCA			APPROVED BY SBD	DESCRIPTION OUTLINE 225FR-B3 MTG MOTOR TYPE: TCA\QCA
			DATE 18/07/2014	
			REFERENCE	MATERIAL / PROCESS/FINISH
			THIRD ANGLE PROJECTION	SIZE B / DRAWING NUMBER 0222500462 / SHEET 1 OF 1

COPYRIGHT REGAL BELOIT AMERICA, INC. ALL RIGHTS RESERVED.
PROPRIETARY AND CONFIDENTIAL INFORMATION - THIS DOCUMENT IS THE PROPERTY OF REGAL BELOIT AMERICA, INC. ("OWNER") AND CONTAINS OWNER'S PROPRIETARY INFORMATION. ANY PERSON, CORPORATION OR OTHER FIRM RECEIVING IT IS DEEMED, BY RECEIVING IT, TO AGREE THAT IT, AND/OR ANY PART OF IT, SHALL NOT BE DISCLOSED TO ANY PERSON, CORPORATION OR OTHER ENTITY, DUPLICATED, AND/OR USED, EXCEPT AS EXPRESSLY APPROVED IN WRITING IN ADVANCE BY OWNER. THIS DOCUMENT SHALL BE RETURNED TO OWNER UPON REQUEST. IT MAY BE SUBJECT TO CERTAIN RESTRICTIONS UNDER APPLICABLE EXPORT CONTROL LAWS AND REGULATIONS.

Uncontrolled Copy

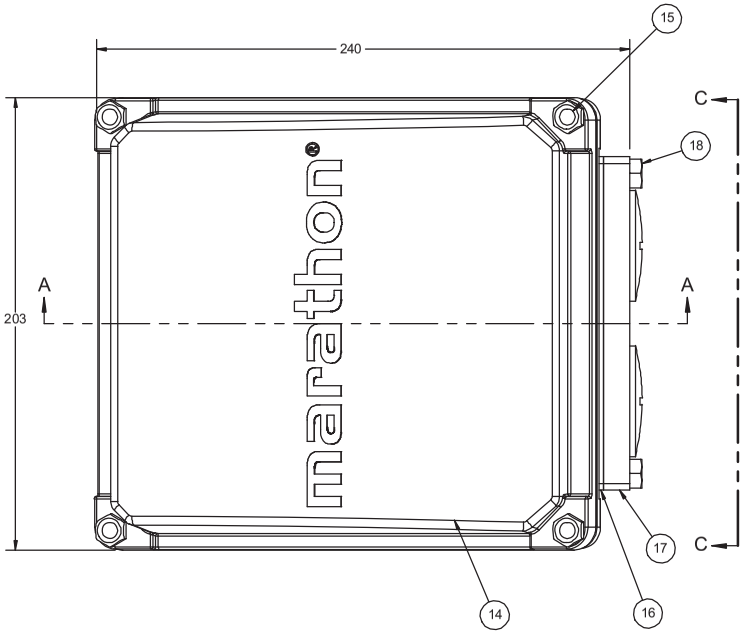

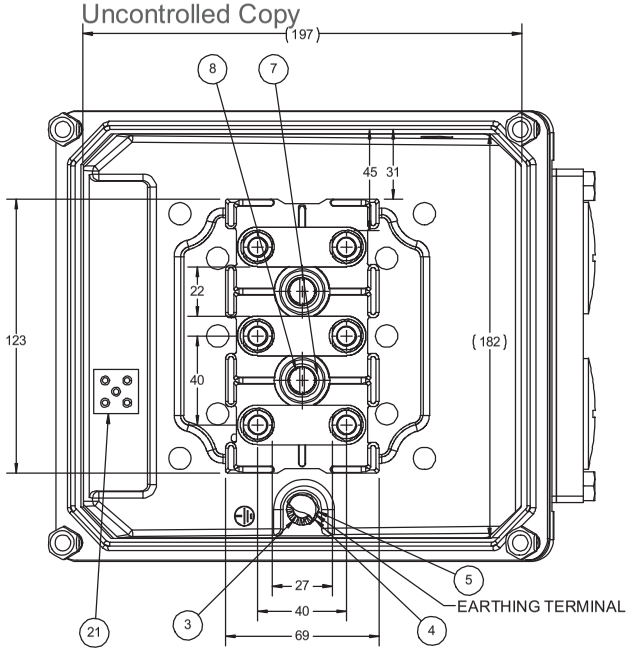

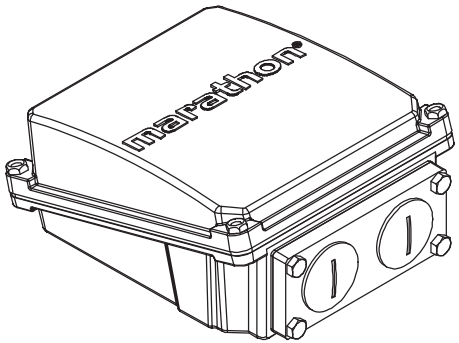

SCALE 2:5

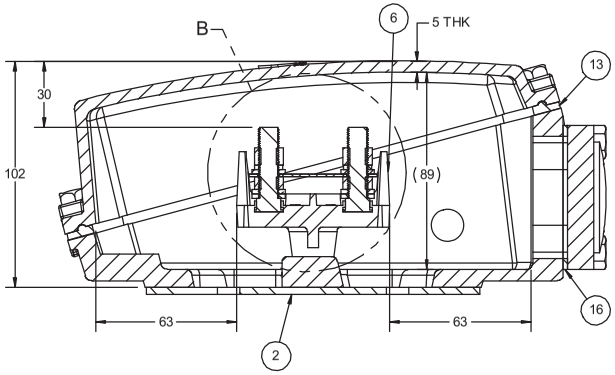

SECTION A-A

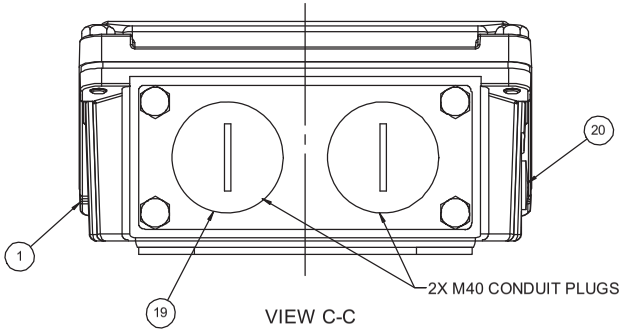

VIEW C-C

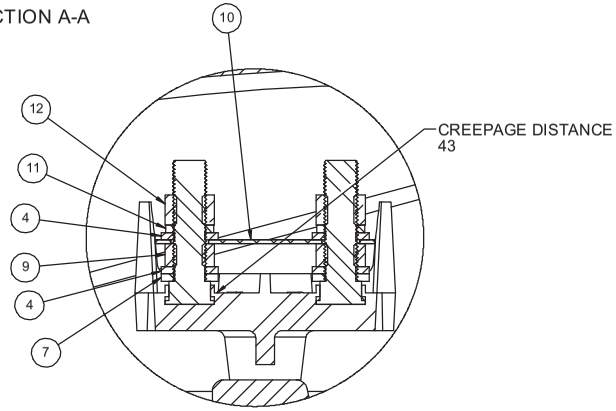

DETAIL B

BALLOON NUMBER	PART FAMILY	DESCRIPTION	QTY.
1	8351225021	TERMINAL BOX BASE-MACH	1
2	8371225008	GASKET	1
3	423338	M8 - TOOTH WASHER	1
4	423118N	M8 - PLAIN WASHER	13
5	4223218N	M8X15 HEX HD BOLT	1
6	5064225003	TERMINAL BLOCK	1
7	423128	M8 - PLAIN WASHER	8
8	422018	M8X25 PAN CHEESE HD SCREW	2
9	421118	M8 - HEX HD NUT	6
10	8572225001	CONNECTING PLATE	5
11	423228	M8 - SPRING WASHER	6
12	421128N	M8 HEX HD NUT COPPER	6
13	8371225023	GASKET	1
14	8353225013	TERMINAL BOX COVER	1
15	8920000002-003	M8 CAPTIVE SCREW	4
16	8371225010	GLAND PLATE GASKET	1
17	8059225009	GLAND PLATE	1
18	4223118	M8X25 HEX HD BOLT	4
19	8217160001	M40 CONDUIT PLUG	2
20	8217080000	M16 CONDUIT PLUG	1
21	3222JF6	AUX. TERMINAL BLOCK	1

DRAWING REVISION	REVISION BY	DATE
A	SKM	25/01/2018
ECO: ECO-0137638	APPROVED BY: JAY	DATE: 25/01/2018

ECO DESCRIPTION: NEW DRAWING RELEASE

COPYRIGHT REGAL BELOIT AMERICA, INC. ALL RIGHTS RESERVED.
PROPRIETARY AND CONFIDENTIAL INFORMATION - THIS DOCUMENT IS THE PROPERTY OF REGAL BELOIT AMERICA, INC. ("OWNER") AND CONTAINS OWNER'S PROPRIETARY INFORMATION. ANY PERSON, CORPORATION OR OTHER FIRM RECEIVING IT IS DEEMED, BY RECEIVING IT, TO AGREE THAT IT, AND/OR ANY PART OF IT, SHALL NOT BE DISCLOSED TO ANY PERSON, CORPORATION OR OTHER ENTITY, DUPLICATED, AND/OR USED, EXCEPT AS EXPRESSLY APPROVED IN WRITING IN ADVANCE BY OWNER. THIS DOCUMENT SHALL BE RETURNED TO OWNER UPON REQUEST. IT MAY BE SUBJECT TO CERTAIN RESTRICTIONS UNDER APPLICABLE EXPORT CONTROL LAWS AND REGULATIONS.

DRAWN BY: SKM
DATE: 25/01/2018
APPROVED BY: JAY
DATE: 25/01/2018
REFERENCE
THIRD ANGLE PROJECTION

Regal Beloit America, Inc.

DESCRIPTION: TERMINAL BOX ASSY
225/200 FR-WITH AUX. T'BLOCK

MATERIAL
PROCESS/FINISH

SIZE: C
DRAWING NUMBER: 5354225011
SHEET: 1 OF1

AIR WASHER & UAF PUMPS MOTORS

18.5 kw 4pole

CG Power and Industrial Solutions Limited
LT Motors Division
Ahmednagar

	MOTOR DATA SHEET	**4 X 270 MW BHADRADRI TPS.,TELANGANA**
CLAUSE		
No.	PROJECT & PACKAGE: E-1 MOTORS	
1	**GENERAL**	
i	Manufacturer & country of origin	CG Power and Industrial Solutions Limited
ii	Equipment driven by motor	PUMP MOTORS FOR VENTILATION AIR WASHERS -
iii	Motor type	3 PHASE AC SQUIRREL CAGE INDUCTION MOTOR IE3
iv	Quantity	As per Project requirement
2	**DESIGN & PERFORMANCE DATA**	
i	Frame size	ND180M
ii	Type of duty	S1 -
iii	Type of enclosure & method of cooling	TEFC Safe Area & IC 411
	Degree of protection	IP55
iv	Applicable standard to which motor	IS/IEC 60034,
	generally confirms	
v	Type of mounting	B3
vi	Direction of rotation viewed from DE	Bidirectional
vii	Standard continuous rating at 40 deg.C	
	ambient temp. as per Indian Std. Kw	20.1
viii	Derated rating for specified normal	
	condition i.e. 50 deg. C ambient (Kw)	18.50
ix	Rated voltage (volts) & Rated frequency(Hz)	415 & 50

x	Permissible variation of	
a	voltage (volts)	+-10%
b	Frequency (Hz)	+3-5%
c	Combined voltage & frequency	10% (Absolute)
xi	Minimum permissible starting voltage(v)	80%
xii	Rated speed at rated voltage & frequency	1470 RPM
xiii	At rated voltage and frequency	
a	Full load current (A)	34.00
b	No load current (approx) (A)	13 (Max)
xiv	Power factor at	
a	100% load & 75% load & 50% load	0.82 & 0.79 & 0.68
b	No load	0.15 (Min.)
c	Starting	0.4 (Min.)
xv	Efficieny (%)at rated voltage & frequency	
a	100% load	92.6
b	75% load	92.6
c	50% load	91.6

18.5 kw 4pole

CG Power and Industrial Solutions Limited
LT Motors Division
Ahmednagar

	MOTOR DATA SHEET	4 X 270 MW BHADRADRI TPS.,TELANGANA
CLAUSE		
No.	PROJECT & PACKAGE: E-1 MOTORS	

CONTRACTOR'S PE-V0-411-554-A211,R-00	TECHNICAL DATA		OF
	REQUIREMENT SHEETS		

xvi	Starting current % FLC at	
a	100% voltage	700
b	85% voltage	595
c	80% voltage	560
xvii	Starting time with minimum permissible	
	voltage	LOAD GD2 ASSUMED=MOTOR GD2.
a	without driven equipment coupled	0.2
b	with driven equipment coupled	0.6
xviii	Safe stall time with 110% of rated voltage	
a	From hot condition in sec.	8
b	From cold condition in sec.	17
xix	Torques - % FLT	
a	Starting torque at min. permissible V	128
	starting torq at rated V.	200
b	Pull up torque at rated voltage	175
c	Pull out torque	225
d	Min. accelerating torque available	10%
e	Rated torque - kg-m	12.26
xx	Stator winding resistance per phase	0.449 (±5%)
	(ohm/milli ohm at 20 ° C.) (Indicative)	
xxi	GD square value of motor - kg-m sq.	0.85
xxii	No. of permissible successive starts	
	when motor is in hot / cold condition	2/3

DOCUMENT No. CONTRACTOR'S PE-V0-411-554-A211,R-00	POST AWARD TECHNICAL DATA	MOTORS	PAGE 3 OF
	REQUIREMENT SHEETS		

xxiii		
a	Locked rotor KVA input	205.3
b	Locked rotor KVA / KW	11.10
		(INCLUSIVE OF TOLERENCE)
xxiv	Bearings	
a	Type	Antifriction deep groove ball
b	Manufacturer	SKF/FAG/NTN/EQUIVALENT
c	Self lubricated or forced lubricated	Self Lubricated
d	Recommended lubricants	Greased for life
e	Guaranteed life in hours	> 40,000 hours
f	Whether dial type thermometer provided	NO
g	Oil pressure guage/switch	N.A.
i	range	
ii	Contact Nos. and ratings	
iii	Accuracy	
xxv	Vibration	As per IS:12075
a	Velocity mm/s	
b	Displacement microns	
xxvi	Noise level db(A) at 1 m at no load	As Per IS:12065

18.5 kw 4pole

CG Power and Industrial Solutions Limited
LT Motors Division
Ahmednagar

	MOTOR DATA SHEET	4 X 270 MW BHADRADRI TPS.,TELANGANA
CLAUSE		
No.	PROJECT & PACKAGE: E-1 MOTORS	

DOCUMENT No. CONTRACTOR'S PE-V0-411-554-A211,R-00	POST AWARD TECHNICAL DATA REQUIREMENT SHEETS	MOTORS	PAGE 4 OF

3	CONSTRUCTIONAL FEATURES	
i	Stator winding insulation	
a	Class & type	F (Temp. rise limited to class 'B')
b	Tropicalised (yes/no)	Yes
c	Temperature rise over specificed max.	
	i. cold water temp. of 38 deg. C	N.A.
	ii. Ambient air 50 deg. C.	70
d	Method of temperature measurement	by resistance
e	Stator winding connection	Delta
f	Number of terminals braught out	6
ii	Type of terminal box for	
a	Stator leads	Cast iron non phase seggregated
b	space heater	Non phase seggregated
c	Temperature detectors	N.A.
d	instrument switch etc.	N.A.
iii.	For main terminal box	
a	Location	RHS From DE
b	Entry of cables	Side
c	Recommended cable size	2 * 3C,25-MM²
	(to be matched with cable size	
	envisaged by owner)	
d	Fault level	50KA FOR 0.25 SEC
iv	Temperature detector for stator winding	No
a	Type	NA
b	Nos. provided	NA
c	Location	NA
d	make	NA
e	resistance value at 0 deg. C (ohms)	NA
v	space heaters	Yes
a	Number	N.A
b	Location	Winding overhang
c	Power requirement (watt)	N.A
vi	Paint shade	RAL5012EPOXY

DOCUMENT No. CONTRACTOR'S PE-V0-411-554-A211,R-00	POST AWARD TECHNICAL DATA REQUIREMENT SHEETS	MOTORS	PAGE 5 OF

vii	Weight of	
a	Motor stator	96
b	Motor rotor	64
c	Total weight (kg)	160
4	CHARACTERISTIC CURVES	
i	Torque speed characteristic of the motor	Yes
ii	Calibration characteristic of platinum	N.A.
	type resistance temperature detector	

18.5 kw 4pole

CG Power and Industrial Solutions Limited
LT Motors Division
Ahmednagar

	MOTOR DATA SHEET	**4 X 270 MW BHADRADRI TPS.,TELANGANA**
CLAUSE		
No.	PROJECT & PACKAGE: E-1 MOTORS	
iii	Calibration characteristic of platinum	N.A
	BTD	
iv	Thermal withstand characteristic	Yes
v	starting current vs. time	Yes
vi	starting current vs. speed	yes
vii	neg. sequence current vs. time	N.A.
viii	PF & efficiency V.s load.	Yes

All performance data is subject to tolerance as per IS/IEC 60034
All performance shall be measured on sinusoidal supply
Temp rise test shall be carried at rated kW & voltage for 1 hour other than S1 duty

ISSUED BY :	Kinshuk Kalia LT MOTORS DIVISION , AHMEDNAGAR		
DOCUMENT No. **CONTRACTOR'S** **PE-V0-411-554-A211,R-00**	POST AWARD TECHNICAL DATA REQUIREMENT SHEETS	**MOTORS**	**PAGE 6 OF**

DIMENSION DRAWING OF 3 PH SQUIRREL CAGE TEFC FOOT MOUNTED TB ON RHS (FROM DE) INDUCTION MOTOR

PROJECTION

DO NOT SCALE | PLEASE ASK, IF IN DOUBT

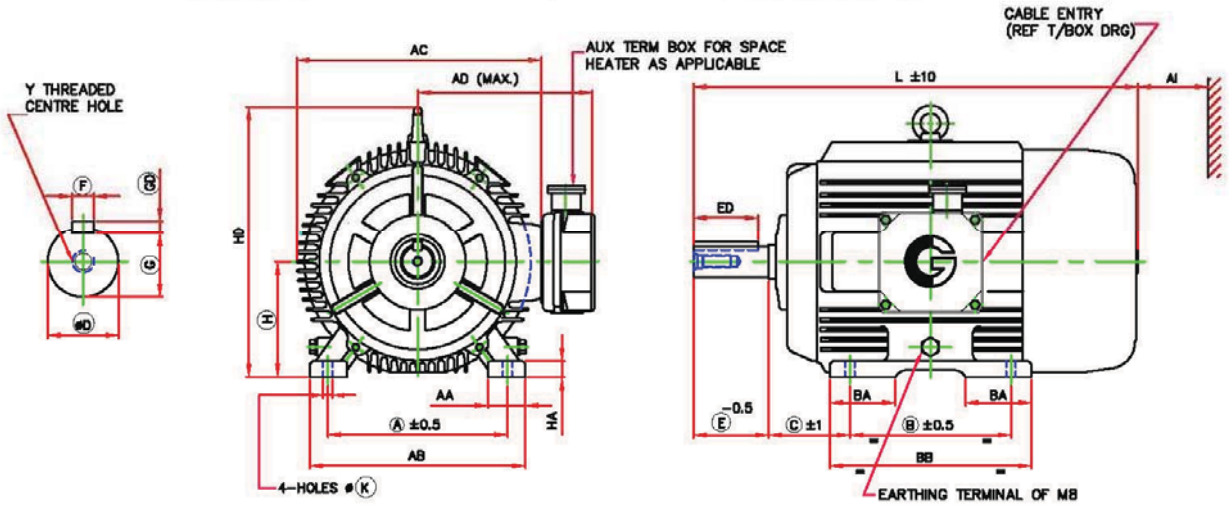

FRAME	FOOT FIXING										OVER ALL					MOTOR wt (kg)	AI**
	A	B	B1	C	H TOL	AA	AB	BA	BB	K TOL	AD	AC	L	HD	HA		
ND180M	279	241		121	180.0 / 179.5	84	348	83	286	15.0 / 15.5	365	352	677	418	22	160	100

D END SHAFT EXTENSION AND KEY						
D TOL	E	ED	F TOL	GD TOL	G	Y
48.018 / 48.002	110	80	14.00 / 13.957	9.0 / 8.9	42.5 / 42.3	M16X32

NOTES

ONE EARTHING TERMINAL IS PROVIDED INSIDE MAIN TERMINAL BOX.
MOTOR MAY HAVE ADDITIONAL FOOT HOLES FOR CUSTOMER/SITE FLEXIBILITY
**MINIMUM DISTANCE FOR EFFICIENT COOLING OF MOTOR TO BE MAINTAINED BY USER

ALL DIMENSIONS ARE IN mm
RINGED DIMENSIONS ARE AS PER IS:1231/IEC60072

CUSTOMER	TSGENCO		RATED O/P kW	18.5	
P.O. NO.			NO OF POLES	4	
IND. NO.			FRAME	ND180M	MOUNTING B3
CLIENT			TAG NO.		
PROJECT					
	NAME	DATE	REMARKS	TITLE	
DRN	SBK	26-May-18		DIMENSIONAL DRAWING	
CHD	SBK	26-May-18			
APPROVED	SSN	26-May-18			

CG Power and Industrial Solutions Limited
LT Motors Division

DRG NO
WAPL52/100-4

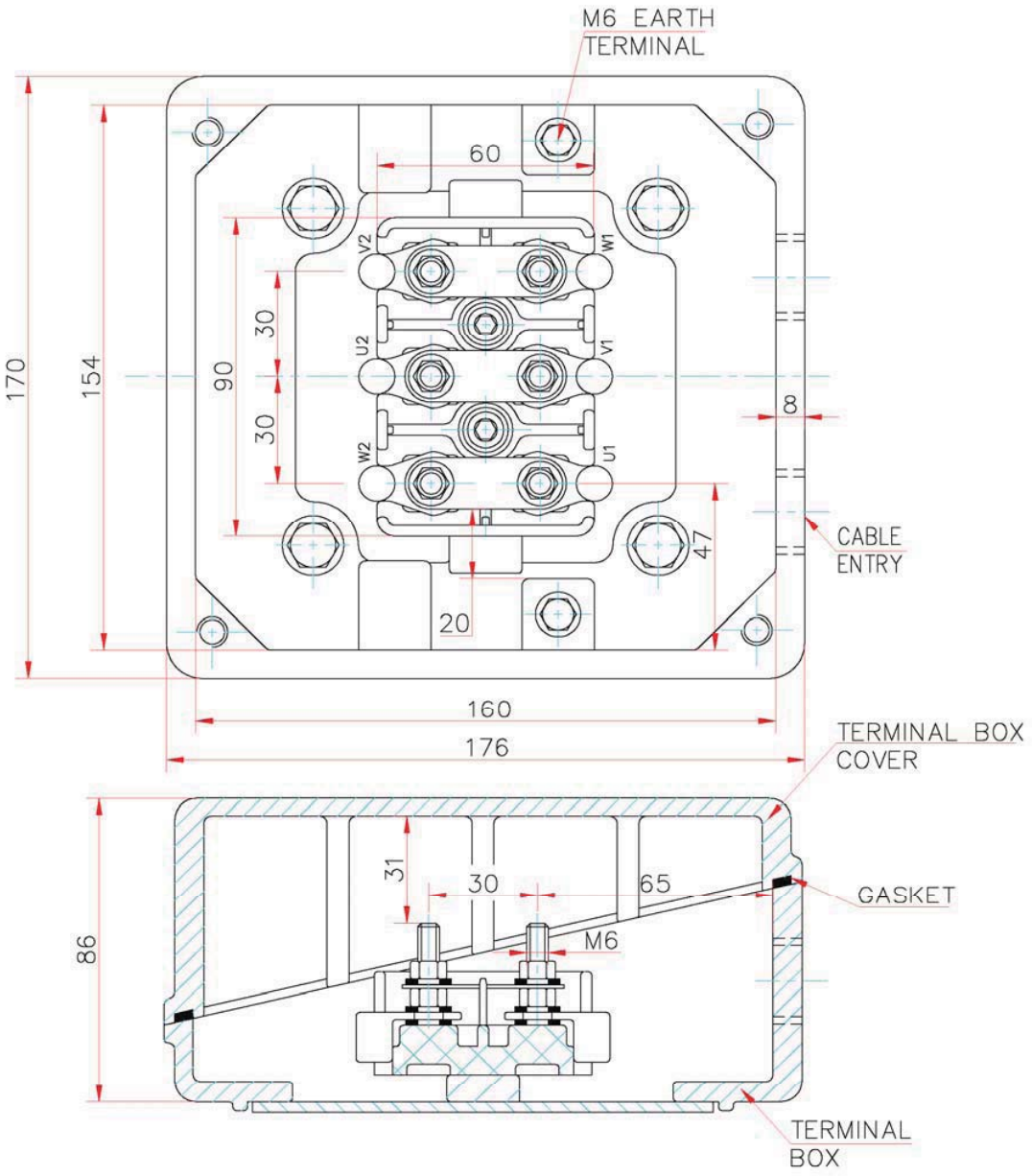

CREEPAGE = 25
CLEARNCE = 12

MATERIAL OF T/BOX
CAST IRON

ACCESSORIES	SPACE HEATER	THERMISTOR	RTD	
APPLICABLE	NA	NA	NA	
CABLE SIZE (ENTRY)	NA	NA	NA	
MAIN CABLE SIZE	2 * 3C,25-MM²	**CABLE ENTRY**	M25X1.5P 2-Nos.	
CUSTOMER	TSGENCO .		RATED O/P kW	18.5
PO No			NO OF POLES	4
INDENT / ENQ No			FRAME	ND180M
CLIENT		Tag No.		
PROJECT				

	NAME	DATE	ALL DIMENSIONS ARE IN MM UNLESS OTHERWISE SPECIFIED
DRAWN BY	AMR	26-05-2018	**TITLE :**
CHECKED BY	SBK	26-05-2018	TERMINAL BOX ARRANGEMENT
APPROVED BY	SRB	26-05-2018	

CG Power and Industrial Solutions Limited
LT Motors Division
Ahmednagar

EA9101R1

DRG No :

61908101

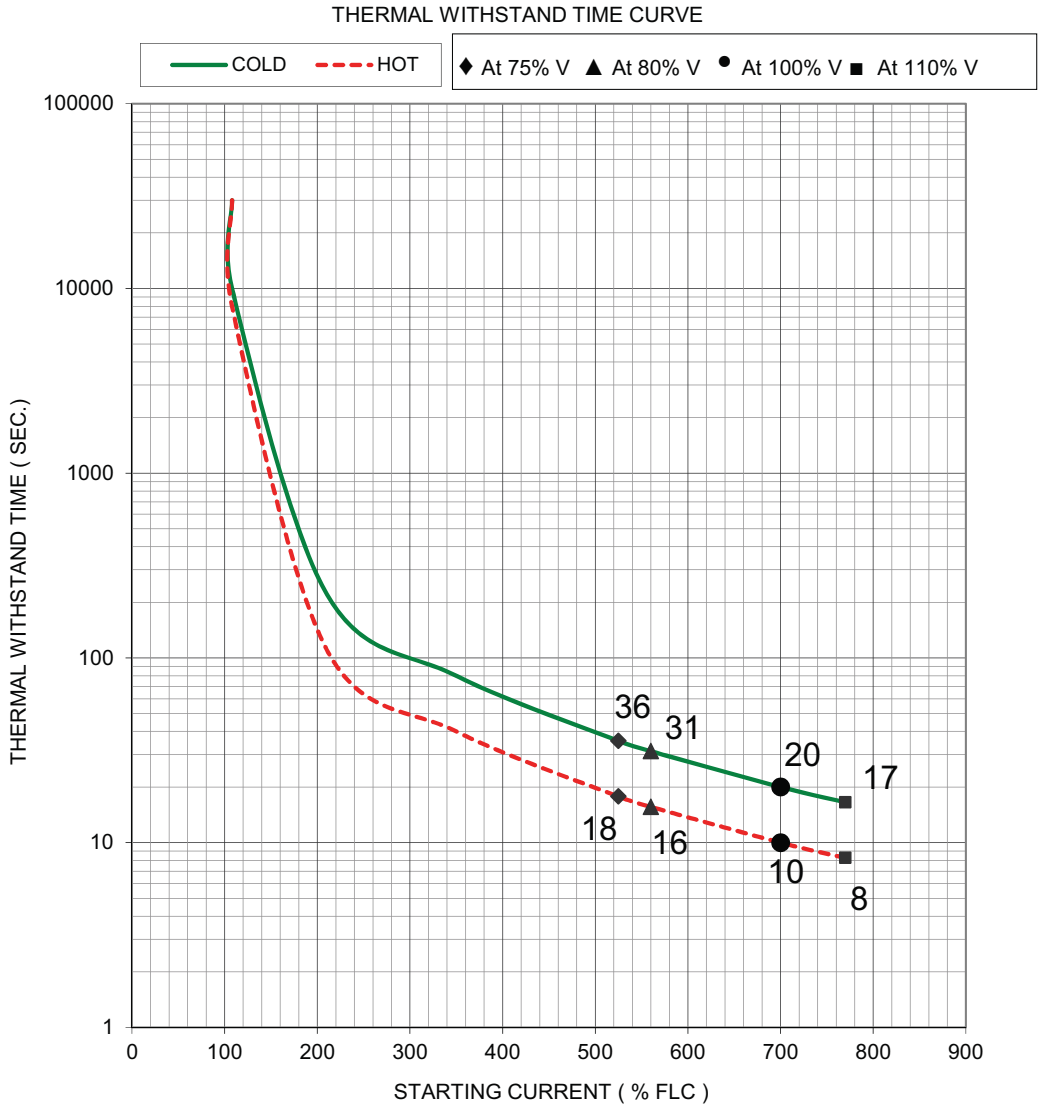

Curves are asymptotic to Y axis.

CUSTOMER	TSGENCO	RATED O/P kW	18.5
P.O.NO		NO OF POLES	4
IND.NO:		FRAME	ND180M
CLIENT:	-	TAG NO.	0
PROJECT:	-		

	NAME	DATE	TITLE
DRN	PLP	26-May-18	THERMAL WITHSTAND TIME CURVE
CHD	PLP	26-May-18	
APPROVED	RGV	26-May-18	SC10/20/700

CG Power and Industrial Solutions Limited
LT Motors Division
Ahmednagar

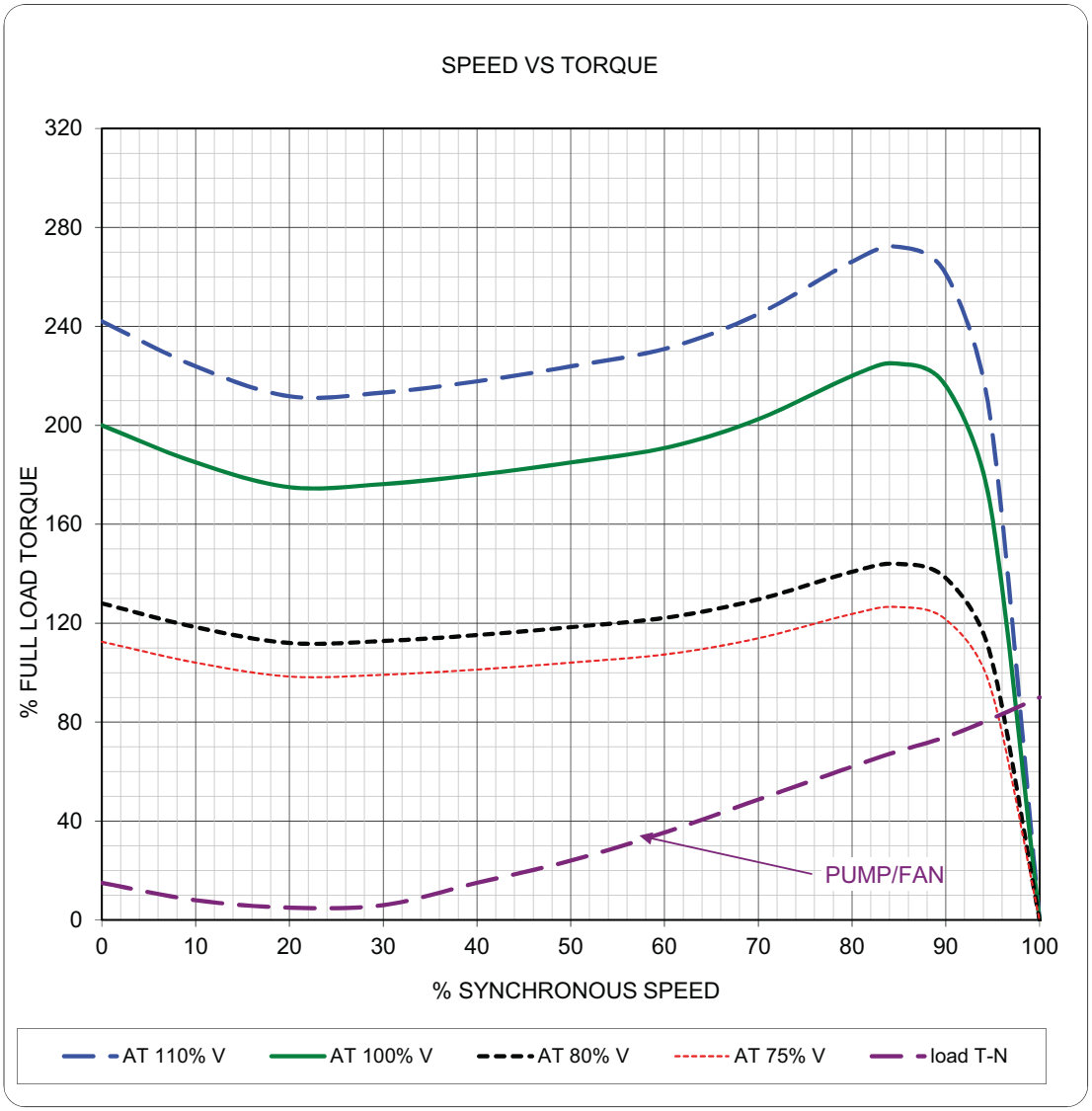

CUSTOMER	TSGENCO			RATED O/P kW	18.5
P.O.NO				NO OF POLES	4
IND.NO:				FRAME	ND180M
CLIENT:	-			TAG NO.	0
PROJECT:	-				
	NAME	DATE	TITLE		
DRN	PLP	26-May-18	SUPERIMPOSED TORQUE SPEED CURVE		
CHD	PLP	26-May-18			
APPROVED	RGV	26-May-18	SC200/700		

CG Power and Industrial Solutions Limited
LT Motors Division
Ahmednagar

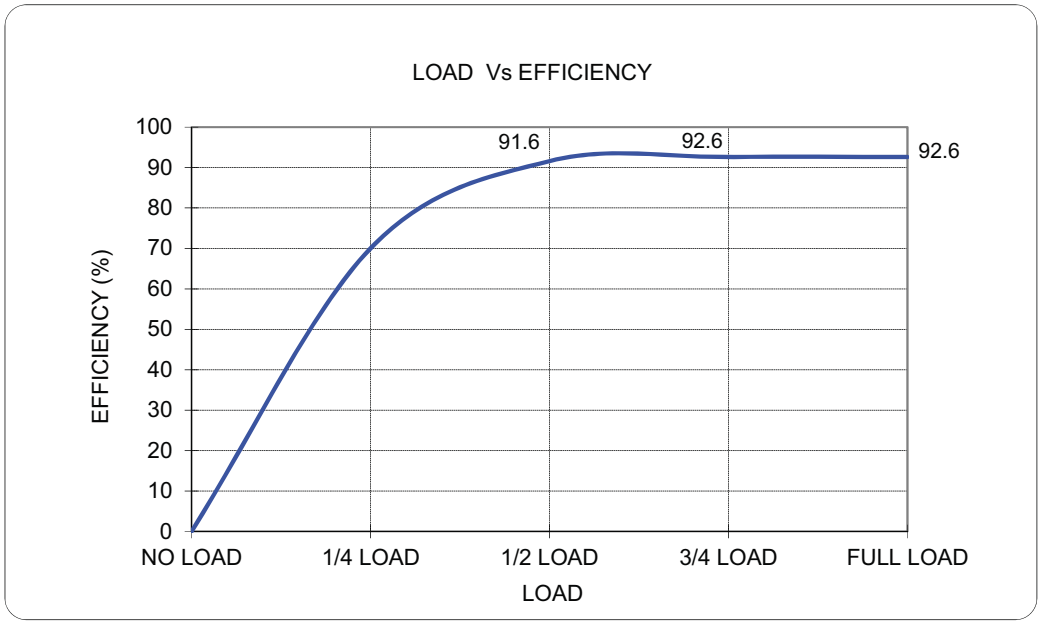

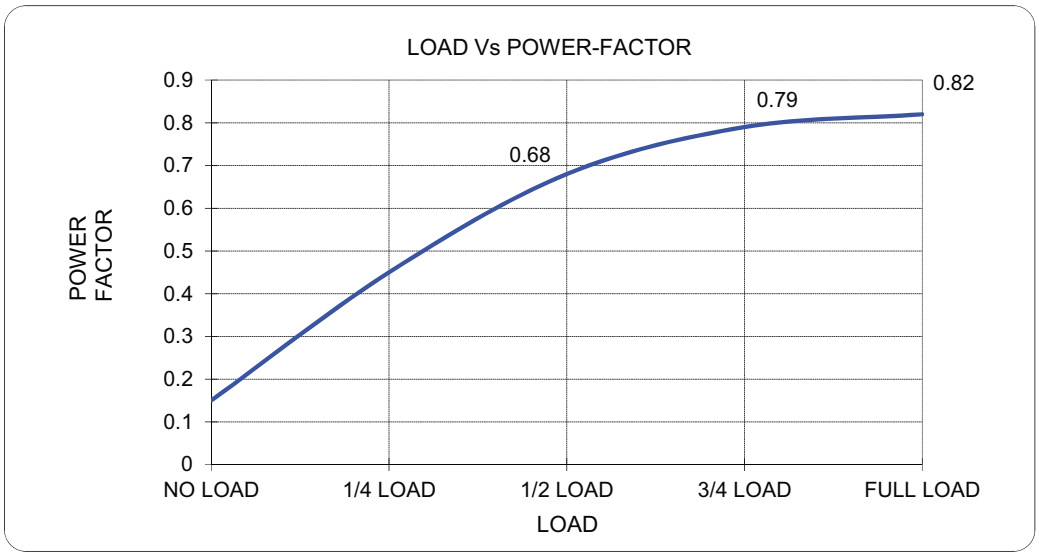

CUSTOMER	TSGENCO			RATED O/P kW	18.5
P.O.NO				NO OF POLES	4
IND.NO:				FRAME	ND180M
CLIENT:	-			TAG NO.	0
PROJECT:	-				
	NAME	DATE	TITLE		
DRN	PLP	26-May-18	LOAD Vs EFFICIENCY & POWER FACTOR CURVE		
CHD	PLP	26-May-18			
APPROVED	RGV	26-May-18	SC92.60/0.82		

CG Power and Industrial Solutions Limited
LT Motors Division
Ahmednagar

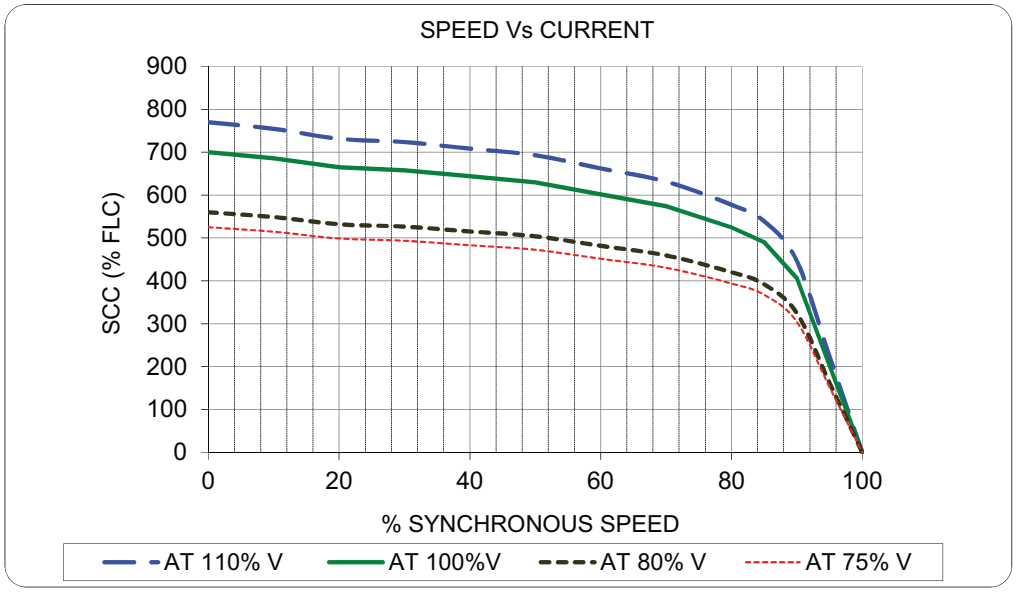

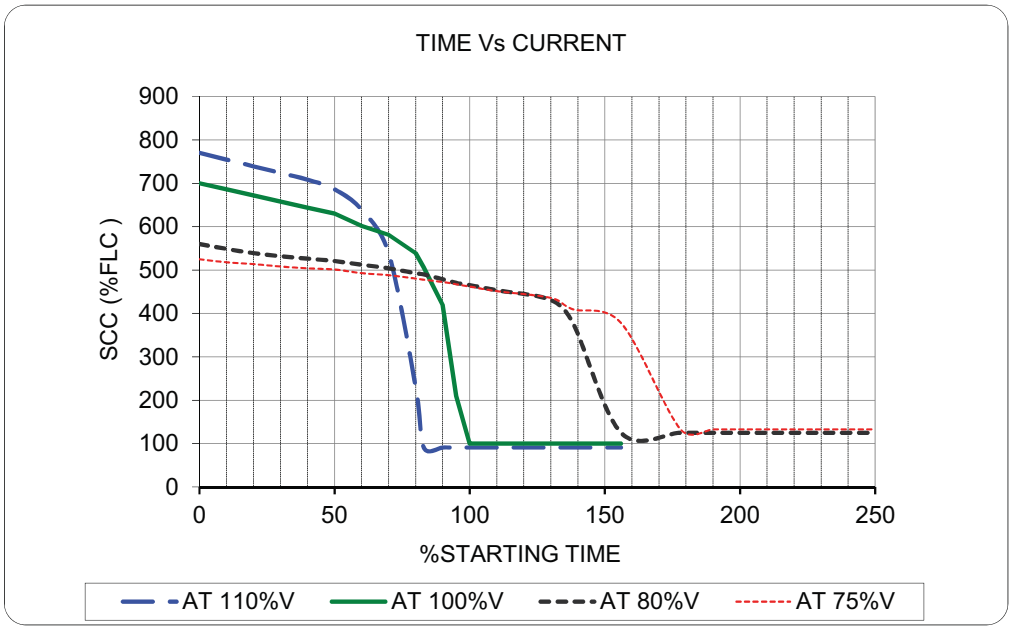

CUSTOMER	TSGENCO	RATED O/P kW	18.5
P.O.NO		NO OF POLES	4
IND.NO:	WAPL52/100	FRAME	ND180M
CLIENT:	-	TAG NO.	0
PROJECT:	-		

	NAME	DATE	TITLE
DRN	PLP	26-May-18	CURRENT SPEED & CURRENT TIME CURVE
CHD	PLP	26-May-18	
APPROVED	RGV	26-May-18	SC1470/100

CG Power and Industrial Solutions Limited
LT Motors Division
Ahmednagar

AXIAL FANS (RE, SUPPLY/EXHAUST) MOTORS

LT MOTOR DATA SHEET		**BHEL BHADRADRI**
CLAUSE		
No.	PROJECT & PACKAGE:	IE-3 MOTORS
1	**GENERAL**	
i	Manufacturer & country of origin	MEML & INDIA
ii	Equipment driven by motor	FAN
iii	Motor type	SCIM
iv	Quantity	As per Project requirement
2	**DESIGN & PERFORMANCE DATA**	
i	Frame size	100L
ii	Type of duty	S1
iii	Type of enclosure & method of cooling / Degree of protection	TEFC / IC 411 / IP 55
iv	Applicable standard to which motor generally confirms	IS 12615, IEC 60034, IEC 60030, IS 12075, IS 12065 Etc.
v	Type of mounting	IMB3
vi	Direction of rotation viewed from DE	Bi-Directional
vii	Standard continuous rating at 40 deg.C ambient temp. as per Indian Std. (KW)	NA
viii	Derated rating for specified normal condition i.e. 50 deg. C ambient (KW)	2.2
ix	Rated voltage (volts) & Rated frequency(Hz)	415 / 50
x	Permissible variation of	
a	voltage (volts)	± 10%
b	Frequency (Hz)	± 5%
c	Combined voltage & frequency	10%
xi	Minimum permissible starting voltage(V)	85% OF RATED VOLTAGE
xii	Rated speed at rated voltage & frequency	1457
xiii	At rated voltage and frequency	
a	Full load current (A)	4.25
b	No load current (A) (Approx.)	2.02
xiv	Power factor at	
a	100% load & 75% load & 50% load	0.83 / 0.77 / 0.64
b	No load (Approx.)	0.098
c	Starting (Approx.)	0.647
xv	Efficieny (%)at rated voltage & frequency	
a	100% load	86.7
b	75% load	86.7
c	50% load	85.2
xvi	Starting current % FLC at	
a	100% voltage	720%
b	85% voltage	612%
c	80% voltage	576%
xvii	Starting time with minimum permissible Voltage	
a	without driven equipment coupled	< 2 Secs.
b	with driven equipment coupled	3.2
xviii	Safe stall time with 110% of rated voltage	
a	From hot condition in sec.	5.5
b	From cold condition in sec.	15
xix	Torques - % FLT	
a	Starting torque at min. permissible V starting torq at rated V.	2.55
b	Pull up torque at rated voltage	2.96
c	Pull out torque	4.41
d	Min. accelerating torque available	2.55
e	Rated torque - kg-m	1.47
xx	Stator winding resistance per Ph. (Ω @ 20°C) (Indicative)	2.86
xxi	GD square value of motor - kg-m²	0.048
xxii	No. of permissible successive starts when motor is in hot / cold condition	2 / 3
xxiii		
a	Locked rotor KVA input (Inclusive of Tolerance)	26.4
b	Locked rotor KVA / KW (Inclusive of Tolerance)	12.0

	LT MOTOR DATA SHEET	**BHEL BHADRADRI**
CLAUSE		
No.	PROJECT & PACKAGE:	IE-3 MOTORS
xxiv	Bearings	
a	Type	DE : BALL / NDE : BALL
b	Manufacturer	SKF, FAG or equivalent
c	Self lubricated or forced lubricated	Self Lubricated
d	Recommended lubricants	GREASE
e	Guaranteed life in hours	40,000
f	Whether dial type thermometer provided	NA
g	Oil pressure guage/switch	NA
i	range	NA
ii	Contact Nos. and ratings	NA
iii	Accuracy	NA
xxv	Vibration	
a	Velocity mm/s	AS PER IS 12075
b	Displacement microns	AS PER IS 12075
xxvi	Noise level db(A) at 1 m at no load	AS PER IS 12065
3	**CONSTRUCTIONAL FEATURES**	
i	Stator winding insulation	
a	Class & type	Class F with temperature rise limited to class B /Varnish
b	Tropicalised (Yes/No)	YES
c	Temperature rise over specificed max.	
	i. cold water temp. of 38 deg. C	NA
	ii. Ambient air 50 deg. C.	70° C
d	Method of temperature measurement	RESISTANCE METHOD
e	Stator winding connection	STAR
f	Number of terminals braught out	6
ii	Type of terminal box for	
a	Stator leads	YES
b	space heater	NA
c	Temperature detectors	NA
d	instrument switch etc.	NA
iii.	For main terminal box	
a	Location	TOP
b	Entry of cables	REFER GAD
c	Recommended cable size (to be matched with cable size envisaged by owner)	3C x 2.5 SQMM CU ARMOURED
d	Fault level	50KA for 0.25Sec with suitable back up fuses
iv	Temperature detector for stator winding	NA
a	Type	NA
b	Nos. provided	NA
c	Location	NA
d	make	NA
e	resistance value at 0 deg. C (ohms)	NA
v	space heaters	NA
a	Number	NA
b	Location	NA
c	Power requirement (Watt)	NA
vi	Paint shade	Shade No. 631 as per IS:5
vii	Approx. Weight of	
a	Motor stator	-
b	Motor rotor	-
c	Total weight (kg)	39
4	**CHARACTERISTIC CURVES**	
i	Torque speed characteristic of the motor	ATTACHED
ii	Calibration characteristic of platinum type resistance temperature detector	NA
iii	Calibration characteristic of platinum BTD	NA
iv	Thermal withstand characteristic	ATTACHED
v	Starting current vs. time	ATTACHED
vi	Starting current vs. speed	ATTACHED
vii	Neg. sequence current vs. time	ATTACHED
viii	PF & Efficiency Vs Load.	ATTACHED
NOTE :		

1) ALL PERFORMANCE FIGURES ARE SUBJECT TO IS/IEC TOLERANCES.
2) Fans to be started at closed damper condition only.

Thermal Withstand Curve 100% Voltage

Date:
Customer:
Attention:
Submitted by:

marathon® Motors TerraMAX

TCA 100LA04

IE3 Efficiency

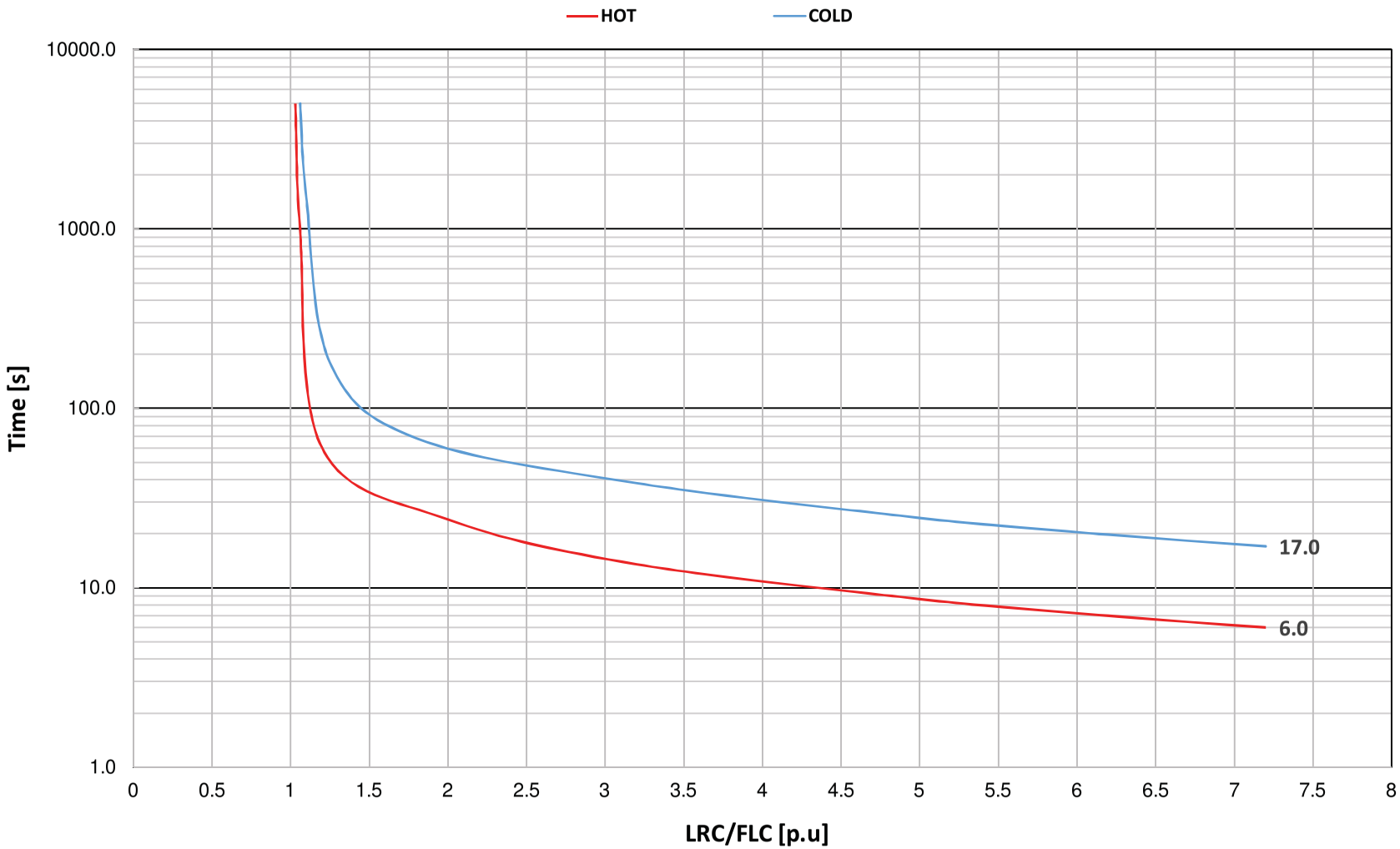

Performance Curves

Date:
Customer:
Attention:
Submitted by:

marathon® Motors TerraMAX™

TCA 100LA04

IE3 Efficiency

Motor Load Data

Load	0%	25%	50%	75%	100%
Current (Amps)	2.02	2.21	2.71	3.4	4.2
Torque (Nm)	0.00	3.6	7.2	10.9	14.7
RPM	1500	1490	1480	1469	1457
Efficiency (%)		78.4	85.2	86.7	86.7
P.F. (%)	9.8	45.0	64.1	76.8	83.4

Motor Speed - Torque Data

	LR	Pull-Up	BD	Rated	Idle
Speed (RPM)	0	300	1186	1457	1500
Current (Amps)	30.5	27.5	17.2	4.2	2.02
Torque (p.u.)	2.38	2.00	2.96	1.00	0.00

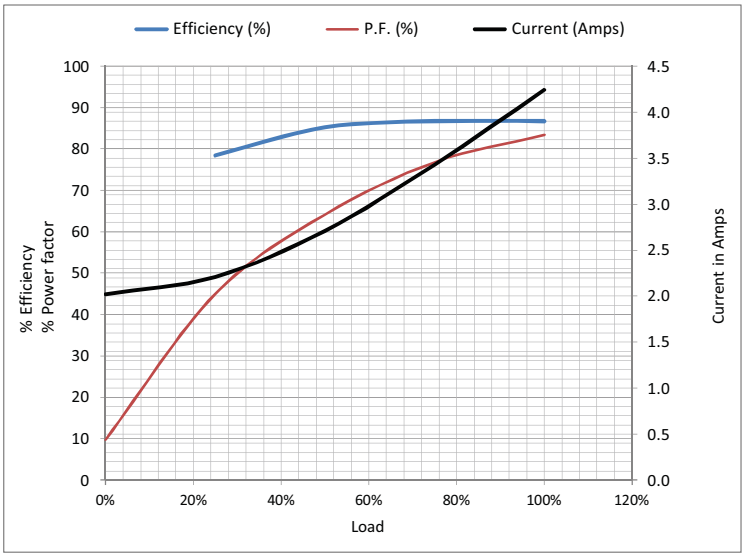

Information Block

kW	2.20	
Sync. RPM	1500	
Frame	100L	
Enclosure	TEFC	
Voltage	415	V
Frequency	50	Hz
Duty	S1	
Ambient	50	° C
Elevation	1,000	meters
Moment of Inertia	0.0115	kg-m²
Motor Weight	38.9	Kgs

Additional Specifications:

TerraMAX IE3 Motor

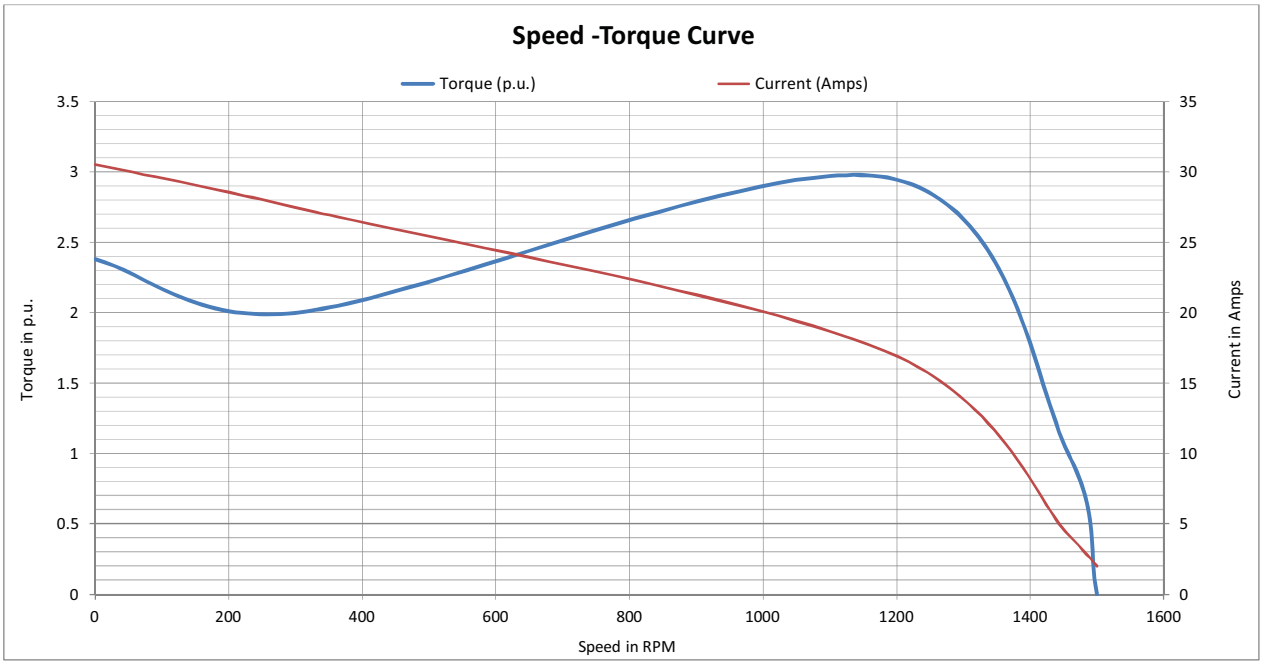

Uncontrolled Copy

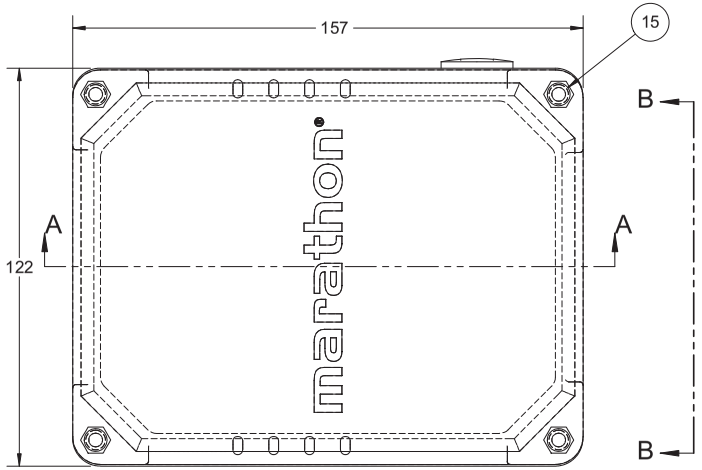

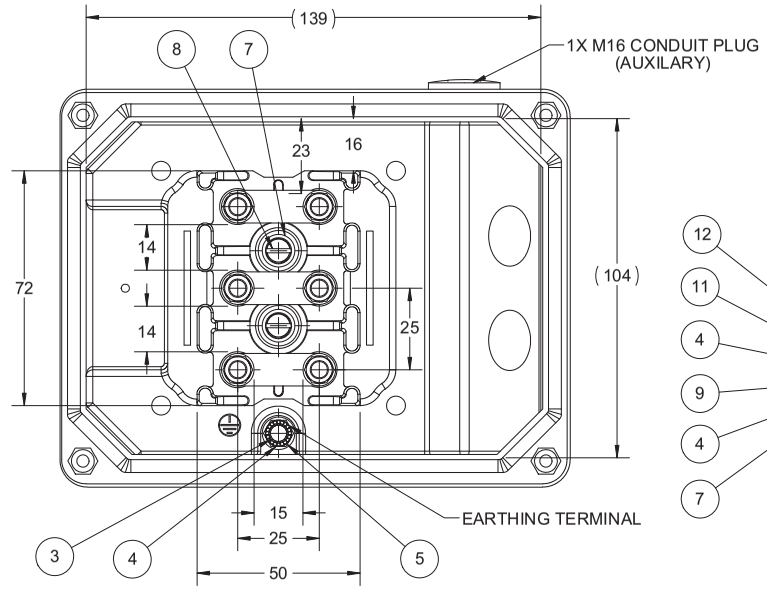

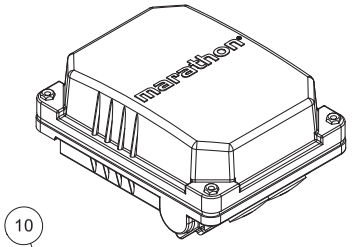

SCALE 1:3

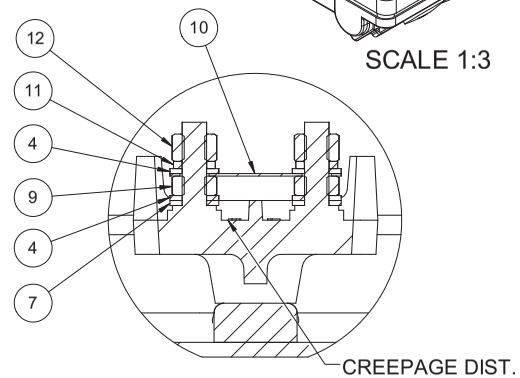

DETAIL C

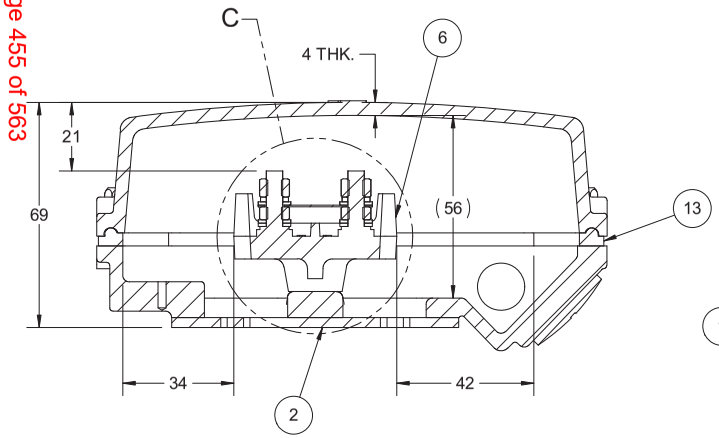

SECTION A-A

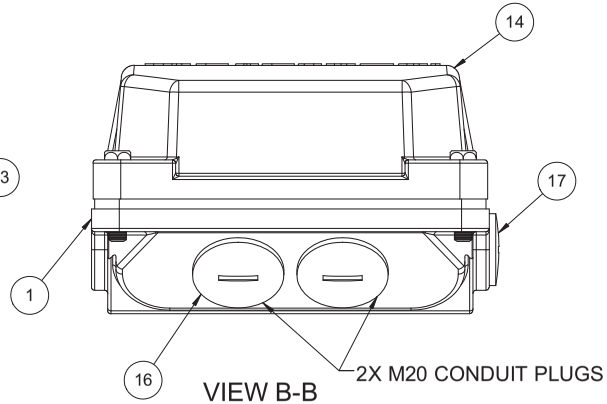

VIEW B-B

BALLOON NUMBER	PART FAMILY	DESCRIPTION	QTY.
1	8351080082	TERMINAL BOX BASE-MACH	1
2	8371080013	GASKET	1
3	423335	M5 - TOOTH WASHER	1
4	423115N	M5 - PLAIN WASHER	13
5	4223215N	M5X10 HEX HD BOLT	1
6	5064080006	TERMINAL BLOCK	1
7	423125	M5 - PLAIN WASHER	8
8	422015	M5X10 PAN CHEESE HD SCREW	2
9	421115	M5 - HEX HD NUT	6
10	8572080002	CONNECTING PLATE	3
11	423225	M5 - SPRING WASHER	6
12	421125N	M5 HEX HD NUT COPPER	6
13	8371080024	GASKET	1
14	8353080028	TERMINAL BOX COVER	1
15	8920000002-001	M5 CAPTIVE SCREW	4
16	8217000003	M20 CONDUIT PLUG	2
17	8217080000	M16 CONDUIT PLUG	1

DRAWING REVISION B	REVISION BY LK	DATE 11/05/2017
ECO ECO-0123509	APPROVED BY JAY	DATE 11/05/2017
ECO DESCRIPTION MODEL UPDATED		

COPYRIGHT REGAL BELOIT AMERICA, INC. ALL RIGHTS RESERVED.
PROPRIETARY AND CONFIDENTIAL INFORMATION - THIS DOCUMENT IS THE PROPERTY OF REGAL BELOIT AMERICA, INC. ("OWNER") AND CONTAINS OWNER'S PROPRIETARY INFORMATION. ANY PERSON, CORPORATION OR OTHER FIRM RECEIVING IT IS DEEMED, BY RECEIVING IT, TO AGREE THAT IT, AND/OR ANY PART OF IT, SHALL NOT BE DISCLOSED TO ANY PERSON, CORPORATION OR OTHER ENTITY, DUPLICATED, AND/OR USED, EXCEPT AS EXPRESSLY APPROVED IN WRITING IN ADVANCE BY OWNER. THIS DOCUMENT SHALL BE RETURNED TO OWNER UPON REQUEST. IT MAY BE SUBJECT TO CERTAIN RESTRICTIONS UNDER APPLICABLE EXPORT CONTROL LAWS AND REGULATIONS.

DRAWN BY	RAF
DATE	15/4/2014
APPROVED BY	SBD
DATE	15/4/2014
REFERENCE	
THIRD ANGLE PROJECTION	

Regal Beloit America, Inc.

DESCRIPTION
TERMINAL BOX ASSY
80-100 FR

MATERIAL | PROCESS/FINISH

SIZE B | DRAWING NUMBER 5354080025 | SHEET 1 OF 1

Uncontrolled Copy

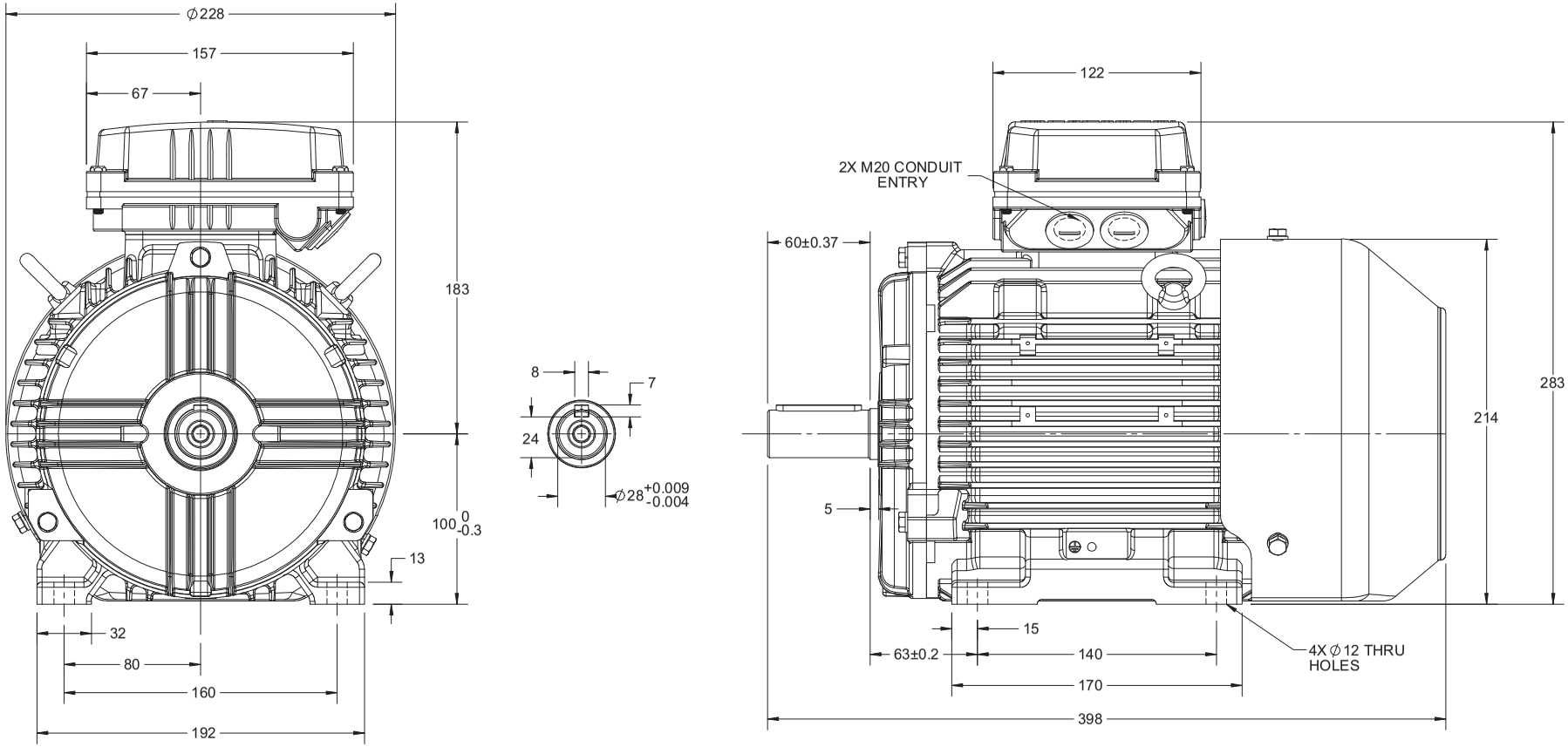

DRAWING REVISION D	REVISION BY S.MUDDA	DATE 22/06/2018		DRAWN BY SMAR	marathon Motors
ECO ECO-0147359	APPROVED BY JAY	DATE 22/06/2018		DATE 01/09/13	
ECO DESCRIPTION OUTLINE UPDATED AS PER NEW 3D STRUCTURE				APPROVED BY JAY	DESCRIPTION OUTLINE 100 FR.- B3 MTG. MOTOR TYPE: TCA/QCA
				DATE 01/09/13	
				REFERENCE	MATERIAL / PROCESS/FINISH
				THIRD ANGLE PROJECTION	SIZE B / DRAWING NUMBER 0210000271 / SHEET 1 OF 1

COPYRIGHT REGAL BELOIT AMERICA, INC. ALL RIGHTS RESERVED.
PROPRIETARY AND CONFIDENTIAL INFORMATION - THIS DOCUMENT IS THE PROPERTY OF REGAL BELOIT AMERICA, INC. ("OWNER") AND CONTAINS OWNER'S PROPRIETARY INFORMATION. ANY PERSON, CORPORATION OR OTHER FIRM RECEIVING IT IS DEEMED, BY RECEIVING IT, TO AGREE THAT IT, AND/OR ANY PART OF IT, SHALL NOT BE DISCLOSED TO ANY PERSON, CORPORATION OR OTHER ENTITY, DUPLICATED, AND/OR USED, EXCEPT AS EXPRESSLY APPROVED IN WRITING IN ADVANCE BY OWNER. THIS DOCUMENT SHALL BE RETURNED TO OWNER UPON REQUEST. IT MAY BE SUBJECT TO CERTAIN RESTRICTIONS UNDER APPLICABLE EXPORT CONTROL LAWS AND REGULATIONS.

LT MOTOR DATA SHEET		**BHEL BHADRADRI**
CLAUSE		
No.	PROJECT & PACKAGE:	IE-3 MOTORS
1	**GENERAL**	
i	Manufacturer & country of origin	MEML & INDIA
ii	Equipment driven by motor	FAN
iii	Motor type	SCIM
iv	Quantity	As per Project requirement
2	**DESIGN & PERFORMANCE DATA**	
i	Frame size	90L
ii	Type of duty	S1
iii	Type of enclosure & method of cooling / Degree of protection	TEFC / IC 411 / IP 55
iv	Applicable standard to which motor generally confirms	IS 12615, IEC 60034, IEC 60030, IS 12075, IS 12065 Etc.
v	Type of mounting	IMB3
vi	Direction of rotation viewed from DE	Bi-Directional
vii	Standard continuous rating at 40 deg.C ambient temp. as per Indian Std. (KW)	NA
viii	Derated rating for specified normal condition i.e. 50 deg. C ambient (KW)	1.5
ix	Rated voltage (volts) & Rated frequency(Hz)	415 / 50
x	Permissible variation of	
a	voltage (volts)	± 10%
b	Frequency (Hz)	± 5%
c	Combined voltage & frequency	10%
xi	Minimum permissible starting voltage(V)	85% OF RATED VOLTAGE
xii	Rated speed at rated voltage & frequency	1442
xiii	At rated voltage and frequency	
a	Full load current (A)	2.95
b	No load current (A) (Approx.)	1.44
xiv	Power factor at	
a	100% load & 75% load & 50% load	0.83 / 0.76 / 0.63
b	No load (Approx.)	0.107
c	Starting (Approx.)	0.685
xv	Efficieny (%)at rated voltage & frequency	
a	100% load	85.3
b	75% load	85.3
c	50% load	83.3
xvi	Starting current % FLC at	
a	100% voltage	650%
b	85% voltage	553%
c	80% voltage	520%
xvii	Starting time with minimum permissible Voltage	
a	without driven equipment coupled	< 2 Secs.
b	with driven equipment coupled	4.5
xviii	Safe stall time with 110% of rated voltage	
a	From hot condition in sec.	7.3
b	From cold condition in sec.	19
xix	Torques - % FLT	
a	Starting torque at min. permissible V starting torq at rated V.	1.90
b	Pull up torque at rated voltage	2.21
c	Pull out torque	3.04
d	Min. accelerating torque available	1.90
e	Rated torque - kg-m	1.01
xx	Stator winding resistance per Ph. (Ω @ 20°C) (Indicative)	4.553
xxi	GD square value of motor - kg-m²	0.024
xxii	No. of permissible successive starts when motor is in hot / cold condition	2 / 3
xxiii		
a	Locked rotor KVA input (Inclusive of Tolerance)	16.5
b	Locked rotor KVA / KW (Inclusive of Tolerance)	11.0

	LT MOTOR DATA SHEET	BHEL BHADRADRI
CLAUSE		
No.	PROJECT & PACKAGE:	IE-3 MOTORS
xxiv	Bearings	
a	Type	DE : BALL / NDE : BALL
b	Manufacturer	SKF, FAG or equivalent
c	Self lubricated or forced lubricated	Self Lubricated
d	Recommended lubricants	GREASE
e	Guaranteed life in hours	40,000
f	Whether dial type thermometer provided	NA
g	Oil pressure guage/switch	NA
i	range	NA
ii	Contact Nos. and ratings	NA
iii	Accuracy	NA
xxv	Vibration	
a	Velocity mm/s	AS PER IS 12075
b	Displacement microns	AS PER IS 12075
xxvi	Noise level db(A) at 1 m at no load	AS PER IS 12065
3	**CONSTRUCTIONAL FEATURES**	
i	Stator winding insulation	
a	Class & type	Class F with temperature rise limited to class B /Varnish
b	Tropicalised (Yes/No)	YES
c	Temperature rise over specificed max.	
	i. cold water temp. of 38 deg. C	NA
	ii. Ambient air 50 deg. C.	70° C
d	Method of temperature measurement	RESISTANCE METHOD
e	Stator winding connection	STAR
f	Number of terminals braught out	6
ii	Type of terminal box for	
a	Stator leads	YES
b	space heater	NA
c	Temperature detectors	NA
d	instrument switch etc.	NA
iii.	For main terminal box	
a	Location	TOP
b	Entry of cables	REFER GAD
c	Recommended cable size (to be matched with cable size envisaged by owner)	3C x 2.5 SQMM CU ARMOURED
d	Fault level	50KA for 0.25Sec with suitable back up fuses
iv	Temperature detector for stator winding	NA
a	Type	NA
b	Nos. provided	NA
c	Location	NA
d	make	NA
e	resistance value at 0 deg. C (ohms)	NA
v	space heaters	NA
a	Number	NA
b	Location	NA
c	Power requirement (Watt)	NA
vi	Paint shade	Shade No. 631 as per IS:5
vii	Approx. Weight of	
a	Motor stator	-
b	Motor rotor	-
c	Total weight (kg)	28
4	**CHARACTERISTIC CURVES**	
i	Torque speed characteristic of the motor	ATTACHED
ii	Calibration characteristic of platinum type resistance temperature detector	NA
iii	Calibration characteristic of platinum BTD	NA
iv	Thermal withstand characteristic	ATTACHED
v	Starting current vs. time	ATTACHED
vi	Starting current vs. speed	ATTACHED
vii	Neg. sequence current vs. time	ATTACHED
viii	PF & Efficiency Vs Load.	ATTACHED
NOTE :		

1) ALL PERFORMANCE FIGURES ARE SUBJECT TO IS/IEC TOLERANCES.
2) Fans to be started at closed damper condition only.

Thermal Withstand Curve 100% Voltage

Date:
Customer:
Attention:
Submitted by:

marathon® Motors TerraMAX

TCA 90LA04

IE3 Efficiency

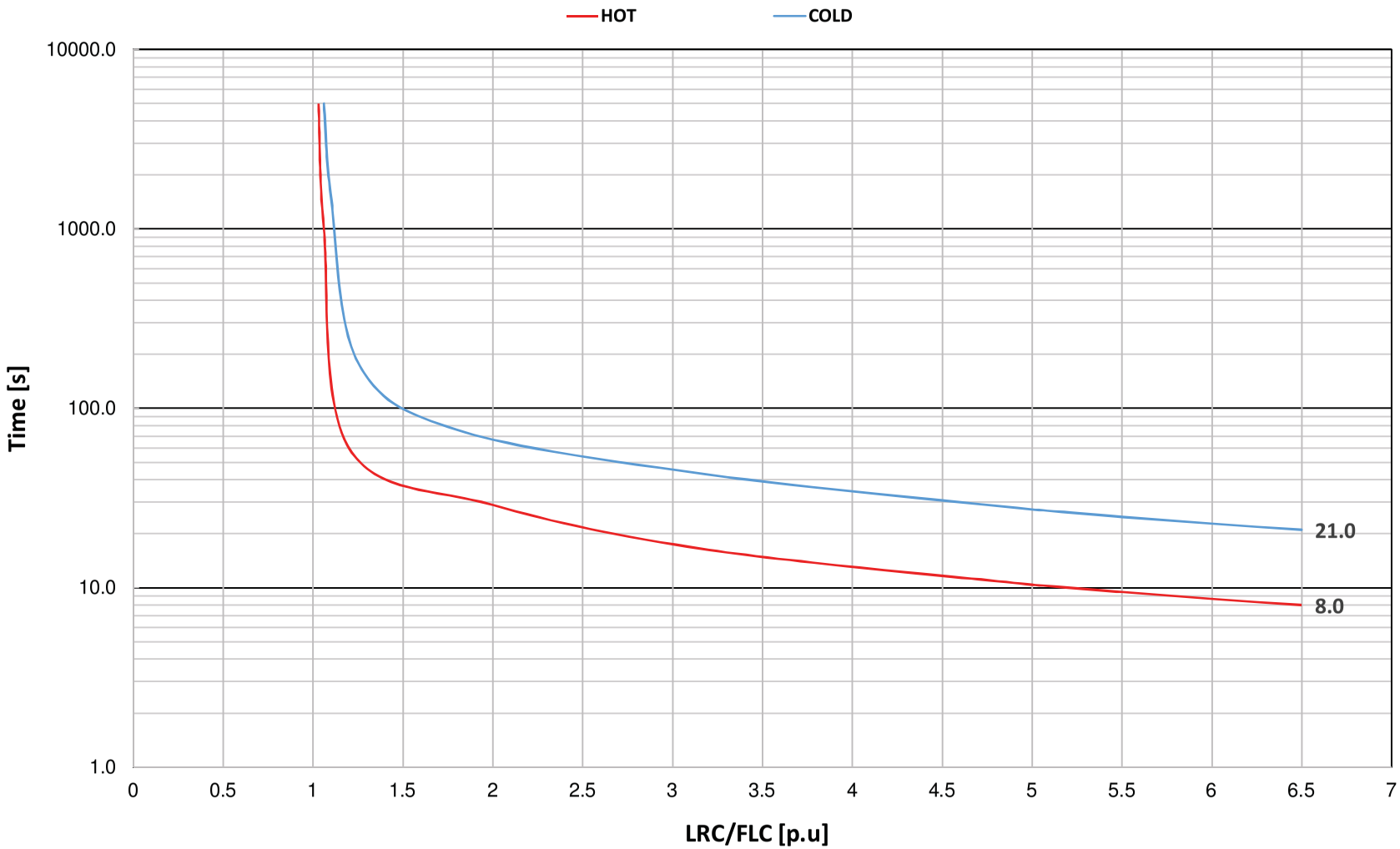

Performance Curves

Date:
Customer:
Attention:
Submitted by:

marathon® Motors TerraMAX™

TCA 90LA04

IE3 Efficiency

Motor Load Data

Load	0%	25%	50%	75%	100%
Current (Amps)	1.44	1.56	1.89	2.36	2.97
Torque (Nm)	0.00	2.41	4.9	7.3	9.9
RPM	1500	1486	1473	1458	1442
Efficiency (%)		75.7	83.3	85.3	85.3
P.F. (%)	10.7	44.0	62.7	75.7	82.5

Motor Speed - Torque Data

	LR	Pull-Up	BD	Rated	Idle
Speed (RPM)	0	300	1075	1442	1500
Current (Amps)	19.6	17.6	11.6	2.97	1.44
Torque (p.u.)	2.61	2.19	2.98	1.00	0.00

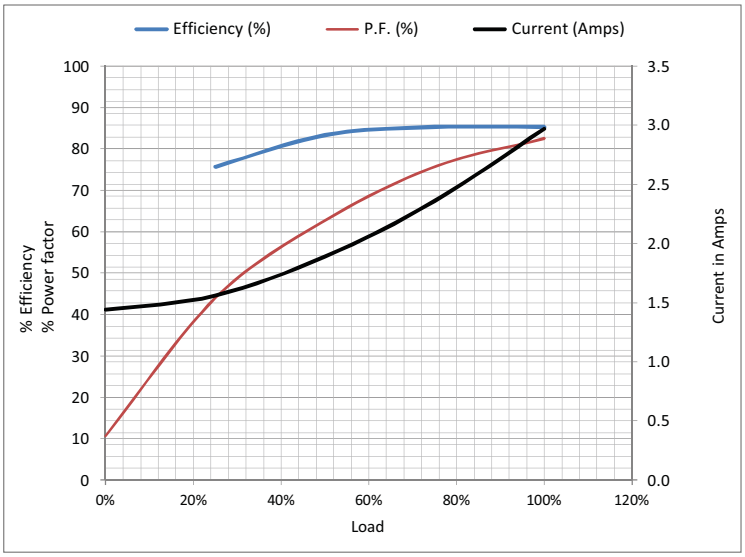

Information Block

kW	1.50	
Sync. RPM	1500	
Frame	90L	
Enclosure	TEFC	
Voltage	415	V
Frequency	50	Hz
Duty	S1	
Ambient	50	° C
Elevation	1,000	meters
Moment of Inertia	0.0057	kg-m²
Motor Weight	27.5	Kgs

Additional Specifications:

TerraMAX IE3 Motor

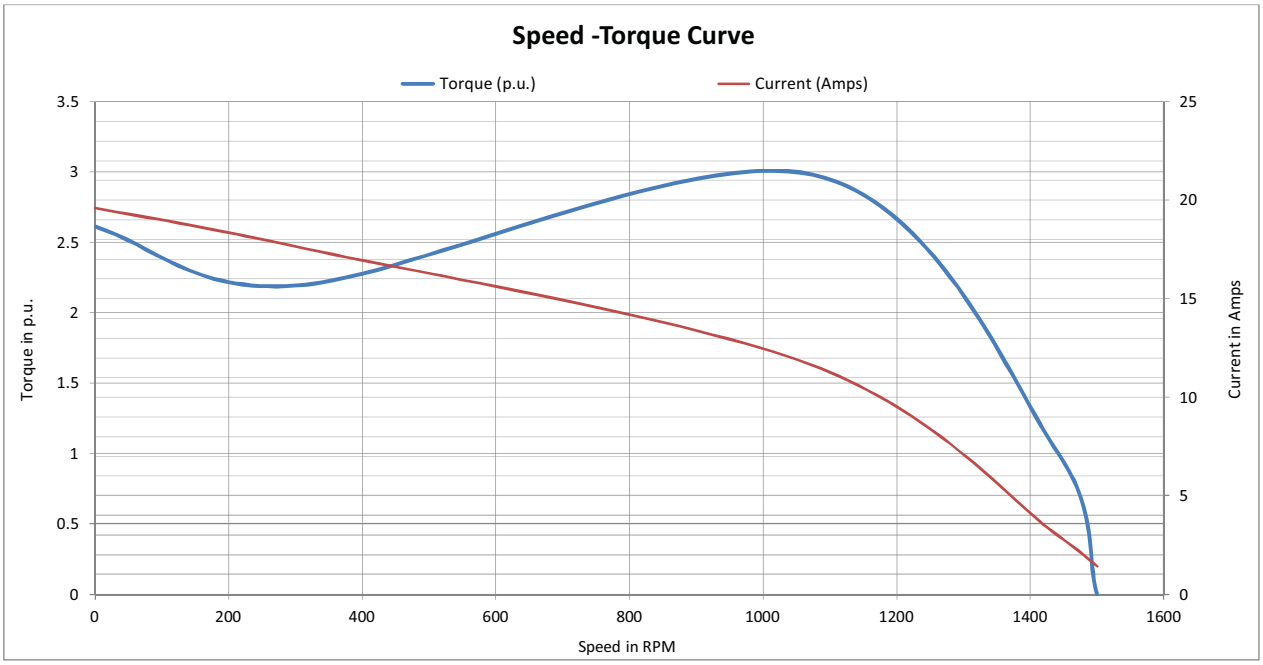

Uncontrolled Copy

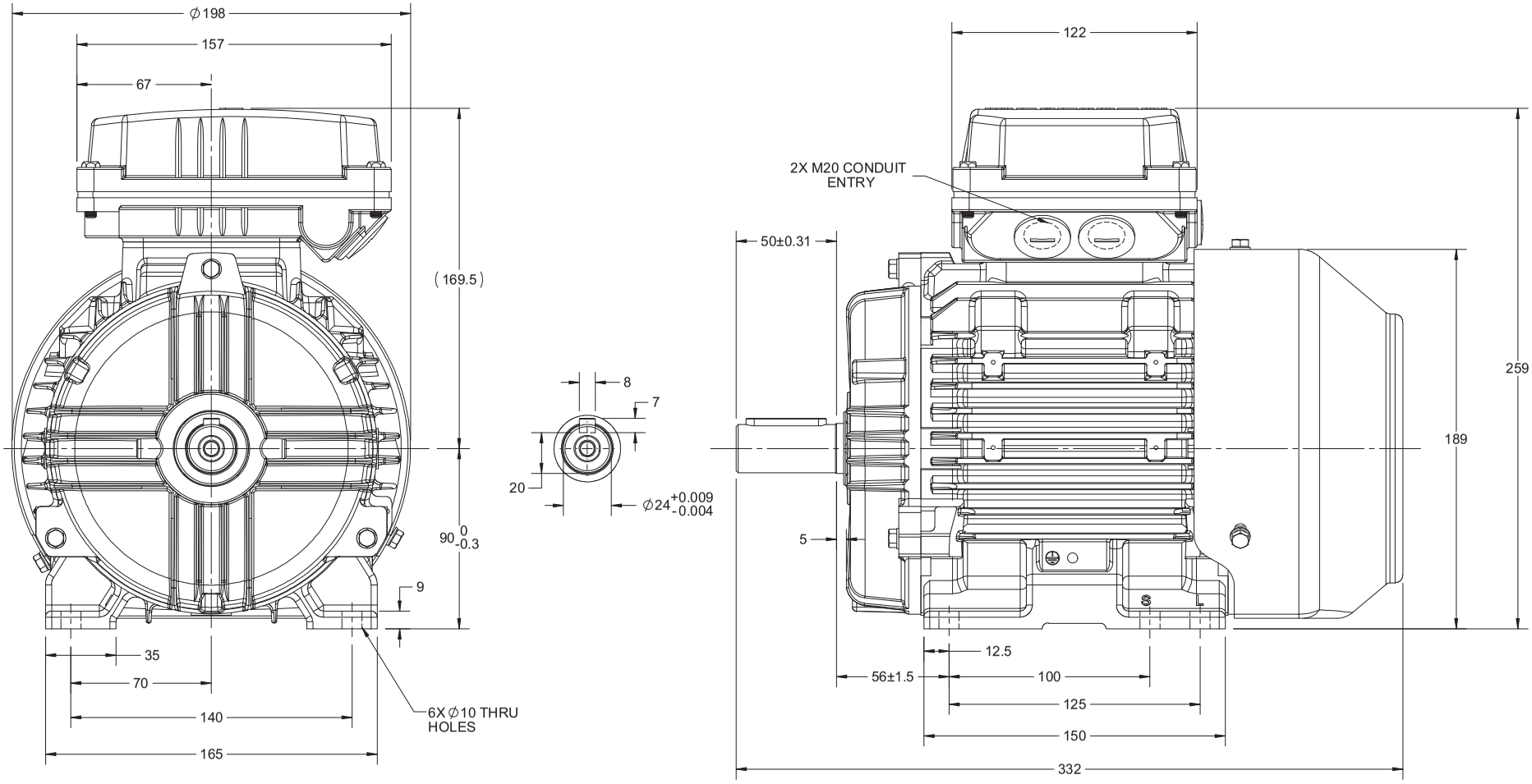

DRAWING REVISION D	REVISION BY A. KEETHA	DATE 26/06/2018		DRAWN BY SMAR	marathon Motors
ECO ECO-0147359	APPROVED BY JAY	DATE 26/06/2018		DATE 1/09/13	
ECO DESCRIPTION OUTLINE UPDATED AS PER NEW 3D STRUCTURING				APPROVED BY JAY	DESCRIPTION OUTLINE 90 FR- B3 MTG. MOTOR TYPE:TCA
				DATE 1/09/13	
				REFERENCE	MATERIAL / PROCESS/FINISH
				THIRD ANGLE PROJECTION	SIZE B / DRAWING NUMBER 0209000395 / SHEET 1 OF 1

COPYRIGHT REGAL BELOIT AMERICA, INC. ALL RIGHTS RESERVED.
PROPRIETARY AND CONFIDENTIAL INFORMATION - THIS DOCUMENT IS THE PROPERTY OF REGAL BELOIT AMERICA, INC. ("OWNER") AND CONTAINS OWNER'S PROPRIETARY INFORMATION. ANY PERSON, CORPORATION OR OTHER FIRM RECEIVING IT IS DEEMED, BY RECEIVING IT, TO AGREE THAT IT, AND/OR ANY PART OF IT, SHALL NOT BE DISCLOSED TO ANY PERSON, CORPORATION OR OTHER ENTITY, DUPLICATED, AND/OR USED, EXCEPT AS EXPRESSLY APPROVED IN WRITING IN ADVANCE BY OWNER. THIS DOCUMENT SHALL BE RETURNED TO OWNER UPON REQUEST. IT MAY BE SUBJECT TO CERTAIN RESTRICTIONS UNDER APPLICABLE EXPORT CONTROL LAWS AND REGULATIONS.

Uncontrolled Copy

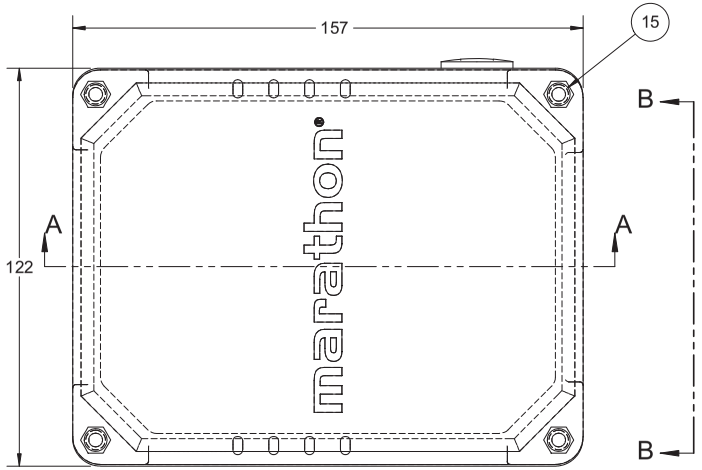

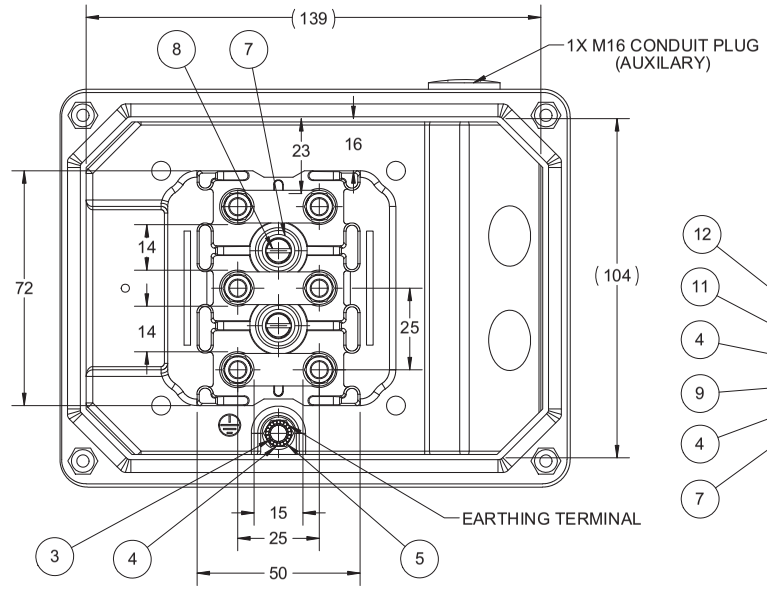

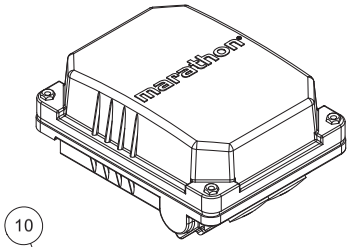

SCALE 1:3

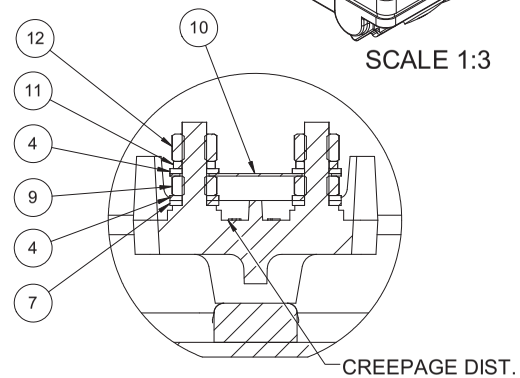

DETAIL C

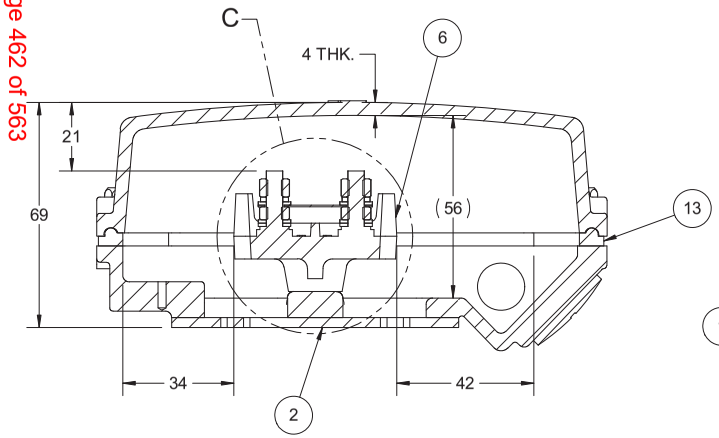

SECTION A-A

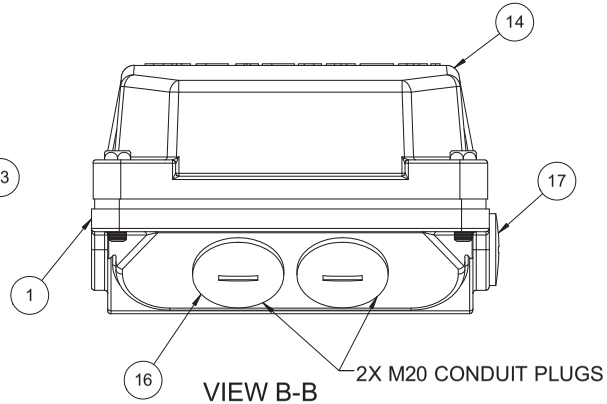

VIEW B-B

BALLOON NUMBER	PART FAMILY	DESCRIPTION	QTY.
1	8351080082	TERMINAL BOX BASE-MACH	1
2	8371080013	GASKET	1
3	423335	M5 - TOOTH WASHER	1
4	423115N	M5 - PLAIN WASHER	13
5	4223215N	M5X10 HEX HD BOLT	1
6	5064080006	TERMINAL BLOCK	1
7	423125	M5 - PLAIN WASHER	8
8	422015	M5X10 PAN CHEESE HD SCREW	2
9	421115	M5 - HEX HD NUT	6
10	8572080002	CONNECTING PLATE	3
11	423225	M5 - SPRING WASHER	6
12	421125N	M5 HEX HD NUT COPPER	6
13	8371080024	GASKET	1
14	8353080028	TERMINAL BOX COVER	1
15	8920000002-001	M5 CAPTIVE SCREW	4
16	8217000003	M20 CONDUIT PLUG	2
17	8217080000	M16 CONDUIT PLUG	1

DRAWING REVISION B	REVISION BY LK	DATE 11/05/2017
ECO ECO-0123509	APPROVED BY JAY	DATE 11/05/2017
ECO DESCRIPTION MODEL UPDATED		

COPYRIGHT REGAL BELOIT AMERICA, INC. ALL RIGHTS RESERVED.
PROPRIETARY AND CONFIDENTIAL INFORMATION - THIS DOCUMENT IS THE PROPERTY OF REGAL BELOIT AMERICA, INC. ("OWNER") AND CONTAINS OWNER'S PROPRIETARY INFORMATION. ANY PERSON, CORPORATION OR OTHER FIRM RECEIVING IT IS DEEMED, BY RECEIVING IT, TO AGREE THAT IT, AND/OR ANY PART OF IT, SHALL NOT BE DISCLOSED TO ANY PERSON, CORPORATION OR OTHER ENTITY, DUPLICATED, AND/OR USED, EXCEPT AS EXPRESSLY APPROVED IN WRITING IN ADVANCE BY OWNER. THIS DOCUMENT SHALL BE RETURNED TO OWNER UPON REQUEST. IT MAY BE SUBJECT TO CERTAIN RESTRICTIONS UNDER APPLICABLE EXPORT CONTROL LAWS AND REGULATIONS.

DRAWN BY	RAF
DATE	15/4/2014
APPROVED BY	SBD
DATE	15/4/2014
REFERENCE	
THIRD ANGLE PROJECTION	

Regal Beloit America, Inc.

DESCRIPTION
TERMINAL BOX ASSY
80-100 FR

MATERIAL | PROCESS/FINISH

SIZE B | DRAWING NUMBER 5354080025 | SHEET 1 OF 1

LT MOTOR DATA SHEET		**BHEL BHADRADRI**
CLAUSE		
No.	PROJECT & PACKAGE:	IE-3 MOTORS
1	**GENERAL**	
i	Manufacturer & country of origin	MEML & INDIA
ii	Equipment driven by motor	FAN
iii	Motor type	SCIM
iv	Quantity	As per Project requirement
2	**DESIGN & PERFORMANCE DATA**	
i	Frame size	90S
ii	Type of duty	S1
iii	Type of enclosure & method of cooling / Degree of protection	TEFC / IC 411 / IP 55
iv	Applicable standard to which motor generally confirms	IS 12615, IEC 60034, IEC 60030, IS 12075, IS 12065 Etc.
v	Type of mounting	IMB3
vi	Direction of rotation viewed from DE	Bi-Directional
vii	Standard continuous rating at 40 deg.C ambient temp. as per Indian Std. (KW)	NA
viii	Derated rating for specified normal condition i.e. 50 deg. C ambient (KW)	1.1
ix	Rated voltage (volts) & Rated frequency(Hz)	415 / 50
x	Permissible variation of	
a	voltage (volts)	± 10%
b	Frequency (Hz)	± 5%
c	Combined voltage & frequency	10%
xi	Minimum permissible starting voltage(V)	85% OF RATED VOLTAGE
xii	Rated speed at rated voltage & frequency	1441
xiii	At rated voltage and frequency	
a	Full load current (A)	2.25
b	No load current (A) (Approx.)	1.20
xiv	Power factor at	
a	100% load & 75% load & 50% load	0.81 / 0.74 / 0.60
b	No load (Approx.)	0.116
c	Starting (Approx.)	0.420
xv	Efficieny (%)at rated voltage & frequency	
a	100% load	84.1
b	75% load	84.1
c	50% load	81.3
xvi	Starting current % FLC at	
a	100% voltage	620%
b	85% voltage	527%
c	80% voltage	496%
xvii	Starting time with minimum permissible Voltage	
a	without driven equipment coupled	< 2 Secs.
b	with driven equipment coupled	6.2
xviii	Safe stall time with 110% of rated voltage	
a	From hot condition in sec.	8.2
b	From cold condition in sec.	23
xix	Torques - % FLT	
a	Starting torque at min. permissible V starting torq at rated V.	1.34
b	Pull up torque at rated voltage	1.56
c	Pull out torque	2.16
d	Min. accelerating torque available	1.34
e	Rated torque - kg-m	0.74
xx	Stator winding resistance per Ph. (Ω @ 20°C) (Indicative)	6.52
xxi	GD square value of motor - kg-m²	0.018
xxii	No. of permissible successive starts when motor is in hot / cold condition	2 / 3
xxiii		
a	Locked rotor KVA input (Inclusive of Tolerance)	12.0
b	Locked rotor KVA / KW (Inclusive of Tolerance)	10.9

LT MOTOR DATA SHEET		**BHEL BHADRADRI**
CLAUSE		
No.	PROJECT & PACKAGE:	IE-3 MOTORS
xxiv	Bearings	
a	Type	DE : BALL / NDE : BALL
b	Manufacturer	SKF, FAG or equivalent
c	Self lubricated or forced lubricated	Self Lubricated
d	Recommended lubricants	GREASE
e	Guaranteed life in hours	40,000
f	Whether dial type thermometer provided	NA
g	Oil pressure guage/switch	NA
i	range	NA
ii	Contact Nos. and ratings	NA
iii	Accuracy	NA
xxv	Vibration	
a	Velocity mm/s	AS PER IS 12075
b	Displacement microns	AS PER IS 12075
xxvi	Noise level db(A) at 1 m at no load	AS PER IS 12065
3	**CONSTRUCTIONAL FEATURES**	
i	Stator winding insulation	
a	Class & type	Class F with temperature rise limited to class B /Varnish
b	Tropicalised (Yes/No)	YES
c	Temperature rise over specificed max.	
	i. cold water temp. of 38 deg. C	NA
	ii. Ambient air 50 deg. C.	70° C
d	Method of temperature measurement	RESISTANCE METHOD
e	Stator winding connection	STAR
f	Number of terminals braught out	6
ii	Type of terminal box for	
a	Stator leads	YES
b	space heater	NA
c	Temperature detectors	NA
d	instrument switch etc.	NA
iii.	For main terminal box	
a	Location	TOP
b	Entry of cables	REFER GAD
c	Recommended cable size (to be matched with cable size envisaged by owner)	3C x 2.5 SQMM CUARMOURED
d	Fault level	50KA for 0.25Sec with suitable back up fuses
iv	Temperature detector for stator winding	NA
a	Type	NA
b	Nos. provided	NA
c	Location	NA
d	make	NA
e	resistance value at 0 deg. C (ohms)	NA
v	space heaters	NA
a	Number	NA
b	Location	NA
c	Power requirement (Watt)	NA
vi	Paint shade	Shade No. 631 as per IS:5
vii	Approx. Weight of	
a	Motor stator	-
b	Motor rotor	-
c	Total weight (kg)	25
4	**CHARACTERISTIC CURVES**	
i	Torque speed characteristic of the motor	ATTACHED
ii	Calibration characteristic of platinum type resistance temperature detector	NA
iii	Calibration characteristic of platinum BTD	NA
iv	Thermal withstand characteristic	ATTACHED
v	Starting current vs. time	ATTACHED
vi	Starting current vs. speed	ATTACHED
vii	Neg. sequence current vs. time	ATTACHED
viii	PF & Efficiency Vs Load.	ATTACHED
NOTE :		

1) ALL PERFORMANCE FIGURES ARE SUBJECT TO IS/IEC TOLERANCES.
2) Fans to be started at closed damper condition only.

Thermal Withstand Curve 100% Voltage

Date:
Customer:
Attention:
Submitted by:

marathon® Motors TerraMAX

TCA 90SA04

IE3 Efficiency

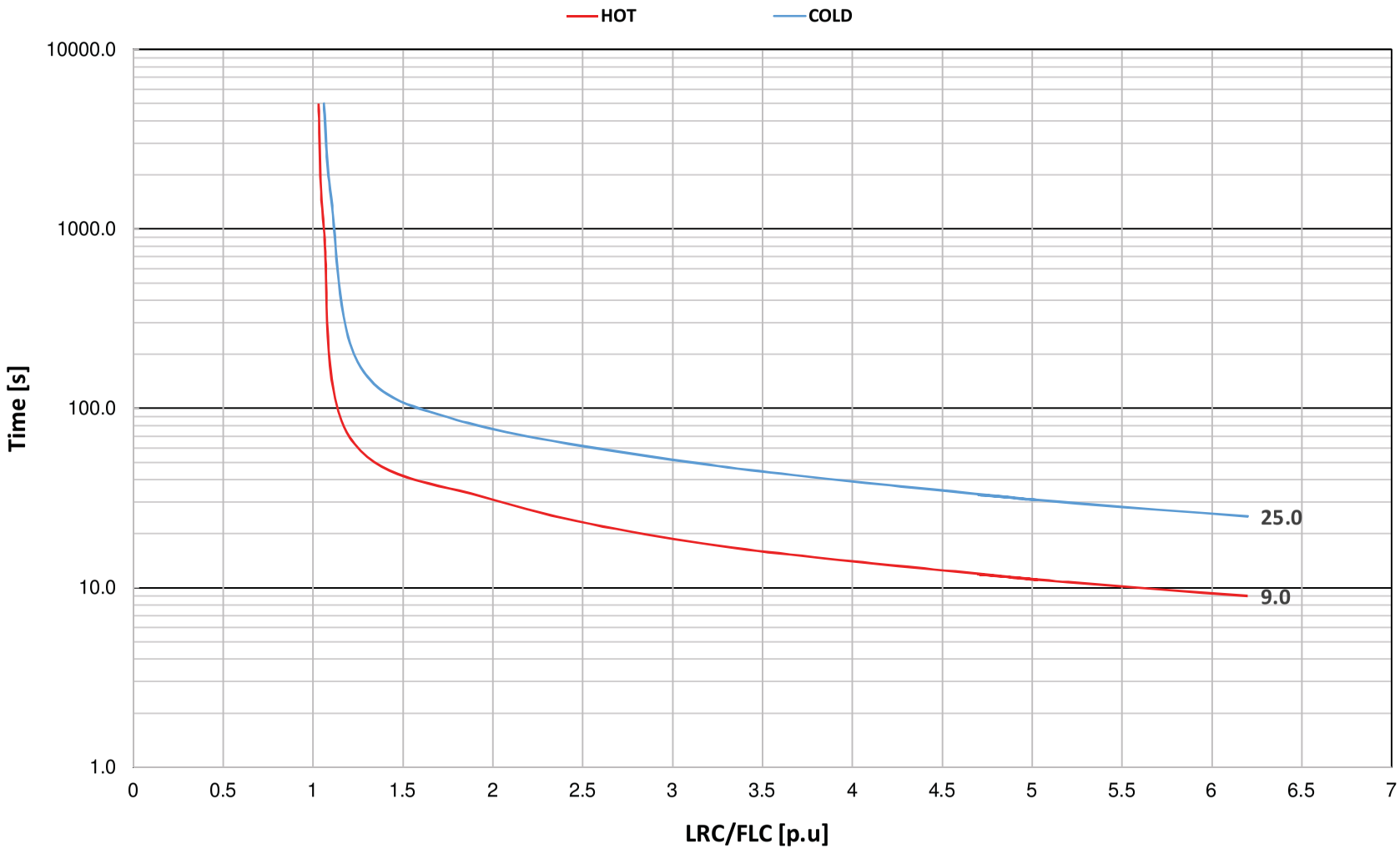

Performance Curves

Date:
Customer:
Attention:
Submitted by:

marathon® Motors TerraMAX™

TCA 90SA04

IE3 Efficiency

Motor Load Data

Load	0%	25%	50%	75%	100%
Current (Amps)	1.20	1.28	1.50	1.84	2.24
Torque (Nm)	0.00	1.81	3.6	5.5	7.4
RPM	1500	1486	1473	1458	1441
Efficiency (%)		72.5	81.3	84.1	84.1
P.F. (%)	11.6	42.0	60.2	73.9	81.4

Motor Speed - Torque Data

	LR	Pull-Up	BD	Rated	Idle
Speed (RPM)	0	300	1096	1441	1500
Current (Amps)	13.9	12.5	8.5	2.24	1.20
Torque (p.u.)	2.46	2.07	2.93	1.00	0.00

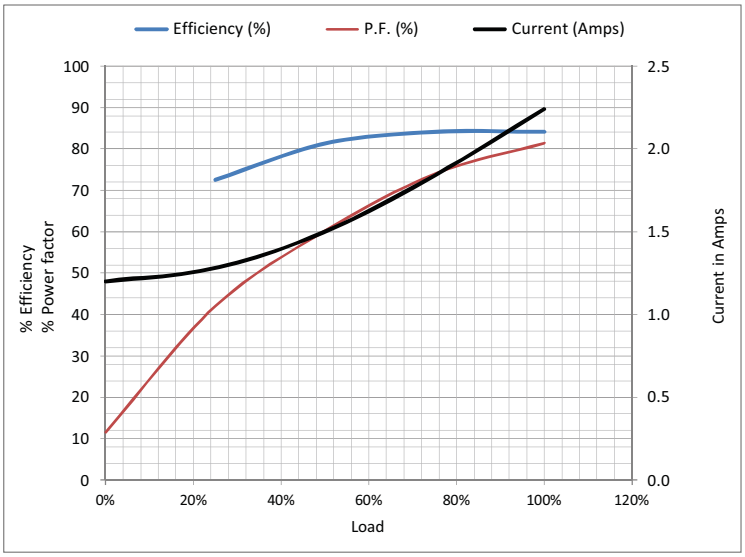

Information Block

kW	1.10	
Sync. RPM	1500	
Frame	90S	
Enclosure	TEFC	
Voltage	415	V
Frequency	50	Hz
Duty	S1	
Ambient	50	° C
Elevation	1,000	meters
Moment of Inertia	0.0045	kg-m²
Motor Weight	24.5	Kgs

Additional Specifications:

TerraMAX IE3 Motor

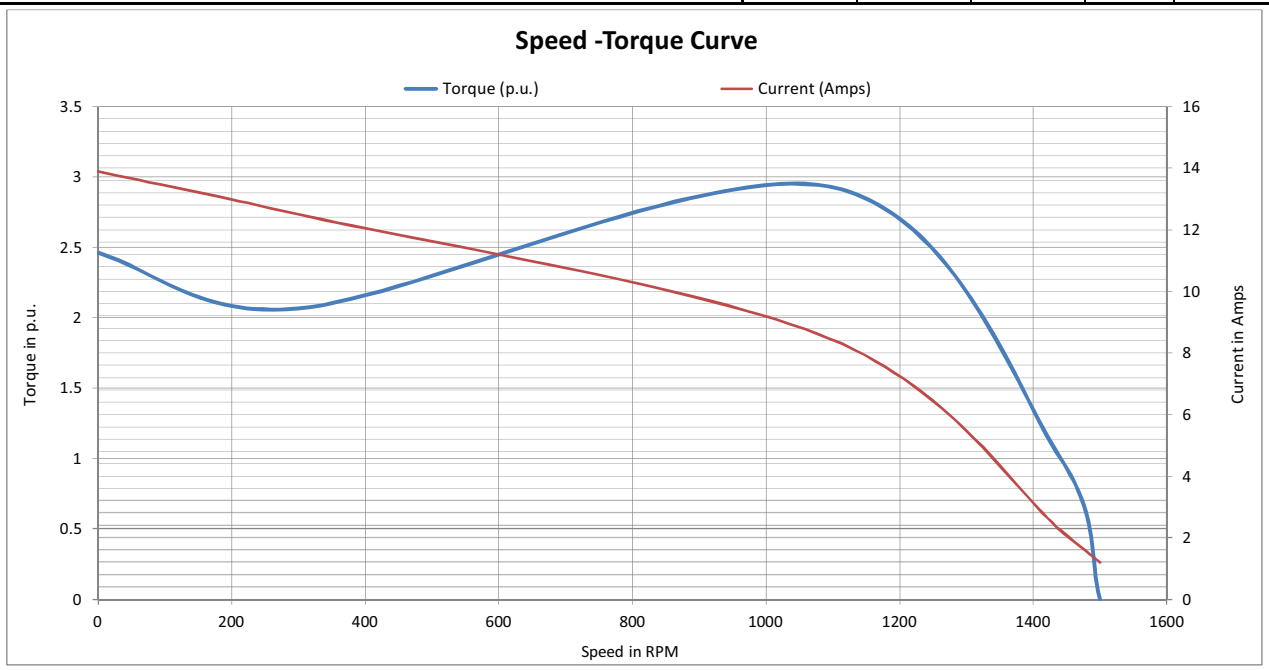

Uncontrolled Copy

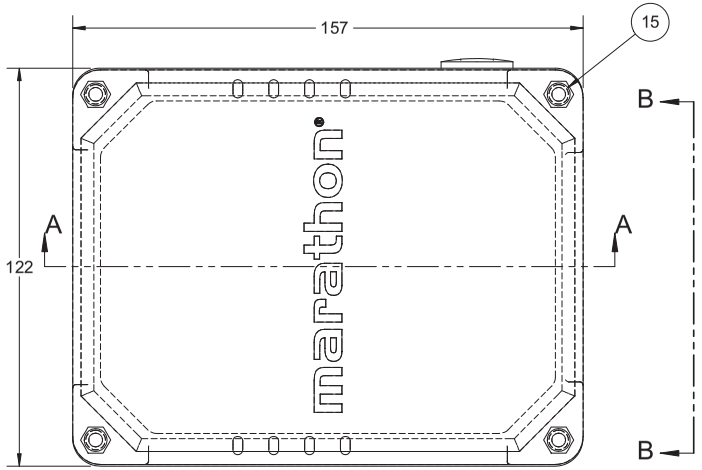

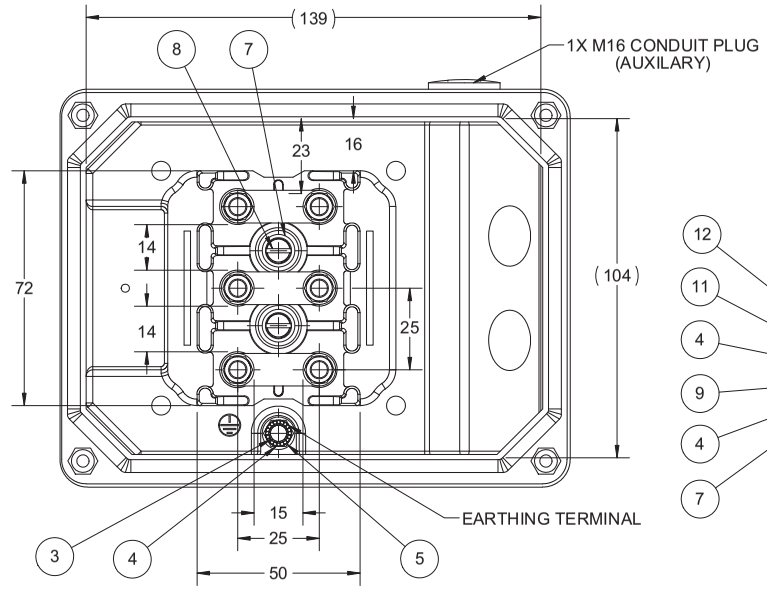

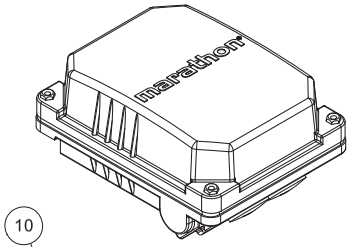

SCALE 1:3

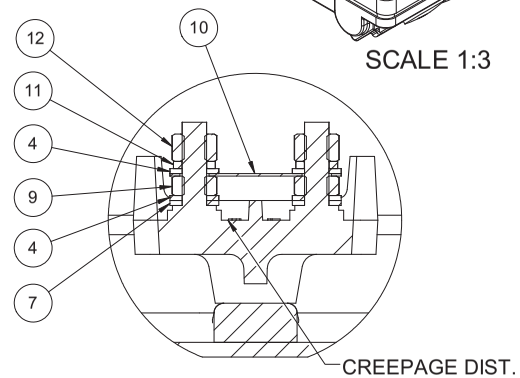

DETAIL C

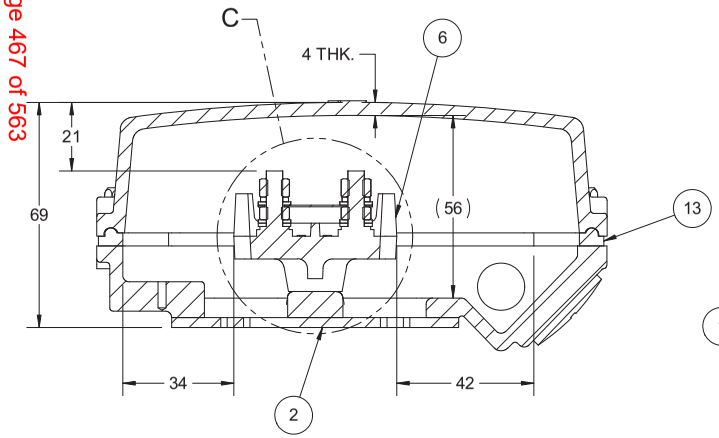

SECTION A-A

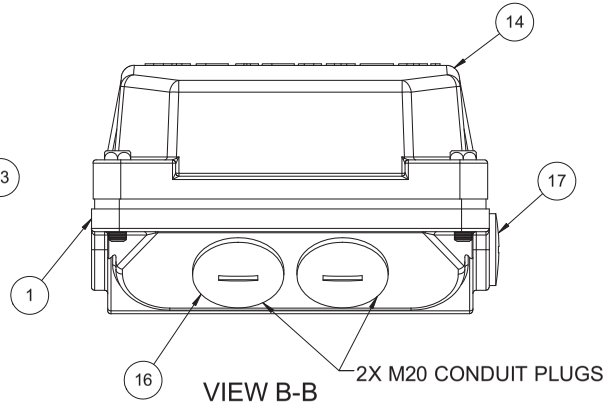

VIEW B-B

BALLOON NUMBER	PART FAMILY	DESCRIPTION	QTY.
1	8351080082	TERMINAL BOX BASE-MACH	1
2	8371080013	GASKET	1
3	423335	M5 - TOOTH WASHER	1
4	423115N	M5 - PLAIN WASHER	13
5	4223215N	M5X10 HEX HD BOLT	1
6	5064080006	TERMINAL BLOCK	1
7	423125	M5 - PLAIN WASHER	8
8	422015	M5X10 PAN CHEESE HD SCREW	2
9	421115	M5 - HEX HD NUT	6
10	8572080002	CONNECTING PLATE	3
11	423225	M5 - SPRING WASHER	6
12	421125N	M5 HEX HD NUT COPPER	6
13	8371080024	GASKET	1
14	8353080028	TERMINAL BOX COVER	1
15	8920000002-001	M5 CAPTIVE SCREW	4
16	8217000003	M20 CONDUIT PLUG	2
17	8217080000	M16 CONDUIT PLUG	1

DRAWING REVISION B	REVISION BY LK	DATE 11/05/2017
ECO ECO-0123509	APPROVED BY JAY	DATE 11/05/2017
ECO DESCRIPTION MODEL UPDATED		

COPYRIGHT REGAL BELOIT AMERICA, INC. ALL RIGHTS RESERVED.
PROPRIETARY AND CONFIDENTIAL INFORMATION - THIS DOCUMENT IS THE PROPERTY OF REGAL BELOIT AMERICA, INC. ("OWNER") AND CONTAINS OWNER'S PROPRIETARY INFORMATION. ANY PERSON, CORPORATION OR OTHER FIRM RECEIVING IT IS DEEMED, BY RECEIVING IT, TO AGREE THAT IT, AND/OR ANY PART OF IT, SHALL NOT BE DISCLOSED TO ANY PERSON, CORPORATION OR OTHER ENTITY, DUPLICATED, AND/OR USED, EXCEPT AS EXPRESSLY APPROVED IN WRITING IN ADVANCE BY OWNER. THIS DOCUMENT SHALL BE RETURNED TO OWNER UPON REQUEST. IT MAY BE SUBJECT TO CERTAIN RESTRICTIONS UNDER APPLICABLE EXPORT CONTROL LAWS AND REGULATIONS.

DRAWN BY	RAF
DATE	15/4/2014
APPROVED BY	SBD
DATE	15/4/2014
REFERENCE	
THIRD ANGLE PROJECTION	

Regal Beloit America, Inc.

DESCRIPTION
TERMINAL BOX ASSY
80-100 FR

MATERIAL | PROCESS/FINISH

SIZE B | DRAWING NUMBER 5354080025 | SHEET 1 OF 1

Uncontrolled Copy

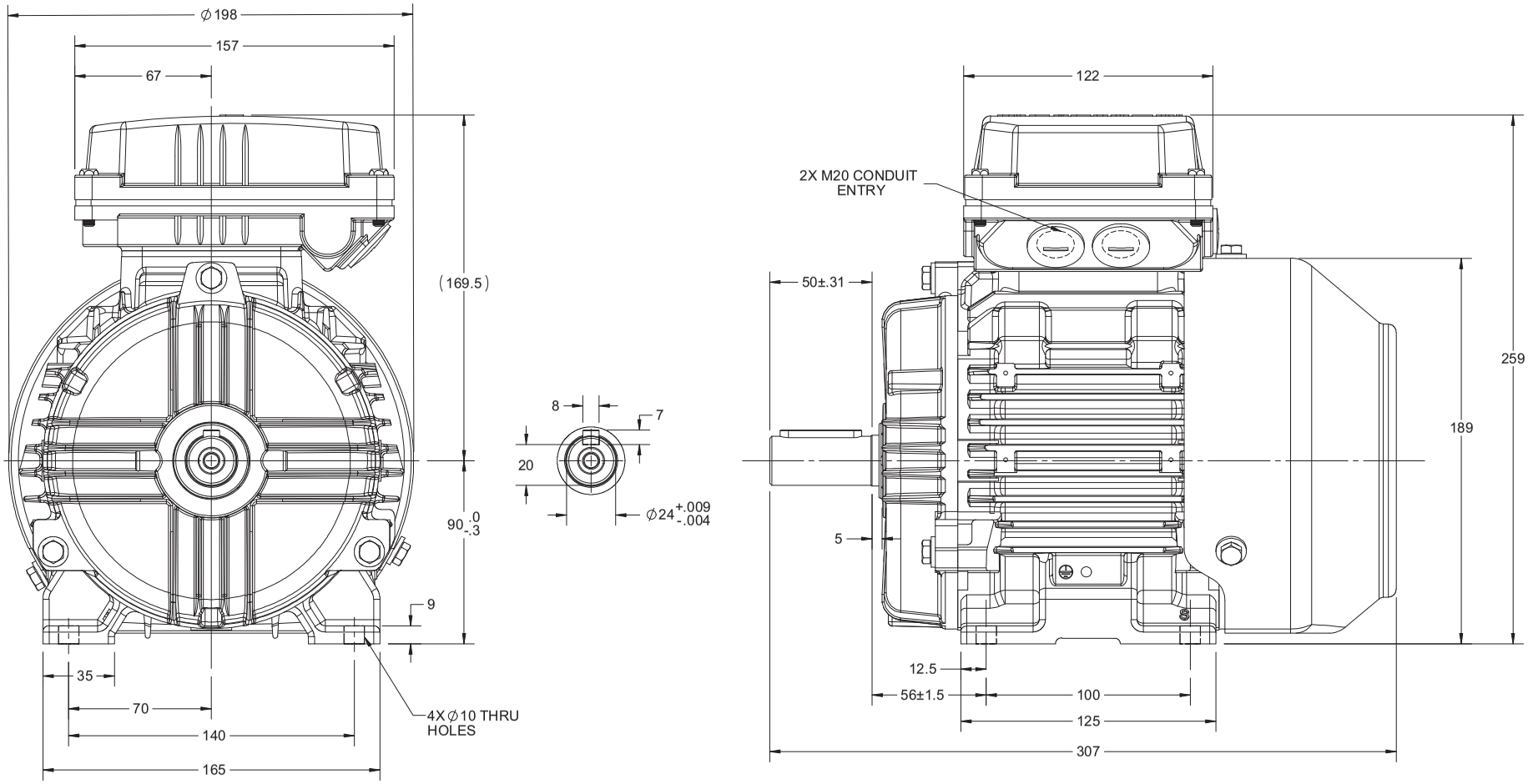

DRAWING REVISION D	REVISION BY I. RAMDAS	DATE 29/06/2018	DRAWN BY RAF	marathon Motors
ECO ECO-0147359	APPROVED BY JAY	DATE 29/06/2018	DATE 07/11/2014	
ECO DESCRIPTION OUTLINE UPDATE AS PER 3D STRUCTURING			APPROVED BY KRK	DESCRIPTION OUTLINE 90-S FR- B3 MTG. MOTOR TYPE:TCA/QCA
			DATE 07/11/2014	
			REFERENCE	MATERIAL / PROCESS/FINISH
			THIRD ANGLE PROJECTION	SIZE B / DRAWING NUMBER 0209000426 / SHEET 1 OF 1

COPYRIGHT REGAL BELOIT AMERICA, INC. ALL RIGHTS RESERVED.
PROPRIETARY AND CONFIDENTIAL INFORMATION - THIS DOCUMENT IS THE PROPERTY OF REGAL BELOIT AMERICA, INC. ("OWNER") AND CONTAINS OWNER'S PROPRIETARY INFORMATION. ANY PERSON, CORPORATION OR OTHER FIRM RECEIVING IT IS DEEMED, BY RECEIVING IT, TO AGREE THAT IT, AND/OR ANY PART OF IT, SHALL NOT BE DISCLOSED TO ANY PERSON, CORPORATION OR OTHER ENTITY, DUPLICATED, AND/OR USED, EXCEPT AS EXPRESSLY APPROVED IN WRITING IN ADVANCE BY OWNER. THIS DOCUMENT SHALL BE RETURNED TO OWNER UPON REQUEST. IT MAY BE SUBJECT TO CERTAIN RESTRICTIONS UNDER APPLICABLE EXPORT CONTROL LAWS AND REGULATIONS.

LT MOTOR DATA SHEET		**BHEL BHADRADRI**
CLAUSE		
No.	PROJECT & PACKAGE:	IE-3 MOTORS
1	**GENERAL**	
i	Manufacturer & country of origin	MEML & INDIA
ii	Equipment driven by motor	FAN
iii	Motor type	SCIM
iv	Quantity	As per Project requirement
2	**DESIGN & PERFORMANCE DATA**	
i	Frame size	80M
ii	Type of duty	S1
iii	Type of enclosure & method of cooling / Degree of protection	TEFC / IC 411 / IP 55
iv	Applicable standard to which motor generally confirms	IS 12615, IEC 60034, IEC 60030, IS 12075, IS 12065 Etc.
v	Type of mounting	IMB3
vi	Direction of rotation viewed from DE	Bi-Directional
vii	Standard continuous rating at 40 deg.C ambient temp. as per Indian Std. (KW)	NA
viii	Derated rating for specified normal condition i.e. 50 deg. C ambient (KW)	0.37
ix	Rated voltage (volts) & Rated frequency(Hz)	415 / 50
x	Permissible variation of	
a	voltage (volts)	± 10%
b	Frequency (Hz)	± 5%
c	Combined voltage & frequency	10%
xi	Minimum permissible starting voltage(V)	85% OF RATED VOLTAGE
xii	Rated speed at rated voltage & frequency	1458
xiii	At rated voltage and frequency	
a	Full load current (A)	0.98
b	No load current (A) (Approx.)	0.57
xiv	Power factor at	
a	100% load & 75% load & 50% load	0.72 / 0.62 / 0.49
b	No load (Approx.)	0.142
c	Starting (Approx.)	0.601
xv	Efficieny (%)at rated voltage & frequency	
a	100% load	73.0
b	75% load	73.0
c	50% load	73.0
xvi	Starting current % FLC at	
a	100% voltage	650%
b	85% voltage	553%
c	80% voltage	520%
xvii	Starting time with minimum permissible Voltage	
a	without driven equipment coupled	< 1.5 Secs.
b	with driven equipment coupled	1.5
xviii	Safe stall time with 110% of rated voltage	
a	From hot condition in sec.	20
b	From cold condition in sec.	48
xix	Torques - % FLT	
a	Starting torque at min. permissible V starting torq at rated V.	0.46
b	Pull up torque at rated voltage	0.54
c	Pull out torque	0.91
d	Min. accelerating torque available	0.46
e	Rated torque - kg-m	0.25
xx	Stator winding resistance per Ph. (Ω @ 20°C) (Indicative)	13.80
xxi	GD square value of motor - kg-m²	0.010
xxii	No. of permissible successive starts when motor is in hot / cold condition	2 / 3
xxiii		
a	Locked rotor KVA input (Inclusive of Tolerance)	5.49
b	Locked rotor KVA / KW (Inclusive of Tolerance)	14.9

LT MOTOR DATA SHEET		**BHEL BHADRADRI**
CLAUSE		
No.	PROJECT & PACKAGE:	IE-3 MOTORS
xxiv	Bearings	
a	Type	DE : BALL / NDE : BALL
b	Manufacturer	SKF, FAG or equivalent
c	Self lubricated or forced lubricated	Self Lubricated
d	Recommended lubricants	GREASE
e	Guaranteed life in hours	40,000
f	Whether dial type thermometer provided	NA
g	Oil pressure guage/switch	NA
i	range	NA
ii	Contact Nos. and ratings	NA
iii	Accuracy	NA
xxv	Vibration	
a	Velocity mm/s	AS PER IS 12075
b	Displacement microns	AS PER IS 12075
xxvi	Noise level db(A) at 1 m at no load	AS PER IS 12065
3	**CONSTRUCTIONAL FEATURES**	
i	Stator winding insulation	
a	Class & type	Class F with temperature rise limited to class B /Varnish
b	Tropicalised (Yes/No)	YES
c	Temperature rise over specificed max.	
	i. cold water temp. of 38 deg. C	NA
	ii. Ambient air 50 deg. C.	70° C
d	Method of temperature measurement	RESISTANCE METHOD
e	Stator winding connection	STAR
f	Number of terminals braught out	6
ii	Type of terminal box for	
a	Stator leads	YES
b	space heater	NA
c	Temperature detectors	NA
d	instrument switch etc.	NA
iii.	For main terminal box	
a	Location	TOP
b	Entry of cables	REFER GAD
c	Recommended cable size (to be matched with cable size envisaged by owner)	3C x 2.5 SQMM CUARMOURED
d	Fault level	50KA for 0.25Sec with suitable back up fuses
iv	Temperature detector for stator winding	NA
a	Type	NA
b	Nos. provided	NA
c	Location	NA
d	make	NA
e	resistance value at 0 deg. C (ohms)	NA
v	space heaters	NA
a	Number	NA
b	Location	NA
c	Power requirement (Watt)	NA
vi	Paint shade	Shade No. 631 as per IS:5
vii	Approx. Weight of	
a	Motor stator	-
b	Motor rotor	-
c	Total weight (kg)	20
4	**CHARACTERISTIC CURVES**	
i	Torque speed characteristic of the motor	ATTACHED
ii	Calibration characteristic of platinum type resistance temperature detector	NA
iii	Calibration characteristic of platinum BTD	NA
iv	Thermal withstand characteristic	ATTACHED
v	Starting current vs. time	ATTACHED
vi	Starting current vs. speed	ATTACHED
vii	Neg. sequence current vs. time	ATTACHED
viii	PF & Efficiency Vs Load.	ATTACHED
NOTE :		

1) ALL PERFORMANCE FIGURES ARE SUBJECT TO IS/IEC TOLERANCES.
2) Fans to be started at closed damper condition only.

Thermal Withstand Curve 100% Voltage

Date:
Customer:
Attention:
Submitted by:

marathon® Motors TerraMAX

TCA 80MC04

IE3 Efficiency

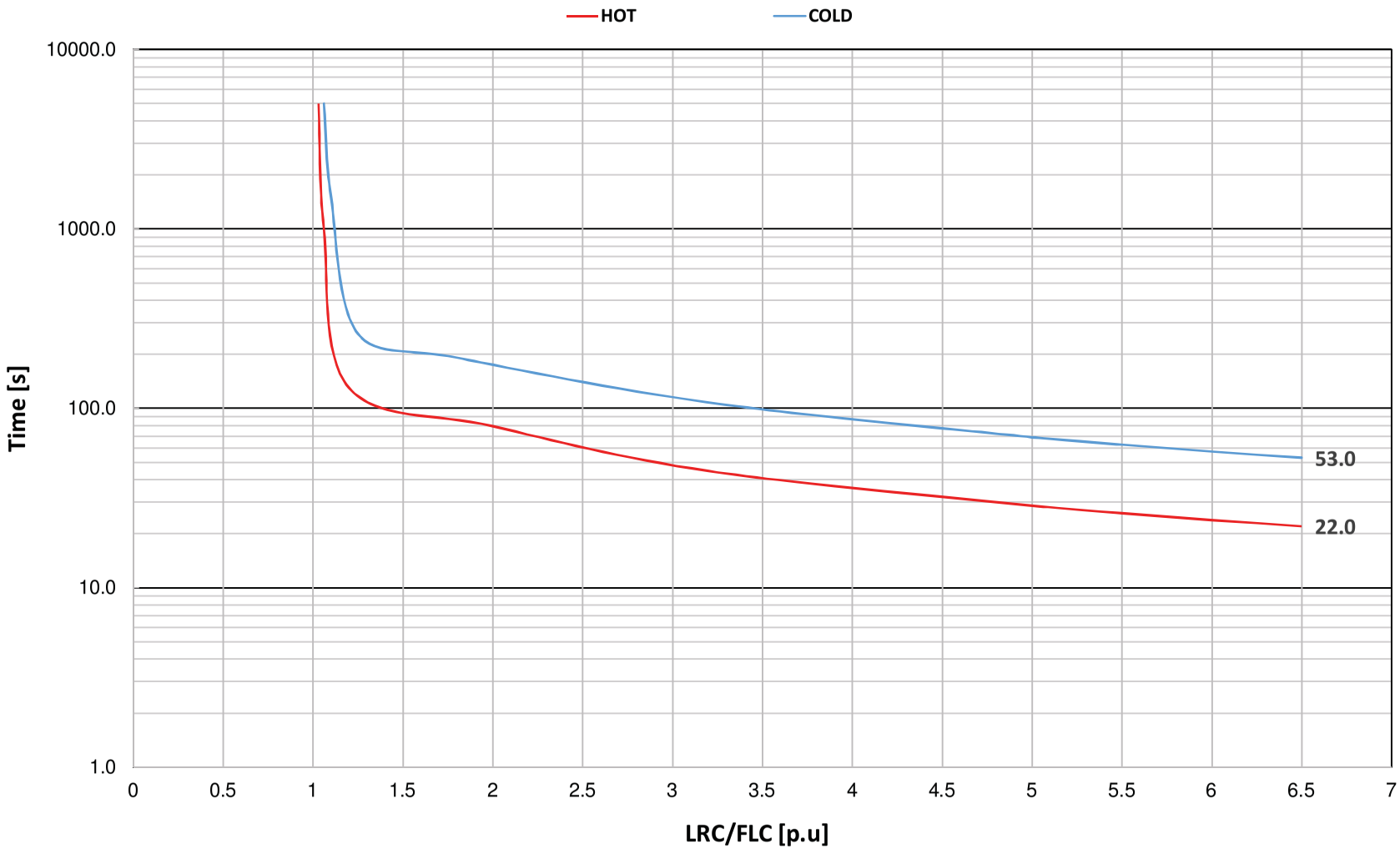

Performance Curves

Date:
Customer:
Attention:
Submitted by:

marathon® Motors TerraMAX™

TCA 80MC04

IE3 Efficiency

Motor Load Data

Load	0%	25%	50%	75%	100%
Current (Amps)	0.57	0.60	0.73	0.85	0.98
Torque (Nm)	0.00	0.81	1.64	2.47	2.44
RPM	1500	1488	1479	1469	1458
Efficiency (%)		60.7	73.0	73.0	73.0
P.F. (%)	14.2	35.7	48.5	62.0	72.0

Motor Speed - Torque Data

	LR	Pull-Up	BD	Rated	Idle
Speed (RPM)	0	136	1164	1458	1500
Current (Amps)	6.4	5.7	3.5	0.98	0.57
Torque (p.u.)	2.60	2.18	3.7	1.00	0.00

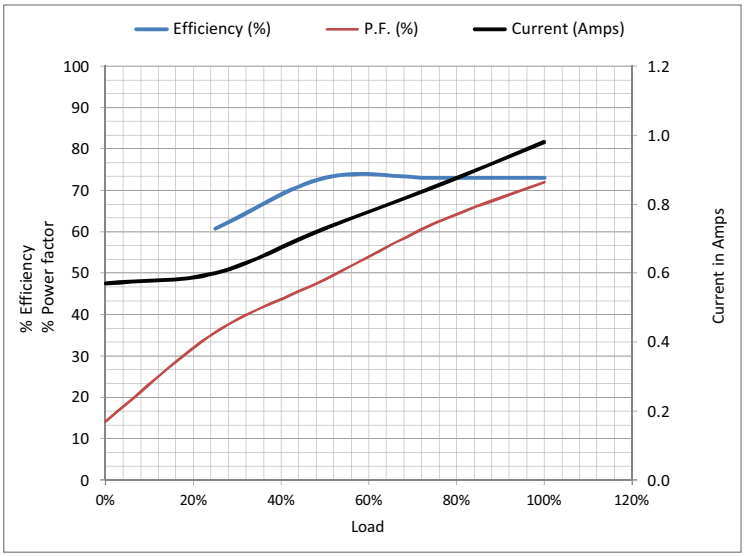

Information Block

kW	0.37	
Sync. RPM	1500	
Frame	80M	
Enclosure	TEFC	
Voltage	415	V
Frequency	50	Hz
Duty	S1	
Ambient	50	° C
Elevation	1,000	meters
Moment of Inertia	0.0026	kg-m²
Motor Weight	19.7	Kgs

Additional Specifications:

TerraMAX IE3 Motor

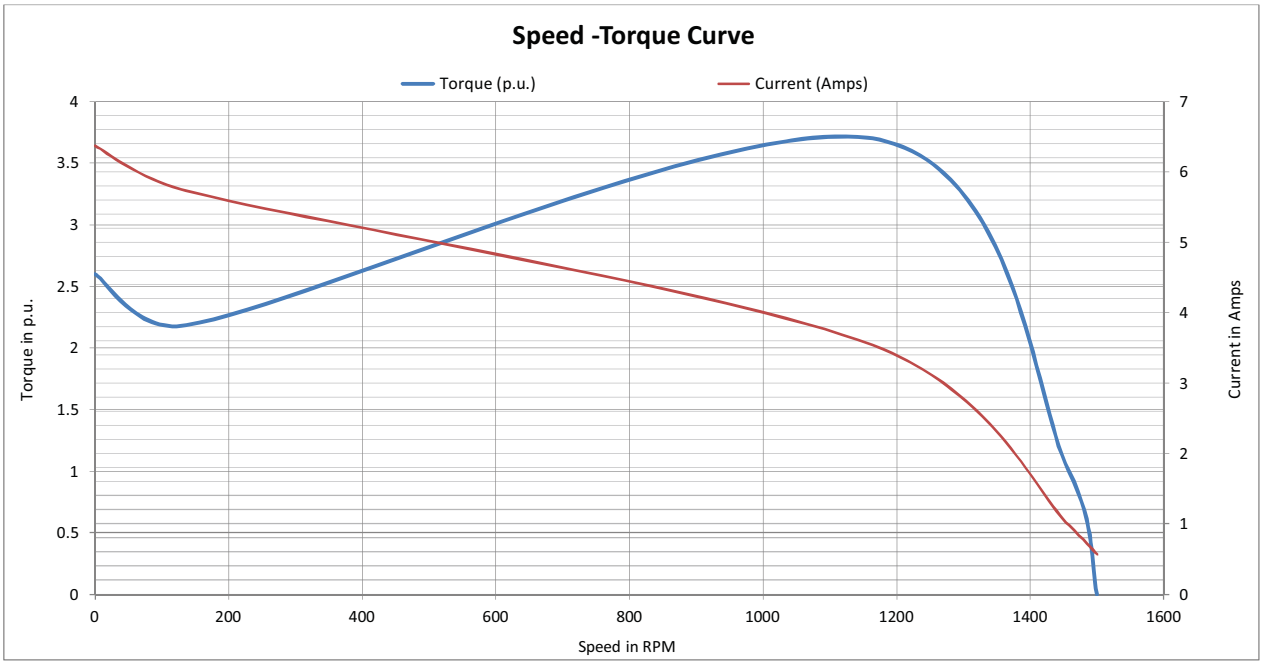

Uncontrolled Copy

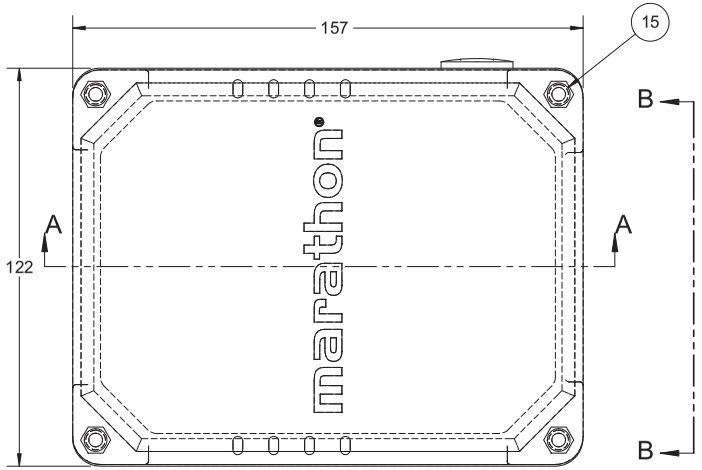

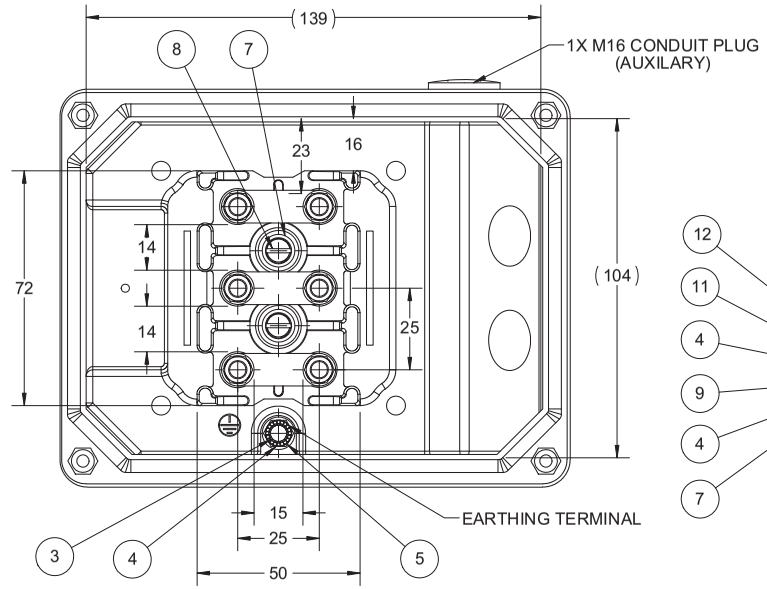

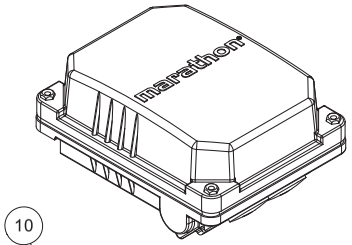

SCALE 1:3

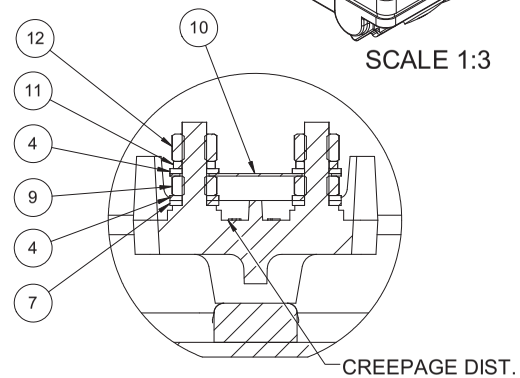

DETAIL C

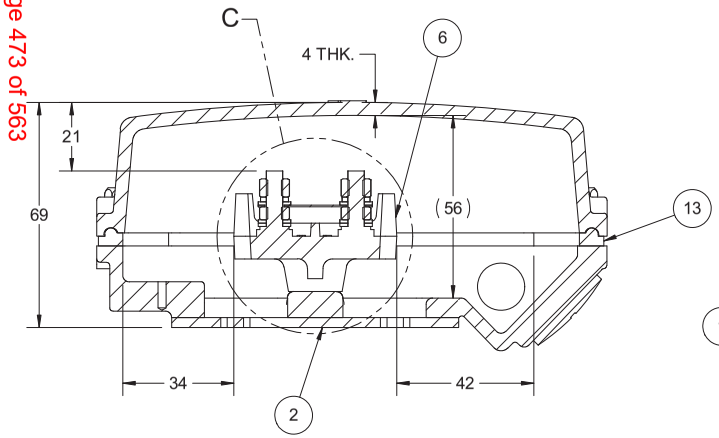

SECTION A-A

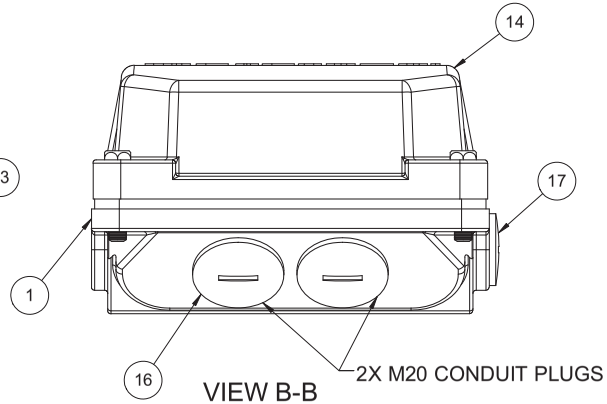

VIEW B-B

BALLOON NUMBER	PART FAMILY	DESCRIPTION	QTY.
1	8351080082	TERMINAL BOX BASE-MACH	1
2	8371080013	GASKET	1
3	423335	M5 - TOOTH WASHER	1
4	423115N	M5 - PLAIN WASHER	13
5	4223215N	M5X10 HEX HD BOLT	1
6	5064080006	TERMINAL BLOCK	1
7	423125	M5 - PLAIN WASHER	8
8	422015	M5X10 PAN CHEESE HD SCREW	2
9	421115	M5 - HEX HD NUT	6
10	8572080002	CONNECTING PLATE	3
11	423225	M5 - SPRING WASHER	6
12	421125N	M5 HEX HD NUT COPPER	6
13	8371080024	GASKET	1
14	8353080028	TERMINAL BOX COVER	1
15	8920000002-001	M5 CAPTIVE SCREW	4
16	8217000003	M20 CONDUIT PLUG	2
17	8217080000	M16 CONDUIT PLUG	1

DRAWING REVISION B	REVISION BY LK	DATE 11/05/2017
ECO ECO-0123509	APPROVED BY JAY	DATE 11/05/2017
ECO DESCRIPTION MODEL UPDATED		

COPYRIGHT REGAL BELOIT AMERICA, INC. ALL RIGHTS RESERVED.
PROPRIETARY AND CONFIDENTIAL INFORMATION - THIS DOCUMENT IS THE PROPERTY OF REGAL BELOIT AMERICA, INC. ("OWNER") AND CONTAINS OWNER'S PROPRIETARY INFORMATION. ANY PERSON, CORPORATION OR OTHER FIRM RECEIVING IT IS DEEMED, BY RECEIVING IT, TO AGREE THAT IT, AND/OR ANY PART OF IT, SHALL NOT BE DISCLOSED TO ANY PERSON, CORPORATION OR OTHER ENTITY, DUPLICATED, AND/OR USED, EXCEPT AS EXPRESSLY APPROVED IN WRITING IN ADVANCE BY OWNER. THIS DOCUMENT SHALL BE RETURNED TO OWNER UPON REQUEST. IT MAY BE SUBJECT TO CERTAIN RESTRICTIONS UNDER APPLICABLE EXPORT CONTROL LAWS AND REGULATIONS.

DRAWN BY	RAF
DATE	15/4/2014
APPROVED BY	SBD
DATE	15/4/2014
REFERENCE	
THIRD ANGLE PROJECTION	

Regal Beloit America, Inc.

DESCRIPTION
TERMINAL BOX ASSY
80-100 FR

MATERIAL | PROCESS/FINISH

SIZE B | DRAWING NUMBER 5354080025 | SHEET 1 OF 1

Uncontrolled Copy

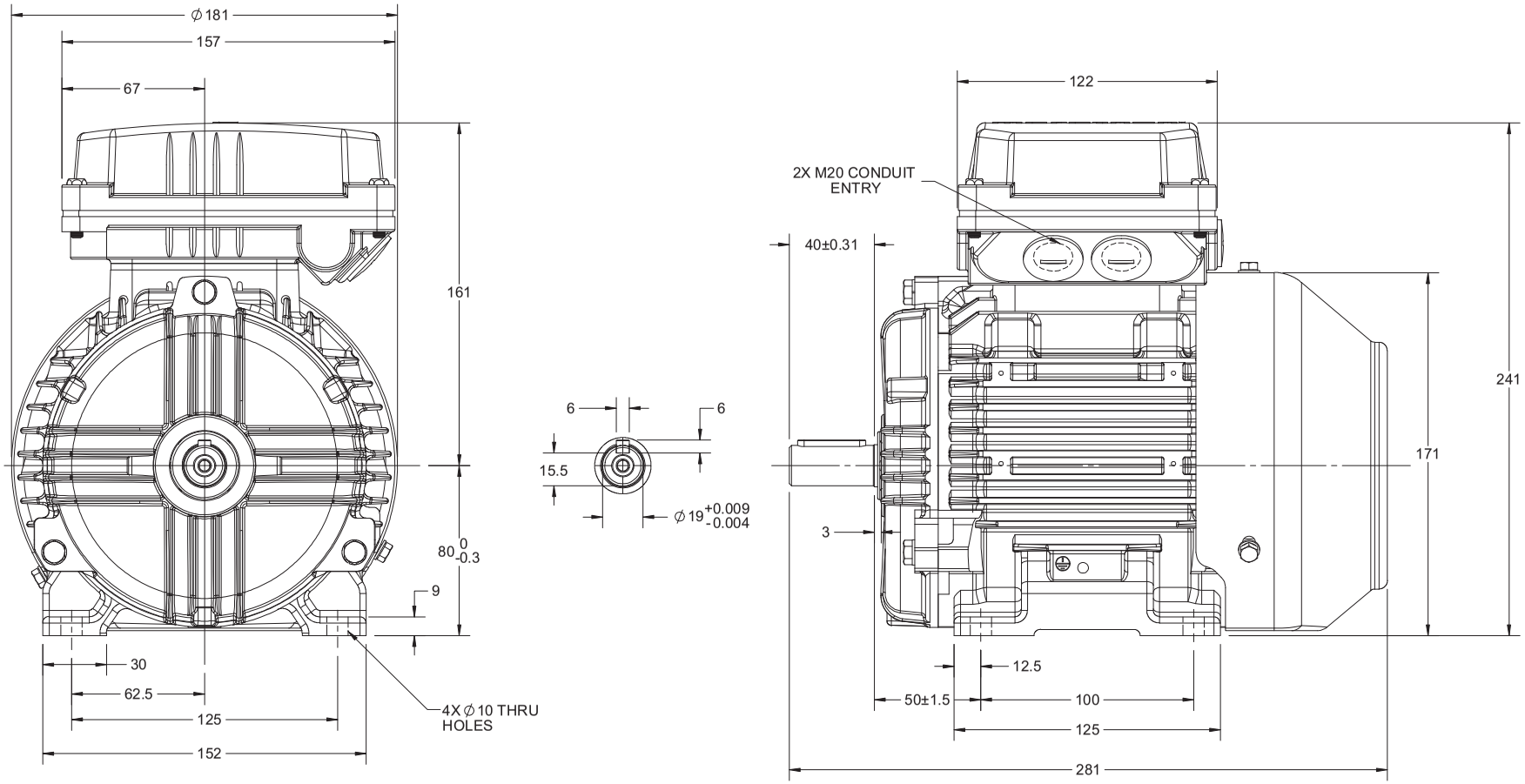

DRAWING REVISION C	REVISION BY S.MUDDA	DATE 20/06/2018		DRAWN BY SMAR	marathon Motors
ECO ECO-0147359	APPROVED BY JAY	DATE 20/06/2018		DATE 21/06/2013	
ECO DESCRIPTION OUTLINE UPDATED AS PER THE NEW 3D STRUCTURING				APPROVED BY JAY	DESCRIPTION OUTLINE 80 FR- B3 MTG. MOTOR TYPE TCA/QCA
				DATE 30/08/2013	
				REFERENCE	MATERIAL / PROCESS/FINISH
				THIRD ANGLE PROJECTION	SIZE B / DRAWING NUMBER 0208000179 / SHEET 1 OF 1

COPYRIGHT REGAL BELOIT AMERICA, INC. ALL RIGHTS RESERVED.
PROPRIETARY AND CONFIDENTIAL INFORMATION - THIS DOCUMENT IS THE PROPERTY OF REGAL BELOIT AMERICA, INC. ("OWNER") AND CONTAINS OWNER'S PROPRIETARY INFORMATION. ANY PERSON, CORPORATION OR OTHER FIRM RECEIVING IT IS DEEMED, BY RECEIVING IT, TO AGREE THAT IT, AND/OR ANY PART OF IT, SHALL NOT BE DISCLOSED TO ANY PERSON, CORPORATION OR OTHER ENTITY, DUPLICATED, AND/OR USED, EXCEPT AS EXPRESSLY APPROVED IN WRITING IN ADVANCE BY OWNER. THIS DOCUMENT SHALL BE RETURNED TO OWNER UPON REQUEST. IT MAY BE SUBJECT TO CERTAIN RESTRICTIONS UNDER APPLICABLE EXPORT CONTROL LAWS AND REGULATIONS.

	LT MOTOR DATA SHEET	**BHEL BHADRADRI**
CLAUSE		
No.	PROJECT & PACKAGE:	IE-3 MOTORS
1	**GENERAL**	
i	Manufacturer & country of origin	MEML & INDIA
ii	Equipment driven by motor	FAN
iii	Motor type	SCIM
iv	Quantity	As per Project requirement
2	**DESIGN & PERFORMANCE DATA**	
i	Frame size	132M
ii	Type of duty	S1
iii	Type of enclosure & method of cooling / Degree of protection	TEFC / IC 411 / IP 55
iv	Applicable standard to which motor generally confirms	IS 12615, IEC 60034, IEC 60030, IS 12075, IS 12065 Etc.
v	Type of mounting	IMV6
vi	Direction of rotation viewed from DE	Bi-Directional
vii	Standard continuous rating at 40 deg.C ambient temp. as per Indian Std. (KW)	NA
viii	Derated rating for specified normal condition i.e. 50 deg. C ambient (KW)	5.5
ix	Rated voltage (volts) & Rated frequency(Hz)	415 / 50
x	Permissible variation of	
a	voltage (volts)	± 10%
b	Frequency (Hz)	± 5%
c	Combined voltage & frequency	10%
xi	Minimum permissible starting voltage(V)	85% OF RATED VOLTAGE
xii	Rated speed at rated voltage & frequency	975
xiii	At rated voltage and frequency	
a	Full load current (A)	11.4
b	No load current (A) (Approx.)	5.80
xiv	Power factor at	
a	100% load & 75% load & 50% load	0.76 / 0.69 / 0.55
b	No load (Approx.)	0.060
c	Starting (Approx.)	0.481
xv	Efficieny (%)at rated voltage & frequency	
a	100% load	88.0
b	75% load	88.0
c	50% load	88.0
xvi	Starting current % FLC at	
a	100% voltage	620%
b	85% voltage	527%
c	80% voltage	496%
xvii	Starting time with minimum permissible Voltage	
a	without driven equipment coupled	< 2 Secs.
b	with driven equipment coupled	3.3
xviii	Safe stall time with 110% of rated voltage	
a	From hot condition in sec.	8
b	From cold condition in sec.	26
xix	Torques - % FLT	
a	Starting torque at min. permissible V starting torq at rated V.	9.13
b	Pull up torque at rated voltage	10.62
c	Pull out torque	14.83
d	Min. accelerating torque available	9.13
e	Rated torque - kg-m	5.49
xx	Stator winding resistance per Ph. (Ω @ 20°C) (Indicative)	2.058
xxi	GD square value of motor - kg-m²	0.296
xxii	No. of permissible successive starts when motor is in hot / cold condition	2 / 3
xxiii		
a	Locked rotor KVA input (Inclusive of Tolerance)	61.0
b	Locked rotor KVA / KW (Inclusive of Tolerance)	11.1

	LT MOTOR DATA SHEET	**BHEL BHADRADRI**
CLAUSE		
No.	PROJECT & PACKAGE:	IE-3 MOTORS
xxiv	Bearings	
a	Type	DE : BALL / NDE : BALL
b	Manufacturer	SKF, FAG or equivalent
c	Self lubricated or forced lubricated	Self Lubricated
d	Recommended lubricants	GREASE
e	Guaranteed life in hours	40,000
f	Whether dial type thermometer provided	NA
g	Oil pressure guage/switch	NA
i	range	NA
ii	Contact Nos. and ratings	NA
iii	Accuracy	NA
xxv	Vibration	
a	Velocity mm/s	AS PER IS 12075
b	Displacement microns	AS PER IS 12075
xxvi	Noise level db(A) at 1 m at no load	AS PER IS 12065
3	**CONSTRUCTIONAL FEATURES**	
i	Stator winding insulation	
a	Class & type	Class F with temperature rise limited to class B /Varnish
b	Tropicalised (Yes/No)	YES
c	Temperature rise over specificed max.	
	i. cold water temp. of 38 deg. C	NA
	ii. Ambient air 50 deg. C.	70° C
d	Method of temperature measurement	RESISTANCE METHOD
e	Stator winding connection	DELTA
f	Number of terminals braught out	6
ii	Type of terminal box for	
a	Stator leads	YES
b	space heater	NA
c	Temperature detectors	NA
d	instrument switch etc.	NA
iii.	For main terminal box	
a	Location	TOP
b	Entry of cables	REFER GAD
c	Recommended cable size (to be matched with cable size envisaged by owner)	3C x 10 SQMM AL ARMOURED
d	Fault level	50KA for 0.25Sec with suitable back up fuses
iv	Temperature detector for stator winding	NA
a	Type	NA
b	Nos. provided	NA
c	Location	NA
d	make	NA
e	resistance value at 0 deg. C (ohms)	NA
v	space heaters	NA
a	Number	NA
b	Location	NA
c	Power requirement (Watt)	NA
vi	Paint shade	Shade No. 631 as per IS:5
vii	Approx. Weight of	
a	Motor stator	-
b	Motor rotor	-
c	Total weight (kg)	92
4	**CHARACTERISTIC CURVES**	
i	Torque speed characteristic of the motor	ATTACHED
ii	Calibration characteristic of platinum type resistance temperature detector	NA
iii	Calibration characteristic of platinum BTD	NA
iv	Thermal withstand characteristic	ATTACHED
v	Starting current vs. time	ATTACHED
vi	Starting current vs. speed	ATTACHED
vii	Neg. sequence current vs. time	ATTACHED
viii	PF & Efficiency Vs Load.	ATTACHED
NOTE :		

1) ALL PERFORMANCE FIGURES ARE SUBJECT TO IS/IEC TOLERANCES.
2) Fans to be started at closed damper condition only.

Thermal Withstand Curve 100% Voltage

Date:
Customer:
Attention:
Submitted by:

marathon® Motors TerraMAX

TCA 132MA06

IE3 Efficiency

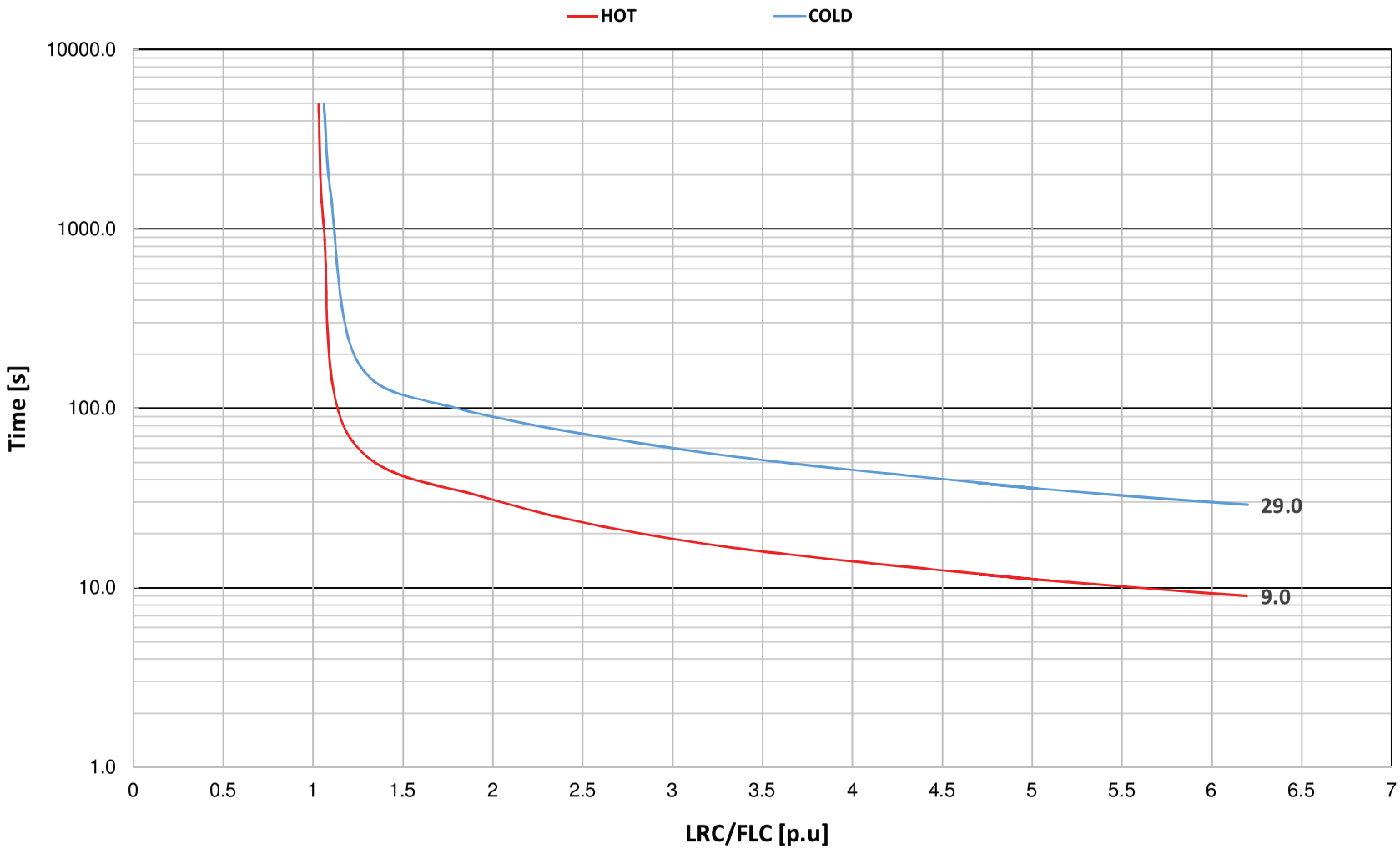

Performance Curves

Date:
Customer:
Attention:
Submitted by:

marathon® Motors TerraMAX™

TCA 132MB06

IE3 Efficiency

Motor Load Data

Load	0%	25%	50%	75%	100%
Current (Amps)	5.8	6.2	7.4	9.1	11.4
Torque (Nm)	0.00	13.5	27.1	41.0	54.9
RPM	1000	994	988	982	975
Efficiency (%)		83.7	88.8	88.0	88.0
P.F. (%)	6.0	37.5	55.5	69.1	76.2

Motor Speed - Torque Data

	LR	Pull-Up	BD	Rated	Idle
Speed (RPM)	0	91	821	975	1000
Current (Amps)	70.8	63.7	42.7	11.4	5.8
Torque (p.u.)	2.26	1.90	2.73	1.00	0.00

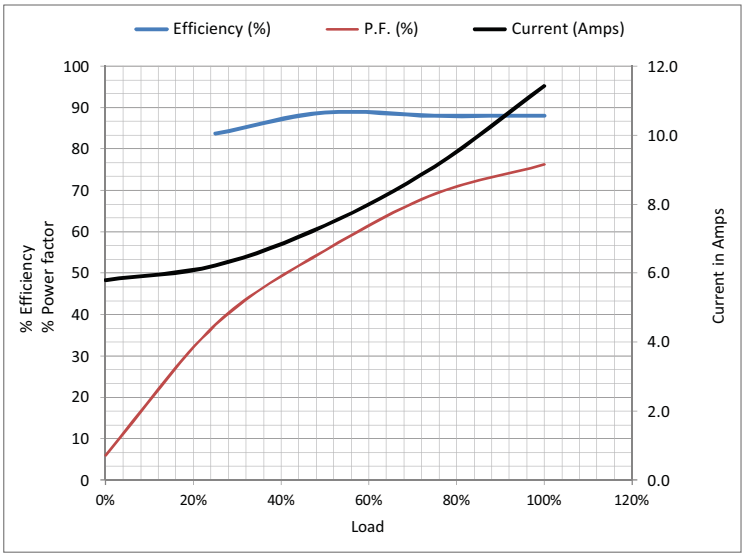

Information Block

kW	5.5	
Sync. RPM	1000	
Frame	132M	
Enclosure	TEFC	
Voltage	415	V
Frequency	50	Hz
Duty	S1	
Ambient	50	° C
Elevation	1,000	meters
Moment of Inertia	0.0744	kg-m²
Motor Weight	91.5	Kgs

Additional Specifications:

TerraMAX IE3 Motor

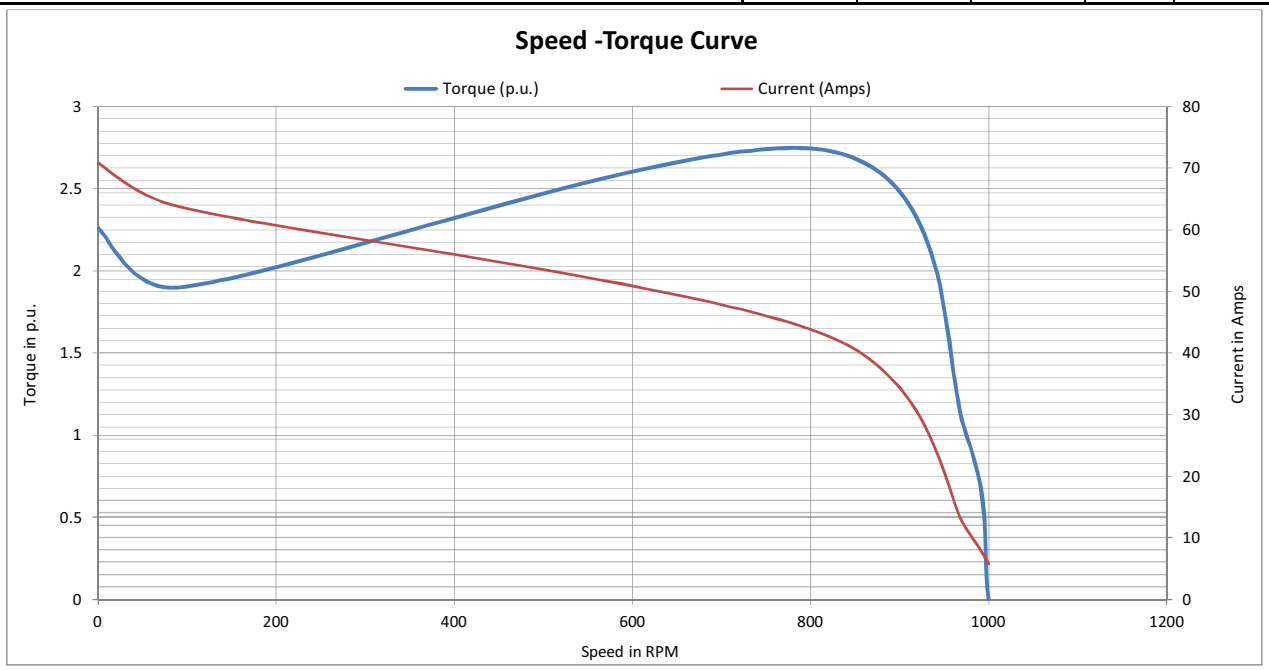

Uncontrolled Copy

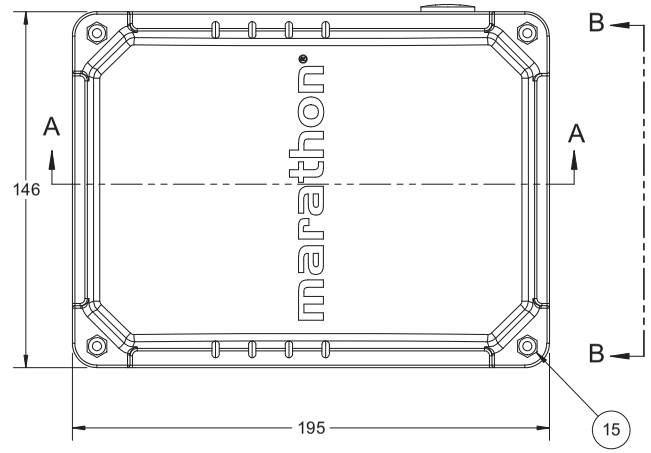

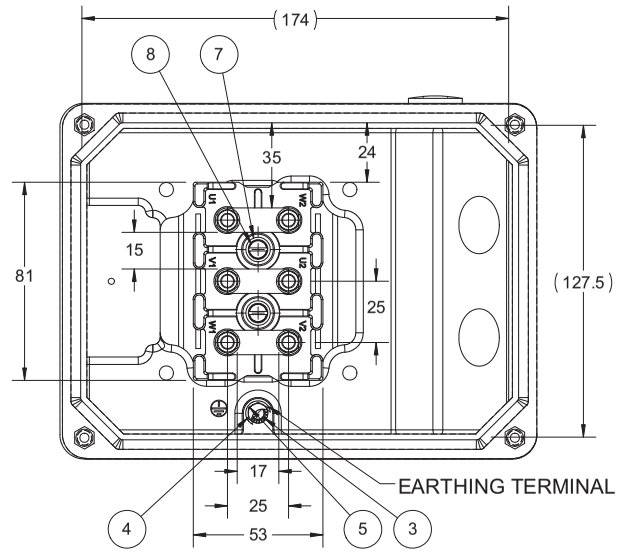

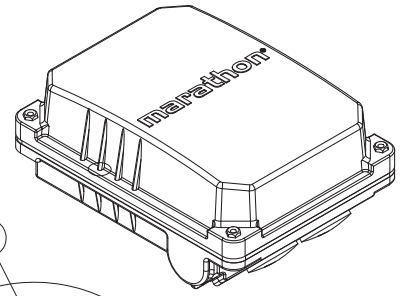

SCALE 1:3

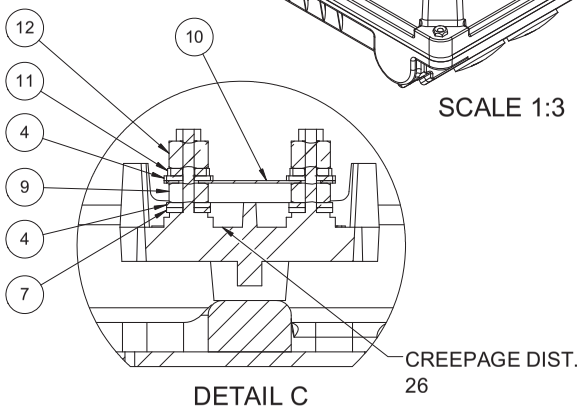

DETAIL C

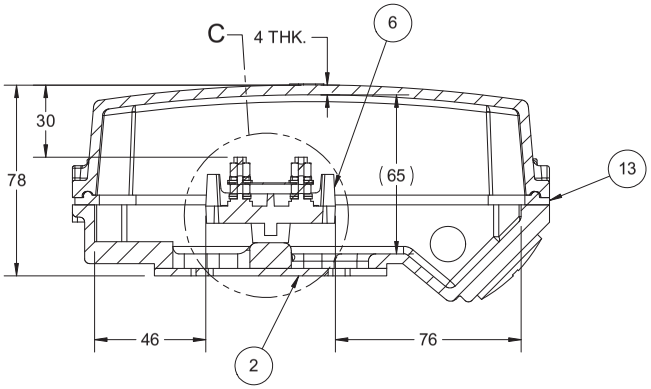

SECTION A-A

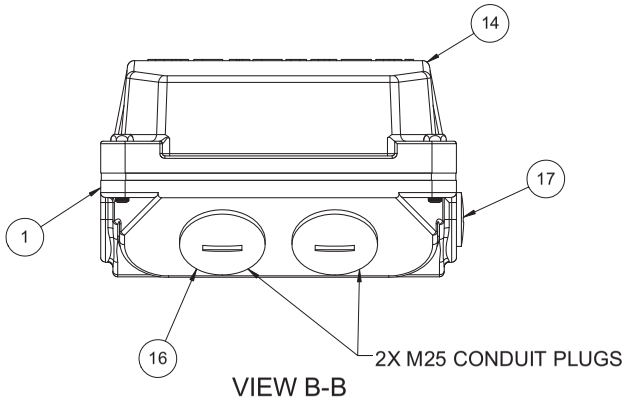

VIEW B-B

BALLOON NUMBER	PART FAMILY	DESCRIPTION	QTY.
1	8351112091	TERMINAL BOX BASE-MACH	1
2	8371112024	GASKET	1
3	423335	M5 - TOOTH WASHER	1
4	423115N	M5 - PLAIN WASHER	13
5	4223215N	M5X10 HEX HD BOLT	1
6	5064112006	TERMINAL BLOCK	1
7	423125	M5 - PLAIN WASHER	8
8	422015	M5X20 PAN CHEESE HD SCREW	2
9	421115	M5 - HEX HD NUT	6
10	8572080002	CONNECTING PLATE	3
11	423225	M5 - SPRING WASHER	6
12	421125N	M5 HEX HD NUT COPPER	6
13	8371112038	GASKET	1
14	8353112029	TERMINAL BOX COVER	1
15	8920000002-001	M5 CAPTIVE SCREW	4
16	8217080002	M25 CONDUIT PLUG	2
17	8217080000	M16 CONDUIT PLUG	1

DRAWING REVISION B	REVISION BY LK	DATE 11/05/2017
ECO ECO-0123509	APPROVED BY JAY	DATE 11/05/2017
ECO DESCRIPTION MODEL UPDATED		

COPYRIGHT REGAL BELOIT AMERICA, INC. ALL RIGHTS RESERVED.
PROPRIETARY AND CONFIDENTIAL INFORMATION - THIS DOCUMENT IS THE PROPERTY OF REGAL BELOIT AMERICA, INC. ("OWNER") AND CONTAINS OWNER'S PROPRIETARY INFORMATION. ANY PERSON, CORPORATION OR OTHER FIRM RECEIVING IT IS DEEMED, BY RECEIVING IT, TO AGREE THAT IT, AND/OR ANY PART OF IT, SHALL NOT BE DISCLOSED TO ANY PERSON, CORPORATION OR OTHER ENTITY, DUPLICATED, AND/OR USED, EXCEPT AS EXPRESSLY APPROVED IN WRITING IN ADVANCE BY OWNER. THIS DOCUMENT SHALL BE RETURNED TO OWNER UPON REQUEST. IT MAY BE SUBJECT TO CERTAIN RESTRICTIONS UNDER APPLICABLE EXPORT CONTROL LAWS AND REGULATIONS.

DRAWN BY SMR	REGAL™ Regal Beloit America, Inc.	
DATE 23-07-13		
APPROVED BY JAY	DESCRIPTION TERMINAL BOX ASSY 132 FR.	
DATE 23-07-13		
REFERENCE	MATERIAL	PROCESS/FINISH
THIRD ANGLE PROJECTION	SIZE B / DRAWING NUMBER 5354112040	SHEET 1 OF 1

Uncontrolled Copy

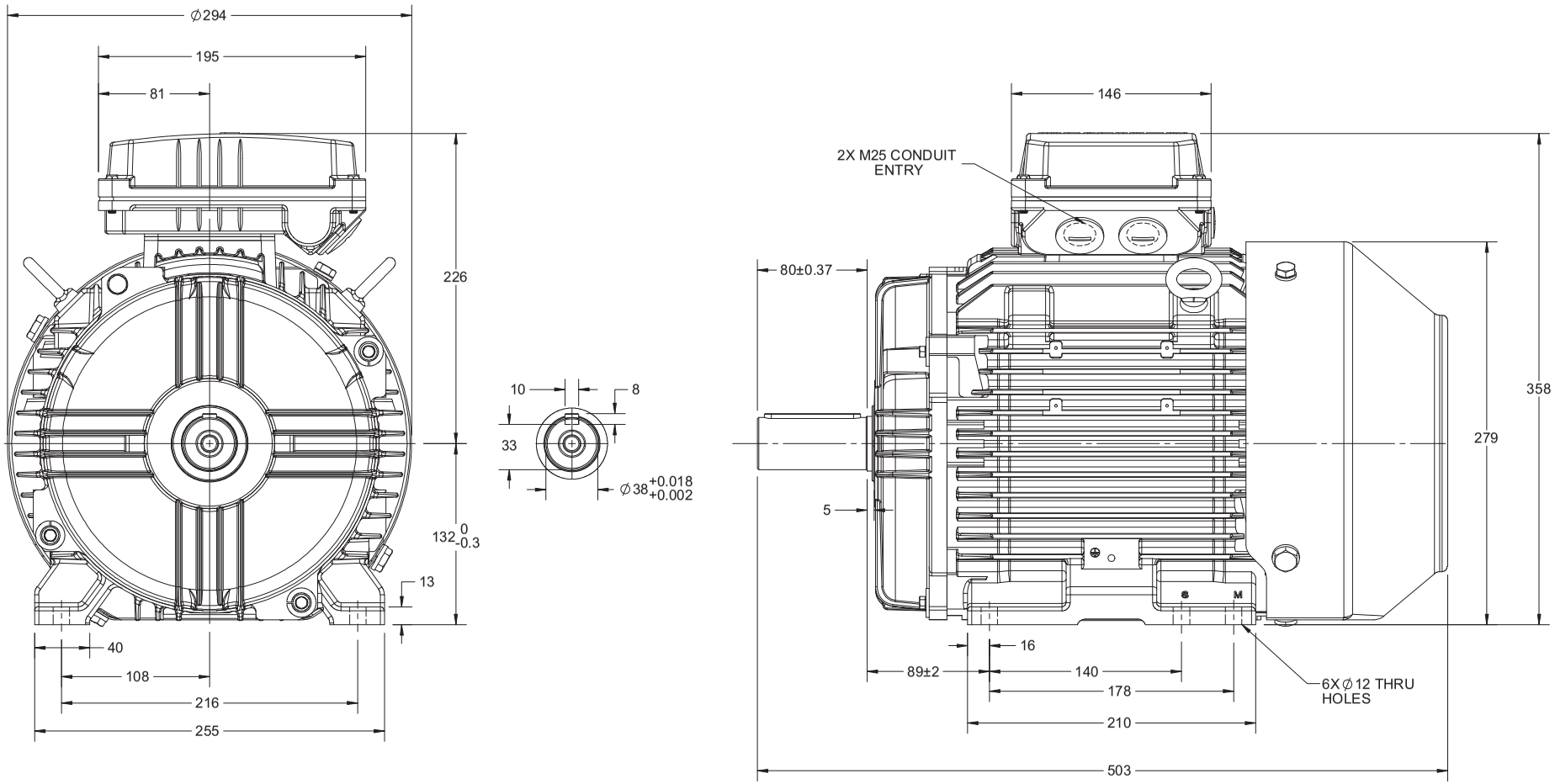

DRAWING REVISION C	REVISION BY S.MUDDA	DATE 25/06/2018		DRAWN BY SMAR	marathon Motors
ECO ECO-0147359	APPROVED BY JAY	DATE 25/06/2018		DATE 05/09/13	
ECO DESCRIPTION OUTLINE UPDATED AS PER NEW 3D STRUCTURING				APPROVED BY JAY	DESCRIPTION OUTLINE 132 FR.- B3 MTG. MOTOR TYPE TCA\QCA
				DATE 05/09/13	
				REFERENCE	MATERIAL / PROCESS/FINISH
				THIRD ANGLE PROJECTION	SIZE B / DRAWING NUMBER 0213200587 / SHEET 1 OF 1

COPYRIGHT REGAL BELOIT AMERICA, INC. ALL RIGHTS RESERVED.
PROPRIETARY AND CONFIDENTIAL INFORMATION - THIS DOCUMENT IS THE PROPERTY OF REGAL BELOIT AMERICA, INC. ("OWNER") AND CONTAINS OWNER'S PROPRIETARY INFORMATION. ANY PERSON, CORPORATION OR OTHER FIRM RECEIVING IT IS DEEMED, BY RECEIVING IT, TO AGREE THAT IT, AND/OR ANY PART OF IT, SHALL NOT BE DISCLOSED TO ANY PERSON, CORPORATION OR OTHER ENTITY, DUPLICATED, AND/OR USED, EXCEPT AS EXPRESSLY APPROVED IN WRITING IN ADVANCE BY OWNER. THIS DOCUMENT SHALL BE RETURNED TO OWNER UPON REQUEST. IT MAY BE SUBJECT TO CERTAIN RESTRICTIONS UNDER APPLICABLE EXPORT CONTROL LAWS AND REGULATIONS.

	LT MOTOR DATA SHEET	**BHEL BHADRADRI**
CLAUSE		
No.	PROJECT & PACKAGE:	IE-3 MOTORS
1	**GENERAL**	
i	Manufacturer & country of origin	MEML & INDIA
ii	Equipment driven by motor	FAN
iii	Motor type	SCIM
iv	Quantity	104
2	**DESIGN & PERFORMANCE DATA**	
i	Frame size	112M
ii	Type of duty	S1
iii	Type of enclosure & method of cooling / Degree of protection	TEFC / IC 411 / IP 55
iv	Applicable standard to which motor generally confirms	IS 12615, IEC 60034, IEC 60030, IS 12075, IS 12065 Etc.
v	Type of mounting	IMV6
vi	Direction of rotation viewed from DE	Bi-Directional
vii	Standard continuous rating at 40 deg.C ambient temp. as per Indian Std. (KW)	NA
viii	Derated rating for specified normal condition i.e. 50 deg. C ambient (KW)	2.2
ix	Rated voltage (volts) & Rated frequency(Hz)	415 / 50
x	Permissible variation of	
a	voltage (volts)	± 10%
b	Frequency (Hz)	± 5%
c	Combined voltage & frequency	10%
xi	Minimum permissible starting voltage(V)	85% OF RATED VOLTAGE
xii	Rated speed at rated voltage & frequency	958
xiii	At rated voltage and frequency	
a	Full load current (A)	5.00
b	No load current (A) (Approx.)	3.00
xiv	Power factor at	
a	100% load & 75% load & 50% load	0.73 / 0.65 / 0.50
b	No load (Approx.)	0.087
c	Starting (Approx.)	0.618
xv	Efficieny (%)at rated voltage & frequency	
a	100% load	84.3
b	75% load	84.3
c	50% load	82.4
xvi	Starting current % FLC at	
a	100% voltage	590%
b	85% voltage	502%
c	80% voltage	472%
xvii	Starting time with minimum permissible Voltage	
a	without driven equipment coupled	< 2 Secs.
b	with driven equipment coupled	1.7
xviii	Safe stall time with 110% of rated voltage	
a	From hot condition in sec.	11
b	From cold condition in sec.	24
xix	Torques - % FLT	
a	Starting torque at min. permissible V starting torq at rated V.	4.04
b	Pull up torque at rated voltage	4.70
c	Pull out torque	6.26
d	Min. accelerating torque available	4.04
e	Rated torque - kg-m	2.24
xx	Stator winding resistance per Ph. (Ω @ 20°C) (Indicative)	2.540
xxi	GD square value of motor - kg-m²	0.064
xxii	No. of permissible successive starts when motor is in hot / cold condition	2 / 3
xxiii		
a	Locked rotor KVA input (Inclusive of Tolerance)	25.4
b	Locked rotor KVA / KW (Inclusive of Tolerance)	11.6

	LT MOTOR DATA SHEET	**BHEL BHADRADRI**
CLAUSE		
No.	PROJECT & PACKAGE:	IE-3 MOTORS
xxiv	Bearings	
a	Type	DE : BALL / NDE : BALL
b	Manufacturer	SKF, FAG or equivalent
c	Self lubricated or forced lubricated	Self Lubricated
d	Recommended lubricants	GREASE
e	Guaranteed life in hours	40,000
f	Whether dial type thermometer provided	NA
g	Oil pressure guage/switch	NA
i	range	NA
ii	Contact Nos. and ratings	NA
iii	Accuracy	NA
xxv	Vibration	
a	Velocity mm/s	AS PER IS 12075
b	Displacement microns	AS PER IS 12075
xxvi	Noise level db(A) at 1 m at no load	AS PER IS 12065
3	**CONSTRUCTIONAL FEATURES**	
i	Stator winding insulation	
a	Class & type	Class F with temperature rise limited to class B /Varnish
b	Tropicalised (Yes/No)	YES
c	Temperature rise over specificed max.	
	i. cold water temp. of 38 deg. C	NA
	ii. Ambient air 50 deg. C.	70° C
d	Method of temperature measurement	RESISTANCE METHOD
e	Stator winding connection	STAR
f	Number of terminals braught out	6
ii	Type of terminal box for	
a	Stator leads	YES
b	space heater	NA
c	Temperature detectors	NA
d	instrument switch etc.	NA
iii.	For main terminal box	
a	Location	TOP
b	Entry of cables	REFER GAD
c	Recommended cable size (to be matched with cable size envisaged by owner)	3C x 2.5 SQMM CU ARMOURED
d	Fault level	50KA for 0.25Sec with suitable back up fuses
iv	Temperature detector for stator winding	NA
a	Type	NA
b	Nos. provided	NA
c	Location	NA
d	make	NA
e	resistance value at 0 deg. C (ohms)	NA
v	space heaters	NA
a	Number	NA
b	Location	NA
c	Power requirement (Watt)	NA
vi	Paint shade	Shade No. 631 as per IS:5
vii	Approx. Weight of	
a	Motor stator	-
b	Motor rotor	-
c	Total weight (kg)	47
4	**CHARACTERISTIC CURVES**	
i	Torque speed characteristic of the motor	ATTACHED
ii	Calibration characteristic of platinum type resistance temperature detector	NA
iii	Calibration characteristic of platinum BTD	NA
iv	Thermal withstand characteristic	ATTACHED
v	Starting current vs. time	ATTACHED
vi	Starting current vs. speed	ATTACHED
vii	Neg. sequence current vs. time	ATTACHED
viii	PF & Efficiency Vs Load.	ATTACHED
NOTE :		

1) ALL PERFORMANCE FIGURES ARE SUBJECT TO IS/IEC TOLERANCES.
2) Fans to be started at closed damper condition only.

Thermal Withstand Curve 100% Voltage

Date:
Customer:
Attention:
Submitted by:

marathon® Motors TerraMAX

TCA 112MA06

IE3 Efficiency

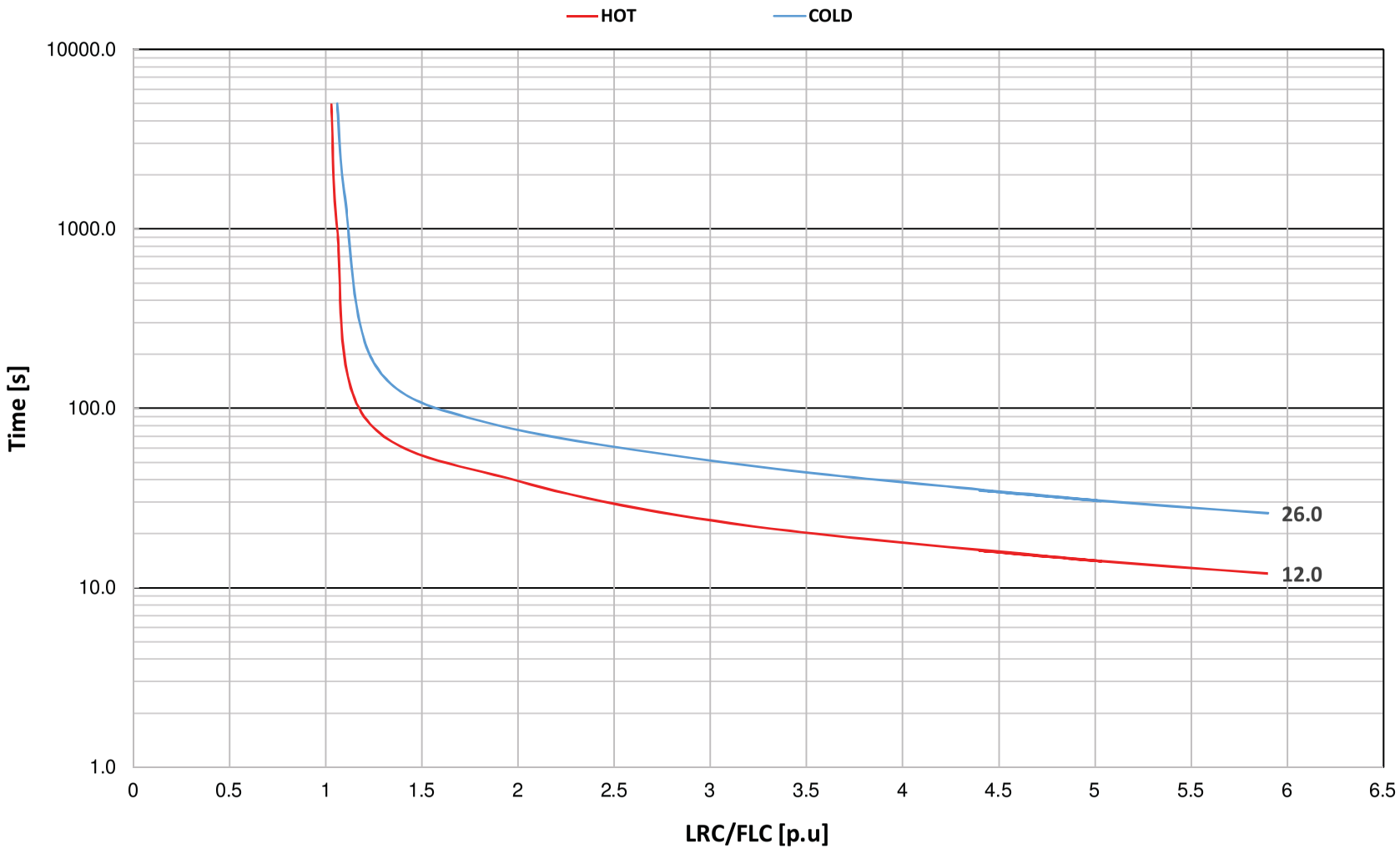

Performance Curves

Date:
Customer:
Attention:
Submitted by:

marathon® Motors TerraMAX™

TCA 112MA06

IE3 Efficiency

Motor Load Data

Load	0%	25%	50%	75%	100%
Current (Amps)	2.98	3.1	3.5	4.1	5.0
Torque (Nm)	0.00	5.4	10.9	16.6	22.3
RPM	1000	990	981	970	958
Efficiency (%)		74.1	82.4	84.3	84.3
P.F. (%)	8.7	34.3	50.3	64.8	73.5

Motor Speed - Torque Data

	LR	Pull-Up	BD	Rated	Idle
Speed (RPM)	0	91	664	958	1000
Current (Amps)	29.2	26.3	19.6	5.0	2.98
Torque (p.u.)	2.46	2.07	2.78	1.00	0.00

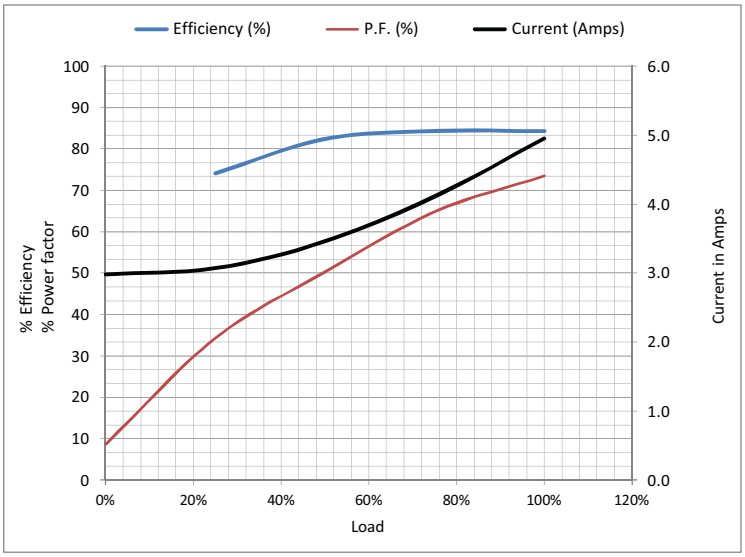

Information Block

kW	2.20	
Sync. RPM	1000	
Frame	112M	
Enclosure	TEFC	
Voltage	415	V
Frequency	50	Hz
Duty	S1	
Ambient	50	° C
Elevation	1,000	meters
Moment of Inertia	0.0158	kg-m²
Motor Weight	46.9	Kgs

Additional Specifications:

TerraMAX IE3 Motor

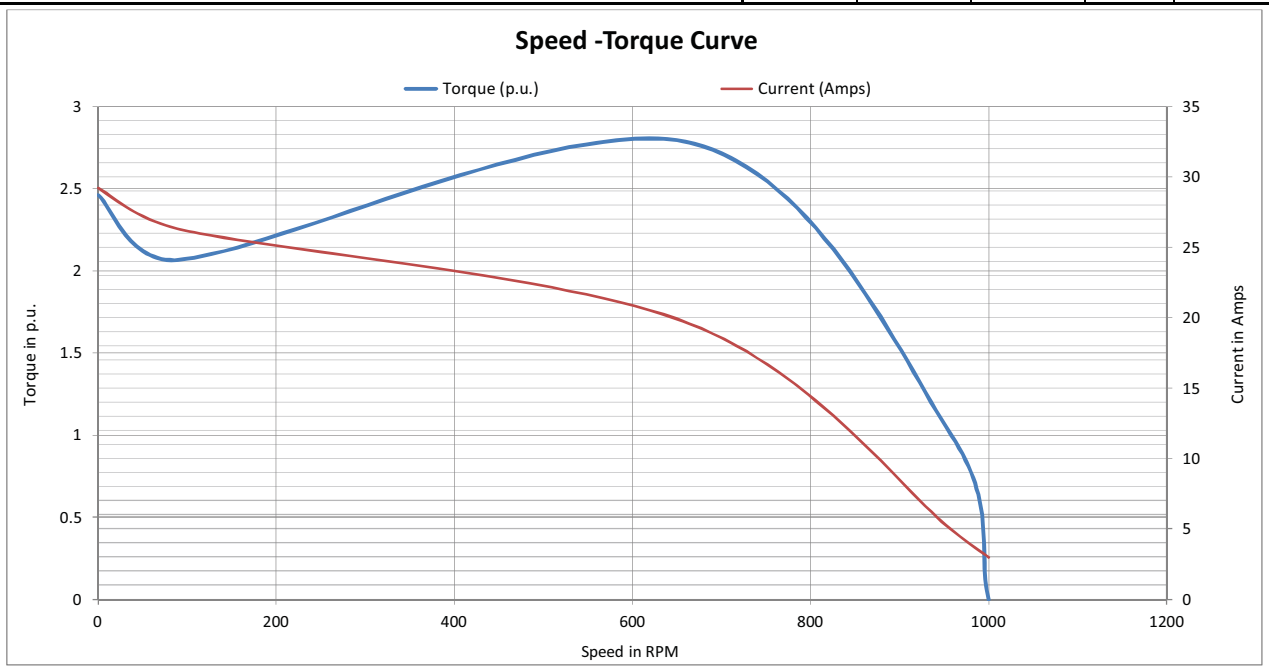

Uncontrolled Copy

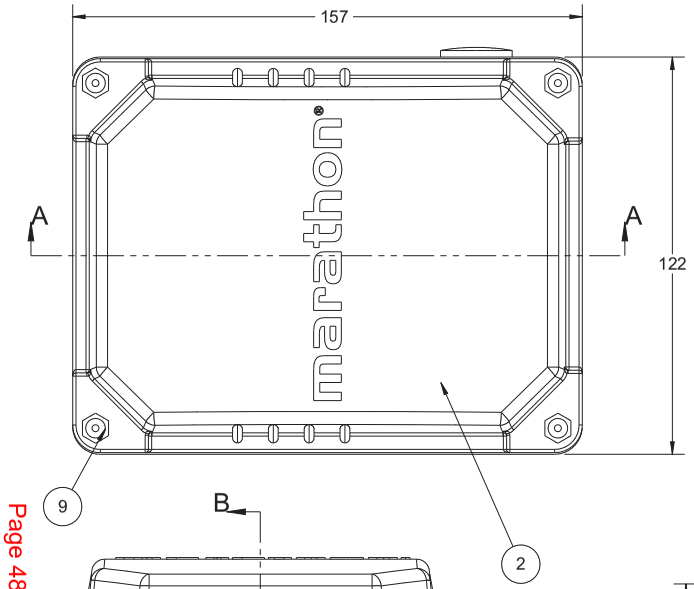

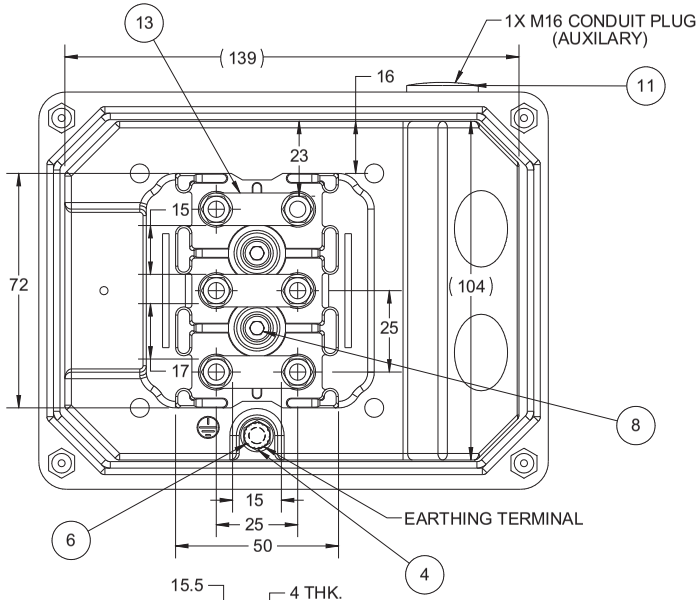

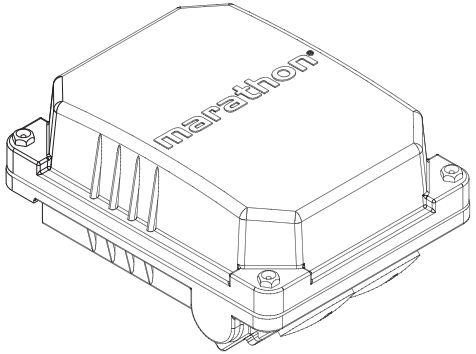

SCALE 1:2

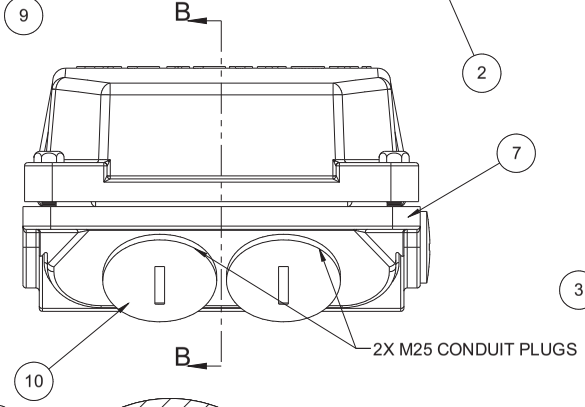

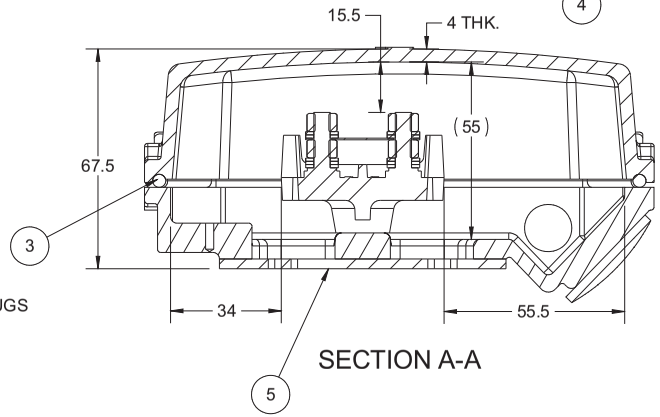

SECTION A-A

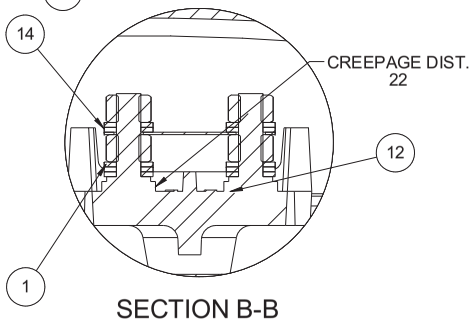

SECTION B-B

ITEM NO.	PART NUMBER	DESCRIPTION	QTY.
1	8923000021	M5 Washer	36
2	8353080028	T.Box Cover	1
3	8371080014	Gasket	1
4	8920000007	M5X0.8X10 Hex. Head Bolt	1
5	8371080013	88 Sq. Gasket	1
6	8923000020	M5 Shake proof washer	1
7	8351112100	T.Box base Machining	1
8	8926000003	M5X0.8X12 Cheese Hd Screw	2
9	8920000002	Captive Screw	4
10	8217080002	M25 Conduit Plug	2
11	8217080000	M16 Conduit Plug	1
12	5064080006	DMC Terminal Block	1
13	8572080002	Connecting link	3
14	8920000007	Hex Nut	12

DRAWING REVISION	REVISION BY	DATE
ECO	APPROVED BY	DATE
ECO DESCRIPTION		

COPYRIGHT REGAL BELOIT AMERICA, INC. ALL RIGHTS RESERVED.
PROPRIETARY AND CONFIDENTIAL INFORMATION - THIS DOCUMENT IS THE PROPERTY OF REGAL BELOIT AMERICA, INC. ("OWNER") AND CONTAINS OWNER'S PROPRIETARY INFORMATION. ANY PERSON, CORPORATION OR OTHER FIRM RECEIVING IT IS DEEMED, BY RECEIVING IT, TO AGREE THAT IT, AND/OR ANY PART OF IT, SHALL NOT BE DISCLOSED TO ANY PERSON, CORPORATION OR OTHER ENTITY, DUPLICATED, AND/OR USED, EXCEPT AS EXPRESSLY APPROVED IN WRITING IN ADVANCE BY OWNER. THIS DOCUMENT SHALL BE RETURNED TO OWNER UPON REQUEST. IT MAY BE SUBJECT TO CERTAIN RESTRICTIONS UNDER APPLICABLE EXPORT CONTROL LAWS AND REGULATIONS.

DRAWN BY	RAF
DATE	15/4/2014
APPROVED BY	SBD
DATE	15/4/2014
REFERENCE	
THIRD ANGLE PROJECTION	

marathon™ Motors

DESCRIPTION: TERMINAL BOX ASSY
112 FR

MATERIAL | PROCESS/FINISH

SIZE: B | DRAWING NUMBER: 5354112029 | SHEET: 1 OF 1

Uncontrolled Copy

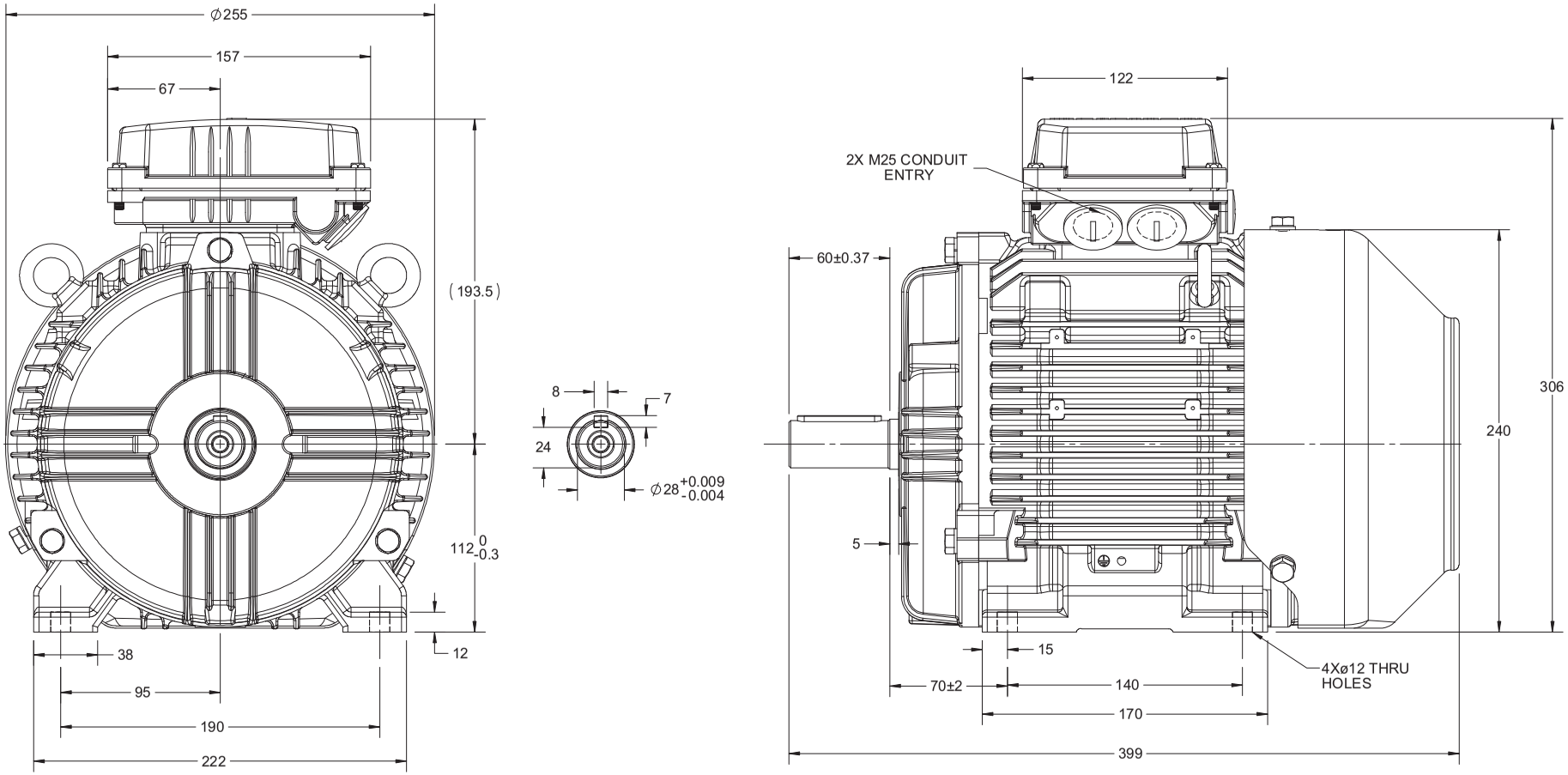

DRAWING REVISION D	REVISION BY S.MUDDA	DATE 29/06/2018		DRAWN BY SMAR	marathon Motors
ECO ECO-0147359	APPROVED BY JAY	DATE 29/06/2018		DATE 02/09/13	
ECO DESCRIPTION OUTLINE UPDATED AS PER NEW 3D STRUCTURING				APPROVED BY JAY	DESCRIPTION OUTLINE 112 FR.- B3 MTG. MOTOR TYPE: TCA/QCA
				DATE 02/09/13	
				REFERENCE	MATERIAL / PROCESS/FINISH
				THIRD ANGLE PROJECTION	SIZE B / DRAWING NUMBER 0211200262 / SHEET 1 OF 1

COPYRIGHT REGAL BELOIT AMERICA, INC. ALL RIGHTS RESERVED.
PROPRIETARY AND CONFIDENTIAL INFORMATION - THIS DOCUMENT IS THE PROPERTY OF REGAL BELOIT AMERICA, INC. ("OWNER") AND CONTAINS OWNER'S PROPRIETARY INFORMATION. ANY PERSON, CORPORATION OR OTHER FIRM RECEIVING IT IS DEEMED, BY RECEIVING IT, TO AGREE THAT IT, AND/OR ANY PART OF IT, SHALL NOT BE DISCLOSED TO ANY PERSON, CORPORATION OR OTHER ENTITY, DUPLICATED, AND/OR USED, EXCEPT AS EXPRESSLY APPROVED IN WRITING IN ADVANCE BY OWNER. THIS DOCUMENT SHALL BE RETURNED TO OWNER UPON REQUEST. IT MAY BE SUBJECT TO CERTAIN RESTRICTIONS UNDER APPLICABLE EXPORT CONTROL LAWS AND REGULATIONS.

LT MOTOR DATA SHEET		**BHEL BHADRADRI**
CLAUSE		
No.	PROJECT & PACKAGE:	IE-3 MOTORS
1	**GENERAL**	
i	Manufacturer & country of origin	MEML & INDIA
ii	Equipment driven by motor	FAN
iii	Motor type	SCIM
iv	Quantity	As per Project requirement
2	**DESIGN & PERFORMANCE DATA**	
i	Frame size	100L
ii	Type of duty	S1
iii	Type of enclosure & method of cooling / Degree of protection	TEFC / IC 411 / IP 55
iv	Applicable standard to which motor generally confirms	IS 12615, IEC 60034, IEC 60030, IS 12075, IS 12065 Etc.
v	Type of mounting	IMB3
vi	Direction of rotation viewed from DE	Bi-Directional
vii	Standard continuous rating at 40 deg.C ambient temp. as per Indian Std. (KW)	NA
viii	Derated rating for specified normal condition i.e. 50 deg. C ambient (KW)	1.5
ix	Rated voltage (volts) & Rated frequency(Hz)	415 / 50
x	Permissible variation of	
a	voltage (volts)	± 10%
b	Frequency (Hz)	± 5%
c	Combined voltage & frequency	10%
xi	Minimum permissible starting voltage(V)	85% OF RATED VOLTAGE
xii	Rated speed at rated voltage & frequency	965
xiii	At rated voltage and frequency	
a	Full load current (A)	3.33
b	No load current (A) (Approx.)	2.00
xiv	Power factor at	
a	100% load & 75% load & 50% load	0.76 / 0.67 / 0.52
b	No load (Approx.)	0.084
c	Starting (Approx.)	0.633
xv	Efficieny (%)at rated voltage & frequency	
a	100% load	82.5
b	75% load	82.5
c	50% load	79.2
xvi	Starting current % FLC at	
a	100% voltage	580%
b	85% voltage	493%
c	80% voltage	464%
xvii	Starting time with minimum permissible Voltage	
a	without driven equipment coupled	< 2 Secs.
b	with driven equipment coupled	4.8
xviii	Safe stall time with 110% of rated voltage	
a	From hot condition in sec.	12
b	From cold condition in sec.	25
xix	Torques - % FLT	
a	Starting torque at min. permissible V starting torq at rated V.	2.30
b	Pull up torque at rated voltage	2.67
c	Pull out torque	3.94
d	Min. accelerating torque available	2.30
e	Rated torque - kg-m	1.51
xx	Stator winding resistance per Ph. (Ω @ 20°C) (Indicative)	4.431
xxi	GD square value of motor - kg-m²	0.056
xxii	No. of permissible successive starts when motor is in hot / cold condition	2 / 3
xxiii		
a	Locked rotor KVA input (Inclusive of Tolerance)	16.7
b	Locked rotor KVA / KW (Inclusive of Tolerance)	11.1