FORMAT NO. : SG 07 3 04 R0

ALL DIMENSIONS ARE IN MM & WEIGHTS ARE IN kg PER UNIT
UNLESS OTHER WISE, SPECIFIED.

REFERENCE: - .....

ALL INFORMATION CONTAINED IN THIS DOCUMENT IS CONFIDENTIAL AND THE PROPERTY OF TOSHIBA TRANSMISSION & DISTRIBUTION SYSTEMS (INDIA) PRIVATE LIMITED. REPRODUCTION OF THIS IN ANY FORM IS TO BE DONE WITH THE SPECIFIC PERMISSION OF THE ORGANISATION.

COVER SHEET

REV	DETAILS OF MODIFICATION	REV. MARK	DATE		MODIFIED	CHECKED	APPROVED
01	AS MANUFACTURED	–	23.05.2024	SIGN	K.M	M.S	K.I
				NAME	K. MAHESH	M. SREEDHAR	K. IKEDA
01	AS MANUFACTURED	–	18.05.2024	SIGN	K.M	M.S	K.I
				NAME	K. MAHESH	M. SREEDHAR	K. IKEDA
00	FIRST ISSUE	–	29.01.2024	SIGN	K.M	M.S	K.I
				NAME	K. MAHESH	M. SREEDHAR	K. IKEDA

TOSHIBA

TOSHIBA TRANSMISSION & DISTRIBUTION SYSTEMS (INDIA) PRIVATE LIMITED

	NAME	SIGN	DATE
DESIGNED	SRIDEVI.Y		11.01.2024
DRAWN	K. MAHESH		01.02.2024
CHECKED	M.SREEDHAR		02.02.2024
APPROVED	K.IKEDA		02.02.2024
PRODUCT	245kV GIS		

SCALE: 1:1

SWITCHGEAR PRODUCTS DIVISION

TITLE: GA, INTERNAL ARRANGEMENT & SCHEMATICS OF LCP 220KV BUSCOUPLER & 220KV BUS PT (D04 & D05)

DRAWING NO. DEEUGBI69513004

SHEET NO: 01 OF 117 REV: 02

PROJECT 400/220kV GIS SUBSTION AT ERSAMA, ODISHA & 400kV AIS FEEDER BAY EXTENSION AT DUBURI, ODISHA

OWNER **ODISHA POWER TRANSMISSION CORPORATION LIMITED**

QBTGM BHARAT HEAVY ELECTRICALS LTD
TRANSMISSION BUSINESS GROUP NOIDA

DEPT CODE		NAME	SIGN	DATE
M	DRN			
	CHD			
	APPD			

TITLE GA, INTERNAL ARRANGEMENT & SCHEMATICS OF LCP FOR 220KV BUSCOUPLER & 220KV BUS PT (D04 & D05)

DEPT. SCALE DRAWING NO. TB-420-516-071-10A

SIGN

DATE

SHEET 01 OF 117 REV. 02

CHECKED — A.G.M (Elect) ENGG. & QUALITY OPTCL, BHUBANESWAR

APPROVED — Sr. G.M. (Elect) ENGG. & QUALITY OPTCL, BHUBANESWAR

REV	DETAILS OF MODIFICATION	DATE	REV.MARK		MODIFIED	CHECKED	APPROVED
02	AS PER CUST.COMMENT	23.05.2024	△	SIGN			
				NAME			
01	AS PER CUST.COMMENT	18.05.2024	△	SIGN			
				NAME			
00	FIRST ISSUE	06.02.2024	△	SIGN			
				NAME			

TOSHIBA

TRANSMISSION & DISTRIBUTION SYSTEMS (INDIA) PRIVATE LIMITED

SWITCHGEAR PRODUCTS DIVISION

CLIENT : ODISHA POWER TRANSMISSION CO.LTD.

PROJECT : 400/220kV GIS S.S AT ERSAMA, ODISHA & 400kV AIS FEEDER BAY EXTENSION AT DUBURI, ODISHA

CUSTOMER DRAWING NO. : TB-420-516-071-10A

PAGE DESCRIPTION : COVER SHEET

BAY NAME : GA, INTERNAL ARRANGEMENT & SCHEMATICS OF LCP FOR 220KV BUS COUPLER & 220KV BUS PT-(D04&D05)

DRAWING NO. : DEEUGBI69513004

APPROVED	K.IKEDA	K.I	02.02.2024
CHECKED	M.SREEDHAR	M.S	02.02.2024
DRAWN	K.MAHESH	K.M	01.02.2024
DESIGN	SRIDEVI.Y	S.Y	11.01.2024
	NAME	SIGN	DATE

SCALE : NTS

REV : 02

PAGE 1

117 PAGES

571089/2024/TBG-TB_ENGG_PA

FORMAT NO. : SG 07 3 04 R0

ALL DIMENSIONS ARE IN MM & WEIGHTS ARE IN kg PER UNIT UNLESS OTHER WISE, SPECIFIED.

REFERENCE: - .....

ALL INFORMATION CONTAINED IN THIS DOCUMENT IS CONFIDENTIAL AND THE PROPERTY OF TOSHIBA TRANSMISSION & DISTRIBUTION SYSTEMS (INDIA) PRIVATE LIMITED. REPRODUCTION OF THIS IN ANY FORM IS TO BE DONE WITH THE SPECIFIC PERMISSION OF THE ORGANISATION.

SHEET	DESIGNATION	REVISIONS		
1	COVER SHEET	00	01	02
2	SUMMARY:	00	01	02
3	GENERAL SPECIFICATION	00	01	02
4	ELECTRICAL SYMBOLS	00	01	02
5	SWITCH OPERATION SEQUENCES	00	01	02
6	SINGLE LINE DIAGRAM	00	01	02
7	GAS COMPARTMENT	00	01	02
8	INTERLOCKING LOGIC-1	00	01	02
9	INTERLOCKING LOGIC-2	00	01	02
10	INTERLOCKING LOGIC-3	00	01	02
11	INTERLOCKING LOGIC-4	00	01	02
12	INTERLOCKING LOGIC-5	00	01	02
13	INTERLOCKING LOGIC-6	00	01	02
14	MIMIC	00	01	02
15	OUTLINE OF LCP	00	01	02
16	INTERNAL ARRANGEMENT OF LCP	00	01	02
17	ANNUNCIATOR DESCRIPTION	00	01	02
18	CT CIRCUIT-1	00	01	02
19	CT CIRCUIT-2	00	01	02
20	CT CIRCUIT-3	00	01	02
21	VT-A CIRCUIT	00	01	02
22	VT-B CIRCUIT	00	01	02
23	VT-MCB CIRCUIT	00	01	02
24	DC CONTROL SOURCE	00	01	02
25	AC CONTROL SOURCE-1	00	01	02
26	MECHANISM'S HEATER CIRCUIT	00	01	02
27	MULTIPLE OPERATION PREVENTION CIRCUIT	00	01	02
28	GCB CLOSING AND ANTIPUMPING CIRCUIT	00	01	02
29	GCB PHASE DISCREPANCY CIRCUIT - 1	00	01	02
30	GCB PHASE DISCREPANCY CIRCUIT - 2	00	01	02
31	GCB TRIP-1 CIRCUIT	00	01	02
32	GCB TRIP-2 CIRCUIT	00	01	02
33	GCB MOTOR CIRCUIT	00	01	02
34	GCB MOTOR CONTROL CIRCUIT	00	01	02
35	GCB CONTROL CIRCUIT	00	01	02
36	GCB SPARE TERMINALS	00	01	02
37	GCB SPARE & INDICATION CIRCUIT	00	01	02
38	DS/ES CONTROL CIRCUIT (89A/89AE) - 1	00	01	02
39	DS/ES CONTROL CIRCUIT (89A/89AE) - 2	00	01	02
40	DS CONTROL CIRCUIT (89A)	00	01	02
41	ES CONTROL CIRCUIT (89AE)	00	01	02
42	DS/ES CONTROL CIRCUIT (89B/89BE) - 1	00	01	02
43	DS/ES CONTROL CIRCUIT (89B/89BE) -2	00	01	02
44	DS CONTROL CIRCUIT (89B)	00	01	02
45	ES CONTROL CIRCUIT (89BE)	00	01	02
46	ES CONTROL CIRCUIT (89AE1)-1	00	01	02
47	ES CONTROL CIRCUIT (89AE1)-2	00	01	02
48	ES CONTROL CIRCUIT (89BE1)-1	00	01	02
49	ES CONTROL CIRCUIT (89BE1)-2	00	01	02
50	DS/ES CONTROL CIRCUIT (89A2/89AE2)-1	00	01	02
51	DS/ES CONTROL CIRCUIT (89A2/89AE2)-2	00	01	02
52	DS CONTROL CIRCUIT (89A2)	00	01	02
53	ES CONTROL CIRCUIT (89AE2)	00	01	02
54	DS/ES CONTROL CIRCUIT (89B2/89BE2)-1	00	01	02
55	DS/ES CONTROL CIRCUIT (89B2/89BE2)-2	00	01	02
56	DS CONTROL CIRCUIT (89B2)	00	01	02
57	ES CONTROL CIRCUIT (89BE2)	00	01	02
58	CONTROL SIGNAL CIRCUIT-1	00	01	02
59	CONTROL SIGNAL CIRCUIT-2	00	01	02
60	CONTROL SIGNAL CIRCUIT-3	00	01	02
61	CONTROL SIGNAL CIRCUIT-4	00	01	02
62	INDICATOR CIRCUIT-1	00	01	02

SHEET	DESIGNATION	REVISIONS		
63	INDICATOR CIRCUIT-2	00	01	02
64	INDICATOR CIRCUIT-3	00	01	02
65	INTERLOCK CIRCUIT-1	00	01	02
66	INTERLOCK CIRCUIT-2	00	01	02
67	INTERLOCK CIRCUIT-3	00	01	02
68	INTERLOCK CIRCUIT-4	00	01	02
69	INTERLOCK CIRCUIT-5	00	01	02
70	INTERLOCK CIRCUIT-6	00	01	02
71	INTERLOCK CIRCUIT-7	00	01	02
72	INTERLOCK CIRCUIT-8	00	01	02
73	GAS PRESSURE SENSOR CIRCUIT-1	00	01	02
74	GAS PRESSURE SENSOR CIRCUIT-2	00	01	02
75	GAS PRESSURE SENSOR CIRCUIT-3	00	01	02
76	GAS PRESSURE SENSOR CIRCUIT-4	00	01	02
77	GAS PRESSURE SENSOR CIRCUIT-5	00	01	02
78	GAS MONITORING CIRCUIT-1	00	01	02
79	GAS MONITORING CIRCUIT-2	00	01	02
80	GAS MONITORING CIRCUIT-3	00	01	02
81	GAS MONITORING CIRCUIT-4	00	01	02
82	GAS MONITORING CIRCUIT-5	00	01	02
83	GAS MONITORING CIRCUIT-6	00	01	02
84	GAS MONITORING CIRCUIT-7	00	01	02
85	GAS MONITORING CIRCUIT-8	00	01	02
86	MB-A VT MONITORING CIRCUIT	00	01	02
87	MB-B VT MONITORING CIRCUIT	00	01	02
88	ANNUNCIATOR CIRCUIT-1	00	01	02
89	ANNUNCIATOR CIRCUIT-2	00	01	02
90	ANNUNCIATOR CIRCUIT-3	00	01	02
91	ANNUNCIATOR CIRCUIT- 4	00	01	02
92	ANNUNCIATOR CIRCUIT- 5	00	01	02
93	ANNUNCIATOR CIRCUIT- 6	00	01	02
94	ANNUNCIATOR CIRCUIT- 7	00	01	02
95	ANNUNCIATOR CIRCUIT- 8	00	01	02
96	ANNUNCIATOR CIRCUIT-9	00	01	02
97	ANNUNCIATOR CIRCUIT-10	00	01	02
98	ANNUNCIATOR CIRCUIT-11	00	01	02
99	ANNUNCIATOR CIRCUIT-12	00	01	02
100	SIGNAL INTERFACE-1	00	01	02
101	SIGNAL INTERFACE-2	00	01	02
102	SIGNAL INTERFACE-2	00	01	02
103	SIGNAL INTERFACE-3	00	01	02
104	PARTS LIST : MINILEC.MBAS 11_16WINDOWS, 220V DC - ABB.CA4-13M	00	01	02
105	PARTS LIST : ABB.AF09-30-10-13 - NOV.NSI22 W-S22 (ROUND) 220V DC	00	01	02
106	PARTS LIST : NOV.NSI22 W-S22 (ROUND) 220V DC - SIE.3RH2140-1BM40	00	01	02
107	PARTS LIST : SIE.3RH2140-1BM40 - OMR.MY4N-GS+PYF14A-N, 220V DC	00	01	02
108	PARTS LIST : OMR.PYC-A1 - OMR.MY4N-GS+PYF14A-N, 220V DC	00	01	02
109	PARTS LIST : OMR.PYC-A1 - PXC.HOUSING+BASE (32 PIN)PLASTIC	00	01	02
110	PARTS LIST : PXC.MALE + FEMALE INSERT 32PIN - TEK.2AS2-3PSR (4S1)	00	01	02
111	PARTS LIST : TEK.2AS2-3PSR (4S1) - CON.WELL.EP2.5/4UN	00	01	02
112	PARTS LIST : CON.WELL_GMH6 - CON.WELL.SP6/10U	00	01	02
113	PARTS LIST : CON.WELL.CA702 - CON.WELL_EPSTH4DT(END COVER)	00	01	02
114	CABLE OVERVIEW : =DEEUGBI69513004_SCHEMATICS+-WCTB1 - =DEEUGBI69513004_SCHEMATICS+-WG205-5R	00	01	02
115	CABLE OVERVIEW : =DEEUGBI69513004_SCHEMATICS+-WG205-6R - =DEEUGBI69513004_SCHEMATICS+-WGS205-6R	00	01	02
116	CABLE OVERVIEW : =DEEUGBI69513004_SCHEMATICS+-WGS205-7R - =DEEUGBI69513004_SCHEMATICS+-WVTR3	00	01	02
117	CABLE OVERVIEW : =DEEUGBI69513004_SCHEMATICS+-WVTR4 - =DEEUGBI69513004_SCHEMATICS+-WVTY4	00	01	02

CHECKED — A.G.M.(Elect), ENGG. & QUALITY, OPTCL, BHUBANESWAR

APPROVED — Sr. G.M. (Elect), ENGG. & QUALITY, OPTCL, BHUBANESWAR

REV	DETAILS OF MODIFICATION	DATE	REV.MARK	MODIFIED	CHECKED	APPROVED
02	AS PER CUST.COMMENT	23.05.2024	SIGN / NAME			
01	AS PER CUST.COMMENT	18.05.2024	SIGN / NAME			
00	FIRST ISSUE	06.02.2024	SIGN / NAME			

TOSHIBA
TRANSMISSION & DISTRIBUTION SYSTEMS (INDIA) PRIVATE LIMITED
SWITCHGEAR PRODUCTS DIVISION

CLIENT : ODISHA POWER TRANSMISSION CO.LTD.

PROJECT : 400/220kV GIS S.S AT ERSAMA, ODISHA & 400kV AIS FEEDER BAY EXTENSION AT DUBURI, ODISHA

CUSTOMER DRAWING NO. : TB-420-516-071-10A

PAGE DESCRIPTION : SUMMARY:

BAY NAME : GA, INTERNAL ARRANGEMENT & SCHEMATICS OF LCP FOR 220KV BUS COUPLER & 220KV BUS PT-(D04&D05)

DRAWING NO. : DEEUGBI69513004

	NAME	SIGN	DATE
APPROVED	K.IKEDA	K.I	02.02.2024
CHECKED	M.SREEDHAR	M.S	02.02.2024
DRAWN	K.MAHESH	K.M	01.02.2024
DESIGN	SRIDEVI.Y	S.Y	11.01.2024

SCALE : NTS

REV : 02

PAGE 2 / 117 PAGES

1. INTERNAL WIRE SIZE & COLORING

S.NO.	KIND OF CIRCUIT	WIRE TYPE	WIRE SIZE (MIN)	COLORING
1	GCB MOTOR & CONTROL CKT	PVC INSULATED FRLS	2.5 SQ.MM	GREY
2	DS/ES MOTOR CKT	PVC INSULATED FRLS	2.5 SQ.MM	
3	ANNUNCIATOR	PVC INSULATED FRLS	2.5 SQ.MM	
4	DC CONTROL CIRCUITS	PVC INSULATED FRLS	2.5 SQ.MM	
5	POWER SUPPLY CKT	PVC INSULATED FRLS	2.5 SQ.MM	
6	AC CONTROL CIRCUITS	PVC INSULATED FRLS	2.5 SQ.MM	BLACK
7	CT SECONDARY	PVC INSULATED FRLS	4 SQ.MM	RED,YELLOW,BLUE FOR PHASES BLACK FOR NEUTRAL
8	VT SECONDARY	PVC INSULATED FRLS	4 SQ.MM	
9	GROUND(EARTH)	PVC INSULATED FRLS	4.0 SQ.MM	GREEN/YELLOW

2. WIRING SYSTEM

DUCT SYSTEM

3. RED FERRULE WITH WHITE TEXT FOR TRIP CIRCUIT

4. INTERNAL WIRE CROSS REFERENCE FERRULING METHOD

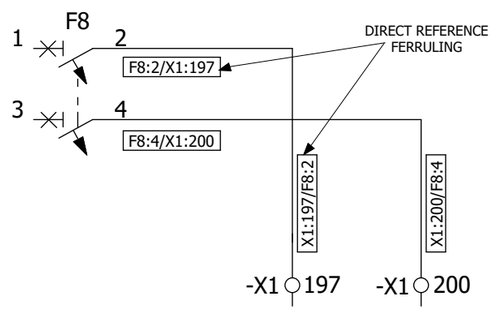

5. IDENTIFICATION OF THE VOLTAGES

INDICATION	DESCRIPTION	RATING
P/N	POSITIVE/NEGATIVE POLE	220V DC
PH /NH	AC VOLTAGE PHASE	230V AC
PT1/NT1	CIRCUIT BREAKER TRIP CIRCUIT -1	220V DC
PT2/NT2	CIRCUIT BREAKER TRIP CIRCUIT -2	220V DC
PC1/NC1	CIRCUIT BREAKER CONTROL CIRCUIT	220V DC
PM0/NM0	CIRCUIT BREAKER MOTOR CIRCUIT	220V DC
PM1/NM1	DS/ES/HES MOTOR CIRCUIT	220V DC
PC2/NC2	DS/ES/HES STATUS MOINITORING & INTERLOCKING CIRCUIT	220V DC
PA1/NA1	INDICATION, GAS MONITORING & ANNUNCIATION CIRCUIT	220V DC
PPS/NPS	GAS PRESSURE SENSOR MONITORING CIRCUIT	220V DC

6. DETAIL OF WIRING

(1) INSULATED RING TYPE COMPRESSED TERMINAL CABLE/WIRE LUG(CT, VT, EARTHING)

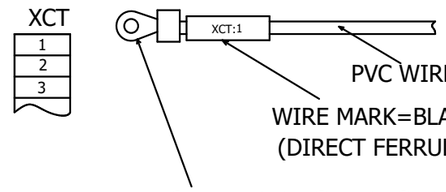

(2) INSULATED PIN TYPE COMPRESSED TERMINAL CABLE/WIRE LUG (CONTACTOR, MCB,TERMINAL BLOCKS & ANNUNCIATOR)

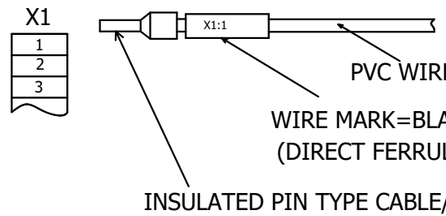

(3)INSULATED FASTON TYPE COMPRESSED TERMINALCABLE/WIRE LUG (AUXILIARY RELAY BOX ETC. WIRING)

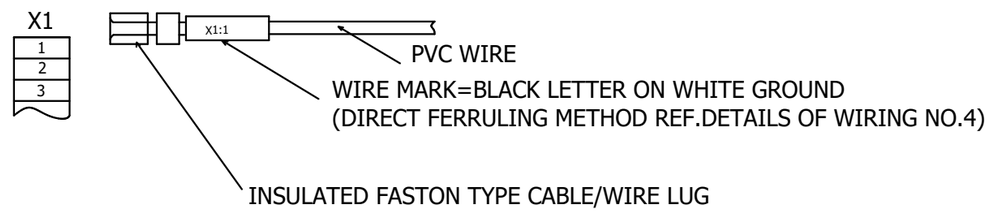

(4)INSULATED FORK TYPE TERMINAL CABLE/WIRE LUG (OMRON RELAY WIRING)

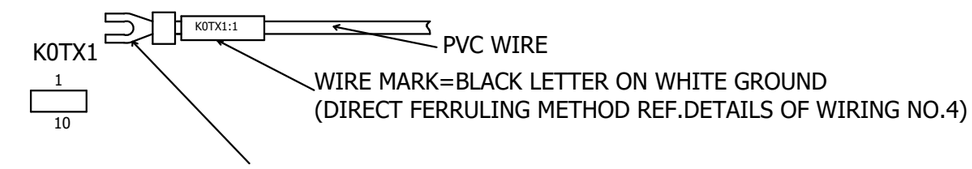

(5) INSERTION OF WIRE MARK (EX. COMPRESSED TERMINAL)

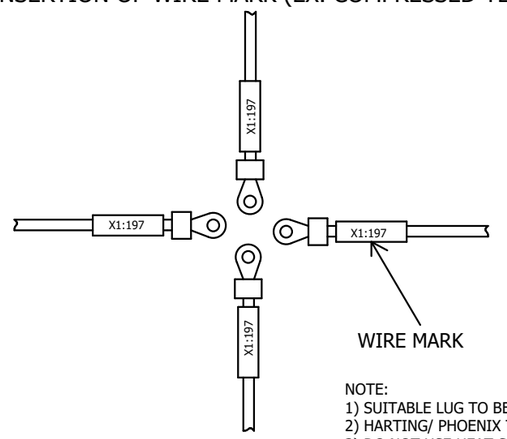

NOTE:
1) SUITABLE LUG TO BE USED FOR OTHER COMPONENTS LIKE BCU, PM, AUXILIARY RELAY BOX, ETC..,
2) HARTING/ PHOENIX TO BE PROVIDED SINGLE ENTRY OF CABLE.
3) DO NOT USE HEAT SHRINKABLE LUGS

CHECKED — A.G.M (Elect) ENGG. & QUALITY OPTCL, BHUBANESWAR
APPROVED — Sr. G.M. (Elect) ENGG. & QUALITY OPTCL, BHUBANESWAR

FORMAT NO. : SG 07 3 04 R0
ALL DIMENSIONS ARE IN MM & WEIGHTS ARE IN kg PER UNIT UNLESS OTHER WISE, SPECIFIED.
REFERENCE: - .....
ALL INFORMATION CONTAINED IN THIS DOCUMENT IS CONFIDENTIAL AND THE PROPERTY OF TOSHIBA TRANSMISSION & DISTRIBUTION SYSTEMS (INDIA) PRIVATE LIMITED. REPRODUCTION OF THIS IN ANY FORM IS TO BE DONE WITH THE SPECIFIC PERMISSION OF THE ORGANISATION.

REV	DETAILS OF MODIFICATION	DATE	REV.MARK	MODIFIED	CHECKED	APPROVED
02	AS PER CUST.COMMENT	23.05.2024	SIGN / NAME			
01	AS PER CUST.COMMENT	18.05.2024	SIGN / NAME			
00	FIRST ISSUE	06.02.2024	SIGN / NAME			

TOSHIBA
TRANSMISSION & DISTRIBUTION SYSTEMS (INDIA) PRIVATE LIMITED
SWITCHGEAR PRODUCTS DIVISION

CLIENT : ODISHA POWER TRANSMISSION CO.LTD.
PROJECT : 400/220kV GIS S.S AT ERSAMA, ODISHA & 400kV AIS FEEDER BAY EXTENSION AT DUBURI, ODISHA
CUSTOMER DRAWING NO. : TB-420-516-071-10A

PAGE DESCRIPTION : GENERAL SPECIFICATION

BAY NAME : GA, INTERNAL ARRANGEMENT & SCHEMATICS OF LCP FOR 220KV BUS COUPLER & 220KV BUS PT-(D04&D05)
DRAWING NO. : DEEUGBI69513004

	NAME	SIGN	DATE
APPROVED	K.IKEDA	K.I	02.02.2024
CHECKED	M.SREEDHAR	M.S	02.02.2024
DRAWN	K.MAHESH	K.M	01.02.2024
DESIGN	SRIDEVI.Y	S.Y	11.01.2024

SCALE : NTS
REV : 02
PAGE 3 / 117 PAGES

FORMAT NO. : SG 07 3 04 R0

ALL DIMENSIONS ARE IN MM & WEIGHTS ARE IN kg PER UNIT
UNLESS OTHER WISE, SPECIFIED.

REFERENCE: - .....

ALL INFORMATION CONTAINED IN THIS DOCUMENT IS CONFIDENTIAL AND THE PROPERTY OF TOSHIBA TRANSMISSION & DISTRIBUTION SYSTEMS (INDIA) PRIVATE LIMITED. REPRODUCTION OF THIS IN ANY FORM IS TO BE DONE WITH THE SPECIFIC PERMISSION OF THE ORGANISATION.

SYMBOL	DESCRIPTION	SYMBOL	DESCRIPTION	SYMBOL	DESCRIPTION
	MAKE CONTACT		THERMAL OVERLOAD RELAY		CIRCUIT BREAKER
	BREAK CONTACT		HEATER		DISCONNECTOR SWITCH
	CHANGE -OVER CONTACT		VOLTAGE TRANSFORMER		CURRENT TRANSFORMER
	MINIATURE CIRCUIT BREAKER, SINGLE POLE		SWITCH, NO CONTACT, OPERATED BY TURNING SWITCH, NC CONTACT, OPERATED BY TURNING		FLUORESCENT LAMP
	THERMOSTAT & HUMIDISTAT		PUSHBUTTON, NO CONTACT, OPERATED BY PUSHING PUSHBUTTON, NC CONTACT, OPERATED BY PUSHING		DISCONNECT TERMINAL BLOCK
	LAMP, INDICATOR LIGHT		PUSHBUTTON, NO CONTACT, OPERATED BY TURNING PUSHBUTTON, NC CONTACT, OPERATED BY TURNING		RETURN ARROW
	RESISTER		DIODE		NC CONTACT, DOOR SWITCH
	RECEPTACLE WITH PE, THREE POLE		POWER NO CONTACT OF A CONTACTOR		SWITCH, NO CONTACT, OPERATED BY TURNING , 3 SW.POSITION SWITCH, NC CONTACT, OPERATED BY TURNING , 3 SW.POSITION
	RECEPTACLE WITH PE, THREE POLE & SWITCH		NO CONTACT LEADING NC CONTACT LATE BREAK		SWITCH, NO CONTACT, OPERATED BY TURNING , 4 SW.POSITION SWITCH, NC CONTACT, OPERATED BY TURNING , 4 SW.POSITION
	TERMINAL BLOCK		SWITCH, CHANGE -OVER CONTACT, OPERATED BY TURNING		SWITCH, NO CONTACT, OPERATED BY TURNING , 2 SW.POSITION SWITCH, NC CONTACT, OPERATED BY TURNING , 2 SW.POSITION
	RELAY / CONTACTOR	A	AMMETER		OFF DELAY TIMER
	TIMER (ON DELAY TIMER)	V	VOLTMETER		CONDENSER
	SWITCH, NO CONTACT, OPERATED BY PUSHING SWITCH, NC CONTACT, OPERATED BY PUSHING	W	WATTMETER	SET RESET	LATCHING RELAY
	FEMALE/MALE PIN WITH PLUG		BCU - CHANNEL		DISCREPANCY LAMP
	NO CONTACT, WITH DELAYED CLOSING NC CONTACT, WITH DELAYED OPENING		CHANGE -OVER CONTACT, WITH DROP OUT DELAY		
	DIODE TERMINAL BLOCK		CHANGE -OVER CONTACT, WITH PICK-UP DELAY	OPEN CLOSED	DISCONNECTOR / EARTHING
	LIMIT SWITCH, NO CONTACT LIMIT SWITCH, NC CONTACT		LIGHT -EMITTING DIODE (LED), GENERAL		POSITION INDICATION LIGHT CROSS WITH LED
	HORN		EARTHING	OPEN CLOSED	CIRCUIT BREAKER POSITION INDICATION LIGHT CROSS WITH LED
M	DC MOTOR	M	AC MOTOR		

BHEL Transmission Business Group Industry Sector Noida-01
(ANIL KUMAR)
MANAGER/BHEL-TBG

CHECKED
A.G.M (Elect)
ENGG. & QUALITY
OPTCL, BHUBANESWAR

APPROVED
Sr. G.M. (Elect)
ENGG. & QUALITY
OPTCL, BHUBANESWAR

REV	DETAILS OF MODIFICATION	DATE	REV.MARK	MODIFIED	CHECKED	APPROVED
02	AS PER CUST.COMMENT	23.05.2024	SIGN / NAME			
01	AS PER CUST.COMMENT	18.05.2024	SIGN / NAME			
00	FIRST ISSUE	06.02.2024	SIGN / NAME			

TOSHIBA
TRANSMISSION & DISTRIBUTION SYSTEMS (INDIA) PRIVATE LIMITED
SWITCHGEAR PRODUCTS DIVISION

CLIENT : ODISHA POWER TRANSMISSION CO.LTD.
PROJECT : 400/220kV GIS S.S AT ERSAMA, ODISHA & 400kV AIS FEEDER BAY EXTENSION AT DUBURI, ODISHA
CUSTOMER DRAWING NO. : TB-420-516-071-10A

PAGE DESCRIPTION : ELECTRICAL SYMBOLS

BAY NAME : GA, INTERNAL ARRANGEMENT & SCHEMATICS OF LCP FOR 220KV BUS COUPLER & 220KV BUS PT-(D04&D05)
DRAWING NO. : DEEUGBI69513004

APPROVED	K.IKEDA	K.I	02.02.2024
CHECKED	M.SREEDHAR	M.S	02.02.2024
DRAWN	K.MAHESH	K.M	01.02.2024
DESIGN	SRIDEVI.Y	S.Y	11.01.2024
	NAME	SIGN	DATE

SCALE : NTS
REV : 02
PAGE 4 117 PAGES

FORMAT NO. : SG 07 3 04 R0

ALL DIMENSIONS ARE IN MM & WEIGHTS ARE IN kg PER UNIT
UNLESS OTHER WISE, SPECIFIED.

REFERENCE: - .....

ALL INFORMATION CONTAINED IN THIS DOCUMENT IS CONFIDENTIAL AND THE PROPERTY OF TOSHIBA TRANSMISSION & DISTRIBUTION SYSTEMS (INDIA) PRIVATE LIMITED. REPRODUCTION OF THIS IN ANY FORM IS TO BE DONE WITH THE SPECIFIC PERMISSION OF THE ORGANISATION.

SWITCHES

SHUTTER SWITCH - SS

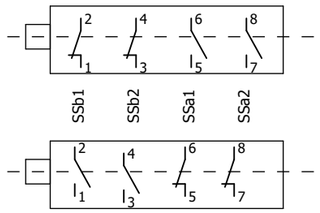

3 POSITION MOMENTARY SWITCH

3 POSITION MOMENTARY SW. FOR H.V
APPARATUS SELECTION SPRING RETURN TO "0" POSITION

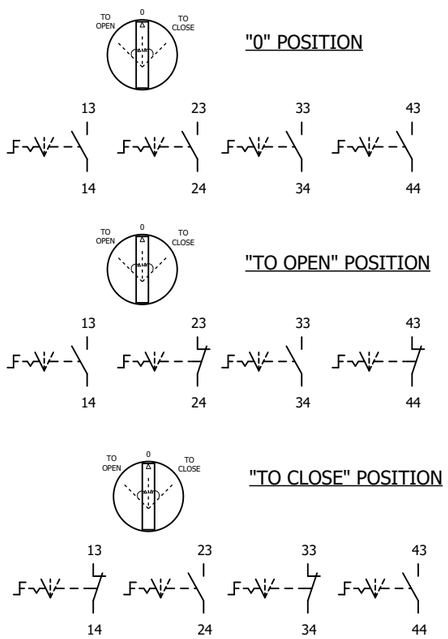

EXPLANATION OF CONTACTS TABLE

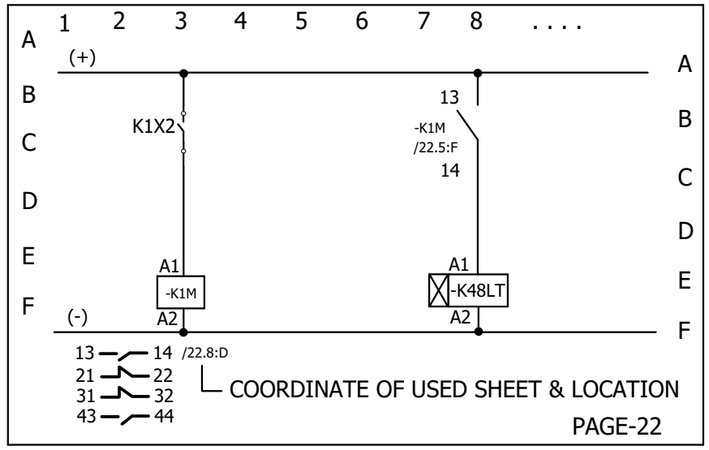

LETTER CODE OF THE DIFFERENT ITEMS

INDICATION	DESCRIPTION
A	ANNUNCIATOR
B	BCU/THERMOSTAT/HUMIDISTAT
E	HEATER/CUBICLE LIGHT/EMER.PUSH BUTTON/RECEP
F	PROTECTIVE DEVICES
K	RELAYS, CONTACTORS & TIMERS
P	POWER METER
S	SWITCHES
T	TRANSFORMERS
W	CONTROL CABLES
X	TERMINALS & PLUGS
Q	HIGH VOLTAGE DEVICES
H	INDICATOR

EXPLANATION OF TERMINAL DIAGRAM

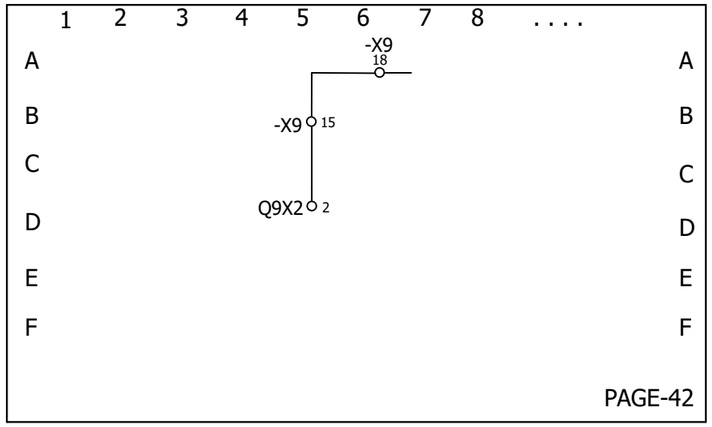

(FROM)
INTERNAL
TARGET

X9 15

EXTERNAL
TARGET
(TO)

INTERNAL TARGET		X9	EXTERNAL TARGET	
X9-18	42.6:A	15	Q9X1-2	42.5.A

BHEL Transmission Business Group
Industry Sector
Noida-01

(ANUILEEM KUMAR)
MANAGER/ELHEL-TDS

CHECKED
A.G.M (Elect)
ENGG. & QUALITY
OPTCL, BHUBANESWAR

APPROVED
Sr. G.M. (Elect)
ENGG. & QUALITY
OPTCL, BHUBANESWAR

REV	DETAILS OF MODIFICATION	DATE	REV.MARK		MODIFIED	CHECKED	APPROVED
02	AS PER CUST.COMMENT	23.05.2024	△	SIGN			
				NAME			
01	AS PER CUST.COMMENT	18.05.2024	△	SIGN			
				NAME			
00	FIRST ISSUE	06.02.2024	△	SIGN			
				NAME			

TOSHIBA
TRANSMISSION & DISTRIBUTION SYSTEMS (INDIA) PRIVATE LIMITED
SWITCHGEAR PRODUCTS DIVISION

CLIENT : ODISHA POWER TRANSMISSION CO.LTD.
PROJECT : 400/220kV GIS S.S AT ERSAMA, ODISHA & 400kV AIS FEEDER BAY EXTENSION AT DUBURI, ODISHA
CUSTOMER DRAWING NO. : TB-420-516-071-10A

PAGE DESCRIPTION : SWITCH OPERATION SEQUENCES

BAY NAME : GA, INTERNAL ARRANGEMENT & SCHEMATICS OF LCP FOR 220KV BUS COUPLER & 220KV BUS PT-(D04&D05)
DRAWING NO. : DEEUGBI69513004

	NAME	SIGN	DATE
APPROVED	K.IKEDA	K.I	02.02.2024
CHECKED	M.SREEDHAR	M.S	02.02.2024
DRAWN	K.MAHESH	K.M	01.02.2024
DESIGN	SRIDEVI.Y	S.Y	11.01.2024

SCALE : NTS
REV : 02
PAGE 5
117 PAGES

FORMAT NO. : SG 07 3 04 R0

ALL DIMENSIONS ARE IN MM & WEIGHTS ARE IN kg PER UNIT
UNLESS OTHER WISE, SPECIFIED.

REFERENCE: - .....

ALL INFORMATION CONTAINED IN THIS DOCUMENT IS CONFIDENTIAL AND THE PROPERTY OF TOSHIBA TRANSMISSION & DISTRIBUTION SYSTEMS (INDIA) PRIVATE LIMITED. REPRODUCTION OF THIS IN ANY FORM IS TO BE DONE WITH THE SPECIFIC PERMISSION OF THE ORGANISATION.

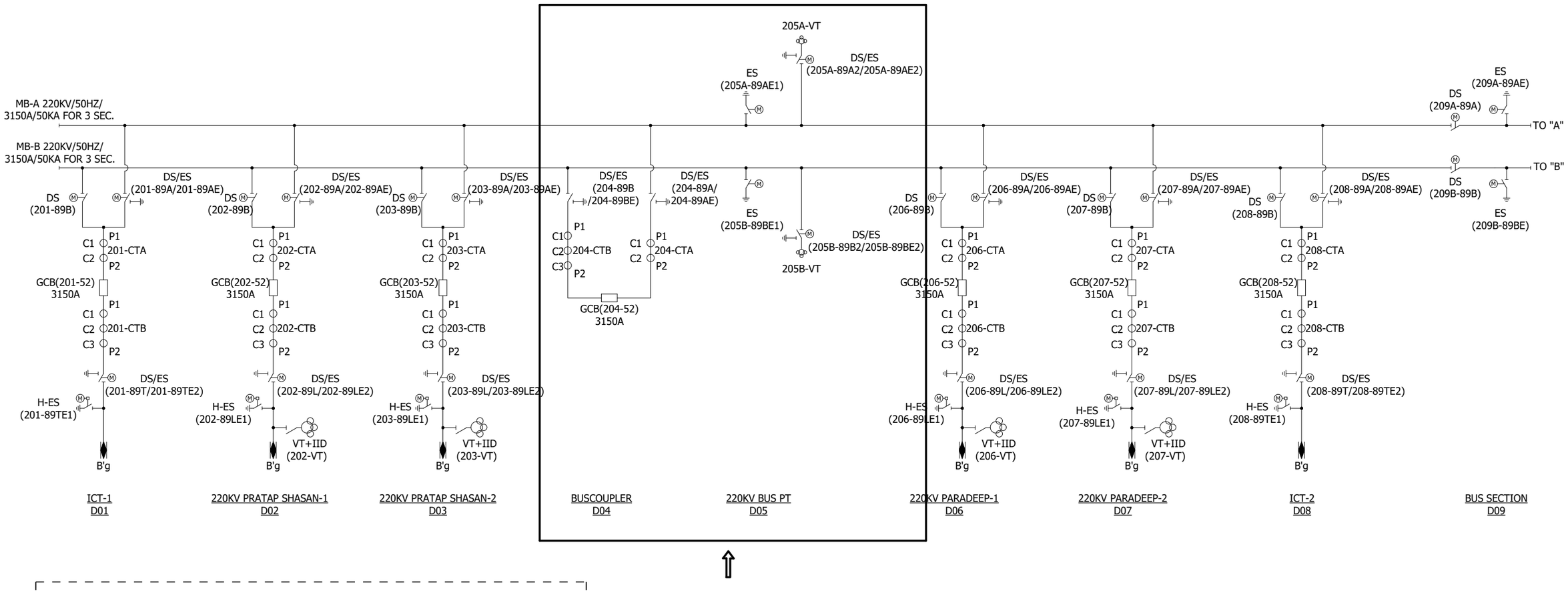

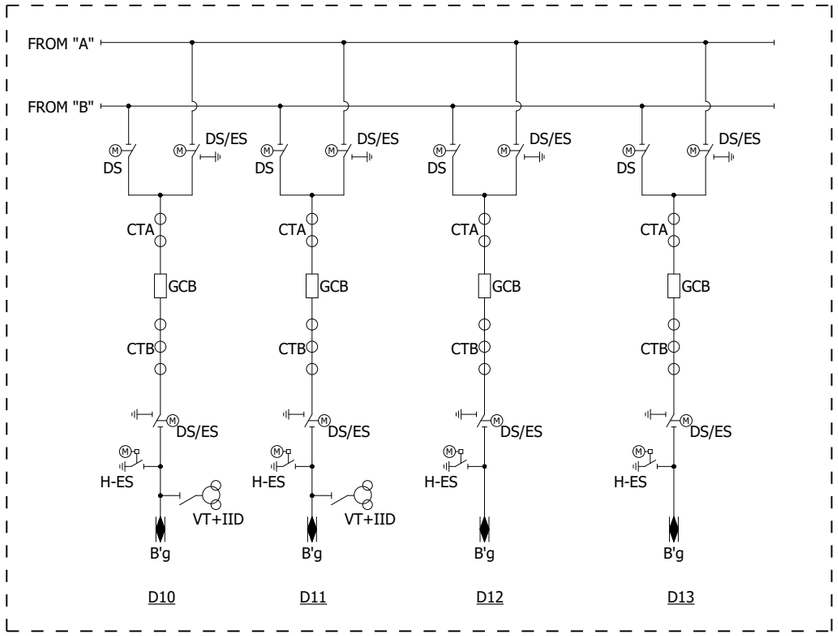

CHECKED
A.G.M (Elect)
ENGG. & QUALITY
OPTCL, BHUBANESWAR

APPROVED
Sr. G.M. (Elect)
ENGG. & QUALITY
OPTCL, BHUBANESWAR

REV	DETAILS OF MODIFICATION	DATE	REV.MARK		MODIFIED	CHECKED	APPROVED
02	AS PER CUST.COMMENT	23.05.2024		SIGN			
				NAME			
01	AS PER CUST.COMMENT	18.05.2024		SIGN			
				NAME			
00	FIRST ISSUE	06.02.2024		SIGN			
				NAME			

TOSHIBA
TRANSMISSION & DISTRIBUTION SYSTEMS (INDIA) PRIVATE LIMITED
SWITCHGEAR PRODUCTS DIVISION

CLIENT : ODISHA POWER TRANSMISSION CO.LTD.
PROJECT : 400/220kV GIS S.S AT ERSAMA, ODISHA & 400kV AIS FEEDER BAY EXTENSION AT DUBURI, ODISHA
CUSTOMER DRAWING NO. : TB-420-516-071-10A

PAGE DESCRIPTION : SINGLE LINE DIAGRAM

BAY NAME : GA, INTERNAL ARRANGEMENT & SCHEMATICS OF LCP FOR 220KV BUS COUPLER & 220KV BUS PT-(D04&D05)
DRAWING NO. : DEEUGBI69513004

APPROVED	K.IKEDA	K.I	02.02.2024
CHECKED	M.SREEDHAR	M.S	02.02.2024
DRAWN	K.MAHESH	K.M	01.02.2024
DESIGN	SRIDEVI.Y	S.Y	11.01.2024
	NAME	SIGN	DATE

SCALE : NTS
REV : 02
PAGE 6
117 PAGES

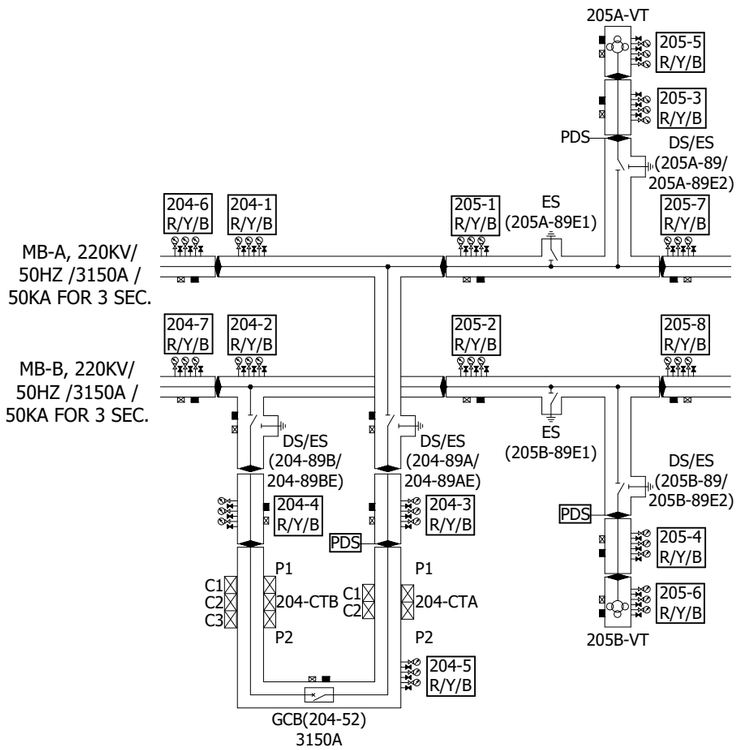

BUSCOUPLER (D04)

220KV BUS PT (D05)

HIGH VOLTAGE DEVICES

TOSHIBA'S NAME	DESIGNATION
GCB (52)	GAS CIRCUIT BREAKER
DS(89A)	MB-A SIDE DISCONNECTOR SWITCH
DS(89B)	MB-B SIDE DISCONNECTOR SWITCH
ES(89AE)	MB-A SIDE EARTHING SWITCH
ES(89BE)	MB-B SIDE EARTHING SWITCH
ES(89AE1)	MB-A SIDE BUS EARTHING SWITCH
ES(89BE1)	MB-B SIDE BUS EARTHING SWITCH
DS(89A2)	MB-A SIDE BUS PT DISCONNECTOR SWITCH
DS(89B2)	MB-B SIDE BUS PT DISCONNECTOR SWITCH
ES(89AE2)	MB-A SIDE BUS PT EARTHING SWITCH
ES(89BE2)	MB-A SIDE BUS PT EARTHING SWITCH
CT	CURRENT TRANSFORMER
204-1R/Y/B	MB-A GAS COMPARTMENT
204-2R/Y/B	MB-B GAS COMPARTMENT
204-3R/Y/B	BUFFER GAS COMPARTMENT
204-4R/Y/B	BUFFER GAS COMPARTMENT
204-5R/Y/B	CIRCUIT BREAKER GAS COMPARTMENT
205-1R/Y/B	MB-A SIDE DS/ES GAS COMPARTMENT
205-2R/Y/B	MB-B SIDE DS/ES GAS COMPARTMENT
205-3R/Y/B	MB-A SIDE VT BUFFER GAS COMPARTMENT
205-4R/Y/B	MB-B SIDE VT BUFFER GAS COMPARTMENT
205-5R/Y/B	MB-A VT GAS COMPARTMENT
205-6R/Y/B	MB-B VT GAS COMPARTMENT
205-7R/Y/B	MB-A RIGHT SIDE GAS COMPARTMENT
205-8R/Y/B	MB-B RIGHT SIDE GAS COMPARTMENT

LEGEND:

SYMBOL/ ABBREVIATION	EQUIPMENT NAME	OPERATION METHOD
GCB	GAS INSULATED CIRCUIT BREAKER	MOTOR CHARGED SPRING OPERATION
DS/ES	DISCONNECTOR WITH EARTHING SWITCH	MOTOR OPERATION
DS	DISCONNECTOR	MOTOR OPERATION
ES	EARTHING SWITCH	MOTOR OPERATION
H-ES	HIGH SPEED EARTHING SWITCH	MOTOR CHARGED SPRING OPERATION
CT	CURRENT TRANSFORMER	
VT+IID	VOLTAGE TRANSFORMER WITH INTEGRATED ISOLATING DEVICE (MANUAL OPERATION)	
VT	VOLTAGE TRANSFORMER	
	DN-8 VALVE FOR GAS DENSITY MONITOR	
	DN-20 VALVE FOR GAS HANDLING	
	GAS TIGHT SPACER	
	RUPTURE DISC	
	ADSORBENT	
MB-A&B	MAIN BUS-A&B	
PDS	PARTIAL DISCHARGE SENSOR	

SETTING VALUE OF GAS MONITOR:

COMPONENT	SETTING VALUE OF PRESSURE SWITCH	RATED PRESSURE (abs)
GCB	FIRST LOW PRESSURE ALARM : 6.70 bar. abs at 20°C SECOND LOW PRESSURE ALARM: 6.40 bar. abs at 20°C (BLOCKING PRESSURE) GUARANTEE LIWL: 1050kVp	7.0 bar at 20°C
OTHERS	FIRST LOW PRESSURE ALARM : 6.70 bar. abs at 20°C SECOND LOW PRESSURE ALARM: 6.40 bar. abs at 20°C GUARANTEE LIWL: 1050kVp	7.0 bar at 20°C

BHEL Transmission Business Group Industry Sector Noida-01

(ANILESH KUMAR) MANAGER/BHEL-TBG

CHECKED
A.G.M (Elect)
ENGG. & QUALITY
OPTCL, BHUBANESWAR

APPROVED
Sr. G.M. (Elect)
ENGG. & QUALITY
OPTCL, BHUBANESWAR

FORMAT NO. : SG 07 3 04 R0

ALL DIMENSIONS ARE IN MM & WEIGHTS ARE IN kg PER UNIT UNLESS OTHER WISE, SPECIFIED.

REFERENCE: - .....

ALL INFORMATION CONTAINED IN THIS DOCUMENT IS CONFIDENTIAL AND THE PROPERTY OF TOSHIBA TRANSMISSION & DISTRIBUTION SYSTEMS (INDIA) PRIVATE LIMITED. REPRODUCTION OF THIS IN ANY FORM IS TO BE DONE WITH THE SPECIFIC PERMISSION OF THE ORGANISATION.

REV	DETAILS OF MODIFICATION	DATE	REV.MARK		MODIFIED	CHECKED	APPROVED
02	AS PER CUST.COMMENT	23.05.2024	△	SIGN / NAME			
01	AS PER CUST.COMMENT	18.05.2024	△	SIGN / NAME			
00	FIRST ISSUE	06.02.2024	△	SIGN / NAME			

TOSHIBA
TRANSMISSION & DISTRIBUTION SYSTEMS (INDIA) PRIVATE LIMITED
SWITCHGEAR PRODUCTS DIVISION

CLIENT : ODISHA POWER TRANSMISSION CO.LTD.
PROJECT : 400/220kV GIS S.S AT ERSAMA, ODISHA & 400kV AIS FEEDER BAY EXTENSION AT DUBURI, ODISHA
CUSTOMER DRAWING NO. : TB-420-516-071-10A

PAGE DESCRIPTION : GAS COMPARTMENT

BAY NAME : GA, INTERNAL ARRANGEMENT & SCHEMATICS OF LCP FOR 220KV BUS COUPLER & 220KV BUS PT-(D04&D05)
DRAWING NO. : DEEUGBI69513004

APPROVED	K.IKEDA	K.I	02.02.2024
CHECKED	M.SREEDHAR	M.S	02.02.2024
DRAWN	K.MAHESH	K.M	01.02.2024
DESIGN	SRIDEVI.Y	S.Y	11.01.2024
	NAME	SIGN	DATE

SCALE : NTS
REV : 02
PAGE 7
117 PAGES

FORMAT NO. : SG 07 3 04 R0

ALL DIMENSIONS ARE IN MM & WEIGHTS ARE IN kg PER UNIT UNLESS OTHER WISE, SPECIFIED.

REFERENCE: - .....

ALL INFORMATION CONTAINED IN THIS DOCUMENT IS CONFIDENTIAL AND THE PROPERTY OF TOSHIBA TRANSMISSION & DISTRIBUTION SYSTEMS (INDIA) PRIVATE LIMITED. REPRODUCTION OF THIS IN ANY FORM IS TO BE DONE WITH THE SPECIFIC PERMISSION OF THE ORGANISATION.

GCB (52) INTERLOCKING LOGIC

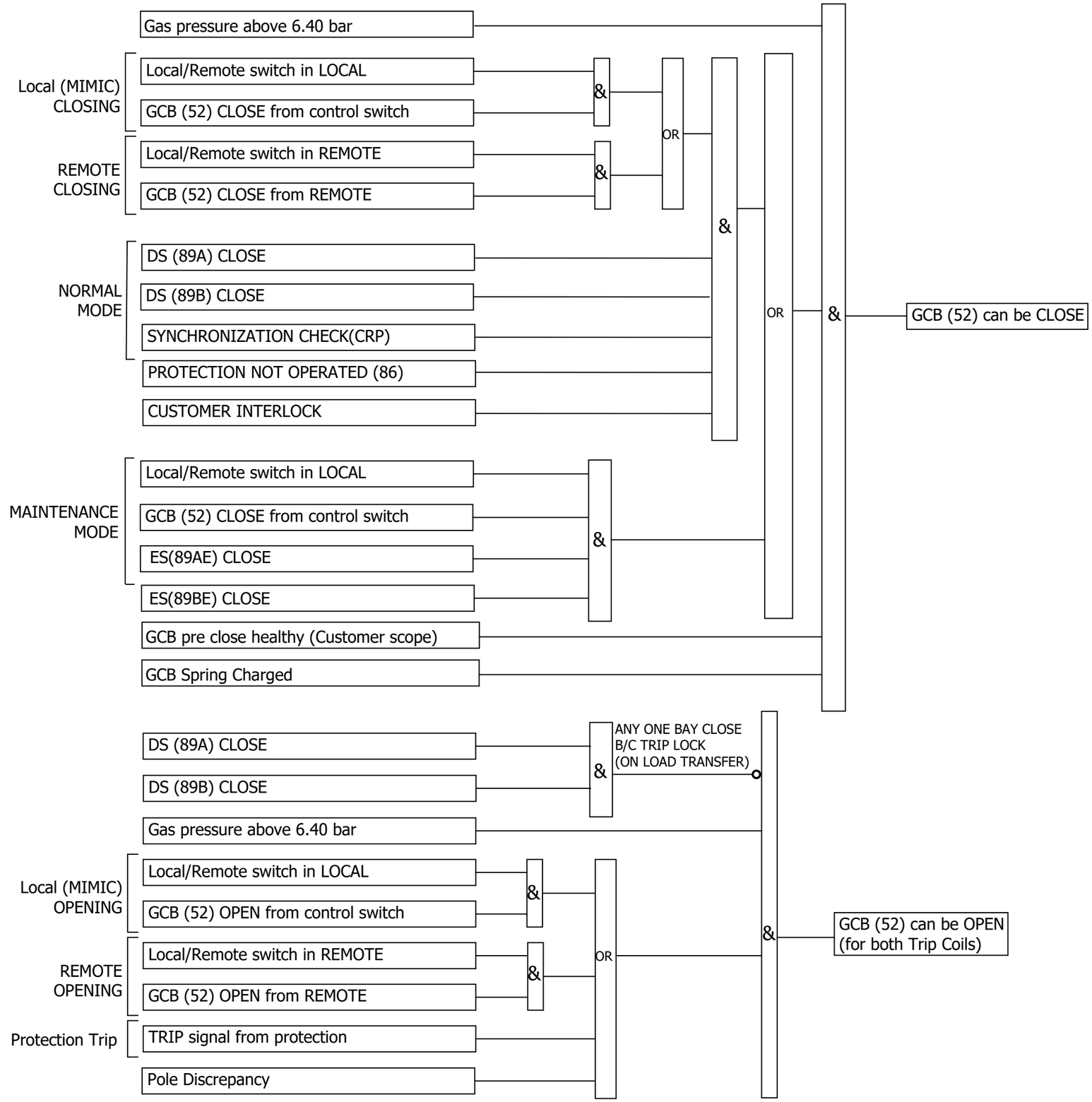

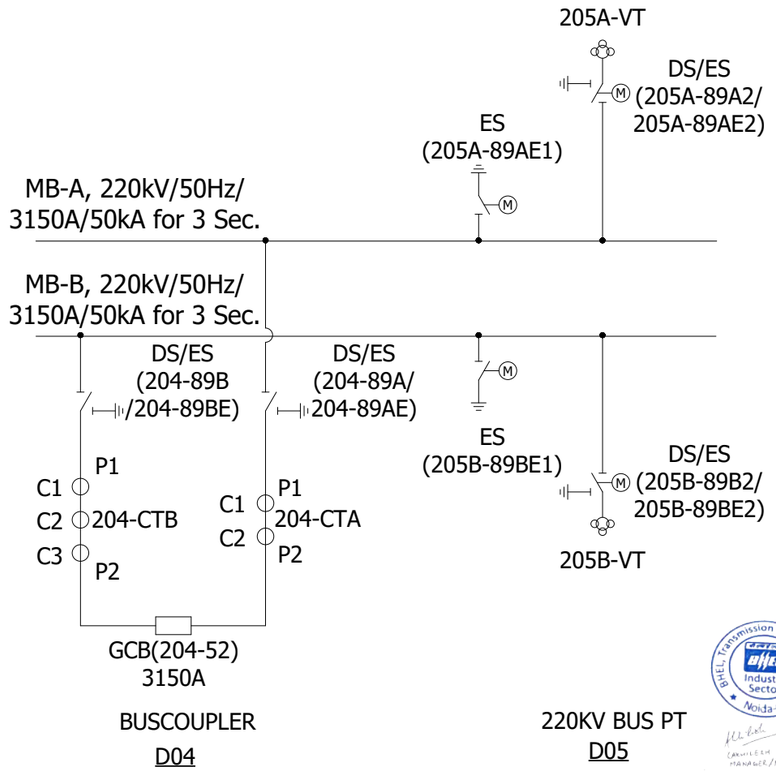

CHECKED
A.G.M (Elect)
ENGG. & QUALITY
OPTCL, BHUBANESWAR

APPROVED
Sr. G.M. (Elect)
ENGG. & QUALITY
OPTCL, BHUBANESWAR

REV	DETAILS OF MODIFICATION	DATE	REV.MARK		MODIFIED	CHECKED	APPROVED
02	AS PER CUST.COMMENT	23.05.2024	△	SIGN / NAME			
01	AS PER CUST.COMMENT	18.05.2024	△	SIGN / NAME			
00	FIRST ISSUE	06.02.2024	△	SIGN / NAME			

TOSHIBA
TRANSMISSION & DISTRIBUTION SYSTEMS (INDIA) PRIVATE LIMITED
SWITCHGEAR PRODUCTS DIVISION

CLIENT : ODISHA POWER TRANSMISSION CO.LTD.
PROJECT : 400/220kV GIS S.S AT ERSAMA, ODISHA & 400kV AIS FEEDER BAY EXTENSION AT DUBURI, ODISHA
CUSTOMER DRAWING NO. : TB-420-516-071-10A

PAGE DESCRIPTION : INTERLOCKING LOGIC-1

BAY NAME : GA, INTERNAL ARRANGEMENT & SCHEMATICS OF LCP FOR 220KV BUS COUPLER & 220KV BUS PT-(D04&D05)

DRAWING NO. : DEEUGBI69513004

APPROVED	K.IKEDA	K.I	02.02.2024
CHECKED	M.SREEDHAR	M.S	02.02.2024
DRAWN	K.MAHESH	K.M	01.02.2024
DESIGN	SRIDEVI.Y	S.Y	11.01.2024
	NAME	SIGN	DATE

SCALE : NTS
REV : 02
PAGE 8
117 PAGES

FORMAT NO. : SG 07 3 04 R0

ALL DIMENSIONS ARE IN MM & WEIGHTS ARE IN kg PER UNIT UNLESS OTHER WISE, SPECIFIED.

REFERENCE: - .....

ALL INFORMATION CONTAINED IN THIS DOCUMENT IS CONFIDENTIAL AND THE PROPERTY OF TOSHIBA TRANSMISSION & DISTRIBUTION SYSTEMS (INDIA) PRIVATE LIMITED. REPRODUCTION OF THIS IN ANY FORM IS TO BE DONE WITH THE SPECIFIC PERMISSION OF THE ORGANISATION.

DS (89A) INTERLOCKING LOGIC

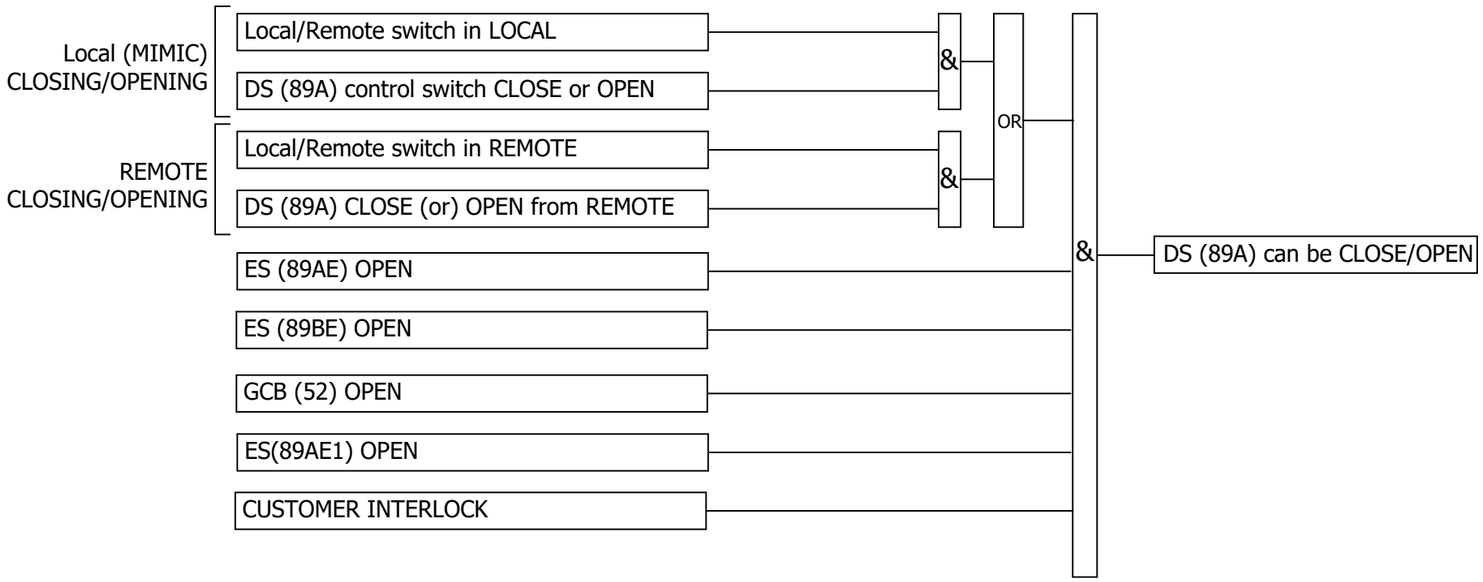

ES (89AE) INTERLOCKING LOGIC

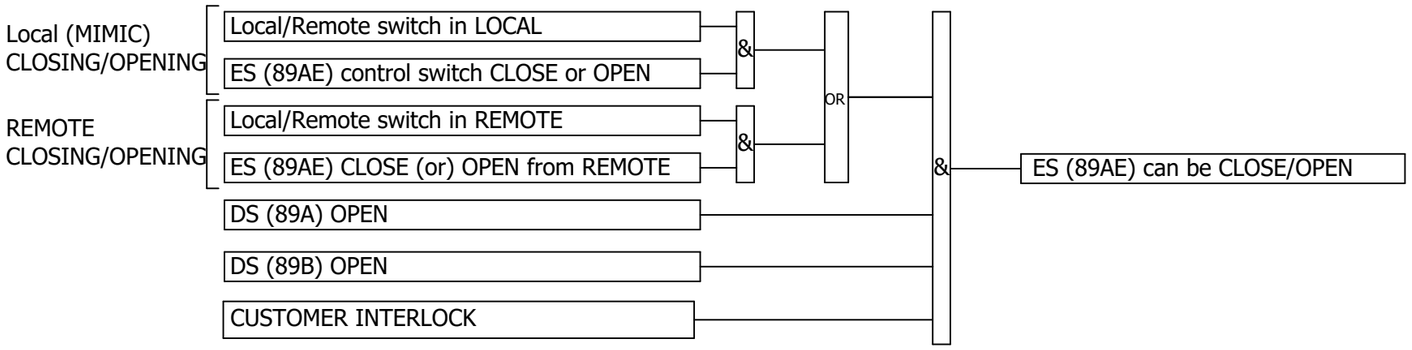

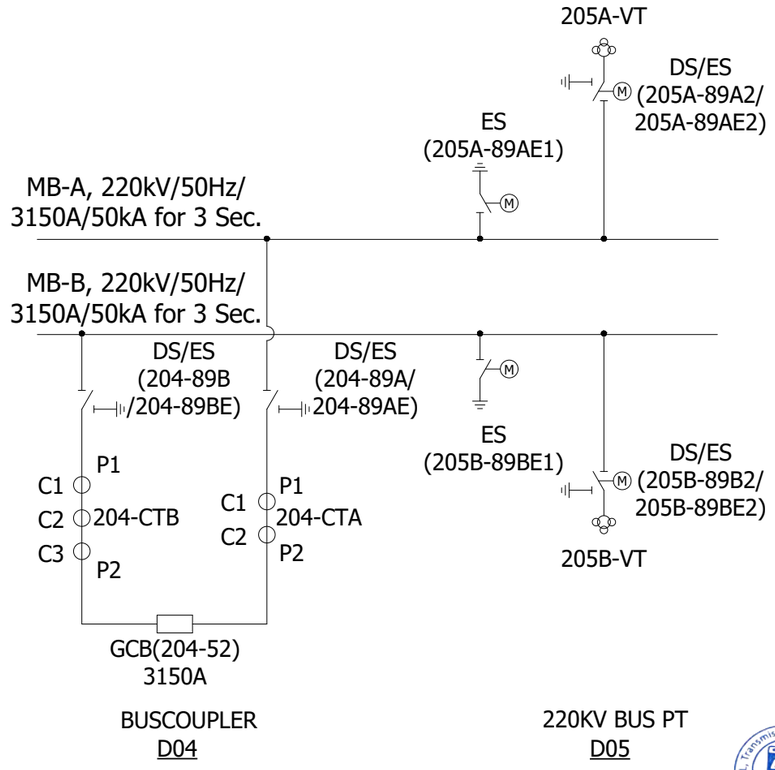

CHECKED
A.G.M (Elect)
ENGG. & QUALITY
OPTCL, BHUBANESWAR

APPROVED
Sr. G.M. (Elect)
ENGG. & QUALITY
OPTCL, BHUBANESWAR

REV	DETAILS OF MODIFICATION	DATE	REV.MARK	MODIFIED	CHECKED	APPROVED
02	AS PER CUST.COMMENT	23.05.2024	SIGN / NAME			
01	AS PER CUST.COMMENT	18.05.2024	SIGN / NAME			
00	FIRST ISSUE	06.02.2024	SIGN / NAME			

TOSHIBA
TRANSMISSION & DISTRIBUTION SYSTEMS (INDIA) PRIVATE LIMITED
SWITCHGEAR PRODUCTS DIVISION

CLIENT : ODISHA POWER TRANSMISSION CO.LTD.
PROJECT : 400/220kV GIS S.S AT ERSAMA, ODISHA & 400kV AIS FEEDER BAY EXTENSION AT DUBURI, ODISHA
CUSTOMER DRAWING NO. : TB-420-516-071-10A

PAGE DESCRIPTION : INTERLOCKING LOGIC-2

BAY NAME : GA, INTERNAL ARRANGEMENT & SCHEMATICS OF LCP FOR 220KV BUS COUPLER & 220KV BUS PT-(D04&D05)

DRAWING NO. : DEEUGBI69513004

APPROVED	K.IKEDA	K.I	02.02.2024
CHECKED	M.SREEDHAR	M.S	02.02.2024
DRAWN	K.MAHESH	K.M	01.02.2024
DESIGN	SRIDEVI.Y	S.Y	11.01.2024
	NAME	SIGN	DATE

SCALE : NTS
REV : 02
PAGE 9 / 117 PAGES

FORMAT NO. : SG 07 3 04 R0

ALL DIMENSIONS ARE IN MM & WEIGHTS ARE IN kg PER UNIT UNLESS OTHER WISE, SPECIFIED.

REFERENCE: - .....

ALL INFORMATION CONTAINED IN THIS DOCUMENT IS CONFIDENTIAL AND THE PROPERTY OF TOSHIBA TRANSMISSION & DISTRIBUTION SYSTEMS (INDIA) PRIVATE LIMITED. REPRODUCTION OF THIS IN ANY FORM IS TO BE DONE WITH THE SPECIFIC PERMISSION OF THE ORGANISATION.

DS (89B) INTERLOCKING LOGIC

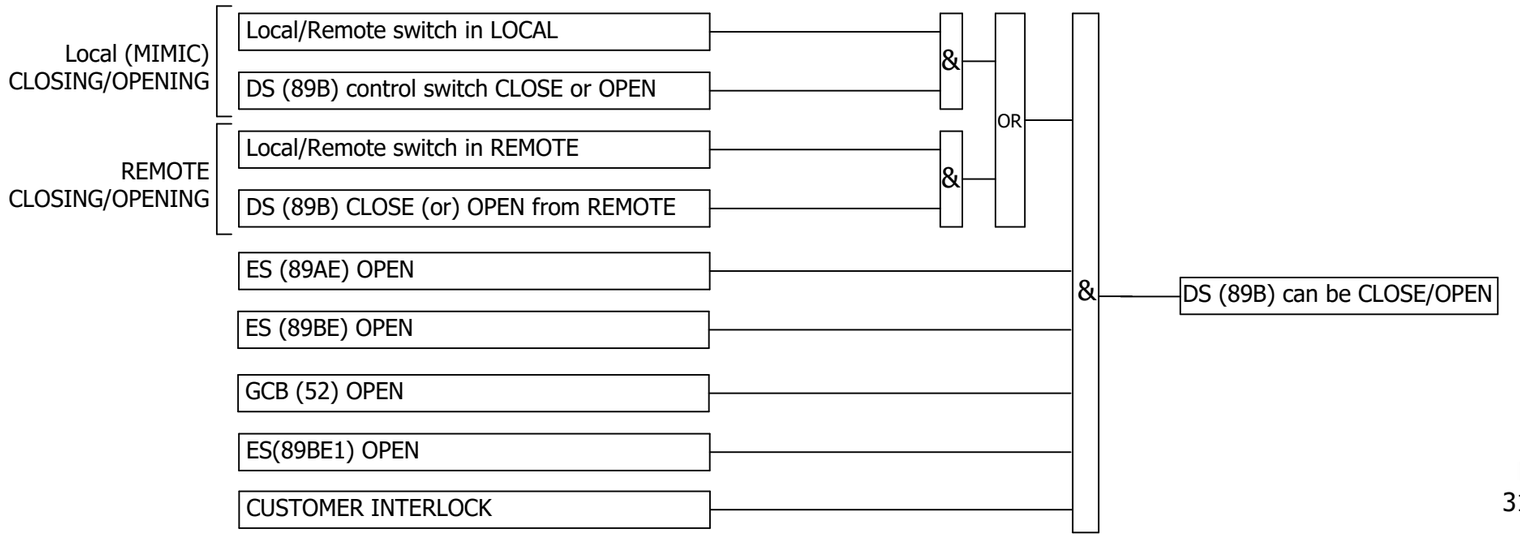

ES (89BE) INTERLOCKING LOGIC

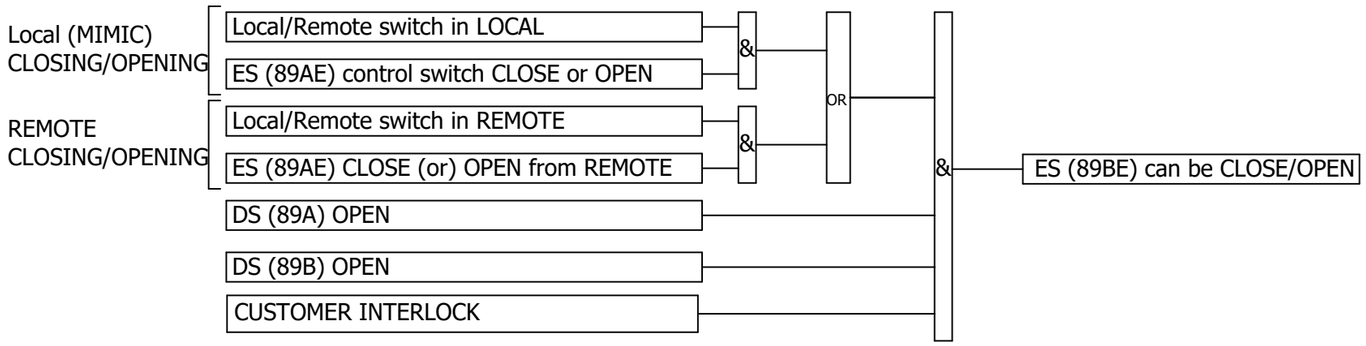

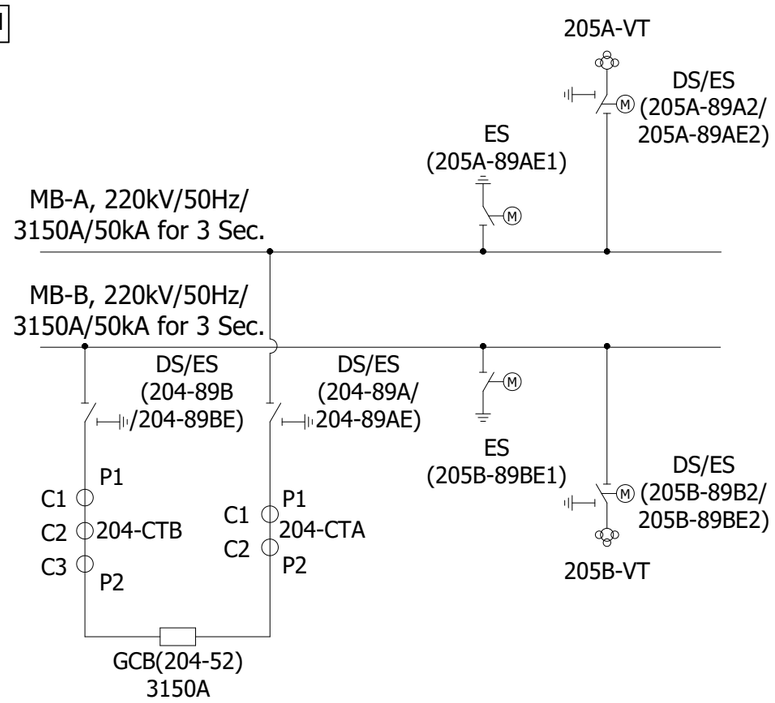

BUSCOUPLER
D04

220KV BUS PT
D05

CHECKED
A.G.M (Elect)
ENGG. & QUALITY
OPTCL, BHUBANESWAR

APPROVED
Sr. G.M. (Elect)
ENGG. & QUALITY
OPTCL, BHUBANESWAR

REV	DETAILS OF MODIFICATION	DATE	REV.MARK	MODIFIED	CHECKED	APPROVED
02	AS PER CUST.COMMENT	23.05.2024	SIGN / NAME			
01	AS PER CUST.COMMENT	18.05.2024	SIGN / NAME			
00	FIRST ISSUE	06.02.2024	SIGN / NAME			

TOSHIBA
TRANSMISSION & DISTRIBUTION SYSTEMS (INDIA) PRIVATE LIMITED
SWITCHGEAR PRODUCTS DIVISION

CLIENT : ODISHA POWER TRANSMISSION CO.LTD.
PROJECT : 400/220kV GIS S.S AT ERSAMA, ODISHA & 400kV AIS FEEDER BAY EXTENSION AT DUBURI, ODISHA
CUSTOMER DRAWING NO. : TB-420-516-071-10A

PAGE DESCRIPTION : INTERLOCKING LOGIC-3

BAY NAME : GA, INTERNAL ARRANGEMENT & SCHEMATICS OF LCP FOR 220KV BUS COUPLER & 220KV BUS PT-(D04&D05)

DRAWING NO. : DEEUGBI69513004

APPROVED	K.IKEDA	K.I	02.02.2024
CHECKED	M.SREEDHAR	M.S	02.02.2024
DRAWN	K.MAHESH	K.M	01.02.2024
DESIGN	SRIDEVI.Y	S.Y	11.01.2024
	NAME	SIGN	DATE

SCALE : NTS
REV : 02
PAGE 10
117 PAGES

FORMAT NO. : SG 07 3 04 R0

ALL DIMENSIONS ARE IN MM & WEIGHTS ARE IN kg PER UNIT UNLESS OTHER WISE, SPECIFIED.

REFERENCE: - .....

ALL INFORMATION CONTAINED IN THIS DOCUMENT IS CONFIDENTIAL AND THE PROPERTY OF TOSHIBA TRANSMISSION & DISTRIBUTION SYSTEMS (INDIA) PRIVATE LIMITED. REPRODUCTION OF THIS IN ANY FORM IS TO BE DONE WITH THE SPECIFIC PERMISSION OF THE ORGANISATION.

ES (89AE1) INTERLOCKING LOGIC

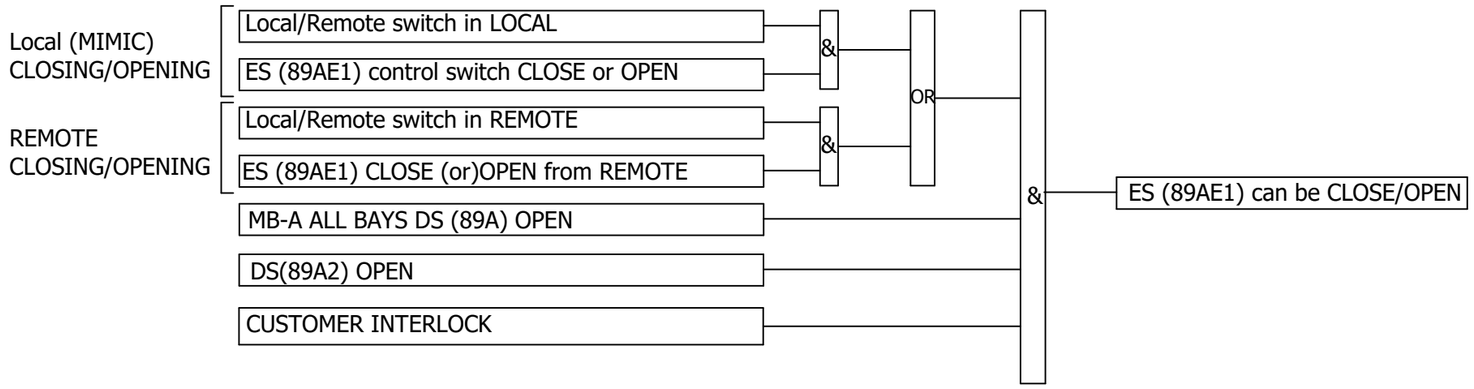

ES (89BE1) INTERLOCKING LOGIC

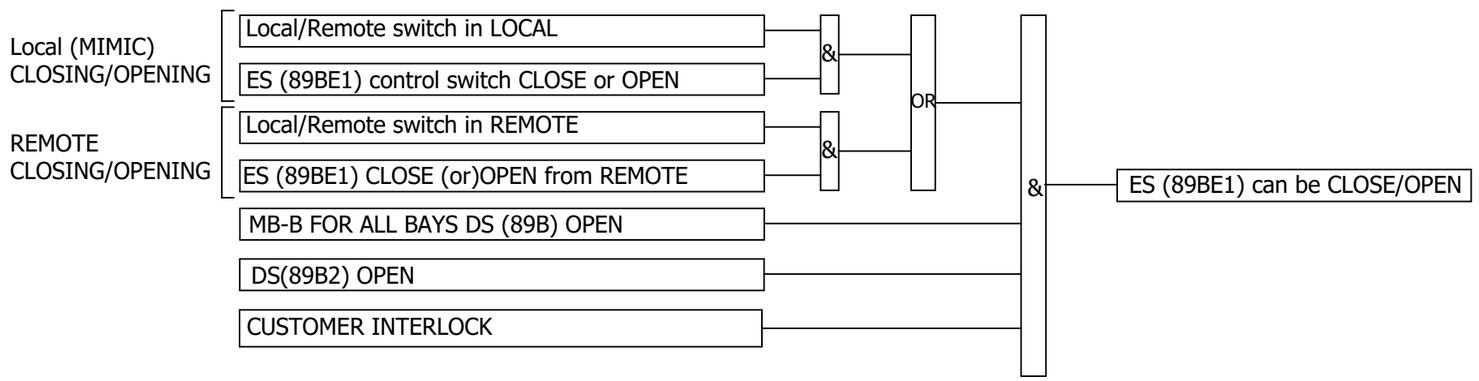

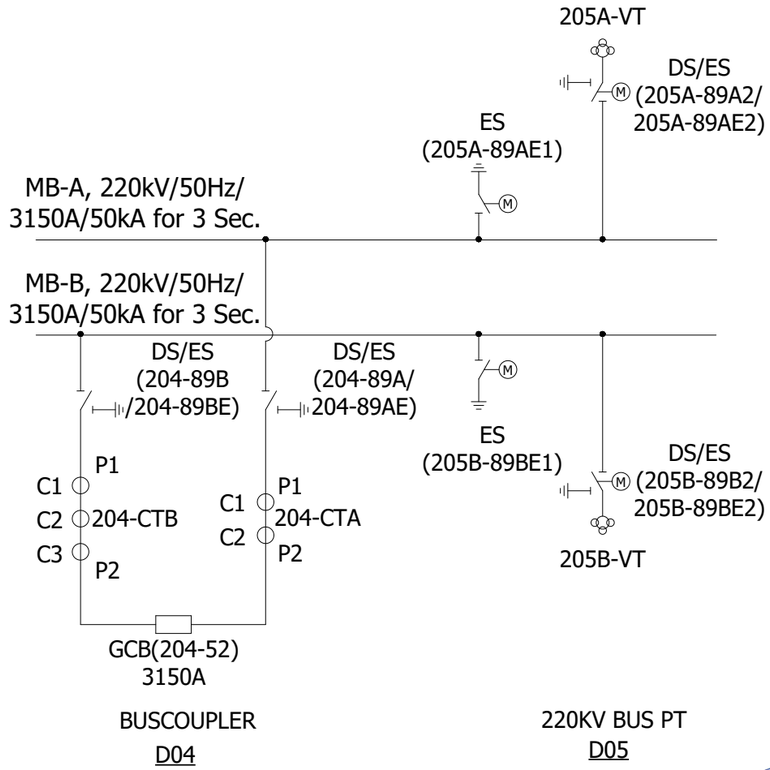

BHEL Transmission Business Group Industry Sector Noida-01

(ANUTEEM KUMAR) MANAGER/ELECT.-TSG

CHECKED
A.G.M (Elect)
ENGG. & QUALITY
OPTCL, BHUBANESWAR

APPROVED
Sr. G.M. (Elect)
ENGG. & QUALITY
OPTCL, BHUBANESWAR

REV	DETAILS OF MODIFICATION	DATE	REV.MARK		MODIFIED	CHECKED	APPROVED
02	AS PER CUST.COMMENT	23.05.2024	△	SIGN			
				NAME			
01	AS PER CUST.COMMENT	18.05.2024	△	SIGN			
				NAME			
00	FIRST ISSUE	06.02.2024	△	SIGN			
				NAME			

TOSHIBA
TRANSMISSION & DISTRIBUTION SYSTEMS (INDIA) PRIVATE LIMITED
SWITCHGEAR PRODUCTS DIVISION

CLIENT : ODISHA POWER TRANSMISSION CO.LTD.
PROJECT : 400/220kV GIS S.S AT ERSAMA, ODISHA & 400kV AIS FEEDER BAY EXTENSION AT DUBURI, ODISHA
CUSTOMER DRAWING NO. : TB-420-516-071-10A

PAGE DESCRIPTION : INTERLOCKING LOGIC-4

BAY NAME : GA, INTERNAL ARRANGEMENT & SCHEMATICS OF LCP FOR 220KV BUS COUPLER & 220KV BUS PT-(D04&D05)

DRAWING NO. : DEEUGBI69513004

APPROVED	K.IKEDA	K.I	02.02.2024
CHECKED	M.SREEDHAR	M.S	02.02.2024
DRAWN	K.MAHESH	K.M	01.02.2024
DESIGN	SRIDEVI.Y	S.Y	11.01.2024
	NAME	SIGN	DATE

SCALE : NTS
REV : 02
PAGE 11
117 PAGES

FORMAT NO. : SG 07 3 04 R0

ALL DIMENSIONS ARE IN MM & WEIGHTS ARE IN kg PER UNIT UNLESS OTHER WISE, SPECIFIED.

REFERENCE: - .....

ALL INFORMATION CONTAINED IN THIS DOCUMENT IS CONFIDENTIAL AND THE PROPERTY OF TOSHIBA TRANSMISSION & DISTRIBUTION SYSTEMS (INDIA) PRIVATE LIMITED. REPRODUCTION OF THIS IN ANY FORM IS TO BE DONE WITH THE SPECIFIC PERMISSION OF THE ORGANISATION.

DS (89A2) INTERLOCKING LOGIC

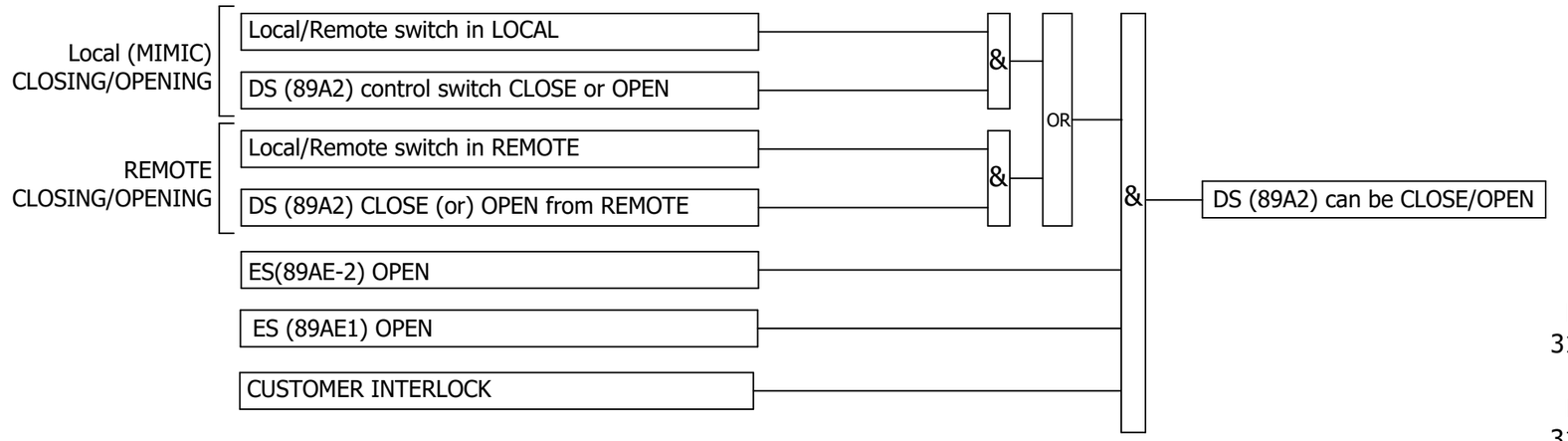

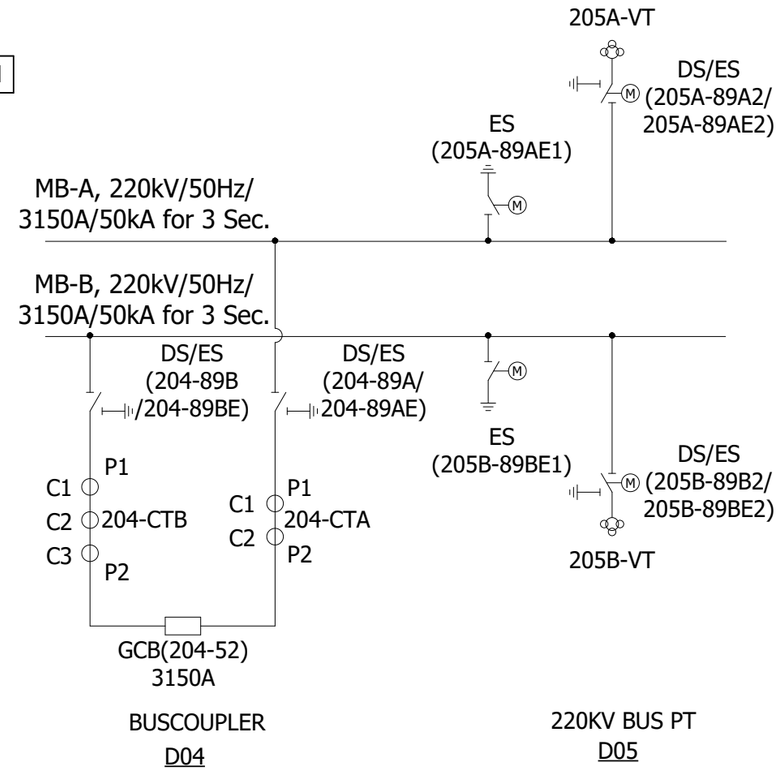

DS (89B2) INTERLOCKING LOGIC

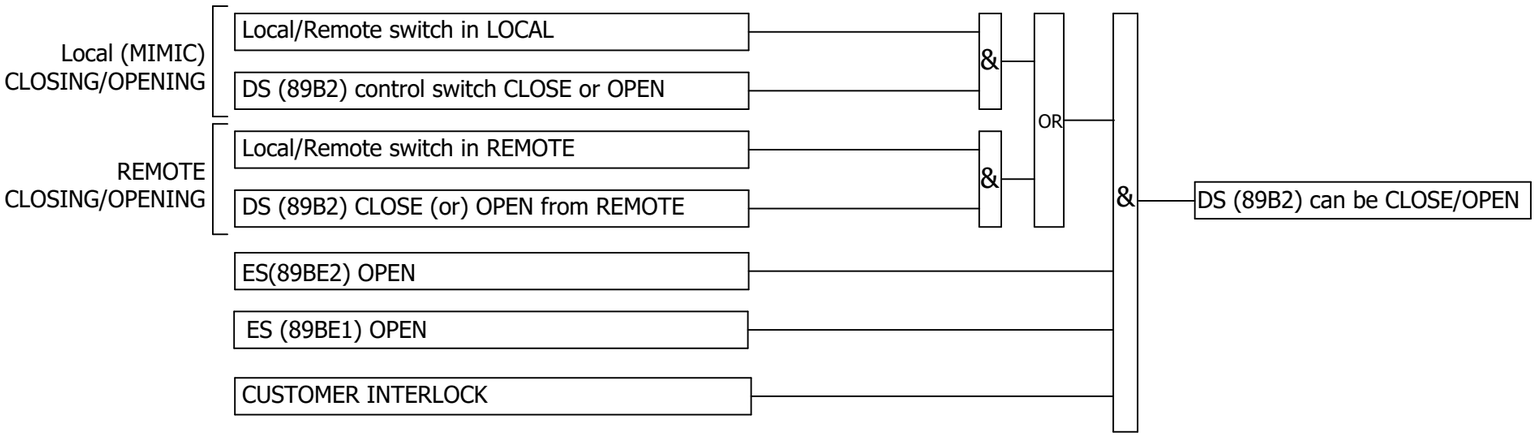

CHECKED
A.G.M (Elect)
ENGG. & QUALITY
OPTCL, BHUBANESWAR

APPROVED
Sr. G.M. (Elect)
ENGG. & QUALITY
OPTCL, BHUBANESWAR

REV	DETAILS OF MODIFICATION	DATE	REV.MARK		MODIFIED	CHECKED	APPROVED
02	AS PER CUST.COMMENT	23.05.2024	△	SIGN			
				NAME			
01	AS PER CUST.COMMENT	18.05.2024	△	SIGN			
				NAME			
00	FIRST ISSUE	06.02.2024	△	SIGN			
				NAME			

TOSHIBA
TRANSMISSION & DISTRIBUTION SYSTEMS (INDIA) PRIVATE LIMITED
SWITCHGEAR PRODUCTS DIVISION

CLIENT : ODISHA POWER TRANSMISSION CO.LTD.
PROJECT : 400/220kV GIS S.S AT ERSAMA, ODISHA & 400kV AIS FEEDER BAY EXTENSION AT DUBURI, ODISHA
CUSTOMER DRAWING NO. : TB-420-516-071-10A

PAGE DESCRIPTION : INTERLOCKING LOGIC-5

BAY NAME : GA, INTERNAL ARRANGEMENT & SCHEMATICS OF LCP FOR 220KV BUS COUPLER & 220KV BUS PT-(D04&D05)
DRAWING NO. : DEEUGBI69513004

	NAME	SIGN	DATE
APPROVED	K.IKEDA	K.I	02.02.2024
CHECKED	M.SREEDHAR	M.S	02.02.2024
DRAWN	K.MAHESH	K.M	01.02.2024
DESIGN	SRIDEVI.Y	S.Y	11.01.2024

SCALE : NTS
REV : 02
PAGE 12
117 PAGES

FORMAT NO. : SG 07 3 04 R0

ALL DIMENSIONS ARE IN MM & WEIGHTS ARE IN kg PER UNIT
UNLESS OTHER WISE, SPECIFIED.

REFERENCE: - .....

ALL INFORMATION CONTAINED IN THIS DOCUMENT IS CONFIDENTIAL AND THE PROPERTY OF TOSHIBA TRANSMISSION & DISTRIBUTION SYSTEMS (INDIA) PRIVATE LIMITED. REPRODUCTION OF THIS IN ANY FORM IS TO BE DONE WITH THE SPECIFIC PERMISSION OF THE ORGANISATION.

ES (89AE2) INTERLOCKING LOGIC

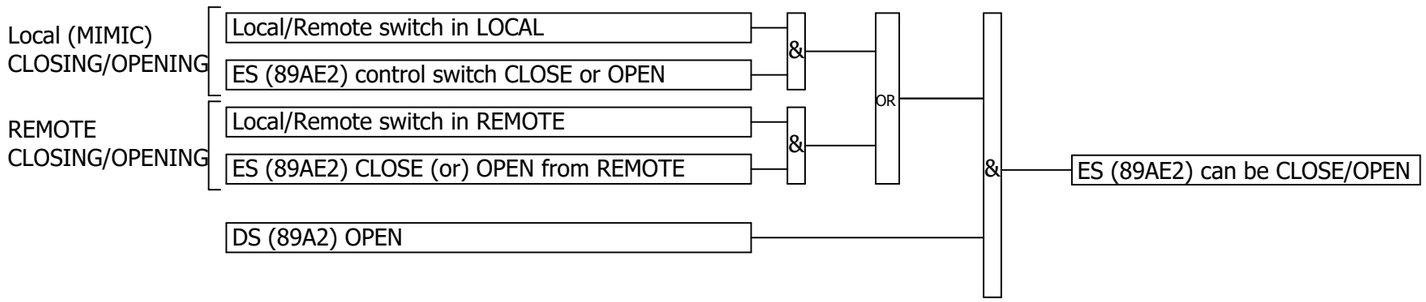

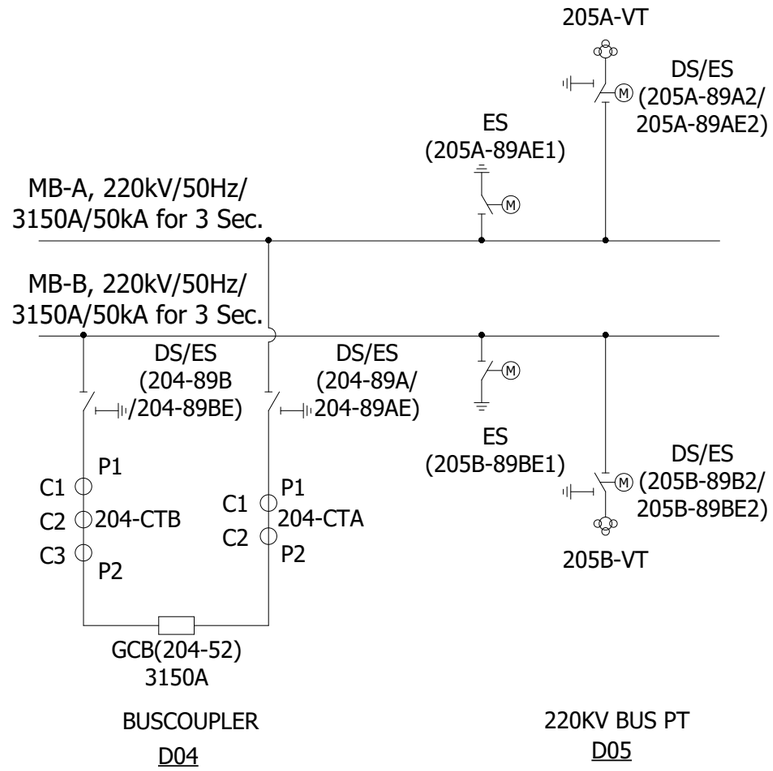

ES (89BE2) INTERLOCKING LOGIC

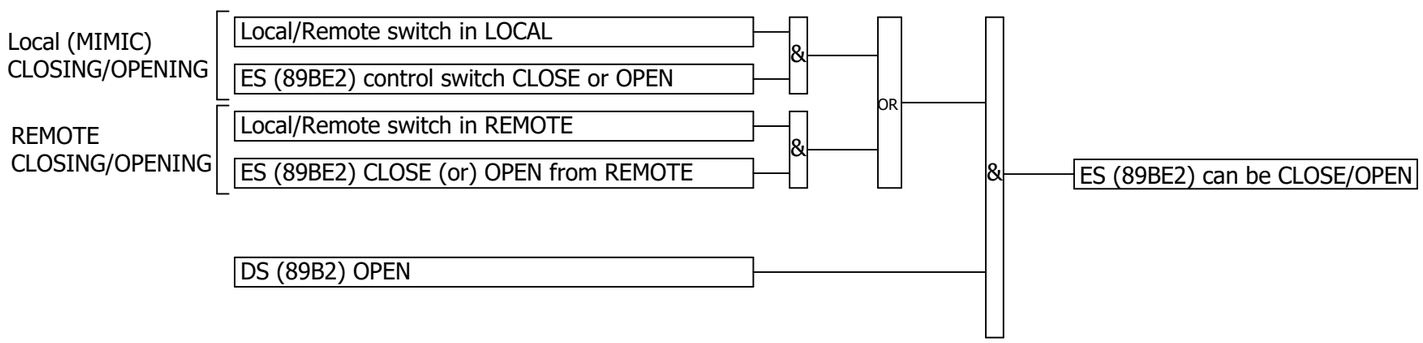

CHECKED
A.G.M (Elect)
ENGG. & QUALITY
OPTCL, BHUBANESWAR

APPROVED
Sr. G.M. (Elect)
ENGG. & QUALITY
OPTCL, BHUBANESWAR

REV	DETAILS OF MODIFICATION	DATE	REV.MARK		MODIFIED	CHECKED	APPROVED
02	AS PER CUST.COMMENT	23.05.2024	△	SIGN			
				NAME			
01	AS PER CUST.COMMENT	18.05.2024	△	SIGN			
				NAME			
00	FIRST ISSUE	06.02.2024	△	SIGN			
				NAME			

TOSHIBA
TRANSMISSION & DISTRIBUTION SYSTEMS (INDIA) PRIVATE LIMITED
SWITCHGEAR PRODUCTS DIVISION

CLIENT : ODISHA POWER TRANSMISSION CO.LTD.
PROJECT : 400/220kV GIS S.S AT ERSAMA, ODISHA & 400kV AIS FEEDER BAY EXTENSION AT DUBURI, ODISHA
CUSTOMER DRAWING NO. : TB-420-516-071-10A

PAGE DESCRIPTION : INTERLOCKING LOGIC-6

BAY NAME : GA, INTERNAL ARRANGEMENT & SCHEMATICS OF LCP FOR 220KV BUS COUPLER & 220KV BUS PT-(D04&D05)

DRAWING NO. : DEEUGBI69513004

APPROVED	K.IKEDA	K.I	02.02.2024
CHECKED	M.SREEDHAR	M.S	02.02.2024
DRAWN	K.MAHESH	K.M	01.02.2024
DESIGN	SRIDEVI.Y	S.Y	11.01.2024
	NAME	SIGN	DATE

SCALE : NTS
REV : 02
PAGE 13
117 PAGES

571089/2024/TBG-TB_ENGG_PA

TENTATIVE

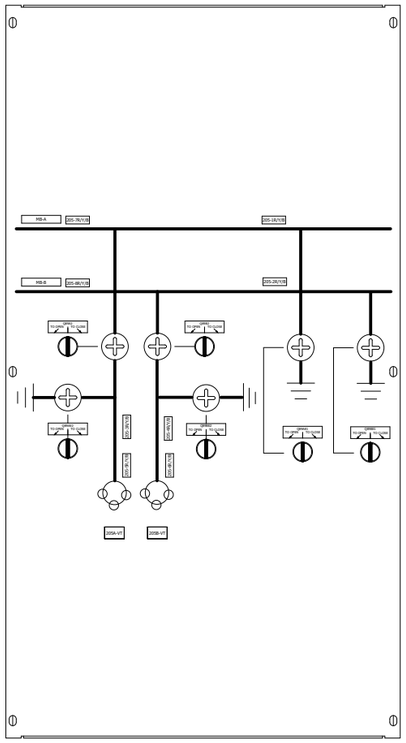

MIMIC DIAGRAM (FRONT VIEW)
220KV BUS PT (D05)

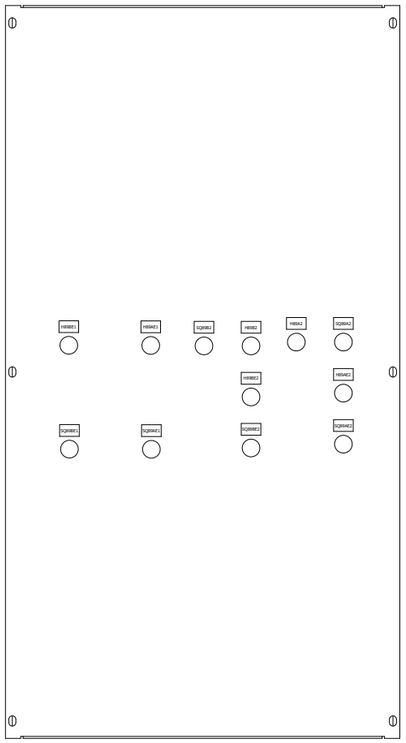

MIMIC DIAGRAM (REAR VIEW)
220KV BUS PT (D05)

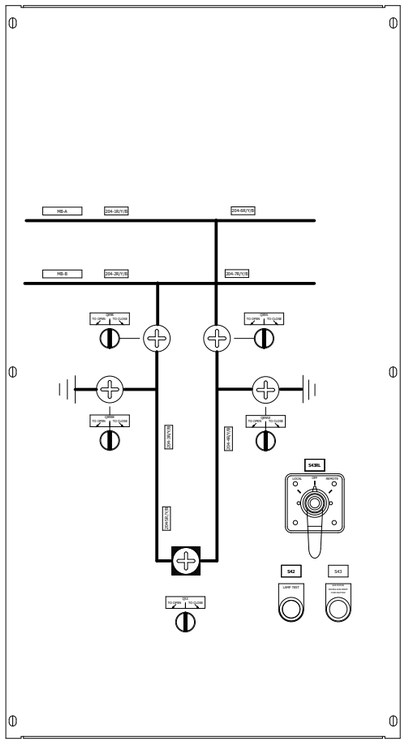

MIMIC DIAGRAM (FRONT VIEW)
BUS COUPLER (D04)

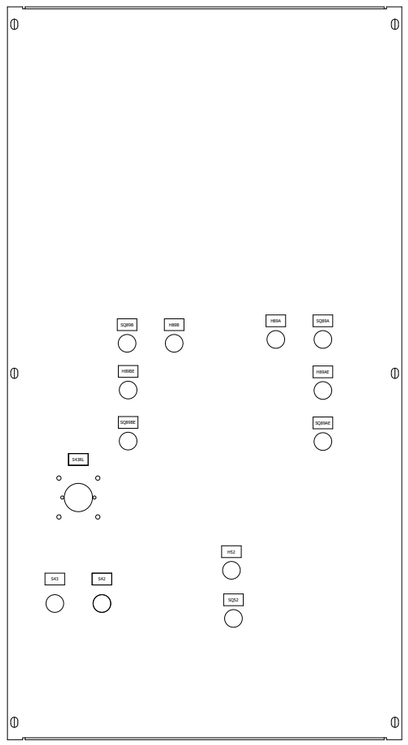

MIMIC DIAGRAM (REAR VIEW)
BUS COUPLER (D04)

CHECKED
A.G.M (Elect)
ENGG. & QUALITY
OPTCL, BHUBANESWAR

APPROVED
Sr. G.M. (Elect)
ENGG. & QUALITY
OPTCL, BHUBANESWAR

CONTROL SWITCH & LAMP INDICATORS

3 POSITION SPRING RETURN SWITCH GCB & DS/ES OPEN/CLOSE OPERATION	LAMP INDICATORS	
	GCB & DS	ES & HES
TO OPEN OFF TO CLOSE 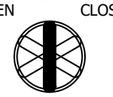	RED (CLOSE) 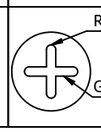 GREEN (OPEN)	GREEN (OPEN) 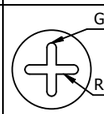 RED (CLOSE)

MIMIC DIAGRAM (REAR VIEW LABEL)
S (52,89A,89B,89AE,89BE,89AE1,89BE1,89A2,89B2,89AE2&89BE2) - OPEN/CLOSE CONTROL SW. LABEL
H (52,89A,89B,89AE,89BE,89AE1,89BE1,89A2,89B2,89AE2&89BE2) - LAMP INDICATORS LABEL
S43RL - LOCAL & REMOTE SW. LABEL
S42 - LAMP TEST PUSH BUTTON LABEL
S43 - GCB MOTOR EXCESS RUN RESET PUSH BUTTON LABEL

SPECIFICATION OF SWITCH

SWITCH	INSCRIPTION	SWITCH	INSCRIPTION
S43RL CHANGE OVER SWITCH *1 *3	OFF LOCAL REMOTE *2=REMOTE	S43 PUSH BUTTON	GCB MOTOR EXCESS RUN RESET
CONTROL SWITCH FOR GCB, DS, ES	TO OPEN OFF TO CLOSE	S42 PUSH BUTTON	LAMP TEST

NOTE:
*1 = KEY LOCK FACILITY
*2 = KEY REMOVAL POSITION
*3 = STAY PUT

SPECIFICATION OF MIMIC BUS / SYMBOLS

MATERIAL	STRIP		
CIRCUIT	COLOR	WIDTH	MARK
220kV	GOLDEN YELLOW (IS 5:356)	10mm	
EARTH	TRAFFIC BLACK (RAL 9017)	5mm	

FIXING: GLUE

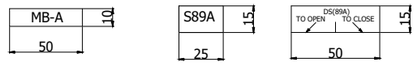

BHEL Transmission Business Group Industry Sector Noida 01

ALL INFORMATION CONTAINED IN THIS DOCUMENT IS CONFIDENTIAL AND THE PROPERTY OF TOSHIBA TRANSMISSION & DISTRIBUTION SYSTEMS (INDIA) PRIVATE LIMITED. REPRODUCTION OF THIS IN ANY FORM IS TO BE DONE WITH THE SPECIFIC PERMISSION OF THE ORGANISATION.

ALL DIMENSIONS ARE IN MM & WEIGHTS ARE IN kg PER UNIT UNLESS OTHER WISE, SPECIFIED.

REFERENCE: - .....

FORMAT NO. : SG 07 3 04 R0

REV	DETAILS OF MODIFICATION	DATE	REV.MARK	MODIFIED	CHECKED	APPROVED
02	AS PER CUST.COMMENT	23.05.2024				
01	AS PER CUST.COMMENT	18.05.2024				
00	FIRST ISSUE	06.02.2024				

CHECKED A.G.M (Elect) ENGG. & QUALITY OPTCL, BHUBANESWAR — APPROVED Sr. G.M. (Elect) ENGG. & QUALITY OPTCL, BHUBANESWAR

SIGN / NAME

TOSHIBA
TRANSMISSION & DISTRIBUTION SYSTEMS (INDIA) PRIVATE LIMITED
SWITCHGEAR PRODUCTS DIVISION

CLIENT : ODISHA POWER TRANSMISSION CO.LTD.
PROJECT : 400/220kV GIS S.S AT ERSAMA, ODISHA & 400kV AIS FEEDER BAY EXTENSION AT DUBURI, ODISHA
CUSTOMER DRAWING NO. : TB-420-516-071-10A

PAGE DESCRIPTION : MIMIC

BAY NAME : GA, INTERNAL ARRANGEMENT & SCHEMATICS OF LCP FOR 220KV BUS COUPLER & 220KV BUS PT-(D04&D05)

DRAWING NO. : DEEUGBI69513004

	NAME	SIGN	DATE
APPROVED	K.IKEDA	K.I	02.02.2024
CHECKED	M.SREEDHAR	M.S	02.02.2024
DRAWN	K.MAHESH	K.M	01.02.2024
DESIGN	SRIDEVI.Y	S.Y	11.01.2024

SCALE : NTS
REV : 02
PAGE 14
117 PAGES

FORMAT NO. : SG 07 3 04 R0

ALL DIMENSIONS ARE IN MM & WEIGHTS ARE IN kg PER UNIT UNLESS OTHER WISE, SPECIFIED.

REFERENCE: - .....

ALL INFORMATION CONTAINED IN THIS DOCUMENT IS CONFIDENTIAL AND THE PROPERTY OF TOSHIBA TRANSMISSION & DISTRIBUTION SYSTEMS (INDIA) PRIVATE LIMITED. REPRODUCTION OF THIS IN ANY FORM IS TO BE DONE WITH THE SPECIFIC PERMISSION OF THE ORGANISATION.

TENTATIVE

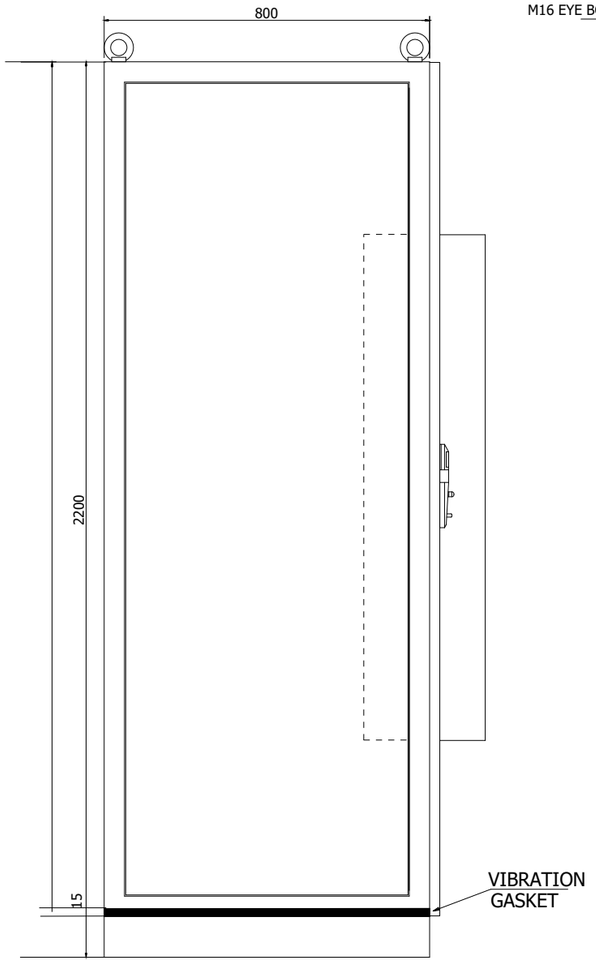

LEFT SIDE VIEW

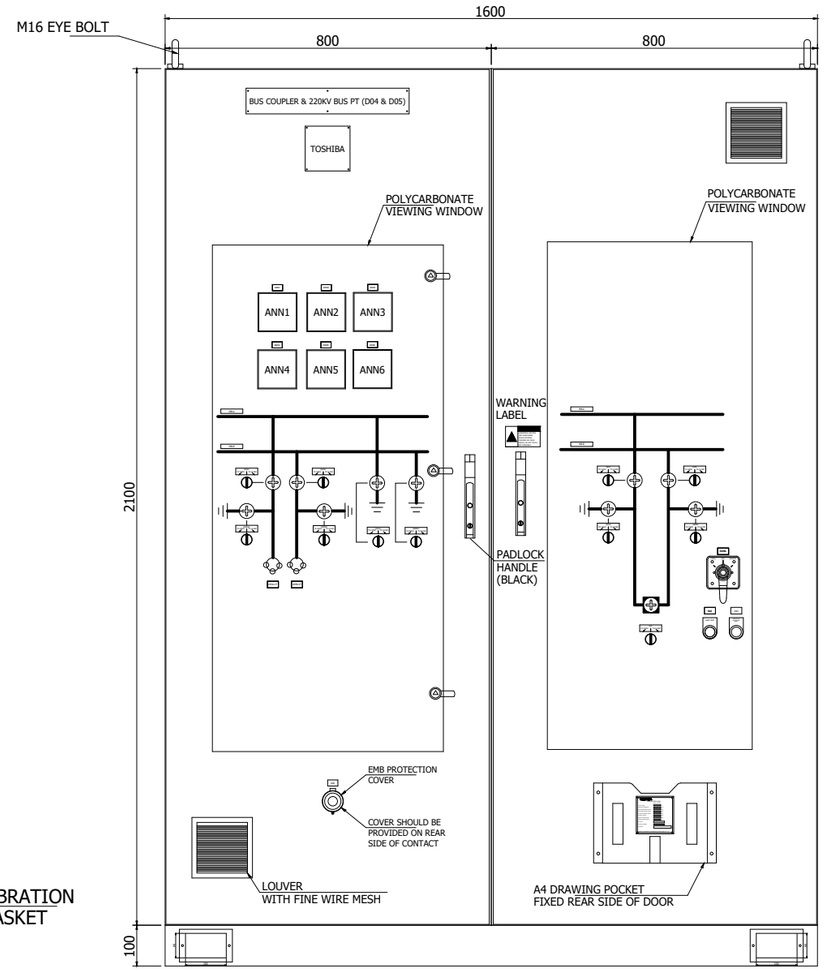

FRONT VIEW OF OUTER DOOR

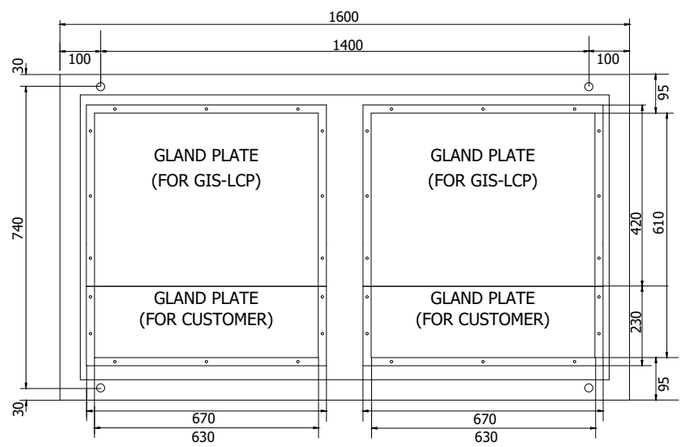

(FRONT SIDE)

BOTTOM VIEW

PANEL SPECIFICATION

1. MATERIAL
   a) COLD ROLLED SHEET STEEL
2. SHEET THICKNESS
   a) GLAND PLATE : 3MM
   b) ALL OTHER : 2.5MM
3. DOOR OPENING
   a) LEFT DOOR : LEFT HAND OPENING
   b) RIGHT DOOR : RIGHT HAND OPENING
4. DOOR OPENING ANGLE: 90° & 120° (WITH STOPPER)
5. PROTECTION CLASS
   a) ENCLOSURE : IP 54 (INDOOR APPLICATION)
6. COLOUR
   a) EXTERNAL SURFACE : RAL 7035 (LIGHT GREY) (MATT FINISH)
   b) INTERNAL SURFACE : RAL 9010 (WHITE) (FULL GLOSSY)
   c) PLINTH : RAL 9005 (BLACK)) (MATT FINISH)
   d) MIMIC PLATE : RAL 9010 (WHITE) (FULL GLOSSY)
   e) MIMIC : GOLDEN YELLOW-SHADE 356 OF IS 5
   f) EARTH SYMBOL : BLACK
7. POWDER COATING THICKNESS (OUTSIDE/INSIDE SURFACE)
   a) MINIMUM-70µ, MAXIMUM-150µ
8. LABEL DETAILS
   a) LCP NAME PLATE : LEFT FRONT DOOR TOP
   b) LCP RATING PLATE : ON DRAWING POCKET
   c) FIRM NAME PLATE : LEFT DOOR ABOVE THE VIEWING WINDOW
   d) WARNING LABEL : RIGHT DOOR ABOVE FRONT DOOR HANDLE
9. GASKETS: LCC DOORS & PROTECTIVE SHEET DOOR TO BE GASKETED WITH NEOPRENE/EPDB GASKETS AND SHOULD NOT VISIBLE FROM OUTSIDE
10. A4 SIZE DRAWING POCKET TO BE PROVIDED AT FRONT DOOR REAR SIDE BOTTOM
11. OUTER DOOR 3-POINT LOCK'S PADLOCK AND IT'S LOCKING PIN MUST BE SS MATERIAL -316 GRADE
12. ALL DIMENSION ARE IN MM UNLESS SPECIFIED.

CHECKED
A.G.M (Elect)
ENGG. & QUALITY
OPTCL, BHUBANESWAR

APPROVED
Sr. G.M. (Elect)
ENGG. & QUALITY
OPTCL, BHUBANESWAR

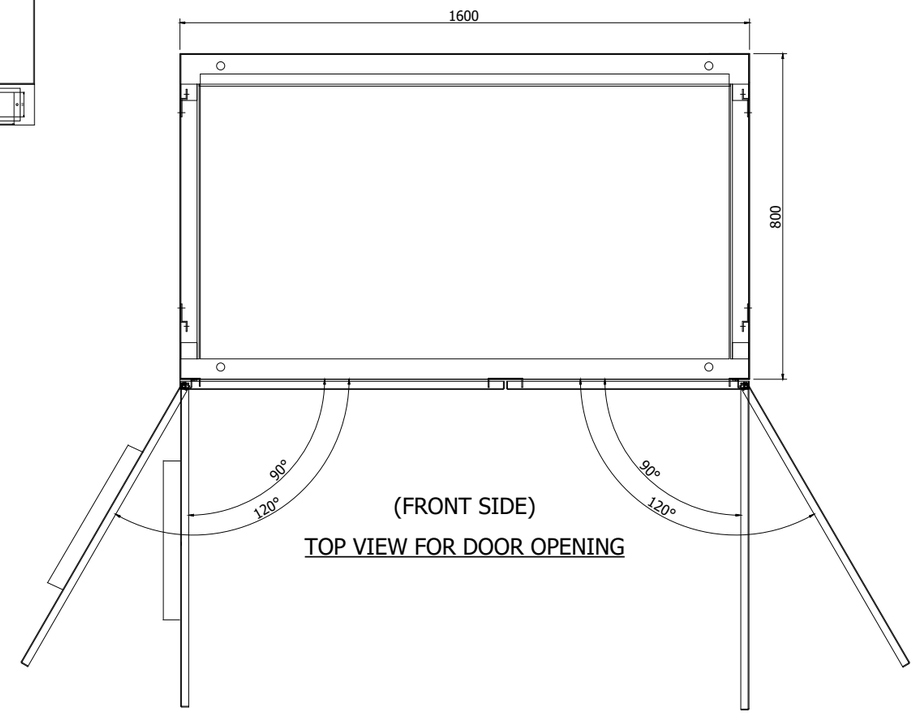

(FRONT SIDE)

TOP VIEW FOR DOOR OPENING

BHEL Transmission Business Group Industry Sector Noida-01

(ANILESH KUMAR)
MANAGER/BHEL-TBG

REV	DETAILS OF MODIFICATION	DATE	REV.MARK		MODIFIED	CHECKED	APPROVED
02	AS PER CUST.COMMENT	23.05.2024	△	SIGN			
				NAME			
01	AS PER CUST.COMMENT	18.05.2024	△	SIGN			
				NAME			
00	FIRST ISSUE	06.02.2024	△	SIGN			
				NAME			

TOSHIBA
TRANSMISSION & DISTRIBUTION SYSTEMS (INDIA) PRIVATE LIMITED
SWITCHGEAR PRODUCTS DIVISION

CLIENT : ODISHA POWER TRANSMISSION CO.LTD.
PROJECT : 400/220kV GIS S.S AT ERSAMA, ODISHA & 400kV AIS FEEDER BAY EXTENSION AT DUBURI, ODISHA
CUSTOMER DRAWING NO. : TB-420-516-071-10A

PAGE DESCRIPTION : OUTLINE OF LCP

BAY NAME : GA, INTERNAL ARRANGEMENT & SCHEMATICS OF LCP FOR 220KV BUS COUPLER & 220KV BUS PT-(D04&D05)
DRAWING NO. : DEEUGBI69513004

	NAME	SIGN	DATE
APPROVED	K.IKEDA	K.I	02.02.2024
CHECKED	M.SREEDHAR	M.S	02.02.2024
DRAWN	K.MAHESH	K.M	01.02.2024
DESIGN	SRIDEVI.Y	S.Y	11.01.2024

SCALE : NTS
REV : 02
PAGE 15 117 PAGES

571089/2024/TBG-TB_ENGG_PA

FORMAT NO. : SG 07 3 04 R0

ALL DIMENSIONS ARE IN MM & WEIGHTS ARE IN kg PER UNIT
UNLESS OTHER WISE, SPECIFIED.
REFERENCE: - .....

ALL INFORMATION CONTAINED IN THIS DOCUMENT IS CONFIDENTIAL AND THE PROPERTY OF TOSHIBA TRANSMISSION & DISTRIBUTION SYSTEMS (INDIA) PRIVATE LIMITED. REPRODUCTION OF THIS IN ANY FORM IS TO BE DONE WITH THE SPECIFIC PERMISSION OF THE ORGANISATION.

TENTATIVE

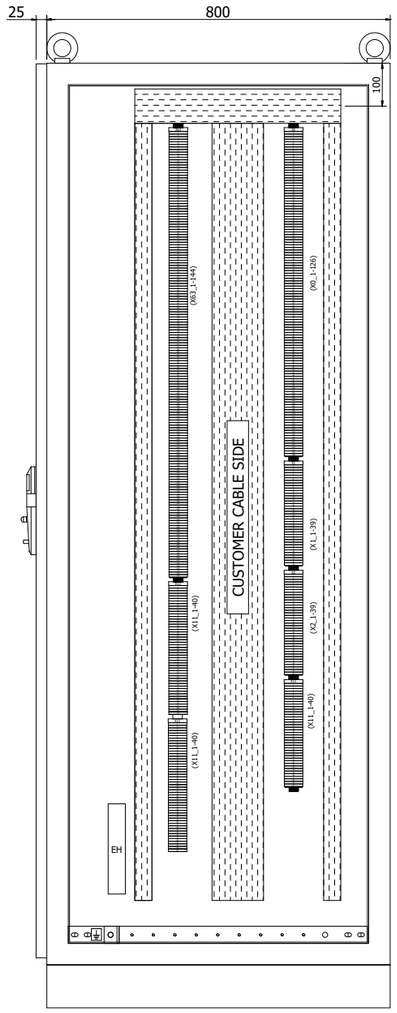

VIEW B-B

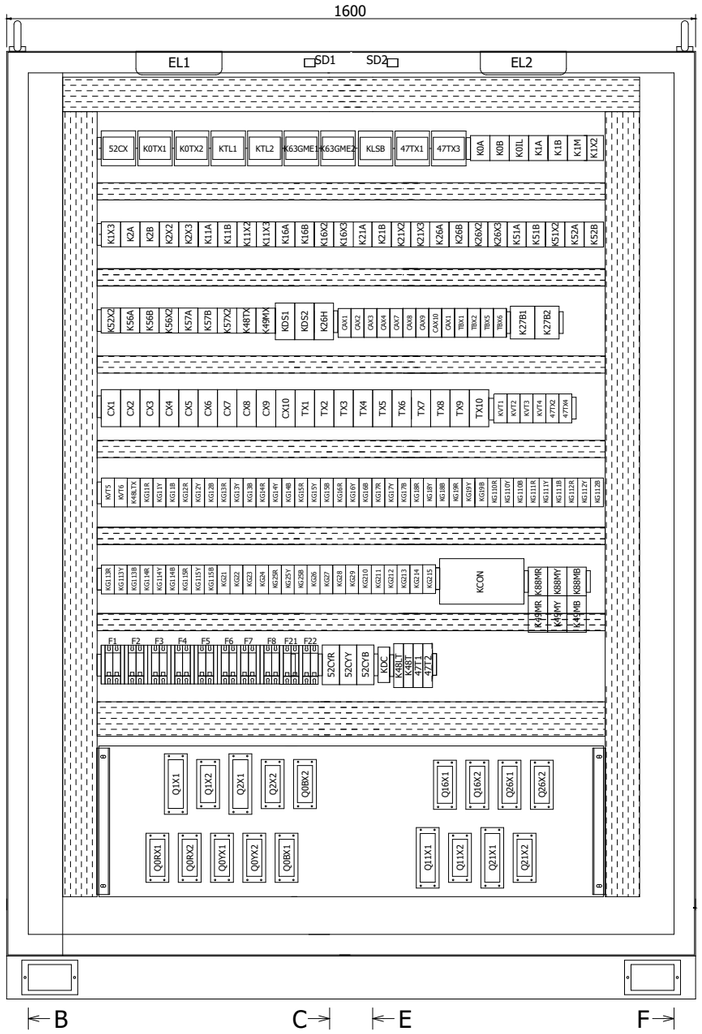

VIEW D-D

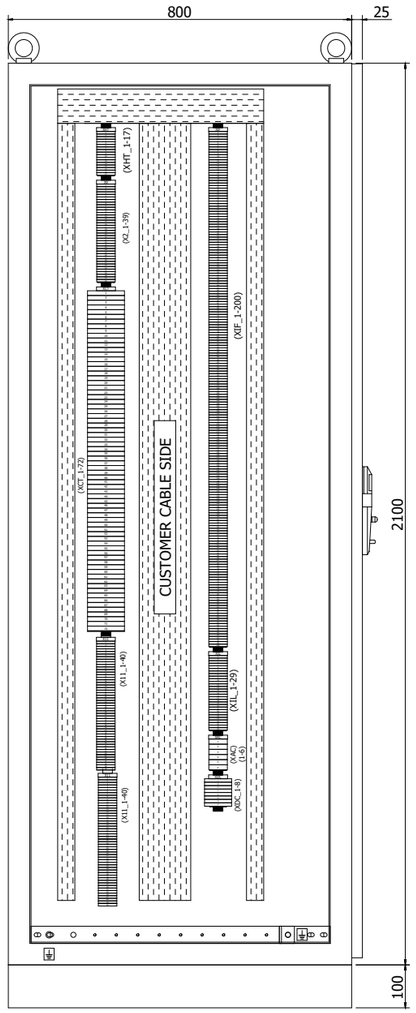

VIEW C-C

WARNING LABEL (FIXING GLUE

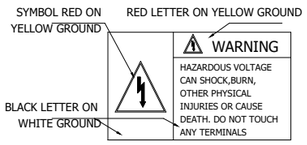

SPECIFICATION OF NAME PLATE

MATERIAL : STAINLESS STEEL (400 X 63)
FIXING : M3x8mm SS SCREW
BLACK LETTER ON SILVER GROUND

BUSCOUPLER & 220KV BUS PT (D04&D05)

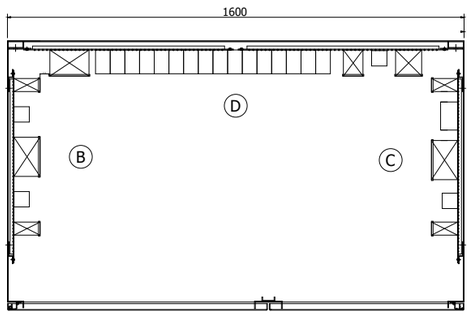

TOP VIEW

NOTE:1

TAG NAME SHOULD BE PLACED ON BOTH PANEL & DEVICE CORRESPONDING
SPECIFICATION OF CARD PLATE:
ENGRAVED BLACK LETTER ON WHITE BACK GROUND
MATERIAL: LAMICOID
FIXING: GLUE
SIZE: SUITABLE SIZE

NOTE:2

1) ALL INDIVIDUAL BOTTOM PLATES ARE GASKETTED & 3MM THICK CRCA
2) BOTTOM PLATES ARE DRILLED AT SITE
3) CABLES FROM GIS TO LCP (CABLE GLANDS & ASSOCIATED ACCESSORIES ARE SUPPLIED BY TOSHIBA-TTDI)
4) CABLES FROM CENTRAL CONTROL SYSTEM TO LCP (CABLES & COMPRESSION GLANDS & OTHER ASSOCIATED ACCESSORIES ARE OUT OF SCOPE OF SUPPLY)

NOTE:3

1) COMPONENTS POSITION MAY VARY DURING DETAIL ENGINEERING AFTER APPROVAL OF SCHEMATIC.

BHEL Transmission Business Group Industry Sector Noida-01

CHECKED
A.G.M (Elect)
ENGG. & QUALITY
OPTCL, BHUBANESWAR

APPROVED
Sr. G.M. (Elect)
ENGG. & QUALITY
OPTCL, BHUBANESWAR

(ANUILEEM KUMAR)
MANAGER/BHEL-TBG

REV	DETAILS OF MODIFICATION	DATE	REV.MARK		MODIFIED	CHECKED	APPROVED
02	AS PER CUST.COMMENT	23.05.2024	△	SIGN			
				NAME			
01	AS PER CUST.COMMENT	18.05.2024	△	SIGN			
				NAME			
00	FIRST ISSUE	06.02.2024	△	SIGN			
				NAME			

TOSHIBA
TRANSMISSION & DISTRIBUTION SYSTEMS (INDIA) PRIVATE LIMITED
SWITCHGEAR PRODUCTS DIVISION

CLIENT : ODISHA POWER TRANSMISSION CO.LTD.
PROJECT : 400/220kV GIS S.S AT ERSAMA, ODISHA & 400kV AIS FEEDER BAY EXTENSION AT DUBURI, ODISHA
CUSTOMER DRAWING NO. : TB-420-516-071-10A

PAGE DESCRIPTION : INTERNAL ARRANGEMENT OF LCP

BAY NAME : GA, INTERNAL ARRANGEMENT & SCHEMATICS OF LCP FOR 220KV BUS COUPLER & 220KV BUS PT-(D04&D05)

DRAWING NO. : DEEUGBI69513004

APPROVED	K.IKEDA	K.I	02.02.2024
CHECKED	M.SREEDHAR	M.S	02.02.2024
DRAWN	K.MAHESH	K.M	01.02.2024
DESIGN	SRIDEVI.Y	S.Y	11.01.2024
	NAME	SIGN	DATE

SCALE : NTS
REV : 02
PAGE 16
117 PAGES

571089/2024/TBG-TB_ENGG_PA

FORMAT NO. : SG 07 3 04 R0

ALL DIMENSIONS ARE IN MM & WEIGHTS ARE IN kg PER UNIT UNLESS OTHER WISE, SPECIFIED.

REFERENCE: - .....

ALL INFORMATION CONTAINED IN THIS DOCUMENT IS CONFIDENTIAL AND THE PROPERTY OF TOSHIBA TRANSMISSION & DISTRIBUTION SYSTEMS (INDIA) PRIVATE LIMITED. REPRODUCTION OF THIS IN ANY FORM IS TO BE DONE WITH THE SPECIFIC PERMISSION OF THE ORGANISATION.

ANNUNCIATOR DESCRIPTION

LED COLOUR: RED

CHECKED — A.G.M (Elect) ENGG. & QUALITY OPTCL, BHUBANESWAR

APPROVED — Sr. G.M. (Elect) ENGG. & QUALITY OPTCL, BHUBANESWAR

ANN1

F1	LOW GAS PRES. LVL-1 ALARM (204-1R)	F9	LOW GAS PRES. LVL-1 ALARM (203-4B)
F2	LOW GAS PRES. LVL-1 ALARM (204-1Y)	F10	LOW GAS PRES. LVL-1 ALARM (204-4R)
F3	LOW GAS PRES. LVL-1 ALARM (204-1B)	F11	LOW GAS PRES. LVL-1 ALARM (204-4Y)
F4	LOW GAS PRES. LVL-1 ALARM (204-2R)	F12	LOW GAS PRES. LVL-1 ALARM (204-4B)
F5	LOW GAS PRES. LVL-1 ALARM (204-2Y)	F13	LOW GAS PRES. LVL-1 GCB ALARM (204-5R)
F6	LOW GAS PRES. LVL-1 ALARM (204-2B)	F14	LOW GAS PRES. LVL-1 GCB ALARM (204-5Y)
F7	LOW GAS PRES. LVL-1 ALARM (204-3R)	F15	LOW GAS PRES. LVL-1 GCB ALARM (204-5B)
F8	LOW GAS PRES. LVL-1 ALARM (204-3Y)	F16	LOW GAS PRES. LVL-1 ALARM (204-6R)

TEST · MUTE · ACK. · RST.

MBAS 11 ALARM ANNUNCIATOR

ANN2

F1	LOW GAS PRES. LVL-1 ALARM (204-6Y)	F9	LOW GAS PRES. LVL-1 ALARM (205-2R)
F2	LOW GAS PRES. LVL-1 ALARM (204-6B)	F10	LOW GAS PRES. LVL-1 ALARM (205-2Y)
F3	LOW GAS PRES. LVL-1 ALARM (204-7R)	F11	LOW GAS PRES. LVL-1 ALARM (205-2B)
F4	LOW GAS PRES. LVL-1 ALARM (204-7Y)	F12	LOW GAS PRES. LVL-2 ALARM (205-3R)
F5	LOW GAS PRES. LVL-1 ALARM (204-7B)	F13	LOW GAS PRES. LVL-2 ALARM (205-3Y)
F6	LOW GAS PRES. LVL-1 ALARM (205-1R)	F14	LOW GAS PRES. LVL-2 ALARM (205-3B)
F7	LOW GAS PRES. LVL-1 ALARM (205-1Y)	F15	LOW GAS PRES. LVL-2 ALARM (205-4R)
F8	LOW GAS PRES. LVL-1 ALARM (205-1B)	F16	LOW GAS PRES. LVL-2 ALARM (205-4Y)

TEST · MUTE · ACK. · RST.

MBAS 11 ALARM ANNUNCIATOR

ANN3

F1	LOW GAS PRES. LVL-1 ALARM (205-4B)	F9	LOW GAS PRES. LVL-1 ALARM (205-7Y)
F2	LOW GAS PRES. LVL-1 ALARM (205-5R)	F10	LOW GAS PRES. LVL-1 ALARM (205-7B)
F3	LOW GAS PRES. LVL-1 ALARM (205-5Y)	F11	LOW GAS PRES. LVL-1 ALARM (205-8R)
F4	LOW GAS PRES. LVL-1 ALARM (205-5B)	F12	LOW GAS PRES. LVL-1 ALARM (205-8Y)
F5	LOW GAS PRES. LVL-1 ALARM (205-6R)	F13	LOW GAS PRES. LVL-1 ALARM (205-8B)
F6	LOW GAS PRES. LVL-1 ALARM (205-6Y)	F14	LOW GAS PRES. LVL-2 ALARM (204-1R/Y/B)
F7	LOW GAS PRES. LVL-1 ALARM (205-6B)	F15	LOW GAS PRES. LVL-2 ALARM (204-2R/Y/B)
F8	LOW GAS PRES. LVL-1 ALARM (205-7R)	F16	LOW GAS PRES. LVL-2 ALARM (204-3R/Y/B)

TEST · MUTE · ACK. · RST.

MBAS 11 ALARM ANNUNCIATOR

ANN4

F1	LOW GAS PRES. LVL-2 ALARM (204-4R/Y/B)	F9	LOW GAS PRES. LVL-2 ALARM (205-3R/Y/B)
F2	LOW GAS PRES. LVL-2 GCB CLOSE BLOCK & TRIP BLOCK (204-5R)	F10	LOW GAS PRES. LVL-2 ALARM (205-4R/Y/B)
F3	LOW GAS PRES. LVL-2 GCB CLOSE BLOCK & TRIP BLOCK (204-5Y)	F11	LOW GAS PRES. LVL-2 ALARM (205-5R/Y/B)
F4	LOW GAS PRES. LVL-2 GCB CLOSE BLOCK & TRIP BLOCK (204-5B)	F12	LOW GAS PRES. LVL-2 ALARM (205-6R/Y/B)
F5	LOW GAS PRES. LVL-2 ALARM (204-6R/Y/B)	F13	LOW GAS PRES. LVL-2 ALARM (205-7R/Y/B)
F6	LOW GAS PRES. LVL-2 ALARM (204-7R/Y/B)	F14	LOW GAS PRES. LVL-2 ALARM (205-8R/Y/B)
F7	LOW GAS PRES. LVL-2 ALARM (205-1R/Y/B)	F15	GCB SPRING CHARGING INCOMP. MOTOR EXC. RUN
F8	LOW GAS PRES. LVL-2 ALARM (205-2R/Y/B)	F16	GCB MOTOR OVER CURRENT

TEST · MUTE · ACK. · RST.

MBAS 11 ALARM ANNUNCIATOR

ANN5

F1	GCB MOTOR SUPPLY FAIL	F9	EMERGENCY TRIP OPERATED
F2	GCB POLE DISCREPANCY	F10	DC SOURCE-I FAIL
F3	GCB SPRING CHARGED	F11	DC SOURCE-II FAIL
F4	DS/ES/HES OPERATION INCOMPLETE	F12	GCB TRIP-1 CKT. MCB OFF/TRIP
F5	DS/ES/HES MOTOR O/L & CKT TROUBLE	F13	GCB TRIP-2 CKT. MCB OFF/TRIP
F6	220V DC CONTROL SUPPLY MCB OFF/TRIP	F14	MB-A VT CORE-1 MCB OFF/TRIP
F7	S43RL SELECTOR SWITCH IN LOCAL	F15	MB-A VT CORE-2 MCB OFF/TRIP
F8	S43RL SELECTOR SWITCH IN REMOTE	F16	MB-A VT CORE-3 MCB OFF/TRIP

TEST · MUTE · ACK. · RST.

MBAS 11 ALARM ANNUNCIATOR

ANN6

F1	MB-B VT CORE-1 MCB OFF/TRIP	F9	SPARE
F2	MB-B VT CORE-2 MCB OFF/TRIP	F10	SPARE
F3	MB-B VT CORE-3 MCB OFF/TRIP	F11	SPARE
F4	SPARE	F12	SPARE
F5	SPARE	F13	SPARE
F6	SPARE	F14	SPARE
F7	SPARE	F15	SPARE
F8	SPARE	F16	SPARE

TEST · MUTE · ACK. · RST.

MBAS 11 ALARM ANNUNCIATOR

BHEL Transmission Business Group Industry Sector Noida-01

REV	DETAILS OF MODIFICATION	DATE	REV.MARK	MODIFIED	CHECKED	APPROVED
02	AS PER CUST.COMMENT	23.05.2024	SIGN / NAME			
01	AS PER CUST.COMMENT	18.05.2024	SIGN / NAME			
00	FIRST ISSUE	06.02.2024	SIGN / NAME			

TOSHIBA
TRANSMISSION & DISTRIBUTION SYSTEMS (INDIA) PRIVATE LIMITED
SWITCHGEAR PRODUCTS DIVISION

CLIENT : ODISHA POWER TRANSMISSION CO.LTD.
PROJECT : 400/220kV GIS S.S AT ERSAMA, ODISHA & 400kV AIS FEEDER BAY EXTENSION AT DUBURI, ODISHA
CUSTOMER DRAWING NO. : TB-420-516-071-10A

PAGE DESCRIPTION : ANNUNCIATOR DESCRIPTION

BAY NAME : GA, INTERNAL ARRANGEMENT & SCHEMATICS OF LCP FOR 220KV BUS COUPLER & 220KV BUS PT-(D04&D05)
DRAWING NO. : DEEUGBI69513004

	NAME	SIGN	DATE
APPROVED	K.IKEDA	K.I	02.02.2024
CHECKED	M.SREEDHAR	M.S	02.02.2024
DRAWN	K.MAHESH	K.M	01.02.2024
DESIGN	SRIDEVI.Y	S.Y	11.01.2024

SCALE : NTS
REV : 02
PAGE 17
117 PAGES

571089/2024/TBG-TB_ENGG_PA

FORMAT NO. : SG 07 3 04 R0

ALL DIMENSIONS ARE IN MM & WEIGHTS ARE IN kg PER UNIT
UNLESS OTHER WISE, SPECIFIED.

REFERENCE: - .....

ALL INFORMATION CONTAINED IN THIS DOCUMENT IS CONFIDENTIAL AND THE PROPERTY OF TOSHIBA TRANSMISSION & DISTRIBUTION SYSTEMS (INDIA) PRIVATE LIMITED. REPRODUCTION OF THIS IN ANY FORM IS TO BE DONE WITH THE SPECIFIC PERMISSION OF THE ORGANISATION.

COVER SHEET

REV	DETAILS OF MODIFICATION	REV. MARK	DATE		MODIFIED	CHECKED	APPROVED
01	AS PER CUSTOMER COMMENTS		18.05.2024	SIGN	K.M	M.S	K.I
				NAME	K. MAHESH	M. SREEDHAR	K. IKEDA
00	FIRST ISSUE		06.02.2024	SIGN	K.M	M.S	K.I
				NAME	K. MAHESH	M. SREEDHAR	K. IKEDA

TOSHIBA
TOSHIBA TRANSMISSION & DISTRIBUTION SYSTEMS (INDIA) PRIVATE LIMITED

	NAME	SIGN	DATE
DESIGNED	SRIDEVI.Y		11.01.2024
DRAWN	K. MAHESH		03.02.2024
CHECKED	M.SREEDHAR		05.02.2024
APPROVED	K.IKEDA		06.02.2024

SCALE: 1:1 | SWITCHGEAR PRODUCTS DIVISION | PRODUCT: 245kV GIS

TITLE: GA, INTERNAL ARRANGEMENT & SCHEMATICS OF LCP FOR 220KV ICT-2 & BUS SECTION (D08&D09)

DRAWING NO.: DEEUGBI69513007

SHEET NO: 01 OF 114 REV: 01

PROJECT: 400/220kV GIS SUBSTION AT ERSAMA, ODISHA & 400kV AIS FEEDER BAY EXTENSION AT DUBURI, ODISHA

OWNER: **ODISHA POWER TRANSMISSION CORPORATION LIMITED**

QBTGM: BHARAT HEAVY ELECTRICALS LTD
TRANSMISSION BUSINESS GROUP NOIDA

DEPT CODE		NAME	SIGN	DATE
M	DRN			
	CHD			
	APPD			

TITLE: GA, INTERNAL ARRANGEMENT & SCHEMATICS OF LCP FOR 220KV ICT-2 & BUS SECTION (D08&D09)

DEPT. | SCALE | DRAWING NO. TB-420-516-071-10A
SIGN
DATE
SHEET 01 OF 114 | REV. 01

CHECKED: A.G.M (Elect), ENGG. & QUALITY, OPTCL, BHUBANESWAR

APPROVED: Sr. G.M. (Elect), ENGG. & QUALITY, OPTCL, BHUBANESWAR

REV	DETAILS OF MODIFICATION	DATE	REV.MARK		MODIFIED	CHECKED	APPROVED
			△	SIGN			
				NAME			
01	AS PER CUST.COMMENTS	18.05.2024	△	SIGN			
				NAME			
00	FIRST ISSUE	06.02.2024	△	SIGN			
				NAME			

TOSHIBA
TRANSMISSION & DISTRIBUTION SYSTEMS (INDIA) PRIVATE LIMITED
SWITCHGEAR PRODUCTS DIVISION

CLIENT : ODISHA POWER TRANSMISSION CO.LTD.
PROJECT : 400/220kV GIS S.S AT ERSAMA, ODISHA & 400kV AIS FEEDER BAY EXTENSION AT DUBURI, ODISHA
CUSTOMER DRAWING NO. : TB-420-516-071-10A

PAGE DESCRIPTION : COVER SHEET

BAY NAME : GA, INTERNAL ARRANGEMENT & SCHEMATICS OF LCP FOR 220KV ICT-2 & BUS SECTION (D08&D09)

DRAWING NO. : DEEUGBI69513007

APPROVED	K.IKEDA	K.I	06.02.2024
CHECKED	M.SREEDHAR	M.S	05.02.2024
DRAWN	K.MAHESH	K.M	03.02.2024
DESIGN	SRIDEVI.Y	S.Y	11.01.2024
	NAME	SIGN	DATE

SCALE : NTS
REV : 01
PAGE 1
114 PAGES

571089/2024/TBG-TB_ENGG_PA

SHEET	DESIGNATION	REVISIONS							
1	COVER SHEET	00	01						
2	SUMMARY:	00	01						
3	GENERAL SPECIFICATION	00	01						
4	ELECTRICAL SYMBOLS	00	01						
5	SWITCH OPERATION SEQUENCES	00	01						
6	SINGLE LINE DIAGRAM	00	01						
7	GAS COMPARTMENT	00	01						
8	INTERLOCKING LOGIC-1	00	01						
9	INTERLOCKING LOGIC-2	00	01						
10	INTERLOCKING LOGIC-3	00	01						
11	INTERLOCKING LOGIC-4	00	01						
12	INTERLOCKING LOGIC-5	00	01						
13	INTERLOCKING LOGIC-6	00	01						
14	MIMIC	00	01						
15	OUTLINE OF LCP	00	01						
16	INTERNAL ARRANGEMENT OF LCP	00	01						
17	ANNUNCIATOR DESCRIPTION	00	01						
18	CT CIRCUIT-1	00	01						
19	CT CIRCUIT-2	00	01						
20	CT CIRCUIT-3	00	01						
21	DC CONTROL SOURCE	00	01						
22	AC CONTROL SOURCE	00	01						
23	MECHANISM'S HEATER CIRCUIT	00	01						
24	MULTIPLE OPERATION PREVENTION CIRCUIT	00	01						
25	GCB CLOSING AND ANTIPUMPING CIRCUIT	00	01						
26	GCB PHASE DISCREPANCY CIRCUIT - 1	00	01						
27	GCB PHASE DISCREPANCY CIRCUIT - 2	00	01						
28	GCB TRIP-1 CIRCUIT	00	01						
29	GCB TRIP-2 CIRCUIT	00	01						
30	GCB MOTOR CIRCUIT	00	01						
31	GCB MOTOR CONTROL CIRCUIT	00	01						
32	GCB CONTROL CIRCUIT	00	01						
33	GCB SPARE TERMINALS	00	01						
34	GCB SPARE & INDICATION CIRCUIT	00	01						
35	DS/ES CONTROL CIRCUIT (89A/89AE) - 1	00	01						
36	DS/ES CONTROL CIRCUIT (89A/89AE) - 2	00	01						
37	DS CONTROL CIRCUIT (89A)	00	01						
38	ES CONTROL CIRCUIT (89AE)	00	01						
39	DS CONTROL CIRCUIT (89B) - 1	00	01						
40	DS CONTROL CIRCUIT (89B)-2	00	01						
41	DS CONTROL CIRCUIT (89B)-3	00	01						
42	DS/ES CONTROL CIRCUIT (89T/89TE2) - 1	00	01						
43	DS/ES CONTROL CIRCUIT (89T/89TE2) - 2	00	01						
44	DS CONTROL CIRCUIT (89T)	00	01						
45	ES CONTROL CIRCUIT (89TE2)	00	01						
46	H-ES CONTROL CIRCUIT (89TE1)-1	00	01						
47	H-ES CONTROL CIRCUIT (89TE1)-2	00	01						
48	BUS SCTION DS CONTROL CIRCUIT (89A)-1	00	01						
49	BUS SCTION DS CONTROL CIRCUIT (89A)-2	00	01						
50	BUS SCTION DS CONTROL CIRCUIT (89A)-3	00	01						
51	BUS SCTION ES CONTROL CIRCUIT (89AE)-1	00	01						
52	BUS SCTION ES CONTROL CIRCUIT (89AE)-2	00	01						
53	BUS SCTION DS CONTROL CIRCUIT (89B)-1	00	01						
54	BUS SCTION DS CONTROL CIRCUIT (89B)-2	00	01						
55	BUS SCTION DS CONTROL CIRCUIT (89B)-3	00	01						
56	BUS SCTION ES CONTROL CIRCUIT (89BE)-1	00	01						
57	BUS SCTION ES CONTROL CIRCUIT (89BE)-2	00	01						
58	CONTROL SIGNAL CIRCUIT-1	00	01						
59	CONTROL SIGNAL CIRCUIT-2	00	01						
60	CONTROL SIGNAL CIRCUIT-3	00	01						
61	CONTROL SIGNAL CIRCUIT-4	00	01						
62	INDICATOR CIRCUIT-1	00	01						

SHEET	DESIGNATION	REVISIONS							
63	INDICATOR CIRCUIT-2	00	01						
64	INDICATOR CIRCUIT-3	00	01						
65	INTERLOCK CIRCUIT-1	00	01						
66	INTERLOCK CIRCUIT-2	00	01						
67	INTERLOCK CIRCUIT-3	00	01						
68	BAY TO BAY INTERLOCKING CIRCUIT -1	00	01						
69	BAY TO BAY INTERLOCKING CIRCUIT -2	00	01						
70	GAS PRESSURE SENSOR CIRCUIT-1	00	01						
71	GAS PRESSURE SENSOR CIRCUIT-2	00	01						
72	GAS PRESSURE SENSOR CIRCUIT-3	00	01						
73	GAS PRESSURE SENSOR CIRCUIT-4	00	01						
74	GAS PRESSURE SENSOR CIRCUIT-5	00	01						
75	GAS PRESSURE SENSOR CIRCUIT-6	00	01						
76	GAS MONITORING CIRCUIT-1	00	01						
77	GAS MONITORING CIRCUIT-2	00	01						
78	GAS MONITORING CIRCUIT-3	00	01						
79	GAS MONITORING CIRCUIT-4	00	01						
80	GAS MONITORING CIRCUIT-5	00	01						
81	GAS MONITORING CIRCUIT-6	00	01						
82	GAS MONITORING CIRCUIT-7	00	01						
83	GAS MONITORING CIRCUIT-8	00	01						
84	GAS MONITORING CIRCUIT-9	00	01						
85	GAS MONITORING CIRCUIT-10	00	01						
86	ANNUNCIATOR CIRCUIT-1	00	01						
87	ANNUNCIATOR CIRCUIT-2	00	01						
88	ANNUNCIATOR CIRCUIT-3	00	01						
89	ANNUNCIATOR CIRCUIT- 4	00	01						
90	ANNUNCIATOR CIRCUIT- 5	00	01						
91	ANNUNCIATOR CIRCUIT- 6	00	01						
92	ANNUNCIATOR CIRCUIT- 7	00	01						
93	ANNUNCIATOR CIRCUIT- 8	00	01						
94	ANNUNCIATOR CIRCUIT- 9	00	01						
95	ANNUNCIATOR CIRCUIT- 10	00	01						
96	ANNUNCIATOR CIRCUIT- 11	00	01						
97	ANNUNCIATOR CIRCUIT- 12	00	01						
98	SIGNAL INTERFACE-1	00	01						
99	SIGNAL INTERFACE-2	00	01						
100	SIGNAL INTERFACE-3	00	01						
101	SIGNAL INTERFACE-4	00	01						
102	PARTS LIST : MINILEC.MBAS 11_16WINDOWS, 220V DC - ABB.CA4-13M	00	01						
103	PARTS LIST : OMR.MM4XP+14PFA-220V DC - SIE.3RH2122-1BM40	00	01						
104	PARTS LIST : SIE.3RH2911-1HA04 - SIEM.3RT2024-1BM40	00	01						
105	PARTS LIST : SIE.3RH2140-1BM40 - OMR.MY4N-GS+PYF14A-N, 220V DC	00	01						
106	PARTS LIST : OMR.PYC-A1 - OMR.MY4N-GS+PYF14A-N, 220V DC	00	01						
107	PARTS LIST : OMR.PYC-A1 - PXC.MALE + FEMALE INSERT 46PIN	00	01						
108	PARTS LIST : PXC.GUIDE PIN + GUIDE BUSH - 46PIN(1) - ABB.CR-M220DC4_220V DC	00	01						
109	PARTS LIST : ABB.CR-M4SS - CON.WELL.CA702	00	01						
110	PARTS LIST : CON.WELL.EP2.5/4UN - CON.WELL_GMH6	00	01						
111	PARTS LIST : CON.WELL.CTS4UN - CON.WELL_EP2.5/4UN (END COVER)	00	01						
112	CABLE OVERVIEW : =DEEUGBI69513007_SCHEMATICS+-WCTB1 - =DEEUGBI69513007_SCHEMATICS+-WG209-8R	00	01						
113	CABLE OVERVIEW : =DEEUGBI69513007_SCHEMATICS+-WG209-1Y - =DEEUGBI69513007_SCHEMATICS+-WGS209-6R	00	01						
114	CABLE OVERVIEW : =DEEUGBI69513007_SCHEMATICS+-WGS209-7R - =DEEUGBI69513007_SCHEMATICS+-WQ26X3	00	01						

CHECKED — A.G.M (Elect) — OPTCL, BHUBANESWAR

APPROVED — Sr. G.M. (Elect) — OPTCL, BHUBANESWAR

FORMAT NO. : SG 07 3 04 R0

ALL DIMENSIONS ARE IN MM & WEIGHTS ARE IN kg PER UNIT UNLESS OTHER WISE, SPECIFIED.

REFERENCE: - .....

ALL INFORMATION CONTAINED IN THIS DOCUMENT IS CONFIDENTIAL AND THE PROPERTY OF TOSHIBA TRANSMISSION & DISTRIBUTION SYSTEMS (INDIA) PRIVATE LIMITED. REPRODUCTION OF THIS IN ANY FORM IS TO BE DONE WITH THE SPECIFIC PERMISSION OF THE ORGANISATION.

REV	DETAILS OF MODIFICATION	DATE	REV.MARK	MODIFIED	CHECKED	APPROVED
01	AS PER CUST.COMMENTS	18.05.2024				
00	FIRST ISSUE	06.02.2024				

TOSHIBA
TRANSMISSION & DISTRIBUTION SYSTEMS (INDIA) PRIVATE LIMITED
SWITCHGEAR PRODUCTS DIVISION

CLIENT : ODISHA POWER TRANSMISSION CO.LTD.
PROJECT : 400/220kV GIS S.S AT ERSAMA, ODISHA & 400kV AIS FEEDER BAY EXTENSION AT DUBURI, ODISHA
CUSTOMER DRAWING NO. : TB-420-516-071-10A

PAGE DESCRIPTION : SUMMARY:

BAY NAME : GA, INTERNAL ARRANGEMENT & SCHEMATICS OF LCP FOR 220KV ICT-2 & BUS SECTION (D08&D09)

DRAWING NO. : DEEUGBI69513007

	NAME	SIGN	DATE
APPROVED	K.IKEDA	K.I	06.02.2024
CHECKED	M.SREEDHAR	M.S	05.02.2024
DRAWN	K.MAHESH	K.M	03.02.2024
DESIGN	SRIDEVI.Y	S.Y	11.01.2024

SCALE : NTS
REV : 01
PAGE 2 / 114 PAGES

1. INTERNAL WIRE SIZE & COLORING

S.NO.	KIND OF CIRCUIT	WIRE TYPE	WIRE SIZE (MIN)	COLORING
1	GCB MOTOR & CONTROL CKT	PVC INSULATED FRLS	2.5 SQ.MM	GREY
2	DS/ES MOTOR CKT	PVC INSULATED FRLS	2.5 SQ.MM	
3	ANNUNCIATOR	PVC INSULATED FRLS	2.5 SQ.MM	
4	DC CONTROL CIRCUITS	PVC INSULATED FRLS	2.5 SQ.MM	
5	POWER SUPPLY CKT	PVC INSULATED FRLS	2.5 SQ.MM	
6	AC CONTROL CIRCUITS	PVC INSULATED FRLS	2.5 SQ.MM	BLACK
7	CT SECONDARY	PVC INSULATED FRLS	4 SQ.MM	RED,YELLOW,BLUE FOR PHASES BLACK FOR NEUTRAL
8	VT SECONDARY	PVC INSULATED FRLS	4 SQ.MM	
9	GROUND(EARTH)	PVC INSULATED FRLS	4.0 SQ.MM	GREEN/YELLOW

2. WIRING SYSTEM

DUCT SYSTEM

3. RED FERRULE WITH WHITE TEXT FOR TRIP CIRCUIT

4. INTERNAL WIRE CROSS REFERENCE FERRULING METHOD

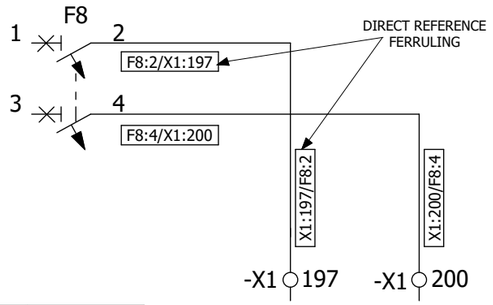

5. IDENTIFICATION OF THE VOLTAGES

INDICATION	DESCRIPTION	RATING
P/N	POSITIVE/NEGATIVE POLE	220V DC
PH /NH	AC VOLTAGE PHASE	230V AC
PT1/NT1	CIRCUIT BREAKER TRIP CIRCUIT -1	220V DC
PT2/NT2	CIRCUIT BREAKER TRIP CIRCUIT -2	220V DC
PC1/NC1	CIRCUIT BREAKER CONTROL CIRCUIT	220V DC
PM0/NM0	CIRCUIT BREAKER MOTOR CIRCUIT	220V DC
PM1/NM1	DS/ES/HES MOTOR CIRCUIT	220V DC
PC2/NC2	DS/ES/HES STATUS MOINITORING & INTERLOCKING CIRCUIT	220V DC
PA1/NA1	INDICATION, GAS MONITORING & ANNUNCIATION CIRCUIT	220V DC
PPS/NPS	GAS PRESSURE SENSOR MONITORING CIRCUIT	220V DC

6. DETAIL OF WIRING

(1) INSULATED RING TYPE COMPRESSED TERMINAL CABLE/WIRE LUG(CT, VT, EARTHING)

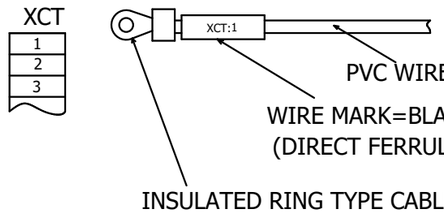

(2) INSULATED PIN TYPE COMPRESSED TERMINAL CABLE/WIRE LUG (CONTACTOR, MCB,TERMINAL BLOCKS & ANNUNCIATOR)

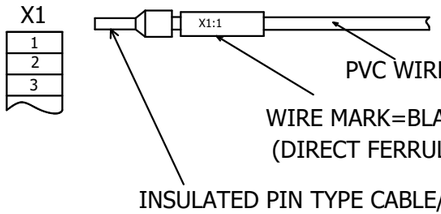

(3)INSULATED FASTON TYPE COMPRESSED TERMINALCABLE/WIRE LUG (AUXILIARY RELAY BOX ETC. WIRING)

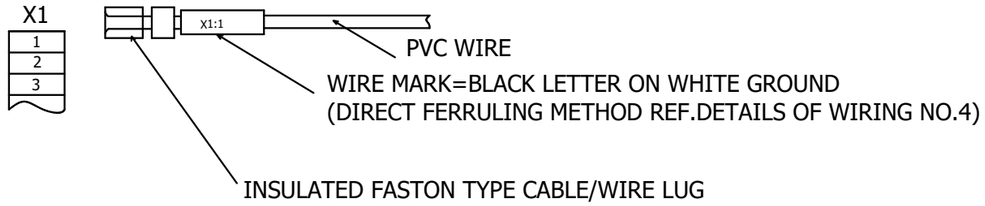

(4)INSULATED FORK TYPE TERMINAL CABLE/WIRE LUG (OMRON RELAY WIRING)

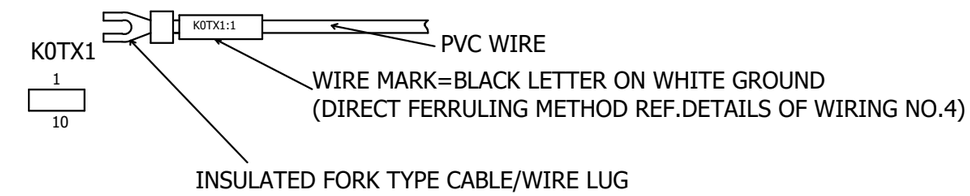

(5) INSERTION OF WIRE MARK (EX. COMPRESSED TERMINAL)

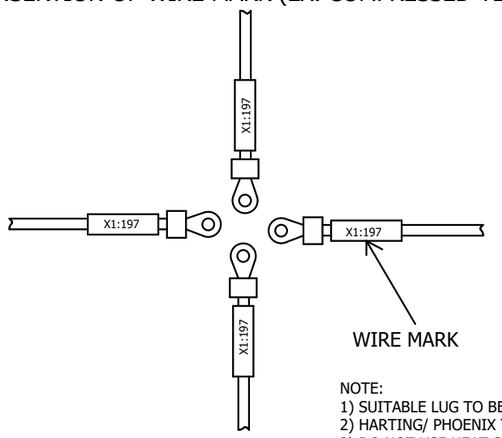

NOTE:
1) SUITABLE LUG TO BE USED FOR OTHER COMPONENTS LIKE BCU, PM, AUXILIARY RELAY BOX, ETC..,
2) HARTING/ PHOENIX TO BE PROVIDED SINGLE ENTRY OF CABLE.
3) DO NOT USE HEAT SHRINKABLE LUGS

CHECKED — A.G.M (Elect) ENGG. & QUALITY OPTCL, BHUBANESWAR

APPROVED — Sr. G.M. (Elect) ENGG. & QUALITY OPTCL, BHUBANESWAR

FORMAT NO. : SG 07 3 04 R0

ALL DIMENSIONS ARE IN MM & WEIGHTS ARE IN kg PER UNIT UNLESS OTHER WISE, SPECIFIED.

REFERENCE: - .....

ALL INFORMATION CONTAINED IN THIS DOCUMENT IS CONFIDENTIAL AND THE PROPERTY OF TOSHIBA TRANSMISSION & DISTRIBUTION SYSTEMS (INDIA) PRIVATE LIMITED. REPRODUCTION OF THIS IN ANY FORM IS TO BE DONE WITH THE SPECIFIC PERMISSION OF THE ORGANISATION.

REV	DETAILS OF MODIFICATION	DATE	REV.MARK	MODIFIED	CHECKED	APPROVED
01	AS PER CUST.COMMENTS	18.05.2024	SIGN / NAME			
00	FIRST ISSUE	06.02.2024	SIGN / NAME			

TOSHIBA
TRANSMISSION & DISTRIBUTION SYSTEMS (INDIA) PRIVATE LIMITED
SWITCHGEAR PRODUCTS DIVISION

CLIENT : ODISHA POWER TRANSMISSION CO.LTD.
PROJECT : 400/220kV GIS S.S AT ERSAMA, ODISHA & 400kV AIS FEEDER BAY EXTENSION AT DUBURI, ODISHA
CUSTOMER DRAWING NO. : TB-420-516-071-10A

PAGE DESCRIPTION : GENERAL SPECIFICATION

BAY NAME : GA, INTERNAL ARRANGEMENT & SCHEMATICS OF LCP FOR 220KV ICT-2 & BUS SECTION (D08&D09)

DRAWING NO. : DEEUGBI69513007

APPROVED	K.IKEDA	K.I	06.02.2024
CHECKED	M.SREEDHAR	M.S	05.02.2024
DRAWN	K.MAHESH	K.M	03.02.2024
DESIGN	SRIDEVI.Y	S.Y	11.01.2024
	NAME	SIGN	DATE

SCALE : NTS
REV : 01
PAGE 3 114 PAGES

SYMBOL	DESCRIPTION	SYMBOL	DESCRIPTION	SYMBOL	DESCRIPTION
	MAKE CONTACT		THERMAL OVERLOAD RELAY		CIRCUIT BREAKER
	BREAK CONTACT		HEATER		DISCONNECTOR SWITCH
	CHANGE -OVER CONTACT		VOLTAGE TRANSFORMER		CURRENT TRANSFORMER
	MINIATURE CIRCUIT BREAKER, SINGLE POLE		SWITCH, NO CONTACT, OPERATED BY TURNING SWITCH, NC CONTACT, OPERATED BY TURNING		FLUORESCENT LAMP
	THERMOSTAT & HUMIDISTAT		PUSHBUTTON, NO CONTACT, OPERATED BY PUSHING PUSHBUTTON, NC CONTACT, OPERATED BY PUSHING		DISCONNECT TERMINAL BLOCK
	LAMP, INDICATOR LIGHT		PUSHBUTTON, NO CONTACT, OPERATED BY TURNING PUSHBUTTON, NC CONTACT, OPERATED BY TURNING		RETURN ARROW
	RESISTER		DIODE		NC CONTACT, DOOR SWITCH
	RECEPTACLE WITH PE, THREE POLE		POWER NO CONTACT OF A CONTACTOR		SWITCH, NO CONTACT, OPERATED BY TURNING , 3 SW.POSITION SWITCH, NC CONTACT, OPERATED BY TURNING , 3 SW.POSITION
	RECEPTACLE WITH PE, THREE POLE & SWITCH		NO CONTACT LEADING NC CONTACT LATE BREAK		SWITCH, NO CONTACT, OPERATED BY TURNING , 4 SW.POSITION SWITCH, NC CONTACT, OPERATED BY TURNING , 4 SW.POSITION
	TERMINAL BLOCK		SWITCH, CHANGE -OVER CONTACT, OPERATED BY TURNING		SWITCH, NO CONTACT, OPERATED BY TURNING , 2 SW.POSITION SWITCH, NC CONTACT, OPERATED BY TURNING , 2 SW.POSITION
	RELAY / CONTACTOR	A	AMMETER		OFF DELAY TIMER
	TIMER (ON DELAY TIMER)	V	VOLTMETER		CONDENSER
	SWITCH, NO CONTACT, OPERATED BY PUSHING SWITCH, NC CONTACT, OPERATED BY PUSHING	W	WATTMETER	SET RESET	LATCHING RELAY
	FEMALE/MALE PIN WITH PLUG		BCU - CHANNEL		DISCREPANCY LAMP
	NO CONTACT, WITH DELAYED CLOSING NC CONTACT, WITH DELAYED OPENING		CHANGE -OVER CONTACT, WITH DROP OUT DELAY		
	DIODE TERMINAL BLOCK		CHANGE -OVER CONTACT, WITH PICK-UP DELAY	OPEN CLOSED	DISCONNECTOR / EARTHING
	LIMIT SWITCH, NO CONTACT LIMIT SWITCH, NC CONTACT		LIGHT -EMITTING DIODE (LED), GENERAL		POSITION INDICATION LIGHT CROSS WITH LED
	HORN		EARTHING	OPEN CLOSED	CIRCUIT BREAKER POSITION INDICATION LIGHT CROSS WITH LED
	DC MOTOR		AC MOTOR		

BHEL, Transmission Business Group, Industry Sector, Noida-01
(ANIL KUMAR)
MANAGER/BHEL-TBG

CHECKED
A.G.M (Elect)
ENGG. & QUALITY
OPTCL, BHUBANESWAR

APPROVED
Sr. G.M. (Elect)
ENGG. & QUALITY
OPTCL, BHUBANESWAR

FORMAT NO. : SG 07 3 04 R0

ALL DIMENSIONS ARE IN MM & WEIGHTS ARE IN kg PER UNIT
UNLESS OTHER WISE, SPECIFIED.

REFERENCE: - .....

ALL INFORMATION CONTAINED IN THIS DOCUMENT IS CONFIDENTIAL AND THE PROPERTY OF TOSHIBA TRANSMISSION & DISTRIBUTION SYSTEMS (INDIA) PRIVATE LIMITED. REPRODUCTION OF THIS IN ANY FORM IS TO BE DONE WITH THE SPECIFIC PERMISSION OF THE ORGANISATION.

REV	DETAILS OF MODIFICATION	DATE	REV.MARK	MODIFIED	CHECKED	APPROVED
01	AS PER CUST.COMMENTS	18.05.2024	SIGN / NAME			
00	FIRST ISSUE	06.02.2024	SIGN / NAME			

TOSHIBA
TRANSMISSION & DISTRIBUTION SYSTEMS (INDIA) PRIVATE LIMITED
SWITCHGEAR PRODUCTS DIVISION

CLIENT : ODISHA POWER TRANSMISSION CO.LTD.
PROJECT : 400/220kV GIS S.S AT ERSAMA, ODISHA & 400kV AIS FEEDER BAY EXTENSION AT DUBURI, ODISHA
CUSTOMER DRAWING NO. : TB-420-516-071-10A

PAGE DESCRIPTION : ELECTRICAL SYMBOLS

BAY NAME : GA, INTERNAL ARRANGEMENT & SCHEMATICS OF LCP FOR 220KV ICT-2 & BUS SECTION (D08&D09)
DRAWING NO. : DEEUGBI69513007

APPROVED	K.IKEDA	K.I	06.02.2024
CHECKED	M.SREEDHAR	M.S	05.02.2024
DRAWN	K.MAHESH	K.M	03.02.2024
DESIGN	SRIDEVI.Y	S.Y	11.01.2024
	NAME	SIGN	DATE

SCALE : NTS
REV : 01
PAGE 4 114 PAGES

FORMAT NO. : SG 07 3 04 R0

ALL DIMENSIONS ARE IN MM & WEIGHTS ARE IN kg PER UNIT
UNLESS OTHER WISE, SPECIFIED.

REFERENCE: - .....

ALL INFORMATION CONTAINED IN THIS DOCUMENT IS CONFIDENTIAL AND THE PROPERTY OF TOSHIBA TRANSMISSION & DISTRIBUTION SYSTEMS (INDIA) PRIVATE LIMITED. REPRODUCTION OF THIS IN ANY FORM IS TO BE DONE WITH THE SPECIFIC PERMISSION OF THE ORGANISATION.

SWITCHES

SHUTTER SWITCH - SS

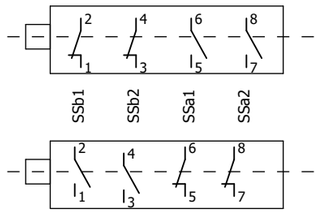

EXPLANATION OF CONTACTS TABLE

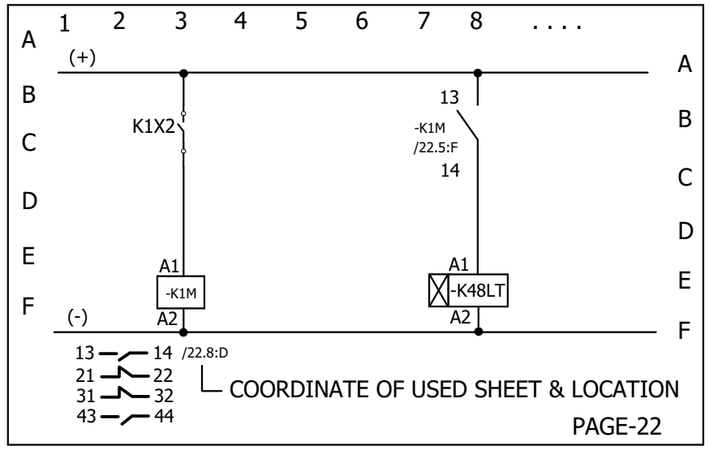

LETTER CODE OF THE DIFFERENT ITEMS

INDICATION	DESCRIPTION
A	ANNUNCIATOR
B	BCU/THERMOSTAT/HUMIDISTAT
E	HEATER/CUBICLE LIGHT/EMER.PUSH BUTTON/RECEP
F	PROTECTIVE DEVICES
K	RELAYS, CONTACTORS & TIMERS
P	POWER METER
S	SWITCHES
T	TRANSFORMERS
W	CONTROL CABLES
X	TERMINALS & PLUGS
Q	HIGH VOLTAGE DEVICES
H	INDICATOR

3 POSITION MOMENTARY SWITCH

3 POSITION MOMENTARY SW. FOR H.V
APPARATUS SELECTION SPRING RETURN TO "0" POSITION

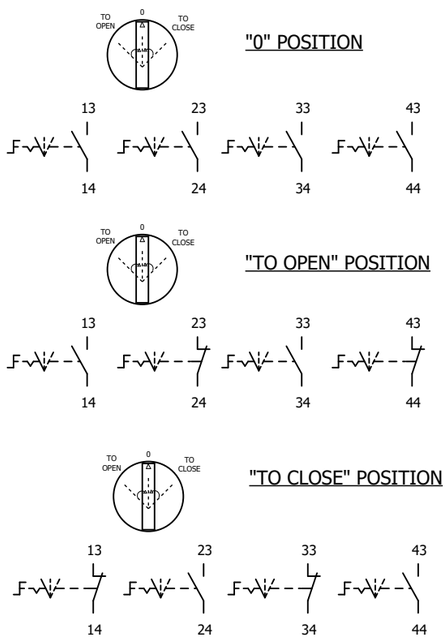

EXPLANATION OF TERMINAL DIAGRAM

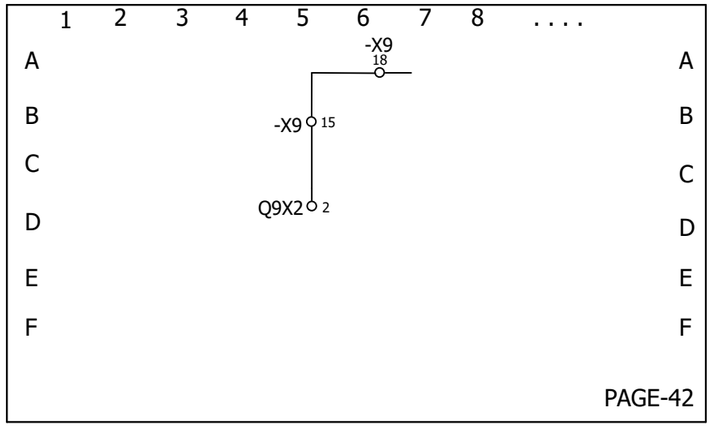

(FROM)
INTERNAL
TARGET

X9 15

EXTERNAL
TARGET
(TO)

INTERNAL TARGET		X9	EXTERNAL TARGET	
X9-18	42.6:A	15	Q9X1-2	42.5.A

CHECKED
A.G.M (Elect)
ENGG. & QUALITY
OPTCL, BHUBANESWAR

APPROVED
Sr. G.M. (Elect)
ENGG. & QUALITY
OPTCL, BHUBANESWAR

REV	DETAILS OF MODIFICATION	DATE	REV.MARK	MODIFIED	CHECKED	APPROVED
01	AS PER CUST.COMMENTS	18.05.2024	SIGN / NAME			
00	FIRST ISSUE	06.02.2024	SIGN / NAME			

TOSHIBA
TRANSMISSION & DISTRIBUTION SYSTEMS (INDIA) PRIVATE LIMITED
SWITCHGEAR PRODUCTS DIVISION

CLIENT : ODISHA POWER TRANSMISSION CO.LTD.
PROJECT : 400/220kV GIS S.S AT ERSAMA, ODISHA & 400kV AIS FEEDER BAY EXTENSION AT DUBURI, ODISHA
CUSTOMER DRAWING NO. : TB-420-516-071-10A

PAGE DESCRIPTION : SWITCH OPERATION SEQUENCES

BAY NAME : GA, INTERNAL ARRANGEMENT & SCHEMATICS OF LCP FOR 220KV ICT-2 & BUS SECTION (D08&D09)
DRAWING NO. : DEEUGBI69513007

APPROVED	K.IKEDA	K.I	06.02.2024
CHECKED	M.SREEDHAR	M.S	05.02.2024
DRAWN	K.MAHESH	K.M	03.02.2024
DESIGN	SRIDEVI.Y	S.Y	11.01.2024
	NAME	SIGN	DATE

SCALE : NTS
REV : 01
PAGE 5
114 PAGES

FORMAT NO. : SG 07 3 04 R0

ALL DIMENSIONS ARE IN MM & WEIGHTS ARE IN kg PER UNIT
UNLESS OTHER WISE, SPECIFIED.

REFERENCE: - .....

ALL INFORMATION CONTAINED IN THIS DOCUMENT IS CONFIDENTIAL AND THE PROPERTY OF TOSHIBA TRANSMISSION & DISTRIBUTION SYSTEMS (INDIA) PRIVATE LIMITED. REPRODUCTION OF THIS IN ANY FORM IS TO BE DONE WITH THE SPECIFIC PERMISSION OF THE ORGANISATION.

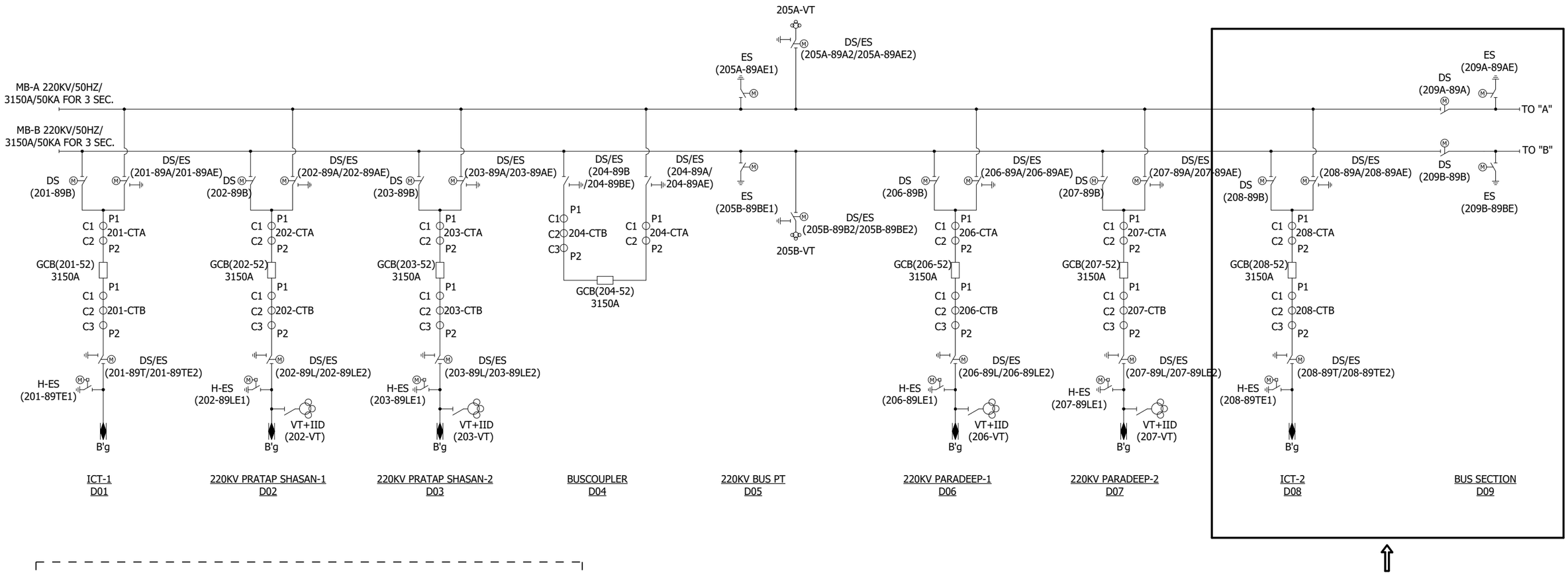

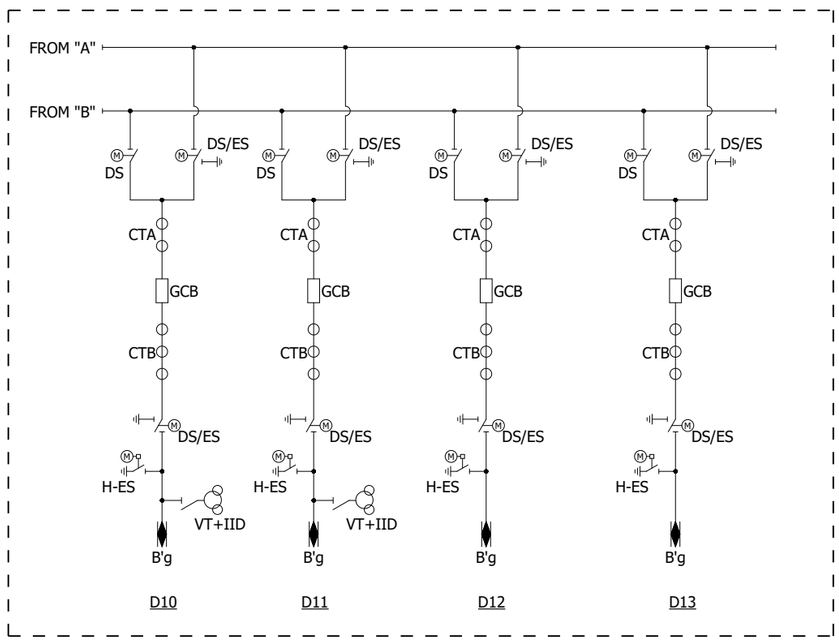

BHEL Transmission Business Group Industry Sector Noida-01

(ANUTEEJ KUMAR)
MANAGER/BHEL-TBG

CHECKED
A.G.M (Elect)
ENGG. & QUALITY
OPTCL, BHUBANESWAR

APPROVED
Sr. G.M. (Elect)
ENGG. & QUALITY
OPTCL, BHUBANESWAR

REV	DETAILS OF MODIFICATION	DATE	REV.MARK	MODIFIED	CHECKED	APPROVED
01	AS PER CUST.COMMENTS	18.05.2024	△			
00	FIRST ISSUE	06.02.2024	△			

SIGN / NAME

TOSHIBA
TRANSMISSION & DISTRIBUTION SYSTEMS (INDIA) PRIVATE LIMITED
SWITCHGEAR PRODUCTS DIVISION

CLIENT : ODISHA POWER TRANSMISSION CO.LTD.
PROJECT : 400/220kV GIS S.S AT ERSAMA, ODISHA & 400kV AIS FEEDER BAY EXTENSION AT DUBURI, ODISHA
CUSTOMER DRAWING NO. : TB-420-516-071-10A

PAGE DESCRIPTION : SINGLE LINE DIAGRAM

BAY NAME : GA, INTERNAL ARRANGEMENT & SCHEMATICS OF LCP FOR 220KV ICT-2 & BUS SECTION (D08&D09)

DRAWING NO. : DEEUGBI69513007

	NAME	SIGN	DATE
APPROVED	K.IKEDA	K.I	06.02.2024
CHECKED	M.SREEDHAR	M.S	05.02.2024
DRAWN	K.MAHESH	K.M	03.02.2024
DESIGN	SRIDEVI.Y	S.Y	11.01.2024

SCALE : NTS
REV : 01
PAGE 6 114 PAGES

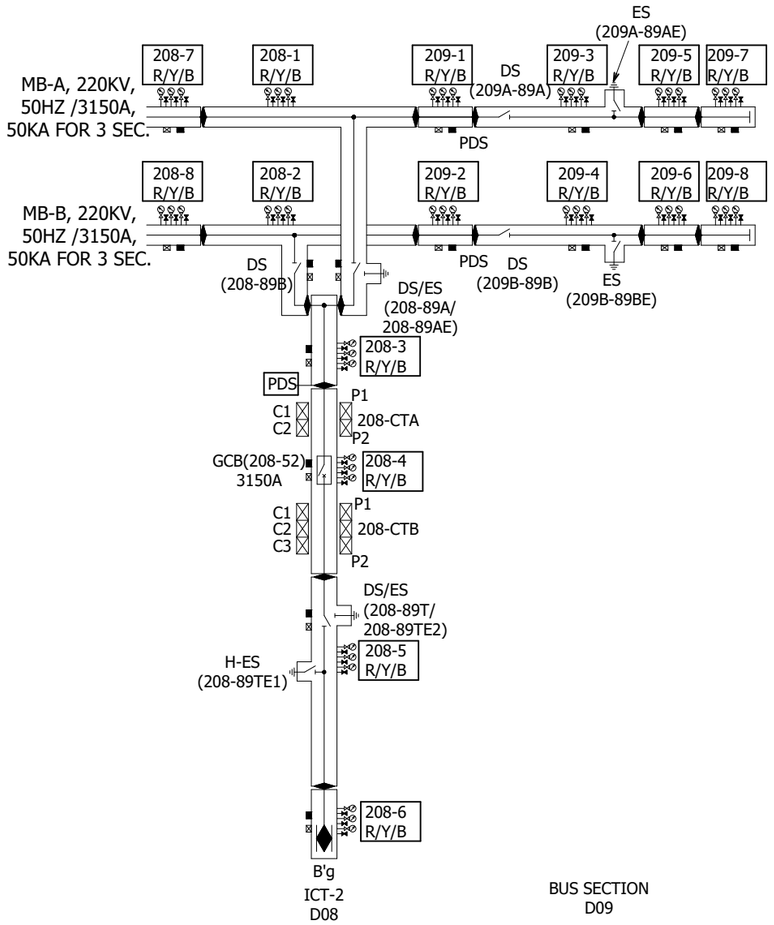

HIGH VOLTAGE DEVICES

TOSHIBA'S NAME	DESIGNATION
GCB (52)	GAS CIRCUIT BREAKER
DS(89A)	MB-A SIDE DISCONNECTOR SWITCH
DS(89B)	MB-B SIDE DISCONNECTOR SWITCH
ES(89AE)	MB-A SIDE EARTHING SWITCH
DS(89T)	ICT SIDE DISCONNECTOR SWITCH
ES(89TE2)	ICT SIDE EARTHING SWITCH
HES(89TE1)	ICT SIDE HIGH SPEED EARTH SWITCH
DS(BS-89A)	MB-A BUS SECTION DISCONNECTOR SWITCH
DS(BS-89B)	MB-B BUS SECTION DISCONNECTOR SWITCH
ES(BS-89AE)	MB-A BUS SECTION EARTHING SWITCH
ES(BS-89BE)	MB-B BUS SECTION EARTHING SWITCH
CT	CURRENT TRANSFORMER
208-1R/Y/B	MB-A DS GAS COMPARTMENT
208-2R/Y/B	MB-B DS GAS COMPARTMENT
208-3R/Y/B	BUFFER GAS COMPARTMENT
208-4R/Y/B	CIRCUIT BREAKER GAS COMPARTMENT
208-5R/Y/B	ICT SIDE GAS COMPARTMENT
208-6R/Y/B	SF6 TO AIR BUSHING SIDE GAS COMPARTMENT
208-7R/Y/B	MB-A DS GAS COMPARTMENT
208-8R/Y/B	MB-B DS GAS COMPARTMENT
209-1R/Y/B	BUFFER GAS COMPARTMENT
209-2R/Y/B	CIRCUIT BREAKER GAS COMPARTMENT
209-3R/Y/B	ICT SIDE GAS COMPARTMENT
209-4R/Y/B	SF6 TO AIR BUSHING SIDE GAS COMPARTMENT
209-5R/Y/B	BUFFER GAS COMPARTMENT
209-6R/Y/B	CIRCUIT BREAKER GAS COMPARTMENT
209-7R/Y/B	ICT SIDE GAS COMPARTMENT
209-8R/Y/B	SF6 TO AIR BUSHING SIDE GAS COMPARTMENT

LEGEND:

SYMBOL/ ABBREVIATION	EQUIPMENT NAME	OPERATION METHOD
GCB	GAS INSULATED CIRCUIT BREAKER	MOTOR CHARGED SPRING OPERATION
DS/ES	DISCONNECTOR WITH EARTHING SWITCH	MOTOR OPERATION
DS	DISCONNECTOR	MOTOR OPERATION
ES	EARTHING SWITCH	MOTOR OPERATION
H-ES	HIGH SPEED EARTHING SWITCH	MOTOR CHARGED SPRING OPERATION
CT	CURRENT TRANSFORMER	
VT+IID	VOLTAGE TRANSFORMER WITH INTEGRATED ISOLATING DEVICE (MANUAL OPERATION)	
VT	VOLTAGE TRANSFORMER	
	DN-8 VALVE FOR GAS DENSITY MONITOR	
	DN-20 VALVE FOR GAS HANDLING	
	GAS TIGHT SPACER	
	RUPTURE DISC	
	ADSORBENT	
MB-A&B	MAIN BUS-A&B	
PDS	PARTIAL DISCHARGE SENSOR	

SETTING VALUE OF GAS MONITOR:

COMPONENT	SETTING VALUE OF PRESSURE SWITCH	RATED PRESSURE (abs)
GCB	FIRST LOW PRESSURE ALARM : 6.70 bar. abs at 20°C SECOND LOW PRESSURE ALARM: 6.40 bar. abs at 20°C (BLOCKING PRESSURE) GUARANTEE LIWL: 1050kVp	7.0 bar at 20°C
OTHERS	FIRST LOW PRESSURE ALARM : 6.70 bar. abs at 20°C SECOND LOW PRESSURE ALARM: 6.40 bar. abs at 20°C GUARANTEE LIWL: 1050kVp	7.0 bar at 20°C

BHEL Transmission Business Group Industry Sector Noida-01

(ANUJ KUMAR) MANAGER/ELECT. TDS

CHECKED
A.G.M (Elect)
ENGG. & QUALITY
OPTCL, BHUBANESWAR

APPROVED
Sr. G.M. (Elect)
ENGG. & QUALITY
OPTCL, BHUBANESWAR

FORMAT NO. : SG 07 3 04 R0

ALL DIMENSIONS ARE IN MM & WEIGHTS ARE IN kg PER UNIT UNLESS OTHER WISE, SPECIFIED.

REFERENCE: - .....

ALL INFORMATION CONTAINED IN THIS DOCUMENT IS CONFIDENTIAL AND THE PROPERTY OF TOSHIBA TRANSMISSION & DISTRIBUTION SYSTEMS (INDIA) PRIVATE LIMITED. REPRODUCTION OF THIS IN ANY FORM IS TO BE DONE WITH THE SPECIFIC PERMISSION OF THE ORGANISATION.

REV	DETAILS OF MODIFICATION	DATE	REV.MARK	MODIFIED	CHECKED	APPROVED
01	AS PER CUST.COMMENTS	18.05.2024	△ SIGN / NAME			
00	FIRST ISSUE	06.02.2024	△ SIGN / NAME			

TOSHIBA
TRANSMISSION & DISTRIBUTION SYSTEMS (INDIA) PRIVATE LIMITED
SWITCHGEAR PRODUCTS DIVISION

CLIENT : ODISHA POWER TRANSMISSION CO.LTD.
PROJECT : 400/220kV GIS S.S AT ERSAMA, ODISHA & 400kV AIS FEEDER BAY EXTENSION AT DUBURI, ODISHA
CUSTOMER DRAWING NO. : TB-420-516-071-10A

PAGE DESCRIPTION : GAS COMPARTMENT

BAY NAME : GA, INTERNAL ARRANGEMENT & SCHEMATICS OF LCP FOR 220KV ICT-2 & BUS SECTION (D08&D09)

DRAWING NO. : DEEUGBI69513007

APPROVED	K.IKEDA	K.I	06.02.2024	
CHECKED	M.SREEDHAR	M.S	05.02.2024	
DRAWN	K.MAHESH	K.M	03.02.2024	
DESIGN	SRIDEVI.Y	S.Y	11.01.2024	
	NAME	SIGN	DATE	

SCALE : NTS
REV : 01
PAGE 7
114 PAGES

FORMAT NO. : SG 07 3 04 R0

ALL DIMENSIONS ARE IN MM & WEIGHTS ARE IN kg PER UNIT UNLESS OTHER WISE, SPECIFIED.

REFERENCE: - .....

ALL INFORMATION CONTAINED IN THIS DOCUMENT IS CONFIDENTIAL AND THE PROPERTY OF TOSHIBA TRANSMISSION & DISTRIBUTION SYSTEMS (INDIA) PRIVATE LIMITED. REPRODUCTION OF THIS IN ANY FORM IS TO BE DONE WITH THE SPECIFIC PERMISSION OF THE ORGANISATION.

GCB (52) INTERLOCKING LOGIC

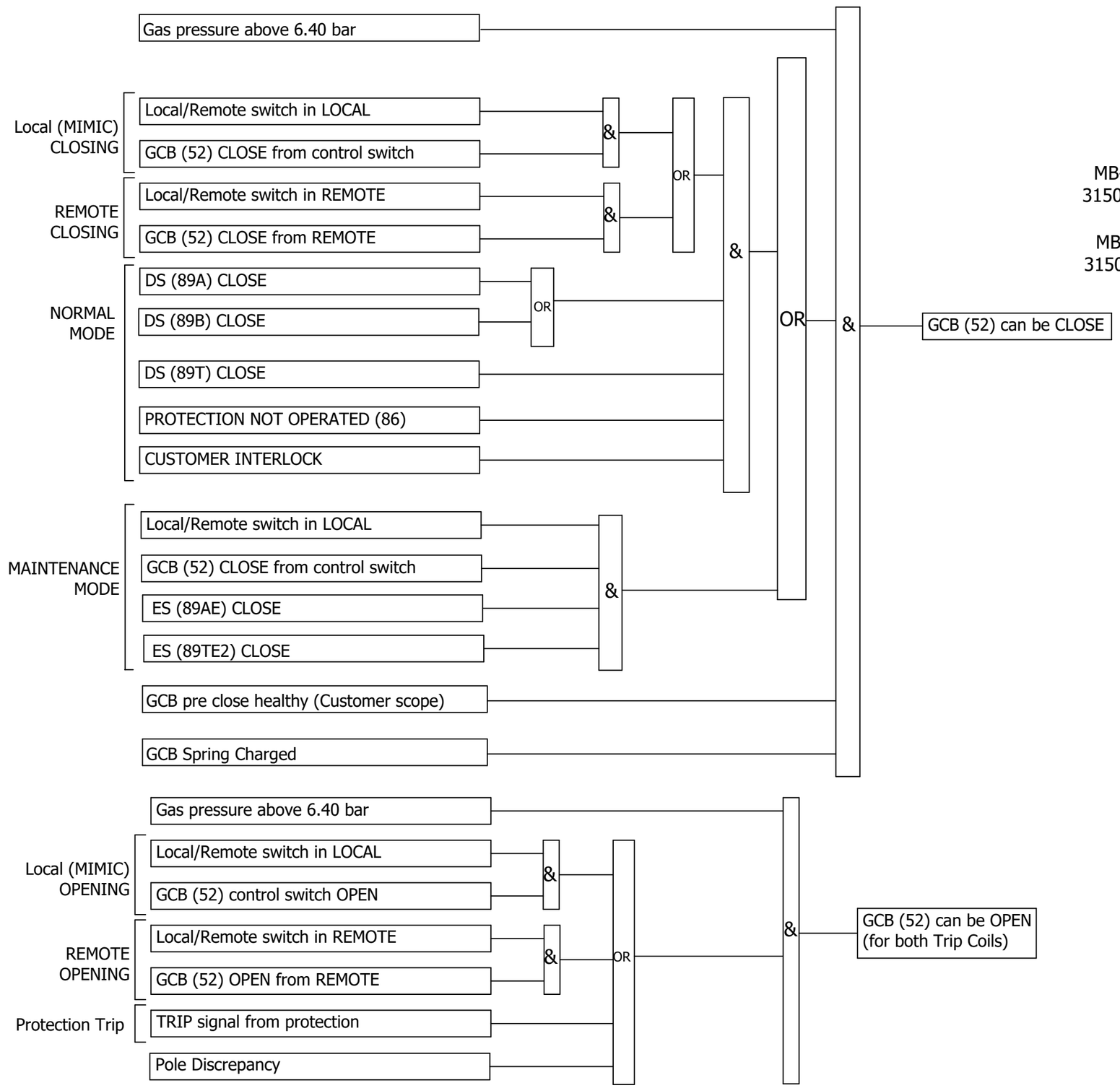

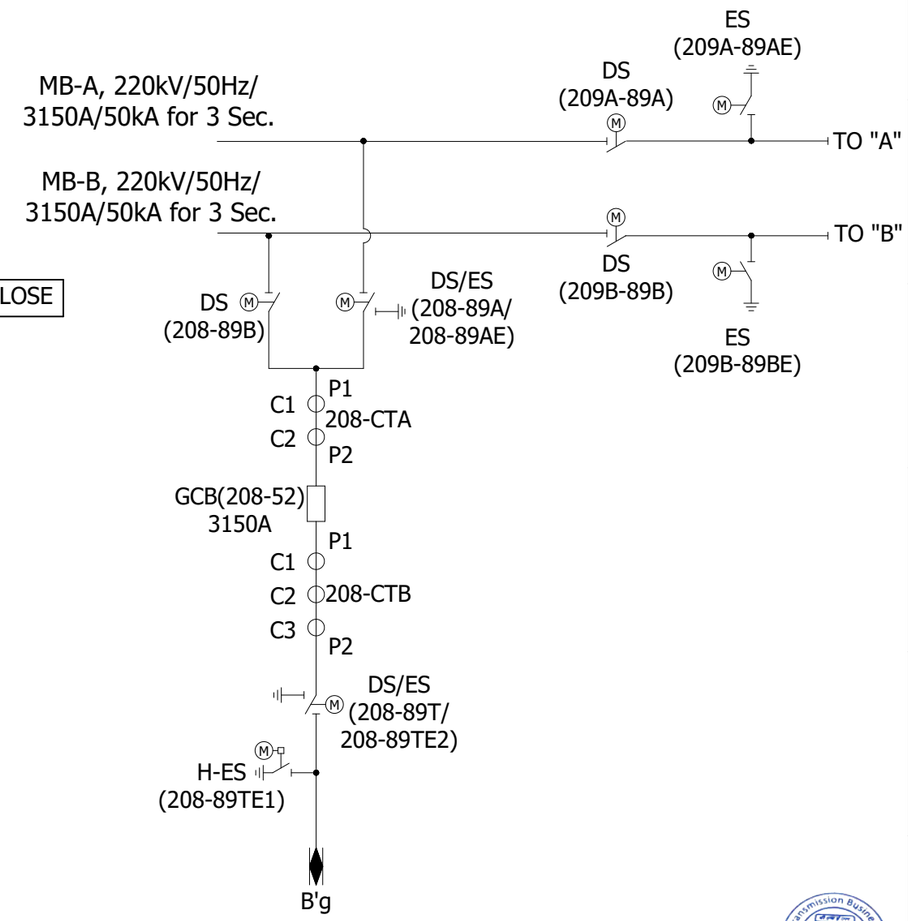

ICT-2
D08

BUS SECTION
D09

CHECKED
A.G.M (Elect)
ENGG. & QUALITY
OPTCL, BHUBANESWAR

APPROVED
Sr. G.M. (Elect)
ENGG. & QUALITY
OPTCL, BHUBANESWAR

REV	DETAILS OF MODIFICATION	DATE	REV.MARK	MODIFIED	CHECKED	APPROVED
01	AS PER CUST.COMMENTS	18.05.2024	SIGN / NAME			
00	FIRST ISSUE	06.02.2024	SIGN / NAME			

TOSHIBA
TRANSMISSION & DISTRIBUTION SYSTEMS (INDIA) PRIVATE LIMITED
SWITCHGEAR PRODUCTS DIVISION

CLIENT : ODISHA POWER TRANSMISSION CO.LTD.
PROJECT : 400/220kV GIS S.S AT ERSAMA, ODISHA & 400kV AIS FEEDER BAY EXTENSION AT DUBURI, ODISHA
CUSTOMER DRAWING NO. : TB-420-516-071-10A

PAGE DESCRIPTION : INTERLOCKING LOGIC-1

BAY NAME : GA, INTERNAL ARRANGEMENT & SCHEMATICS OF LCP FOR 220KV ICT-2 & BUS SECTION (D08&D09)

DRAWING NO. : DEEUGBI69513007

APPROVED	K.IKEDA	K.I	06.02.2024	
CHECKED	M.SREEDHAR	M.S	05.02.2024	
DRAWN	K.MAHESH	K.M	03.02.2024	
DESIGN	SRIDEVI.Y	S.Y	11.01.2024	
	NAME	SIGN	DATE	

SCALE : NTS
REV : 01
PAGE 8 / 114 PAGES

FORMAT NO. : SG 07 3 04 R0

ALL DIMENSIONS ARE IN MM & WEIGHTS ARE IN kg PER UNIT
UNLESS OTHER WISE, SPECIFIED.

REFERENCE: - .....

ALL INFORMATION CONTAINED IN THIS DOCUMENT IS CONFIDENTIAL AND THE PROPERTY OF TOSHIBA TRANSMISSION & DISTRIBUTION SYSTEMS (INDIA) PRIVATE LIMITED. REPRODUCTION OF THIS IN ANY FORM IS TO BE DONE WITH THE SPECIFIC PERMISSION OF THE ORGANISATION.

DS (89A) INTERLOCKING LOGIC

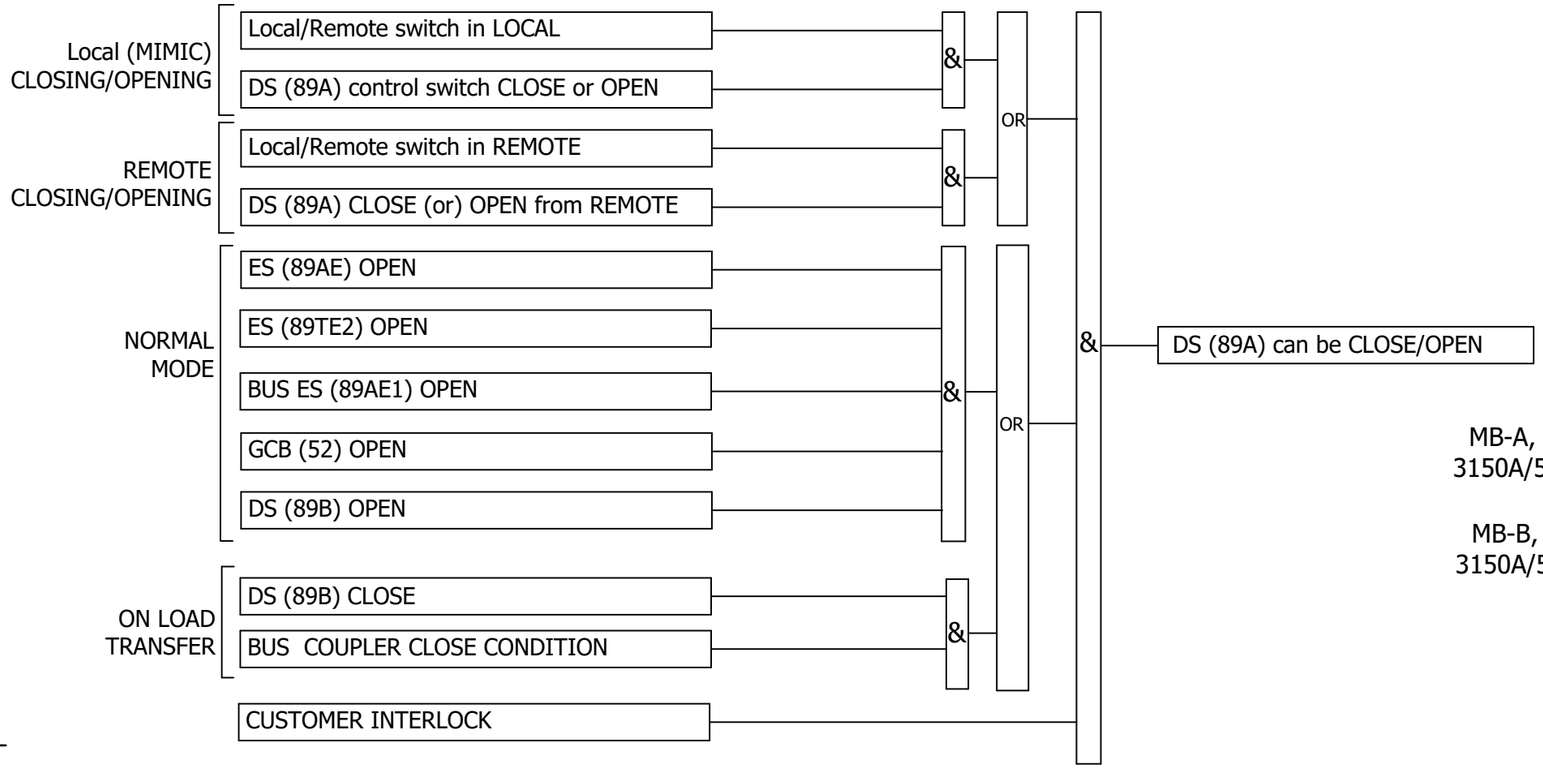

ES (89AE) INTERLOCKING LOGIC

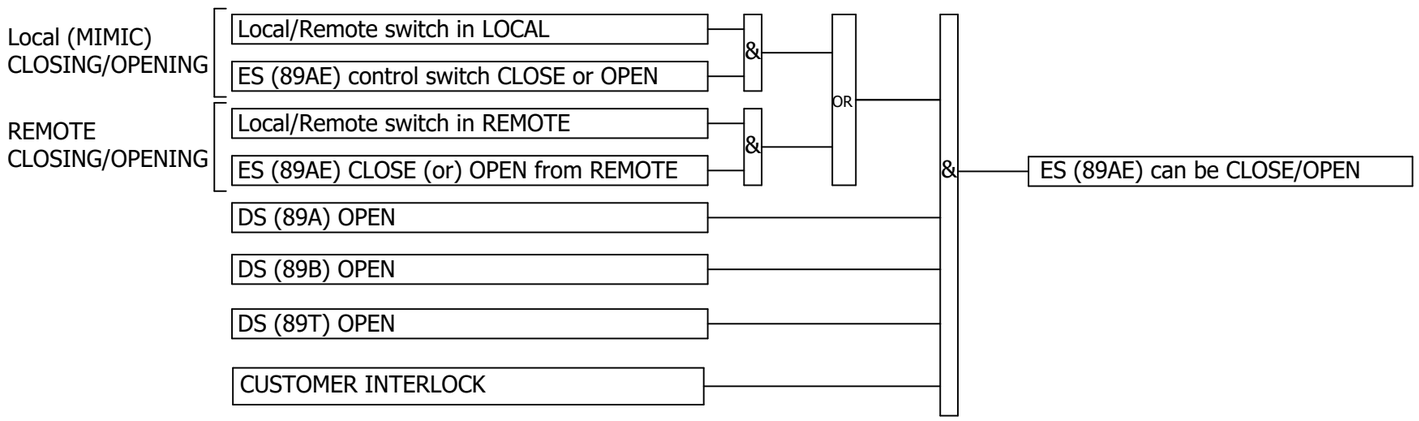

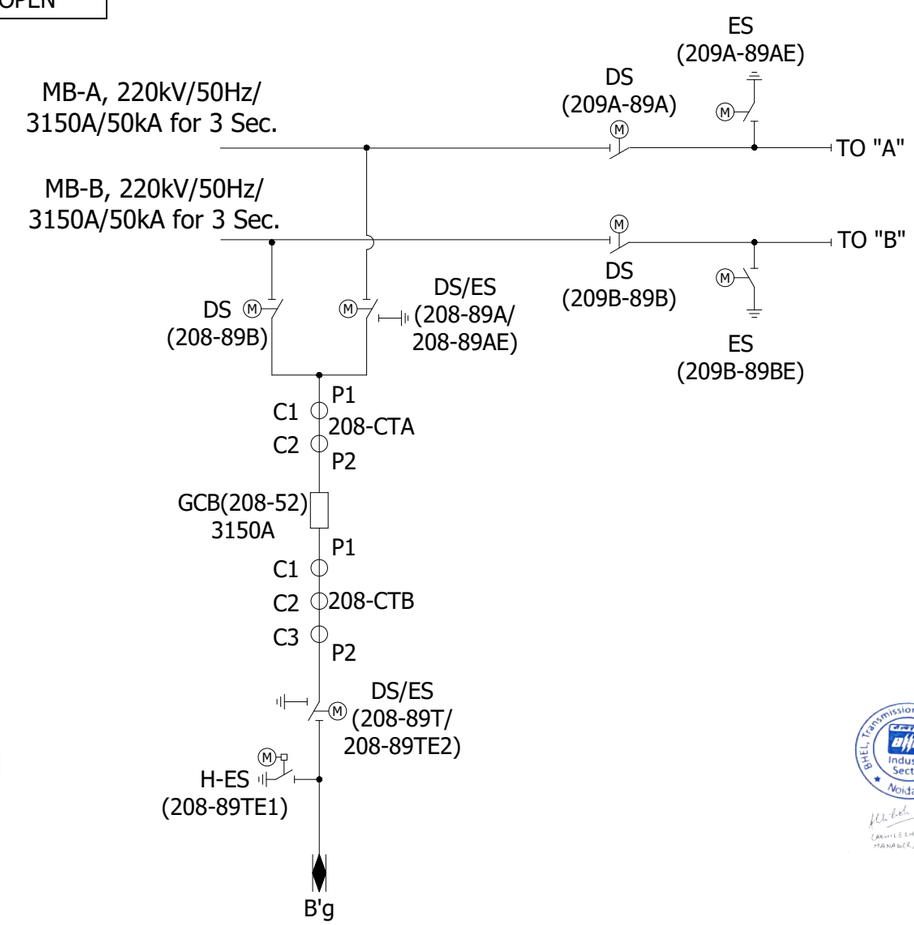

ICT-2
D08

BUS SECTION
D09

CHECKED
A.G.M (Elect)
ENGG. & QUALITY
OPTCL, BHUBANESWAR

APPROVED
Sr. G.M. (Elect)
ENGG. & QUALITY
OPTCL, BHUBANESWAR

REV	DETAILS OF MODIFICATION	DATE	REV.MARK		MODIFIED	CHECKED	APPROVED
01	AS PER CUST.COMMENTS	18.05.2024	△	SIGN / NAME			
00	FIRST ISSUE	06.02.2024	△	SIGN / NAME			

TOSHIBA
TRANSMISSION & DISTRIBUTION SYSTEMS (INDIA) PRIVATE LIMITED
SWITCHGEAR PRODUCTS DIVISION

CLIENT : ODISHA POWER TRANSMISSION CO.LTD.
PROJECT : 400/220kV GIS S.S AT ERSAMA, ODISHA & 400kV AIS FEEDER BAY EXTENSION AT DUBURI, ODISHA
CUSTOMER DRAWING NO. : TB-420-516-071-10A

PAGE DESCRIPTION : INTERLOCKING LOGIC-2

BAY NAME : GA, INTERNAL ARRANGEMENT & SCHEMATICS OF LCP FOR 220KV ICT-2 & BUS SECTION (D08&D09)

DRAWING NO. : DEEUGBI69513007

APPROVED	K.IKEDA	K.I	06.02.2024
CHECKED	M.SREEDHAR	M.S	05.02.2024
DRAWN	K.MAHESH	K.M	03.02.2024
DESIGN	SRIDEVI.Y	S.Y	11.01.2024
	NAME	SIGN	DATE

SCALE : NTS
REV : 01
PAGE 9
114 PAGES

571089/2024/TBG-TB_ENGG_PA

FORMAT NO. : SG 07 3 04 R0

ALL DIMENSIONS ARE IN MM & WEIGHTS ARE IN kg PER UNIT UNLESS OTHER WISE, SPECIFIED.

REFERENCE: - .....

ALL INFORMATION CONTAINED IN THIS DOCUMENT IS CONFIDENTIAL AND THE PROPERTY OF TOSHIBA TRANSMISSION & DISTRIBUTION SYSTEMS (INDIA) PRIVATE LIMITED. REPRODUCTION OF THIS IN ANY FORM IS TO BE DONE WITH THE SPECIFIC PERMISSION OF THE ORGANISATION.

DS (89B) INTERLOCKING LOGIC

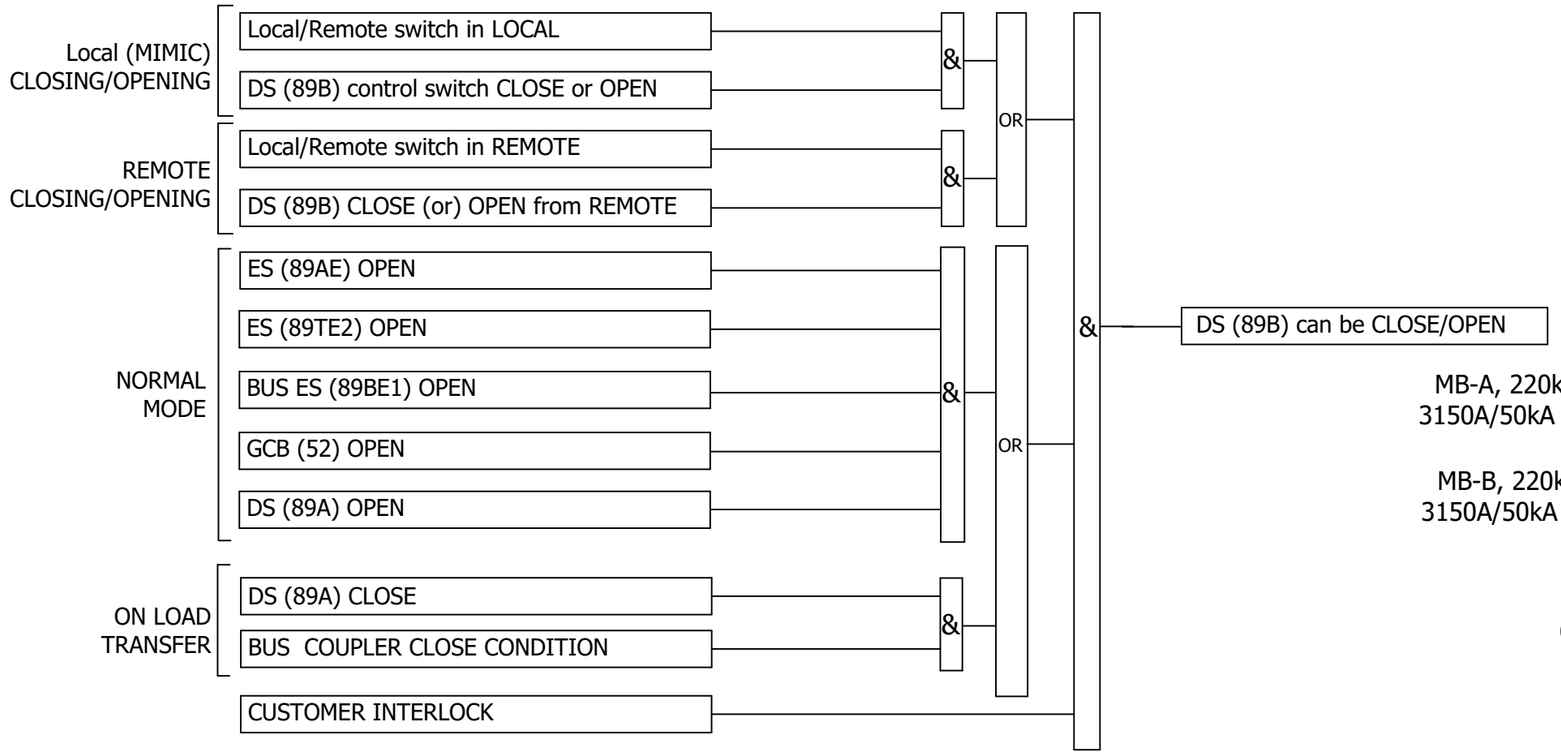

H-ES (89TE1) INTERLOCKING LOGIC

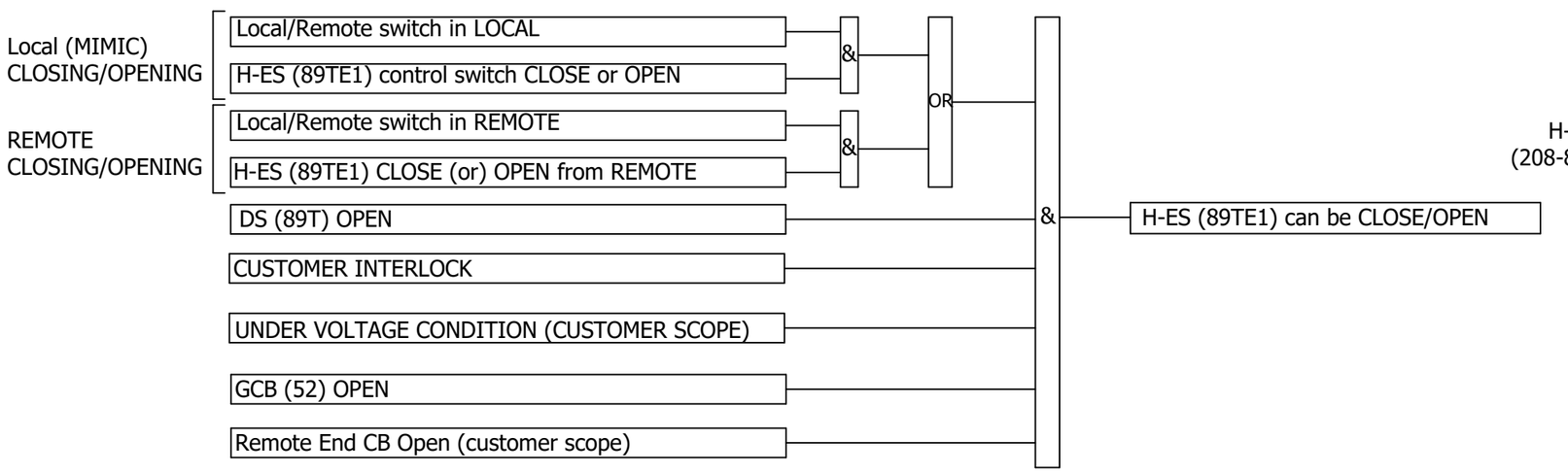

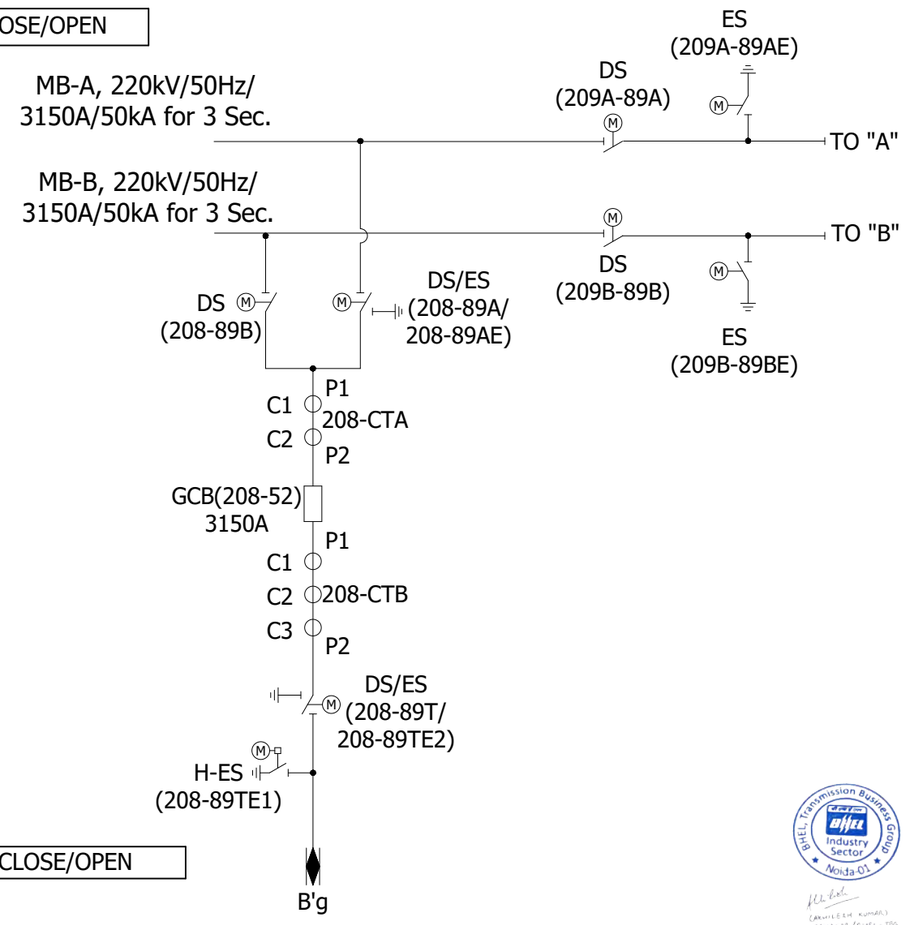

ICT-2
D08

BUS SECTION
D09

CHECKED
A.G.M (Elect)
ENGG. & QUALITY
OPTCL, BHUBANESWAR

APPROVED
Sr. G.M. (Elect)
ENGG. & QUALITY
OPTCL, BHUBANESWAR

REV	DETAILS OF MODIFICATION	DATE	REV.MARK	MODIFIED	CHECKED	APPROVED
01	AS PER CUST.COMMENTS	18.05.2024	SIGN / NAME			
00	FIRST ISSUE	06.02.2024	SIGN / NAME			

TOSHIBA
TRANSMISSION & DISTRIBUTION SYSTEMS (INDIA) PRIVATE LIMITED
SWITCHGEAR PRODUCTS DIVISION

CLIENT : ODISHA POWER TRANSMISSION CO.LTD.
PROJECT : 400/220kV GIS S.S AT ERSAMA, ODISHA & 400kV AIS FEEDER BAY EXTENSION AT DUBURI, ODISHA
CUSTOMER DRAWING NO. : TB-420-516-071-10A

PAGE DESCRIPTION : INTERLOCKING LOGIC-3

BAY NAME : GA, INTERNAL ARRANGEMENT & SCHEMATICS OF LCP FOR 220KV ICT-2 & BUS SECTION (D08&D09)

DRAWING NO. : DEEUGBI69513007

APPROVED	K.IKEDA	K.I	06.02.2024
CHECKED	M.SREEDHAR	M.S	05.02.2024
DRAWN	K.MAHESH	K.M	03.02.2024
DESIGN	SRIDEVI.Y	S.Y	11.01.2024
	NAME	SIGN	DATE

SCALE : NTS
REV : 01
PAGE 10 / 114 PAGES

FORMAT NO. : SG 07 3 04 R0

ALL DIMENSIONS ARE IN MM & WEIGHTS ARE IN kg PER UNIT
UNLESS OTHER WISE, SPECIFIED.

REFERENCE: - .....

ALL INFORMATION CONTAINED IN THIS DOCUMENT IS CONFIDENTIAL AND THE PROPERTY OF TOSHIBA TRANSMISSION & DISTRIBUTION SYSTEMS (INDIA) PRIVATE LIMITED. REPRODUCTION OF THIS IN ANY FORM IS TO BE DONE WITH THE SPECIFIC PERMISSION OF THE ORGANISATION.

DS (89T) INTERLOCKING LOGIC

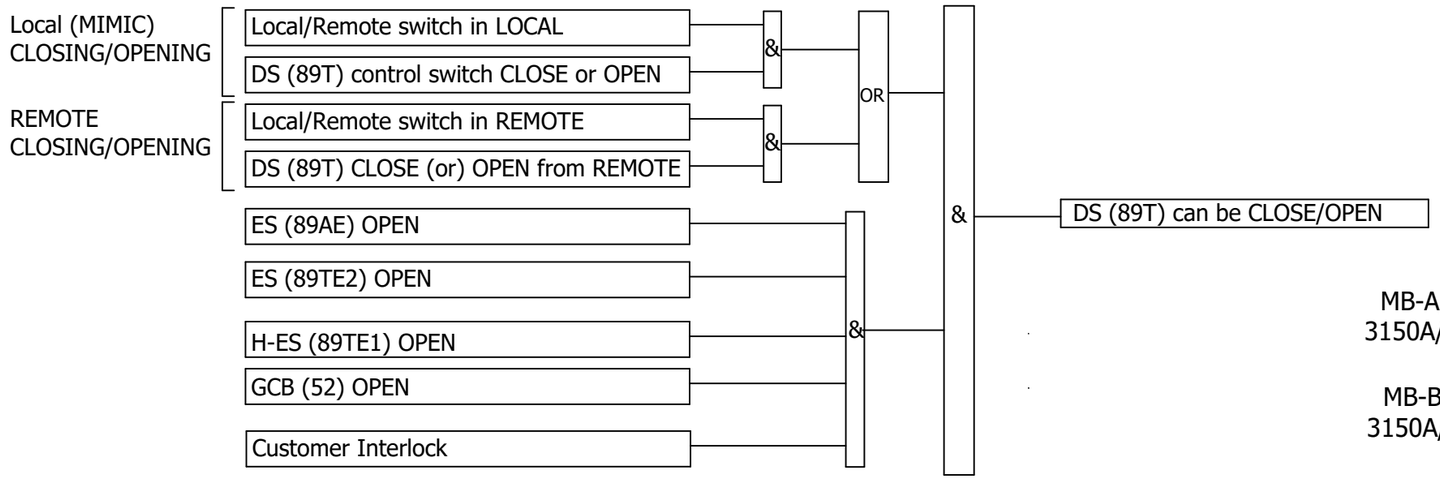

ES (89TE2) INTERLOCKING LOGIC

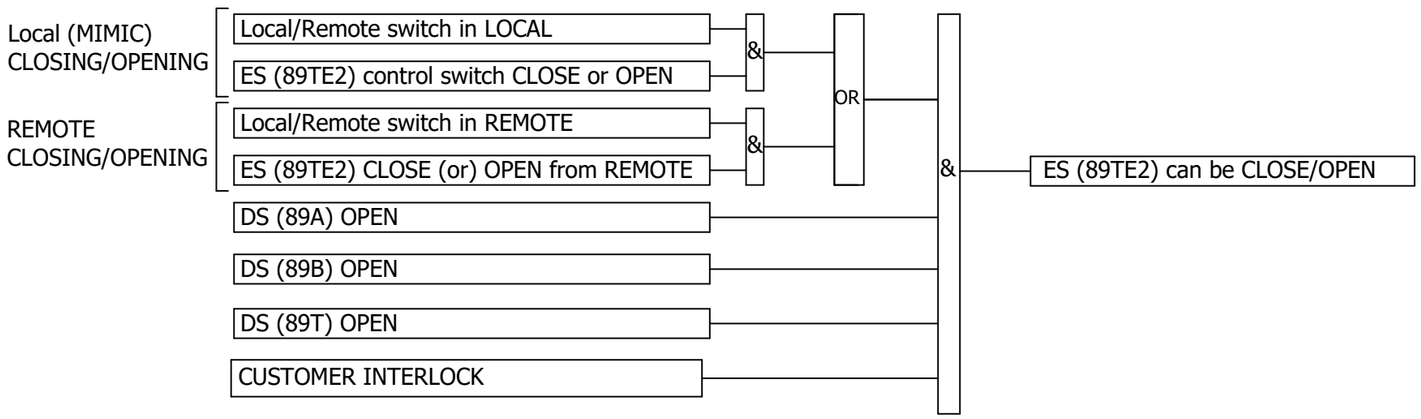

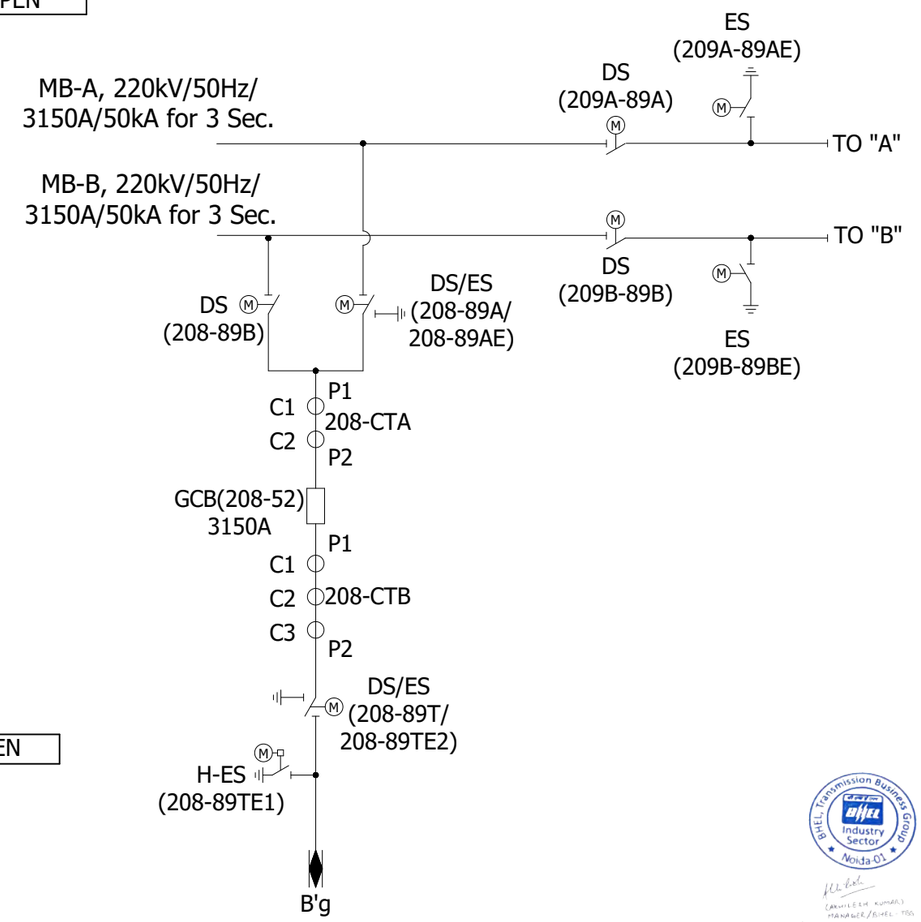

ICT-2
D08

BUS SECTION
D09

CHECKED
A.G.M (Elect)
ENGG. & QUALITY
OPTCL, BHUBANESWAR

APPROVED
Sr. G.M. (Elect)
ENGG. & QUALITY
OPTCL, BHUBANESWAR

REV	DETAILS OF MODIFICATION	DATE	REV.MARK	MODIFIED	CHECKED	APPROVED
01	AS PER CUST.COMMENTS	18.05.2024	△			
00	FIRST ISSUE	06.02.2024	△			

SIGN / NAME

TOSHIBA
TRANSMISSION & DISTRIBUTION SYSTEMS (INDIA) PRIVATE LIMITED
SWITCHGEAR PRODUCTS DIVISION

CLIENT : ODISHA POWER TRANSMISSION CO.LTD.
PROJECT : 400/220kV GIS S.S AT ERSAMA, ODISHA & 400kV AIS FEEDER BAY EXTENSION AT DUBURI, ODISHA
CUSTOMER DRAWING NO. : TB-420-516-071-10A

PAGE DESCRIPTION : INTERLOCKING LOGIC-4

BAY NAME : GA, INTERNAL ARRANGEMENT & SCHEMATICS OF LCP FOR 220KV ICT-2 & BUS SECTION (D08&D09)

DRAWING NO. : DEEUGBI69513007

	NAME	SIGN	DATE
APPROVED	K.IKEDA	K.I	06.02.2024
CHECKED	M.SREEDHAR	M.S	05.02.2024
DRAWN	K.MAHESH	K.M	03.02.2024
DESIGN	SRIDEVI.Y	S.Y	11.01.2024

SCALE : NTS
REV : 01
PAGE 11
114 PAGES

FORMAT NO. : SG 07 3 04 R0

ALL DIMENSIONS ARE IN MM & WEIGHTS ARE IN kg PER UNIT UNLESS OTHER WISE, SPECIFIED.

REFERENCE: - .....

ALL INFORMATION CONTAINED IN THIS DOCUMENT IS CONFIDENTIAL AND THE PROPERTY OF TOSHIBA TRANSMISSION & DISTRIBUTION SYSTEMS (INDIA) PRIVATE LIMITED. REPRODUCTION OF THIS IN ANY FORM IS TO BE DONE WITH THE SPECIFIC PERMISSION OF THE ORGANISATION.

DS (BS-89A) INTERLOCKING LOGIC

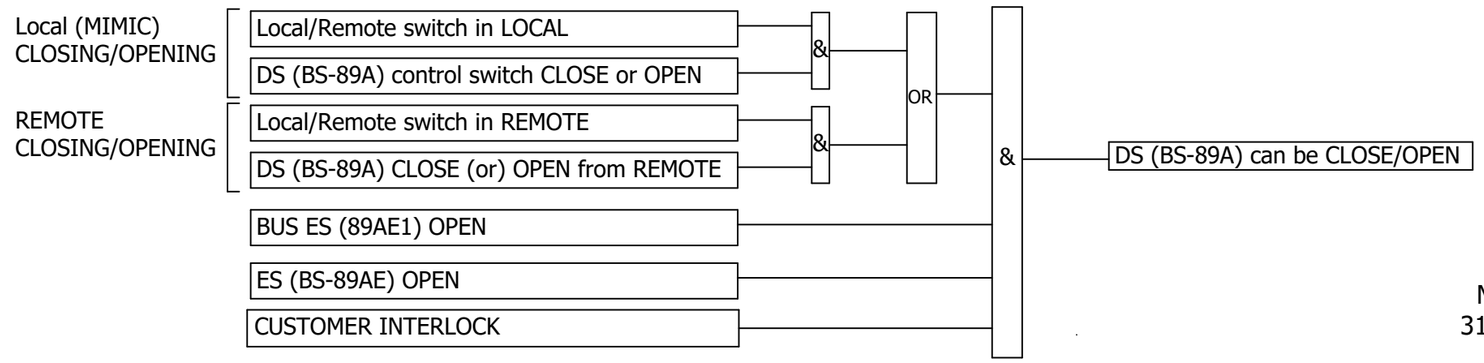

DS (BS-89B) INTERLOCKING LOGIC

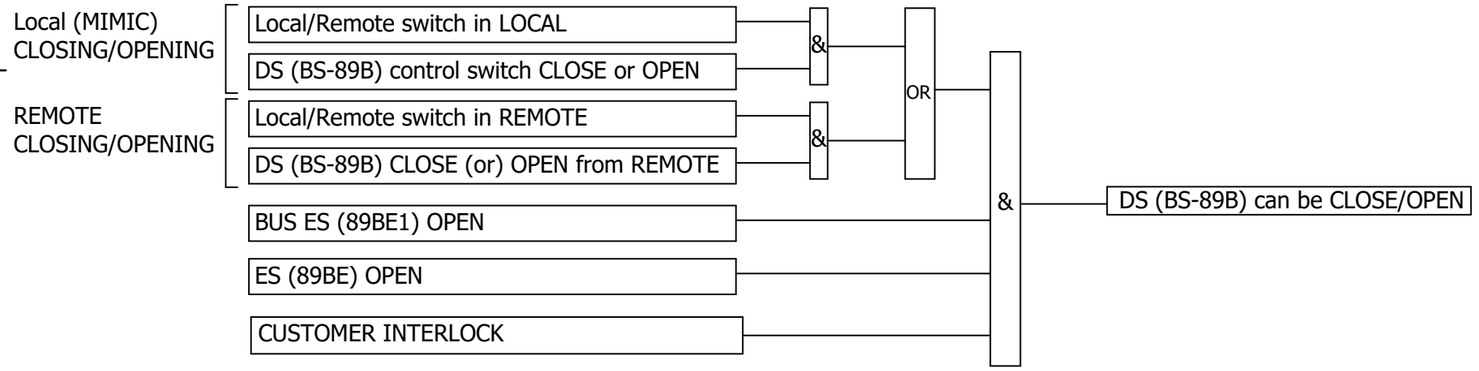

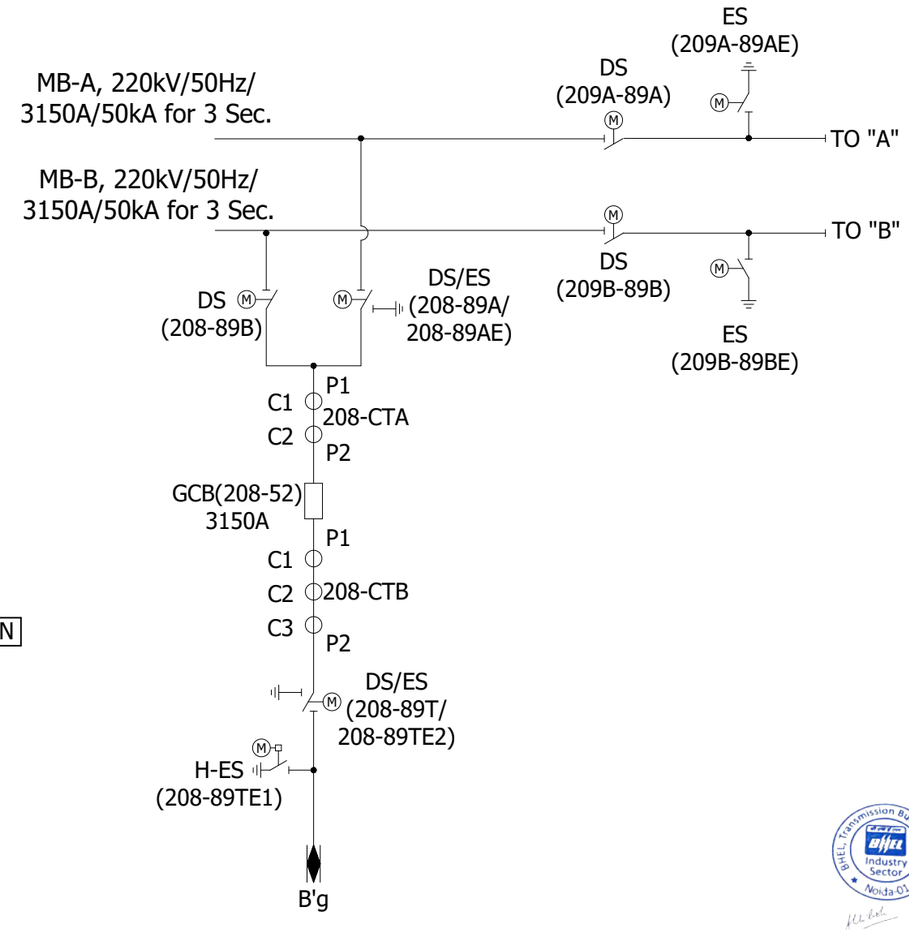

ICT-2
D08

BUS SECTION
D09

CHECKED
A.G.M (Elect)
ENGG. & QUALITY
OPTCL, BHUBANESWAR

APPROVED
Sr. G.M. (Elect)
ENGG. & QUALITY
OPTCL, BHUBANESWAR

REV	DETAILS OF MODIFICATION	DATE	REV.MARK	MODIFIED	CHECKED	APPROVED
01	AS PER CUST.COMMENTS	18.05.2024	SIGN / NAME			
00	FIRST ISSUE	06.02.2024	SIGN / NAME			

TOSHIBA
TRANSMISSION & DISTRIBUTION SYSTEMS (INDIA) PRIVATE LIMITED
SWITCHGEAR PRODUCTS DIVISION

CLIENT : ODISHA POWER TRANSMISSION CO.LTD.
PROJECT : 400/220kV GIS S.S AT ERSAMA, ODISHA & 400kV AIS FEEDER BAY EXTENSION AT DUBURI, ODISHA
CUSTOMER DRAWING NO. : TB-420-516-071-10A

PAGE DESCRIPTION : INTERLOCKING LOGIC-5

BAY NAME : GA, INTERNAL ARRANGEMENT & SCHEMATICS OF LCP FOR 220KV ICT-2 & BUS SECTION (D08&D09)

DRAWING NO. : DEEUGBI69513007

APPROVED	K.IKEDA	K.I	06.02.2024
CHECKED	M.SREEDHAR	M.S	05.02.2024
DRAWN	K.MAHESH	K.M	03.02.2024
DESIGN	SRIDEVI.Y	S.Y	11.01.2024
	NAME	SIGN	DATE

SCALE : NTS
REV : 01
PAGE 12
114 PAGES

FORMAT NO. : SG 07 3 04 R0

ALL DIMENSIONS ARE IN MM & WEIGHTS ARE IN kg PER UNIT UNLESS OTHER WISE, SPECIFIED.

REFERENCE: - .....

ALL INFORMATION CONTAINED IN THIS DOCUMENT IS CONFIDENTIAL AND THE PROPERTY OF TOSHIBA TRANSMISSION & DISTRIBUTION SYSTEMS (INDIA) PRIVATE LIMITED. REPRODUCTION OF THIS IN ANY FORM IS TO BE DONE WITH THE SPECIFIC PERMISSION OF THE ORGANISATION.

ES (BS-89AE) INTERLOCKING LOGIC

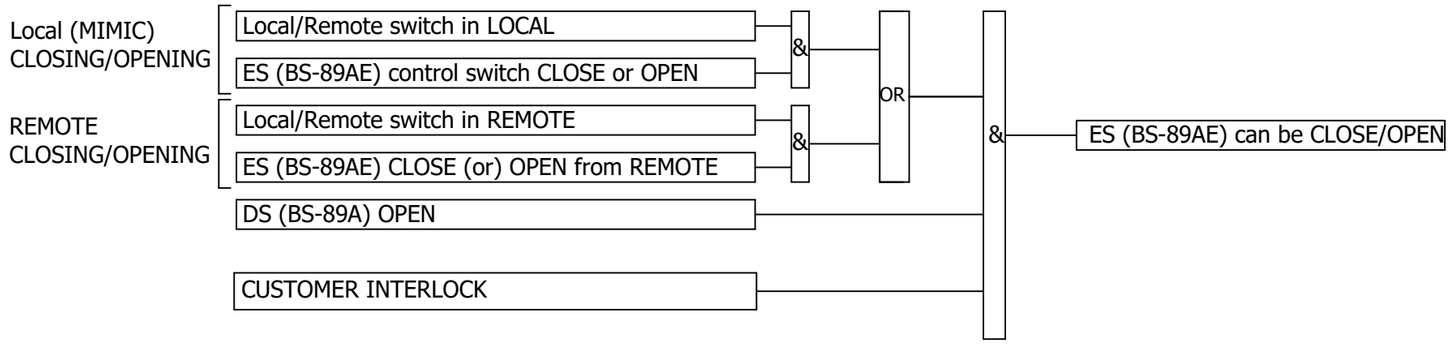

ES (209B-89BE) INTERLOCKING LOGIC

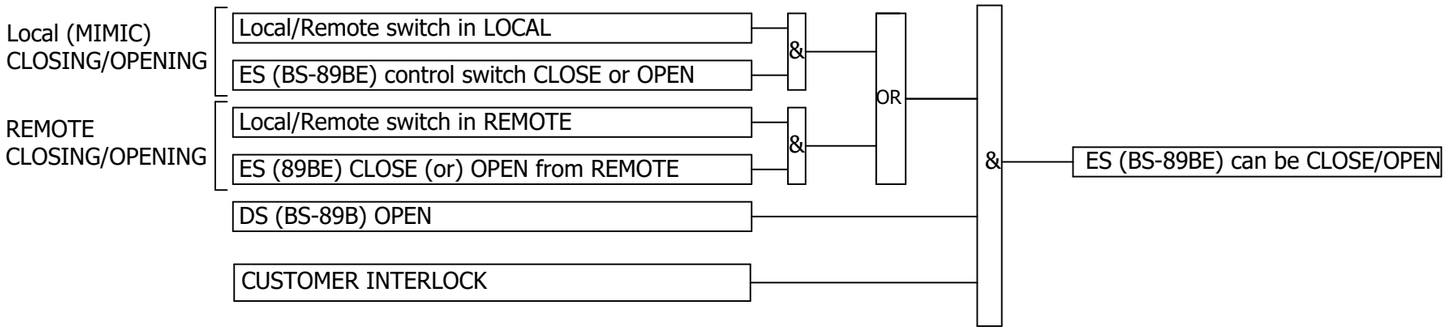

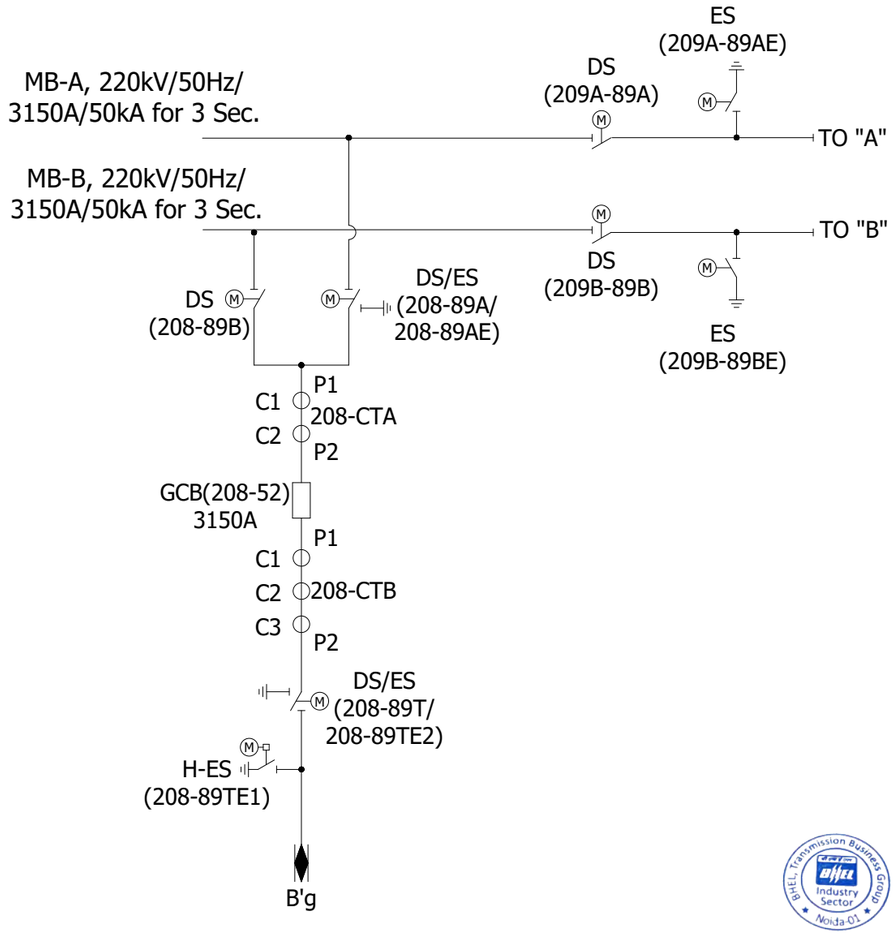

ICT-2
D08

BUS SECTION
D09

CHECKED
A.G.M (Elect)
ENGG. & QUALITY
OPTCL, BHUBANESWAR

APPROVED
Sr. G.M. (Elect)
ENGG. & QUALITY
OPTCL, BHUBANESWAR

REV	DETAILS OF MODIFICATION	DATE	REV.MARK	MODIFIED	CHECKED	APPROVED
01	AS PER CUST.COMMENTS	18.05.2024	SIGN / NAME			
00	FIRST ISSUE	06.02.2024	SIGN / NAME			

TOSHIBA
TRANSMISSION & DISTRIBUTION SYSTEMS (INDIA) PRIVATE LIMITED
SWITCHGEAR PRODUCTS DIVISION

CLIENT : ODISHA POWER TRANSMISSION CO.LTD.
PROJECT : 400/220kV GIS S.S AT ERSAMA, ODISHA & 400kV AIS FEEDER BAY EXTENSION AT DUBURI, ODISHA
CUSTOMER DRAWING NO. : TB-420-516-071-10A

PAGE DESCRIPTION : INTERLOCKING LOGIC-6

BAY NAME : GA, INTERNAL ARRANGEMENT & SCHEMATICS OF LCP FOR 220KV ICT-2 & BUS SECTION (D08&D09)

DRAWING NO. : DEEUGBI69513007

	NAME	SIGN	DATE
APPROVED	K.IKEDA	K.I	06.02.2024
CHECKED	M.SREEDHAR	M.S	05.02.2024
DRAWN	K.MAHESH	K.M	03.02.2024
DESIGN	SRIDEVI.Y	S.Y	11.01.2024

SCALE : NTS
REV : 01
PAGE 13
114 PAGES

571089/2024/TBG-TB_ENGG_PA

TENTATIVE

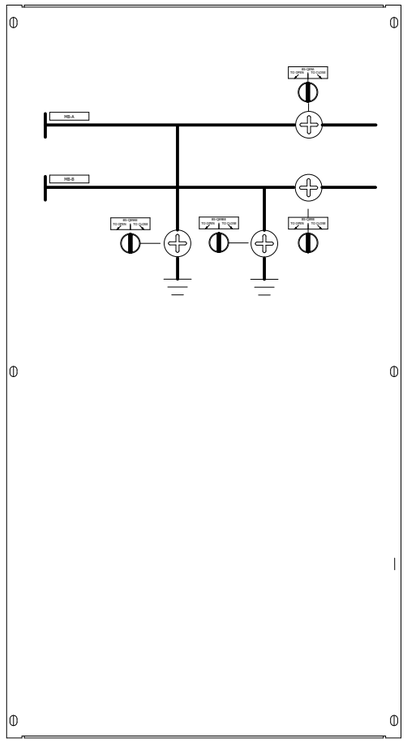

MIMIC DIAGRAM (FRONT VIEW)
BUS SECTION (D09)

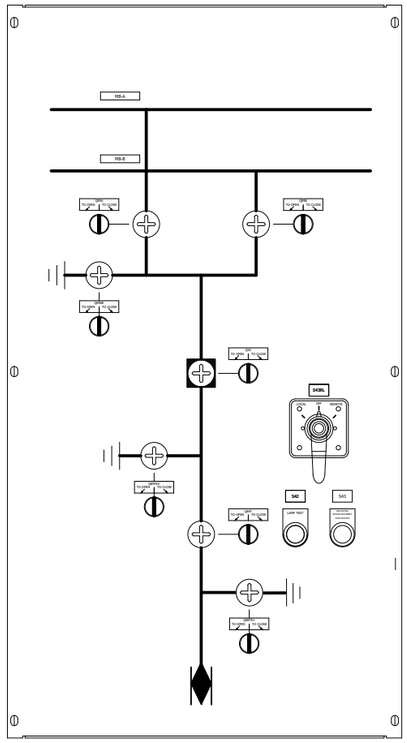

MIMIC DIAGRAM (FRONT VIEW)
ICT-2 (D08)

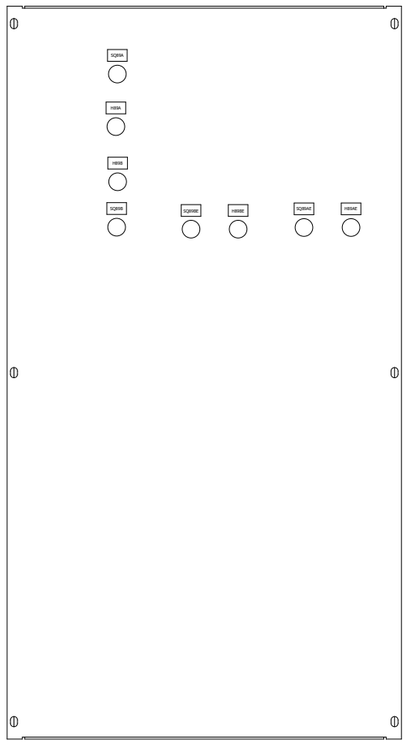

MIMIC DIAGRAM (REAR VIEW)
BUS SECTION (D09)

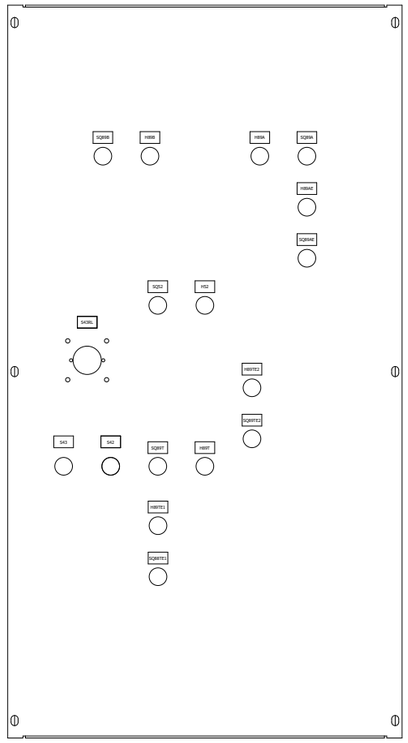

MIMIC DIAGRAM (REAR VIEW)
ICT-2 (D08)

CHECKED
A.G.M (Elect)
ENGG. & QUALITY
OPTCL, BHUBANESWAR

APPROVED
Sr. G.M. (Elect)
ENGG. & QUALITY
OPTCL, BHUBANESWAR

CONTROL SWITCH & LAMP INDICATORS

3 POSITION SPRING RETURN SWITCH GCB & DS/ES OPEN/CLOSE OPERATION	LAMP INDICATORS	
	GCB & DS	ES & HES
TO OPEN OFF TO CLOSE	RED (CLOSE) / GREEN (OPEN)	GREEN (OPEN) / RED (CLOSE)

MIMIC DIAGRAM (REAR VIEW LABEL)
S (52,89A,89B,89T,89AE,89TE2,89TE1) - OPEN/CLOSE CONTROL SW. LABEL
H (52,89A,89B,89T,89AE,89TE2,89TE1) - LAMP INDICATORS LABEL
S43RL - LOCAL & REMOTE SW. LABEL
S42 - LAMP TEST PUSH BUTTON LABEL
S43 - GCB MOTOR EXCESS RUN RESET PUSH BUTTON LABEL

SPECIFICATION OF SWITCH

SWITCH	INSCRIPTION	SWITCH	INSCRIPTION
S43RL CHANGE OVER SWITCH *1 *3	OFF LOCAL REMOTE *2=REMOTE	S43 PUSH BUTTON	GCB MOTOR EXCESS RUN RESET
CONTROL SWITCH FOR GCB, DS, ES	TO OPEN OFF TO CLOSE	S42 PUSH BUTTON	LAMP TEST

NOTE:
*1 = KEY LOCK FACILITY
*2 = KEY REMOVAL POSITION
*3 = STAY PUT

SPECIFICATION OF MIMIC BUS / SYMBOLS

MATERIAL	STRIP		
CIRCUIT	COLOR	WIDTH	MARK
220kV	GOLDEN YELLOW (IS 5:356)	10mm	
EARTH	TRAFFIC BLACK (RAL 9017)	5mm	

FIXING: GLUE

MB-A 10 / 50 — S89A 15 / 25 — DS(89A) TO OPEN TO CLOSE 15 / 50

BHEL Transmission Business Group Industry Sector Noida-01

ALL DIMENSIONS ARE IN MM & WEIGHTS ARE IN kg PER UNIT
UNLESS OTHER WISE, SPECIFIED.
REFERENCE: - .....
FORMAT NO. : SG 07 3 04 R0

ALL INFORMATION CONTAINED IN THIS DOCUMENT IS CONFIDENTIAL AND THE PROPERTY OF TOSHIBA TRANSMISSION & DISTRIBUTION SYSTEMS (INDIA) PRIVATE LIMITED. REPRODUCTION OF THIS IN ANY FORM IS TO BE DONE WITH THE SPECIFIC PERMISSION OF THE ORGANISATION.

REV	DETAILS OF MODIFICATION	DATE	REV.MARK	MODIFIED	CHECKED	APPROVED
01	AS PER CUST.COMMENTS	18.05.2024	SIGN / NAME			
00	FIRST ISSUE	06.02.2024	SIGN / NAME			

TOSHIBA
TRANSMISSION & DISTRIBUTION SYSTEMS (INDIA) PRIVATE LIMITED
SWITCHGEAR PRODUCTS DIVISION

CLIENT : ODISHA POWER TRANSMISSION CO.LTD.
PROJECT : 400/220kV GIS S.S AT ERSAMA, ODISHA & 400kV AIS FEEDER BAY EXTENSION AT DUBURI, ODISHA
CUSTOMER DRAWING NO. : TB-420-516-071-10A

PAGE DESCRIPTION : MIMIC

BAY NAME : GA, INTERNAL ARRANGEMENT & SCHEMATICS OF LCP FOR 220KV ICT-2 & BUS SECTION (D08&D09)
DRAWING NO. : DEEUGBI69513007

	NAME	SIGN	DATE
APPROVED	K.IKEDA	K.I	06.02.2024
CHECKED	M.SREEDHAR	M.S	05.02.2024
DRAWN	K.MAHESH	K.M	03.02.2024
DESIGN	SRIDEVI.Y	S.Y	11.01.2024

SCALE : NTS
REV : 01
PAGE 14 / 114 PAGES

FORMAT NO. : SG 07 3 04 R0

ALL DIMENSIONS ARE IN MM & WEIGHTS ARE IN kg PER UNIT UNLESS OTHER WISE, SPECIFIED.

REFERENCE: - .....

ALL INFORMATION CONTAINED IN THIS DOCUMENT IS CONFIDENTIAL AND THE PROPERTY OF TOSHIBA TRANSMISSION & DISTRIBUTION SYSTEMS (INDIA) PRIVATE LIMITED. REPRODUCTION OF THIS IN ANY FORM IS TO BE DONE WITH THE SPECIFIC PERMISSION OF THE ORGANISATION.

TENTATIVE

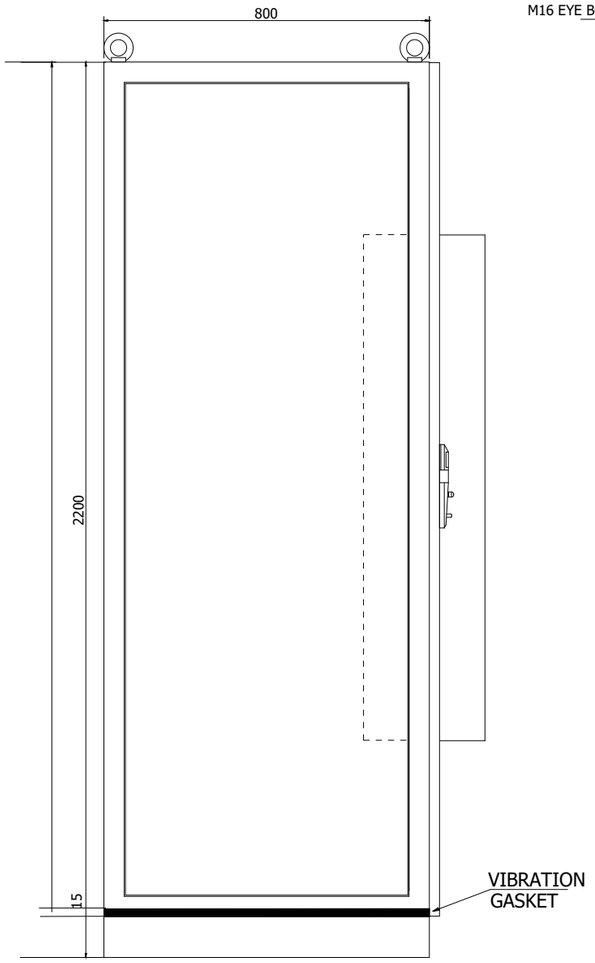

LEFT SIDE VIEW

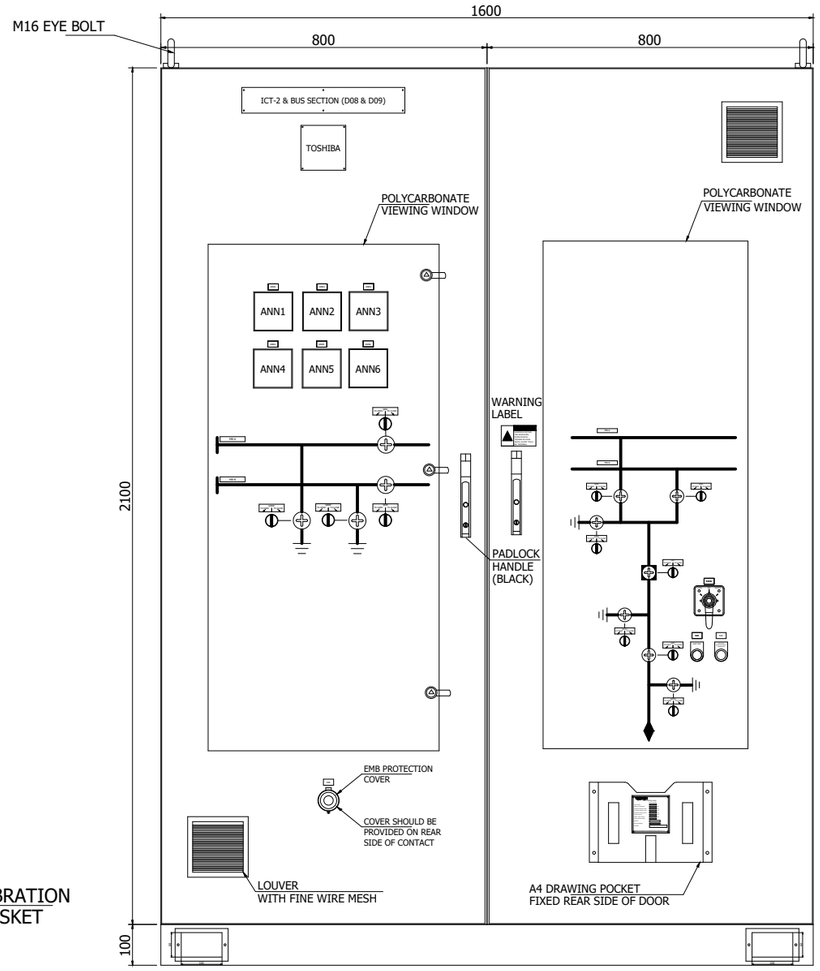

FRONT VIEW OF OUTER DOOR

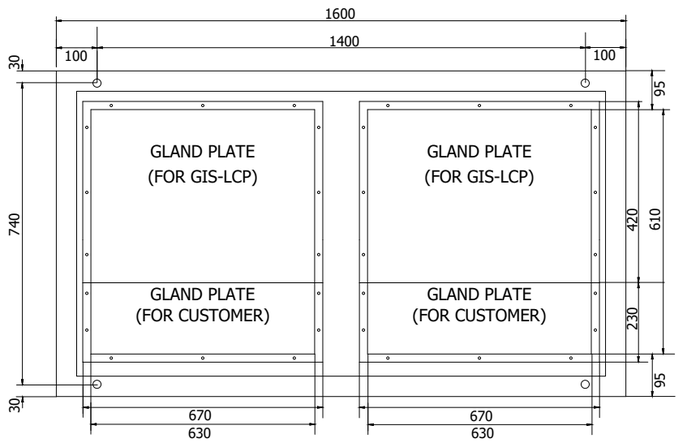

(FRONT SIDE)

BOTTOM VIEW

PANEL SPECIFICATION

1. MATERIAL
   a) COLD ROLLED SHEET STEEL
2. SHEET THICKNESS
   a) GLAND PLATE : 3MM
   b) ALL OTHER : 2.5MM
3. DOOR OPENING
   a) LEFT DOOR : LEFT HAND OPENING
   b) RIGHT DOOR : RIGHT HAND OPENING
4. DOOR OPENING ANGLE: 90° & 120° (WITH STOPPER)
5. PROTECTION CLASS
   a) ENCLOSURE : IP 54 (INDOOR APPLICATION)
6. COLOUR
   a) EXTERNAL SURFACE : RAL 7035 (LIGHT GREY) (MATT FINISH)
   b) INTERNAL SURFACE : RAL 9010 (WHITE) (FULL GLOSSY)
   c) PLINTH : RAL 9005 (BLACK)) (MATT FINISH)
   d) MIMIC PLATE : RAL 9010 (WHITE) (FULL GLOSSY)
   e) MIMIC : GOLDEN YELLOW-SHADE 356 OF IS 5
   f) EARTH SYMBOL : BLACK
7. POWDER COATING THICKNESS (OUTSIDE/INSIDE SURFACE)
   a) MINIMUM-70μ, MAXIMUM-150μ
8. LABEL DETAILS
   a) LCP NAME PLATE : LEFT FRONT DOOR TOP
   b) LCP RATING PLATE : ON DRAWING POCKET
   c) FIRM NAME PLATE : LEFT DOOR ABOVE THE VIEWING WINDOW
   d) WARNING LABEL : RIGHT DOOR ABOVE FRONT DOOR HANDLE
9. GASKETS: LCC DOORS & PROTECTIVE SHEET DOOR TO BE GASKETED WITH NEOPRENE/EPDB GASKETS AND SHOULD NOT VISIBLE FROM OUTSIDE
10. A4 SIZE DRAWING POCKET TO BE PROVIDED AT FRONT DOOR REAR SIDE BOTTOM
11. OUTER DOOR 3-POINT LOCK'S PADLOCK AND IT'S LOCKING PIN MUST BE SS MATERIAL -316 GRADE
12. ALL DIMENSION ARE IN MM UNLESS SPECIFIED.

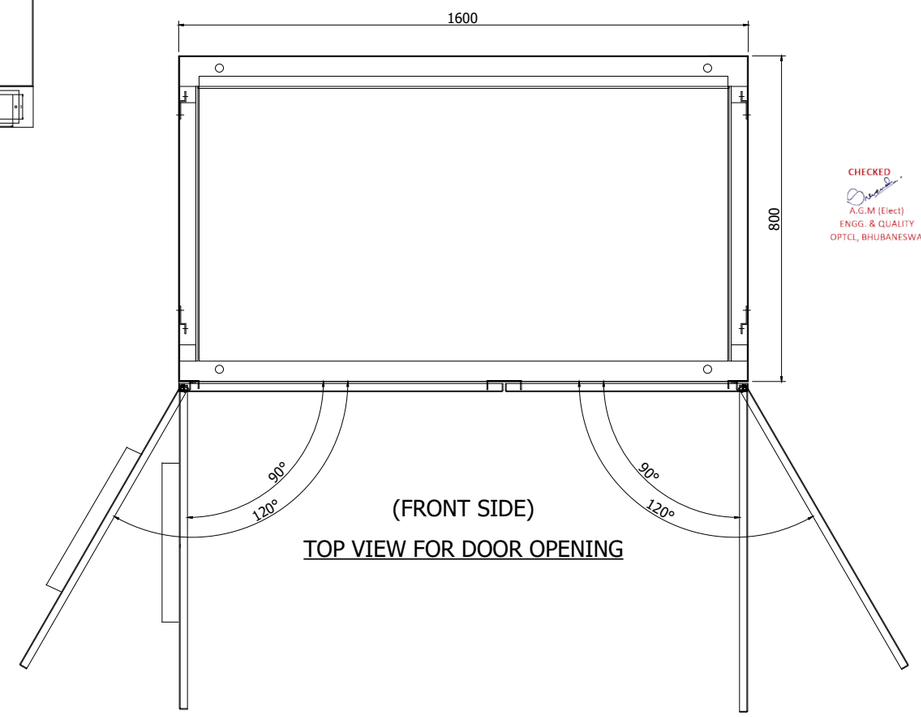

(FRONT SIDE)

TOP VIEW FOR DOOR OPENING

CHECKED
A.G.M (Elect)
ENGG. & QUALITY
OPTCL, BHUBANESWAR

APPROVED
Sr. G.M. (Elect)
ENGG. & QUALITY
OPTCL, BHUBANESWAR

BHEL Transmission Business Group Industry Sector Noida-01

(ANUILESH KUMAR)
MANAGER/BHEL-TBG

REV	DETAILS OF MODIFICATION	DATE	REV.MARK		MODIFIED	CHECKED	APPROVED
				SIGN			
				NAME			
01	AS PER CUST.COMMENTS	18.05.2024		SIGN			
				NAME			
00	FIRST ISSUE	06.02.2024		SIGN			
				NAME			

TOSHIBA

TRANSMISSION & DISTRIBUTION SYSTEMS (INDIA) PRIVATE LIMITED

SWITCHGEAR PRODUCTS DIVISION

CLIENT : ODISHA POWER TRANSMISSION CO.LTD.

PROJECT : 400/220kV GIS S.S AT ERSAMA, ODISHA & 400kV AIS FEEDER BAY EXTENSION AT DUBURI, ODISHA

CUSTOMER DRAWING NO. : TB-420-516-071-10A

PAGE DESCRIPTION : OUTLINE OF LCP

BAY NAME : GA, INTERNAL ARRANGEMENT & SCHEMATICS OF LCP FOR 220KV ICT-2 & BUS SECTION (D08&D09)

DRAWING NO. : DEEUGBI69513007

APPROVED	K.IKEDA	K.I	06.02.2024
CHECKED	M.SREEDHAR	M.S	05.02.2024
DRAWN	K.MAHESH	K.M	03.02.2024
DESIGN	SRIDEVI.Y	S.Y	11.01.2024
	NAME	SIGN	DATE

SCALE : NTS

REV : 01

PAGE 15 114 PAGES

571089/2024/TBG-TB_ENGG_PA

FORMAT NO. : SG 07 3 04 R0

ALL DIMENSIONS ARE IN MM & WEIGHTS ARE IN kg PER UNIT
UNLESS OTHER WISE, SPECIFIED.
REFERENCE: - .....

ALL INFORMATION CONTAINED IN THIS DOCUMENT IS CONFIDENTIAL AND THE PROPERTY OF TOSHIBA TRANSMISSION & DISTRIBUTION SYSTEMS (INDIA) PRIVATE LIMITED. REPRODUCTION OF THIS IN ANY FORM IS TO BE DONE WITH THE SPECIFIC PERMISSION OF THE ORGANISATION.

TENTATIVE

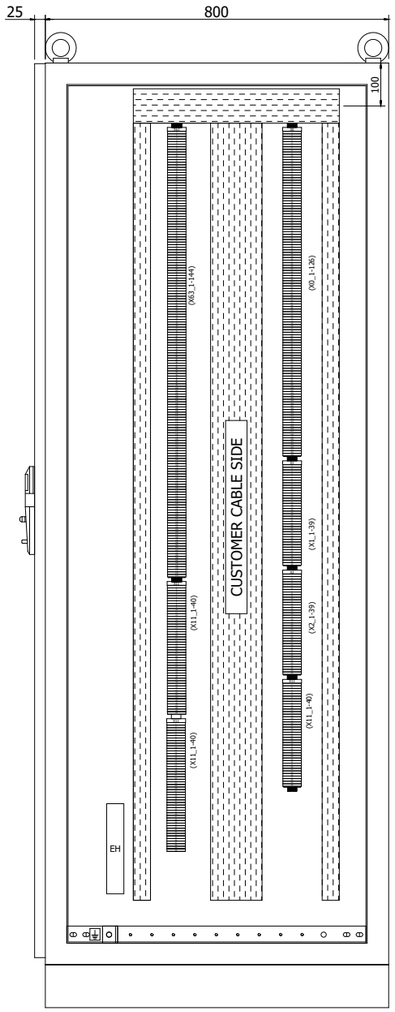

VIEW B-B

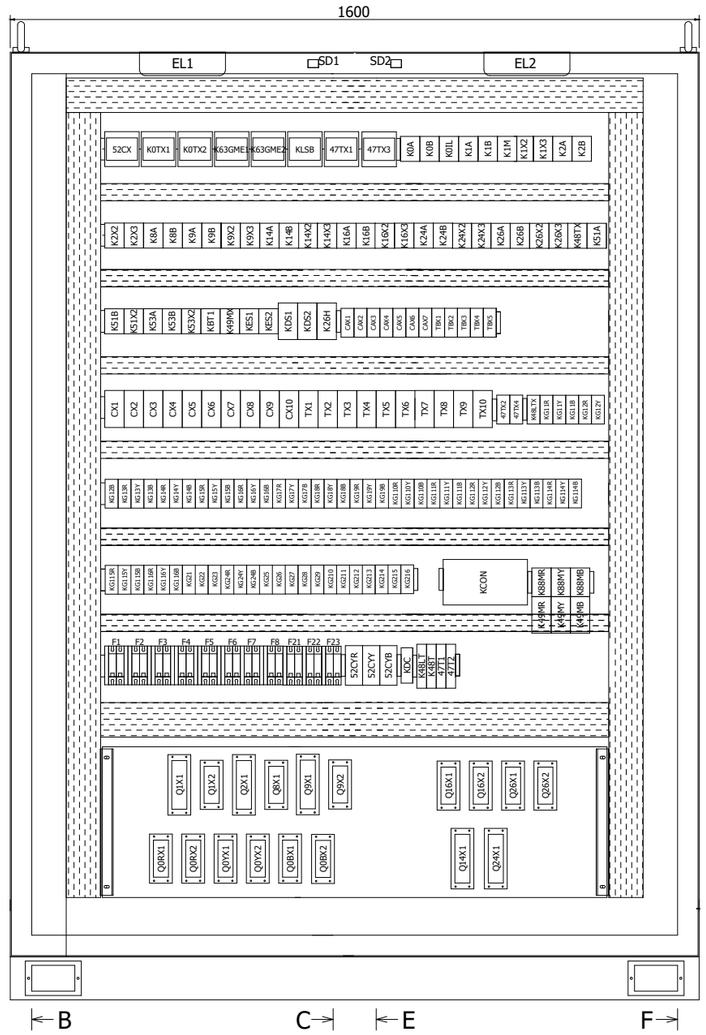

VIEW D-D

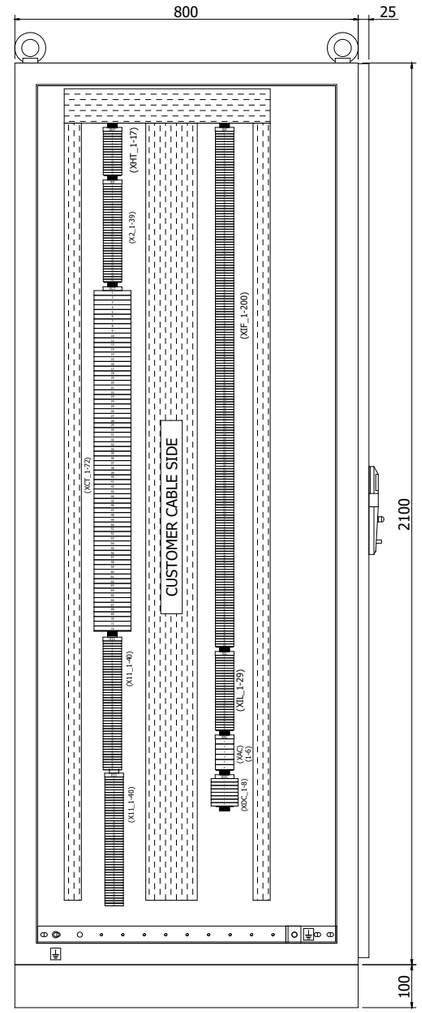

VIEW C-C

WARNING LABEL (FIXING GLUE

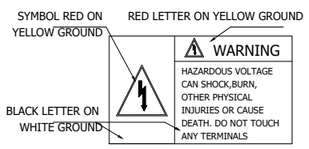

SPECIFICATION OF NAME PLATE

MATERIAL : STAINLESS STEEL (400 X 63)
FIXING : M3x8mm SS SCREW
BLACK LETTER ON SILVER GROUND

ICT-2 & BUS SECTION (D08&D09)

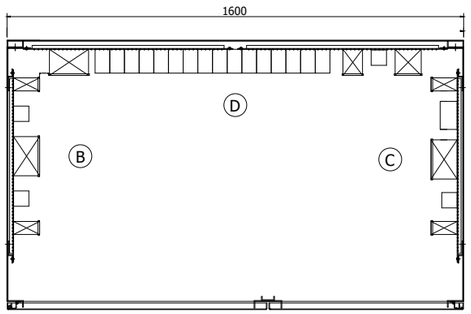

TOP VIEW

NOTE:1

TAG NAME SHOULD BE PLACED ON BOTH PANEL & DEVICE CORRESPONDING
SPECIFICATION OF CARD PLATE:
ENGRAVED BLACK LETTER ON WHITE BACK GROUND
MATERIAL: LAMICOID
FIXING: GLUE
SIZE: SUITABLE SIZE

NOTE:2

1) ALL INDIVIDUAL BOTTOM PLATES ARE GASKETTED & 3MM THICK CRCA
2) BOTTOM PLATES ARE DRILLED AT SITE
3) CABLES FROM GIS TO LCP (CABLE GLANDS & ASSOCIATED ACCESSORIES ARE SUPPLIED BY TOSHIBA-TTDI)
4) CABLES FROM CENTRAL CONTROL SYSTEM TO LCP (CABLES & COMPRESSION GLANDS & OTHER ASSOCIATED ACCESSORIES ARE OUT OF SCOPE OF SUPPLY)

NOTE:3

1) COMPONENTS POSITION MAY VARY DURING DETAIL ENGINEERING AFTER APPROVAL OF SCHEMATIC.

CHECKED
A.G.M (Elect)
ENGG. & QUALITY
OPTCL, BHUBANESWAR

APPROVED
Sr. G.M. (Elect)
ENGG. & QUALITY
OPTCL, BHUBANESWAR

BHEL Transmission Business Group Industry Sector Noida-01

REV	DETAILS OF MODIFICATION	DATE	REV.MARK		MODIFIED	CHECKED	APPROVED
				SIGN			
				NAME			
01	AS PER CUST.COMMENTS	18.05.2024		SIGN			
				NAME			
00	FIRST ISSUE	06.02.2024		SIGN			
				NAME			

TOSHIBA
TRANSMISSION & DISTRIBUTION SYSTEMS (INDIA) PRIVATE LIMITED
SWITCHGEAR PRODUCTS DIVISION

CLIENT : ODISHA POWER TRANSMISSION CO.LTD.
PROJECT : 400/220kV GIS S.S AT ERSAMA, ODISHA & 400kV AIS FEEDER BAY EXTENSION AT DUBURI, ODISHA
CUSTOMER DRAWING NO. : TB-420-516-071-10A

PAGE DESCRIPTION : INTERNAL ARRANGEMENT OF LCP

BAY NAME : GA, INTERNAL ARRANGEMENT & SCHEMATICS OF LCP FOR 220KV ICT-2 & BUS SECTION (D08&D09)
DRAWING NO. : DEEUGBI69513007

APPROVED	K.IKEDA	K.I	06.02.2024	SCALE : NTS
CHECKED	M.SREEDHAR	M.S	05.02.2024	REV : 01
DRAWN	K.MAHESH	K.M	03.02.2024	
DESIGN	SRIDEVI.Y	S.Y	11.01.2024	PAGE 16
	NAME	SIGN	DATE	114 PAGES

571089/2024/TBG-TB_ENGG_PA

ANNUNCIATOR DESCRIPTION

LED COLOUR: RED, AUX.VOLTAGE: 220VDC

CHECKED — A.G.M (Elect) ENGG. & QUALITY OPTCL, BHUBANESWAR

APPROVED — Sr. G.M. (Elect) ENGG. & QUALITY OPTCL, BHUBANESWAR

ANN1

F1	LOW GAS PRES. LVL-1 ALARM (208-1R)	F9	LOW GAS PRES. LVL-1 ALARM (208-3B)
F2	LOW GAS PRES. LVL-1 ALARM (208-1Y)	F10	LOW GAS PRES. LVL-1 GCB ALARM (208-4R)
F3	LOW GAS PRES. LVL-1 ALARM (208-1B)	F11	LOW GAS PRES. LVL-1 GCB ALARM (208-4Y)
F4	LOW GAS PRES. LVL-1 ALARM (208-2R)	F12	LOW GAS PRES. LVL-1 GCB ALARM (208-4B)
F5	LOW GAS PRES. LVL-1 ALARM (208-2Y)	F13	LOW GAS PRES. LVL-1 ALARM (208-5R)
F6	LOW GAS PRES. LVL-1 ALARM (208-2B)	F14	LOW GAS PRES. LVL-1 ALARM (208-5Y)
F7	LOW GAS PRES. LVL-1 ALARM (208-3R)	F15	LOW GAS PRES. LVL-1 ALARM (208-5B)
F8	LOW GAS PRES. LVL-1 ALARM (208-3Y)	F16	LOW GAS PRES. LVL-1 ALARM (208-6R)

TEST, MUTE, ACK., RST.

MBAS 11 ALARM ANNUNCIATOR

ANN2

F1	LOW GAS PRES. LVL-1 ALARM (208-6Y)	F9	LOW GAS PRES. LVL-1 ALARM (209-1R)
F2	LOW GAS PRES. LVL-1 ALARM (208-6B)	F10	LOW GAS PRES. LVL-1 ALARM (209-1Y)
F3	LOW GAS PRES. LVL-2 ALARM (208-7R)	F11	LOW GAS PRES. LVL-1 ALARM (209-1B)
F4	LOW GAS PRES. LVL-2 ALARM (208-7Y)	F12	LOW GAS PRES. LVL-1 ALARM (209-2R)
F5	LOW GAS PRES. LVL-2 ALARM (208-7B)	F13	LOW GAS PRES. LVL-1 ALARM (209-2Y)
F6	LOW GAS PRES. LVL-1 ALARM (208-8R)	F14	LOW GAS PRES. LVL-1 ALARM (209-2B)
F7	LOW GAS PRES. LVL-1 ALARM (208-8Y)	F15	LOW GAS PRES. LVL-1 ALARM (209-3R)
F8	LOW GAS PRES. LVL-1 ALARM (208-8B)	F16	LOW GAS PRES. LVL-1 ALARM (209-3Y)

TEST, MUTE, ACK., RST.

MBAS 11 ALARM ANNUNCIATOR

ANN3

F1	LOW GAS PRES. LVL-1 ALARM (209-3B)	F9	LOW GAS PRES. LVL-1 ALARM (209-6Y)
F2	LOW GAS PRES. LVL-1 ALARM (209-4R)	F10	LOW GAS PRES. LVL-1 ALARM (209-6B)
F3	LOW GAS PRES. LVL-1 ALARM (209-4Y)	F11	LOW GAS PRES. LVL-2 ALARM (209-7R)
F4	LOW GAS PRES. LVL-1 ALARM (209-4B)	F12	LOW GAS PRES. LVL-2 ALARM (209-7Y)
F5	LOW GAS PRES. LVL-1 ALARM (209-5R)	F13	LOW GAS PRES. LVL-2 ALARM (209-7B)
F6	LOW GAS PRES. LVL-1 ALARM (209-5Y)	F14	LOW GAS PRES. LVL-1 ALARM (209-8R)
F7	LOW GAS PRES. LVL-1 ALARM (209-5B)	F15	LOW GAS PRES. LVL-1 ALARM (209-8Y)
F8	LOW GAS PRES. LVL-1 ALARM (209-6R)	F16	LOW GAS PRES. LVL-1 ALARM (209-8B)

TEST, MUTE, ACK., RST.

MBAS 11 ALARM ANNUNCIATOR

ANN4

F1	LOW GAS PRES. LVL-2 ALARM (208-1R/Y/B)	F9	LOW GAS PRES. LVL-2 ALARM (208-7R/Y/B)
F2	LOW GAS PRES. LVL-2 ALARM (208-2R/Y/B)	F10	LOW GAS PRES. LVL-2 ALARM (208-8R/Y/B)
F3	LOW GAS PRES. LVL-2 ALARM (208-3R/Y/B)	F11	LOW GAS PRES. LVL-2 ALARM (209-1R/Y/B)
F4	LOW GAS PRES. LVL-2 GCB CLOSE BLOCK & TRIP BLOCK (208-4R)	F12	LOW GAS PRES. LVL-2 ALARM (209-2R/Y/B)
F5	LOW GAS PRES. LVL-2 GCB CLOSE BLOCK & TRIP BLOCK (208-4Y)	F13	LOW GAS PRES. LVL-2 ALARM (209-3R/Y/B)
F6	LOW GAS PRES. LVL-2 GCB CLOSE BLOCK & TRIP BLOCK (208-4B)	F14	LOW GAS PRES. LVL-2 ALARM (209-4R/Y/B)
F7	LOW GAS PRES. LVL-2 ALARM (208-5R/Y/B)	F15	LOW GAS PRES. LVL-2 ALARM (209-5R/Y/B)
F8	LOW GAS PRES. LVL-2 ALARM (208-6R/Y/B)	F16	LOW GAS PRES. LVL-2 ALARM (209-6R/Y/B)

TEST, MUTE, ACK., RST.

MBAS 11 ALARM ANNUNCIATOR

ANN5

F1	LOW GAS PRES. LVL-2 ALARM (209-7R/Y/B)	F9	DS/ES/HES MOTOR O/L & CKT TROUBLE
F2	LOW GAS PRES. LVL-2 ALARM (209-8R/Y/B)	F10	220V DC CONTROL SUPPLY MCB OFF/TRIP
F3	GCB SPRING CHARGING INCOMP. MOTOR EXC. RUN	F11	S43RL SELECTOR SWITCH IN LOCAL
F4	GCB MOTOR OVER CURRENT	F12	S43RL SELECTOR SWITCH IN REMOTE
F5	GCB MOTOR SUPPLY FAIL	F13	EMERGENCY TRIP OPERATED
F6	GCB POLE DISCREPANCY	F14	DC SOURCE-I FAIL
F7	GCB SPRING CHARGED	F15	DC SOURCE-II FAIL
F8	DS/ES/HES OPERATION INCOMPLETE	F16	GCB TRIP-1 CKT. MCB OFF/TRIP

TEST, MUTE, ACK., RST.

MBAS 11 ALARM ANNUNCIATOR

ANN6

F1	GCB TRIP-2 CKT. MCB OFF/TRIP	F9	SPARE
F2	SPARE	F10	SPARE
F3	SPARE	F11	SPARE
F4	SPARE	F12	SPARE
F5	SPARE	F13	SPARE
F6	SPARE	F14	SPARE
F7	SPARE	F15	SPARE
F8	SPARE	F16	SPARE

TEST, MUTE, ACK., RST.

MBAS 11 ALARM ANNUNCIATOR

Bihar Transmission Business Group — Industry Sector — Noida-01

(ANUNLESH KUMAR) MANAGER/ELECT.-TSG

FORMAT NO. : SG 07 3 04 R0

ALL DIMENSIONS ARE IN MM & WEIGHTS ARE IN kg PER UNIT UNLESS OTHER WISE, SPECIFIED.

REFERENCE: - .....

ALL INFORMATION CONTAINED IN THIS DOCUMENT IS CONFIDENTIAL AND THE PROPERTY OF TOSHIBA TRANSMISSION & DISTRIBUTION SYSTEMS (INDIA) PRIVATE LIMITED. REPRODUCTION OF THIS IN ANY FORM IS TO BE DONE WITH THE SPECIFIC PERMISSION OF THE ORGANISATION.

REV	DETAILS OF MODIFICATION	DATE	REV.MARK	MODIFIED	CHECKED	APPROVED
01	AS PER CUST.COMMENTS	18.05.2024	SIGN / NAME			
00	FIRST ISSUE	06.02.2024	SIGN / NAME			

TOSHIBA — TRANSMISSION & DISTRIBUTION SYSTEMS (INDIA) PRIVATE LIMITED — SWITCHGEAR PRODUCTS DIVISION

CLIENT : ODISHA POWER TRANSMISSION CO.LTD.

PROJECT : 400/220kV GIS S.S AT ERSAMA, ODISHA & 400kV AIS FEEDER BAY EXTENSION AT DUBURI, ODISHA

CUSTOMER DRAWING NO. : TB-420-516-071-10A

PAGE DESCRIPTION : ANNUNCIATOR DESCRIPTION

BAY NAME : GA, INTERNAL ARRANGEMENT & SCHEMATICS OF LCP FOR 220KV ICT-2 & BUS SECTION (D08&D09)

DRAWING NO. : DEEUGBI69513007

APPROVED	K.IKEDA	K.I	06.02.2024
CHECKED	M.SREEDHAR	M.S	05.02.2024
DRAWN	K.MAHESH	K.M	03.02.2024
DESIGN	SRIDEVI.Y	S.Y	11.01.2024
	NAME	SIGN	DATE

SCALE : NTS

REV : 01

PAGE 17 / 114 PAGES