THDC INDIA LIMITED

(A Joint Venture of Govt. of India & Govt. of U.P.)

2X660 MW KHURJA STPP

TECHNICAL SPECIFICATION
FOR
ELEVATOR

SPECIFICATION NO.: PE-TS-475-502-A001

BHARAT HEAVY ELECTRICALS LIMITED
(A Govt. of India Undertaking)
POWER SECTOR
PROJECT ENGINEERING MANAGEMENT
NOIDA, U.P
INDIA

	2X660 MW KHURJA STPP ELEVATOR INDEX	SPECIFICATION No: PE-TS-475-502-A001	
		SECTION	
		REV. 00	APR 2021
		SHEET : 1 OF 1	

INDEX

SECTIONS	TITLE	Page No.
I	**SPECIFIC TECHNICAL REQUIREMENT**	4
IA	SPECIFIC TECHNICAL REQUIREMENT (MECHANICAL)	5
	INTENT OF SPECIFICATIONS/ SCOPE OF ENQUIRY	6-8
	SCOPE OF SUPPLY & SERVICES	9-18
	CUSTOMER SPECIFICATON FOR ELEVATOR	19-25
	GENERAL TECHNICAL REQUIREMENT	26-125
	FUNCTIONAL / PERFORMANCE / DEMONSTRATION GUARANTEE (AS APPLICABLE)	126-127
	QUALITY ASSURANCE	128-132
	PAINTING SPECIFICATION	133-138
	ANNEXURE-I- LIST OF MAKES	139-141
	ANNEXURE-II- MANDATORY SPARE LIST	142-144
	ANNEXURE-III- LIST OF TOOLS & TACKLES	145-146
	ANNEXURE-IV- DRAWING / DOCUMENT SUBMISSION SCHEDULE	147
	ANNEXURE-V- MAIN DRAWING LIST WITH SCHEDULE OF SUBMISSION	148
	ANNEXURE-VI- FORMAT FOR OPERATION AND MAINTENANCE MANUAL	149-151
	ANNEXURE-VII- SITE STORAGE AND PRESERVATION.	152-166
	ANNEXURE-VIII- PACKING PROCEDURE	167-183
	ANNEXURE-IX- CIVIL INPUT	184-186
IB	SPECIFIC TECHNICAL REQUIREMENT (ELECTRICAL)	187-188
	ELECTRICAL SCOPE BETWEEN BHEL AND VENDOR	189
	MOTOR DATASHEET A	190-191
	MOTOR DATASHEET C	192-193
	CUSTOMER SPECIFICATION FOR ELECTRICAL PART ➢ ELEVATOR-(ELECTRICALS) ➢ MOTORS ➢ LT POWER CABLES ➢ LT CONTROL CABLES ➢ CABLING EARTHING LIGHTNING AND PROTECTION ➢ LT SWITCHGEAR & LT BUSDUCT	194 195-197 198-207 208-214 215-221 222-246 247-256
	STANDARD MANUFACTURING QUALITY PLAN FOR MOTORS (UPTO 55 KW)	257-259
	CABLE SCHEDULE FORMAT	260
IC	DATA SHEET-A	261-264

	2X660 MW KHURJA STPP ELEVATOR INDEX	SPECIFICATION No: PE-TS-475-502-A001 SECTION REV. 00 APR 2021 SHEET : 2 OF 1

II	**STANDARD TECHNICAL SPECIFICATION REQUIREMENT**	265-270
IIA	STANDARD TECHNICAL SPECIFICATION REQUIREMENT (ELECTRICAL) ➢TECHNICAL SPECIFICATION FOR VVVF DRIVE FOR ELEVATOR	
III	LIST OF DOCUMENTS TO BE SUBMITTED WITH BID	272
	PRE BID CLARIFICATION SCHEDULE	273
	COMPLIANCE CUM CONFIRMATION CERTIFICATE	274-275
	ELECTRICAL LOAD LIST	276

SECTION - I
SPECIFIC TECHNICAL REQUIREMENT

SECTION – IA

SPECIFIC TECHNICAL REQUIREMENT-MECHANICAL

SCOPE OF ENQUIRY / INTENT OF SPECIFICATION

SCOPE OF ENQUIRY / INTENT OF SPECIFICATION

1.1 This specification includes, but not limited to design, engineering, material selection, manufacturing and assembly, inspection, testing at manufacturer's works, packing, forwarding and transportation to site, unloading, storage & handling at site, erection & commissioning, carrying out trial run and acceptance / functional guarantee test at site & final painting of passenger elevator for 2***X660 MW KHURJA STPP, U.P STATE*** and necessary accessories including supply of mandatory spares, erection and commissioning spares, special maintenance tools and tackles etc.

1.2 The contractor shall be responsible for providing all material, equipment & services, which are required to fulfil the intent of ensuring operability, maintainability, reliability and complete safety of the complete work covered under this specification, irrespective of whether it has been specifically listed herein or not. Omission of specific reference to any component / accessory necessary for proper performance of the equipment shall not relieve the responsibility of providing such facilities to complete the supply, erection and commissioning of the **Elevators** and its accessories.

1.3 It is not the intent to specify herein all the details of design and manufacture. However, the equipment shall conform in all respects to high standards of design, engineering and workmanship and shall be capable of performing the required duties in a manner acceptable to purchaser who will interpret the meaning of drawings and specifications and shall be entitled to reject any work or material which in his judgement is not in full accordance herewith.

1.4 The extent of supply under the contract includes all items shown in the drawings, notwithstanding the fact that such items may have been omitted from the specification or schedules. Similarly, the extent of supply also includes all items mentioned in the specification and /or schedules, notwithstanding the fact that such items may have been omitted in the drawing.

1.5 The general term and conditions, instructions to tenderer and other attachment referred to elsewhere are made part of the tender specification. The equipment materials and works covered by this specification is subject to compliance to all attachments referred to in the specification. The bidder shall be responsible for and governed by all requirements stipulated herein.

1.6 While all efforts have been made to make the specification requirement complete & unambiguous, it shall be bidders' responsibility to ask for missing information, ensure completeness of specification, to bring out any contradictory / conflicting requirement in different sections of the specification and within a section itself to the notice of BHEL and to seek any clarification on specification requirement in the format enclosed under Vol-III of the specification**.** In absence of any such clarifications, in case of any contradictory requirement, the more stringent requirement as per interpretation of Purchaser/Customer shall prevail and shall be complied by the bidder without any commercial implication on account of the same. Further in case of any missing information in the specification not brought out by the prospective bidders as part of pre-bid clarification, the same shall be furnished by Purchaser/ Customer as and when brought to their notice either by the bidder or by purchaser/ customer themselves. However, such requirements shall be binding on the successful bidder without any commercial & delivery implication.

1.7 The bidder's offer shall not carry any sections like clarification, interpretations and /or assumptions.

1.8 Deviations, if any, should be very clearly brought out clause by clause in the enclosed schedule; otherwise, it will be presumed that the vendor's offer is strictly in line with NIT specification.

1.9 In case all above requirements are not complied with, the offer may be considered as incomplete and would become liable for rejection.

1.10 Unless specified otherwise, all through the specification, the word contractor shall have same meaning as successful bidder /vendor and Customer/ Purchaser/Employer will mean BHEL and /or customer including their consultant as interpreted by BHEL in the relevant context.

1.11 The standard quality plan is included in this specification to enable the bidder to understand the extent of inspection and testing requirements to execute this job. The successful bidder has to follow the quality plan as minimum requirement during manufacturing and testing.

1.12 Site Visit before submission of offer.

Bidders shall make Site visit in order to familiarize themselves with existing condition of site before submitting the bid in order to make their offer complete. During detail engineering also, the successful bidder shall be responsible for the correctness of details wrt existing facility at site. Customer approval on any drawing having details of existing facility shall not be cited by the successful bidder a valid reason for any shortcoming in the work by them. BHEL shall also not entertain any cost implication for any lack of input data with regard to site during detail engineering.

1.13 Compliance cum confirmation certificate is to be accepted by bidder without any modification.

1.14 Other requirements

Successful bidder shall furnish detailed erection manual for each of the equipment supplied under this contract at least 3 months before the scheduled erection of the concerned equipment / component or along with supply of concerned equipment / component whichever is earlier.

Document approval by customer under Approval category or information category shall not absolve the vendor of their contractual obligations of completing the work as per specification requirement. Any deviation from specified requirement shall be reported by the vendor in writing and require written approval. Unless any change in specified requirement has been brought out by the vendor during detail engineering in writing while submitting the document to customer for approval, approved document (with implicit deviation) will not be cited as a reason for not following the specification requirement.

In case vendor submits revised drawing after approval of the corresponding drawing, any delay in approval of revised drawing shall be to vendor's account and shall not be used as a reason for extension in contract completion.

SCOPE OF SUPPLY & SERVICES, EXCLUSION AND TERMINAL POINTS.

1.0 Introduction

Passenger elevator shall be provided for access to various operating floors / platforms in TG building and Service building for 2X660 MW KHURJA STPP to facilitate movement of operating and maintenance personnel.

2.0 Scope of equipment supply and services

2.0.1 Design, Engineering, Manufacture, Inspection & Testing at manufacturer's works or at their sub-vendor's works, Painting at manufacturer's or at their sub-vendor's works, duly packed for transportation to site, delivery to site, storage and handling at site, Erection & Commissioning, carrying out trial run and Acceptance / functional tests at site & final painting of Passenger Elevators for 2 X 660 MW khurja STPP as listed below: -

Sl. no	Building	No. of elevators	Capacity	No. of landings	Total rise	Type	Speed
1	TG building	1 No.	884 Kg	Four including Ground. (0.0 m, 8.5 m, 17.0 m, and last landing at 25.5 m,	25.5 M	Conventional (passenger elevator)	1 M/s
2	Service Building	2 Nos.	884 Kg	Five including Ground. (0.0 m, 4.5 m, 9 m, 13.5 m, and last landing at 18 m,	18 M	Conventional (passenger elevator)	1 M/s

2.0.2 Elevator shall include but shall not be limited to the following: -

1) Elevator car with SS 304, 1.5 mm (min) thick sheet of hair line finish for TG and Service building.

2) Guide rails for car and counterweights.

3) Counterweight.

4) DCEM brakes.

5) Spring buffer for car and counterweight.

6) Driving arrangement including motor, gear box, sheaves etc.

7) All electrical equipment including power cable, control cable, controller panel, safety devices including push buttons, limit switches, safety switches, indicators etc.

8) Isolating switch / MCBs.

9) Car doors, car ceiling and hoist way doors of SS 304, 1.5 MM (min) thick sheet of hair line finish.

10) Car operating panel, digital control, car position indicator at all floors, luminous hall buttons, auto door operating mechanism, alarm bell, car light & car fan.

11) Intercom connection through EPABX or PA which shall be finalized during contract stage.

12) Ropes for hoisting.

13) Circuit breaker, switch fuse unit etc. in machine room for terminating the power supply cable (power supply cable provided by purchaser up to machine room level), other power/control and trailing cabling and equipment earthling.

14) Ladder in pits.

15) Emergency light with rechargeable battery.

16) All fixing materials require fixing rails, brackets, equipment including nuts and bolts.

17) Fascia plates (750 mm minimum) & sill angels.

18) Full length infra-red Curtain safety feature in door along with pressure limiter as an extra mechanical safety.

19) ELCB if required as per statutory requirement.

20) Any other equipment required to meet the requirement of local statuary and regulatory body and prevailing lift etc.

21) Car lighting, LED light fittings for illumination level of 100 lux on car floor.

22) Elevator shaft, pit cable conduit fixtures, switches 3 pin or as required by bidder during erection / maintenance purpose at every 3 m.

23) Mirror for the car rear panel.

24) Floor announcement cum music system to be provided.

25) Maintenance tools and tackles along with un-priced list with the offer.

26) Three (3) sided SS- mirror finish hand railing at suitable height.

27) Minor civil work including grouting as well as foundation bolt grouting as required during installation of elevator.

28) Scaffolding for erection.

29) Automatic rescue device with battery drive - Modern advanced electronic drive system of rescuing passenger trapped in an elevator shall be provided.

30) Emergency safety devices - The lift shall be provided with safety device attached to the lift car frame and sustaining the lift car up at governor tripping speed with full rated load in car.

31) All steel embedment for fixing landing doors / indicators etc. to the elevator well shaft and fascia plate shall be supplied by the bidder

32) Guide rails complete with supporting brackets for the car and counter weights.

33) Elevator drive machines complete with electric motor, reduction gear unit, suspension ropes, buffers for the cars and the counter weights and other drives and control mechanism. All foundation anchor bolts, sleeves, anchoring steels and any item required to complete the job satisfactorily shall be provided by the bidder. The bidder shall also provide for the grouting of anchor bolts, sleeves, anchoring steel etc. and other anchorages.

34) Any other steel works as well as all other accessories / components not specified in the technical specification but necessary for making the elevator complete.

35) All minor building works including the supply of steel items, associated with installations of equipments in the machine room hoist way, hoist way door, frames and elevator pit, shall form part of bidder's scope of supply, BHEL / customer will provide the elevator well complete with foundation and brick walls around the lift well together with overhead machine room. The machine room will be provided with RCC floor slab with necessary pockets for anchor bolts and slots.

36) Dummy landing/s, as required in case travel between two consecutive landings is more than 10 m, shall be considered by bidder in his offer.

37) Any other requirement stipulated by state statuary body and prevailing local lift act requirement shall also to be included by bidder in their scope.

38) Bidder shall use latest IS 14665 (all parts) for outline dimensions of elevator & shaft, installation, operation, maintenance & inspection and testing and for elevator components design.

39) Mandatory Spares:

A complete unused and new set of Mandatory Spare parts shall be supplied. The items supplied shall be of the best quality and specially protected against rusting in tropical climate. The minimum requirement of mandatory spare parts is listed in Annexure –II Section-C, volume II-B of this specification.

NOTES:

1) Flooring for all elevators shall be vitrified ceramic tiles of mat finish as indicated in the Data sheet.

2) Functional Guarantee test shall be carried out at site for over speed test and over load test, travel and hoist speed checks as per latest IS.

3) Car, landing door and car ceiling shall be of SS-304 sheet with thickness (min) 1.5 mm.

4) Min dimensions as specified in applicable IS 14665 (all five parts) shall be considered / provided for lift shaft / pit / car / M/c Room. Safety requirement shall be as per latest IS 14665 (Relevant part). Bidder to refer the layout attached in the specification for different buildings.

5) Elevators pit shall be bare pit (i.e. pit without any RCC block / pedestal for buffer for CAR & CWT). Accordingly, MS structure & buffer required for elevator resting shall be provided by bidders.

6) All Equipment's / facilities needed for erection & commissioning shall be in bidder's scope.

7) Bidder to note that all LT Power cables (Fixed power and control cables etc), Trailing cable and instrument / signal cable for elevator shall be as per electrical specification. Trailing cable shall be FRLS type (with strain bearing member).

8) Make of various bought out items & QAP shall subject to approval of BHEL / Customer during detail engineering stage without any commercial implication at contract stage.

9) Bidder shall supply erection and commissioning spares as required during E&C stage without any commercial implication.

10) Car frame and structure (guide brackets, supports, MS structure for buffer for CAR & CWT etc) shall be painted with epoxy based paint for all elevators.

11) Protection class for motor shall be IP 54 and main control panel shall be min IP 54 and elevator control shall be VVVF type. Push buttons, Car operating Panel, Landing Operating Panel, Landing door motor and other equipment shall be IP-54.

12) Factor of safety for rope shall be 12 (min).

13) All Landing door shall be fire rated for at min 2 hour or as per latest IS / as per the state statutory requirement whichever is more stringent.

14) Motor shall be S4 / S5 duty with insulation class F & temp rise limited to class B.

15) Bidder shall submit the following documents (min) for BHEL/customer approval during detail engineering stage: -

a) General arrangement of Elevator
b) Technical data sheet of elevator
c) Technical data sheet of motor along with power, control and trailing cable details
d) Wiring schematic diagram
e) MQP for elevator along with test procedure of various components.

16) Bidder shall comply to the quality requirements as enclosed with specification. Quality plan shall be submitted by the successful bidder for approval during detail engineering.

17) Bidder shall confirm that supply, installation and commissioning of elevator shall be completed within project schedule as indicated elsewhere from placement of intent / letter of intent.

18) Bidder shall be responsible for obtaining all necessary approval from statutory and regulatory body and lift inspector. However, purchaser will furnish required information time to time basis, if required.

19) Elevator shall be provided with AC VVVF type drive control system.

Bidder shall furnish the following documents only during tender stage as a part of technical bid. Any other technical documents furnished by bidder shall not be considered as the part of offer:-

1) Signed and stamped copy of electrical load list for each elevator
2) Signed and stamped copy of Deviation schedule (if any).
3) Signed and stamped copy of Compliance cum confirmation sheet.

Note: In case bidder fails to furnish any document specified above, bidder's offer shall be treated as incomplete and shall liable to be rejected.

3.0 SCOPE OF SERVICES

Scope of services will broadly include the followings:-

1) Complete erection, testing and commissioning including all testing and commissioning materials, consumables and other tools and tackles required for erection of complete elevator package.

2) Painting of all equipments / items within the battery limit.

3) Unloading, storage, handling and transportation at site for all items of elevator.

4) Minor civil and structural works shall be carried out by the bidder if required at site for which no additional commercial implication shall be entertained by BHEL.

5) Necessary consumables and instrumentation as required for inspection and testing at works as well as at site including pre-commissioning activities, if any, shall be arranged by the successful bidder at their own cost.

6) Functional testing of complete elevator package.

7) Preparation of civil input drawings including elevator pit, shaft, machine room etc.

8) Preparation of all necessary drawings / data sheets / documents / calculations as required for obtaining necessary local administration permits / approval from statutory authority and make arrangements for inspection and tests required thereby for necessary approval on behalf of the customer. Fees as required for obtaining approval from statutory bodies shall also be included in the scope of work of the bidder.

9) Any other service as required for making the installation complete in all respect and satisfactory erection and commissioning of the system.

10) Relevant requirements as per GCC, ECC & SCC.

11) Split Air conditioner of min 2 Ton capacity in the machine room which includes fans, air filter and accessories to prevent dust ingress in the machine room. However, successful bidder shall furnish the heat load calculation and capacity of air conditioner after considering all actual heat loads of elevator machine room during detail engineering stage for selection of final capacity of air conditioner.

12) 1/2 Kg CO_2/suitable type Fire extinguisher in bidder scope. Fixing arrangement shall be provided in Car accordingly.

4.0 Exclusion

1) Complete civil works for hoist way, machine room, pit complete with the side enclosure (brick / RCC), interconnecting platform (if any) and monorail beam.

2) Electric hoist with travelling trolley of 3T capacity to facilitate handling of equipment in the machine room.

3) Power supply cable (AC 415 V, 3 Ph, 50 Hz) up to machine room level. Further cabling (all cables including power, control and instrumentation as per tender specification) shall be provided by the bidder.

4) Electrical exclusion as per separate scope sheet attached in the specification.

5.0 Operation

Elevator shall have provision to meet followings operational requirements: -

a) Selective simplex / duplex collective, automatic operation with or without attendant through illuminated push button station located inside the lift car.

b) Door operating shall be automatic door operation and electronic door protection system for opening / closing of car and landing doors.

c) Bidder shall provide car operating panel with luminous buttons, car position indication in car (both visual and audio) combined with direction arrows, overload warning indicator, battery operated alarm bell and emergency light and fan and hands free speaker telephone set with suitable battery, charger and controls.

d) Bidder shall provide emergency indicator to indicate the location of elevator in case of elevator being stuck up between the floors through automatic flashers/ display (both audio and visual as out of service).

e) Two (2) push buttons, one for upward movement and the other for downward movement at each intermediate landing and one (1) push button at each terminal landing shall be provided in order to call the car. Digital hall position indicator at all floors, tell lights at all floors shall also be provided by the bidder.

f) All fixtures shall be in stainless steel face plates.

g) Push buttons shall be fixed in the car for holding the door open for any length of time required.

h) All other safety / protection / operation interlocks as required by IS – 14665 (all parts) latest edition.

6.0 Electric Motor

The driving motors shall conform to IS 325 and suitable for variable voltage variable frequency (VVVF) application. All motors shall be squirrel cage induction type, suitable for operation at 415 V (+/- 10% variation), 3 Phase, 3 wire, 50 Hz (+3% to -5% variation) supply. Motors shall be provided with class F insulation & temp rise limited to class 130 (B).

7.0 Controls

The control shall be variable voltage and variable frequency type and shall provide smooth and constant acceleration and retardation under all conditions of operation. Suitable control panels shall be provided in the machine room. The lift will be automatically stopped by upper and lower terminal switches. The elevators will have an emergency stop switch, limit switches and other safety devices according to statutory rule.

8.0 Cables and wirings

The circular trailing cables shall be either in accordance with IS 4289 Part-I (elastomer insulated) or IS 4289 Part-II (PVC insulated). The flat type trailing cable s if offered shall be in accordance with IEC 60227-6. The voltage grade shall be 1100 V.

All wiring / cabling between the equipments in the lift machine room and that between the machine room and equipment in the lift well and at the landing shall be wired in HDP conduits / galvanised steel conduits to be supplied by the bidder. Alternatively, armoured cables may be used. However, bidder shall refer detailed specification of cables / wirings in the specification- Electrical portion.

9.0 Earthing

The elevator structures and all electrical equipments, including metal conduits shall be effectively earthed with the earth conductors provided in the machine room as per IS 3043.

10.0 <u>DESIGN CRITERIA</u>

The design criteria and equipment specification will be as follows:

i) The rated speed will be 1.0 m/sec. Proper allowance will be made for impact and wear and the factor of safety for rope shall not be less than twelve (12) or as per IS 14665 (all parts). The suspension wire rope will confirm to IS-14665 or approved equivalent international standard.

ii) The lift will be providing with automatic travelling device which will take care of overrun and under run of the car and rope stretch that the car floor is within 6.0 mm from the landing level at the floors while in operation.

iii) The lift will be equipped with upper and lower terminal switches arranged to stop the car automatically within the limit of the top car clearance and bottom run-by, from the any normal operating speed.

iv) The elevator car shall be provided with SS-304 sheet fabricated, hair line finished to approved shade (including landing doors of the car). Vitrified ceramic tile of matt finish flooring as indicated in the data sheet - A, concealed fan and indirect lighting, emergency lighting, intercom, car position and travel direction indicator.

v) As the elevator is to provide service in a power station, it is necessary for the equipment to be specially coated (painted). This will include application of anticorrosive paint as applicable. The electrical equipment will have enclosures meeting degree of protection as covered under electrical specification.

vi) The elevator as a whole will comply with relevant Indian Standard i.e. 14665 or approved international standard. The outline dimensions of electric lift shall meet the requirements of IS 14665 (latest edition).

vii) The elevator shall be provided with AC VVVF type drive control system.

viii) Doors are automatic, center opening with emergency key opening at all landings, horizontal sliding type for car as well as for hoist way. Trap door for each elevator in machine room shall be provided by civil contractor as per IS-14665 (latest edition).

11.0 Other Technical Requirements

1) Characteristic curves of all motors shall be furnished by the bidder during detail engineering stage for approval showing torque, speed, current and voltage.

2) Electrical requirements shall be as per requirements enclosed elsewhere in the specification.

3) Complete elevator installation shall be in accordance with the requirements of concerned approving authority.

4) In case of any contradictory requirement amongst the various clauses within the specification and clarifications not having been sought by the bidders, the most stringent requirement as per interpretation of BHEL's engineer shall be final and binding on the bidder for which BHEL will not entertain any commercial implication.

5) Data sheets of various items shall be prepared by the bidder and shall be submitted to BHEL / customer / consultant for approval after placement of order and any changes required by BHEL / customer / consultant for the same shall be incorporated and adhered by the bidder without any commercial implications.

6) GA drawing indicating design data, material of construction etc. shall be prepared by the bidder during detail engineering stage based on specification / contractual requirement and there should be no commercial implication on account of finalization of the drawings and documents.

7) O & M manual shall be furnished to BHEL / customer / consultant for approval during detailed engineering stage.

8) Field quality plan / quality assurance plan / check list shall be prepared by the bidder for each item of elevator and shall be submitted to BHEL / customer / consultant for approval after placement of order and any changes required by BHEL / customer / consultant for the same shall be incorporated and adhered by the bidder without any commercial implications.

9) All possible efforts shall be made by the bidder to get the approval of drawings and documents from BHEL / customer / consultant at the earliest and the documents prepared / generated by them or their sub-vendors shall be checked by their competent authority before submission to BHEL.

10) Revision made by the bidder in any drawings and documents shall be highlighted by indicating the no. of revisions in a triangle without fail so that the minimum time is required by BHEL to review the drawings and documents.

11) Bidder to note that all the drawings shall be prepared in Auto Cad - 2010 version and required number of hardcopies and soft copies shall be furnished to BHEL during detailed engineering stage. Exact requirement of number of hard copies and soft copies of all drawings and documents as required by BHEL / customer / consultant shall be informed to the successful bidder during detail engineering stage and bidder to furnish the same for which no additional cost shall be entertained.

12) 21 days' time is required by BHEL to offer their comments on the drawings and documents being submitted by the bidder (during detailed engineering stage in the event of L.O.I being placed) from the date of receipt.

13) Civil works will be provided by BHEL / customer. Hence, bidder has to furnish the civil inputs in time. Bidder has to carry out the rectification in the civil works in the event of any changes in the civil input data furnished by them or delay in submission of input data by them. Bidder to furnish the civil foundation drawing along with the loading data for approval during detailed engineering stage showing / indicating the followings:-

a) Scope of work by BHEL and bidder shall be indicated with different legend or in the form of note.

b) Recommended locations of earthing pads.

c) Civil loads along with detailed calculation of loading

d) Details of pockets / cut outs as required for anchor bolts.

14) Bidder to depute competent designer (s) at BHEL's office during detailed engineering stage to discuss drawings and other technical documents as and when required by BHEL. However, minimum seven (7) days' notice shall be served for the same.

15) All the drawings which are required to be furnished to BHEL during detailed engineering stage shall include technical parameters, details of paints, BOQ / BOM etc in tabular form indicating all components including bought out items and their quantity, material of construction indicating its applicable code / standard, weight, make etc.

16) All drawings and documents including general arrangement drawing, data sheet, calculation etc. shall be furnished to BHEL during detailed engineering stage and shall include / indicate the following details for clarity w.r.t. inspection, construction, erection and maintenance etc.: -

a) All drawings and documents shall bear BHEL's title block and drawing / document number. However, BHEL's drawing / document numbering scheme shall be furnished to the successful bidder after the placement of L.O.I.

b) All drawings and documents shall indicate the list of all reference drawings including general arrangement.

c) All drawings shall include / show plan, elevation, side view, cross - section, skin section, blow - up view, all major self manufactured and bought out items shall be labeled and included in BOQ / BOM in tabular form.

d) Specification / schedule of painting shall be made as a part of general arrangement drawing of each item indicating at least three (3) makes.

17) Bidder to assess the capability of their sub-vendors in terms of preparation of drawings, calculations, documents, quality assurance, supply of material etc. as per project schedule before placing the order on them. No deviations shall be entertained.

18) Bidder to furnish prices and unit price of each item of proposed system as per BHEL's price format only along with the final price bid.

19) Bidder shall check that specifications of all the items are available in the NIT specification. However, in the event of absence of specification for any item, bidder will approach BHEL to furnish the specification of missing items and new specification will be adhered by the bidder for which no commercial implication shall be entertained by BHEL.

20) Bar chart, list of drawings and documents including data sheet, manual calculation, quality plan, field quality plan, PG test procedure, list of sub – vendors (mechanical, C & I and erection and commissioning), technical specification and material of construction, painting specification / schedule, dispatch schedule etc. of various items as required by BHEL / customer / consultant shall be submitted to BHEL / customer / consultant during detail engineering stage for approval and the approved drawings / documents shall be adhered by the bidder without any commercial implication.

21) List of commissioning spares and tools and tackles in terms of numbers shall be furnished by the bidder along with the offer.

22) "Technical deviations" shall be clearly indicated in bidder's offer in prescribed format only.

23) All drawings shall be prepared as per BHEL's title block and bear BHEL's drawing No. and customer / consultant's drawing no; which will be forwarded to the successful bidder during detail engineering stage.

CUSTOMER SPECIFICATION FOR ELEVATOR

SUB–SECTION – A-8

SERVICE ELEVATORS, OTHER CRANES & HOISTS INCLUDING TEMPORARY ELEVATOR FOR TG HALL

SERVICE ELEVATORS, CRANE, HOIST & MONORAIL

1.00.00 SERVICE ELEVATORS

1.01.00 DESIGN CRITERIA AND OPERATIONAL SPECIFICATION

1.01.01 **Design**

Elevator shall be of conventional type for Service Building and TG building. The elevator shall meet the quality of international standard. The quality of glass panel on rear should be of highest grade from safety point of view and should meet the best standard.

1.01.02 No. of floors to be served shall be as per the specification and tender drawing of the Employer. Bidders shall quote variation in price for addition/deletion of one landing level in the relevant schedule of Forms and Procedures. However, bidder shall quote for above indicated landing levels in his base offer. No. of floors and landing elevations are tentative only. The final landing elevations for all buildings shall be subject to approval by the Employer after award.

1.01.03 Elevators shall be designed based on following criteria:

i)	Design/construction/installation codes.	:	Latest edition of IS: 14665 (all parts)
ii)	Load carrying capacity	:	a) 884 kgs. (equivalent to 13 persons) for passenger elevator for service building and TG building.
iii)	Rated speed	:	1.0 m/sec.
iv)	Position of machine room	:	Directly above the elevator shaft.
v)	Machine room	:	Split air conditioner of minimum 2T capacity per elevator shall be provided by bidder.

1.02.00 **CONSTRUCTION**

Construction of the elevators shall specifically meet all requirements of the codes indicated and shall have following additional features:

i)	Flooring of Cabin	:	Vitrified ceramic tiles of mat finish.
ii)	Car enclosure & car panels	:	Stainless Steel
iii)	Handrails on 3 sides	:	Mirror Stainless Steel

iv)	False ceiling	:	Powder painted (if the material of construction of false ceiling is other than SS 304.)
v)	Car opening & Hoist way opening	:	Protected by central opening sliding Stainless Steel door
vi)	CABIN ACCESSORIES	:	The following accessories shall be provided : a) Recessed LED light fittings on car floor. b) Car control station c) Emergency stop switch. d) 5/15A, 3 pin plug socket with switch on top of lift car. e) Switches with Braille characters.

1. AUTOMATIC RESCUE DEVICE (ARD) - (BATTERY DRIVE):

Bidder to provide a modern Advanced electronic drive system of "RESCUING Passenger Trapped in a ELEVATOR".

2. EMERGENCY SAFETY DEVICES :

Safety device in form of limit switches are placed below the lift car to stop and sustain the lift car. Further, safety governors are also installed on sides of car which come in operation during free fall of elevator or when speeds are higher than trip-ping speeds. During above mentioned situations safety governor gradually hold the guiderail and bring the elevator to complete rest.

3. Elevator shall have Floor announcement system & Braille switches

1.02.01 All steel embedment for fixing landing doors/indicators etc. to the Elevator well shaft and fascia plate shall be supplied by the Bidder.

1.02.02 Guide rails complete with supporting brackets for the car and counter weights. Bidder to take care of granite tiles (approx 80 kg) to be provided for cabin flooring in selecting counter weights.

1.02.03 Elevator drive machines complete with electric motor, reduction gear unit, suspension ropes, buffers for the cars and the counter weights and other drive and control mechanism. All foundation anchor bolts, sleeves, anchoring steel and any item required to complete the job satisfactorily shall be provided by the bidder. The bidder shall also provide for the grouting of anchor bolts, sleeves, anchoring steel, etc. and other anchorages

1.02.04 Any other steel works as well as all other accessories/components not specified in the specification but necessary for making the Elevator complete.

1.02.05 All building work including the supply of steel items, associated with installation of equipment in the machine room hoist way, hoist way door, frames and Elevator pit, shall form part of bidders scope of service, Bidder shall also provide the Elevator-well complete with foundation and brick walls around the lit-well together with overhead machine room. The machine room will be provided with R.C.C. floor slab with necessary pockets for anchor bolts and slots.

1.03.00 **OPERATION**

1.03.01 Elevator shall have provisions to meet following operational requirements :

a) Selective Duplex collective, automatic operation with or without attendant through illuminated push button station located inside the lift car.

b) Door operating shall be automatic door operation and electronic door protection system for opening/closing of car and landing doors.

c) Bidder shall provide car operating panel with luminous buttons, car position indication in car (both visual and audio) combined with direction arrows, overload warning indicator, battery operated alarm bell and emergency light and fan & hands free speaker telephone set with suitable battery, charger & controls.

d) Bidder shall provide emergency indicator to indicate the location of elevator in case of elevator being stuck up between the floors through automatic flashers (both audio & visual)

e) Bidder shall provide electronic door detector (Infra red curtain type).

f) Two push buttons, one for upward movement and the other for downward movement at each intermediate landing and one push button at each terminal landing shall be provided in order to call the car. Digital hall position indicator at all floors, tell lights at all floors shall also be provided by the bidder.

g) For facilitating the movement of visually & hearing impaired persons, hall lantern and car arrival chimes shall be provided.

h) All fixtures shall be in stainless steel face plates.

i) Push buttons shall be fixed in the car for holding the doors open for any length of the time required.

j) All other safety/protection/operation interlocks as required by IS:14665 (latest edition).

1.04.00 **Elevator Electricals:**

1.04.01 **Electric motor:**

The driving motors shall conform to I.S 325 and suitable for the Variable Voltage Variable Frequency (VVVF) application. All motors shall be squirrel cage induction type, suitable for operation at 415V (+/- 10% variation) , 3 phase, 3 wire, 50HZ (+3% to -5% variation) supply. Motors shall be provided with thermal class 130 (B) or better insulation.

1.04.02 **Controls:**

The controls shall be Variable Voltage and Variable frequency type and shall provide smooth and constant acceleration and retardation under all conditions of operation. Suitable control panel shall be provided in the machine room.

1.04.03 **Cables and wiring:**

All the cables except trailing cables shall be as per IS:1554-1 or IS-7098-I. the PVC outer sheath of these cables shall be flame retardant, low smoke (FRLS) type with the following FRLS properties.

a) Oxygen index of min. 29 (as per IS:10810 Part-58)

b) Acid gas emission of max. 20% (as per IEC-754-I).

c) Smoke density rating shall not be more than 60% (as per ASTMD-2843).

The circular trailing cables shall be either in accordance with IS 4289 Part-I (Elastomer insulated) or IS-4289 Part-II (PVC insulated). The flat type trailing cables if offered shall be in accordance with IEC-60227-6.

All wiring / cabling between the equipments in the lift machine room and that between the machine room and equipments in the lift well and at the landings shall be wired in HDP conduits/ galvanized steel conduits to be supplied by the contractor. Alternatively armored cables may be used.

1.04.04 **Earthing:**

The elevator structures and all Electrical equipment, including metal conduits shall be effectively earthed with the earth conductors provided in the machine room as per IS: 3043.

DATA SHEET

i)	Type of services	:	Passenger
ii)	Load carrying capacity	:	As per specification
iv)	Rated speed		One (1) m/s
v)	Total Travel	:	TG hall- As per layout Service Building- As per layout
vi)	No. of floor to be served	:	TG hall & Service Building: - To be decided during detailed engineering.
vii)	Method of control	:	Variable voltage variable frequency (VVVF)
viii)	Position of M/c room	:	Directly above lift shaft
Ix)	Size of platform	:	As per IS14665 latest.
x)	Size of lift well	:	-do-
xiii)	Specification code	:	As per IS:14665 (5 parts) (Latest Edition).
xiv)		:	According to the IS 1893-1977

	2X660 MW KHURJA STPP TECHNICAL SPECIFICATION FOR ELEVATOR SPECIFIC TECHNICAL REQUIREMENT -MECHANICAL	SPECIFICATION No: PE-TS-475-502-A001 SECTION IA REV. 00 APR 2021

GENERAL TECHNICAL REQUIREMENT

(AS PER APPLICABILITY OF SCOPE DEFINED IN SECTION IA)

PART – C

GENERAL TECHNICAL REQUIREMENT (GTR)

PART - C

CONTENTS

Clause No.	Description
1.00.00	Introduction
2.00.00	Brand Name
3.00.00	Base Offer & Alternate Proposals
4.00.00	Completeness of Facilities
5.00.00	Codes & Standards
6.00.00	Equipment Functional Guarantee
7.00.00	Design of Facilities/ Maintenance & Availability Considerations
8.00.00	Documents, Data and Drawings to be furnished by Contractor
9.00.00	Quality Assurance Programme
10.00.00	Pre-commissioning and Commissioning Facilities
11.00.00	Guarantee Tests
12.00.00	Taking over
13.00.00	Training Of Employer's Personnel
14.00.00	Safety Aspects During Construction And Erection
15.00.00	Noise Level
16.00.00	Packaging and Transportation
17.00.00	Electrical Enclosure
18.00.00	Instrumentation and Control
19.00.00	Electrical Noise Control
20.00.00	Instrument Air System
21.00.00	Tapping Points for Measurements
22.00.00	System Documentation
23.00.00	Maintenance Manuals of Electronic Modules
Annexure - I	
Annexure - II	
Annexure - III	
Annexure - IV	
Annexure - V	

GENERAL TECHNICAL REQUIREMENTS
(AS PER APPLICABILITY OF SCOPE DEFINED IN SECTION IA)

1.00.00 **INTRODUCTION**

This part covers technical requirements which will form an integral part of the Contract. The following provisions shall supplement all the detailed technical requirements brought out in Section-VI, the Technical Specification and the Technical Data Sheets.

2.00.00 **BRAND NAME**

Whenever a material or article is specified or described by the name of a particular brand, manufacturer or vendor, the specific item mentioned shall be understood to be indicative of the function and quality desired, and not restrictive, other manufacturer's products may be considered provided sufficient information is furnished to enable the Employer to determine that the products proposed are equivalent to those named.

3.00.00 **BASE OFFER & ALTERNATE PROPOSALS**

The Bidder's proposal shall be based upon the use of equipment and material complying fully with the requirements specified herein. It is recognized that the Contractor may have standardized on the use of certain components, materials, processes or procedures different than those specified herein. Alternate proposals offering similar equipment based on the manufacturer's standard practice will also be considered, provided the base offer is in line with technical specifications and such proposals meet the specified design standards and performance requirement and are acceptable to the Employer. Sufficient amount of information for justifying such proposals shall be furnished to Employer along with the bid to enable the Employer to determine the acceptability of these proposals.

4.00.00 **COMPLETENESS OF FACILITIES**

4.01.00 Bidders may note that this is a contract inclusive of the scope as indicated elsewhere in the specification. Each of the plant shall be engineered and designed in accordance with the specification requirement. All engineering and associated services are required to ensure that a completely engineered plant is provided.

4.02.00 All equipments furnished by the Contractor shall be complete in every respect, with all mountings, fittings, fixtures and standard accessories normally provided with such equipment and/or those needed for erection, completion and safe operation of the equipment and for the safety of the operating personnel, as required by applicable

codes, though they may not have been specifically detailed in the respective specifications, unless included in the list of exclusions.

All same standard components/ parts of same equipment provided, shall be interchangeable with one another.

4.03.00 For the C&I systems, the Contractor shall be required to provide regular information about future upgrades and migration paths to the Employer.

5.00.00 **CODES & STANDARDS**

5.01.00 In addition to the codes and standards specifically mentioned in the relevant technical specifications for the equipment / plant / system, all equipment parts, systems and works covered under this specification shall comply with all currently applicable statutory regulations and safety codes of the Republic of India, as well as of the locality where they will be installed, including the following:

(a.) Indian electricity act

(b.) Indian electricity rules

(c.) Indian Explosives Act

(d.) Indian Factories Act and State Factories Act

(e) Indian Boiler Regulations (IBR)

(f.) Regulations of the Central Pollution Control Board, India

(g.) Regulations of the Ministry of Environment & Forest (MoEF), Government of India

(h) Pollution Control Regulations of Department of Environment, Government of India

(i.) State Pollution Control Board.

(j.) Rules for Electrical installation by Tariff Advisory Committee (TAC).

(k.) Building and other construction workers (Regulation of Employment and Conditions of services) Act, 1996

(l.) Building and other construction workers (Regulation of Employment and Conditions of services) Central Rules, 1998

(m.) Explosive Rules, 1983

(n.) Petroleum Act, 1984

(o.) Petroleum Rules, 1976,

(p.) Gas Cylinder Rules, 1981

(q.) Static and Mobile Pressure Vessels (Unified) Rules, 1981

(r.) Workmen's Compensation Act, 1923

(s.) Workmen's Compensation Rules, 1924

(t.) NTPC Safety Rules for Construction and Erection

(u.) NTPC Safety Policy

(v.) Any other statutory codes / standards / regulations, as may be applicable.

5.02.00 Unless covered otherwise in the specifications, the latest editions (as applicable as on date of bid opening), of the codes and standards given below shall also apply:

(a) Bureau of Indian Standards (BIS)

(b.) Japanese Industrial Standards (JIS)

(c.) American National Standards Institute (ANSI)

(d.) American Society of Testing and Materials (ASTM)

(e.) American Society of Mechanical Engineers (ASME)

(f.) American Petroleum Institute (API)

(g.) Standards of the Hydraulic Institute, U.S.A.

(h.) International Organisation for Standardization (ISO)

(i.) Tubular Exchanger Manufacturer's Association (TEMA)

(j.) American Welding Society (AWS)

(k.) National Electrical Manufacturers Association (NEMA)

(l.) National Fire Protection Association (NFPA)

(m.) International Electro-Technical Commission (IEC)/European Norm (EN)

(n.) Expansion Joint Manufacturers Association (EJMA)

(o.) Heat Exchange Institute (HEI)

p) IEEE standard

q) JEC standard

5.03.00 Other International/ National standards such as DIN, VDI, BS, GOST etc. shall also be accepted for only material codes and manufacturing standards, subject to the Employer's approval, for which the Bidder shall furnish, adequate information to justify that these standards are equivalent or superior to the standards mentioned above. In all such cases the Bidder shall furnish specifically the variations and deviations from the standards mentioned else where in the specification together with the complete word to word translation of the standard that is normally not published in English.

5.04.00 As regards highly standardized equipments such as Steam Turbine and Generator, National /International standards such as JIS, DIN, VDI, ISO, SEL, SEW, VDE, IEC & VGB shall also be considered as far as applicable for Design, Manufacturing and Testing of the respective equipment. However, for those of the above equipment not covered by these National / International standards, established and proven standards of manufacturers shall also be considered.

5.05.00 In the event of any conflict between the codes and standards referred to in the above clauses and the requirement of this specification, the requirement of Technical Specification shall govern.

5.06.00 Two (2) English language copies of all-national and international codes and/or standards used in the design of the plant, equipment, and structural works shall be provided by the Contractor to the Employer within two calendar months from the date of the Notification of Award.

5.07.00 In case of any change in codes, standards & regulations between the date of bid opening and the date when vendors proceed with fabrication, the Employer shall

have the option to incorporate the changed requirements or to retain the original standard. It shall be the responsibility of the Contractor to bring to the notice of the Employer such changes and advise Employer of the resulting effect.

6.00.00 **EQUIPMENT FUNCTIONAL GUARANTEE**

6.01.00 The functional guarantees of the equipment under the scope of the Contract is given in Section-VI Part - A & B of technical specification .These guarantees shall supplement the general functional guarantee provisions covered under General Conditions of Contract.

6.02.00 Liquidated damages for shortfall in meeting functional guarantee(s) during the performance and guarantee tests shall be assessed and recovered from the Contractor as specified elsewhere in this specification.

7.00.00 **DESIGN OF FACILITIES/ MAINTENANCE & AVAILABILITY CONSIDERATIONS**

7.01.00 **Design of Facilities**

All the design procedures, systems and components proposed shall have already been adequately developed and shall have demonstrated good reliability under similar conditions elsewhere.

The Contractor shall be responsible for the selection and design of appropriate equipments to provide the best co-ordinated performance of the entire system. The basic requirements are detailed out in various clauses of the Technical Specifications. The design of various components, assemblies and subassemblies shall be done so that it facilitates easy field assembly and dismantling. All the rotating components shall be so selected that the natural frequency of the complete unit is not critical or close to the operating range of the unit.

7.02.00 **Maintenance and Availability Considerations**

Equipment/works offered shall be designed for high availability, low maintenance and ease of maintenance. The Bidder shall specifically state the design features incorporated to achieve high degree of reliability/ availability and ease of maintenance. The Bidder shall also furnish details of availability records in the reference plants stated in his experience list.

Bidder shall state in his offer the various maintenance intervals, spare parts and man-hour requirement during such operation. The intervals for each type of maintenance namely inspection of the turbine and equipments, inspection of the

steam path and the minor and major overhauls shall be specified in terms of running hours, clearly defining the spare parts and manhour requirement for each stage.

Lifting devices i.e. hoists and chain pulley jacks, etc. shall be provided by the contractor for handling of any equipment or any of its part having weight in excess of 500 Kgs during erection and maintenance activities.

Lifting devices like lifting tackles, slings, etc. to be connected to hook of the hoist / crane shall be provided by the contractor for lifting the equipment and accessories covered under the specification.

8.00.00 **DOCUMENTS, DATA AND DRAWINGS TO BE FURNISHED BY CONTRACTOR**

8.01.00 Bidders may note that this is a contract inclusive of the scope as indicated elsewhere in the specification. Each of the plant and equipment shall be fully integrated, engineered and designed to perform in accordance with the technical specification. All engineering and technical services required to ensure a completely engineered plant shall be provided in respect of mechanical, electrical, control & instrumentation, civil & structural works as per the scope.

Each main and auxiliary equipment/item of the plant including instruments shall be assigned a unique tag number. The assignment of tag numbers shall be in accordance with KKS system. In all drawings/documents/data sheet etc. KKS tag number of the equipment/item/instrument etc. shall be indicated.

The Contractor shall furnish engineering data/drawings. in accordance with the schedule of information as specified in Technical Specification and Technical data sheet.

8.02.00 The number of copies/prints/CD-ROMs/manuals to be furnished for various types of documents is given in Annexure-I to this Part-C, Section-VI of the Technical Specification.

8.03.00 The documentation that shall be provided by the Contractor is indicated in thvarious sections of specification. This documentation shall include but not be limited to the following :

8.03.01 (a.) **BASIC ENGINEERING DOCUMENTATION**

Prior to commencement of the detailed engineering work, the Contractor shall furnish a Plant Definition Manual within 12 weeks from the date of the Notification of Award. This manual shall contain the following as a minimum:

i. System description of all the mechanical, electrical, control & instrumentation & civil systems.

ii. Technology scan for each system / sub-system & equipment.

iii. Selection of appropriate technology / schemes for various systems/ subsystems including techno-economic studies between various options.

iv. Optimization studies including thermal cycle optimization.

v. Sizing criteria of all the systems, sub-systems including various piping systems/ equipments/ structures/ equipment foundations alongwith all calculations justifying and identifying the sizing and the design margins.

vi. Schemes and Process & Instrumentation diagrams for the various systems/ sub-system with functional write-ups.

vii. Operation Philosophy and the control philosophy of the equipments / system covered under the scope.

viii. General Layout plan of the power station incorporating all facilities in Contractor's as well as those in the Employer's scope. This drawing shall also be furnished in the form of CD-ROMs to the Employer for engineering of areas not included in bidder's scope.

ix. Basic layouts and cross sections of the TG building (various floor elevations), and other areas included in the scope of thebidder.

x. Documentation in respect of Quality Assurance System as listed out elsewhere in this specification.

The successful bidder shall furnish within three (3) weeks from the date of Notification of Award, a list of contents of the Plant Definition Manual (PDMs) including techno-economic studies, which shall then be mutually discussed & finalised with the Employer.

(b) **DETAILED ENGINEERING DOCUMENTS**

i. General layout plan.

ii. Layouts, general arrangements, elevations and cross-sections drawings for all the equipment and facilities of the plant.

iii. Flow diagrams, Process & Instrumentation Diagrams alongwith write-up and system description.

iv. Start-up curves for turbine, for various start-ups, viz. cold, warm and hot start-up.

v. Piping isometric, composite layout and fabrication drawings.

vi. Piping engineering diagrams, pipe and fittings schedules, valve schedules, hanger and support schedules, insulation schedules.

vii. Technical data sheets for all bought out and manufactured items. Contractor shall use the NTPC specifications as a base for placement of orders on their sub-vendors.

viii. Detailed design calculations for components, system/sub-system, piping etc., wherever applicable including sizing calculations for all auxiliaries like BFPs, CEPs, Heaters/ Deaerators, Condensers, vacuum pumps etc.

ix. Transient, hydraulic and thermal stress analysis of piping and system wherever applicable & input and output data alongwith stress analysis isometrics showing nodes.

x. Thermal cycle information (heat balance diagrams, condenser and heat exchanger thermal calculations etc.).

xi. Characteristic Curves/ Performance Correction Curves. Hydraulic & Mechanical design calculations for condensers & heaters.

xii. Comprehensive list of all terminal points which interface with Employer's facilities giving details of location, terminal pressure, temperature, fluid handled & end connection details, forces, moments etc.

xiii. Power supply single line diagram, block logics, control schematics, electrical schematics, etc.

xiv. Protection system diagrams and relay settings.

xv. Interconnection diagrams.

xvi. Cable routing plan.

xvii. Instrument schedule, measuring point list, I/O list, Interconnection & wiring diagram, functional write-ups, installation drawings for field mounted instruments, logic diagrams, control schematics, wiring and tubing diagrams of panels and enclosures etc. Drawings for open loop and close loop controls (both hardware and software). Motor list and valve schedule including type of actuator etc.

xviii. Alarm and annunciation list / Sequence of Event (SOE) list and alarms & trip set points.

xix. Sequence and protection interlock schemes.

xx. Type test reports and power system stability study report.

xxi. Control system configuration diagrams.

xxii. Detailed DDCMIS system manuals

xxiii. Detailed flow chart for digital control system.

xxiv. Mimic diagram layout, Assignment for other application engg.

xxv. Civil & Structural works drawings and documents for all structures, facilities, foundations, underground and overground works and super-structural works as included in the scope of the Bidder.

xxvi. Model study reports wherever applicable.

xxvii. Functional & guarantee test procedures and test reports.

xxviii. Documentation in respect of Quality Assurance System as listed out elsewhere in this specification.

xxix. Documentation in respect of commissioning as listed out elsewhere in this specification.

The Contractor while submitting the above documents / drawings for approval / reference as the case may be, shall mark on each copy of submission the reference letter alongwith the date vide which the submissions are made.

8.03.02 **INSTRUCTION MANUALS**

The Contractor shall submit to the Employer, draft instruction manuals for all the equipments covered under the Contract by the end of one year from the date of his acceptance of the Letter of Award.The Instruction manuals shall contain full details required for erection, commissioning, operation and maintenance of each equipment. The manual shall be specifically compiled for this project. After finalization and approval of the Employer the Instruction Manuals shall be submitted as indicated in Annexure-I. The Contract shall not be considered to be completed for purposes of taking over until the final Instructions manuals have been supplied to the Employer. The Instruction Manuals shall comprise of the following.

(a.) **Erection Manuals**

The erection manuals shall be submitted atleast three (3) months prior to the commencement of erection activities of particular equipment/system. The erection manual should contain the following as a minimum.

a) Erection strategy.

b) Sequence of erection.

c) Erection instructions.

d) Critical checks and permissible deviation/tolerances.

e) List of tool, tackles, heavy equipments like cranes, dozers, etc.

f) Bill of Materials

g) Procedure for erection .

h) General safety procedures to followed during erection/installation.

i) Procedure for initial checking after erection.

j) Procedure for testing and acceptance norms.

k) Procedure / Check list for pre-commissioning activities.

l) Procedure / Check list for commissioning of the system.

m) Safety precautions to be followed in electrical supply distribution during erection

(b.) **Operation & Maintenance Manuals**

a) The manual shall be a two rim PVC bound stiff sided binder able to withstand constant usage or where a thicker type is required it shall have locking steel pins, the size of the manual shall not be larger than international size A3. The cover shall be printed with the Project Name, Services covered and Volume / Book number Each section of the manual shall be divided by a stiff divider of the same size as the holder. The dividers shall clearly state the section number and title. All written instructions within the manual not provided by the manufacturers shall be typewritten with a margin on the left hand side.

b) The arrangement and contents of O & M manuals shall be as follows :

1) Chapter 1 - Plant Description : To contain the following sections specific to the equipment/system supplied

(a) Description of operating principle of equipment / system with schematic drawing / layouts.

(b) Functional description of associated accessories / controls. Control interlock protection write up.

(c) Integrated operation of the equipment alongwith the intended system. (The is to be given by the supplier of the Main equipment by taking into account the operating instruction given by the associated suppliers).

(d) Exploded view of the main equipment, associated accessories and auxiliaries with description. Schematic drawing of the equipment alongwith its accessories and auxiliaries.

(e) Design data against which the plant performance will be compared.

(f) Master list of equipments, Technical specification of the equipment/ system and approved data sheets.

(g) Identification system adopted for the various components, (it will be of a simple process linked tagging system).

(h) Master list of drawings (as built drawing - Drawings to be enclosed in a separate volume).

2) Chapter 2.0 - Plant Operation: To contain the following sections specific to the equipment supplied

(a) Protection logics provided for the equipment alongwith brief philosophy behind the logic, Drawings etc.

(b) Limiting values of all protection settings.

(c) Various settings of annunciation/interlocks provided.

(d) Startup and shut down procedure for equipment alongwith the associated systems in step mode.

(e) Do's and Don'ts related to operation of the equipment.

(f) Safety precautions to be take during normal operation. Emergency instruction on total power failure condition/lubrication failure/any other conditions.

(g) Parameters to be monitored with normal value and limiting values.

(h) Equipment isolating procedures.

(i) Trouble shooting with causes and remedial measures.

(j) Routine testing procedure to ascertain healthiness of the safety devices alongwith schedule of testing.

(k) Routine Operational Checks, Recommended Logs and Records

(l) Change over schedule if more than one auxiliary for the same purpose is given.

(m) Preservation procedure on long shut down.

(n) System/plant commissioning procedure.

3) Chapter 3.0 - Plant Maintenance- To contain the following sections specific to the equipment supplied.

(a) Exploded view of each of the equipments. Drawings alongwith bill of materials including name, code no. & population.

(b) Exploded view of the spare parts and critical components with dimensional drawings (In case of Electronic cards, the circuit diagram to be given) and spare parts catalogue for each equipment.

(c) List of Special T/ P required for Overhauling /Trouble shooting including special testing equipment required for calibration etc.

(d) Stepwise dismantling and assembly procedure clearly specifying the tools to be used, checks to be made, records to be maintained etc. Clearance to be maintained etc.

(e) Preventive Maintenance schedules linked with running hours/calendar period alongwith checks to be carried out.

(f) Overhauling schedules linked with running hours/calendar period alongwith checks to be done.

(g) Long term maintenance schedules

(h) Consumables list alongwith the estimated quantity required during normal running and during maintenance like Preventive Maintenance and Overhauling.

(i) List of lubricants with their Indian equivalent, Lubrication Schedule including charts showing lubrication checking, testing and replacement procedure to be carried daily, weekly, monthly & at longer intervals to ensure trouble free operation and quantity required for complete replacement..

(j) Tolerance for fitment of various components.

(k) Details of sub vendors with their part no. in case of bought out items.

(l) List of spare parts with their Part No, total population, life expediency & their interchangeability with already supplied spares to NTPC.

(m) List of mandatory and recommended spare list along with manufacturing drawings, material specification & quality plan for fast moving consumable spares.

(n) Lead time required for ordering of spares from the equipment supplier, instructions for storage and preservation of spares.

(o) General information on the equipment such as modification carried out in the equipment from its inception, equipment population in the country / foreign country and list of utilities where similar equipments have been supplied.

8.03.03 After finalization and approval of the Employer, the O & M Manuals shall be submitted as indicated in Annexure-VI. The Contract shall not be considered to be completed for purposes of taking over until the final Instructions manuals (both erection and O & M manuals have been supplied to the Employer.

If after the commissioning and initial operation of the plant, the instruction manuals (Erection and /or O &M manuals) require modifications/additions/ changes, the same shall be incorporated and the updated final instruction manuals shall be submitted by the Contractor to the Employer for records and number of copies shall be as mentioned in Annexure-VI.

8.03.03 **PLANT HANDBOOK AND PROJECT COMPLETION REPORT**

(a.) PLANT HANDBOOK

The Contractor shall submit to the Employer a preliminary plant hand book preferably in A-4 size sheets which shall contain the design and performance data of various plants, equipments and systems covering the complete project including

1. Design and performance data.

2. Process & Instrumentation diagrams.

3. Single line diagrams.

4. Sequence & Protection Interlock Schemes.

5. Alarm and trip values.

6. Performance Curves.

7. General layout plan and layout of main plant building and auxiliary buildings

8. Important Do's & Don't's

The plant handbook shall be submitted within twelve (12) months from the date of award of contract. After the incorporation of Employer's comments, the final plant handbook complete in all respects shall be submitted three (3) months before start-up and commissioning activities.

(b.) **Project Completion Report**

The Contractor shall submit a Project Completion Report at the time of handing over the plant.

8.03.04 **DRAWINGS**

(a.) All documents submitted by the Contractor for Employer's review shall be in electronic form (soft copies) along with the desired number of hard copies as per Annexure-I of Part-C. The soft copies shall be uploaded by the vendors in c-folder, a web based system of NTPC ERP, for which a username and password will be alloted to the new vendor by NTPC.

Similarly, the vendor can download the drawings / documents, approved / commented by NTPC , through above site.
The soft copies of identified drawings / documents shall be in pdf format, whereas the attachements / reply to the submitted document(s) can be in .doc, .xls, .pdf, .dwg or .std formats.

(b.) Final copies of the approved drawings alongwith requisite number of hard copies shall be submitted as per Annexure-I of Part-C.

(c.) Contractor shall prepare the model of all the facilities located in TG building (including all facilities), and any other facility located in TG building area in an integrated & intelligent 3D software solution using rule-based, data centric 3D Design software with equipment drawings, data sheets, intelligent P&ID correlated with intelligent 3D Model, BOQ, schematics and logic diagrams

etc. attached to the respective equipment / systems in the aforesaid 3D model.

All piping layouts, equipment layouts, floor plans, ducting layout (A/C, Ventilation etc.), General Arrangement drawings of major buildings, structural arrangement drawings and RCC layout drawings shall necessarily be extracted from the aforesaid 3D model and submitted for employer's review along with the 3D review model to enable NTPC to review and approve these drawings.

Contractor shall prepare and provide 3D design review model (network ready, which shall include visual interference check, walk-through animation, video simulation for major equipment placement and removal, visual effect, photo realism etc.), which is extracted from intelligent 3D model and shall make a presentation of the same every 3 months from LOA to enable NTPC to review the progress of engineering or as and when required by employer.. After the completion of engineering of facilities covered under this package, the corresponding complete 3D review model shall be handed over to the employer for its reference.

(d.) All documents/text information shall be in latest version of MS Office/ MS Excel/ PDF Format as applicable.

(e.) All drawings submitted by the Contractor including those submitted at the time of bid shall be in sufficient detail indicating the type, size, arrangement, weight of each component for packing and shipment, the external connection, fixing arrangement required, the dimensions required for installation and interconnections with other equipments and materials, clearance and spaces required between various portions of equipment and any other information specifically requested in the drawing schedules.

(f.) Each drawing submitted by the Contractor (including those of subvendors) shall bear a title block at the right hand bottom corner with clear mention of the name of the Employer, the system designation, the specifications title, the specification number, the name of the Project, drawing number and revisions. If standard catalogue pages are submitted the applicable items shall be indicated therein. All titles, notings, markings and writings on the drawing shall be in English. All the dimensions should be in metric units.

(g.) The drawings submitted by the Contractor (or their subvendors) shall bear Employer's drawing number in addition to contractor's (their sub-vendor's) own drawing number. Employer's drawing numbering system shall be made available to the successful bidder so as to enable him to assign Employer's drawing numbers to the drawings to be submitted by him during the course of execution of the Contract.

Similarly, all the drawings/ documents submitted by the Contractor during detailed engineering stage shall be marked "FOR APPROVAL" or "FOR INFORMATION" prior to submission.

Further, space shall be identified on each drawing for approval stamp and electronic signature.

(j.) The furnishing of detailed engineering data and drawings by the Contractor shall be in accordance with the time schedule for the project. The review of these documents/ data/ drawings by the Employer will cover only general conformance of the data/ drawings/ documents to the specifications and contract, interfaces with the equipments provided by others and external connections & dimensions which might affect plant layout. The review by the Employer should not be construed to be a thorough review of all dimensions, quantities and details of the equipments, materials, any devices or items indicated or the accuracy of the information submitted. The review and/ or approval by the Employer / Project Manager shall not relieve the Contractor of any of his responsibilities and liabilities under this contract.

(k.) After the approval of the drawings, further work by the Contractor shall be in strict accordance with these approved drawings and no deviation shall be permitted without the written approval of the Employer.

(l.) All manufacturing, fabrication and execution of work in connection with the equipment / system, prior to the approval of the drawings, shall be at the Contractor's risk. The Contractor is expected not to make any changes in the design of the equipment /system, once they are approved by the Employer. However, if some changes are necessitated in the design of the equipment/system at a later date, the Contractor may do so, but such changes shall promptly be brought to the notice of the Employer indicating the reasons for the change and get the revised drawing approved again in strict conformance to the provisions of the Technical Specification.

(m.) Drawings shall include all installations and detailed piping layout drawings. Layout drawings for all piping of 65 mm and larger diameter shall be submitted for review/ approval of Employer prior to erection. Small diameter pipes shall however be routed as per site conditions in consultation with site authority / representative of Employer based on requirements of such piping indicated in approved / finalized Flow Scheme / Process & Instrumentation Diagrams and/or the requirements cropping up for draining & venting of larger diameter piping or otherwise after their erection as per actual physical condition for the entire scope of work of this package.

(n.) Assessing & anticipating the requirement and supply of all piping and equipment shall be done by the contractor well in advance so as not to hinder the progress of piping & equipment erection, subsequent system charging and its effective draining & venting arrangement as per site suitability.

(o.) As Built Drawings

After final acceptance of individual equipment / system by the Employer, the Contractor will update all original drawings and documents for the equipment / system to "as built" conditions and submit number of coppies as per **Annexure-I**.

(p.) Drawings must be checked by the Contractor in terms of its completeness, data adequacy and relevance with respect to Engineering schedule prior to submission to the Employer. In case drawings are found to be submitted without proper checking by the Contractor, the same shall not be reviewed and returned to the Contractor for re-submission. The contractor shall make a visit to site to see the existing facilities and understand the layout completely and collect all necessary data / drawings at site which are needed as an input to the engineering. The contractor shall do the complete engineering including interfacing and integration of all his equipment, systems & facilities within his scope of work as well as interface engineering & integration of systems, facilities, equipment & works under Employer's scope and submit all necessary drawings/ documents for the same.

(q.) The Contractor shall submit adequate prints of drawing / data / document for Employer's review and approval. The Employer shall review the drawings and return soft copy to the Contractor authorizing either to proceed with manufacture or fabrication, or marked to show changes desired. When changes are required, drawings shall be re-submitted promptly, with revisions clearly marked, for final review. Any delays arising out of the failure of the Contractor to submit/rectify and resubmit in time shall not be accepted as a reason for delay in the contract schedule.

(r.) All engineering data submitted by the Contractor after final process including review and approval by the Project Manager/ Employer shall form part of the contract documents and the entire works covered under these specification shall be performed in strict conformity with technical specifications unless otherwise expressly requested by the Project Manager in writing.

8.03.05 **e-Learning Package:**

e-learning packages shall be supplied for the equipment / system for the following Steam Turbine Generator & auxiliaries along with associated electrical and C&I system.

8.03.05.01 **Steam Turbine Generator & Auxiliaries**

Steam Turbine including stop valves, control valves, overload valves and cross over piping. Steam Turbine Auxiliary Systems including Quick Closing and Ordinary NRVs, Turbine gland sealing system, Lubricating oil system and its purification system, Centralised oil storage and its purification system, Control fluid and its purification system, governing and protection system, exhaust hood spray cooling system, drainage and vent system, turbine preservation system, HP/LP Bypass system.

Generator and Auxiliary System including Generator, complete hydrogen cooling, carbon dioxide and nitrogen gas systems as applicable, complete seal oil system, complete water cooling system where applicable and complete excitation system.

Condensing Plant including Condenser, Condenser air evacuation system and Condenser on load tube cleaning system as applicable.

Drip Pump along with all accessories as applicable, Condensate Extraction Pumps along with all accessories, Deaerator level Control Station, Feed Water Heating Plant including Drain Cooler, low pressure heaters, deaerator and feed storage tank, high pressure heaters and associated accessories, Boiler Feed Pumps along with all accessories, Drive Turbine for Boiler Feed Pump along with all accessories, Feed regulating station, Make up system to Condenser, Gland Steam Condenser Recirculation System, Turbine Hall EOT Cranes and EOT Crane for Boiler Feed Pump as applicable.

8.03.05.02 These packages shall be installed on the Learning Management Server (LMS) of Power Management Institute (PMI) , NTPC located at Noida . The Engineer- In-Charge (EIC) for the e-learning modules shall be from PMI.

1. The objective of the e-Learning package consisting of courses for erection, commissioning, operation and maintenance of equipment / system as specified above is to facilitate the employees to have first hand information /requirement with respect to above activities for the supplied equipment /system.

2. The bidder shall submit e-learning courses each for erection, commissioning, operation and maintenance of each of the equipment / system supplied as above.
   a. The erection course(s) should include instructions on pre-checks, prerequisites, erection strategy, erection procedure etc.
   b. The commissioning course(s) should include instructions on recommissioning,commissioning, initial operation etc.
   c. The operation course(s) should include instructions on the permissive, interlocks, physical check ups, start up , shutdown and protections etc.
   d. The maintenance course(s) should include instructions on predictive, preventive, breakdown and overhauling.

   Depth of coverage of above courses shall be as specified for “Instruction Manuals” in above clauses. A literature on caution / safety while handling equipment / system for the above modules shall follow the description of the said equipment /system.

3. The e-Learning packages on equipment / system shall be installed by the vendor and shall be successfully test run in the presence of EIC or representative before acceptance by NTPC. The vendor will also give the master copy in form of Flash Drive/CD/DVD. The respective module for erection & commissioning shall be delivered and successfully test run at least three months before the scheduled start of the corresponding activity at site.

   The respective module for operation & maintenance shall be delivered and successfully test run at least three months before scheduled first synchronization of first unit.

4. **e-Learning course broad requirements:**

   a. The courses shall be web based and mobile based Application type.

      It shall run on all possible versions of web browser like Internet Explorer, Google Chrome, Firefox etc. on Laptop/Desktop and shall be Smartphone/Tablet/Mobile responsive. The Mobile responsive courses shall run on Android, Windows Mobile, Blackberry, iOS etc.

   b. The courses shall support liquid/fluid page layout so that the entire screen gets adjusted to PC, Laptop, Smartphone/Mobile, Tablet and any other display devices.

   c. Course content text shall be in English language and be associated with a voiceover in English language with Indian accent.

   d. Courses shall be SCORM (Sharable Content Object Reference Model) compliant, version 1.2 which is compatible with LMS at PMI.

   e. Each course shall have every physical and functional detail of the equipment / system supplied.

   f. Each of the e-Learning course shall be based on multiple web pages and mobile pages with multiple modules.

   g. There shall be option for self-assessment test after every course. In case the user doesn't opt for self assessment test the user shall be able to go to the next course. There shall be no restriction in no. of times for repeating the assessments. All correct answers along with the answers marked by the users shall be displayed at the end of test/quiz.

   h. If Java and Flash, as applicable are not available in the system to run the package, then there shall be a prompt message for updation of the same.

   i. Each course shall have a self-running interactive content with navigation buttons containing forward, backward, pause, bookmark and menu options in the course window.

j. The course shall contain chapter titled 'Introduction/overview' that explains the purpose of the course.

k. The course content shall contain descriptive text shall be factual, specific, terse, clearly worded, and simply illustrative, so that the user can understand it.

l. The system shall provide the user with the ability to select the information with a Cursor.

m. The course menu should contain table of content linked to concerned pages. The user shall be given the capability to access all of the functions available on the system through a menu system. This shall consist of active buttons, which shall control a hierarchy of pull down/pop up menus. Menu shall appear quickly and exist only while a selection is being made. The user shall be given the capability to position the cursor or pointer on the menu item and use pointer device such as mouse to activate the function.

n. Every course shall contain the 3D design/drawing/exploded view/360$_0$ turn around view of the equipment/system, textual description of the equipment/system and its functionality with video (as applicable), animation and audio.

o. The users shall be able to control audio sound level associated with the courses.

p. Drawings / text in the courses shall be scalable (Zoom In/ Out).'

q. The user shall have the capability to record a **bookmark** to mark displayed information for later recall, whenever he accesses the same course next time.

Notes:

1. e-learning Package of an equipment / system shall include e-learning courses for each of erection, commissioning, operation and maintenance of that equipment / system.

2. e-learning courses on erection, commissioning, operation and maintenance of an equipment / system shall include e-learning lessons/chapters/modules (as required) for erection, commissioning, operation and maintenance respectively of that equipment / system.

3. The vendor shall get the approval of one sample course from EIC before proceeding for further courses.

8.04.00 Engineering Co-ordination Procedure

8.04.01 The following principal coordinators will be identified by respective organizations at time of award of contract:

NTPC Engineering Coordinator (NTPC EC) :

Name :

Designation :

Address :

a) Postal :

b) Telegraphic / e-Mail :

c) FAX : TELEPHONE :

Contractor's/ Vendor's Engineering Coordinator (VENDOR EC):

Name :

Designation :

Address :

a) Postal :

b) Telegraphic / e-Mail :

c) FAX : TELEPHONE :

8.04.02 All engineering correspondence shall be in the name of above coordinators on behalf of the respective organizations.

8.04.03 Contractor's/Vendor's Drawing Submission and Approval Procedure:

a) All data/information furnished by Vendor in the form of drawings/ documents/catalogues or in any other form for NTPC's information/ interface and or review and approval are referred by the general term "drawings".

b) Not used

c) All drawings (including those of subvendor's) shall bear at the right hand bottom corner the 'title plate' with all relevant information duly filled in. The Contractor shall furnish this format to his subvendor along with his purchase order for subvendor's compliance.

d) Not used

e) The contractor shall make a visit to site to see the existing facilities and understand the layout completely and collect all necessary data / drawings at site which are needed as an input to the engineering. The contractor shall do the complete engineering including interfacing and integration of all his equipment, systems & facilities within his scope of work as well as interface engineering & integration of systems, facilities, equipment & works under Employer's scope and submit all necessary drawings/ documents for the same.

f) **Drawings must be checked by the Contractor in terms of its completeness, data adequacy and relevance with respect to engineering schedule prior to submission to the Employer. In case drawings are found to be submitted without proper endorsement for checking by the Contractor, the same shall not be reviewed and returned to the Contractor for re-submission.**

g) The Contractor shall submit adequate prints of drawing / data / document for Employer's review and approval. The drawings submitted by the Contractor/vendor shall be reviewed by NTPC and their comments shall be forwarded within three (3) weeks of receipt of drawings. Upon review of each drawing, depending on the correctness and completeness of the drawing, the same will be categorized and approval accorded in one of the following categories :

CATEGORY- I:	Approved
CATEGORY- II	Approved, subject to incorporation of comments/ modification as noted. Resubmit revised drawing incorporating the comments.
CATEGORY –III	Not approved. Resubmit revised drawings for approval after incorporating comments/ modification as noted.
CATEGORY -IV	For information and records.

h) Contractor shall resubmit the drawings approved under Category II, III & IVR within three (3) weeks of receipt of comments on the drawings, incorporating all comments. Every revision of the drawing shall bear a revision index wherein such revisions shall be highlighted in the form of description or marked up in the drawing identifying the same with relevant revision Number enclosed in a triangle (eg. 1, 2, 3 etc). Contractor shall not make any changes in the portions of the drawing other than those commented. If changes are required to be made in the portions already approved, the Contractor shall resubmit the drawing identifying the changes for Employer's review and approval. **Drawings resubmitted shall show clearly the portions where the same are revised marking the relevant revision numbers and Employer shall review only such revised portion of documents.**

i) In case, the Contractor/ Vendor does not agree with any specific comment, he shall furnish the explanation for the same to NTPC for consideration. In all such cases the Contractor shall necessarily enclose explanations along with the revised drawing (taking care of balance comments) to avoid any delay and/or duplication in review work.

j) It is responsibility of the Contractor/ Vendor to get all the drawings approved in the Category I & IV (as the case may be) and complete engineering activities within the agreed schedule. Any delay arising out of submission and modification of drawings shall not alter the contract completion schedule.

k) If Contractor/ Vendor fails to resubmit the drawings as per the schedule, construction work at site will not be held up and work will be carried out on the basis of comments furnished on previous issues of the drawing.

l) These comments will be taken care by the contractor while submitting the revised drawing.

The contractor shall use a single transmittal for drawings. Submission. This shall include transmittal numbers and date, number of copies being sent, names of the agencies to whom copies being sent, drawing number and titles, remarks or special notes if any etc.

8.05.00 **ENGINEERING PROGRESS AND EXCEPTION REPORT**

8.05.01 The Contractor shall submit every month an Engineering progress and Exception Report giving the status of each engineering information including

(a.) A list of drawings/engineering information which remains unapproved for more than four (4) weeks after the date of first submission.

(b.) Drawings which were not submitted as per agreed schedule.

8.05.02 The draft format for this report shall be furnished to the Employer within four (4) weeks of the award of the contract, which shall then be discussed and finalised with the Employer.

8.06.00 **TECHNICAL CO-ORDINATION MEETING**

8.06.01 The Contractor shall be called upon to organise and attend monthly Design/ Technical Co-ordination Meetings (TCMs) with the Employer/Employer's representatives and other Contractors of the Employer during the period of contract. The Contractor shall attend such meetings at his own cost at NEW DELHI / NOIDA or at mutually agreed venue as and when required and fully co-operate with such persons and agencies involved during the discussions.

8.06.02 The Contractor should note that Time is the essence of the contract. In order to expedite the early completion of engineering activities, the Contractor shall submit all drawings as per the agreed Engineering Information Submission Schedule.The drawings submitted by the Contractor will be reviewed by the Employer as far as practicable within three (3) weeks from the date of receipt of the drawing .The comments of the Employer shall then be discussed across the table during the above Technical Co-ordination Meeting (s) wherein best efforts shall be made by both sides to ensure the approval of the drawing.

8.06.03 The Contractor shall ensure availability of the concerned experts / consultants/ personnel who are empowered to take necessary decisions during these meetings. The Contractor shall be equipped with necessary tools and facilities so that the drawings/documents can be resubmitted after incorporating necessary changes and approved during the meeting itself.

8.06.04 Should any drawing remain unapproved for more than six (6) weeks after it's first submission, this shall be brought out in the monthly Engineering Progress and Exception Report with reasons thereof.

8.06.05 Any delays arising out of failure by the Contractor to incorporate Employer's comments and resubmit the same during the TCM shall be considered as a default and in no case shall entitle the Contractor to alter the Contract completion date.

8.07.00 **DESIGN IMPROVEMENTS**

The Employer or the Contractor may propose changes in the specification of the equipment or quality thereof and if the parties agree upon any such changes the specification shall be modified accordingly.

If any such agreed upon change is such that it affects the price and schedule of completion, the parties shall agree in writing as to the extent of any changing the price and/or schedule of completion before the Contractor proceeds with the change. Following such agreement, the provision thereof, shall be deemed to have been amended accordingly.

8.07.01 **Testing of major design features:**

The major design features of the system shall be conducted by the Contractor at the Contractor's works or any other place mutually agreed within six months from the date of LOA. These are the system function tests, which have a major impact on the detailed system design & finalization of important engineering documents like configuration, functional grouping, BOM etc., but do not require a fully engineered system for conductance. Bidder shall identify these features & include detailed test procedures in the bid, which shall be finalized during discussions with the bidder before award. The developments and any augmentation of standard features undertaken by the Bidder to fulfill the various specification requirements, shall be also be tested during these major design tests. This shall include but not be limited to the following.

a) System accuracy tests of DDCMIS for the various type of inputs identified in Part-B.

b) Loop reaction time for sample loops/ logics.

c) N/A.

d) Server changeover.

e) Various response times, having serious implication on operation & maintenance philosophy.

f) Duty cycle of controller/ HMIPIS with simulated load, representative of the final engineered load.

g) Unified HMI for DDCMIS as indicated in IIC-01, Scope of supply & services chapter of Part-A, Section-VI.

The results of the above tests, after its acceptance by the Employer, shall be properly documented and submitted to Employer. If any of the envisaged tests have

been carried out by Bidder in a previous NTPC project, then the same need not be specifically conducted by the Bidder for this project, provided it is clearly established by the Bidder & accepted by the Employer that there is no difference between the system offered for this project & the previous NTPC project w.r.t. the test. However, even in such a case, test report of the previous project shall be submitted by the Bidder as a part of MDFT (Major Design Feature Test) report.

8.07.02 **Demonstration of Application Engineering**

A) The Contractor shall prepare and submit typical implemented scheme in their system (Control system & HMI) on sample basis. The typical cases to be covered shall include but not be limited to the following.

(i) Logics/Loops:

a) Drive logics implementation for each type of binary drive along with its display in HMI.

b) Sequence implementation along with its display in HMI.

c) Single non-cascade controller implementation.

d) Cascade loop implementation.

e) Master slave implementation with different slave combination.

f) Temperature & pressure compensation for flow signals & pressure compensation for level signals as applicable.

(ii) HMI Functions:

a) LVS Annunciation.

b) Graphics.

c) HSR

d) Logs/Reports.

e) N/A.

B) The above typical cases shall be finalized with the Employer through Technical Co-ordination meetings.

After review and finalization of the typical cases, the implementation of each logic & control loop shall be carried out by the Contractor. After implementation of these

logics & loops, the Contractor shall test each logic/loop and record the observations in a format to be provided by the Employer and demonstrate to Employer at Employer premises during engineering finalization. Any modifications as a result of the demonstration shall be done and documented as part of the test report along with the final scheme. Similarly, HMI functions shall also be demonstrated by the Contractor at Employer premises & the results shall be documented as part of test report.

C) During the integrated testing at the Contractor's works, only sample checks shall be done by the Employer for the items covered in above application engineering demonstration.

8.08.00 **EQUIPMENT BASES**

A cast iron or welded steel base plate shall be provided for all rotating equipment which is to be installed on a concrete base, unless otherwise specifically agreed to by the Employer. Each base plate which support the unit and its drive assembly, shall be of a neat design with pads for anchoring the units, shall have a raised lip all around, and shall have threaded drain connections.

8.09.00 **PROTECTIVE GUARDS**

Suitable guards shall be provided for protection of personnel on all exposed rotating and/or moving machine parts. All such guards shall be designed for easy installation and removal for maintenance purpose.

8.10.00 **LUBRICANTS, SERVO FLUIDS AND CHEMICALS**

8.10.01 All the first fill and one year's topping requirements of consumables such asgreases, oil, lubricants, servo fluids / control fluids, gases (excluding H2, CO2 and N2 for Generator) and essential chemicals etc. which will be required to put the equipment covered under the scope of specifications, into successful commissioning / initial operation and to establish completion of facilities shall be supplied by the Contractor. Suitable standard lubricants as available in India are desired. Efforts should be made to limit the variety of lubricants to minimum.

Bidder scope shall also include supply of H2 , CO 2 and N2 as applicable for the Generator till successful commisioning of the Generator.

Bidder shall also supply a quantity not less than 10% of the full charge of each variety of lubricants, servo fluids, gases, chemicals etc (as detailed above) which is expected to be utilised during the first year of operation. This additional quantity shall be supplied in separate Containers.

8.10.02 As far as possible lubricants marketed by the Indian Oil Corporation shall be used. The variety of lubricants shall be kept to a minimum possible.

Detailed specifications for the lubricating oil, grease, gases, servo fluids, control fluids, chemicals etc. required for the complete plant covered herein shall be furnished. On completion of erection, a complete list of bearings/ equipment giving their location and identification marks shall be furnished to the Employer alongwith lubrication requirements.

8.11.00 **Lubrication**

8.11.01 Equipment shall be lubricated by systems designed for continuous operation. Lubricant level indicators shall be furnished and marked to indicate proper levels under both standstill and operating conditions.

8.12.00 **Material of Construction**

8.12.01 All materials used for the construction of the equipment shall be new and shall be in accordance with the requirements of this specification. Materials utilised for various components shall be those which have established themselves for use in such applications.

8.13.00 **RATING PLATES, NAME PLATES & LABELS**

8.13.01 Each main and auxiliary item of plant including instruments shall have permanently attached to it in a conspicuous position, a rating plate of non-corrosive material upon which shall be engraved manufacturer's name, equipment, type or serial number together with details of the ratings, service conditions under which the item of plant in question has been designed to operate, and such diagram plates as may be required by the Employer.

8.13.02 Each item of plant shall be provided with nameplate or label designating the service of the particular equipment. The inscriptions shall be approved by the Employer or as detailed in appropriate section of the technical specifications.

8.13.03 Such nameplates or labels shall be of white nonhygroscopic material with engraved black lettering or alternately, in the case of indoor circuit breakers, starters, etc. of transparent plastic material with suitably coloured lettering engraved on the back. The name plates shall be suitably fixed on both front and rear sides.

8.13.04 Items of plant such as valves, which are subject to handling, shall be provided with an engraved chromium plated nameplate or label with engraving filled with enamel.

The name plates for valves shall be marked in accordance with MSS standard SP-25 and ANSI B 16.34 as a minimum.

8.13.05 Hanger/ support numbers shall be marked on all pipe supports, anchors, hangers, snubbers and restraint assemblies. Each constant and variable spring support shall also have stamped upon it the designed hot and cold load which it is intended to support. Suitable scale shall also be provided to indicate load on support/hanger.

8.13.06 Valves, steam traps and strainers shall be identified by Employer's tag number of a metal tap permanently attached to non pressure parts such as the yoke by a stainless steel wire. The direction of flow shall also be marked on the body.

8.13.07 Safety and relief valves shall be provided with the following :

(a.) Manufacturer's identification.

(b.) Nominal inlet and outlet sizes in mm.

(c.) Set pressure in Kg/cm² (abs).

(d.) Blowdown and accumulation as percentage of set pressure.

(e.) Certified capacity in Kg of saturated steam per hour or in case of liquid certified capacity in litres of water per minute.

8.13.08 All such plates, instruction plates, etc. shall be bilingual with Hindi inscription first, followed by English. Alternatively, two separate plates one with Hindi and the other with English inscriptions may be provided.

8.13.09 All segregated phases of conductors or bus ducts, indoor or outdoor, shall be provided with coloured phase plates to clearly identify the phase of the system

8.14.00 **TOOLS AND TACKLES**

The Contractor shall supply with the equipment one complete set of all special tools and tackles and other instruments required for the erection, assembly, disassembly and proper maintenance of the plant and equipment and systems (including software). These special tools will also include special material handling equipment, jigs and fixtures for maintenance and calibration / readjustment, checking and measurement aids etc. A list of such tools and tackles shall be submitted by the Bidder alongwith the offer.

The price of each tool / tackle shall be deemed to have been included in the total bid price. These tools and tackles shall be separately packed and sent to site. The Contractor shall also ensure that these tools and tackles are not used by him during erection, commissioning and initial operation. For this period the Contractor should bring his own tools and tackles. All the tools and tackles shall be of reputed make acceptable to the Employer.

8.15.00 **WELDING**

8.15.01 If the manufacturer has special requirements relating to the welding procedures for welds at the terminals of the equipments to be performed by others the requirements shall be submitted to the Employer in advance of commencement of erection work.

8.16.00 **COLOUR CODE FOR ALL EQUIPMENTS/ PIPINGS/ PIPE SERVICES**

8.16.01 All equipment/ piping/ pipe services are to be painted by the Contractor in accordance with Employer's standard colour coding scheme, which will be furnished to the Contractor during detailed engineering stage.

8.17.00 **PROTECTION AND PRESERVATIVE SHOP COATING**

8.18.00 **PROTECTION**

All coated surfaces shall be protected against abrasion, impact, discoloration and any other damages. All exposed threaded portions shall be suitably protected with either metallic or a nonmetallic protection device. All ends of all valves and pipings and conduit equipment connections shall be properly sealed with suitable devices to protect them from damage. The parts which are likely to get rusted, due to exposure to weather, should also be properly treated and protected in a suitable manner. All primers/paints/coatings shall take into account the hot humid, corrosive & alkaline, subsoil or overground environment as the case may be. The requirements for painting specification shall be complied with as detailed out in Part-A & B of the Technical Specification.

8.19.00 **PRESERVATIVE SHOP COATING**

All exposed metallic surfaces subject to corrosion shall be protected by shop application of suitable coatings. All surfaces which will not be easily accessible after the shop assembly, shall be treated beforehand and protected for the life of the equipment. All surfaces shall be thoroughly cleaned of all mill scales, oxides and other coatings and prepared in the shop. The surfaces that are to be finish-painted

after installation or require corrosion protection until installation, shall be shop painted as per the requirement covered in the relevant part of the Technical Specification.

Transformers and other electrical equipments if included shall be shop finished with one or more coats of primer and two coats of high grade resistance enamel. The finished colors shall be as per manufacturer's standards, to be selected and specified by the Employer at a later date.

8.19.01 Shop primer for all steel surfaces which will be exposed to operating temperature below 95 degrees Celsius shall be selected by the Contractor after obtaining specific approval of the Employer regarding the quality of primer proposed to be applied. Special high temperature primer shall be used on surfaces exposed to temperature higher than 95 degrees Celsius and such primer shall also be subject to the approval of the Employer.

8.19.02 All other steel surfaces which are not to be painted shall be coated with suitable rust preventive compound subject to the approval of the Employer.

8.19.03 All piping shall be cleaned after shop assembly by shot blasting or other means approved by the Employer. Lube oil piping or carbon steel shall be pickled.

8.19.04 Painting for Civil structures shall be done as specified under technical requirements on civil works in relevant part of this specifications.

9.00.00 **QUALITY ASSURANCE PROGRAMME**

9.01.00 The Contractor shall adopt suitable quality assurance programme to ensure that the equipment and services under the scope of contract whether manufactured or performed within the Contractor's works or at his sub-contractor's premises or at the Employer's site or at any other place of work are in accordance with the specifications. Such programmes shall be outlined by the Contractor and shall be finally accepted by the Employer/authorised representative after discussions before the award of the contract. The QA programme shall be generally in line with ISO-9001.A quality assurance programme of the contractor shall generally cover the following:

(a.) His organisation structure for the management and implementation of the proposed quality assurance programme

(b.) Quality System Manual

(c.) Design Control System

(d.) Documentation and Data Control System

(e.) Qualification data for bidder's key personnel.

(f.) The procedure for purchase of materials, parts, components and selection of sub-contractor's services including vendor analysis, source inspection, incoming raw-material inspection, verification of materials purchased etc.

(g.) System for shop manufacturing and site erection controls including process, fabrication and assembly.

(h.) Control of non-conforming items and system for corrective actions and resolution of deviations.

(i.) Inspection and test procedure both for manufacture and field activities.

(j.) Control of calibration and testing of measuring testing equipment.

(k.) System for Quality Audits.

(l.) System for identification and appraisal of inspection status.

(m.) System for authorising release of manufactured product to the Employer.

(n.) System for handling, storage and delivery.

(o.) System for maintenance of records, and

(p.) Quality plans for manufacturing and field activities detailing out the specific quality control procedure adopted for controlling the quality characteristics relevant to each item of equipment/component.

9.02.00 **GENERAL REQUIREMENTS - QUALITY ASSURANCE**

9.02.01 All materials, components and equipment covered under this specification shall be procured, manufactured, erected, commissioned and tested at all the stages, as per a comprehensive Quality Assurance Programme. An indicative programme of inspection/tests to be carried out by the contractor for some of the major items is given in the respective technical specification which shall be finalised giving due consideration to the manufacturer's standard and proven practices being followed. This is, however, not intended to form a comprehensive programme as it is the contractor's responsibility to draw up and implement such programme duly approved by the Employer. The detailed Quality Plans for manufacturing and field activities

shall be drawn up by the Bidder and will be submitted to Employer for approval. Schedule of finalisation of such quality plans will be finalised before award. Monthly progress reports on MQP/FQP submission/approval shall be furnished on enclosed format No. QS-01-QAI-P-02/F1.

9.02.02 Manufacturing Quality Plan will detail out for all the components and equipment, various tests/inspection, to be carried out as per the requirements of this specification and standards mentioned therein and quality practices and procedures followed by Contractor's/ Sub-contractor's/ sub-supplier's Quality Control Organisation, the relevant reference documents and standards, acceptance norms, inspection documents raised etc., during all stages of materials procurement, manufacture, assembly and final testing/performance testing. The Quality Plan shall be submitted on electronic media through c-folders, a web based system of NTPC ERP in addition to hard copy, for review and approval. After approval the same shall be submitted in compiled form on CD-ROM.

9.02.03 Field Quality Plans will detail out for all the equipment, the quality practices and procedures etc. to be followed by the Contractor's "Site Quality Control Organisation", during various stages of site activities starting from receipt of materials/equipment at site.

9.02.04 The Bidder shall also furnish copies of the reference documents/plant standards/acceptance norms/tests and inspection procedure etc., as referred in Quality Plans along with Quality Plans. These Quality Plans and reference documents/standards etc. will be subject to Employer's approval without which manufacturer shall not proceed. These approved documents shall form a part of the contract. In these approved Quality Plans, Employer shall identify customer hold points (CHP), i.e. test/checks which shall be carried out in presence of the Employer's Project Manager or his authorised representative and beyond which the work will not proceed without consent of Employer in writing. All deviations to this specification, approved quality plans and applicable standards must be documented and referred to Employer along with technical justification for approval and dispositioning.

9.02.05 No material shall be despatched from the manufacturer's works before the same is accepted, subsequent to predespatch final inspection including verification of records of all previous tests/inspections by Employer's Project Manager/Authorised representative and duly authorised for despatch by issuance of Material Despatch Clearance Certificate (MDCC).

9.02.06 All material used for equipment manufacture including casting and forging etc. shall be of tested quality as per relevant codes/standards. Details of results of the tests conducted to determine the mechanical properties; chemical analysis and details of

heat treatment procedure recommended and actually followed shall be recorded on certificates and time temperature chart. Tests shall be carried out as per applicable material standards and/or agreed details.

9.02.07 The contractor shall submit to the Employer Field Welding Schedule for field welding activities in the enclosed format No.: QS-01-QAI-P-02/F2. The field welding schedule shall be submitted to the Employer along with all supporting documents, like welding procedures, heat treatment procedures, NDT procedures etc. at least ninety days before schedule start of erection work at site.

9.02.08 All welding and brazing shall be carried out as per procedure drawn and qualified in accordance with requirements of ASME Section IX/BS-4870 or other International equivalent standard acceptable to the Employer.
All welding/brazing procedures shall be submitted to the Employer or its authorised representative for approval prior to carrying out the welding/brazing.

9.02.09 All brazers, welders and welding operators employed on any part of the contract either in Contractor's/sub-contractor's works or at site or elsewhere shall be qualified as per ASME Section-IX or BS-4871 or other equivalent International Standards acceptable to the Employer.

9.02.10 Welding procedure qualification & Welder qualification test results shall be furnished to the Employer for approval. However, where required by the Employer, tests shall be conducted in presence of Employer/authorised representative.

9.02.11 For all IBR pressure parts and high pressure piping welding, the latest applicable requirements of the IBR (Indian Boiler Regulations) shall also be essentially complied with. However, for other piping system ASME B31.1 or other relevant code as applicable shall be followed. Similarly, any other statutory requirements for the equipment/systems shall also be complied with. On all back-gauged welds MPI/LPI shall be carried before seal welding.

9.02.12 Unless otherwise proven and specifically agreed with the Employer, welding of dissimilar materials and high alloy materials shall be carried out at shop only.

9.02.13 No welding shall be carried out on cast iron components for repair.

9.02.14 All the heat treatment results shall be recorded on time temperature charts and verified with recommended regimes.

9.02.15 All non-destructive examination shall be performed in accordance with written procedures as per International Standards, The NDT operator shall be qualified as per SNT-TC-IA (of the American Society of non-destructive examination) / EN /

Equivalent. NDT shall be recorded in a report, which includes details of methods and equipment used, result/evaluation, job data and identification of personnel employed and details of co-relation of the test report with the job.

All plates of thickness above 40mm & all bar stock/Forging above 40mm dia shall be ultrasonically tested. For pressure parts, plate of thickness equal to or above 25mm shall be ultrasonically tested.

9.02.16 The Contractor shall list out all major items/ equipment/ components to be manufactured in house as well as procured from sub-contractors (BOI). All the sub-contractor proposed by the Contractor for procurement of major bought out items including castings, forging, semi-finished and finished components/equipment etc., list of which shall be drawn up by the Contractor and finalised with the Employer, shall be subject to Employer's approval. The contractor's proposal shall include vendor's facilities established at the respective works, the process capability, process stabilization, QC systems followed, experience list, etc. along with his own technical evaluation for identified sub-contractors enclosed and shall be submitted to the Employer for approval within the period agreed at the time of pre-awards discussion and identified in "DR" category prior to any procurement. Monthly progress reports on sub-contractor detail submission / approval shall be furnished on enclosed on format no. QS-01-QAI-P-02/F1. Such vendor approval shall not relieve the contractor from any obligation, duty or responsibility under the contract.

9.02.17 For components/equipment procured by the contractors for the purpose of the contract, after obtaining the written approval of the Employer, the contractor's purchase specifications and inquiries shall call for quality plans to be submitted by the suppliers. The quality plans called for from the sub-contractor shall set out, during the various stages of manufacture and installation, the quality practices and procedures followed by the vendor's quality control organisation, the relevant reference documents/standards used, acceptance level, inspection of documentation raised, etc. Such quality plans of the successful vendors shall be finalised with the Employer and such approved Quality Plans shall form a part of the purchase order/contract between the Contractor and sub-contractor. With in three weeks of the release of the purchase orders /contracts for such bought out items /components, a copy of the same without price details but together with the detailed purchase specifications, quality plans and delivery conditions shall be furnished to the Employer on the monthly basis by the Contractor along with a report of the Purchase Order placed so far for the contract.

9.02.18 Employer reserves the right to carry out quality audit and quality surveillance of the systems and procedures of the Contractor's or their sub-contractor's quality management and control activities. The contractor shall provide all necessary assistance to enable the Employer carry out such audit and surveillance.

9.02.19 The contractor shall carry out an inspection and testing programme during manufacture in his work and that of his sub-contractor's and at site to ensure the mechanical accuracy of components, compliance with drawings, conformance to functional and performance requirements, identity and acceptability of all materials parts and equipment. Contractor shall carry out all tests/inspection required to establish that the items/equipment conform to requirements of the specification and the relevant codes/standards specified in the specification, in addition to carrying out tests as per the approved quality plan.

9.02.20 Quality audit/surveillance/approval of the results of the tests and inspection will not, however, prejudice the right of the Employer to reject the equipment if it does not comply with the specification when erected or does not give complete satisfaction in service and the above shall in no way limit the liabilities and responsibilities of the Contractor in ensuring complete conformance of the materials/equipment supplied to relevant specification, standard, data sheets, drawings, etc.

9.02.21 For all spares and replacement items, the quality requirements as agreed for the main equipment supply shall be applicable.

9.02.22 Repair/rectification procedures to be adopted to make the job acceptable shall be subject to the approval of the Employer/ authorised representative.

9.02.23 Environmental Stress Screening

All solid state electronic system / equipment / sub assembly shall be free from infant mortile components. For establishing the compliance to this requirement, the contractor / sub - contractor should meet the following.

1) The Contractor / Sub - contractor shall furnish the established procedure being followed for eliminating infant mortile components. The procedure followed by the Contractor / Sub - contractor should be substantiated along with the statistical figures to validate the procedure being followed. The necessary details as required under this clause shall be furnished at the stage of QP finalization.

OR

In case the Contractor / Sub - contractor do not have any established procedure to eliminate infant mortile components then two or 10% which ever is less, most densely populated Panels shall be tested for Elevated Temperature Cycle Test as per the following procedure.

Elevated Temperature Test Cycle

During the elevated temperature test which shall be for 48 hours, the ambient temperature shall be maintained at 50° C. The equipment shall be interconnected with devices and kept under energized conditions so as to repeatedly perform all operations it is expected to perform in actual service with load on various components being equal to those which will be experienced in actual service.

During the elevated temperature test the cubicle doors shall be closed (or shall be in the position same as they are supposed to be in the field) and inside temperature in the zone of highest heat dissipating components / modules shall be monitored. The temperature rise inside the cubicle should not exceed 10° C above the ambient temperature at 50° C.

In case of any failure during the test cycle, the further course of action should be mutually discussed for demonstrating the intent of the above requirement.

2) Burn in Test Cycle

The test shall be conducted on all the panels fully assembled and wired including the panels having undergone the above mentioned elevated temperature test.

The period of Burn in Test Cycle shall be 120 hrs and process shall be similar to the elevated temperature test as above except that the temperature shall be reduced to the ambient temperature prevalent at that time.

During the above tests, the process I/O and other load on the system shall be simulated by simulated inputs and in the case of control systems; the process which is to be controlled shall also be simulated. Testing of individual components or modules shall not be acceptable.

During the Burn in Test the cubicle doors shall be closed (or shall be in the position same as they are supposed to be in the field) and inside temperature in the zone of highest heat dissipating components / modules shall be monitored. The temperature rise inside the cubicle should not exceed 10° C above the ambient temperature.

The Contractor / Sub-contractor shall carry out routine test on 100% item at contractor / sub-contractor's works. The quantum of check / test for routine & acceptance test by employer shall be generally as per criteria / sampling plan defined in referred standards. Wherever standards have not been mentioned

quantum of check / test for routine / acceptance test shall be as agreed during detailed engineering stage.

9.03.00 **QA DOCUMENTATION PACKAGE**

The Contractor shall be required to submit the QA Documentation in two hard copies and two CD ROMs, as identified in respective quality plan with tick (✓) mark.

9.03.01 Each QA Documentation shall have a project specific Cover Sheet bearing name & identification number of equipment and including an index of its contents with page control on each document.

The QA Documentation file shall be progressively completed by the Supplier's sub-supplier to allow regular reviews by all parties during the manufacturing.

The final quality document will be compiled and issued at the final assembly place of equipment before despatch. However CD-Rom may be issued not later than three weeks.

9.03.02 Typical contents of QA Documentation is as below:-

(a.) Quality Plan

(b.) Material mill test reports on components as specified by the specification and approved Quality Plans.

(c.) Manufacturer / works test reports/results for testing required as per applicable codes and standard referred in the specification and approved Quality Plans.

(d.) Non-destructive examination results /reports including radiography interpretation reports. Sketches/drawings used for indicating the method of traceability of the radiographs to the location on the equipment.

(e.) Heat Treatment Certificate/Record (Time- temperature Chart)

(f.) All the accepted Non-conformance Reports (Major/Minor) / deviation, including complete technical details / repair procedure).

(g.) CHP / Inspection reports duly signed by the Inspector of the Employer and Contractor for the agreed Customer Hold Points.

(h.) Certificate of Conformance (COC) wherever applicable.

(i.) MDCC

9.03.03 NOT USED.

9.03.04 NOT USED.

9.03.05 Similarly, the contractor shall be required to submit two sets (two hard copies and two CD ROMs), containing QA Documentation pertaining to field activities as per Approved Field Quality Plans and other agreed manuals/ procedures, prior to commissioning of individual system.

9.03.06 Before despatch / commissioning of any equipment, the Supplier shall make sure that the corresponding quality document or in the case of protracted phased deliveries, the applicable section of the quality document file is completed. The supplier will then notify the Inspector regarding the readiness of the quality document (or applicable section) for review.

(a.) If the result of the review carried out by the Inspector is satisfactory, the Inspector shall stamp the quality document (or applicable section) for release.

(b.) If the quality document is unsatisfactory, the Supplier shall endeavor to correct the incompleteness, thus allowing to finalize the quality document (or applicable section) by time compatible with the requirements as per contract documents. When it is done, the quality document (or applicable section) is stamped by the Inspector.

(c.) If a decision is made for despatch, whereas all outstanding actions cannot be readily cleared for the release of the quality document by that time, the supplier shall immediately, upon shipment of the equipment, send a copy of the quality document Review Status signed by the Supplier Representative to the Inspector and notify of the committed date for the completion of all outstanding actions & submission. The Inspector shall stamp the quality document for applicable section when it is effectively completed. The submission of QA documentation package shall not be later than 3 weeks after the despatch of equipment.

9.03.07 **TRANSMISSION OF QA DOCUMENTATION**

On release of QA Documentation by Inspector, one set of quality document shall be forwarded to Corporate Quality Assurance Department and other set to respective Project Site of Employer.

For the particular case of phased/part derivatives of equipment, the complete quality document of that particular equipment to the Employer shall be issued not later than 3 weeks after the date of the last delivery of equipment.

9.04.00 **Project Manager's Supervision**

9.04.01 To eliminate delays and avoid disputes and litigation, it is agreed between the parties to the Contract that all matters and questions shall be referred to the Project Manager and without prejudice to the provisions of 'Arbitration' clause in Section GCC of Vol.I, the Contractor shall proceed to comply with the Project Manager's decision.

9.04.02 The work shall be performed under the supervision of the Project Manager. The scope of the duties of the Project Manager pursuant to the Contract, will include but not be limited to the following:

(a.) Interpretation of all the terms and conditions of these documents and specifications:

(b.) Review and interpretation of all the Contractor's drawing, engineering data, etc:

(c.) Witness or his authorised representative to witness tests and trials either at the manufacturer's works or at site, or at any place where work is performed under the contract :

(d.) Inspect, accept or reject any equipment, material and work under the contract:

(e.) Issue certificate of acceptance and/or progressive payment and final payment certificates

(f.) Review and suggest modifications and improvement in completion schedules from time to time, and

(g.) Supervise Quality Assurance Programme implementation at all stages of the works.

9.05.00 **INSPECTION, TESTING AND INSPECTION CERTIFICATES**

9.05.01 The word 'Inspector' shall mean the Project Manager and/or his authorised representative and/or an outside inspection agency acting on behalf of the Employer

to inspect and examine the materials and workmanship of the works during its manufacture or erection.

9.05.02 The Project Manager or his duly authorised representative and/or an outside inspection agency acting on behalf of the Employer shall have access at all reasonable times to inspect and examine the materials and workmanship of the works during its manufacture or erection and if part of the works is being manufactured or assembled on other premises or works, the Contractor shall obtain for the Project Manager and for his duly authorised representative permission to inspect as if the works were manufactured or assembled on the Contractor's own premises or works.

9.05.03 The Contractor shall give the Project Manager/Inspector ten (10) working days written notice of any material being ready for testing. Such tests shall be to the Contractor's account except for the expenses of the Inspector's. The Project Manager/Inspector, unless the witnessing of the tests is virtually waived and confirmed in writing, will attend such tests within ten (10) working days of the date on which the equipment is noticed as being ready for test/inspection failing which the contractor may proceed with test which shall be deemed to have been made in the inspector's presence and he shall forthwith forward to the inspector duly certified copies of test reports in two (2) copies.

9.05.04 The Project Manager or Inspector shall within ten (10) working days from the date of inspection as defined herein give notice in writing to the Contractor, or any objection to any drawings and all or any equipment and workmanship which is in his opinion not in accordance with the contract. The Contractor shall give due consideration to such objections and shall either make modifications that may be necessary to meet the said objections or shall inform in writing to the Project Manager/Inspector giving reasons therein, that no modifications are necessary to comply with the contract.

9.05.05 When the factory tests have been completed at the Contractor's or sub-contractor's works, the Project Manager /Inspector shall issue a certificate to this effect ten (10) working days after completion of tests but if the tests are not witnessed by the Project Manager /Inspectors, the certificate shall be issued within ten (10) working days of the receipt of the Contractor's test certificate by the Project Manager /Inspector. Project Manager /Inspector to issue such a certificate shall not prevent the Contractor from proceeding with the works. The completion of these tests or the issue of the certificates shall not bind the Employer to accept the equipment should it, on further tests after erection be found not to comply with the contract.

9.05.06 In all cases where the contract provides for tests whether at the premises or works of the Contractor or any sub-contractor, the Contractor, except where otherwise specified shall provide free of charge such items as labour, material, electricity, fuel,

water, stores, apparatus and instruments as may be reasonably demanded by the Project Manager /Inspector or his authorised representatives to carry out effectively such tests on the equipment in accordance with the Contractor and shall give facilities to the Project Manager/Inspector or to his authorised representative to accomplish testing.

9.05.07 The inspection by Project Manager / Inspector and issue of Inspection Certificate thereon shall in no way limit the liabilities and responsibilities of the Contractor in respect of the agreed Quality Assurance Programme forming a part of the contract.

9.05.08 To facilitate advance planning of inspection in addition to giving inspection notice as specified at clause no 9.05.03- of this chapter, the Contractor shall furnish quarterly inspection programme indicating schedule dates of inspection at Customer Hold Point and final inspection stages. Updated quarterly inspection plans will be made for each three consecutive months and shall be furnished before beginning of each calendar month.

9.05.09 All inspection, measuring and test equipment used by contractor shall be calibrated periodically depending on its use and criticality of the test/measurement to be done. The Contractor shall maintain all the relevant records of periodic calibration and instrument identification, and shall produce the same for inspection by NTPC. Wherever asked specifically, the contractor shall re-calibrate the measuring/test equipment in the presence of Project Manager / Inspector.

9.06.00 **ASSOCIATED DOCUMENT FOR QUALITY ASSURANCE PROGRAMME:**

9.06.01 List of items requiring Quality Plan & Sub-supplier approval.
Format No. QS-01-QAI-P-01/F3-R0

9.06.02 Status of Quality Plan and Sub-supplier approval
Format No. QS-01-QAI-P-02/F1-R0

9.06.03 Field Welding Schedule Format No.: QS-01-QAI-P-02/F2-R0

9.06.04 Manufacturing Quality Plan Format No.: QS-01-QAI-P-09/F1-R0

9.06.05 Field Quality Plan Format No.: QS-01-QAI-P-09/F2-R0
The above formats are enclosed as Annexure-III to VII

10.00.00 **PRE-COMMISSIONING AND COMMISSIONING FACILITIES**

(a.) As soon as the facilities or part thereof has been completed operationally and structurally and before start-up, each item of the equipment and systems

forming part of facilities shall be thoroughly cleaned and then inspected jointly by the Employer and the Contractor for correctness of and completeness of facility or part thereof and acceptability for initial pre-commissioning tests, commissioning and start-up at Site. The list of pre-commissioning tests to be performed shall be as mutually agreed and included in the Contractor's quality assurance programme as well as those included in Part-D, Section-VI and elsewhere in the Technical Specifications.

(b.) The Contractor's pre-commissioning/ commissioning/start-up engineers, specially identified as far as possible, shall be responsible for carrying out all the pre-commissioning tests at Site. On completion of inspection, checking and after the pre-commissioning tests are satisfactorily over, the commissioning of the complete facilities shall be commenced during which period the complete facilities, equipments shall be operated integral with sub-systems and supporting equipment as a complete plant.

(c.) All piping system shall be flushed, steam blown, air blown as required and cleanliness demonstrated using acceptable industry standards. Procedures to accomplish this work shall be submitted for approval to the Employer six months prior to the respective implementations. The Employer will approve final verification of cleanliness.

(d.) The time consumed in the inspection and checking of the units shall be considered as a part of the erection and installation period.

(e.) The check outs during the pre - commissioning period should be programmed to follow the construction completion schedule. Each equipment/system, as it is completed in construction and turned over to Employer's commissioning (start-up) Engineer(s), should be checked out and cleaned. The checking and inspection of individual systems should then follow a prescribed schedule to be agreed by the Employer.

(f.) The Contractor during initial operation and performance testing shall conduct vibration testing to determine the 'base line' of performance of all plant rotating equipment. These tests shall be conducted when the equipment is running at the base load, peak load as well as lowest sustained operating condition as far as practicable.

(g.) Contractor shall furnish the commissioning organization chart for review & acceptance of employer at least eighteen months prior to the schedule date of synchronization of 1st unit. The chart should contain:

(1.) Biodata including experience of the Commissioning Engineers.

(2.) Role and responsibilities of the Commissioning Organisation members.

(3.) Expected duration of posting of the above Commissioning Engineers at site.

10.02.00 **Initial Operation**

a) On completion of all pre-commissioning activities / tests and as a part of commissioning the complete facilities shall be put on 'Initial Operation' during which period all necessary adjustments shall be made while operating over the full load range enabling the facilities to be made ready for the Guarantee Tests.

b) The 'Initial Operation' of the complete facility as an integral unit shall be conducted for 720 continuous hours. During the period of initial operation of 720 hours, the unit shall operate continuously at full rated load for a period not less than 72 hours.

The Initial Operation shall be considered successful, provided that each item/ part of the facility can operate continuously at the specified operating characteristics, for the period of Initial Operation with all operating parameters within the specified limits and at or near the predicted performance of the equipment/ facility.

The Contractor shall intimate the Employer about the commencement of initial operation and shall furnish adequate notice to the Employer in this respect.

c) Any loss of generation due to constraints attributable to the Employer shall be construed as Deemed Generation.

In the event of test interruptions as a result of Force Majeure or Employer-Caused-Delay during Initial Operation test, where.

(i) The total cumulative interrupted time during the test is more than twenty-four (24) hours.

(ii) The total number of interruptions during the test is more than four (4).

The test shall not be deemed a successful Initial Operation Test.

The interrupted test resulting from Force Majeure or Employer-Caused-Delay shall be extended by an amount of time equal to the cumulative length of the interruptions, including time to return to steady-state operation; the test data for the period of interruptions shall be excluded from analysis; and the test data that were collected both before and after the interruptions shall be included in the analysis.

d) An Initial Operation report comprising of observations and recordings of various parameters to be measured in respect of the above Initial Operation shall be prepared by the Contractor. This report, besides recording the details of the various observations during initial operation shall also include the dates of start and finish of the Initial Operation and shall be signed by the representatives of both the parties. The report shall have sheets, recording all the details of interruptions occurred, adjustments made and any minor repairs done during the Initial Operation. Based on the observations, necessary modifications/repairs to the plant shall be carried out by the Contractor to the full satisfaction of the Employer to enable the latter to accord permission to carry out the Guarantee tests on the facilities. However, minor defects which do not endanger the safe operation of the equipment, shall not be considered as reasons for with holding the aforesaid permission.

(g) **Grid Restriction**

Any loss in generation in terms of power (KW) or energy (KWH) during Initial operation Test due to grid restrictions shall be treated as deemed generation. however, the total cumulative deemed generation shall not exceed 5% of the total generation during the test period failing which the test shall be extended to limit the deemed generation to 5% of the total generation.

11.00.00 **GUARANTEE TESTS**

a) The final test as to prove the Functional Guarantees shall be conducted at Site by the Contractor in presence of the Employer. The contractor's Commissioning, Start-up Engineer shall make the unit ready to conduct such test before start of initial operation. Such test shall be conducted along with Initial Operations.

b) These tests shall be binding on both the parties of the Contract to determine compliance of the equipment with the functional guarantee.

c) For performance/ demonstration tests instrumentations, accuracy class shall be as per specified test codes. The numbers and location of the instruments shall be as per the specified test codes. In addition the values of parameters

shall be logged from the information system provided under Employer's Distributed Digital Control Monitoring and Information system. Test will be conducted at specified load points.

d) Any special equipment, tools and tackles required for the successful completion of the Guarantee Tests shall be provided by the Contractor, free of cost.

e) The Guarantee tests and specific tests to be conducted on equipments have been brought out in detail elsewhere in the specification.

12.00.00 **TAKING OVER**

Upon successful completion of Initial Operations and all the tests conducted to the Employer's satisfaction, the Employer shall issue to the Contractor a Taking over Certificate as a proof of the final acceptance of the equipment. Such certificate shall not unreasonably be with held nor will the Employer delay the issuance thereof, on account of minor omissions or defects which do not affect the commercial operation and/or cause any serious risk to the equipment. Such certificate shall not relieve the Contractor of any of his obligations which otherwise survive, by the terms and conditions of the Contract after issuance of such certificate.

13.00.00 **TRAINING OF EMPLOYER'S PERSONNEL**

13.01.00 The scope of service under training of Employer's engineers shall include a training module in the areas of Operation & Maintenance.

Such training should cover the following areas as a minimum in order to enable these personnel to individually take the responsibility of operating and maintaining the power station in a manner acceptable to the Employer:

(a.) Training for TG and related equipments.

(b.) TG related C&I system like turbine supervisory system (TSS) etc.

(c.) DDCMIS as detailed in Part-B

(d.) Training for Electric Power Supply systems

(e.) Training for power cycle piping / critical piping

13.02.00 The scope of services under training shall also necessarily include training of Employer's Engineering personnel covering entire scope for the package This shall

cover all disciplines viz, Mechanical, Electrical, C&I, & QA etcand shall include all the related areas like Design familiarization, training on product design features and product design softwares of major equipment and systems, engineering, manufacturing, erection, commissioning, training on operating features of equipment, quality assurance and testing, plant visits and visits to manufacturer's works, exposure to various kinds of problems which may be encountered in fabrication, manufacturing, erection, welding etc.

13.03.00 Contractor shall also arrange for training of Employer's personnel in respect of fire detection and protection systems and other Balance of Plant equipments.

13.04.00 Exact details, extent of training and the training schedule shall be finalised based on the Bidder's proposal within two (2) months from placement of award.

13.05.00 In all the above cases, the lodging and boarding of the Employer's personnel shall be at the cost of Bidder. The Bidder shall make all necessary arrangements towards the same.

13.06.00 Take off prices (product wise) should be indicated by the Bidder in the Bid Proposal Sheets. Employer reserves the right to include or exclude these item(s) during placement of Award.

Note:

1. For training purposes, one (1) man month implies 30 working days (excluding all intervening holidays) per person.
2. The total man months in each area shall be divided into suitable number of modules which shall be discussed and finalized during post award stage.
3. Duration of each module shall not be less than 10 (ten) working days out of which 20 % shall be for plant/manufacturers' works visits and 80% shall be class room training.
4. A) Location of class room training for engineering shall be at Design/Engineering office.

   B) Class room training for erection/O&M shall be at location of Manufacturers' works.

TRAINING REQUIRED IN MAN MONTH

Area	Engineering (Man months)	Erection (Man months)	O&M (Man months)

Steam Turbine Generator and its Auxiliaries including electricals	6.5	9.0	23
Station C&I (Control and Instrumentation)	3.5	5.5	10
Total			

Area	Topics	MANDAYS
Condensate Polishing Plant (CPU)	**System/Product Design** - Basic design features including Pre-filters - Theory & principle of operation - Latest technological trends in CPU & Pre-filters and design aspects & Selection criteria. **Plant Visit** - Operational feedback - O&M history / problems related to CPU plant **Visit to Manufacturer's Work** -Manufacturing process of pre-filters and major equipment -Testing facilities **Operation & Maintenance of Plant** -Trouble shooting and fault analysis -Familiarization of special maintenance techniques -Special tool and tackles familiarization	3

14.00.00 **SAFETY ASPECTS DURING CONSTRUCTION AND ERECTION**

In addition to the requirements given in Erection Conditions of Contract (ECC) the following shall also cover:

(a.) Working platforms should be fenced and shall have means of access.

(b.) Ladders in accordance with Employer's safety rules for construction and erection shall be used. Rungs shall not be welded on columns. All the stairs shall be provided with handrails immediately after its erection.

15.00.00 **NOISE LEVEL**

The equivalent 'A' weighted sound pressure level measured at a height of 1.5 m above floor level in elevation and at a distance of one (1) metre horizontally from the nearest surface of any equipment / machine, furnished and installed under these specifications, expressed in decibels to a reference of 0.0002 microbar, shall not exceed 85 dBA except for

(a.) Safety valves and associated vent pipes for which it shall not exceed 105 dBA-115 dBA.

(b.) Regulating drain valves in which case it shall be limited to 90 dBA-115dBA.

(c.) TG unit in which case it shall not exceed 90 dBA.

(d.) For HP-LP bypass valves and other intermittantly operating control valves, the noise level shall be within the limit of 90 dBA.

(e) For BFP motor, the noise level shall be within the limit of 90 dBA

16.00.00 **PACKAGING AND TRANSPORTATION**

All the equipments shall be suitably protected, coated, covered or boxed and crated to prevent damage or deterioration during transit, handling and storage at Site till the time of erection. While packing all the materials, the limitation from the point of view of the sizes of railway wagons available in India should be taken account of. The Contractor shall be responsible for any loss or damage during transportation, handling and storage due to improper packing. The Contractor shall ascertain the availability of Railway wagon sizes from the Indian Railways or any other agency concerned in India well before effecting despatch of equipment. Before despatch it shall be ensured that complete processing and manufacturing of the components is carried out at shop, only restricted by transport limitation, in order to ensure that site works like grinding, welding, cutting & preassembly to bare minimum. The Employer's Inspector shall have right to insist for completion of works in shops before despatch of materials for transportation.

17.00.00 **ELECTRICAL ENCLOSURE**

All electrical equipments and devices, including insulation, heating and ventilation devices shall be designed for ambient temperature and a maximum relative humidity as specified elsewhere in the specification,

18.00.00 **INSTRUMENTATION AND CONTROL**

All instrumentation and control systems/ equipment/ devices/ components, furnished under this contract shall be in accordance with the requirements stated herein, unless otherwise specified in the detailed specifications.

18.01.00 All instrument scales and charts shall be calibrated and printed in metric units and shall have linear graduation. The ranges shall be selected to have the normal reading at 75% of full scale.

All scales and charts shall be calibrated and printed in Metric Units as follows:

a)	Temperature	-	Degree centigrade (deg C)
b)	Pressure	-	Kilograms per square centimetre (Kg/cm2). Pressure instrument shall have the unit suffixed with 'a' to indicate absolute pressure. If nothing is there, that will mean that the indicated pressure is gauge pressure.
c)	Draught	-	Millimetres of water column (mm wc).
d)	Vacuum	-	Millimeters of mercury column (mm Hg) or water column (mm Wcl).
e)	Flow (Gas)	-	Tonnes/ hour
f)	Flow (Steam)	-	Tonnes/ hour
g)	Flow (Liquid)	-	Tonnes / hour
h)	Flow base	-	760 mm Hg. 15 deg.C
i)	Density	-	Grams per cubic centimetre.

18.02.00 All instruments and control devices provided on panels shall be of miniaturized design, suitable for modular flush mounting on panels with front draw out facility and flexible plug-in connection at rear.

18.03.00 **NOT USED**.

19.00.00 **ELECTRICAL NOISE CONTROL**

The equipment furnished by the Contractor shall incorporate necessary techniques to eliminate measurement and control problems caused by electrical noise. Areas in Contractor's equipment which are vulnerable to electrical noise shall be hardened to eliminate possible problems. Any additional equipment, services required for effectively eliminating the noise problems shall be included in the proposal.

20.00.00 **INSTRUMENT AIR SYSTEM**

The instrument air supply system as supplied by the Contractor for various pneumatic control & instrumentation devices like pneumatic actuators, power cylinders, E/P converters, piping / tubing etc. shall be as per the details furnished elsewhere.

Each pneumatic instrument shall have an individual air shut - off valve. The pressure regulating valve shall be equipped with an internal filter, a 50 mm pressure gauge and a built-in filter housing blow down valve.

21.00.00 **TAPPING POINTS FOR MEASUREMENTS**

Tapping points shall include probes, wherever applicable, for analytical measurements and sampling.

For direct temperature measurement of all working media, one stub with internal threading of approved pattern shall be provided along with suitable plug and washer. The Contractor will be intimated about thread standard to be adopted.

The following shall be provided on equipment by the Contractor. The standard which is to be adopted, will be intimated to the Contractor.

(a.) Temperature test pockets with stub and thermowell

(b.) Pressure test pockets

22.00.00 SYSTEM DOCUMENTATION

The Bidder shall provide drawings, system overview & description, hardware/ software details, technical literature, functional & hardware schemes, bill of material, parts list, interconnection diagrams, data sheets, erection/ installation/

commissioning procedures, instruction/ operating manuals, etc. for each of the C& I system / sub-systems/ equipment supplied under this package. The documentation shall include complete details of the C&I systems/ sub-systems/ equipment to enable review by Employer during detailed engineering stage and to provide information to plant personnel for operation & Maintenance (including quick diagnostics & trouble shooting) of these C&I systems/ sub-systems/ equipment at site. The minimum documentation requirements for C&I systems shall be as stipulated under C&I "Techncial Data Sheets" Part of specifications. In addition to this, system documentation for DDCMIS shall include as a minimum to that specified elsewhere in the Technical Specification.

The exact format, submission schedule and contents of various documents shall be as finalised during detailed engineering stage.

22.01.00 Bill of material (instrument list) for all C&I equipment/ devices shall be furnished by the bidder in standard formats as approved by the Employer.

23.00.00 **MAINTENANCE MANUALS OF ELECTRONIC MODULES**

The Contractor shall have to furnish two (2) sets of all maintenance manual of each and every electronic card/module as employed on the various systems and equipment including peripherals etc., offered by him. The Contractor will also have to furnish the data regarding the expected failure rate of various modules and other system components. Further, the contractor shall furnish a set of operating manuals which should include block diagrams, make, model/type, details wiring and external connection drawings etc as required to do the testing and maintenance of the electronic modules.

ANNEXURE-I

S.NO.	DESCRIPTION OF DOCUMENTS	NO OF PRINTS	NO. OF CD-ROMs
1.	PLANT DEFINITION MANUAL-	2 sets	4 CD-ROMs
2.	Drawings "FOR APPROVAL"		
	i) Layout drawings / P&IDs	6	2 CD - ROMs
	ii) Other drawings	2	2 CD - ROMs
3.	Drawings "FOR INFORMATION"	2	2 CD - ROMs
4.	Drawings "FINAL DRAWING"	15	4 CD-ROMs
5.	Drawings "AS BUILT "	15	4 CD-ROMs
6	DATASHEETS, DESIGN CALCULATIONS, PURCHASE SPECIFICATIONS, etc. and Other type of documents		
	i) For Approval	2	2 CD - ROMs
	ii) FINAL	15	4 CD-ROMs -
	iii) Analysis reports of equip-ments/ piping/ structures components/ systems employing software packages as detailed in the specifications	2	2 CD - ROMs
7.	Erection manual "1st Submission"	4 Sets	2 CD - ROMs
8	Erection manual "FINAL"	4 Sets	4 CD ROMs
9	Operation & Maintenance manual "1st submission"	4	2 CD - ROMs

S.NO.	DESCRIPTION OF DOCUMENTS	NO OF PRINTS	NO. OF CD-ROMs
10	Operation & Maintenance manual "FINAL"	4 Sets	4 CD-ROMs
11	Plant Hand Book "1st Submission"	4 Sets	2 CD ROMs
12	Plant Hand Book "FINAL"	4 Sets	4 CD ROMs
13	Commissioning and Performance Procedure manual "1st Submission"	4 Sets	2 CD-ROMs
14	Commissioning and Performance Procedure manual "FINAL"	4 Sets	4 CD ROMs
15	Performance and Functional GURANTEES TEST REPORT	4 Sets	4 CD ROMs
16	Project completion report	15	4 CD ROMs
17	QA programme including Organi-sation for implement-ation and QA systemmanual (with revision-servicing)	1	1 CD ROM
18	Vendor details in respect of pro-posed vendors including contractor's evaluation report.	1	1 CD ROM
19	Manufacturing QPs, Field QPs, Field welding schedules and their reference documents like test procedures, WPS, PQR etc.		
	(i) For review/comment	2	2 CD-ROMs
	(ii) For final approval	2	2 CD ROMs

S.NO.	DESCRIPTION OF DOCUMENTS	NO OF PRINTS	NO. OF CD-ROMs
20	Welding Manual, HeatTreatment Manuals, Storage & preservation manuals		
	1st Submission	4 Sets	2 CD ROMs sets
	Final	4 sets	4 CD ROMs
21	QA Documentation Packagefor items / equipmentmanufactured and and despatched to site	2 sets	4 CD ROMs
22	QA Documentation Package for field activities on equipment / systems at site	2 sets	4 CD ROMS

ANNEXURE-II

LIST OF CODES AND STANDARDS

Indian Standards	Title	International and Internationally recognised standards
IS:277	Galvanised steel sheets (plain or corrugated)	
IS:655	Specification for metal air duct	
IS:800	Code of practice for use of structural steel in general building construction	BS 449:1969 BS 5950 ASA A57, 1-1952
IS:807	Code of practice for design, manufacture, erection and testing (Structural portion) of cranes and hoists 6588 (Issued by Standards Associa-tion of Australia). DIN 120:1936 (Sheet 1) DIN 120:1936 (Sheet 2) 327 part-I, 1951 BS 466 part-II, 1960 BS 644:1960 BS 1757:1951 BS 2573:part-I:1960	Draft Revision of A.S. NO. CS.2 SAA Crane and Hoist code Doc:No. BU/4 Rev
IS:875	Code of practice for design loads (other than earthquake) for buildings and structures Leading standards (issued by Canadian Standard) DIN-1055-1955 (Issued by ASA)	National Building code of Canada (1953)-Part-IV Design section 4.1

IS:1239 Part-I	Mild steel tubes	(ISO/R 65-1957) (ISO/R-64-1958) (ISO/R-65-1958) (BS 1387 : 1957)
IS:1239 Part-II	Mild steel tubulars and other wrought steel pipe fittings	BS 1387 : 1967 BS 1387 :1967 BS 1740 :1965
IS:2825	Code for unfired vessels	
IS:1520	Horizontal centrifugal pumps for clear cold and fresh water	
IS:1600	Code for practice for performance of constant speed IC Engines for general purpose	
IS:1601	Specification for perform-ance of constant speed IC Engines for general Purpose	
IS:1893	Criteria for earthquake resistant design of structures	
IS1978-1971	Line Pipe April 1969.	API Standards 5L
IS:2254-1970	Dimensions of vertical shaft motor for pumps	IEC Pub 72-1 part I NEMA Pub MG 1 1954
IS:2266	Steel wire ropes for general engineering purposes	BS :302 : 1968
IS:2312	Propellant type Ventilation fans	

IS:2365	Steel wire suspension ropes for lifts and hoists	BS : 1957
IS:3346	Method for the determin-ation of thermal conductivity of thermal insulation materials (two slab guarded hot plate method)	DIN 52612 (Deutscher Normenausschuss) ASTM C 163-1964 (American Society of Testing and materials) ASTM C 167-1974 ASTM C 177-1963
IS:3354	Outline dimensions for electric lifts.	
IS:3401	Silica gel	
IS:3588	Specification for electrical axial flow fans	
IS:3589	Electrically welded steel pipes for water, gas and sewage (200mm to 2000 mm Nominal Diametre)	
IS:3677	Unbonded rock and slag wool for thermal insulation	
IS:3815	Point hook with shank for general engineering purposes	BS 482 - 1968 Doc.:67/3 1284 (Revision of BS 2903) (Issued BS)
IS:3895	Specification for monocry-stallines semiconductor rectifier cells and stacks	
IS:3963	Roof extractor unit	
IS:3975	Mild steel wires, strips and tapes for armouring cables	

IS:4503	Shell and tube type heat Exchanger	
IS:4540	Specification for monory-stallines rectifire assembly equipment	
IS:4671	Expanded polystyrene for thermal insulation purpose	
IS:4736	Hot dip zinc coating on steel tubes	
IS:4894	Centrifugal fans	
IS:5456	Code of practice for testing of positive displacement type air compressors and exhauster (For Test Tolerance Only)	
IS:5749	Forged ramshorn hooks	Entwurf DIN 15402 Blett 1 Entwurf DIN 15402 BS 3017-1958
IS:6392	Steel pipe flanges	BS 4504 : 1969
IS:6524 Part-I	Code of practice for design of tower cranes Static and rail mounted	BS 2799 : 1956
IS:7098	Cross linked Polyethylene insulated PVC sheathed cables	Standard No. 1 to IPCEA (USA) Pub. No. 5-66-524
IS:7373	Specification for wrought aluminium and aluminium sheet and strips	
IS:7938	Air receivers for compressed air installation	

ISO:1217	Displacement compressor-Acceplance test
ASHRAE-33	Methods of testing for rating of forced circulation air cooling and air heating coils.
ASHRAE-52-76	Air cleaning device used in general ventilation for removing particle matter.
ASHRAE-22-72	Method of testing for rating of water cooled refrigerant condensers.
ASHRAE 23-67	Methods of testing for rating of positive displacement refrigerant compressors.
ARI-450-6	Standard for water cooled refrigerant condensers.
ARI-550	Standard for centrifugal water chilling packages.
ARI-410	Standard for forced circulation air cooling and air heating coils
ARI-430/435	Central station AHU/Application of Central Station AHU
BS:848 (Part-1,2)	Fans
BS:400	Low carbon steel cylinders for the storage & transport of permanent gases.
BS:401	Low carbon steel cylinders for the storage & transport of liquified gases.
CTI Code ACT-105	Acceptance test code for Water Cooling Tower.
ANSI-31.5	Refrigerant piping
ASME-PTC-23-1958	Atmospheric Water Cooling Equipment
AMCA A-21C	Test Code for air moving devices
API:618	Reciprocating Compressor for general refinary services.

HYDRAULIC INSTITUTE STANDARDS.

HYDRANT SYSTEM MANUALS OF TAC.

TAC MANUALS OF SPRAY SYSTEM

NFPA USA/ NSC UK/ UL USA/ FM USA STANDARDS.

INDIAN EXPLOSIVES ACT.

INDIAN FACTORIES ACT.

STANDARD OF TUBULAR EXCHANGER MANUFACTURER'S ASSOCIATION.

CODE AND STANDARD FOR CIVIL WORKS

Some of the applicable Standards, Codes and references are as follows:

Excavation & Filling

IS: 2720 (Part-II, IV TO VIII, XIV, XXI, XXIII, XXIV, XXVII TO XXIX, XL) Methods of test for soils-determination for water content etc.

IS: 4701 Code of practice for earth work on canals.

IS: 9758 Guide lines for Dewatering during construction.

IS: 10379 Code of practice for field control of moisture and compaction of soils for embankment and sub-grade.

Properties, Storage and Handling of Common Building Materials

IS: 269 Specification for ordinary Portland cement, 33 grade.

IS: 383 Specification for coarse and fine aggregates from natural sources for concrete.

IS: 432 Specification for mild steel and (Parts 1&2) medium tensile steel bars and hard-drawn steel wires for concrete reinforcement.

IS: 455 Specification for Portland slag cement.

IS: 702 Specification for Industrial bitumen.

IS: 712 Specification for building limes.

IS: 808	Rolled steel Beam channel and angle sections.
IS: 1077	Specification for common burnt clay building bricks.
IS: 1161	Specification of steel tubes for structural purposes.
IS: 1363	Hexagon head Bolts, Screws and nuts of production grade C.
IS: 1364	Hexagon head Bolts, Screws and Nuts of Production grade A & B.
IS: 1367	Technical supply conditions for Threaded fasteners.
IS: 1489	Specification for Portland-pozzolana cement:
(Part-I)	Fly ash based.
(Part-II)	Calcined clay based.
IS: 1542	Specification for sand for plaster.
IS: 1566	Specification for hard-drawn steel wire fabric for concrete reinforcement.
IS: 1786	Specification for high strength deformed bars for concrete reinforcement.
IS: 2062	Specification for steel for general structural purposes.
IS: 2116	Specification for sand for masonry mortars.
IS: 2386 (Parts-I to VIII)	Testing of aggregates for concrete.
IS: 3150	Hexagonal wire netting for general purpose.
IS: 3495 (Parts-I to IV)	Methods of tests of burnt clay building bricks.
IS: 3812	Specification for fly ash, for use as pozzolana and admixture.
IS: 4031	Methods of physical tests for hydraulic cement.
IS: 4032	Methods of chemical analysis of hydraulic cement.

IS: 4082	Recommendations on stacking and storage of construction materials at site.
IS: 8112	Specification for 43 grade ordinary portland cement.
IS: 8500	Medium and high strength structural steel.
IS: 12269	53 grade ordinary portland cement.
IS: 12894	Specification for Fly ash lime bricks.

Cast-In-Situ Concrete and Allied Works

IS: 280	Specification for mild steel wire for general engineering purposes.
IS: 456	Code of practice for plain and reinforced concrete.
IS: 457	Code of practice for general construction of plain & reinforced concrete for dams & other massive structures.
IS: 516	Method of test for strength of concrete.
IS: 650	Specification for standard sand for testing of cement.
IS: 1199	Methods of sampling and analysis of concrete.
IS: 1791	General requirements for batch type concrete mixers.
IS: 1838 (Part-I)	Specification for preformed fillers for expansion joints in concrete pavements and structures (non-extruding and resilient type).
IS: 2204	Code of practice for construction of reinforced concrete shell roof.
IS: 2210	Criteria for the design of reinforced concrete shell structures and folded plates.
IS: 2438	Specification for roller pan mixer.
IS: 2502	Code of practice for bending and fixing of bars for concrete reinforcement.
IS: 2505	General requirements for concrete vibrators, immersion type.

IS: 2506	General requirements for concrete vibrators, screed board type.
IS: 2514	Specification for concrete vibrating tables.
IS: 2645	Specification for Integral cement water proofing compounds.
IS: 2722	Specification for portable swing weigh batches for concrete. (single and double bucket type)
IS: 2750	Specification for Steel scaffolding.
IS: 2751	Code of practice for welding of mild steel plain and deformed bars for reinforced concrete construction.
IS: 3025	Methods of sampling and test waste water.
IS: 3366	Specification for Pan vibrators.
IS: 3370 (Part I to IV)	Code of practice for concrete structures for the storage of liquids.
IS: 3414	Code of practice for design and installation of joints in buildings.
IS: 3550	Methods of test for routine control for water used in industry.
IS: 3558	Code of practice for use of immersion vibrators for consolidating concrete.
IS: 4014 (Parts I & II)	Code of practice for steel tubular scaffolding.
IS: 4326	Code of practice for earthquake resistant design and construction of buildings.
IS: 4461	Code of practice for joints in surface hydro-electric power stations.
IS: 4656	Specification for form vibrators for concrete.
IS: 4925	Specification for batching and mixing plant.
IS: 4990	Specification for plywood for concrete shuttering work.

IS: 4995 (Parts I & II)	Criteria for design of reinforced concrete bins for the storage of granular and powdery materials.
IS: 5256	Code or practice for sealing joints in concrete lining on canals.
IS: 5525	Recommendations for detailing of reinforcement in reinforced concrete work.
IS: 5624	Specification for foundation bolts.
IS: 6461	Glossary of terms relating to cement concrete.
IS: 6494	Code of practice for water proofing of underground water reservoirs and swimming pools.
IS: 6509	Code of practice for installation of joints in concrete pavements.
IS: 7861	Code of practice for extreme weather concreting. (Parts I & II)
IS: 9012	Recommended practice for shot concreting.
IS: 9103	Specification for admixtures for concrete.
IS: 9417	Recommendations for welding cold worked steel bars for reinforced concrete construction.
IS: 10262	Recommended guidelines for concrete mix design.
IS: 11384	Code of practice for composite construction in structural steel and concrete.
IS: 11504	Criteria for structural design of reinforced concrete natural draught cooling towers.
IS: 12118	Specification for two-parts poly sulphide.
IS: 12200	Code of practice for provision of water stops at transverse contraction joints in masonry and concrete dams.
IS: 13311	Method of non-destructive testing of concrete.
Part-1	Ultrasonic pulse velocity.

Part-2	Rebound hammer.
SP:23	Handbook of concrete mixes
SP: 24	Explanatory Handbook on IS: 456-1978
SP: 34	Handbook on concrete reinforcement and detailing.

Precast Concrete Works

SP: 7(PartVI/	National Building Code- Structural design of prefabrication and Sec.7) systems building.
IS: 10297	Code of practice for design and construction of floors and roofs using precast reinforced/prestressed concrete ribbed or cored slab units.
IS: 10505	Code of practice for construction of floors and roofs using pre-cast reinforced concrete units.

Masonary and Allied Works

IS: 1905	Code of Practice for Structural Safety of Buildings-Masonry walls.
IS: 2212	Code of Practice for Brickwork.
IS: 2250	Code of Practice for Preparation and use of Masonry Mortar.
SP: 20	Explanatory hand book on masonry code.

Sheeting Works

IS:277	Galvanised steel sheets (plain or corrugated).
IS: 459	Unreinforced corrugated and semi-corrugated asbestos cement sheets.
IS: 513	Cold-rolled carbon steel sheets.
IS: 730	Specification for fixing accessories for corrugated sheet roofing.

IS: 1626	Specification for Asbestos cement building pipes and pipe fittings, gutters and gutter fittings and roofing fittings.
IS: 2527	Code of practice for fixing rain water gutters and down pipe for roof drainage.
IS: 3007	Code of practice for laying of asbestos cement sheets.
IS: 5913	Methods of test for asbestos cement products.
IS: 7178	Technical supply conditions for tapping screw.
IS: 8183	Bonded mineral wool.
IS: 8869	Washers for corrugated sheet roofing.
IS: 12093	Code of practice for laying and fixing of sloped roof covering using plain and corrugated galvanised steel sheets.
IS: 12866	Plastic translucent sheets made from thermosetting polyster resin (glass fibre reinforced).
IS: 14246	Specification for continuously pre-painted galvanised steel sheets and coils.

Fabrication and Erection of Structural Steel Work

IS: 2016	Specification for plain washers.
IS: 814	Specification for covered Electrodes for Metal Arc Welding for weld steel.
IS: 1852	Specification for Rolling and Cutting Tolerances for Hot rolled steel products.
IS: 3502	Specifications for chequered plate.
IS: 6911	Specification for stainless steel plate, sheet and strip.
IS: 3757	Specification for high strength structural bolts
IS: 6623	Specification for high strength structural nuts.

IS: 6649	High Tensile friction grip washers.
IS: 800	Code of practice for use of structural steel in general building construction.
IS: 816	Code of practice for use of Metal Arc Welding for General Construction.
IS: 4000	Code of practice for assembly of structural joints using high tensile friction grip fasteners.
IS: 9595	Code of procedure of Manual Metal Arc Welding of Mild Steel.
IS: 817	Code of practice for Training and Testing of Metal Arc Welders.
IS: 1811	Qualifying tests for Metal Arc Welders (engaged in welding structures other than pipes).
IS: 9178	Criteria for Design of steel bins for storage of Bulk Materials.
IS: 9006	Recommended Practice for Welding of Clad Steel.
IS: 7215	Tolerances for fabrication steel structures.
IS: 12843	Tolerance for erection of structural steel.
IS: 4353	Recommendations for submerged arc welding of mild steel and low alloy steels.
SP: 6 (Part 1 to 7)	ISI Hand book for structural Engineers.
IS: 1608	Method of Tensile Testing of Steel products other than sheets, strip, wire and tube.
IS: 1599	Method of Bend Tests for Steel products other than sheet, strip, wire and tube
IS : 228	Methods of chemical Analysis of pig iron, cast iron and plain carbon and low alloy steel.
IS : 2595	Code of Practice for Radio graphic testing.

IS : 1182	Recommended practice for Radiographic Examination of fusion welded butt joints in steel plates.
IS : 3664	Code of practice for Ultra sonic Testing by pulse echo method.
IS : 3613	Acceptance tests for wire flux combination for submerged Arc Welding.
IS : 3658	Code of practice for Liquid penetrant Flaw Detection.
IS : 5334	Code of practice for Magnetic Particle Flaw Detection of Welds.

Plastering and Allied Works

IS : 1635	Code of practice for field slaking of Building lime and preparation of putty.
IS : 1661	Application of cement and cement lime plaster finishes.
IS : 2333	Plaster-of-paris.
IS : 2402	Code of practice for external rendered finishes.
IS : 2547	Gypsum building plaster.
IS : 3150	Hexagonal wire netting for general purpose.

Acid and Alkali Resistant Lining

IS : 158	Ready mixed paint, brushing, bituminous, black, lead free, acid, alkali & heat resisting.
IS : 412	Specification for expanded metal steel sheets for general purpose.
IS : 4441	Code of practice for use of silicate type chemical resistant mortars.
IS : 4443	Code of practice for use of resin type chemical resistant mortars.
IS : 4456	Method of test for chemical resistant tiles. (Part I & II)

IS : 4457	Specification for ceramic unglazed vitreous acid resistant tiles.
IS : 4832	Specification for chemical resistant mortars.
	Part I Silicate type
	Part II Resin type
	Part III Sulphur type
IS : 4860	Specification for acid resistant bricks.
IS : 9510	Specification for bitumasitc, Acid resisting grade.

Water Supply, Drainage and Sanitation

IS : 458	Specification for concrete pipes.
IS : 554	Dimensions for pipe threads, where pressure tight joints are made on thread.
IS : 651	Specification for salt glazed stoneware pipes.
IS : 774	Flushing cisterns for water closets and urinals.
IS : 775	Cast iron brackets and supports for wash basins and sinks.
IS : 778	Copper alloy gate, globe and check valves for water works purposes.
IS : 781	Cast copper alloy screw down bib taps and stop valves for water services.
IS : 782	Caulking lead.
IS : 783	Code of practice for laying of concrete pipes.
IS : 1172	Basic requirements for water supply, drainage and sanitation.
IS : 1230	Cast iron rain water pipes and fittings.
IS : 1239	Mild steel tubes, tubulars and other wrought steel fittings.

IS : 1536	Centrifugally cast (Spun) iron pressure pipes for water, gas and sewage.
IS : 1537	Vertically cast iron pressure pipes for water, gas and sewage.
IS : 1538	Cast iron fittings for pressure pipe for water, gas and sewage.
IS : 1703	Ball valves (horizontal plunger type) including float for water supply purposes.
IS : 1726	Cast iron manhole covers and frames.
IS : 1729	Sand cast iron spigot and socket, soil, water and ventilating pipes, fittings and accessories.
IS : 1742	Code of practice for building drainage.
IS : 1795	Pillar taps for water supply purposes.
IS : 1879	Malleable cast iron pipe fittings.
IS : 2064	Code of practice for selection, installation and maintenance of sanitary appliances.
IS : 2065	Code of practice for water supply in building.
IS : 2326	Automatic flushing cisterns for urinals.
IS : 2470 (Part-I & II)	Code of practice for installation of septic tanks.
IS : 2501	Copper tubes for general engineering purposes.
IS : 2548	Plastic seat and cover for water-closets.
IS : 2556 (Part 1 to 15)	Vitreous sanitary appliances (vitreous china).
IS : 2963	Non-ferrous waste fittings for wash basins and sinks.
IS : 3114	Code of practice for laying of cast iron pipes.

IS : 3311	Waste plug and its accessories for sinks and wash basins.
IS : 3438	Silvered glass mirrors for general purposes.
IS : 3486	Cast iron spigot and socket drain pipes.
IS : 3589	Electrically welded steel pipes for water, gas and sewage (200mm to 2000mm nominal diameter).
IS : 3989	Centrifugally cast (Spun) iron spigot and socket soil, waste and ventilating pipes, fittings and accessories.
IS : 4111 (Part I to IV)	Code of practice for ancillary structure in sewerage system.
IS : 4127	Code of practice for laying of glazed stone-ware pipes.
IS : 4764	Tolerance limits for sewage effluents discharged into inland-surface waters.
IS : 4827	Electro plated coating of nickel and chromium on copper and copper alloys.
IS : 5329	Code of practice for sanitary pipe work above ground for buildings.
IS : 5382	Rubber sealing rings for gas mains, water mains and sewers.
IS : 5822	Code of practice for laying of welded steel pipes for water supply.
IS : 5961	Cast iron grating for drainage purpose.
IS : 7740	Code of practice for road gullies.
IS : 8931	Cast copper alloy fancy bib taps and stop valves for water services.
IS : 8934	Cast copper alloy fancy pillar taps for water services.
IS : 9762	Polyethylene floats for ball valves.

IS : 10446	Glossary of terms for water supply and sanitation.
IS : 10592	Industrial emergency showers, eye and face fountains and combination units.
IS : 12592	Specification for precast concrete manhole covers and frames.
IS : 12701	Rotational moulded polyethylene water storage tanks.
SP: 35	Hand book on water supply and drainage.
-	Manual on Sewerage and sewage treatment (Published by CPH & EEO) As updated.

Doors, Windows and Allied Works

IS : 204	Tower Bolts
Part-I	Ferrous metals.
Part-II	Nonferrous metals.
IS : 208	Door Handles.
IS : 281	Mild steel sliding door bolts for use with padlocks.
IS : 362	Parliament Hinges.
IS : 420	Specification for putty, for use on metal frames.
IS : 1003 Part-I door	Specification for timber panelled and glazed shutters- (Part-I) shutters.
IS : 1038	Steel doors, windows and ventilators.
IS : 1081	Code of practice for fixing and glazing of metal (steel and aluminium) doors, windows and ventilators.
IS : 1341	Steel butt hinges.
IS : 1361	Steel windows for industrial buildings.
IS : 1823	Floor door stoppers.

IS : 1868	Anodic coatings on Aluminium and its alloys.
IS : 2202 (Part-II)	Specification for wooden flush door shutters (solid core type); particle board face panels and hard board face panels
IS:2209	Mortice locks (vertical type).
IS:2553	Safety glass
IS:2835	Flat transparent sheet glass.
IS:3548	Code of practice for glazing in buildings.
IS:3564	Door closers (Hydraulically regulated).
IS : 3614	Fire check doors; plate, metal covered and rolling type.
IS:4351	Steel door frames.
IS:5187	Flush bolts.
IS:5437	Wired and figured glass
IS:6248	Metal rolling shutters and rolling grills.
IS:6315	Floor springs (hydraulically regulated) for heavy doors.
IS:7196	Hold fasts.
IS:7452	Hot rolled steel sections for doors, windows and ventilators.
IS:10019	Mild steel stays and fasteners.
IS:10451	Steel sliding shutters (top hung type).
IS:10521	Collapsible gates.

Roof Water Proofing and AlliedWorks

IS:1203	Methods of testing tar and bitumen.

IS:1322	Specification for bitumen felts for water proofing and damp proofing.
IS:1346	Code of practice for water proofing of roofs with bitumen felts.
IS:1580	Specification for bituminous compound for water proofing and caulking purposes.
IS:3067	Code of practice for general design details and preparatory work for damp proofing and water proofing of buildings.
IS:3384	Specification for bitumen primer for use in water proofing and damp proofing.

Floor Finishes and Allied Works

IS:1237	Specification for cement concrete flooring tiles.
IS:1443	Code of practice for laying and finishing of cement concrete flooring tiles.
IS:2114	Code of practice for laying in-situ terrazzo floor finish.
IS:2571	Code of practice for laying in-situ cement concrete flooring.
IS:3462	Specification for unbacked flexible PVC flooring.
IS:4971	Recommendations for selection of industrial floor finishes.
IS:5318	Code of practice for laying of flexible PVC sheet and tile flooring.
IS:8042	Specification for white portland cement.
IS:13801	Specification for chequered cement concrete flooring tiles.

Painting and Allied Works

IS:162	Specification for fire resisting silicate type, brushing, for use on wood, colour as required.
IS:1477	Code of practice for painting of ferrous metals in buildings.
Part-I	Pretreatment.

Part-II	Painting.
IS:1650	Specification for colours for building and decorative finishes.
IS:2074	Specification for red oxide-zinc chrome, priming, ready mixed paint air drying.
IS:2338	Code of practice for finishing of wood and wood based materials.
Part-I	Operations and workmanship
Part-II	Schedules
IS:2395	Code of practice for painting concrete, masonry and plaster surfaces.
Part-I	Operations and workmanship.
Part-II	Schedule.
IS:2524	Code of practice for painting of nonferrous metals in buildings.
Part-I	Pretreatment.
Part-II	Painting.
IS:2932	Specification of synthetic enamel paint, exterior, under-coating and finishing.
IS:2933	Specification enamel paint, under coating and finishing.
IS:4759	Code of practice for hot dip zinc coating on structural steel and other allied products.
IS:5410	Specification for cement paint
IS:5411 (Part-I)	Specification for plastic emulsion paint-for exterior use
IS:6278	Code of practices for white washing and colour washing.
IS:10403	Glossary of terms relating to building finishes.
Piling and Foundation	
IS:1080	Code of practice for design and construction of simple spread foundations.

IS:1904	Code of practice for design and construction of foundations in Soils; General Requirements.
IS:2911	Code of practice for designs and construction of Pile foundations (Relevant Parts).
IS:2950	Code of practice for designs and construction of Raft
(Part-I)	foundation.
IS:2974	Code of practice for design and construction of machine
(Part-I TO V)	foundations.
IS:6403	Code of practice for determination of Allowable Bearing pressure on Shallow foundation.
IS:8009	Code of practice for calculation of settlement of foundation subjected to symmetrical vertical loads.
Part-I	Shallow foundations.
Part-II	Deep foundations.
IS:12070	Code of practice for design and construction of shallow foundations on rocks.
DIN:4024	Flexible supporting structures for machines with rotating machines.
VDI:2056	Criteria for assessing mechanical vibrations of machines.
VDI:2060	Criteria for assessing rotating imbalances in machines.
Stop Log and Trash Rack	
IS:4622	Recommendations for fixed - wheel gates structural design.
IS:5620	Recommendations for structural design criteria for low head slide gates.
IS:11388	Recommendations for design of trash rack for intakes.
IS:11855	General requirements for rubber seals for hydraulic gates.
Roads	
IRC:5	Standard specifications and Code of practice for road bridges, section-I general Features of Design.
IRC:14	Recommended practice of 2cm thick bitumen and tar carpets.
IRC:16	Specification for priming of base course with bituminous primers.

IRC:19	Standard specifications and code of practice for water bound macadam.
IRC:21	Standard specifications and Code of practice for road bridges, section-III - Cement concrete (plain and reinforced).
IRC:34	Recommendations for road construction in waterlogged areas.
IRC:36	Recommended practice for the construction of earth embankments for road works.
IRC:37	Guidelines for the Design of flexible pavements.
IRC:56	Recommended practice for treatment of embankment slopes for erosion control.
IRC:73	Geometric design standards for rural (non-urban) highways.
IRC:86	Geometric Design standards for urban roads in plains.
IRC:SP:13	Guidelines for the design of small bridges & culverts.
IRC - Public-	Ministry of Surface Transport (Roads Wing), Specifications
ation	for road and bridge works.
IS:73	Specification for paving bitumen
Loadings	
IS:875	Code of practice for design loads other than earthquake) for
(Pt. I to V)	buildings and structures.
IS:1893	Criteria for earthquake resistant design of structures.
IS:4091	Code of Practice for design and construction of foundation for transmission line towers & poles.
IRC:6	Standard specifications & code of practice for road bridges, Section-II Loads and stresses.
M.O.T.	Deptt. of railways Bridge Rules.
Safety	
IS:3696	Safety code for scaffolds and ladders.
(Part I & II)	
IS:3764	Safety code for excavation work.
IS:4081	Safety code for blasting and related drilling operations.
IS:4130	Safety code for demolition of buildings.

IS:5121	Safety code for piling and other deep foundations.
IS:5916	Safety code for construction involving use of hot bituminous materials.
IS:7205	Safety code for erection on structural steelwork.
IS:7293	Safety code for working with construction machinery.
IS:7969	Safety code for handling and storage of building materials
IS:11769	Guidelines for safe use of products containing asbestos.

- Indian Explosives Act. 1940 as updated.

Architectural design of buildings

SP:7	National Building Code of India
SP:41	Hand book on functional requirements of buildings (other than industrial buildings)

Miscellaneous

IS:802	Code of practice for use of structural steel in
(Relevant parts)	overhead transmission line towers.
IS:803	Code of practice for design, fabrication and erection of vertical mild steel cylindrically welded in storage tanks.
IS:10430	Creteria for design of lined canals and liner for selection of type of lining.
IS:11592	Code of practice for selection and design of belt conveyors.
IS:12867	PVC handrails covers.
CIRIA	Design and construction of buried thin-wall pipes.
Publication	

REFERENCE CODES AND STANDARDS FOR CONTROL AND INSTRUMENTATION

The design, manufacture, inspection, testing & installation of all equipment and system covered under this specification shall conform to the latest editions of codes and standards mentioned below and all other applicable VDE, IEEE, ANSI, ASME, NEC, NEMA, ISA AND Indian Standards and their equivalents.

Temperature Measurements

1. Instrument and apparatus for temperature measurement - ASME PTC 19.3 (1974).

2. Temperature measurement - Thermocouples ANSI MC 96.1 - 1982.

3. Temperature measuremnet by electrical Resistance thermometers - IS:2806.

4. Thermometer - element - Platinum resistance - IS:2848.

Pressure Measurements

1. a) Instruments and apparatus for pressure measurement - ASME PTC 19.2 (1964).

   b) Electonic transmitters BS:6447.

2. Bourdon tube pressure and vacuum gauges - IS:3624 - 1966.

3. Process operated switch devices (Pr. Switch) BS-6134.

Flow Measurements

Instruments and apparatus for flow measurements - ASME PTC 19.5 (1972) Interim supplement, Part-II.

Measurement of fluid flow in closed conduits - BS-1042.

Electronic Measuring Instrument & Control Hardware/ Software

1. Automatic null balancing electrical measuring instruments - ANSI C 39.4 (Rev. 1973): IS:9319.

2. Safety requirements for electrical and electronic measuring and controling instrument - ANSI C 39.5 - 1974.

3. Compatability of analog signals for electronic industrial process instruments - ISA - S 50.1 (1982) ANSI MC 12.1 - 1975.

4. Dynamic response testing of process control instrumentation ISA - S 26 (1968).

5. Surge Withstand Capability (SWC) tests - ANSI C 37.90 a/IEEE-472 or suitable class of IEC-255-4 equivalent to ANSI C37.90a/IEEE-472.

6. Printed circuit boards - IPC TM - 650, IEC 326 C.

7. General requirement and tests for printed wiring boards - IS 7405 (Part-I) 1973.

8. Edge socket connectors - IEC 130-11.

9. Requirements and methods of testing of wire wrap terminations DIN 41611 Part-2.

10. Dimensions of attachment plugs & receptacles - ANSI C 73 - 1973 (Supplement ANSI C 73 a - 1980).

11. Direct acting electrical indicating instrument - IS:1248 - 1968 (R).

12. Standard Digital Interface for Programmable Instrumentation - IEEE-488.2 - 1990.

13. Information Processing Systems - Local Area Networks - Part 2 : Logical Link Control - IEEE-802.2 - 1989.

14. Standard for Local Area Networks : Carrier Sense Multiple Access with Collision Detection - IEEE-802.3 - 1985.

15. Supplements A, B, C and E to Carrier Sense Multiple Access with Collision Detection - IEEE-802.3 - 1988.

16. Standard for Local Area Networks : Token - Passing Bus Access Method - IEEE-802.4 - 1985.

17. Standard for Local Area Networks : Token - Ring Access Method and Physical Layer Specification - IEEE-802.5 - 1985.

18. IEEE Guide to Software Requirements Specifications - IEEE-830 - 1984.

19. Hardware Testing of Digital Process Computers - ISA RP55.1 - 1983.

20. Electromagnetic Susceptibility of Process Control Instrumentation - SAMA PMC 33.1 - 1978.

21. Interface Between the Data Terminal Equipment and Data Circuit - Terminating Equipment Employing Serial Binary Data Interchange - EIA-232-D-1987.

22. Electromagnetic Compatibility for Industrial Process Measurement and Control Equipment, Part 3 : Radiated Electromagnetic Field Requirements - IEC 801-3-1984.

Instrument Switches and Contact

1. Contact rating - AC services NEMA ICS 2 - 1978 (with revision through May 1983), Part - 2-125, A6000.

2. Contact rating - DC services NEMA ICS 2-1978 Part-2 125, N600.

Enclosures

1. Type of Enclosures - NEMA ICS Part - 6 - 1978 (with Rev. 1 4/80) through 110.22 (Type 4 to 13).

2. Racks, panels and associated equipment - EIA : RS - 310 C- 1983 (ANSI C 83.9 - 1972).

3. Protection class for Enclosures, cabinets, control panels & desks - IS:2147 - 1962.

Apparatus, enclosures and installation practices in hazardous area

1. Classification of hazardous area - NFPA 70 - 1984, Article 500.

2. Electrical Instruments in hazardous dust location - ISA - 512.11, 1973.

3. Instrinsically safe apparatus - NFPA 493 1978.

4. Purged and pressurised enclosure for electrical equipment in hazardous location - NFPA 496-1982.

5. Enclosures for Industrial Controls and Systems - NEMA IS 1.1 - 1977.

Sampling System

1. Stainless steel material of tubing and valves for sampling system - ASTMA 296-82, Grade 7 P 316.

2. Submerged helical coil heat exchangers for sample coolers ASTM D11 92-1977.

3. Water and steam in power cycle - ASME PTC 19.11.

4. Standard methods of sampling system - ASTM D 1066-99.

Annunciators

1. Specifications and guides for the use of general purpose annunciators - ISA S 19.1, 1979.

2. Surge withstand capability tests - ANSI C 37.90a - 1989/IEEE-472 or suitable class of IEC 255-4 equivalent to ANSI C37.90a 1989/IEEE-472

3. Damp heat cycling test - IS:2106

4. Specification for Electromagnetic Susceptibility - SAMA DMC 33, 1/78

Protections

1. Relays and relay system associated with electric power apparatus. ANSI C 37.90, 1 - 1989.

2. General requirements & tests for switching devices for control and auxiliary circuits including contactor relays - IS:6875 (Part-I) - 1973.

3. Turbine water damage prevention - ASME TDP-1-1980.

4. Boiler safety interlocks - NFPA Section 85 B - 1984, 85 C - 1991.

UPS System

1. Practices and requirements for semi-conductor power rectifiers - ANSI C 34.2, 1973.

2. Relays and relays system associated with electrical power apparatus - ANSI C 3.90 - 1983.

3. Surge withstand capability test - ANSI C 37.90 1 -1989.

4. Performance testing of UPS - IEC 146.

5. Stationary cells & Batteries Lead Acid type (with tubular positive plates) specification IS-1651-1991.

6. Recommended practice for sizing large lead storage batteries for generating stations & sub-stations - IEEE-485-1985.

7. Printed Circuit Board - IPC TM 650, IEC 326C.

8. General Requirements & tests for printed wiring boards, IS:7405 (Part-I) 1973.

Control Valves

1. Control valve sizing - Compressible & Incompressible fluids - ISA S 75.01-1985.

2. Face to face dimensions of control valves - ANSI B 16.00 - 1973.

3. ISA Hand Book of Control Valves - (ISBN : B: 1047-087664-234-2).

4. Codes for pressure piping - ANSI B 31.1

5. Control Valve leak class - ISA RP 39.6

Process Connection & Piping

1. Codes for pressure piping "power piping" - ANSI B 31.1.

2. Seamless carbon steel pipe ASTM - A - 106.

3. Forged & Rolled Alloy steel pipe flanges, forged fittings and valves and parts - ASTM - A - 182.

4. Material for socket welded fittings - ASTM - A - 105.

5. Seamless ferritic alloy steep pipe - ASTM - A - 335.

6. Pipe fittings of wrought carbon steel and alloy steel - ASTM - A - 234.

7. Composition bronze of ounce metal castings - ASTM - B - 62.

8. Seamless Copper tube, bright annealed - ASTM - B - 168.

9. Seamless copper tube - ASTM - B - 75.

10. Dimension of fittings - ANSI - B - 16.11.

11. Valves flanged and butt welding ends - ANSI - B - 16.34.

Instrument Tubing

1. Seamless carbon steel pipe - ASTM - A 106.

2. Material of socketweld fittings - ASTM - A105.

3. Dimensions of fittings - ANSI - B - 16.11.

4. Code for pressure piping, welding, hydrostatic testing - ANSI B 31.1.

Cables

1. Thermocouples extension wires/cables - ANSI MC 96.1 - 1992.

2. Requirements for copper conductor-Wiring cables for telecommunications & information processing system - VDE:0815.

3. Colour coding of single or multi-pair cables - ICEA - S - 61-402 (third edition) NEMA WCS - 1979 with revisions thorugh 2/83.

4. Insulation & Sheathing compounds for cables : VDE 0207 (Part-4, 5 & 6).

5. Guide design and installation of cable systems in power generating stations (insulation, jacket materials) - IEEE Std. 422-1977.

6. Rules for Testing insulated cables and flexible cables : VVDE - 0472

7. Requirements of vertical flame propagation test - IEEE 383 - 1974 (R 1980)

8. Standard specification for tinned soft or annealed copper wire for electrical purpose - ASTM B-33-81.

9. Oxygen index and temperature index test - ASTM D - 2863.

10. Smoke density measurement test - ASTMD - 2843.

11. Acid gas generation test - IEC - 754 - 1.

12. Swedish Chimney test - SEN - 4241475 (F3).

13. Teflon (FEP) insulation & sheath test - ASTMD - 2116.

14. Thermocouple compensating cables - Testing requirements & sampling plan IS:8784.

15. PVC insulated electric cables for working voltage upto and including 1100 V - IS:1554 (Part-I).

Cable Trays, Conduits

1. Guide for design and installation of cable systems in power generating staiton (Cable trays, support systems, conduits) - IEEE Std. 422, 1977, NEMA VE-1 1979, NFPA 70-1984.

2. -do- Test Standards. NEMA VE-1-1979.

3. Zinc coating "hot dip" on assembled products for galvanising of carbon steel cable trays - ASTMA - 386-78.

Public Address System

1. Specifications for lod speakers - IS:7741 (Part-I, II and III)

2. Code of safety requirement for electric mains operated audio amplifiers - IS:1301

3. Specification for Public Address Amplifiers - IS:10426.

4. Code of practice for outdoor installation of PA system - IS:1982.

5. Code of practice for installation for indoor amplifying and sound distribution system - IS:1881.

6. Basic environmental testing procedures for electronic and electrical items - IS:9000.

7. Characteristics and methods of measurements for sound system equipment - IS:9302

8. Code of practice of electrical wiring installations (System voltage not exceeding 650 volts) - IS:732

9. Rigid steel conduits for electric wiring - IS:9537 (Part-I and II)

10. Fittings for rigid steel conduits for electrical wiring - IS:2667

11. Degree of protection provided by enclosure for low voltage switchgear and control gear - IS:2147.

Vibration Monitoring System

1. API 670 - 1994

2. BS : 4675 Part-2

ANNEXURE - III

एनटीपीसी NTPC	Project : Stage : Package : Supplier : Contractor No. :	LIST OF ITEMS REQUIRING QUALITY PLAN AND SUB-SUPPLIER APPROVAL SUB-SYSTEM :	DOC. NO. : REV. NO. : DATE : PAGE : OF

S.No.	ITEM	QP/ Insp. Cat.	QP No.	QP Sub-Schedule	QP approval schedule	Proposed sub-supplier	Place	Sub-Suppliers approval status/ category	Sub-supplier Details submission schedule	Remarks

LEGENDS :

1. **SYSTEM SUPPLIER / SUB-SUPPLIER APPROVAL STATUS CATEGORY (SHALL BE FILLED BY NTPC)**

A - For these items proposed vendor is acceptable to NTPC. To be indicated with letter "A" in the list alongwith the condition of approval, if any.

DR - For these items "Detailed required" for NTPC review. To be identified with letter "DR" in the list.

NOTED - For these items vendors are approved by Main Supplier and accepted by NTPC without specific vendor approval from NTPC. To be identified with "NOTED".

2. **QP/INSPN CATEGORY :**

CAT-I : For these items the Quality Plans are approved by NTPC and the final acceptance will be on physical inspection witness by NTPC.

CAT-II : For these items the Quality Plans approved by NTPC. However no physical inspection shall be done by NTPC. The final acceptance by NTPC shall be on the basis review of documents as per approved QP.

CAT-III : For these items Main Supplier approves the Quality Plans. The final acceptance by NTPC shall be on the basis certificate of conformance by the main supplier.

UNITS/WORKS : Place of manufacturing Place of Main Supplier of multi units/works.

FORMAT NO. : QS-01-QAI-P-1/F3-R0 1 / 1 Engg.Div./QA&I

ANNEXURE - IV

एनटीपीसी NTPC	Project : Stage : Package : Contractor : Contractor No. :	STATUS OF ITEM REQUIRING QP & SUB-SUPPLIER APPROVAL	DOC. NO. : REV. NO. : DATE : PAGE : OF

S.No.	ITEM/SERVICE	QP/Insp. Cat.	QP Sub. Schedule Approval Schedule	Date of Sub-mission	Date of commt. Appl.	Status Code C/II/I	Proposed Sub-suppliers	Place of manufacturing works	Approval Status	Sub-supplier detail submission schedule	Remarks

FORMAT NO. : QS-01-QAI-P-02/F1-R0 1 / 1 Engg.Div./QA&I

ANNEXURE - V

एनटीपीसी NTPC	Project : Stage : Contractor : Contractor No. : System :	FIELD WELDING SCHEDULE (To be raised by the contractor) Welding Code	DOC. NO. : REV. NO. : DATE : PAGE : OF

Sl. No.	DRG No. for Weld Location and Identification mark	Description of parts to welded	Matl. Spec.	Dimensions		Process of welding	Type of weld	Electrode filler spec.	WPS. No.	Min. pre-heat	Heat treatment		NDT method/ Quantum	RFF		Remarks
											Temp.	Holding time		Spec. No.	ACC Norm Ref.	

NOTES:

SIGNATURE

FORMAT NO.: QS-01-QAI-P-02/F2-R0	1/1	Engg. Div./QA&I

MFGR.s LOGO	Manufacturer's Name & Address	MANUFACTURING QUALITY PLAN		PROJECT :
		ITEM	QP NO. :	PACKAGE :
			REV.NO. :	CONTRACT NO. :
		SUB-SYSTEM	DATE :	MAIN-SUPPLIER :
			PAGE : OF	

SL. NO.	COMPONENT & OPERATIONS	CHARACTERISTICS	CLASS	TYPE OF CHECK	QUANTUM OF CHECK		REFERENCE DOCUMENT	ACCEPTANCE NORMS	FORMAT OF RECORD		AGENCY			REMARKS
					M	C/N					M	C	N	
1	2	3	4	5	6		7	8	9	D*	** 10.			11

MANUFACTURER / SUB-SUPPLIER	MAIN-SUPPLIER
SIGNATURE	

LEGEND : * RECORDS, IDENTIFIED WITH "TICK" ( ) SHALL BE ESSENTIALLY INCLUDED BY SUPPLIER IN QA DOCUMENTATION
** M : MANUFACTURER / SUB-SUPPLIER
C : MAIN SUPPLIER, N : NTPC
P : PERFORM W : WITNESS AND V : VERIFICATION, AS APPROPRIATE
CHP : NTPC SHALL IDENTIFIED IN COLUM "N" AS 'W'

FOR NTPC USE

DOC. NO. :		REV.....CAT.....
REVIEWED BY	APPROVED BY	APPROVAL SEAL

FORMAT - QS-01-QAI-P-09/F1-R1 1/1 ENGINEERING DIV. / QA&I

	Supplier's Name & Address	FIELD QUALITY PLAN		PROJECT :
		ITEM	QP NO. :	PACKAGE :
			REV.NO. :	CONTRACT NO. :
		SUB-SYSTEM	DATE :	MAIN-SUPPLIER :
			PAGE : OF	

SL. NO.	ACTIVITY AND OPERATION	CHARACTERISTICS/INSTRUMENTS	CLASS# OF CHECK	TYPE OF CHECK	QUANTUM OF CHECK	REFERENCE DOCUMENT	ACCEPTANCE NORMS	FORMAT OF RECORD		REMARKS
1	2	3	4	5	6	7	8	9	D*	10.

MANUFACTURER / SUB-SUPPLIER	MAIN-SUPPLIER	LEGEND : * RECORDS, IDENTIFIED WITH "TICK" ( ) SHALL BE ESSENTIALLY INCLUDED BY SUPPLIER IN QA DOCUMENTATION LEGEND TO BE USED : CLASS # : A - CRITICAL, B = MAJOR, C = MINOR; "A' SHALL BE WITNESSED BY NTPC FQA, 'B' SHALL BE WITNESSED BY NTPC ERECTION / CONSTRUCTION DEPTT. AND 'C' SHALL BE WITNESSED BY ERECTION SUPPLIER (A & B CHECK SHALL BE NTPC CHP STAGE)	FOR NTPC USE	DOC. NO. :	REV.....CAT.....	
SIGNATURE				REVIEWED BY	APPROVED BY	APPROVAL SEAL

FORMAT - QS-01-QAI-P-09/F2-R0 1/1 ENGINEERING DIV. / QA&I

CLAUSE NO.	MANDATORY SPARES

1.00.00 **SPARES**

The Bidder shall include in his scope of supply all the necessary Mandatory spares, start up and commissioning spares and recommended spares and indicate these in the relevant schedules of the Bid Form and Price Schedules. The general requirements pertaining to the supply of these spares is given below:-

1.01.00 **MANDATORY SPARES**

(a) The list of mandatory spares considered essential by the Employer is indicated in this chapter. The bidder shall indicate the prices for each and every item (except for items not applicable to the bidders design) in the 'Schedule of mandatory Spares' whether or not he considers it necessary for the Employer to have such spares. If the bidder fails to comply with the above or fails to quote the price of any spare item, the cost of such spares shall be deemed to be included in the contract price. The bidder shall furnish the population per unit of each item in the Bid Forms and Price Schedules. Whenever the quantity is mentioned in "sets" the bidder has to give the item details and prices of each item.

(b) The Employer reserves the right to buy any or all the mandatory spares parts.

(c) The prices of mandatory spares indicated by the Bidder in the Bid Proposal sheets shall be used for bid evaluation purposes.

(d) All mandatory spares shall be delivered at site at least two months before scheduled date of initial operation of the first unit. However, spares shall not be dispatched before dispatch of corresponding main equipments.

(e) Wherever quantity is specified both as a percentage and a value, the Bidder has to supply the higher quantity until and unless specified otherwise.

1.02.00 **RECOMMENDED SPARES**

(a) In addition to the spare parts mentioned above, the contractor shall also provide a list of recommended spares for 3 years of normal operation of the plant and indicate the list and total prices in relevant schedule of the Bid Form and Price Schedules. This list shall take into consideration the mandatory spares specified in Price Schedules and should be independent of the list of the mandatory spares. The Employer reserves the right to buy any or all of the recommended spares. The recommended spares shall be delivered at project site at least two months before the

scheduled date of initial operation of first unit. However, the spares shall not be dispatched before the dispatch of the main equipment.

(b) Price of recommended spars will not be used for evaluation of the bids. The price of these spars will remain valid upto 6 months after placement of Notification of Award for the main equipment. However, the Contractor shall be liable to provide necessary justification for the quoted prices for these spares as desired by the Employer.

1.03.00 **START-UP & COMMISSIONING SPARES**

Start-up and commissioning spares are those spares which may be required during the start-up and commissioning of the equipment/system. All spares used till the plant is handed over to the employer shall come under this category. The Contractor shall provide for an adequate stock of such start up and commissioning spares to be brought by him to the site for the plant erection and commissioning. They must be available at site before the equipments are energized. The unused spares, if any, should be removed from there only after the issue of Taking Over certificate. All start up spares which remain unused at the time shall remain the property of the Contractor.

1.04.00 The Bidder shall include in his scope of supply all the necessary Mandatory spares, start up and commissioning spares and recommended spares and indicate these in the relevant schedules of the Bid Form and Price Schedules. The general requirements pertaining to the supply of these spars is given below.

2.00.00 The Contractor shall indicate the service expectancy period for the spares parts (both mandatory and recommended) under normal operating conditions before replacement is necessary.

3.00.00 All spares supplied under this contract shall be strictly inter changeable with the parts for which they are intended for replacements. The spares shall be treated and packed for long storage under the climatic conditions prevailing at the site e.g. small items shall be packed in sealed transparent plastic with desecrator packs as necessary.

4.00.00 All the spares (both recommended and mandatory) shall be manufactured alongwith the main equipment components as a continuous operation as per same specification and quality plan.

5.00.00 The contractor will provide Employer with cross-sectional drawings, catalogues, assembly drawings and other relevant documents so as to enable the Employer to identify and finalise order for recommended spares.

CLAUSE NO.	MANDATORY SPARES
6.00.00	Each spares part shall be clearly marked or labelled on the outside of the packing with its description. When more than one spares part is packed in a single case, a general description of the content shall be shown on the outside of such case and a detailed list enclosed. All cases, containers and other packages must be suitably marked and numbered for the purposes of identification.
7.00.00	All cases, containers or other packages are to be opened for such examination as may be considered necessary by the Employer.
8.00.00	The contractor will provide the Employer with all the addresses and particulars of his sub suppliers while placing the order on vendors for items/components/equipments covered under the contract and will further ensure with his vendors that the Employer, if so desires, will have the right to place order for spares directly on them on mutually agreed terms based on offers of such vendors.
9.00.00	The Contractor shall warrant that all spares supplied will be new and in accordance with the contract Documents and will be free from defects in design, material and workmanship.
10.00.00	In addition to the recommended spares listed by the contractor, if the employer further identifies certain particular items of spares, the contractor shall submit the prices and delivery quotation for such spares within 30 days of receipt of such request with a validity period of 6 months for consideration by the Employer and placement of order for additional spares if the Employer so desires.
11.00.00	The Contractor shall guarantee the long term availability of spares to the Employer for the full life of the equipment covered under the contract. The Contractor shall guarantee that before going out of production of spares parts of the equipment covered under the Contract, he shall give the Employer atleast 2 years advance notice so that the latter may order his bulk requirement of spares, if he so desires. The same provision will also be applicable to sub-contractors. Further, in case of discontinuance of manufacture of any spares by the Contractor and/or his sub contractors, Contractor will provide the Employers, two years in advance, with full manufacturing drawings, material specifications and technical information including information on alternative equivalent makes required by the Employer for the purpose of manufacture/procurement of such items.
12.00.00	Material Codification The bidder to provide datasheets/ assembly drawings of the manufacturer/ any other relevant document showing Bill of Material(s), Make, Model Number, Part Number etc. through which mandatory spares to be supplied can be uniquely identified. This would facilitate the Employer to assign a unique code to each of the mandatory spare as brought out in GCC. The bidder shall extend all necessary assistance in this regard.

CLAUSE NO.	MANDATORY SPARES
13.00	In case spares indicated in the list are not applicable to the particular design offered by the bidder, the bidder should offer spares applicable to offered design with quantities generally in line with the approach followed in the lists of mandatory spares.
14.00	Interchangeability and Packings: All spares supplied under this contract shall be strictly interchangeable with parts for which they are intended for replacements. These spares should include all mounted accessories like components, boards, add or items, fitting, connectors etc. and be complete in all respects so that the replacement of the main items by these spares does not require any additional item. The vendors must conform the pair to pair compatibility of each electrical spares modules with the modules should be supplied in the original package. All electronic modules should be preset and/or preprogrammed for ready use at site. Alternatively, suitable instruction sheet indicating the details of required PCB jumper position, BCD which is setting, EPROM/PROM listing etc should be packed along with each module. Also a caution mark sign should be put on all such module which needs pre setting/pre programming before putting them in to service. The spare shall be treated and properly packed for long term storage
15.0	Identification: Each spare shall be clearly marked and labeled on the outside of the packing with its description. When more than one spare part is packed in single case, a general description of the contents shall be shown on the outside of such case and a detailed list enclosed. All cases, containers and other packages must be suitably marked and numbered for the purpose of identification.
16.0	
17.0	If the same spare(s) is appearing at two different places, spare has to be considered at only one place, in order to avoid any duplicity.

	2X660 MW KHURJA STPP TECHNICAL SPECIFICATION FOR ELEVATOR SPECIFIC TECHNICAL REQUIREMENT -MECHANICAL	SPECIFICATION No: PE-TS-475-502-A001 SECTION IA REV. 00 APR 2021

FUNCTIONAL/PERFORMANCE / DEMONSTRATION GUARANTEE

TRIAL OPERATION, COMMISSIONING, PERFOMANCE/ DEMONSTRATION GUARANTEE TESTS:

Demonstration / Functional guarantee tests of elevator shall be carried out at site as follows

A. Rated capacity of the elevator.
B. Travel and hoist Speed of the elevator.
C. Accurate positioning of the elevator.
D. Over Load test as per IS:14665 (Latest edition)

QUALITY ASSURANCE PLAN

MANUFACTURING QUALITY PLAN FOR=M/S vendor	PROJECT: 2X660 MW KHURJA STPP PACKAGE: ITEM: ELEVATOR BHEL REF. NO.:	Q.P/FQP. NO & REV: DATE: PAGE: 1of 4 JOB NO:

1	2	3	4	5	6	7	8	9	10				11
Sr. No.	COMPONENT& OPERATION	CHARATERISTICS	CLASS	TYPE OF CHECK	QUANTUM OF CHECK	REFERENCE DOCUMENT	ACCEPTANCE NORMS	FORMATE OF RECORD		AGENCY			REMARKS
									D	VE	M	B	
A. Boughtout Items :													
1	Raw materials, Round Hexagon & Structurals. Type : EN-8/EN-8D to EN-9,B and En-24	A: Chemical Composition	Major	Analysis	Sample	IS/BS : 970	IS/BS : 970	O.S.L/ T.C		V	V	V	
		B: Mechanical Properties	Major	Hardness	Sample	IS/BS : 970	IS/BS : 970	QA REG.		V	V	V	
		C: Dimensional Checks	Major	Measurement	100%	DRG.	DRG.	D.I.R/Q.C.R		V	w	V	
2	Raw material Rounds, En-8, EN-9, EN-24	Crack Detection	Major	Ultrasonic testing	100%	ASTM-388	ASTM -388	QA/FMT/03		V	W	V	
3	Casting : a. C.I. Graded Castings	A: Chemical Composition	Major	Analysis	Sample	IS-vendor DRG	AS PER DRG.	S.T.C	√	V	V	V	
		B: Mechanical Properties	Major	Hardness on traction sheave	Sample	vendor-DRG IS : 210	vendor-DRG IS : 210	S.T.C	√	V	V	V	
		C: Dimensional Checks	Major	Measurement	Sample	vendor-DRG	vendor-DRG	QA/FMT/02		-	W	-	
		D: Blow Holes	Major	Visual	100%	—	-	QA/REG		-	W	-	
4	Suppliers Item :												
	a. Manufactured Items	Dimensional Check	Major	Measurement	100%	vendor/DRG.	vendor/DRG.	D.I.R		-	W	-	
	b. Moldings Rubber Items (ABSORBER)	A: Dimensional Checks	Major	Measurement	100%	vendor-DRG.	vendor/DRG.	QA/FMT/02		-	W	-	
		B: Hardness	Major	Compression Test	Sample	vendor-DRG.	vendor-DRG.	QA/FMT/02		-	W	-	
	c. Springs (Buffer)	A: Dimensional Check	Major	Measurement	100%	vendor-DRG.	vendor-DRG.	QA/FMT/02		-	W	-	
		B: Spring Constant compression.	Major	Compression	Sample	vendor-DRG.	vendor-DRG.	S.T.C	√	V	V	V	
	d. Guide Rail.	A.Chemical Test.	Major	Analysis	Sample	vendor- DRG	vendor -DRG	S. T.C	√	V	V	V	
		B. Dimension check.	Major	Measurement	Sample	vendor-DRG.	vendor-DRG.	QA/FMT/02		V	W	V	
	e. Wire rope	A: Dimensional Check	Major	Measurement of O.D/ Const.	Sample	IS/2365 &	IS/2365 &	QA/FMT/02		-	W	-	
		B: Mechanical Properties.	Major	Measurement	Correlate S.T.C	IS : 2266	IS : 2266	S.T.C	√	V	V	V	

*V= Verification as appropriat. *M= Manufacturer/Sub contractor.
*W=Witness , *VE= Manufacturer/ sub contractor Vendor.
*S.T.C= Supplier Test Certificate, *B =BHEL/Nominated inspection agency.
*O.S.L = Out Side Lab, *D.I.R=Daily inspection register.
*R.Q.C = Rvendoript Quality Control (vendor) . *P =Perform.
*Q.C.R = Qua;ity Control Register (vendor) . *T.C. = Test Certificate,
*D.I.R = Daily inspection register. * D = Documents.
*U.E.R. =Ultra Sonic Examinitation Record .

MANUFACTURER SEAL AND SIGN	CONTRACTOR SIGN AND SEAL .	NAME & SIGN OF APPROVING AUTHORITY & SEAL

1	2	3	4	5	6	7	8	9	10				11
Sr. No.	COMPONENT& OPERATION	CHARATERISTICS	CLASS	TYPE OF CHECK	QUANTUM OF CHECK	REFERENCE DOCUMENT	ACCEPTANCE NORMS	FORMATE OF RECORD		AGENCY			RMARKS
									D	VE	M	B	
	f. Power & control (PVC)cable	a- FRLS ,	Major	Electrical	Sampling	IS - 694	IS - 694	S.T.C	√	V	V	V	
		b- Insulation resistance.	do	do	do	do	do	do	√	V	V	V	
5	Raw material for motor. (1) Enameled wire.	a) Dimension Check	Major	Measurement	Sample	vendor -STD	vendor -STD	D.I.R		V	W	V	
		b) High voltage test	Major	Elect.	One Sample each roll	IS:4800	IS:4800	D.I.R		V	W	V	
	(2) Copper base (Flat)	Chemical check	Major	Analysis	Sample	Cu=min 99.5%	Cu=min 99.5%	O.S.L / T.C		V	V	V	
6	Finished Manufactured Components	Plating thickness control	Major	Measurement	Sample	vendor-STD.	vendor-STD.	vendor-STD		V	W	V	
B. Inspection During mfg.													
1	Machine Shop :	A: Dimensional Check	Major	Measurement	100%	vendor-DRG.	vendor-DRG.	QA/FMT/01		-	W	-	
		B: Crack detection Motor bodies	Major	D.P. Test	100%	vendor-STD.	vendor-STD.	-		-	W	-	
		C: Surface check	Major	Visual	100%	vendor-STD.	vendor-STD.	-		-	W	-	
2	Fabrication Shop :	Dimensional Checks of critical items	Major	Measurement	100%	vendor-DRG.	vendor-DRG.	Q.C.R		-	W	-	
		Welding	minor	Visual	Sampling	do	do	.		.	W	.	Welding by approved welder
C. Assembly Inspection.		A- Back lash of gears& Maching contact.	Major	Measurement	100%	vendor INSP NORMS	vendor INSP NORMS	QA/FMT/11		V	W	-	
1	Winding gear.	B- Vibration .	Major	Measurement	100%	vendor INSP NORMS	vendor INSP NORMS	do		V	W	-	
		C- Noise level.	Major	Measurement	100%	vendor INSP NORMS	vendor INSP NORMS	do		V	W	-	
		D- Visual .	Oil leckage	Visual	100%	vendor INSP NORMS	vendor INSP NORMS	do		V	W	-	

***V= Verification as appropriat. *M= Manufacturer/Sub contractor.**
***W=Witness , *VE= Manufacturer/ sub contractor Vendor.**
***S.T.C= Supplier Test Certificate, *B =BHEL/Nominated inspection agency.**
***O.S.L = Out Side Lab, *D.I.R=Daily inspection register.**
***R.Q.C = Rvendoript Quality Control (vendor) . *P =Perform.**
***Q.C.R = Qua;ity Control Register (vendor) . *T.C. = Test Certificate,**
***D.I.R = Daily inspection register. *D = Documents.**
***U.E.R. =Ultra Sonic Examinitation Record .**

MANUFACTURER SEAL AND SIGN

CONTRACTOR SIGN AND SEAL .

NAME & SIGN OF APPROVING AUTHORITY & SEAL /HPGCIL

1	2	3	4	5	6	7	8	9	10				11
Sr. No.	COMPONENT& OPERATION	CHARATERISTICS	CLASS	TYPE OF CHECK	QUANTUM OF CHECK	REFERENCE DOCUMENT	ACCEPTANCE NORMS	FORMATE OF RECORD		AGENCY			REMARKS
									D	VE	M	B	
2	Motor Assembly :	A-Winding Insulation test.	Major	High Volt. Test	100%	I S :325-96 1.5 KV for 5 SEC	I S :325-96 1.5 KV for 5 SEC.	D.I.R QA/FMT/13		V	W	V	
		B-Insulation Resistance	Major	Measurement	100%	> 10 mega ohms	> 10 mega ohms	Test report		V	W	V	
		C-Motor testing for elect. Pmt.	Major	Elect.	100%	IS : 325	IS : 325	Test report		V	W	V	
		D-Vibration measurement & noise lev	Major	Measurement	100%	vendor - Norms	vendor -Norms	Test report		V	W	.	
3	Speed Governor Assembly :	Tripping speed Easy Run test	Major	Function Check	100%	I S : 9878 LCH -112	I S : 9878 LCH - 112	T.C IN Pant.		V	W	V	
4	Controller Assembly / VVVF Unit.	1. Visual Inspection	Major	Visual	100%	vendor Norms	vendor Norms	T.C		V	W	V	
		2. Electrical Checks (Routine Test).	do	Electrical	100%	do	do	do		V	W	V	
		3. Functional Checks	do	Function	100%	do	do	do		V	W	V	
		4. Pretreatment in seven tank for sheet & paint thickness.	Major	Measurement + Visual	Sampling	do	do	vendor - FMT.		V	W	V	

***V= Verification as appropriat. *M= Manufacturer/Sub contractor.**
***W=Witness , *VE= Manufacturer/ sub contractor Vendor.**
***S.T.C= Supplier Test Certificate, *B =BHEL/Nominated inspection agency.**
***O.S.L = Out Side Lab, *D.I.R=Daily inspection register.**
***R.Q.C = Rvendoript Quality Control (vendor) . *P =Perform.**
***Q.C.R = Qua;ity Control Register (vendor) . *T.C. = Test Certificate,**
***D.I.R = Daily inspection register. *D = Documents.**
***U.E.R. =Ultra Sonic Examinitation Record .**

MANUFACTURER SEAL AND SIGN

CONTRACTOR SIGN AND SEAL.

NAME & SIGN OF APPROVING AUTHIRITY & SEAL.

1	2	3	4	5	6	7	8	9	10				11
Sr. No.	COMPONENT& OPERATION	CHARATERISTICS	CLASS	TYPE OF CHECK	QUANTUM OF CHECK	REFERENCE DOCUMENT	ACCEPTANCE NORMS	FORMATE OF RECORD		AGENCY			REMARKS
									D	VE	M	B	
5	Mechanical assembly :	Cage assembly .	Major	Measurement	100%	Appd. L/o DRG. vendor-INSP. Norms	Appd. L/o DRG. vendor-INSP. Norms	QA/FMT/15		V	W	V	
6	Painting	Parts & Components	Major Major	Cross Hatch Test Powder Coating Thickness Test	Sampling Sampling	vendor-INSP. Norms vendor-INSP. Norms	vendor-INSP. Norms vendor-INSP. Norms	QA / REG. QA / REG.		V V	W W	V V	
6	Electrical Assembly	1- Break assembly .	Minor	Function check	Sampling	vendor- NORMS	vendor - NORMS	TC		V	W	V	

***V= Verification as appropriat. *M= Manufacturer/Sub contractor.**
***W=Witness , *VE= Manufacturer/ sub contractor Vendor.**
***S.T.C= Supplier Test Certificate, *B =BHEL/Nominated inspection agency.**
***O.S.L = Out Side Lab, *D.I.R=Daily inspection register.**
***R.Q.C = Rvendoript Quality Control (vendor) . *P =Perform.**
***Q.C.R = Qua;ity Control Register (vendor) . *T.C. = Test Certificate,**
***D.I.R = Daily inspection register. *D = Documents.**
***U.E.R. =Ultra Sonic Examinitation Record .**

MANUFACTURER SEAL AND SIGN

CONTRACTOR SIGN AND SEAL.

NAME & SIGN OF APPROVING AUTHORITY & SEAL

CLAUSE NO.

QUALITY ASSURANCE

ELECTRICAL PORTION OF PASSENGER / SERVICE ELEVATORS AND LIFTS

Items Description	General physical Inspection / Dimensions	Functional/ Operational Test	Burn in Test on on electronic cards	Pre-treatment in seven tank for sheet steel , Painting	Pain shade, thickness & adhesion	All Routine tests as per relevant standard
Electrical Motor IS 325 / IS 4722	Y	Y				Y
PLC (IEC 1131)	Y	Y	Y			Y
VVVF Panel	Y	Y	Y	Y	Y	Y

Note :

1) This is an indicative list of tests/checks. The manufacture is to furnish a detailed Quality Plan indicating the practices & Procedure followed alongwith relevant supporting documents during QP finalisation.

2) Make of all major Bought Out Items will be subject to NTPC approval.

	2X660 MW KHURJA STPP TECHNICAL SPECIFICATION FOR ELEVATOR SPECIFIC TECHNICAL REQUIREMENT -MECHANICAL	SPECIFICATION No: PE-TS-475-502-A001 SECTION IA REV. 00 APR 2021

PAINTING SPECIFICATION

CLAUSE NO.	TECHNICAL REQUIREMENTS
1.00.00	**Specification of surface preparation & painting**
1.01.00	Surface preparation methods and paint/primer materials shall be of the type specified herein. If the contractor desires to use any paint/primer materials other than that specified, specific approval shall be obtained by the contractor in writing from the employer for using the substitute material.
1.02.00	All paints shall be delivered to job site in manufacturers sealed containers. Each container shall be labeled by the manufacturer with the manufacturer's name, type of paint, batch number and colour.
1.03.00	Unless specified otherwise, paint shall not be applied to surfaces of insulation, surfaces of stainless steel/nickel/ copper/brass/ monel/ aluminum/ hastelloy/lead/ galvanized steel items, valve stem, pump rods, shafts, gauges, bearing and contact surfaces, lined or clad surfaces.
1.04.00	All pipelines shall be Colour coded for identification as per the NTPC Colour-coding scheme, which will be furnished to the contractor during detailed engineering.
1.05.0	**SURFACE PREPARATION**
1.05.01	All surfaces to be painted shall be thoroughly cleaned of oil, grease and other foreign matter. Surfaces shall be free of moisture and contamination from chemicals and solvents.
1.05.02	The following surface schemes are envisaged here. Depending upon requirement any one or a combination of these schemes may be used for surface preparation before application of primer. SP1 Solvent cleaning SP2 Application of rust converter (Ruskil or equivalent grade) SP3 Power tool cleaning SP4 Shot blasting (shot blasting shall be used as surface preparation method for hot worked pipes prior to application of primer) SP4* Shot blast cleaning/ abrasive blast cleaning to SA21/2 (near white metal) 35-50 microns SP5 Phospating SP6 Emery sheet cleaning/Manual wire brush cleaning.
1.06.00	**APPLICATION OF PRIMER/PAINT**
1.06.01	The paint/primer manufacturer's instructions covering thinning, mixing, method of application, handling and drying time shall be strictly followed and considered as part of this specification. The Dry film thickness (DFT) of primer/paint shall be as specified herein.
1.06.02	Surfaces prepared as per the surface preparation scheme indicated herein shall be applied with primer paint within 6 hours after preparation of surfaces.
1.06.03	Where primer coat has been applied in the shop, the primer coat shall be carefully examined, cleaned and spot primed with one coat of the primer before applying intermediate and finish coats. When the primer coat has not been applied in the shop, primer coat shall be applied by brushing, rolling or spraying on the same day as the surface is prepared. Primer coat shall be applied prior to intermediate and finish coats.
1.06.04	Steel surfaces that will be concealed by building walls shall be primed and finish painted before the floor is erected. Tops of structural steel members that will be covered by grating shall be primed and finish painted before the grating is permanently secured.

CLAUSE NO.	TECHNICAL REQUIREMENTS
1.06.05	Following are the Primer/painting schemes envisaged herein: PS3 - Zinc Chrome Primer (Alkyd base) by brush/Spray to IS104. PS3* - Zinc Chrome primer (Alkyd base) by dip coat. PS4 - Synthetic Enamel (long oil alkyd) to IS2932. PS5 - Red Oxide Zinc Phosphate primer (Alkyd base) to IS 12744 PS9 - Aluminium paint to IS 2339. PS9* - Heat resistant Aluminum paint to IS-13183 Gr.-I (for temperature 400 degC – 600 degC), IS-13183 Gr.-II (for temperature 200 degC- 400 degC and IS-13183 Gr.-III (for temperature upto 200 degC) PS13 - Rust preventive fluid by spray, dip or brush. PS14 - Weldable primer-Deoxaluminate or equivalent. PS16 - High Build Epoxy CDC mastic `15'. PS17 - Aliphatic Acrylic Polyurethane CDE134 ,%V=40.0(min.) PS18 - Epoxy based TiO2 pigmented coat PS19 - Epoxy based Zinc phosphate primer (92% zinc in dry film (min.), %VS=35.0(min.). PS-20 - Epoxy based finish paint
1.06.06	All weld edge preparation for site welding shall be applied with one coat of wieldable primer.
1.06.07	For internal protection of pipes/tubes, VCI pellets shall be used at both ends after sponge testing and ends capped. VCI pellets shall not be used for SS components and composite assemblies.

1.06.08 Primer/Painting Schedule

Sl. No	Description		Surface Preparation	Primer Coat			Intermediate Coat			Finish Coats			Total Min. Painting DFT (Microns)	Colour Shade
				Type of Primer	No. of Coats	Min. DFT / coat (Microns)	Type of coating	No. Coats	Min. DFT/ Coat (Microns)	Type of coating	No. Coats	Min. DFT/ Coat (Microns)		
A) Power Cycle Piping														As per NTPC Colour shade/ coding scheme
1.	All insulated Pipings, fittings/ components, Pipe clamps, Vessels/Tanks, Equipments etc.		SP3/SP4	PS 9*	1	20	-	-	-	PS9*	1	20	40	
2.	All un -insulated Pipings, fittings/ components, Pipe clamps, Vessels/Tanks, Equipments etc.	Design temperature < or equal to 60^{0}C	SP3/SP4	PS 5	2	25	-	-	-	PS 4	3 $	35 $	155 $	
		Design temperature above 60 ^{0}C-200^{0}C	SP3/SP4	PS 9*	1	20	-	-	-	PS9*	1	20	40	
		Design temperature > 200^{0}C	SP3/SP4	PS9*	1	20	-	-	-	PS9*	1	20	40	
3	Constant Load Hanger (CLH), Variable Load Hanger (VLH).		SP4*	PS19	1	40	-	-	-	PS17	1	30	70	
4.	Piping hangers/ supports (other than (3) above. (un-insulated)		SP3/SP5	PS 5	2	25	-	-	-	PS4	2	25	100	
5.	Valves													

	Cast/Forged	Design temperature < or equal to 60 degC #	SP3/SP5	PS 5	2	35	-	-	-	PS4	2	25	120	
		Design temperature above 60 degC	SP3/SP5	PS 9*	1	20	-	-	-	PS9*	1	20	40	
6.	All auxiliary Structural Steel components for pipe supports	Outside TG building and in SG envelope	SP4*	Inorganic Ethyl Zinc Silicate	1	75	PS18	1	75	a))Epoxy coat b)Final coat of paint PS17	2 1	35 30	250	
		Within TG building	SP4*	-do-	1	35	PS18	1	35	a))Epoxy coat b)Final coat of paint PS17	2 1	25 30	150	
7.	Weld Edges		SP6 (Hand cleaning by wire brushing)	PS13 (Weldable primer)	1	25	-	-	-	-	-	-	25	

1. $ The first 2 finished coats (total min.DFT of 70 microns) shall be done at shop and the 3rd finish coat (min.DFT 35 Microns) shall be applied at site.
2. For valves below 65NB and temperature upto and including 540 Deg.C, Parkerizing/zinc phosphate corrosion resistant coating as per ASTM F1137 is also acceptable in lieu of Aluminum paint.
3. For corrosion protection of threaded hanger rods and variable spring cages, electro galvanizing in full compliance to minimum Corrosion category C3 as per EN ISO12944 is also acceptable.
4. For spring cages, 2 coats of 30 µm(min) zinc-rich epoxy resin primer with zinc content> 80 weight% in dry film followed by 2 coats of 30 µm(min) top coat of Acrylic resin Co-polymerisate with a total combined minimum DFT of 120µm is also acceptable in lieu of above specified paint scheme.
5. For corrosion protection for all inner parts of the hangers shall be atleast in full compliance to Corrosion category C3 as per EN ISO12944.
6. # - For Cast/forged valves upto & including design temperature 60Deg.C, Aluminium painting as per IS-13183 Gr-3 or better with total DFT 40Micron is also acceptable.

B) LOW PRESSURE PIPING

		Surface Preparation	Type of Primer	No. of Coats	Min. DFT / coat (Microns)	Type of coating	No. Coats	Min. DFT/ Coat (Microns)	Type of coating	No. Coats	Min. DFT/ Coat (Microns)	Min. Total DFT (Microns)	
1	All Piping, fittings / components, valves, Equipments etc.	SP3/SP5	PS3/ PS5	2	25	PS 4	1	30	PS 4	2	35	150	As per NTPC Colour shade/ coding scheme
2	Stainless steel surface, Galvanized steel surface and gun metal surface.	No Painting											
3	On the internal surface for pipes 1000 Nb and above	A coat of primer followed by hot coal-tar enamel or coal tar epoxy painting (cold) shall be applied.											

	2X660 MW KHURJA STPP TECHNICAL SPECIFICATION FOR ELEVATOR SPECIFIC TECHNICAL REQUIREMENT -MECHANICAL	SPECIFICATION No: PE-TS-475-502-A001 SECTION IA REV. 00 APR 2021

ANNEXURE-I

LIST OF MAKES

SR. NO.	ITEM	SUPPLIERS	PLACE	REMARKS
1.	WIRE ROPES	USHA MARTIN	RANCHI	
		BHARAT WIRE ROPE	MUMBAI.	
2.	TRAILING CABLE	GEBAUR & GRILLER- AUSTRIA		
		DAETWYLER (THELMA) CABLES-SWITZERLAND	SWITZERLAND	
		LAPP	GERMANY	
		UNIVERSAL	-	
		INCABSTEP	-	
3.	BUFFER SPRINGS	INDUSTRIAL STEEL SPRING	-	
		ALL INDIA STEEL SPRING MANUFACTURING COMPANY	-	
		KOLKATA SHAW COMPANY	KOLKATA	
		SUPER INDIA SPRINGS	KOLKATA	
		MESCO SPRING.	MUMBAI.	
4.	GEAR INTERNALS	PREMIMUM ENERGY TRANSMISSION LTD,	PUNE	
		SICOR S.P.A-	ITLY	
		OEM		
5.	DRIVER MOTOR	Siemens	MUMBAI	
		ABB	FARIDABAD	
		BHARAT BIJILI	-	
		CGL	-	
		KIRLOSKER ELECTRIC CO LTD	-	
		OEM	-	
		ASEA BROWN BOVERI		
		NGEF		
		MARATHON		
		GE-POWER		
		RAJINDRA ELECT INDUSTRIES		
		LAXMI HYDRAULICS PVT. LTD		
6.	STAINLESS STEEL	SAIL,	-	
		MINOX METAL,	-	
		JINDAL	-	
7.	CR SHEET	ESSAR STEELS,	-	
		BHUSHAN STEELS	-	
8.	CABLES	DELTON,	-	
		NICCO	-	
		UNIVERASL,	-	
		FINOLEX,	-	

	2X660 MW KHURJA STPP TECHNICAL SPECIFICATION FOR ELEVATOR SPECIFIC TECHNICAL REQUIREMENT -MECHANICAL	SPECIFICATION No: PE-TS-475-502-A001 SECTION IA REV. 00 APR 2021

SR. NO.	ITEM	SUPPLIERS	PLACE	REMARKS
		CCI	-	
		MACROTHREM,	-	
		VARSHA CABLES	-	
		KEI.	-	
		PARAMOUNT	-	
		POLYCAB.	-	
9.	RELAYS	SIEMENS	-	
		SCHNEIDER TELEMECHANIQUE	-	
		SALZER,	-	
		SCHNIDER ELECTRIC.	-	
10.	CONTACTORS	SIEMENS	-	
		L&T	-	
		GE	-	
		SCHNEIDER TELEMECHANIQUE.	-	
11.	TRANSFORMERS	SHARP ELECTRONICS	-	
		MELCON CONTROLS	CHENNAI	
		LOGITECH	-	
		GUNHAWA ELECTRIC CO LTD.	-	
12.	INVERTOR (V3F)	YASKAWA-	GERMANY	
		TOSHIBA	JAPAN.	
13.	T GUIDES	SAVERA	CHINA	
		D.D HITECH	-	
14.	CAR DOOR OPERATOR	Wittur GMBH	AUSTRIA	
		FERMATOR	-	
		OEM	-	
15.	INFRA-RED DOOR CURTAIN	MEMCO	UK	
		WECO	-	
		TLJONES	-	
16.	BATTERY (LEAD ACID)	EXIDE.		
		HBL POWER SYSTEM-	HYDERABAD	
		AMAR RAJA	TIRUPATI	
		AMCO SAFT INDIA LTD	BANGALORE.	

NOTE:

1. THE SUB VENDOR LIST ABOVE IS INDICATIVE ONLY AND IS SUBJECT TO BHEL AND CUSTOMER APPROVAL DURING DETAILED ENGINEERING STAGE WITHOUT ANY COMMERCIAL & DELIVERY IMPLICATION TO BHEL.

   BIDDER TO PROPOSE SUB VENDOR WITHIN 4 WEEKS OF PLACEMENT OF LOI. THEREAFTER NO REQUEST FOR ADDITIONAL SUB-VENDOR SHALL BE ENTERTAINED.

2. IN CASE OF ASSEMBLED IMPORTED ELEVATOR, MAKES OF BOI SHALL BE SUBJECT TO BHEL/ CUSTOMER APPROVAL DURING DETAIL ENGINEERING STAGE WITHOUT ANY COMMERCIAL IMPLICATION AT CONTRACT STAGE.

3. DEALERS ARE NOT ACCEPTABLE FOR ANY ITEM OF THE PACKAGE. BIDDER SHALL PROCURE ALL ITEMS INCLUDING PLATES, STRUCTURAL ETC. FROM APPROVED SUB VENDOR ONLY.

ANNEXURE-II
MANDATORY SPARES

ANNEXURE-II
List of Mandatory Spares for elevator.

One (1) set of list of Mandatory Spares common for TG building elevator & Service Building elevator shall be provided.

List of Mandatory spares for TG building elevator and Service Building Elevator.

Sl. No.	Description	Quantity (Units)
1	Over current relay	2 Nos. of each type
2	Auxiliary relays	3 Nos. of each type
3	Friction block	2 Nos.
4	Guide roller of each type	20% of total population or 3 Nos. of each type whichever is high
5	Contactors of each type	2 Nos.
6	Control transformer	1 No. of each type
7	Time device	2 Nos. of each type
8	Rectifiers	2 Nos. of each type
9	Resistor	3 Nos. of each type
10	Fuses of each rating	20% of the total population
11	Limit switches of each type	3 Nos.
12	Push button	3 Nos. of each type
13	Contact device (if applicable)	3 Nos. of each type
14	Brake motor	2 Nos. of each type
15	Transmitters	2 Nos. of each type
16	Switches of each type	3 Nos.
17	Receiver	2 Nos. of each type
18	Bearings of each type & size	2 Nos.
19	Roller of each type	3 Nos.
20	Worm gear spares	
20.1	'O' rings	3 Sets
20.2	Sealing ring of each type	3 Sets
21	Spares for brake	
21.1	a) Fan	2 Nos. of each type
21.2	b) Magnetic coil	3 Nos. of each type
21.3	c) Brake disc	2 Sets
21.4	d) Brake pad	2 Sets
22	Bushing (for door front)	2 Sets
23	Pinion	2 Nos. of each type
24	Lift Main drive motor	01 no of each type & rating.
25	Door opening motor	01 no of each type & rating.
26	Landing door complete	01 no.
27	Car door complete	01 no
28	VFD drive	01 no of each type & rating.

Note:

a) Unless stated otherwise, a 'set' means item or sub-items required for each type/ size, range of assembly/ sub- assembly required for complete replacement in one equipment system; it is further intended that the assembly/ sub-assembly which have different orientation (like left hand or right hand, top or bottom), different direction of rotation or mirror image positioning or any other reasons which result in marinating two different sets of spares to be used for

subject assembly/ sub assembly, these shall be considered as different type of assembly/ sub assembly.

b) Wherever quantity has been specified as percentage (%), the quantity of mandatory spares to be provided by the vendor shall be the specified percentage (%) of total population required to meet the specification requirements. In case the quantity of mandatory spares so calculated happens to be in fraction, the same shall be rounded off to next higher whole number.

c) Wherever the quantities have been indicated for each type, size, thickness, material, radius, range etc, these shall cover all the items supplied and installed and the breakup of these shall be furnished by the vendor during detail engineering.

d) In case spares indicated in the list are not applicable to the particular design offered by the bidder, the bidder should offer spares applicable to the offered design with quantities generally in line with the approach followed in the above list.

e) Wherever bidder has indicated an item as not applicable, the same will have to be supplied free of cost, in case it is found applicable during detail engineering.

f) Interchangeability and Packings: All spares supplied under this contract shall be strictly interchangeable with parts for which they are intended for replacements. These spares should include all mounted accessories like components, boards, add or items, fitting, connectors etc. and be complete in all respects so that the replacement of the main items by these spares does not require any additional item. The vendors must conform the pair to pair compatibility of each electrical spares modules with the modules should be supplied in the original package. All electronic modules should be pre set and/or preprogrammed for ready use at site. Alternatively, suitable instruction sheet indicating the details of required PCB jumper position, BCD which is setting, EPROM/PROM listing etc should be packed along with each module. Also a caution mark sign should be put on all such module which needs pre setting /pre-programming before putting them in to service. The spare shall be treated and properly packed for long term storage.

g) Identification: Each spare shall be clearly marked and labeled on the outside of the packing with its description. When more than one spare part is packed in single case, a general description of the contents shall be shown on the outside of such case and a detailed list enclosed. All cases, containers and other packages must be suitably marked and numbered for the purpose of identification.

ANNEXURE-III

LIST OF TOOLS AND TACKLES

ANNEXURE-III

List of Tools & tackles for elevator.

Sl. No.	DESCRIPTION	Qty.	Remarks
1	Spanner of all sizes required for maintenance	1 Set.	
2	Adjustable Spanner	1 No	
3	Allen Key set all sizes required for maintenance	1 Set	
4	Screw driver set	1 No	
5	Cutting plier	1 No	
6	Grease gun	1 No	
7	Nose plier	1 No	
8	Grip plier	1 No	
9	Hook spanner	1 No	
10	Box spanner	1 No	
11	Oil can	1 No	
12	Measurement Taps	1 No	
13	Paint brush 1/4,1/2,3/4 inch	1 No of each	
14	Line tester	1 No	
15	Multimeter	1 No	
16	Soldering iron	1 No	
17	Torch Light	1 No	
18	Knife cutter	1 No	
19	Steel rule	1 No	
20	Wire Striper	1 No	
21	Tube Spanner Combination	1 No	
22	Hammer 1/2 Kg	1 No	
23	Dial rench	1 No	

ANNEXURE-IV

Drawing document submission schedule

S.N0.	Description	Schedule
1	First submission of dwg/ docs as per MDL	Within two (2) weeks from placement of LOI.
2	Every repeat submission	Within one (1) week.
3	Response time by BHEL	Within three (3) weeks after receiving of drawing.

Note:

1.0 The above are the minimum quantity of drawings/documents required. The exact requirement shall be informed to the successful bidder during detail engineering stage for which no commercial implication shall be entertained by BHEL.

2.0 Bidder to note that BHEL reserves the right for drawing/document submission through web based Document Management System. Bidder would be provided access to the DMS for drawing/document approval and adequate training for the same. Detailed methodology would be finalized during the kick-off meeting. Bidder to ensure following at their end.

- Internet explorer version – Minimum Internet Explorer 7.
- Internet speed – 2 mbps (Minimum preferred).
- Pop ups from our external DMS IP (124.124.36.198) should not be blocked.
- Vendor's internal proxy setting should not block DMS application's link (http://124.124.36.198/wrenchwebaccess/login.aspx).

ANNEXURE-V

MDL FOR ELEVATOR

S.N0.	BHEL DOC No	TITLE	PURPOSE
1	PE-V0-475-502-A001	TDS OF TG BUILDING ELEVATOR	A
2	PE-V0-475-502-A021	TDS OF SERVICE BUILDING ELEVATOR	A
3	PE-V0-475-502-A007	GA, M/C ROOM LAYOUT, SCOPE & BOM OF PASSENGER ELEVATOR (TG BUILDING)	A
4	PE-V0-475-502-A008	GA, M/C ROOM LAYOUT, SCOPE & BOM OF PASSENGER ELEVATOR (SERVICE BUILDING)	A
5	PE-V0-475-502-A013	MQP FOR ELEVATOR (Common for TG BUILDING and Service building)	A
6	PE-V0-475-502-A014	O&M MANUAL FOR ELEVATOR (Common for TG BUILDING and Service building)	I
7	PE-V0-475-502-A015	WIRING DIAGRAM & POWER DISTRIBUTION SCHEMATIC (For each Elevator)	I

A= APPROVAL
I= INFORMATION

	2X660 MW KHURJA STPP TECHNICAL SPECIFICATION FOR ELEVATOR SPECIFIC TECHNICAL REQUIREMENT -MECHANICAL	SPECIFICATION No: PE-TS-475-502-A001 SECTION IA REV. 00 APR 2021

ANNEXURE-VI

CHECK LIST FOR OPERATION & MAINTENANCE MANUAL

Project name :
Project number :
Package Name :
PO reference :
Document number :
Revision number :

Sl.no. & Sections	Description	Tick (√)if included in Manual			Remarks
		Yes	No	Not Applicable	
1.	**Cover page**				
1.1	Project Name				
1.2	Customer/consultant Name				
1.3	Name of Package				
1.4	Supplier details with phone, FAX ,email address , Emergency Contact number				
1.5	Name and sign of prepared by , checked by & approved by				
1.6	Revision history with approval Details				
2.0	**Index**				
2.1	showing the sections & related page nos All the pages should be numbered section wise				
3.0	**Description of Plant/System**				
3.1	Description /write up of operating principle of system equipment/ associated sub-systems & accessories/controls system , operating conditions, performance parameters under normal , start up and special cases				
3.2	Equipment list and basic parameter with Tag numbers				
3.3	Data sheets approved by Customer/for information and catalogues provided by original manufacturer				
3.4	Associated other packages and Interface /terminal points				
3.5	P&ID & Process Diagrams				
3.6	GA Layout drawings, As-built drawings , Actual photograph of items/system (Drawings of A2 & bigger sizes are to be attached in the last)				
3.7	Single line/wiring diagrams				
3.8	Control philosophy /control write-ups				
4.0	**Commissioning Activities (if not covered in separate document i.e. erection manual, commissioning manual)**				
4.1	Pre-Commissioning Checks				
4.2	handling of items at site				
4.3	Storage at site				

4.4	Unpacking & Installation procedure				
5.0	**Operation Guidelines for plant personal/user/operator**				
5. 1	Interlock & Protection logic along with the limiting values of protection settings for the equipment along with brief philosophy behind the logic, drawings etc. to be provided.				
5. 2	Start up, normal operation and shut down procedure for equipments along with the associated systems in step by step mode. Valve sequence chart, step list, interlocks etc. with Equipment isolating procedures to be mentioned.				
5. 3	Do's & Don't of the equipments.				
5. 4	Safety precautions to be taken during normal operation. Safety symbols, Emergency instructions on total power failure condition/lubrication failure/any other condition				
5. 5	Parameters to be monitored with normal values and limiting values				
5. 6	Trouble shooting with causes and remedial measures				
5. 7	Routine operational checks, recommended logs & records				
5. 8	Changeover schedule if more than one auxiliary for the same purpose is given				
5. 9	Painting requirement and schedule				
5. 10	Inspection, repair , Testing and calibration procedures				
6.0	**Maintenance guidelines for plant personal**				
6.1	List of Special Tools and Tackles required for Overhaul/Trouble shooting including special testing equipment required for calibration etc.				
6.2	Stepwise dismantling and re-assembly procedure clearly specifying the tools to be used, checks to be made, records to be maintained, clearances etc. to be mentioned. Tolerances for fitment of various components to be given.				
6.3	Preventive Maintenance & Overhauling schedules linked with running hours/calendar period along with checks to be given				
6.4	Long term maintenance schedules especially for structural, foundations etc.				
6.5	Consumable list along with the estimated quantity required during commissioning, normal running and during maintenance like Preventive Maintenances and Overhaul. Storage/handling requirement of consumables/self-life.				
6.6	List of lubricants with their Indian equivalent, Lubrication Schedule, Quantity required for each equipment for complete replacement is to be				

	given				
6.7	List of vendors & Sub-vendors with their latest addresses, service centres, Telephone Nos., Fax Nos., Mobile Nos., e-mail IDs etc.				
6.8	List of mandatory and recommended spare parts list				
6.9	Tentative Lead time required for ordering of spares from the equipment supplier				
6.10	Guarantee and warranty clauses				
7.0	**Statutory and other specific requirements considerations.**				
8.0	**List of reference documents**				
9.0	**Binding as per requirement**				

288648/2021/PS-PEM-MAX

SITE STORAGE AND PRESERVATION GUIDELINES

FOR

MECHNANICAL BOPs

(Doc No: PE-DC-SSG-A001 REV.00)

PROJECT ENGINEERING MANAGEMENT, POWER SECTOR

BHARAT HEAVY ELECTRICALS LIMITED-NOIDA

CONTENT

1 SCOPE OF THE DOCUMENT

2 PURPOSE OF STORAGE & PRESERVATION

3 MEASURES TO BE TAKEN FOR STORAGE AND PRESERVATION

a) GENERAL STORAGE REQUIREMENTS

b) GENERAL PRESERVATION REQUIREMENTS

c) GENERAL INSPECTION REQUIREMENTS

4 TYPE OF STORAGE FOR VARIOUS EQUIPMENT

5. CONCLUSION

6. STACKING ARRANGEMENT FOR PLATES AND STRUCTURAL STEEL

1. SCOPE OF THE DOCUMENT

This guideline is prepared in intent to provide proper site storage and preservation of the Mechanical, Electrical and C & I items / equipment supplied under various bought out packages/items. This storage procedure shall be followed at different power plant sites by concerned agency for storage and preservation from the date of equipment received at site until the same are erected and handed over to the customer.

2. PURPOSE OF STORAGE & PRESERVATION

Many of the items may be required to be kept in stores for long period. It shall therefore be essential that proper methods of storage and preservation be applied so that items do not deteriorate, loose some of their properties and become unusable due to atmospheric conditions and biological elements.

3. MEASURES TO BE TAKEN FOR STORAGE, HANDLING & PRESERVATION

a) GENERAL STORAGE REQUIREMENTS

1. To the extent feasible, materials should be stored near the point of erection. The storage areas should have adequate unloading and handling facilities with adequate passage space for movement of material handling equipment such as cranes, fork lift trucks, etc. The storage of materials shall be properly planned to minimise time loss during retrieval of items required for erection.
2. The outdoor storage areas as well as semi-closed stores shall be provided with adequate drainage facilities to prevent water logging. Adequacy of these facilities shall be checked prior to monsoon.
3. The storage sheds shall be built in conformity with fire safety requirements. The stores shall be provided with adequate lights and fire extinguishers. ‘No smoking’ signs shall be placed at strategic locations. Safety precautions shall be strictly enforced.
4. Adequate lighting facility shall be provided in storage areas and storage sheds and security personnel positioned to ensure enforcement of security measures to prevent theft and loss of materials.
5. Adequate number of competent stores personnel and security staff shall be deployed to efficiently store and maintain the equipment / material.
7. The equipment shall be stored in an orderly manner, preserving their identification slips, tags and instruction booklets, etc., required during erection. The storage of materials shall be equipment-wise. Loose parts shall be stored in sheds on racks,

preserving the identification marks and tags in good condition. The group codes shall be displayed on the racks

6. At no time shall any materials be stored directly on ground. All materials shall be stored minimum 200 mm above the ground preferably on wooden sleepers

b) GENERAL PRESERVATION REQUIREMENTS

1. All special measures to prevent corrosion shall be taken like keeping material in dry condition, avoiding the equipment coming in contact with corrosive fluid like water, acid etc.
2. Materials which carry protective coating shall not be wrapped in paper, cloth, etc., as these are liable to absorb and retain moisture. The material shall be inspected and in case of signs of wear or damages to protective coating, that portion shall be cleaned with approved solution and coated with an approved protective paint. Complete record of all such observations and protective measures taken shall be maintained.
3. Generally equipment supplied at site are properly greased or rust protective oil is applied on machined/ fabricated components. However periodic inspection shall be carried out to ensure that protection offered is intact.
4. While handling the equipment, no dragging on the ground is permitted. Avoid using wire rope for lifting coated components. Use polyester slings (if possible) otherwise protective material (e.g. clothes, wood block etc.) should be used while handling the components with rope / slings
5. For Equipment supplied with finished paint, touch paint shall be done in case any surface paint gets peeled off during handling. Otherwise such surfaces shall necessarily be wrapped with polythene to avoid any corrosion. Further for equipment wherein finish coat is to be applied at site, site to ensure that equipment is received with primer coat applied.
6. It shall be ensured by periodic inspection that plastic inserts are intact in tapped holes, wherever applicable.
7. Pipes shall be blown with air periodically and it shall be ensured that there is no obstruction.
8. Silica gel or approved equivalent moisture absorbing material in small cotton bags shall be placed and tied at various points on the equipment, wherever necessary.
9. Heavy rotating parts in assembled conditions shall be periodically rotated to prevent corrosion/jamming due to prolonged storage.

10. All the electrical equipment such as motors, generators, etc. shall be tested for insulation resistance at least once in three months and a record of such measured insulation values shall be maintained.

11. Following preservatives/preservation methods can be used depending upon type of equipment

    a. Rust preventive fluid (RPF)

    b. Rust protective paints

    c. Tarpaulin covers, in case of outdoor storage

    d. De-oxy aluminate for weld-ments

c) GENERAL INSPECTION REQUIREMENTS

1. Period inspection of materials with specific reference to –

    - Ingress of moisture and corrosion damages.
    - Damage to protective coating.
    - Open ends in pipes, vessels and equipment -
        - In case any open ends are noticed, same shall be capped.

2. Any damages to equipment / materials.

    - In case of any damages, these shall be promptly notified and in all cases, the repairs / rectification shall be carried out.
    - Any items found damaged or not suitable as per project requirements shall be removed from site. If required to store temporarily, they shall be clearly marked and stored separately to prevent any inadvertent use.

4. TYPE OF STORAGE FOR VARIOUS EQUIPMENT

The types of storage are broadly classified under the following heads:

i **Closed storage with dry and dust free atmosphere**. (C)

The closed shed can be constructed by using cold-rolled / tubular components for structure and corrugated asbestos sheets / galvanised iron sheets for roofing. Brick walls / asbestos sheets can be used to cover all the sides. The floor of the shed can be finished with plain cement concrete suitably glazed. The shed shall be provided with proper ventilation and illumination.

ii **Semi-closed storage**. (S)

The semi closed shed can be constructed by using cold-rolled / tubular components for structure and corrugated / asbestos sheets for roofing. The floor shall be brick paved. If required a small portion of sides can be covered to protect components from rainwater splashing onto the components.

iii Open storage (O)

The open yard shall be levelled, well consolidated to achieve raised ground with the provision of feeder roads for crane approach along with access roads running all sides. One part of the open yard shall be stone pitched, levelled and consolidated with raised ground suitable for storing / stacking heavier and critical components with due space to handle them by cranes etc . Adequate number of sleepers, concrete block etc. to be provided to make raised platforms to stack critical materials.

A separate yard to be identified as “scrap yard” slightly away from main open yard to store wooden/steel scraps, which are to be disposed off. This is required to avoid mix up with regular components as well as to avoid fire hazard.

Some of the components, which are having both machined & un-machined surfaces and are bulky, shall be stored in open storage area on a raised ground and suitably covered with water proof / fire retardant tarpaulin.

The equipment listed below shall be stored and inspected as per requirement mentioned in the table below.

Sl. No.	Description of the equipment	Type of Storage	Check for	Remarks
Raw material /mechanical items like pipes, plates, structure sections etc.)				
1.	Steel pipes (lined/unlined)	S	Damage , paint, corrosion, rubber lining peeling	Provide end cap
2.	MS Plates	S	Damage, paint, corrosion	
3.	SS Plates	S	Damage	
4.	Non-metallic pipes	S	Damage, cracks	Provide end cap
5.	Stainless steel pipes	S	Damage ,	Provide end cap
6.	MS sections, beams	S	Damage, paint, corrosion	
7.	Cable trays	S	Damage, condition of preservations	
8.	Insulation sheets	S	Damage	
9.	Insulation	C	Damage, packing	
10.	Hangers Rods	S	Damage, paint, packing	
11.	Tubes	S	Damage, paint , packing	Provide end cap
12.	Hume pipes	O	Damage	
13.	Castings	O	Damage, paint, corrosion	
Fabricated mechanical items (pressure vessels, tanks etc.)				
14.	Pressure vessels (unlined)	O	Damage, paint, corrosion,	Covered nozzles
15.	Atmospheric storage tanks (unlined)	O	Damage, paint, corrosion	Covered nozzles

Sl. No.	Description of the equipment	Type of Storage	Check for	Remarks
16.	Pressure vessels (lined)	S	Damage, paint, corrosion, rubber lining	
17.	Atmospheric storage tanks(lined)	S	Damage, paint, corrosion, rubber lining	
18.	Support structures	O	Damage , paint, corrosion	
19.	Flanges	C	Damage , paint, corrosion	
20.	Fabricated pipes	S	Damage , paint, corrosion	Provide end cap
21.	Vessels internals	C	Damage , paint, corrosion ,packing	
22.	Grills	S	Damage , paint, corrosion	
23.	Angles	S	Damage , paint, corrosion	
24.	Bridge mechanism/clarifier mechanism	O	Damage , paint, corrosion	
25.	Cranes, rails	S	Damage , paint, corrosion	
26.	Stair cases	O	Damage , paint, corrosion	
27.	Ladders/handrails	O	Damage , paint, corrosion	
28.	Fabricated ducts	S	Damage , paint, corrosion	
29.	Isolation Gates	O	Damage , paint, corrosion	
30.	Fabricated boxes/panels	S	Damage , paint, corrosion	
Mechanical components like valves, fittings, cables glands, spares etc.)				
31.	Valves	S	Damage , packing	

Sl. No.	Description of the equipment	Type of Storage	Check for	Remarks
32.	Fittings	S	Damage , packing	Provide end cap
33.	Cable glands	C	Damage , packing	
34.	Tools & tackles	C	Damage , packing	
35.	Nut , bolts, washers,	C	Damage , packing	
36.	Gasket & Packings	C	Damage , packing	
37.	Copper tubes	C	Damage , packing, corrosion	Provide end cap
38.	SS tubing	C	Damage , packing	Provide end cap
Rotating assemblies (pumps, blowers, stirrers, fans, compressors etc.)				
39.	Pumps	S	Damage , packing, corrosion	Shaft rotation
40.	Blowers/Compressors	S	Damage , packing, corrosion	Shaft rotation
41.	Agitators/stirrers/radial launders	C	Damage , packing, corrosion	Shaft rotation
42.	Rollers for chlorine tonner mounting	C	Damage , packing, corrosion	
43.	Centrifuge	S	Damage , packing,	
44.	Gear box	C	Damage , packing, corrosion	
45.	Bearings	C	Damage , packing, corrosion	
46.	Fans	S	Damage , packing, corrosion	
47.	Dosing skids	S	Damage , packing, corrosion	
48.	Pump assemblies	S	Damage , packing, corrosion	
49.	Air washers(INTERNALS)	S	Damage , packing	
50.	Air conditioners (split)	C	Damage , packing	

Sl. No.	Description of the equipment	Type of Storage	Check for	Remarks
51.	Elevators(CONTAINERIZED)	O	Damage , packing, corrosion	
52.	Chillers/VA machines	S	Damage , packing	
53.	Air handling Unit/Package unit	S	Damage , packing	
54.	Chlorinators & Evaporators	C	Damage , packing	
55.	Ejectors	C	Damage , packing	
56.	Electrolyser	C	Damage , packing	
Miscellaneous items like chain pulley blocks, hoists etc.				
57.	Chain pulley blocks	S	Damage, Packing	
58.	Electric hoists	S	Damage, Packing	
59.	Fire extinguishers	C	Damage, expiry date	
60.	Fork Lift Truck	S	Damage, Packing	
61.	Hydraulic Mobile Crane	O	Damage, Packing	
62.	Mobile Pick Up & Carry Crane	O	Damage, Packing	
63.	Motor boats	O	Damage, Packing	
64.	Safety showers	S	Damage, Packing	
65.	Diffusers/dampers	S	Damage, Packing	
Chemicals and consumables (acid, alkali, paints, oils, reagents and special chemicals)				
66.	Hydro Chloric Acid (HCl)	Store in canes/ storage tank in dyke area	Date of production/ leakage/fumes	hazardous chemical
67.	Sulphuric acid (H_2SO_4)	Store in canes/ storage tank in dyke area	Date of production/ leakage/fumes	hazardous chemical

Sl. No.	Description of the equipment	Type of Storage	Check for	Remarks
68.	Sodium hydroxide (NaOH)	Store in canes/ storage tank in dyke area	Date of production/ leakage/ fumes/ breather	hazardous chemical ,breather to be checked for air ingress
69.	Sodium hypo chlorite	To be stored under shed	Date of production/ leakage/ fumes	hazardous chemical ,self-life normally 15-30 days after which strength of chemical decays
70.	Ammonia	S	Date of production/ leakage/ fumes	Store in closed storage tanks, hazardous chemical
71.	CW treatment chemicals	S	Date of production , Self-life	Store in closed canes
72.	RO/UF cleaning chemicals	S	Date of production , Self-life	Store in closed canes
73.	Lime	C	Damage to packing , seepage	Prevent moisture, rain
74.	Alum bricks	C	Damage to packing	Prevent moisture, rain
75.	Poly electrolyte	S		Store in closed storage tanks
76.	Laboratory chemicals(powder)	C	Damage, Packing self-life	
77.	Laboratory chemicals(liquid)	C	Damage, Packing self-life	
78.	Lubrication oils	C	Leakage	
79.	Paints	S	Leakage ,air tightness	
80.	Sand	O	Damage of packing	No hooks
81.	Salt (NaCl)	C	Damage of packing, water ingress	Prevent moisture, rain
82.	Anthracite	S	Damage of packing	
83.	Activated carbon	S	Damage of packing	

Sl. No.	**Description of the equipment**	**Type of Storage**	**Check for**	**Remarks**
84.	Thermal insulation	S	Damage of packing	
85.	Cement	C	Damage of packing	Prevent moisture, rain
86.	Gravels	O	Damage of packing	
87.	ION exchange resins	C	Damage , packing	Refer manufacturer guidelines
88.	RO membranes	C	Damage , packing	Refer manufacturer guidelines
89.	UF membranes	C	Damage , packing	Refer manufacturer guidelines
90.	Cleaning chemicals	C	Damage , packing	Refer manufacturer guidelines
91.	Chemicals for analysers/calibration	C	Damage , packing	Refer manufacturer guidelines
Electrical and C & I items (motors, cables etc.)				
92.	Motors	C	Damage , packing	
93.	Cable drums	O	Damage	
94.	Control Panel /control desk, UPS ,JB	S	Damage, Packing	
95.	Instruments(gauges/analysers)	C	Damage	
Special items		As per Manufacturer's item, like Hydrogen cylinders, Ozonator, Analyser, Chlorine dioxide generators etc.		

5. CONCLUSION

Concerned storage agency at site should make sure that loss in equipment performance and wear & tear are minimised through proper storage and preservation. The above are broad guidelines and cover major equipment / materials. However specific storage practices shall be followed as per manufacturer recommendation. All the necessary measures even in addition to the ones mentioned above, if found necessary, should be taken to achieve the objective.

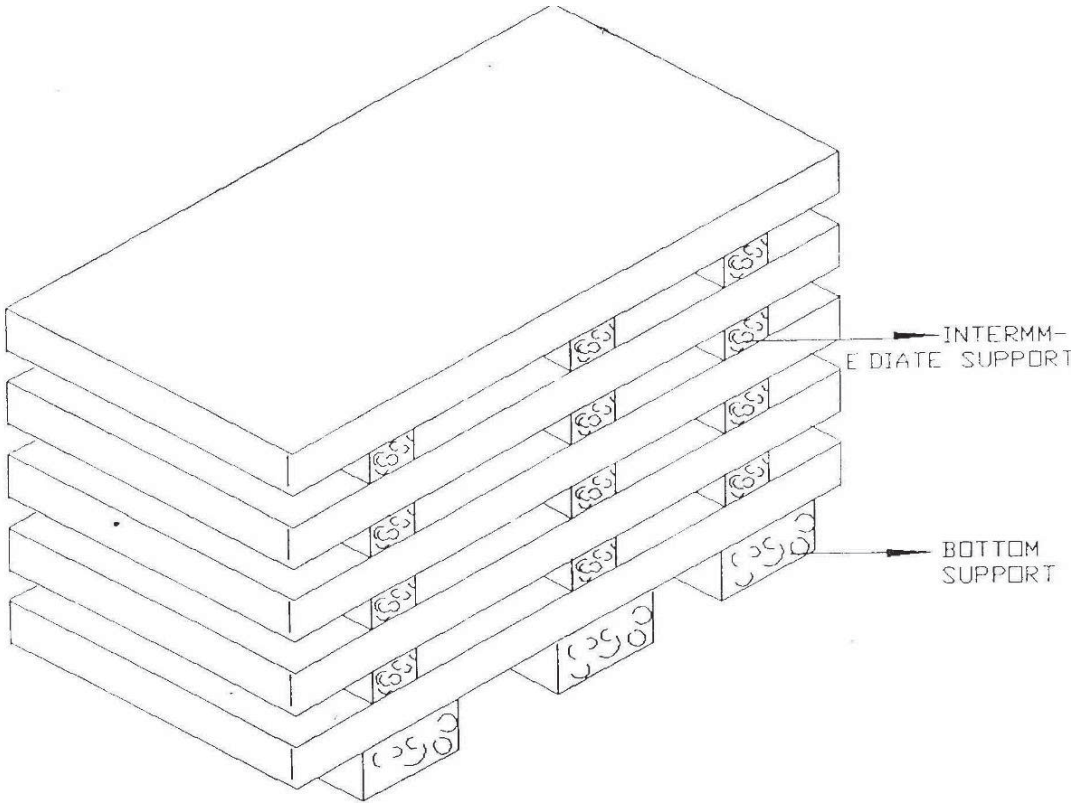

Figure – 1 – PLATE STACKING ARRANGEMENT

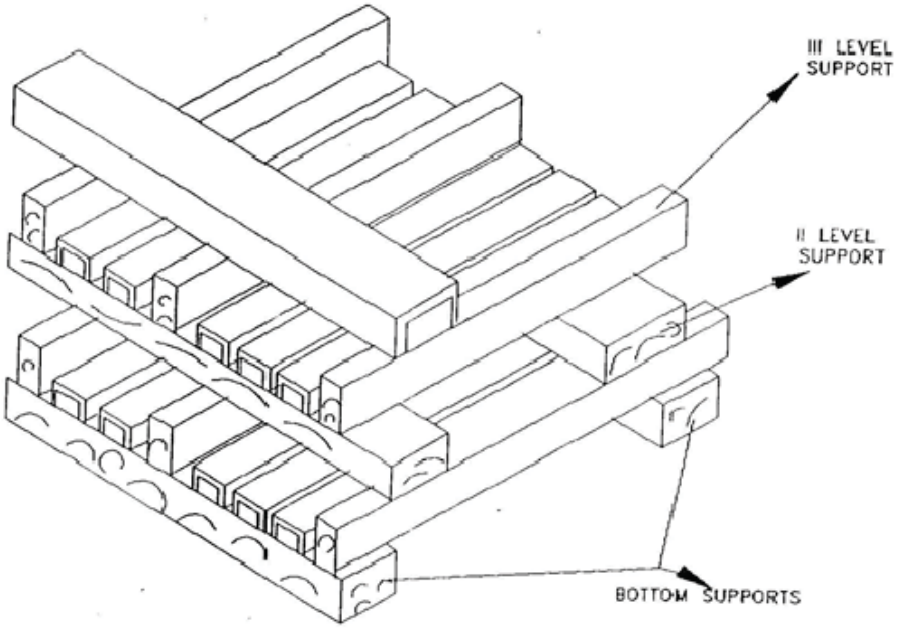

Figure – 2 – STRUCTURAL STEEL STACKING ARRANGEMENT

ANNEXURE VIII – PACKING PROCEDURE

ANNEXURE VIII – PACKING PROCEDURE

COMMON GUIDELINES FOR PACKING

1. GENERAL:

The Components/Assemblies need to be packed suitably to avoid physical damage & corrosion during transit & storage. This packing shall be suitable for different handling operations and for the adverse conditions during transportation and during indoor / outdoor storage of materials.

All the equipment shall be suitably protected, coated, covered or boxed and crated to prevent damage or deterioration during transit, handling and storage at site till the time of erection. The Contractor shall be responsible for all loss or damage during transportation, handling and storage due to improper packing.

The identification marking indicating the name and address of the consignee shall be clearly marked in indelible ink on two opposite sides and top of each of the packages. In addition the Contractor shall include in the marking gross and net weight, outer dimension and cubic measurement.

Each package shall be accompanied by a packing note (in weather proof paper) quoting specifically the name of the Contractor, the number and date of contract and names of the office placing the contract, nomenclature of contents and Bill of Material.

2. TYPES OF PACKING:

The following 5 types of packing have been standardized for packing of General Components/ Assemblies.

1) **'OP'** - Open Type.

2) **'PP'** - Partially Packed.

3) **'CP'** – Crate/Box Packing - Components/Equipment requiring physical protection.

4) **'CQ'** - Case Packing – Machined components-Small & Medium Components/ Assemblies/ Equipment which require corrosion & physical protection.

5) **'CR'** - Case Packing – Electrical/Electronic Components/ Assemblies, which require special packing viz. Water Proof, Shock Proof etc…

3. DESCRIPTION OF TYPES OF PACKING:

The various types of packing, as standardized above, are described below.

3.1 'OP' - Open Type

In case, of components which are not affected by water & dust and do not require special protection, are generally not machined, shall be sent as open packages. However, these components may be sent in crates, wherever necessary.

3.2 'PP' - Partially Packed

Components which need special protection at selected portions only shall be despatched partially packed. Machined surfaces should not be allowed to come directly in contact with the wood. Such surfaces should be protected with 100GSM(Colourless) Multi Layered Cross Laminated Polyethylene
Film. All sharp corners and edges shall be protected by rubber mats to prevent damage to the polyethylene film.

3.3 'CP' - Crate Packing

Assemblies/Components which need only physical protection from the point of view of handling shall be despatched duly packed in crates.

3.4 'CQ' - Case Packing - Machined Components/Assemblies/Equipment

Small and medium sized components/assemblies/equipment due to size/weight and to avoid handling and pilferage problems shall be packed in Case/Containers. Wherever required adequate quantity of silica gel or VCI Powder/Tablets, packed in thin muslin cloth cotton bags shall be suitably placed. Small machines/components of less weight shall be provided with suitable cushioning by Rubberised coir. The components inside the case shall be entirely covered with100GSM(Colourless) Multi Layered Cross Laminated Polyethylene Film, wherever required. This may be prescribed for electronic parts/critical machined components/surfaces.
For mechanical product like valves where motors are separately securely wrapped in polyethylene, the requirement of individual component wrapping shall be exempted.

3.5 'CR' - Case Packing - Electrical & Electronic Components/Assemblies

Delicate components likely to be damaged e.g. Gauges, Instruments etc. are to be wrapped in waxed paper or polyethylene air bubble film and packed in cartons. Adequate quantity of Silica gel packed in cotton bags of 100grams each are to be suitably placed in the cartons. The cartons shall be entirely covered with 100GSM(Colourless) Multi Layered Cross Laminated Polyethylene Film before being packed in the cases. VCI Powder/Tablets can be used as an alternative to Silica Gel.
Empty space in the cartons shall be filled with rubberized coir to get proper cushioning effect. The cartons shall be manufactured from corrugated Fiber Board.

4 PREPARATION OF PACKING CASES

4.1 DIMENSIONS:

a) Thickness of planks for Front, rear, top and bottom sides and binding, jointing battens shall be 25/20mm +2/-3 mm as per applicable drawings of the respective units.

b) Width of all planks including the tongue shall be more than 125mm and after plaining it shall be minimum 100mm.

c) Minimum number of planks shall be used for a shook.

d) Horizontal, vertical, diagonal planks shall be given for binding (number of such planks depend on the dimension of panel.

e) Width of binding planks shall be minimum 100mm.

f) Distance between any 2 binding planks shall be less than 750mm.

g) diagonal planks shall be used in between vertical binding planks when distance between inner to inner of vertical planks is more than 750mm

h) Distance of the outer edges of these planks from the edge of case shall be less than 250mm.

i) Diagonal planks are not required for top planks and width side, if the width of pallet is less than 750mm.

4.2 JOINTING OF PLANKS

Single length planks shall be used for cubicles whose overall length is less than 2400mm. For cubicles of length more than 2400mm, jointing is permitted. The jointing shall be done with one single or maximum of 2 planks of wood same as other planks of width 250 mm (minimum) with two rows of nails on either side of the joint in zigzag manner. From the joint along height side, it shall be of lap joint with overlap of at least the width of plank.

4.3 TONGUE AND GROOVE JOINTS

Two consecutive planks shall be joined by tongue and groove joint. Depth of tongue shall be 12+1 mm, thickness of tongue shall be 8 +1 mm. The groove dimensions shall be such that the tongue fits tightly into the groove to make a good joint. This type of joint can be done based on the product requirement wherever required.

4.4 PERMISSIBLE DEFECTS

Wood shall be free from knots, bows, visible sign of infection and any kind of decay caused by insects, fungus, etc.

End splits: Longest end splits at each end shall be measured and lengths added together. The added length

shall not exceed 60mm per meter run of shook's. Wood pins shall be used to prevent further development of split.

Surface cracks: Surface cracks with a maximum depth of 3mm are permissible. A continuous crack of any depth all along the length is not allowed.

4.5 OTHER MATERIALS

4.5.1 NAILS

The dia. of the nails shall be 3.15mm. The length of the nails shall be 65mm wherever two planks of 25mm thickness are joined and 75mm wherever a 25mm planks is joined to a 50mm plank.

4.5.2 BLUE NAILS

These are used for nailing bituminized Kraft paper/hessian cloth to the planks. The length of the nails shall be 16mm.

4.5.3 HOOP IRON STRIPS

These are used for strapping the boxes. The width of the strips shall be 19+1mm and thickness 0.6+0.01mm. The material shall be free from rust.If sufficient nailing is done for bigger boxes, strapping need not be done.

4.5.4 CLIPS

These shall be used for strapping the hoop iron strips on the boxes.

4.5.5 BRACKETS

These brackets are used for nailing to the corners of cubicle boxes. The brackets shall be of mild steel of thickness min 2mm and width 25+1mm. The brackets shall be of "L" shape, the length of each side being 100+2mm. Two holes shall be provided towards the end of each side for screwing /nailing.

4.5.6 FASTENERS

Bolts, double nuts, spring washers will have to be used for packing of some special items like transformers, reactors, breakers, etc., to hold the job to the bottom plank of the box. The bolts, nuts, washers will be provided by the vendor. Drilling of holes will have to be done using contractor's tools.

4.5.7 MULTI LAYERED CROSS LAMINATED POLYTHELENE FILM

100GSM (Colourless) Multi Layered Cross Laminated Polythelene Film are used to make covers to the jobs individually. The cross lamination gives qualities of extra toughness, together with flexibility and lightness coupled with good weather resistance to ultra violet rays.

4.5.8 RUBBERISED COIR:

The rubberized coir is used as cushioning material. For the packing of loose items, items are to be arrested by using rubberized coir. For the packing of cubicles rubberized coir of thickness 25mm and width 75mm shall be used.

4.5.9 FOAM RUBBER / 'U' FOAM:

This is used for covering the delicate items. This material is provided by the vendor.

4.5.10 MARKING PLATE:

This shall be of anodized aluminium sheet. Size of the marking plate shall be maintained minimum of size as per the details specified in the Figure 4.

4.5.11 PACKING SLIP HOLDER:

This shall be of galvanized iron tinned sheet /Aluminium sheet

4.5.12 SILICA GEL:

Silical gel shall be used for such products only where moisture needs to be avoided.

4.5.13 COTTON BAGS:

These are used for holding silica gel. The bags shall have the following matter indicated on them:

BHEL-UNIT NAME PLACE -PINCODE
SILICA GEL -INDICATING TYPE
BLUE : -ACTIVE
ROSE : -REDUCED ACTIVITY
WHITE : -NO ACTIVITY. TO BE REPLACED WITH FRESH SILICA GEL

4.5.14 COTTON/ PLASTIC TAPE:

This is used for tying small items. And also to prevent vibrations of moving parts within the cubicles.

4.5.15 MARKING INK:

The ink used normally is black in color. In some special cases other color also will have to be used. The ink shall be non-fading/indelible and non-washable by water.

4.5.16 POLYETHYLENE BAGS:

These are to be used for keeping the Packing slips. The bag shall be of size 70mm X 100mm (minimum).

4.5.17 Hessian cloth, twine thread, paint will have to be used in packing certain items.

4.5.18 Mechanical Latching clamps:

For CLW Railway panels and similar Panels self-locking clamps can also be used on need basis in conjunction with or apart from regular bolt and nut fixing arrangement. For reusable boxes, these clamps provide easy locking and unlocking arrangement. These clamps will be made available from BHEL in some cases.

4.5.19 STICKERS

The following stickers to be put by the vendor on cubicles/Boxes after packing.

1) Case No sticker: 2 nos. Size 25.Cm x 0.45Cm
2) BHEL Monogram sticker: 1 no. Size 1.75Cm x 2.3Cm
3) Address sticker: 2 nos. Size 3.8Cm x 3.0Cm
4) Direction sticker “Front” & “Back” - 4 nos. Size 2.0Cm x 0.75Cm
5) Chain Mark Sticker: 4 Nos. Size – 3.0Cm x 0.75Cm
6) "Fragile” sticker: 2 Nos. Size. 2.1Cm x 1.5Cm
7) "DO NOT STACK” sticker - 2 Nos. Size 3.0Cm x 2.2Cm

In place of stickers, writing all the details legibly with paint shall be allowed & respective units may take decision accordingly.

5. PACKING OF CUBICLES:

5.1 The packing is to be done as per clause 4 in all respects.

5.2 The cubicles are already fixed on wooden pallets. Hence the contractor need not arrange the bottom pallets normally.

5.3 The cubicles will be of different sizes both width wise and lengthwise. The cubicles may be made up of single suite, 2 Suite, 3 Suite, 4 Suite, etc., The width of the cubicles generally varies from 400 mm to 1650mm.The length of the cubicle, generally varies from 1500 mm to 4800 mm. The height is normally 2430 mm. In some cases, the height may be less/more.

5.4 MULTI LAYER CROSS LAMINATED POLY FILM

The inner surface of 4 sides of shook's shall be nailed with Multi-layer cross laminated poly film (as per

4.5.7) using blue nails (as per 4.5.2) wherever 2 pieces of Cross laminated poly film are used, the joint shall have an overlap of minimum 20mm.
The inner surface of top cover shall be nailed with Multi-layer cross laminated poly film (as per 4.5.7). This sheet shall project outside on 4 sides by at least 100mm and shall be nailed properly on sides. Joining of sheets should have overlap of minimum 20mm.
The cubicles shall be covered with Multi-layer cross laminated poly film (as per 4.5.7).

5.5 SILICA GEL:
Silica gel (as per 4.5.12) packed in cotton bags shall be kept at different places inside the cubicle as per BHEL-Unit directions. Each suit of cubicle shall be provided with 1 kg of Silica gel (for a 4 suit cubicle 4 kgs of Silica Gel to be used. The bag containing silica gel to be as per 4.5.13).

5.6 LOOSE PARTS:
Any loose parts in the cubicles shall be tied using cotton/ plastic tape. Wooden battens shall be provided wherever necessary.

5.7 WOODEN BATTENS:
In case of cubicle which are not rectangular in shape like control desks, sufficient number of wooden rafters/battens of proper size shall be provided to give strength to the package.

5.8 RUBBERISED COIR:
Gap between the cubicle and the case shall be filled with rubberized coir (as per 5.5.8) with distance between consecutive layers less than 500mm.

5.9 CLAMPING:
Packing shall be bound at edges by nailing M.S. Clamps / Brackets (as per 5.5.5). Each vertical edge shall have minimum 3 clamps. Top horizontal edges will have one clamp for every meter length of package. However, minimum 4 clamps shall be nailed at the top for any cubicle.

5.10 PACKING SLIP:
Packing slip kept in the polyethylene bag (As per 5.5.16) shall be placed in the box at appropriate place. In addition, one more packing slip covered in polyethylene cover and packing slip holder (as per 5.5.11) shall be nailed to front / rear of case.

5.11 MARKING PLATE:
One no. (As per 5.5.10) shall be nailed to the front side of the case.

5.12 CASE MOUNTING:
After complete packing, stencil marking of various details and marking of symbols shall be done as per BHEL instructions using indelible / non washable marking ink.

5.13 Different types (Typical) of Cubicles with sizes for Packing
1. Single suite cubicle - 900 x 950 x2500
2. Two suite cubicle - 1650 x 950 x 2500
3. Three suite cubicle - 2400 x 950 x2500
4. Four suite cubicle - 3150 x 950 x 2500
5. Regulation cub - 1300 x 1350 x 2500
6. Thy cub - 2870 x 1350 x 2500
7. VFD Cub - 3800 x 1550 x 2500

6 PACKING OF LOOSE ITEMS/SPARES
1) Shape of cases shall be square, rectangular with single gabled roof or with double gabled roof depending on the nature of the job to be packed. Construction shall be as per drawings enclosed. Only gable will be

additional as required.

2) Wood with Tongue and Groove joint as per clause 4.3.

3) Width of planks shall be at least 100 mm. Width of binding planks (battens) shall be at least 75mm.

4) External surface of planks on front and rear shall be plane 100% (except bottom plank).

5) Inner surfaces of all 6 sides shall be lined with Multi Layered Cross Laminated Polythelene Film (as per clause 4.5.7) using blue nails.

6) Rubberized coir of minimum 25mm thickness and 100 mm width shall be nailed to inner surfaces of bottom and 4 sides of box.

7) Internal packing: Items that go into the box shall be packed using 100GSM, (Colourless) Multi Layered Cross Laminated Polyethylene Film. Any space left between the job and the sides and the top of the box shall be filled with rubberized coir to get proper cushioning effect.

8) Certain items like transformers, reactors, breakers, etc., shall be bolted to the bottom of the box using bolts, nuts and washers.

9) Silica gel as per clause 4.5.12 held in cotton bags as per clause 4.5.13 shall be kept at proper places in the box.

10) Packing slip kept in polyethylene bag (clause 4.5.16) shall be placed in the box.

11) Marking plate as per clause 4.5.10 shall be nailed to side of the box.

12) Two numbers of hoop iron strips as per clause 4.5.3 shall be strapped tightly on the case using clips.

13) Stencil marking of various details and marking of various symbols shall be done as per BHEL instructions using indelible/non-washable marking ink.

14) Loose items to be kept inside the cubicle

- The components which are removed from cubicle for shipping purpose only, such as meters shall be kept inside the cubicle individually, kept in wooden box and tied firmly in bottom of Cubicle.
- Other items which are given loose in addition to cubicle shall be packed in separate boxes.

7 BOX SIZES

7.1 BOX SIZES

Table 1 – SPARES WOODEN BOX DETAILS

SNO	BOX TYPE	BOX SIZE (in mm)	BOX Wt (in KG)	Carrying Capacity
1	A	800 X 200 X 200	15	
2	B	1500 X 200 X 200	22	
3	C	2000 X 200 X 200	27	
4	D	1100 X 200 X 200	15	
5	E	200 X 200 X 200	5	
6	F	320 X 250 X 260	13	
7	G	320 X 250 X 430	16	
8	H	430 X 370 X 430	23	
9	I	1100 X 400 X 400	45	
10	J	1500 X 500 X 400	65	
11	K	2000 X 500 X 400	93	

12	L	2500 X 500 X 400	88	
13	M	900 X 600 X 600	100	
14	N	3000 X 400 X 400	60	
15	P	600 X 500 X 400	35	
16	Q	710 X 630 X 600	90	
17	R	850 X 630 X 670	102	
18	S	1000 X 770 X 670	140	
19	T	2500 X 850 X 800	180	
20	U	1500 X 700 X 700	120	
21	W	1200X900X600	120	
22	Y	450 X 200 X 200	10	

Table 2 – WOODEN BOX DETAILS

BOX TYPE	BOX SIZE (in MM)	BOX Wt (in KG)	Carrying Capacity
1	320X250X260	10	
2	320X250X430	15	
3	430X370X430	25	
4	670X670X470	65	
5	720X630X600	75	
6	1000X770X660	100	
7	1100X430X670	80	
8	1200X1200X900	80	
9	1300X770X1050	155	
10	2500X850X800	225	
11	2000X1500X1200	305	
12	1850X1050X1250	260	
13	2000X800X800	180	
14	2600X1500X1600	470	
15	250X250X600	20	
16	250X250X880	30	
17	300X300X700	25	
18	380X380X880	45	
19	510X510X1400	60	
20	570X570X1400	80	
21	575X575X1875	105	
22	3600X1100X1100	390	
23	900X500X800	110	
24	2000X950X740	225	

25	1600X1120X700	220	
26	2500X2000X1200	490	
27	2900X1900X1400	525	
28	3000X1000X900	370	
29	3200X2200X950	450	
30	2150X1100X750	325	
31	2000X2000X700	130	
32	700X1200X1325	130	

TABLE 3 STEEL BOXES

S.NO.	TYPE	DIMENSION IN MM			WEIGHT	CARRYING CAPACITY (KGS)
		LENGTH	BREADTH	HEIGHT		
1	I	2480	1680	1500	339	4500
2	II	1200	900	600	61	2000
3	IIB	1800	850	950	115	2500
4	III	900	600	600	29	1000
5	IV	600	450	500	19	750
6	V	400	350	300	11	500

TYPICAL PATTERN OF WOODEN BOX

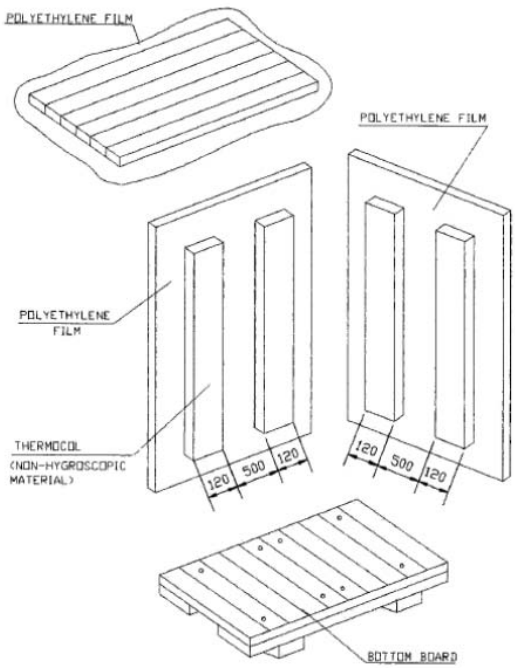

Figure 1

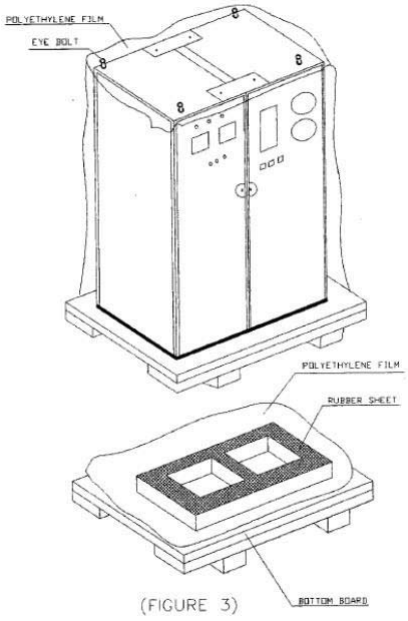

Figure 2

7.3 SEALED PACKING:

Components sub-assemblies and assemblies sensitive to climatic conditions shall be packed seal tight. All the openings of the sensitive components, sub-assemblies and assemblies shall be blanketed to prevent the ingress of dust and moisture. The components sub-assemblies and assemblies are completely covered with 2 layers of polyethylene sheet. All sharp corners and edges are to be protected by rubber mats to prevent the polyethylene sheet from damage. Top surface of the case shall be free from dents to prevent rain water pockets.

8 MARKINGS/STENCILINGS

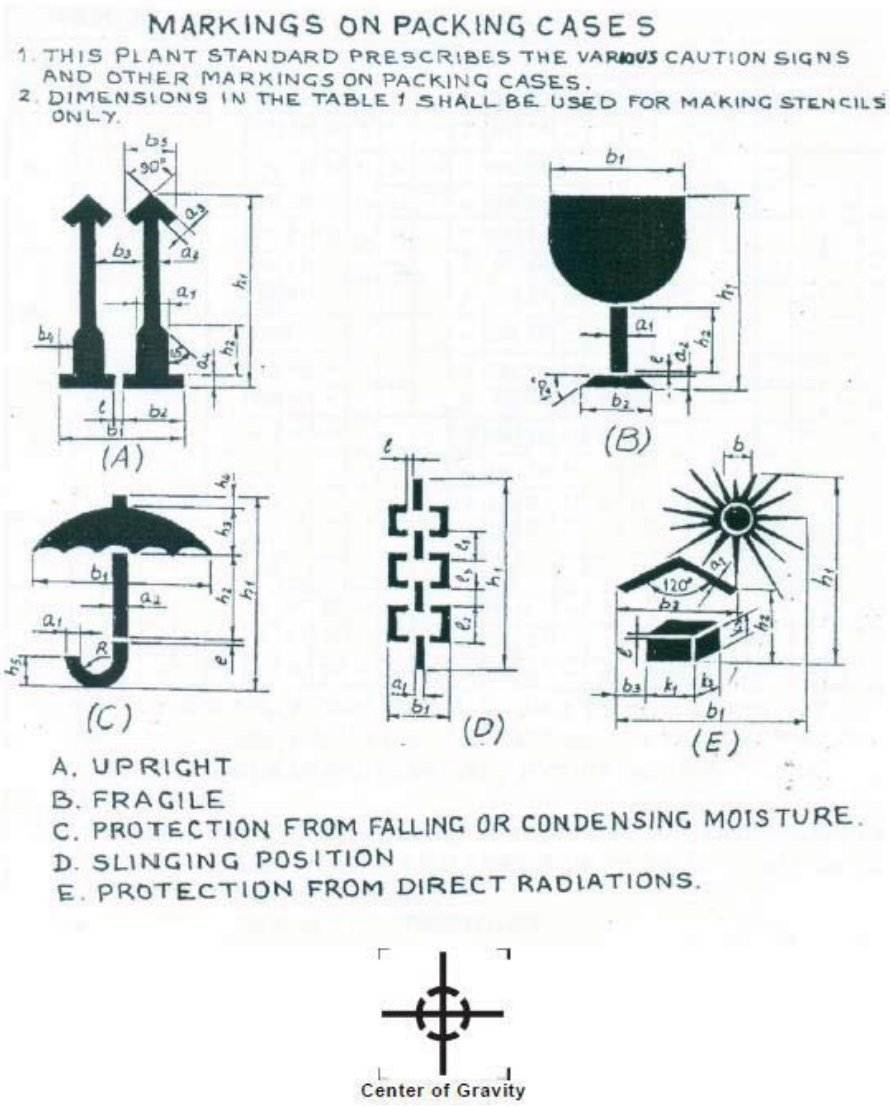

Figure 3

DESIGN-ATION		DIMENSION IN MM																						
		a1	a2	a3	a4	b1	b2	b3	b4	b5	b	l	h1	h2	h3	h4	h5	k1	k2	k3	l1	l2	l3	R
A	1	12	5	5	4	52	25	19	8	21		2	84	23										
	2	17	7	7	6	75	36	29	11	30		3	119	33										
	3	24	10	10	8	104	50	38	16	42		4	168	46										
	4	34	14	14	11	147	71	59	23	60		5	239	65										
B	1	5	5			50	33					2	84	25										
	2	7	7			71	47					3	119	36										
	3	10	10			100	66					4	168	50										
	4	14	14			142	94					5	239	71										
C	1	4	3			66						2	80	39	19	5	11							6
	2	6	4			85						3	114	55	27	7	16							9
	3	8	6			120						4	160	78	38	10	22							12
	4	11	9			170						5	227	110	54	14	31							17
D	1	6				30						4	148								30	30	10	
	2	9				42						5	209								42	42	14	
E	1	3				69	47	10			16	2	91	26				17	8	11				
	2	4				98	67	15			23	3	128	33				24	11	16				
	3	6				138	94	20			32	4	182	62				34	16	22				

Table 4

Black and Red Marking Ink to IS:1234 "Ink, Stencil, Oil Base, For Marking Porous Surfaces" or duplicating ink stencilling, oil base for marking porous surfaces.

All cases containing fragile items are to be stencilled with red marking and stencilling paint/ink **"HANDLE WITH CARE", "FRAGILE DO NOT TURN OVER".**

Besides the caution signs the product information's shall be stencilled of letters with 13mm to 50mm height. In case of consignment consists of more than one package, each package shall carry its package no as given in shipping list. All caution signs shall be stencilled in high quality full glossy out door finishing paint red in colour (AA56126). All other markings shall be carried out in black enamel.

Caution signs & other markings shall be stencilled on both the end shooks & the side shooks.

Caution sign (for slinging) shall be stencilled only on side shooks at the appropriate place.

Note: Incase the size of package is small for using the stencils, then hand written letters/figures shall be allowed.

	BHEL – <unit> - <location> - <pin>				
CONSIGNEE					
MATERIAL					
CUSTOMER REF.				MO. NO.	
DESPATCH ADVICE NOTE NO				CASE NO	
DIMENSIONS(MM) L x B x H				NET WT –KGS	GROSS WT –KGS
SPECIAL INSTRUCTIONS	HANDLE WITH CARE - KEEP DRY DO NOT DROP - DO NOT TILT				

Figure 4 – TYPICAL MARKING PLATE (225 X 170)

Figure 5

Easy spares [Initial and O&M] Traceability and Identification at units and as well as at sites:

9 STANDARD METHOD OF PACKING

Table 5 - Standard Method of Packing

DESCRIPTION	CASE	CRATE	SKID	BUNDLE	BARE	DRUM	METAL DRUM	FIBRE DRUM
PRESSUE VESSELS								
TOWERS					O			
TANKS					O			

	2X660 MW KHURJA STPP	SPECIFICATION No: PE-TS-475-502-A001
	TECHNICAL SPECIFICATION FOR ELEVATOR	SECTION IA
		REV. 00 / APR 2021
	SPECIFIC TECHNICAL REQUIREMENT -MECHANICAL	

VESSELS					O			
GASKETS	O							
FASTENERS	O							
COVERS		O						
EXCHANGERS								
HEAT EXCHANGERS					O			
TUBE BUNDLE	O							
SHELL					O			
AIR FIN COOLERS					O			
COLOUMNS, MOTOR SUSPENSIONS, PLENUM CHAMBERS, SCREEN GUARDS, ETC					O			
BEARING BLOCKS	O							
FANS	O	O						
MOTORS	O							
GASKETS	O							
FASTENERS	O							
TEST FLANGES			O					
TEST RINGS			O					
COVERS			O					
CRYOGENIC VESSELS								
COLD CONVERTERS					O			
HORIZONTAL STORAGE TANKS					O			
TRANSPORTATION TANK					O			
COLD BOX					O			
DRYING UNIT					O			
DRYING BOTTLES					O			
MOISTURE SEPARATORS					O			
SILENCERS					O			
ONGC SKIDS					O			
VAPORISER		O						
SPECIAL PRODUCTS								
SI/VI PIPING		O						
CRO BIO CONTAINERS	O							
DESCRIPTION	**CASE**	**CRATE**	**SKID**	**BUNDLE**	**BARE**	**DRUM**	**METAL DRUM**	**FIBRE DRUM**
AIR BOTTLES	O							
TITANIUM BOTTLE	O							
WAR HEAD CONTAINER	O							
MISSILE CONTAINER	O							
FUEL CONTAINER	O							
AIR LOCK ASSEMBLY	O							
BOILER DRUMS					O			

	2X660 MW KHURJA STPP	SPECIFICATION No: PE-TS-475-502-A001
	TECHNICAL SPECIFICATION FOR ELEVATOR	SECTION IA
		REV. 00 / APR 2021
	SPECIFIC TECHNICAL REQUIREMENT -MECHANICAL	

BOILER ITEMS								
COILS			O					
PANELS					O			
HEADERS			O		O			
FEEDERS								
MACHINED ITEMS								
SHELL SEGMENTS					O			
SHELL SEGMENTS IN STACKS					O			
SPHERE PETALS								
COLOUMNS, BASE PLATES, TIERCOS, PIPES, NOZZLE E1, F1, INTERNAL PIPES, PADS ETC.					O			
ROLLERS	O							
VALVE TRAYS								
VALVE TRAY COMPONENTS	O							
LATTICE GIRDERS		O						
FASTENERS	O							
GASKETS	O							
SUB CONTRACTS								
FAB STRUCTURALS					O			
SUPPORTING STRUCTURALS					O			
STRUCTURE SUB ASSEMBLY					O			
FAB PIPES					O			
GRATINGS					O			
STAIR CASES					O			
HANDRAILS/ PLATFORMS					O			
BOUGHT OUT COMPONENTS								
IRON & STEEL (LIKE PLATES, BEAMS, ANGLES, CHANNELS ETC.)					O			
PIPE FITTINGS								
CS PIPES, TUBES					O			
SS PIPES, TUBES					O			
FIN TUBES	O							
ELBOWS		O			O			
DESCRIPTION	**CASE**	**CRATE**	**SKID**	**BUNDLE**	**BARE**	**DRUM**	**METAL DRUM**	**FIBRE DRUM**
FLANGES	O	O						
VALVES	O							
GAUGES	O							
DEMISTERS		O						
ABSCRBANTS (LIKE MOLECULAR SIEVES, ACTIVATED ALUMINA, MOBILE SORBID)						O		
PAINT TINS		O						

PAINT DRUMS						O		
IGNITORS	O							
SPRAY NOZZLES	O							
ELECTRICAL INSTRUMENTATION								
MOTORS, PUMPS, COMPRESSORS, TURBINES	O							
SWITCH BOARDS, DISTRIBUTION BOARDS, STARTERS, JUNCTION BOXES		O						
INDICATORS, VIBRATOR SWITCHES	O							
CABLE BUNDLES, CABLE DRUMS					O			
CABLE TRAYS, CABLE RACKS, EARTHING MATERIAL		O						
OPERATIONAL SPARES	O							

10 PROCEDURE FOR HANDLING OF COMPONENTS

The purpose of this procedure is to protect the quality of the components/equipment while handling in various stages of manufacturing packing & despatching.

10.1 Adequate care shall be taken in handling the material, and components to avoid damage during receipts, storage issue manufacture & despatch operations.

10.2 Appropriate material handling equipment like fork lifters, cranes etc. shall be used where needed.

10.3 Lifting by crane and transportation by trolley of critical items and large components like rotors castings etc. shall be done carefully.

10.4 For critical items, where specified, special handling fixtures shall be used for lifting.

10.5 Slings and shackles used for lifting the components/equipment shall be checked for fitness and suitability before use.

10.6 Slings used on machined surfaces shall be suitably padded. No slings shall be used on journal surfaces.

10.7 Precision machined components like blades, catches, rollers etc. shall be lifted using suitable wooden pallets.

10.8 HANDLING OF COMPONENTS ON RECEIPT/DESPATCH

Before loading/unloading a packing case from the carrier look for the following shipping instructions painted on the packing case.

a) The markings showing the upright position.

b) The markings showing the sling position

c) Markings showing the fragile contents.

d) Other required markings as per clause no.10

10.8.1 Appropriate cranes and slings should be used for different components/ cases. Slings should normally make an angle as minimum as possible (width wise) but in no case more than 15º.

10.8.2 Handling and lifting should be done without jerks or impacts.

10.8.3 Immediately after receipt of the goods, the packing should be examined all-round for any sign of damage. If necessary, lift the cover or a number of boards of the case so as to make the contents visible. In the event of sealed packing being used the plastic sheeting should not be damaged. It is imperative that the packing material is restored in original condition after the inspection.

10.8.4 On receipt of the equipment it should be checked with the shipping list and missing or damage if any should be reported immediately. It is important to arrange for immediate examination to determine the extent of the damage, the cause of the damage and where applicable the person or persons responsible for the damage. According to general practice when transporting by railway or by road vehicle the carrier concerned should be immediately called upon (within specified periods) for jointly establishing a statement of the damage. This is essential as a basis for a subsequent claim and possible damage report to the insurance company.

10.8.5 Protective coating applied on machined surfaces should not be disturbed. The plastic covering should be put back carefully so that it prevents ingress of dust and moisture. Some packing may have vapour phase inhibitor (VPI) paper enclosed inside the packing cases. This should be restored to its original place as far as possible.

10.8.6 Silica gel and such other chemicals kept in the box as desiccants and indicators should also be left in the box itself.

11 GENERAL GUIDELINES FOR ODC TRANSPORTATION/DESPATCH

Based on the Dimensions/Weight indicated in the Transportation Sketch, the type of Trailer is decided and indicated in the Tender Enquiry.

11.1 TRANSPORTATION:

1. LOW BED TRAILERS (LB 8):

   Well Bed Length : 10000mm
   Over Gooseneck : 13000mm
   Width : 3000mm
   Carrying Capacity : 40MT

2. LOW BED TRAILERS (LB 16):

   Well Bed Length : 12000mm
   Over Gooseneck : 16000mm
   Width : 3000mm
   Carrying Capacity : 75MT

3. TOW TYPE TRAILERS (WITH FRONT DOLLEY 16 TYRES): 12000MM length
   (for Exceptional equipment length: 30000mm and above)

Bigger Dia equipment are loaded in the Well with overhanging.

Smaller Dia equipment with excess length are loaded over Gooseneck with rear hanging.
The Vehicle Dimensions are defined above are only guidelines for selection based on actual Dimensions/ Weight of the Consignment

11.2 PACKING:

For all ODCs, Wooden Saddles are cut to the diameter of equipment as per the Transportation Sketch.

Wooden Saddles	For Diameter up to 4000mm	For Diameter above 4000mm
Length:	1836/2743mm (6'0"/9'0")	3353mm (11'0")
Width:	300mm (1'0")	300mm (1'0")
Height:	Saddle + one/two wedges a top	Saddle + three/four wedges a top

Number of Saddles:	
Minimum	3 in case of Loading inside Well +1 when loaded on Gooseneck
Maximum:	4 in case of Loading inside Well +2 when loaded on Gooseneck

For Securing the equipment firmly on the Trailer, 19mm (3/4"), wire rope with 25mm (1") Heavy Duty Turn Buckles / BD Clamps are used as Lashing for the equipment.

12 GUIDELINES FOR HANDLING/LOADING/LASHING

- Jobs to be checked for complete painting before loading.
- Components to be lifted with Nylon belts. This protects painting, edges and attachments.
- All the components to be transported by putting inside the properly fabricated Crating
- Small components may fall down while transporting without closed crating and there are chances of missing of small parts. Hence, it is always better to transport small components in closed containers/crating. Loose to be being shipped in a closed crating.
- No component loaded over the crating.
- **LASHING:** Use Nylon belts only for lashing of all components. It prevents removal off painting and cut in the materials.

ANNEXURE-IX

CIVIL INPUT DETAILS

(Refer attached civil input assignment drawings.)

FIRST ANGLE PROJECTION

ALL DIMENSIONS ARE IN MM

ELEVATION ON MACHINE ROOM

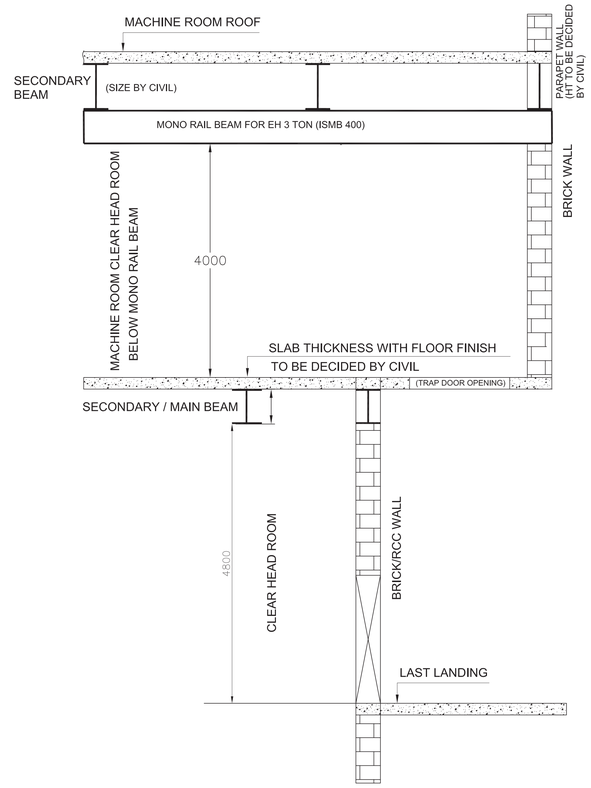

DETAIL–Y

STANDARD DETAILS OF SHAFT

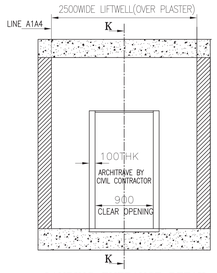

LANDING ENTRANCE DETAIL
(VIEW FROM LIFT WELL OUTSIDE)
(TYPICAL FOR ALL FLOORS)

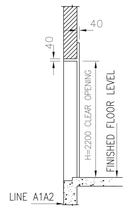

SECTION–KK

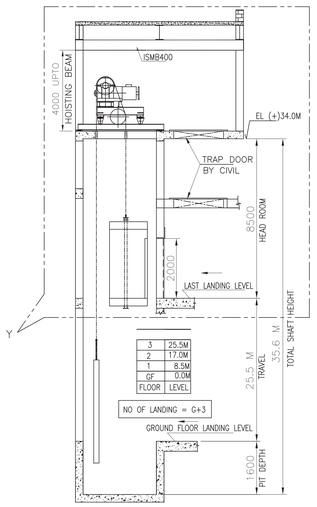

ELEVATIONAL DETAILS
(NOT FOR SCALE)

STANDARD DETAILS OF MACHINE ROOM

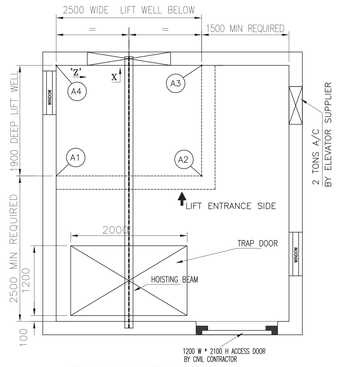

PLAN ON MACHINE ROOM

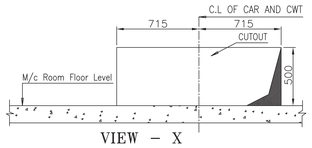

VIEW – X

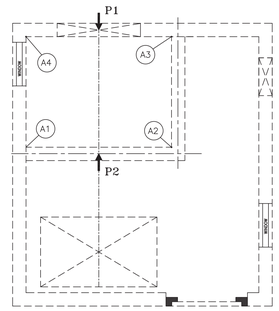

LOAD POSITION ON M/C ROOM PLAN

Point	Dynamic Load (Kg)
P1	16000
P2	8000

ELECTRICAL HOIST & BEAM BY BHEL

ISMB400

Capacity : 3000 kg	
Quantity : 1 Nos.	

DETAIL–S
(SCALE 1:3)

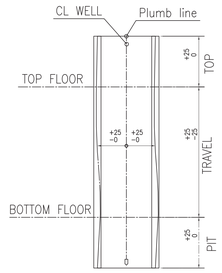

WELL TOLERANCES
(NOT FOR SCALE)

S.NO	AREA	SCOPE	DESCRIPTION OF WORK	AGENCY
1	PIT	CIVIL	PIT LADDER AND SCAFFOLDING IN ELEVATOR SHAFT.	BY VENDOR
2	PIT	CIVIL	PIT SHALL BE MADE DRY AND WATER PROOF.	BY CIVIL CONTRACTOR
3	PIT	CIVIL	BARE PIT SHALL BE PROVIDED. SUPPORTING MS STRUCTURE FOR CAR & CW BUFFER SHALL BE PROVIDED BY VENDOR.	BY VENDOR
4	PIT	CIVIL	PIT SLAB SHALL BE CASTED TO TAKE CARE OF CAR & COUNTERWEIGHT BUFFER LOADS (MAX. LOAD OF 21T) AS THE POSITION OF LOAD & STRUCTURED BUFFER IS VENDOR SPECIFIC . HENCE, CIVIL CONTRACTOR SHALL SIZE THE SLAB THICKNESS ACCORDINGLY WRT TOTAL LOAD OF 21T.	BY CIVIL CONTRACTOR
5	ELEVATOR CAR	ELECTRICAL	ELEVATOR CAR LIGHTING	BY VENDOR
6	ELEVATOR CAR	MECHANICAL	1/2 Kg CO / SUITABLE TYPE FIRE EXTINGUISHER ALONG WITH FIXING ARRANGEMENT.	BY VENDOR
7	AT EVERY LANDING	CIVIL	POCKET CUTTING / HOLES FOR LOP, FRD, LANDING DISPLAY & ANY OTHER FOR EVERY LANDING LEVEL SHALL BE DONE BY VENDOR.	BY VENDOR
8	AT EVERY LANDING	CIVIL	GROUTING FOR LOP, FRD, LANDING DISPLAY & ANY OTHER FOR FIXATION AT EVERY LANDING LEVEL SHALL BE DONE BY VENDOR.	BY VENDOR
9	ELEVATOR SHAFT	CIVIL	SHAFT WHITE WASHING.	BY CIVIL CONTRACTOR
10	ELEVATOR SHAFT	CIVIL	ALL ANCHOR BOLTS FOR FIXING GUIDE BRACKET AND BEAMS IN MACHINE ROOM.	BY VENDOR
11	ELEVATOR SHAFT	CIVIL	LIFT SHAFT HAS TO BE IN THE PLUMB LINE WITH A LIMIT OF -0 +25MM.	BY CIVIL CONTRACTOR
12	ELEVATOR SHAFT	ELECTRICAL	BULK HEAD FITTINGS OF MINIMUM 60 WATTS/ 18W CFL SHALL BE PROVIDED AT EVERY 3 METERS AND A PLUG POINT 15A/5A, 3 PIN AT EVERY 6 METERS-ADJACENT TO THE BULK HEAD FITTINGS. THE POSITION SHOULD BE AT ANY CORNER OF THE WALL OF COUNTER WEIGHT.	BY VENDOR
13	ELEVATOR SHAFT	ELECTRICAL	FIREMAN SWITCH & PIT SWITCHES.	BY VENDOR
14	ELEVATOR SHAFT	MECHANICAL	WIRE MESH BETWEEN CAR & COUNTER WEIGHT.	BY VENDOR
15	MACHINE ROOM	CIVIL	ELEVATOR MACHINE ROOM SHALL BE DESIGNED AS PER THE LOAD REQUIREMENTS GIVEN IN THE ENGG. INPUTS DRAWING FOR ELEVATOR.	BY CIVIL CONTRACTOR
16	MACHINE ROOM	CIVIL	PROVIDE THE REQUIRED HOLES/ POCKETS FOR MAIN ROPES / OSG ROPES/ SHAFT ELECTRIFICATION IN THE MACHINE ROOM FLOOR AS PER THE DIMENSIONS GIVEN IN THE ENGG. INPUTS DRAWING FOR ELEVATOR.	BY CIVIL CONTRACTOR
17	MACHINE ROOM	CIVIL	THE MONORAIL BEAM (3 TONS) FOR HOISTING THE MACHINE & HOIST TO BE PROVIDED AS PER THE ENGG. INPUTS DRAWING FOR ELEVATOR.	BY CIVIL CONTRACTOR (SUPPLY & ERECTION OF MONORAIL BEAM SHALL BE DONE BY CIVIL CONTRACTOR)
18	MACHINE ROOM	CIVIL	TRAP DOOR SHALL BE PROVIDED AS PER ENGG. INPUTS DRAWING FOR ELEVATOR.	BY CIVIL CONTRACTOR
19	MACHINE ROOM	CIVIL	SECONDARY BEAM ARRANGEMENT SHALL BE PERPENDICULAR TO MONORAIL BEAM.	BY CIVIL CONTRACTOR
20	MACHINE ROOM	CIVIL	STANDARD MACHINE ROOM DIMENSIONS AS REQUIRED ARE INDICATED IN THE DRAWING. TO SUIT CIVIL DESIGN WRT CIVIL STRUCTURE STABILITY, MACHINE ROOM SIZE CAN BE INCREASED (AS PER CIVIL REQUIREMENT) AND THEN SIZE OF MONORAIL BEAM(ISMB 400) AS MENTIONED IN DETAIL-Y VIEW SHALL BE FINALIZED BY CIVIL AGENCY.	BY CIVIL CONTRACTOR
21	MACHINE ROOM	CIVIL	PROPER ACCESS TO THE MACHINE ROOM SHALL BE PROVIDED AND IT SHOULD BE SAFE AND RIGID WITH HANDRAILS FOR ADEQUATE GRIP.	BY CIVIL CONTRACTOR
22	MACHINE ROOM	ELECTRICAL	THE MACHINE ROOM SHALL BE ADEQUATELY ILLUMINATED. THE MACHINE ROOM SHALL HAVE MINIMUM 200 LUX ILLUMINATION AT THE FLOOR LEVEL.	BY VENDOR
23	MACHINE ROOM	ELECTRICAL	CONVENIENT OUTLET (15A /5A) IN THE MACHINE ROOM TO BE PROVIDED FOR POWER TOOL USAGE.	BY VENDOR
24	MACHINE ROOM	ELECTRICAL	ONLY TWO (3 PHASE) SUPPLY FEEDERS PER ELEVATOR SHALL BE PROVIDED ONE FEEDER SHALL BE DEDICATED TO ELEVATOR MOTOR AND OTHER 3 PHASE SUPPLY FEEDER SHALL BE PROVIDED BY BHEL FOR AIR CONDITIONER, MACHINE ROOM AND SHAFT LIGHTING AND MAINTENANCE /INSTALLATION REQUIREMENT. VENDOR SHALL PROVIDE CT FOR STEPPING DOWN THE VOLTAGE AS PER THEIR REQUIREMENT.	BY ELECTRICAL CONTRACTOR (VENDOR TO CONSIDER CT IN THEIR SCOPE FOR STEPPING DOWN THE VOLTAGE AS PER THEIR REQUIREMENT)
25	MACHINE ROOM	ELECTRICAL	THE TERMINATION & TERMINATION BOX FOR THE FEEDERS SHALL BE PROVIDED.	BY VENDOR
26	MACHINE ROOM	ELECTRICAL	THE EARTHING LEADS / EARTH STRIPS SHALL BE PROVIDED NEAR ELEVATOR SHAFT AT GROUND FLOOR BY ELECTRICAL CONTRACTOR AND FROM GROUND FLOOR TO MACHINE ROOM SHALL BE ROUTED BY VENDOR.	BY ELECTRICAL CONTRACTOR & BY VENDOR
27	MACHINE ROOM	ELECTRICAL	EPABX CONNECTIVITY SHALL BE PROVIDED TILL MACHINE ROOM BY ELECTRICAL CONTRACTOR & FROM MACHINE ROOM TO ELEVATOR BY VENDOR	BY ELECTRICAL CONTRACTOR & BY VENDOR
28	MACHINE ROOM	MECHANICAL	SPLIT AC (MIN 2 TONS) TO BE PROVIDED IN THE EACH ELEVATOR MACHINE ROOM.	BY VENDOR
29	ELEVATOR SHAFT	CIVIL	ELEVATOR SHAFT SHALL BE OF CLAY BRICK (MIN. 230MM THK) OR R.C.C ONLY. (FLY ASH BRICKS NOT TO BE USED). LINTEL BEAM AT EVERY 2.3 M TO 2.5 M SHALL BE PROVIDED FOR COUNTER WEIGHT & CAR BRACKET FIXING.	BY CIVIL CONTRACTOR
30	ELEVATOR SHAFT	CIVIL	LIFT ENTRANCE SIDE WALL (ON ALL FLOORS) SHALL BE KEPT ON HOLD & SHALL BE CONSTRUCTED AFTER ORDERING/ RECEIVING INPUT FROM FINALLY SELECTED BIDDER. UPON LIFTING HOLD, FINAL WALL CONSTRUCTION SHALL BE DONE BY CIVIL CONTRACTOR ONLY.	BY CIVIL CONTRACTOR
31	ELEVATOR SHAFT	CIVIL	CLEAR HEADROOM OF 4.8M IS REQUIRED ABOVE LAST LANDING LEVEL OF ELEVATOR (EXCLUDING MACHINE ROOM SLAB THICKNESS & SECONDARY BEAM (IF ANY)). THE SAME IS TO BE ENSURED ACCORDINGLY BY CIVIL CONTRACTOR.	BY CIVIL CONTRACTOR
32	ELEVATOR SHAFT	CIVIL	IN CASE OF DUPLEX ARRANGEMENT OF ELEVATORS, WHERE ELEVATORS ARE PLACED SIDE BY SIDE. BRACKET OF GUIDE RAILS FOR BOTH THE ELEVATORS SHALL BE FIXED ON THE COMMON WALL BETWEEN BOTH LIFT SHAFTS. HENCE, THIS WALL MAY BE SUITABLY DESIGNED/ STRENGTHENED SO AS TO SUSTAIN REQUIRED GUIDE RAIL LOADS AS THIS WALL SHALL BE SUBJECT TO GUIDE RAIL FORCES FROM BOTH SIDES.	BY CIVIL CONTRACTOR
33	ELEVATOR SHAFT	CIVIL	DUMMY LANDING/S, ARE REQUIRED IN CASE TRAVEL BETWEEN TWO CONSECUTIVE LANDINGS IS MORE THAN 10 M, AS PER CODAL REQUIREMENT. HENCE, CORRESPONDING LANDING PLATFORMS & SUITABLE ACCESS LADDER/ STAIRS FOR DUMMY LANDING PLATFORMS ARE ALSO TO BE PROVIDE ACCORDINGLY.	BY CIVIL CONTRACTOR
34	ELEVATOR SHAFT	CIVIL	CIVIL LOADS SHALL BE TRANSFERRED TO WALLS (TYPICAL LOCATION AS SHOWN IN DRAWING). WALLS SHALL BE DESIGNED ACCORDINGLY.	BY CIVIL CONTRACTOR
35	MACHINE ROOM	CIVIL	CLEAR HEIGHT OF 4M IS REQUIRED IN THE ELEVATOR MACHINE ROOM BELOW MONORAIL BEAM (I.E. EXCLUDING MONORAIL BEAM (FOR ELECTRIC HOIST), SECONDARY BEAMS (IF ANY) & SLAB THICKNESS). HENCE, ELEVATION OF TOP OF MACHINE ROOM ROOF TO BE CALCULATED ACCORDINGLY BY CIVIL CONTRACTOR.	BY CIVIL CONTRACTOR
36	MACHINE ROOM	CIVIL	TRAP DOOR IS TO BE PLACED IN MACHINE ROOM TOWARDS ELEVATOR LANDING SIDE CONSIDERING THAT NO EQUIPMENTS/ OBJECTS SHALL BE LOCATED BELOW THE SAME AT LAST LANDING LEVEL FLOOR, ELSE IT WOULD CAUSE HINDRANCE IN MOVEMENT OF ELEVATOR MACHINERY OUT OF THE MACHINE ROOM DURING MAINTAINENCE.	BY CIVIL CONTRACTOR
37	PIT, SHAFT & MACHINE ROOM	CIVIL	NO PROJECTIONS ARE ALLOWED INSIDE THE LIFT SHAFT / PIT AND MACHINE ROOM. HENCE PLEASE ENSURE THAT ANY COLUMN / COLUMN FOUNDATIONS/ PLINTH BEAMS/ FLOOR SUPPORTING BEAMS SHOULD NOT BE PROJECTED INSIDE THE LIFT SHAFT/ PIT & ELEVATOR MACHINE ROOM.	BY CIVIL CONTRACTOR
38	MACHINE ROOM	CIVIL	MINIMUM REQUIREMENT OF MACHINE ROOM ALONG WITH TRAP DOOR ARE INDICATED HERE. HOWEVER PROJECT SPECIFIC REQUIREMENTS SHALL BE DISCUSSED ON CASE TO CASE BASIS.	BY CIVIL CONTRACTOR

NOTE: ALL DIMENSIONS ARE IN MM

STANDARD DETAILS OF PIT

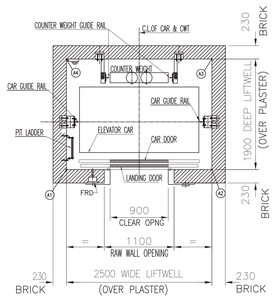

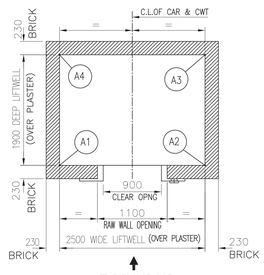

PLAN ON LIFTWELL

FORCES ON CAR & CWT GUIDE RAIL	
Fx	1300 N
Fy	600 N
J	23000 N

GUIDE RAIL FORCES

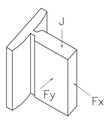

PLAN ON LIFTWELL– TYPICAL LOCATION OF GUIDERAILS FOR CAR & COUNTERWEIGHT

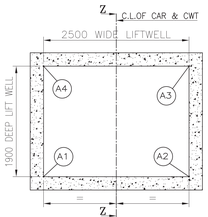

R.C.C DETAILS OF PIT

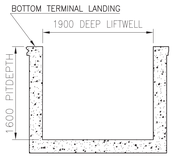

SECTION ZZ

CUSTOMER:	THDC INDIA LTD.
CONSULTANT:	NTPC
PROJECT:	2 X 660 MW KHURJA TG PACKAGE

BHARAT HEAVY ELECTRICALS LTD
POWER SECTOR
PROJECT ENGINEERING MANAGEMENT
NOIDA

JOB NO.	M-27
STATUS	PROPOSAL
DISTRIBUTION	

REV.	DATE	ALTD	CHD	APPD

COPY RIGHT AND CONFIDENTIAL
The information on this document is the property of BHARAT HEAVY ELECTRICALS LIMITED it must not be used directly or indirectly in any way detrimental to the interest of the company.

DEPT CODE	DRN.	NAME	SIGN	DATE
	DESN	RG		05.09.20
	CHD	PK		05.09.20
	APPD	GB		05.09.20

TITLE: ENGG. INPUTS DRAWING FOR 884KG CAPACITY ELEVATOR-TG BUILDING(1No.)

DEPT. | SCALE | SIGN

DRAWING NO. PE-DG-475-502-A001

SHEET 01 OF 01 | REV. 00

SIZE–A0

COMPUTER FILE NAME:

FIRST ANGLE PROJECTION

ALL DIMENSIONS ARE IN MM

ELEVATION ON MACHINE ROOM

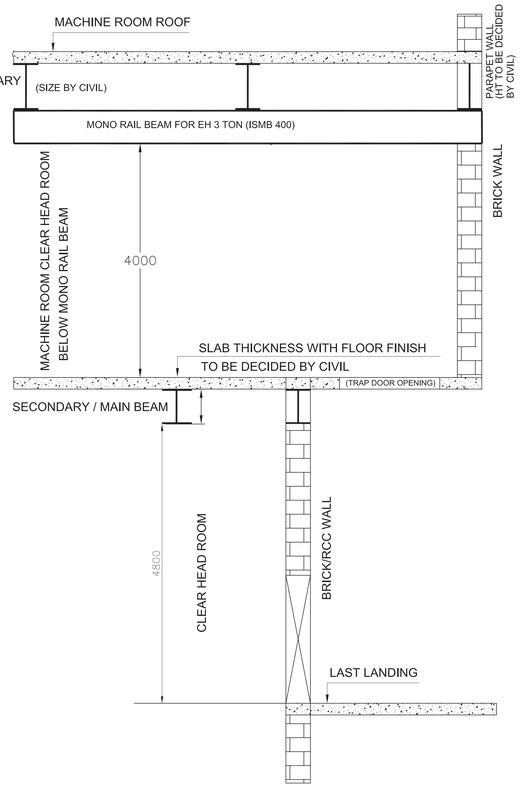

DETAIL–Y

STANDARD DETAILS OF SHAFT

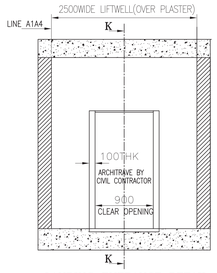

LANDING ENTRANCE DETAIL
(VIEW FROM LIFT WELL OUTSIDE)
(TYPICAL FOR ALL FLOORS)

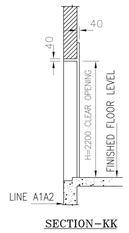

SECTION–KK

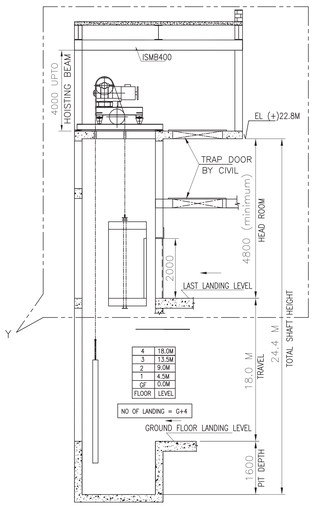

ELEVATIONAL DETAILS
(NOT FOR SCALE)

STANDARD DETAILS OF MACHINE ROOM

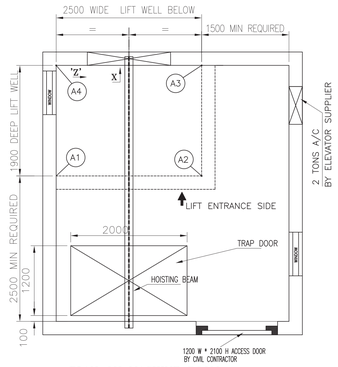

PLAN ON MACHINE ROOM

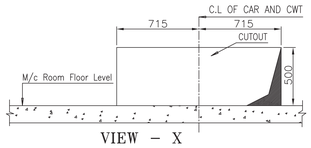

VIEW – X

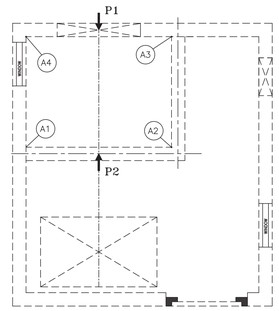

LOAD POSITION ON M/C ROOM PLAN

Point	Dynamic Load (Kg)
P1	16000
P2	8000

ELECTRICAL HOIST & BEAM BY BHEL

ISMB400

Capacity : 3000 kg	
Quantity : 1 Nos.	

DETAIL–S
(SCALE 1:3)

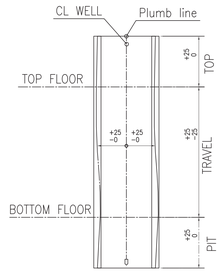

WELL TOLERANCES
(NOT FOR SCALE)

S.NO	AREA	SCOPE	DESCRIPTION OF WORK	AGENCY
1	PIT	CIVIL	PIT LADDER AND SCAFFOLDING IN ELEVATOR SHAFT.	BY VENDOR
2	PIT	CIVIL	PIT SHALL BE MADE DRY AND WATER PROOF.	BY CIVIL CONTRACTOR
3	PIT	CIVIL	BARE PIT SHALL BE PROVIDED. SUPPORTING MS STRUCTURE FOR CAR & CW BUFFER SHALL BE PROVIDED BY VENDOR.	BY VENDOR
4	PIT	CIVIL	PIT SLAB SHALL BE CASTED TO TAKE CARE OF CAR & COUNTERWEIGHT BUFFER LOADS (MAX. LOAD OF 21T) AS THE POSITION OF LOAD & STRUCTURED BUFFER IS VENDOR SPECIFIC . HENCE, CIVIL CONTRACTOR SHALL SIZE THE SLAB THICKNESS ACCORDINGLY WRT TOTAL LOAD OF 21T.	BY CIVIL CONTRACTOR
5	ELEVATOR CAR	ELECTRICAL	ELEVATOR CAR LIGHTING	BY VENDOR
6	ELEVATOR CAR	MECHANICAL	1/2 Kg CO / SUITABLE TYPE FIRE EXTINGUISHER ALONG WITH FIXING ARRANGEMENT.	BY VENDOR
7	AT EVERY LANDING	CIVIL	POCKET CUTTING / HOLES FOR LOP, FRD, LANDING DISPLAY & ANY OTHER FOR EVERY LANDING LEVEL SHALL BE DONE BY VENDOR.	BY VENDOR
8	AT EVERY LANDING	CIVIL	GROUTING FOR LOP, FRD, LANDING DISPLAY & ANY OTHER FOR FIXATION AT EVERY LANDING LEVEL SHALL BE DONE BY VENDOR.	BY VENDOR
9	ELEVATOR SHAFT	CIVIL	SHAFT WHITE WASHING.	BY CIVIL CONTRACTOR
10	ELEVATOR SHAFT	CIVIL	ALL ANCHOR BOLTS FOR FIXING GUIDE BRACKET AND BEAMS IN MACHINE ROOM.	BY VENDOR
11	ELEVATOR SHAFT	CIVIL	LIFT SHAFT HAS TO BE IN THE PLUMB LINE WITH A LIMIT OF -0 +25MM.	BY CIVIL CONTRACTOR
12	ELEVATOR SHAFT	ELECTRICAL	BULK HEAD FITTINGS OF MINIMUM 60 WATTS/ 18W CFL SHALL BE PROVIDED AT EVERY 3 METERS AND A PLUG POINT 15A/5A, 3 PIN AT EVERY 6 METERS-ADJACENT TO THE BULK HEAD FITTINGS. THE POSITION SHOULD BE AT ANY CORNER OF THE WALL OF COUNTER WEIGHT.	BY VENDOR
13	ELEVATOR SHAFT	ELECTRICAL	FIREMAN SWITCH & PIT SWITCHES.	BY VENDOR
14	ELEVATOR SHAFT	MECHANICAL	WIRE MESH BETWEEN CAR & COUNTER WEIGHT.	BY VENDOR
15	MACHINE ROOM	CIVIL	ELEVATOR MACHINE ROOM SHALL BE DESIGNED AS PER THE LOAD REQUIREMENTS GIVEN IN THE ENGG. INPUTS DRAWING FOR ELEVATOR.	BY CIVIL CONTRACTOR
16	MACHINE ROOM	CIVIL	PROVIDE THE REQUIRED HOLES/ POCKETS FOR MAIN ROPES / OSG ROPES/ SHAFT ELECTRIFICATION IN THE MACHINE ROOM FLOOR AS PER THE DIMENSIONS GIVEN IN THE ENGG. INPUTS DRAWING FOR ELEVATOR.	BY CIVIL CONTRACTOR
17	MACHINE ROOM	CIVIL	THE MONORAIL BEAM (3 TONS) FOR HOISTING THE MACHINE & HOIST TO BE PROVIDED AS PER THE ENGG. INPUTS DRAWING FOR ELEVATOR.	BY CIVIL CONTRACTOR (SUPPLY & ERECTION OF MONORAIL BEAM SHALL BE DONE BY CIVIL CONTRACTOR)
18	MACHINE ROOM	CIVIL	TRAP DOOR SHALL BE PROVIDED AS PER ENGG. INPUTS DRAWING FOR ELEVATOR.	BY CIVIL CONTRACTOR
19	MACHINE ROOM	CIVIL	SECONDARY BEAM ARRANGEMENT SHALL BE PERPENDICULAR TO MONORAIL BEAM.	BY CIVIL CONTRACTOR
20	MACHINE ROOM	CIVIL	STANDARD MACHINE ROOM DIMENSIONS AS REQUIRED ARE INDICATED IN THE DRAWING. TO SUIT CIVIL DESIGN WRT CIVIL STRUCTURE STABILITY, MACHINE ROOM SIZE CAN BE INCREASED (AS PER CIVIL REQUIREMENT) AND THEN SIZE OF MONORAIL BEAM(ISMB 400) AS MENTIONED IN DETAIL-Y VIEW SHALL BE FINALIZED BY CIVIL AGENCY.	BY CIVIL CONTRACTOR
21	MACHINE ROOM	CIVIL	PROPER ACCESS TO THE MACHINE ROOM SHALL BE PROVIDED AND IT SHOULD BE SAFE AND RIGID WITH HANDRAILS FOR ADEQUATE GRIP.	BY CIVIL CONTRACTOR
22	MACHINE ROOM	ELECTRICAL	THE MACHINE ROOM SHALL BE ADEQUATELY ILLUMINATED. THE MACHINE ROOM SHALL HAVE MINIMUM 200 LUX ILLUMINATION AT THE FLOOR LEVEL.	BY VENDOR
23	MACHINE ROOM	ELECTRICAL	CONVENIENT OUTLET (15A /5A) IN THE MACHINE ROOM TO BE PROVIDED FOR POWER TOOL USAGE.	BY VENDOR
24	MACHINE ROOM	ELECTRICAL	ONLY TWO (3 PHASE) SUPPLY FEEDERS PER ELEVATOR SHALL BE PROVIDED ONE FEEDER SHALL BE DEDICATED TO ELEVATOR MOTOR AND OTHER 3 PHASE SUPPLY FEEDER SHALL BE PROVIDED BY BHEL FOR AIR CONDITIONER, MACHINE ROOM AND SHAFT LIGHTING AND MAINTENANCE /INSTALLATION REQUIREMENT. VENDOR SHALL PROVIDE CT FOR STEPPING DOWN THE VOLTAGE AS PER THEIR REQUIREMENT.	BY ELECTRICAL CONTRACTOR (VENDOR TO CONSIDER CT IN THEIR SCOPE FOR STEPPING DOWN THE VOLTAGE AS PER THEIR REQUIREMENT)
25	MACHINE ROOM	ELECTRICAL	THE TERMINATION & TERMINATION BOX FOR THE FEEDERS SHALL BE PROVIDED.	BY VENDOR
26	MACHINE ROOM	ELECTRICAL	THE EARTHING LEADS / EARTH STRIPS SHALL BE PROVIDED NEAR ELEVATOR SHAFT AT GROUND FLOOR BY ELECTRICAL CONTRACTOR AND FROM GROUND FLOOR TO MACHINE ROOM SHALL BE ROUTED BY VENDOR.	BY ELECTRICAL CONTRACTOR & BY VENDOR
27	MACHINE ROOM	ELECTRICAL	EPABX CONNECTIVITY SHALL BE PROVIDED TILL MACHINE ROOM BY ELECTRICAL CONTRACTOR & FROM MACHINE ROOM TO ELEVATOR BY VENDOR	BY ELECTRICAL CONTRACTOR & BY VENDOR
28	MACHINE ROOM	MECHANICAL	SPLIT AC (MIN 2 TONS) TO BE PROVIDED IN THE EACH ELEVATOR MACHINE ROOM.	BY VENDOR
29	ELEVATOR SHAFT	CIVIL	ELEVATOR SHAFT SHALL BE OF CLAY BRICK (MIN. 230MM THK) OR R.C.C ONLY. (FLY ASH BRICKS NOT TO BE USED). LINTEL BEAM AT EVERY 2.3 M TO 2.5 M SHALL BE PROVIDED FOR COUNTER WEIGHT & CAR BRACKET FIXING.	BY CIVIL CONTRACTOR
30	ELEVATOR SHAFT	CIVIL	LIFT ENTRANCE SIDE WALL (ON ALL FLOORS) SHALL BE KEPT ON HOLD & SHALL BE CONSTRUCTED AFTER ORDERING/ RECEIVING INPUT FROM FINALLY SELECTED BIDDER. UPON LIFTING HOLD, FINAL WALL CONSTRUCTION SHALL BE DONE BY CIVIL CONTRACTOR ONLY.	BY CIVIL CONTRACTOR
31	ELEVATOR SHAFT	CIVIL	CLEAR HEADROOM OF 4.8M IS REQUIRED ABOVE LAST LANDING LEVEL OF ELEVATOR (EXCLUDING MACHINE ROOM SLAB THICKNESS & SECONDARY BEAM (IF ANY)). THE SAME IS TO BE ENSURED ACCORDINGLY BY CIVIL CONTRACTOR.	BY CIVIL CONTRACTOR
32	ELEVATOR SHAFT	CIVIL	IN CASE OF DUPLEX ARRANGEMENT OF ELEVATORS, WHERE ELEVATORS ARE PLACED SIDE BY SIDE. BRACKET OF GUIDE RAILS FOR BOTH THE ELEVATORS SHALL BE FIXED ON THE COMMON WALL BETWEEN BOTH LIFT SHAFTS. HENCE, THIS WALL MAY BE SUITABLY DESIGNED/ STRENGTHENED SO AS TO SUSTAIN REQUIRED GUIDE RAIL LOADS AS THIS WALL SHALL BE SUBJECT TO GUIDE RAIL FORCES FROM BOTH SIDES.	BY CIVIL CONTRACTOR
33	ELEVATOR SHAFT	CIVIL	DUMMY LANDING/S, ARE REQUIRED IN CASE TRAVEL BETWEEN TWO CONSECUTIVE LANDINGS IS MORE THAN 10 M, AS PER CODAL REQUIREMENT. HENCE, CORRESPONDING LANDING PLATFORMS & SUITABLE ACCESS LADDER/ STAIRS FOR DUMMY LANDING PLATFORMS ARE ALSO TO BE PROVIDE ACCORDINGLY.	BY CIVIL CONTRACTOR
34	ELEVATOR SHAFT	CIVIL	CIVIL LOADS SHALL BE TRANSFERRED TO WALLS (TYPICAL LOCATION AS SHOWN IN DRAWING). WALLS SHALL BE DESIGNED ACCORDINGLY.	BY CIVIL CONTRACTOR
35	MACHINE ROOM	CIVIL	CLEAR HEIGHT OF 4M IS REQUIRED IN THE ELEVATOR MACHINE ROOM BELOW MONORAIL BEAM (I.E. EXCLUDING MONORAIL BEAM (FOR ELECTRIC HOIST), SECONDARY BEAMS (IF ANY) & SLAB THICKNESS). HENCE, ELEVATION OF TOP OF MACHINE ROOM ROOF TO BE CALCULATED ACCORDINGLY BY CIVIL CONTRACTOR.	BY CIVIL CONTRACTOR
36	MACHINE ROOM	CIVIL	TRAP DOOR IS TO BE PLACED IN MACHINE ROOM TOWARDS ELEVATOR LANDING SIDE CONSIDERING THAT NO EQUIPMENTS/ OBJECTS SHALL BE LOCATED BELOW THE SAME AT LAST LANDING LEVEL FLOOR, ELSE IT WOULD CAUSE HINDRANCE IN MOVEMENT OF ELEVATOR MACHINERY OUT OF THE MACHINE ROOM DURING MAINTAINENCE.	BY CIVIL CONTRACTOR
37	PIT, SHAFT & MACHINE ROOM	CIVIL	NO PROJECTIONS ARE ALLOWED INSIDE THE LIFT SHAFT / PIT AND MACHINE ROOM. HENCE PLEASE ENSURE THAT ANY COLUMN / COLUMN FOUNDATIONS/ PLINTH BEAMS/ FLOOR SUPPORTING BEAMS SHOULD NOT BE PROJECTED INSIDE THE LIFT SHAFT/ PIT & ELEVATOR MACHINE ROOM.	BY CIVIL CONTRACTOR
38	MACHINE ROOM	CIVIL	MINIMUM REQUIREMENT OF MACHINE ROOM ALONG WITH TRAP DOOR ARE INDICATED HERE. HOWEVER PROJECT SPECIFIC REQUIREMENTS SHALL BE DISCUSSED ON CASE TO CASE BASIS.	BY CIVIL CONTRACTOR

NOTE: ALL DIMENSIONS ARE IN MM

STANDARD DETAILS OF PIT

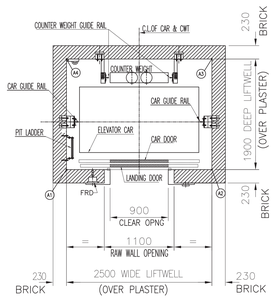

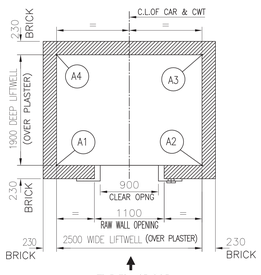

PLAN ON LIFTWELL

FORCES ON CAR & CWT GUIDE RAIL	
Fx	1300 N
Fy	600 N
J	23000 N

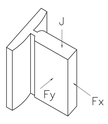

GUIDE RAIL FORCES

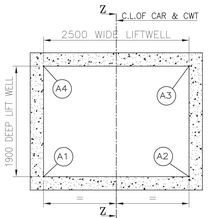

PLAN ON LIFTWELL– TYPICAL LOCATION OF GUIDERAILS FOR CAR & COUNTERWEIGHT

R.C.C DETAILS OF PIT

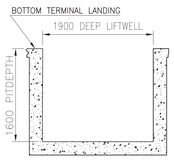

SECTION ZZ

CUSTOMER:	THDC INDIA LTD.
CONSULTANT:	NTPC
PROJECT:	2 X 660 MW KHURJA TG PACKAGE

BHARAT HEAVY ELECTRICALS LTD
POWER SECTOR
PROJECT ENGINEERING MANAGEMENT
NOIDA

JOB NO.	M-27
STATUS	PROPOSAL
DISTRIBUTION	

REV.	DATE	ALTD	CHD	APPD

COPY RIGHT AND CONFIDENTIAL
The information on this document is the property of BHARAT HEAVY ELECTRICALS LIMITED it must not be used directly or indirectly in any way deterimental to the interest of the company.

DEPT CODE	DRN.	NAME	SIGN	DATE
	DESN	RG		22.02.21
	CHD	PK		22.02.21
	APPD	GB		22.02.21

TITLE: ENGG. INPUTS DRAWING FOR 884KG CAPACITY ELEVATOR-SERVICE BUILDING(2Nos.)

DEPT. | SCALE | SIGN | DRAWING NO. PE-DG-475-502-A002

SHEET 01 OF 01 | REV. 00

SIZE–A0

COMPUTER FILE NAME:

SECTION – IB

SPECIFIC TECHNICAL REQUIREMENT-ELECTRICAL

1.0 **EQUIPMENT & SERVICES TO BE PROVIDED BY BIDDER:**

a) Services and equipment as per "Electrical Scope between BHEL and Vendor".
b) Any item/work either supply of equipment or erection material which have not been specifically mentioned but are necessary to complete the work for trouble free and efficient operation of the plant shall be deemed to be included within the scope of this specification. The same shall be provided by the bidder without any extra charge.
c) Supply of mandatory spares as specified in the specifications of mechanical equipments.
d) Electrical load requirement for ELEVATOR in load data format.
e) All equipment shall be suitable for the power supply fault levels and other climatic conditions mentioned in the enclosed project information.
f) Bidder to furnish list of makes for each equipment at contract stage, which shall be subject to customer/BHEL approval without any commercial and delivery implications to BHEL
g) Various drawings, data sheets as per required format, Quality plans, calculations, test reports, test certificates, operation and maintenance manuals etc shall be furnished as specified at contract stage. All documents shall be subject to customer/BHEL approval without any commercial implication to BHEL.
h) Motor shall meet minimum requirement of motor specification.
i) Vendor to clearly indicate equipment locations and local routing lengths in their cable listing furnished to BHEL.
j) Cable BOQ worked out based on routing of cable listing provided by the vendor for " both end equipment in vendor's scope"shall be binding to the vendor with +10 % margin to take care of slight variation in routing length & wastages.

2.0 **EQUIPMENT & SERVICES TO BE PROVIDED BY PURCHASER FOR ELECTRICAL & TERMINAL POINTS:**

Refer "Electrical Scope between BHEL and Vendor".

3.0 DOCUMENTS TO BE SUBMITTED ALONG WITH BID

3.1 The electrical specification without any deviation from the technical/quality assurance requirements stipulated shall be deemed to be complied by the bidder in case bidder furnishes the overall compliance of package technical specification in the form of compliance certificate/No deviation certificate.

3.2 No technical submittal such as copies of data sheets, drawings, write-up, quality plans, type test certificates, technical literature, etc, is required during tender stage. Any such submission even if made, shall not be considered as part of offer.

REV: 00 DATE: 12.03.2015

STANDARD ELECTRICAL SCOPE BETWEEN BHEL AND VENDOR (FOR EPC PROJECTS)

PACKAGE: ELEVATOR

SCOPE OF VENDOR: SUPPLY, ERECTION & COMMISSIONING OF VENDOR'S EQUIPMENT

PROJECT: **2 X 660 MW KHURJA TPP**

ANNEXURE-A

S. NO	DETAILS	SCOPE SUPPLY	SCOPE E&C	REMARKS
1	Isolating Switch	Vendor	Vendor	BHEL will provide one number 415V (3ph, 4W) supply feeder only up to isolating switches for elevators. Any other voltage level (AC/DC) required will be derived by the vendor. Motor starter shall be part of elevator control panel.
2	Power cables, control cables, screened control cables and any special cables (if required) between equipment supplied by vendor.	Vendor	Vendor	Cable from supply feeder to isolating switch shall be in BHEL scope.
3	Cabling material (cable trays, accessories, cable tray supporting system, conduits etc).	Vendor	Vendor	
4	Equipment Earthing	Vendor	Vendor	All equipment metallic enclosures / frames, metal structure etc. shall be grounded at two points each to the nearest grounding points / risers provided by BHEL.
5	Motors	Vendor	Vendor	
6	Cable glands and lugs for equipment supplied by vendor	Vendor	Vendor	1. Double compression Ni-Cr plated brass cable glands 2. Solder less crimping type heavy duty tinned copper lugs for power & control cables.
7	a) Input cable schedules (C & I) b) Cable interconnection details for above c) Cable block diagram	Vendor Vendor Vendor	- - -	Cable listing for Control and Instrumentation Cable in enclosed excel format shall be submitted by vendor during detailed engineering stage.
8	Equipment layout drawings	Vendor	-	
9	Electrical Equipment GA drawing	Vendor	-	For necessary interface review.

TITLE		SPECIFICATION NO.
	LV MOTORS **DATA SHEET-A** **2X660 MW KHURJA TG TPP**	VOLUME II B SECTION D REV NO. 00 DATE 23.03.2021 SHEET 1 OF 1

1.0	Design ambient temperature	:	50 °C
2.0	Maximum acceptable kW rating of LV motor	:	200KW
3.0	Installation (Indoors/ Outdoors)	:	As required
4.0	Details of supply system		
	a) Rated voltage (with variation)	:	415V ± 10%
	b) Rated frequency (with variation)	:	50 Hz (+3% and -5%)
	c) Combined voltage & freq. variation	:	10% (sum of absolute values)
	d) System fault level at rated voltage	:	50 kA for 1 sec
	e) Short time rating for terminal boxes		
	o 110 kW and upto 200kW (Breaker controlled)	:	50 KA for 1 sec.
	o Below 110 kW (MPCB)	:	MCCB with inbuilt fixed setting magnetic release for Short-circuit along-with separate adjustable overload relay shall be provided.
	f) LV System grounding	:	Effectively grounded
5.0	Class of insulation	:	Thermal class B or better.
6.0	Minimum voltage for starting (As percentage of rated voltage)	:	85% of rated voltage for rating below 110KW and 80% of rated voltage or rating between 110 and 200KW
7.0	Power cables data	:	Shall be given during Detailed engg
8.0	Earth Conductor Size & Material	:	Shall be given during Detailed engg
9.0	Space heater supply	:	240 V, 1¢ , 50 Hz
10.0	Rating up to which Single phase motor	:	Acceptable below 0.20 kW
11.0	Additional tests	:	As per QP and customer motor spec
12.0	Flame-proof motor		
	a) Enclosure suitable (As per IS:2148)	:	As per requirement
	b) Classification of Hazardous area (As per IS: 5572 part-I)	:	As per requirement
13.0	Makes	:	As per ANNEXURE-I
14.0	Paint shade	:	RAL 5012
15.0	Degree of Protection of enclosure (motors):		INDOOR IP-54 OUTDOOR IPW-55
16.0	Energy efficiency	:	IE3 as per IS:12615: 2011

288648/2021/PS-PEM-MAX

TITLE	SPECIFICATION NO.
LV MOTORS **DATA SHEET-A** **2X660 MW KHURJA TG TPP**	VOLUME II B SECTION D REV NO. 00 DATE 22.03.2021 SHEET 1 OF 1

- **Also detail Customer spec. for Motors to be referred as enclosed with spec.**

	TITLE	SPECIFICATION NO.
	MOTOR	VOLUME II B
		SECTION IB
	DATA SHEET - C	REV NO. 00
		SHEET 1 OF 2

S. No.	Description		Data to be filled by successful bidder
A.	**General**		
1	Manufacturer & country of origin		
2	Motor type		
3	Type of starting		
4	Name of the equipment driven by motor & Quantity		
5	Maximum Power requirement of driven equipment		
6	Rated speed of Driven Equipment		
7	Design ambient temperature		
B.	**Design and Performance Data**		
1	Frame size & type designation		
2	Type of duty		
3	Rated Voltage		
4	Permissible variation for		
5	a	Voltage	
6	b	Frequency	
7	c)	Combined voltage & frequency	
8	Rated output at design ambient temp (by resistance method)		
9	Synchronous speed & Rated slip		
10	Minimum permissible starting voltage		
11	Starting time in sec with mechanism coupled		
12	a) At rated voltage		
13	b) At min starting voltage		
14	Locked rotor current as percentage of FLC (including IS tolerance)		
15	Torque		
	a) Starting		
	b) Maximum		
16	Permissible temp rise at rated output over ambient temp & method		
17	Noise level at 1.0 m (dB		
18	Amplitude of vibration		
19	Efficiency & P.F. at rated voltage & frequency		
	a) At 100% load		
	c) At 75% load		

NAME OF VENDOR					
			SEAL	REV.	
NAME	SIGNATURE	DATE			

	TITLE	SPECIFICATION NO.
	MOTOR	VOLUME II B
		SECTION IB
	DATA SHEET - C	REV NO. 00
		SHEET 2 OF 2

S. No.	Description	Data to be filled by successful bidder
	c) At starting	
C.	**Constructional Features**	
1	Method of connection of motor driven equipment	
2	Applicable Standard	
3	DOP of Enclosure	
4	Method of cooling	
5	Class of insulation	
6	Main terminal box	
	a) Type	
	b) Power Cable details (Conductor, size, armour/unarmour)	
	c) Cable Gland & lugs details (Size, type & material)	
	d) Permissible Fault level (kArms & duration in sec)	
7	Space heater details (Voltage & watts)	
8	Flame proof motor details (if applicable)	
	a) Enclosure	
	b) suitability for hazardous area	
	i Zone	O / I / II
	ii Group	IIA / IIB / IIC
9	No. of Stator winding	
10	Winding connection	
11	Kind of rotor winding	
12	Kind of bearings	
13	Direction of rotation when viewed from NDE	
14	Paint Shade & type	
15	Net weight of motor	
16	Outline mounting drawing No (To be enclosed as annexure)	
D.	**Characteristic curves/ drawings** (To be enclosed for motors of rating ≥ 55KW)	
	a) Torque speed characteristic	
	b) Thermal withstand characteristic	
	c) Current vs time	
	d) Speed vs time	

NAME OF VENDOR					
			SEAL	REV.	
NAME	SIGNATURE	DATE			

CUSTOMER SPECIFICATION FOR ELECTRICAL PART

1. ELEVATOR-(ELECTRICALS)
2. MOTORS
3. LT POWER CABLES
3. LT CONTROL CABLES
5. CABLING EARTHING LIGHTNING AND PROTECTION
6. LT SWITCHGEAR & LT BUSDUCT

SUB–SECTION – B-10

ELEVATOR (ELECTRICALS)

KHURJA SUPER THERMAL POWER PROJECT (2X660 MW) TURBINE GENERATOR AND ASSOCIATED PACKAGES BID DOC. NO.: THDC/RKSH/CC-9915-371	SEPARATOR

CLAUSE NO.	TECHNICAL REQUIREMENTS

ELEVATORS (ELECTRICALS)

1.00.00 **CODES AND STANDARDS**

1.01.00 All standards, specifications and codes of practice referred to herein shall be the latest editions including all applicable official amendments and revisions. In case of conflict between this specification and those (IS codes, standards, etc.) referred to herein, the former shall prevail. All work shall be carried out as per the following standards/ codes as applicable.

IS:4722, IS:325

2.00.00 **Electric motor:**

The driving motors shall conform to I.S 325 and suitable for the Variable Voltage Variable Frequency (VVVF) application. All motors shall be squirrel cage induction type, suitable for operation at 415V (+/- 10% variation) , 3 phase, 3 wire, 50HZ (+3% to -5% variation) supply. Motors shall be provided with **thermal class 130 (B) or better insulation**

3.00.00 **CAR ELECTRICAL ACCESSORIES** The following accessories shall be provided :

i) LED light fittings for illumination level of 100 lux on car floor.

ii) Portable light and alarm bell with battery and charger ventilation fan with control.

iii) Car control station with position indicator inside the car and at landing platforms (both visual and audio).

iv) Emergency stop switch.

v) 5/15A ,3 pin plug socket with switch on top of lift car.

vi) Hand free speaker telephone set connected to plant network.

vii) AUTOMATIC RESCUE DEVICE (ARD)-(BATTERY DRIVE) :

Bidder to provide a modern Advanced electronic drive system of “RESCUING Passenger Trapped in a ELEVATOR”.

viii) EMERGENCY SAFETY DEVICES :

The lift shall be provided with safety Device attached to the lift car frame and placed beneath the car. The safety device shall be capable of stopping and sustaining the lift car up at governor tripping speed with full rated load in car.

4.00.00 **OPERATIONAL REQUIRMENTS:**

a. Bidder shall provide car operating panel with luminous buttons, car position indication in car (both visual and audio) combined with direction arrows, overload warning indicator, battery operated alarm bell and emergency light and fan & hands free speaker telephone set with suitable battery, charger & controls.

b. Bidder shall provide emergency indicator to indicate the location of elevator in case of elevator being stuck up between the floors through automatic flashers (both audio & visual).

c. Bidder shall provide electronic door detector (Infra red curtain type).

d. Digital hall position indicator at all floors, tell lights at all floors shall also be provided by the bidder.

e. For facilitating the movement of visually & hearing impaired persons, hall lantern and car arrival chimes shall be provided

f. All fixtures shall be in stainless steel face plates.

g. Push buttons shall be fixed in the car for holding the doors open for any length of the time required.

h. All other safety/protection/operation interlocks as required by IS:14665 (latest edition).

4.00.00 **POWER SUPPLY**

Each elevator shall be provided with a separate three phase, three wire 415V feeder of adequate rating

5.00.00 **Controls:**

The controls shall be Variable Voltage and Variable frequency type and shall provide smooth and constant acceleration and retardation under all conditions of operation . Suitable control panel shall be provided in the machine room.

6.00.00 **Cables and wiring:**

All the cables except trailing cables shall be as per IS:1554-1 or IS-7098-I. the PVC outer sheath of these cables shall be flame retardant, low smoke (FRLS) type with the following FRLS properties.

a) Oxygen index of min. 29 (as per IS:10810 Part-58)
b) Acid gas emission of max. 20% (as per IEC-754-I).
c) Smoke density rating shall not be more than 60% (as per ASTMD-2843).

The circular trailing cables shall be either in accordance with IS 4289 Part-I (Elastomer insulated) or IS-4289 Part-II (PVC insulated). The flat type trailing cables if offered shall be in accordance with IEC-60227-6.

All wiring / cabling between the equipments in the lift machine room and that between the machine room and equipments in the lift well and at the landings shall be wired in HDP conduits/ galvanized steel conduits to be supplied by the contractor. Alternatively armored cables may be used.

7.00.00 **Earthing:**

The elevator structures and all Electrical equipment, including metal conduits shall be effectively earthed with the earth conductors provided in the machine room as per IS: 3043.

SUB–SECTION – B-2

MOTORS

MOTORS

1.00.00 GENERAL REQUIREMENTS

1.01.00 For the purpose of design of equipment/systems, an ambient temperature of 50 deg. Centigrade and relative humidity of 95% (at 40 deg C) shall be considered. The equipment shall operate in a highly polluted environment.

1.02.00 All equipment shall be suitable for rated frequency of 50 Hz with a variation of +3% & -5%, and 10% combined variation of voltage and frequency unless specifically brought out in the specification.

1.03.00 Contractor shall provide fully compatible electrical system, equipment, accessories and services.

1.04.00 All the equipment, material and systems shall, in general, conform to the latest edition of relevant National and international Codes & Standards, especially the Indian Statutory Regulations.

1.05.00 Paint shade shall be as per RAL 5012 (Blue) for indoor and outdoor equipment.

1.06.00 The responsibility of coordination with electrical agencies and obtaining all necessary clearances for contractors equipment and systems shall be under the contractor scope.

1.07.00 Degree of Protection

Degree of protection for various enclosures as per IEC60034-05 shall be as follows:-

i)	Indoor motors	-	IP 54
ii)	Outdoor motors	-	IP 55
iii)	Cable box-indoor area	-	IP 54
iv)	Cable box-Outdoor area	-	IP 55

2.00.00 CODES AND STANDARDS

1)	Three phase induction motors	:	IS/IEC:60034
2)	Single phase AC motors	:	IS/IEC:60034
3)	Crane duty motors	:	IS:3177, IS/IEC:60034
4)	DC motors/generators	:	IS/IEC:60034
5)	Energy Efficient motors	:	IS 12615, IEC: 60034-30

CLAUSE NO.	TECHNICAL REQUIREMENTS
3.00.00	**TYPE**
3.01.00	**AC Motors:** a) Squirrel cage induction motor suitable for direct-on-line starting. b) Continuous duty LT motors upto 200 KW Output rating (at 50 deg.C ambient temperature), shall be Premium Efficiency class-IE3, conforming to IS 12615, or IEC:60034-30. HT motors shall have minimum design efficiency of 95 % Tolerance on efficiency value applicable as per IEC 60034. c) Crane duty motors shall be squirrel cage Induction motor as per the requirement. d) Motor operating through variable frequency drives shall be suitable for inverter duty with VPI insulation. Also these motors shall comply the requirements stipulated in IEC: 60034-18-41 and IEC: 60034-18-42 as applicable. e) Motors operating through variable frequency drives shall also meet the requirements mentioned in subsection for VFD.
3.02.00	DC Motors Shunt wound
4.00.00	**RATING** (a) Continuously rated (S1). However, crane motors shall be rated for S4 duty, 40% cyclic duration factor. (b) Whenever the basis for motor or driven equipment ratings are not specified in the corresponding mechanical specification sub-sections, maximum continuous motor ratings shall be at least 10% above the maximum load demand of the driven equipment under entire operating range including voltage and frequency variations.
5.00.00	**TEMPERATURE RISE** **Air cooled motors** 70 deg. C by resistance method for both thermal class 130(B) & 155(F) insulation. **Water cooled** 80 deg. C over inlet cooling water temperature mentioned elsewhere, by resistance method for both thermal class 130(B) & 155(F) insulation. 41 deg.C over inlet cooling water maximum temperature of 39 deg.C for thermal class 90 (Y) wet wound Boiler circulation pump motor.
6.00.00	**OPERATIONAL REQUIREMENTS**

6.01.00	**Starting Time**
6.01.01	For motors with starting time upto 20 secs. at minimum permissible voltage during starting, the locked rotor withstand time under hot condition at highest voltage limit shall be at least 2.5 secs. more than starting time.
6.01.02	For motors with starting time more than 20 secs. and upto 45 secs. at minimum permissible voltage during starting, the locked rotor withstand time under hot condition at highest voltage limit shall be at least 5 secs. more than starting time.
6.01.03	For motors with starting time more than 45 secs. at minimum permissible voltage during starting, the locked rotor withstand time under hot condition at highest voltage limit shall be more than starting time by at least 10% of the starting time.
6.01.04	Speed switches mounted on the motor shaft shall be provided in cases where above requirements are not met.
6.02.00	**Torque Requirements**
6.02.01	Accelerating torque at any speed with the lowest permissible starting voltage shall be at least 10% motor full load torque.
6.02.02	Pull out torque at rated voltage shall not be less than 205% of full load torque. It shall be 275% for crane duty motors.
6.03.00	**Starting voltage requirement**
	(a) Up to 85% of rated voltage for ratings below 110 KW
	(b) Up to 80% of rated voltage for ratings from 110 KW to 200 KW
	(c) Up to 85% of rated voltage for ratings from 201 KW to 1000 KW
	(d) Up to 80% of rated voltage for ratings from 1001 KW to 4000 KW
	(e) Up to 75 % of rated voltage for ratings above 4000KW
	Except AOP & JOP motors running on D.G emergency supply, starting voltage shall be 80%.
7.00.00	**DESIGN AND CONSTRUCTIONAL FEATURES**
7.01.00	Suitable single phase space heaters shall be provided on motors rated 30KW and above to maintain windings in dry condition when motor is standstill. Separate terminal box for space heaters & RTDs shall be provided. However for flame proof motors, space heater terminals inside the main terminal box may be acceptable.
7.02.00	All motors shall be either Totally enclosed fan cooled (TEFC) or totally enclosed tube ventilated (TETV) or Closed air circuit air cooled (CACA) type. However, motors rated 3000KW or above can be Closed air circuit water cooled (CACW). The method of movement

of primary and secondary coolant shall be self-circulated by fan or pump directly mounted on the rotor of the main motor as per IEC 60034-6. However VFD driven motors can be offered with forced cooling type with machine mounted fan or pump driven by separate electric motor. Motors and EPB located in hazardous areas shall have flame proof enclosures conforming to IS: 2148 as detailed below

(a) Fuel oil area : Group – IIB

(b) Hydrogen generation : Group - IIC or (Group-I, Div-II as per plant area NEC) or (Class-1, Group-B, Div-II as per NEMA / IEC60034)

7.03.00 Winding and Insulation

(a) Type : Non-hygroscopic, oil resistant, flame resistant

(b) Starting duty : Two hot starts in succession, with motor initially at normal running temperature.

(c) 11kV & 3.3 kV AC motors : Thermal class 155 (F) insulation.
The winding insulation process shall be Global Vacuum Pressure Impregnated i.e. resin poor method. The lightning Impulse & interturn insulation surge withstand level shall be as per IEC-60034 part-15.

However winding insulation for wet wound Boiler circulation pump motor shall be thermal class 90 (Y) or better.

(d) 240VAC, 415V AC & 220V DC motors : Thermal Class (B) or better

7.04.00 Motors rated above 1000KW shall have insulated bearings/housing to prevent flow of shaft currents.

7.05.00 Motors with heat exchangers shall have dial type thermometer with adjustable alarm contacts to indicate inlet and outlet primary air temperature.

7.06.00 Noise level for all the motors shall be limited to 85dB (A) except for BFP motor for which the maximum limit shall be 90 dB(A). Vibration shall be limited within the limits prescribed in IS/IEC 60034-14. Motors shall withstand vibrations produced by driven equipment. HT motor bearing housings shall have flat surfaces, in both X and Y directions, suitable for mounting 80mmX80mm vibration pads.

7.07.00 In HT motors, at least four numbers simplex / two numbers duplex platinum resistance type temperature detectors shall be provided in each phase stator winding. Each bearing of HT motor shall be provided with dial type thermometer and 2 numbers duplex platinum resistance type temperature detectors.

CLAUSE NO.	TECHNICAL REQUIREMENTS
7.08.00	Motor body shall have two earthing points on opposite sides.
7.09.00	11 KV motors shall be offered with Separable Insulated Connector (SIC) as per IEEE 386. The offered SIC terminations shall be provided with protective cover and trifurcating sleeves. SIC termination kit shall be suitable for fault level of 25 KA for 0.17 seconds.
7.10.00	3.3 KV motors shall be offered with dust tight phase separated double walled (metallic as well as insulated barrier) Terminal box. Suitable termination kit shall be provided for the offered Terminal box. The offered Terminal Box shall be suitable for fault level of 250 MVA for 0.12 sec. Removable gland plates of thickness 3 mm (hot/cold rolled sheet steel) or 4 mm (non-magnetic material for single core cables) shall be provided.
7.11.00	The spacing between gland plate & center of bottom terminal stud shall be as per Table-I.
7.12.00	All motors shall be so designed that maximum inrush currents and locked rotor and pullout torque developed by them at extreme voltage and frequency variations do not endanger the motor and driven equipment.
7.13.00	The motors shall be suitable for bus transfer schemes provided on the 11kV, 3.3 kV /415V systems without any injurious effect on its life.
7.14.00	For motors rated 2000 KW & above, neutral current transformers of PS class shall be provided on each phase in a separate neutral terminal box.
7.15.00	The size and number of cables (for HT and LT motors) to be intimated to the successful bidder during detailed engineering and the contractor shall provide terminal box suitable for the same.
8.00.00	The ratio of locked rotor KVA at rated voltage to rated KW shall not exceed the following (without any further tolerance) except for BFP motor. (a) From 50KW & upto 110KW : 11.0 (b) From 110 KW & upto 200 KW : 9.0 (c) Above 200 KW & upto 1000KW : 10.0 (d) From 1001KW & upto 4000KW : 9.0 (e) Above 4000KW : 6 to 6.5
9.00.00	CW motor shall be designed with minimum power factor of 0.8 at design duty point.
10.00.00	**TYPE TEST**
10.01.00	**HT MOTORS**
10.01.01	The contractor shall carry out the type tests as listed in this specification on the equipment to be supplied under this contract. The bidder shall indicate the charges for each of these type

tests separately in the relevant schedule of Section - VII- (BPS) and the same shall be considered for the evaluation of the bids. The type tests charges shall be paid only for the test(s) actually conducted successfully under this contract and upon certification by the employer's engineer.

10.01.02 The type tests shall be carried out in presence of the employer's representative, for which minimum 15 days notice shall be given by the contractor. The contractor shall obtain the employer's approval for the type test procedure before conducting the type test. The type test procedure shall clearly specify the test set–up, instruments to be used, procedure, acceptance norms, recording of different parameters, interval of recording, precautions to be taken etc. for the type test(s) to be carried out.

10.01.03 In case the contractor has conducted such specified type test(s) within last ten years as on the date of bid opening, he may submit during detailed engineering the type test reports to the employer for waival of conductance of such test(s). These reports should be for the tests conducted on the equipment similar to those proposed to be supplied under this contract and test(s) should have been either conducted at an independent laboratory or should have been witnessed by a client. The employer reserves the right to waive conducting of any or all the specified type test(s) under this contract. In case type tests are waived, the type test charges shall not be payable to the contractor.

10.01.04 Further the Contractor shall only submit the reports of the type tests as listed in "LIST OF TESTS FOR WHICH REPORTS HAVE TO BE SUBMITTED "and carried out within last ten years from the date of bid opening. These reports should be for the test conducted on the equipment similar to those proposed to be supplied under this contract and the test(s) should have been either conducted at an independent laboratory or should have been witnessed by a client. However if the contractor is not able to submit report of the type test(s) conducted within last ten years from the date of bid opening, or in the case of type test report(s) are not found to be meeting the specification requirements, the contractor shall conduct all such tests under this contract at no additional cost to the employer either at third party lab or in presence of client/ employer's representative and submit the reports for approval.

10.01.05 **LIST OF TYPE TESTS TO BE CONDUCTED**

The following type tests shall be conducted on each type and rating of HT motor

(a) No load saturation and loss curves upto approximately 115% of rated voltage.

(b) Measurement of noise at no load.

(c) Momentary excess torque test (subject to test bed constraint).

(d) Full load test (subject to test bed constraint)

(e) Temperature rise test at rated conditions. During heat run test, bearing temp., winding temp., coolant flow and its temp. shall also be measured. In case the temperature rise test is carried at load other than rated load, specific approval for the

test method and procedure is required to be obtained. Wherever ETD's are provided, the temperature shall be measured by ETD's also for the record purpose.

10.01.06 **LIST OF TESTS FOR WHICH REPORTS HAVE TO BE SUBMITTED**

The following type test reports shall be submitted for each type and rating of HT motor

(a) Degree of protection test for the enclosure followed by IR, HV and no load run test.

(b) Terminal box-fault level withstand test for each type of terminal box of HT motors only.

(c) Lightning Impulse withstand test on the sample coil shall be as per clause no. 4.3 IEC-60034, part-15

(d) Surge-withstand test on interturn insulation shall be as per clause no. 4.2 of IEC 60034, part-15

10.02.00 **LT Motors**

10.02.01 LT Motors supplied shall be of type tested design. During detailed engineering, the contractor shall submit for employer's approval the reports of all the type tests as listed in this specification and carried out within last *ten* years from the date of bid opening. These reports should be for the test conducted on the equipment similar to those proposed to be supplied under this contract and the test(s) should have been either conducted at an independent laboratory or should have been witnessed by a client.

10.02.02 However if the contractor is not able to submit report of the type test(s) conducted within last ten years from the date of bid opening, or in the case of type test report(s) are not found to be meeting the specification requirements, the contractor shall conduct all such tests under this contract at no additional cost to the employer either at third party lab or in presence of client/ employer's representative and submit the reports for approval.

10.02.03 **LIST OF TESTS FOR WHICH REPORTS HAVE TO BE SUBMITTED**

The following type test reports shall be submitted for each type and rating of LT motor of above 100 KW only

1. Measurement of resistance of windings of stator and wound rotor.
2. No load test at rated voltage to determine input current power and speed
3. Open circuit voltage ratio of wound rotor motors (in case of Slip ring motors)
4. Full load test to determine efficiency power factor and slip.
5. Temperature rise test.
6. Momentary excess torque test.

7. High voltage test.

8. Test for vibration severity of motor.

9. Test for noise levels of motor(Shall be limited as per clause no 7.06.00 of this section)

10. Test for degree of protection and

11. Over speed test.

12. Type test reports for motors located in fuel oil area having flame proof enclosures as per IS 2148 / IEC 60079-1

10.03.00 All acceptance and routine tests as per the specification and relevant standards shall be carried out. Charges for these shall be deemed to be included in the equipment price.

10.04.00 The type test reports once approved for any projects shall be treated as reference. For subsequent projects of NTPC, an endorsement sheet will be furnished by the manufacturer confirming similarity and "No design Change". Minor changes if any shall be highlighted on the endorsement sheet.

TABLE - I

DIMENSIONS OF TERMINAL BOXES FOR LV MOTORS

Motor MCR in KW	**Minimum distance between centre of bottom terminal stud and gland plate in mm**
UP to 3 KW	**As per manufacturer's practice.**
Above 3 KW - upto 7 KW	85
Above 7 KW - upto 13 KW	115
Above 13 KW - upto 24 KW	167
Above 24 KW - upto 37 KW	196
Above 37 KW - upto 55 KW	249
Above 55 KW - upto 90 KW	277
Above 90 KW - upto 125 KW	331
Above 125 KW-upto 200 KW	385/203 (For Single core cables only)

For HT motors the distance between gland plate and the terminal studs shall not be less than 500 mm.

PHASE TO PHASE/ PHASE TO EARTH AIR CLEARANCE:

NOTE: Minimum inter-phase and phase-earth air clearances for LT motors with lugs installed shall be as follows:

Motor MCR in KW	**Clearance**
UP to 110 KW	10mm
Above 110 KW and upto 150 KW	12.5mm
Above 150 KW	19mm

SUB–SECTION – B-3

LT POWER CABLES

(AS PER APPLICABILITY OF SCOPE DEFINED IN SECTION IA & STANDARD ELECTRICAL SCOPE BETWEEN BHEL AND VENDOR IN SECTION IB)

KHURJA SUPER THERMAL POWER PROJECT (2X660 MW) TURBINE GENERATOR AND ASSOCIATED PACKAGES BID DOC. NO.: THDC/RKSH/CC-9915-371	SEPARATOR

CLAUSE NO.	TECHNICAL REQUIREMENTS

1.00.00 CODES & STANDARDS

1.01.00 All standards, specifications and codes of practice referred to herein shall be the latest editions including all applicable official amendments and revisions as on date of opening of bid. In case of conflict between this specification and those (IS : codes, standards, etc.) referred to herein, the former shall prevail. All the cables shall conform to the requirements of the following standards and codes:

IS :1554 - I	PVC insulated (heavy duty) electric cables for working voltages upto and including 1100V.
IS : 3961	Recommended current ratings for cables
IS : 3975	Low carbon galvanised steel wires, formed wires and tapes for armouring of cables.
IS : 5831	PVC insulation and sheath of electrical cables.
IS:7098 (Part -I)	Cross linked polyethylene insulated PVC sheathed cables for working voltages upto and including 1100V.
IS : 8130	Conductors for insulated electrical cables and flexible cords.
IS : 10418	Specification for drums for electric cables.
IS : 10810	Methods of tests for cables.
ASTM-D -2843	Standard test method for density of smoke from the burning or decomposition of plastics.
IEC-754 (Part-I)	Tests on gases evolved during combustion of electric cables.
IEC-332	Tests on electric cables under fire conditions. Part-3: Tests on bunched wires or cables (Category-B).

2.00.00 TECHNICAL REQUIREMENTS

2.01.00 The cables shall be suitable for laying on racks, in ducts, trenches, conduits and under ground buried installation with chances of flooding by water.

CLAUSE NO.	TECHNICAL REQUIREMENTS
2.02.00	All cables including EPR cables shall be flame retardant, low smoke (FRLS) type designed to withstand all mechanical, electrical and thermal stresses developed under steady state and transient operating conditions as specified elsewhere in this specification.
2.03.00	Aluminium conductor used in power cables shall have tensile strength of more than 100 N/ sq.mm. Conductors shall be stranded.
2.04.00	XLPE insulation shall be suitable for a continuous conductor temperature of 90 deg. C and short circuit conductor temperature of 250 deg C. PVC insulation shall be suitable for continuous conductor temperature of 70 deg C and short circuit conductor temperature of 160 deg. C.
2.05.00	The cable cores shall be laid up with fillers between the cores wherever necessary. It shall not stick to insulation and inner sheath. All the cables, other than single core unarmoured cables, shall have distinct extruded PVC inner sheath of black colour as per IS : 5831.
2.06.00	For single core armoured cables, armouring shall be of aluminium wires/ formed wires. For multicore armoured cables, armouring shall be of galvanised steel as follows :

Calculated nominal dia. of cable under armour	Size and Type of armour
Upto 13 mm	1.4mm dia GS wire
Above 13 & upto 25mm	0.8 mm thick GS formed wire / 1.6 mm dia GS wire
Above 25 & upto 40 mm	0.8mm thick GS formed wire / 2.0mm dia GS wire
Above 40 & upto 55mm	1.4 mm thick GS formed wire /2.5mm dia GS wire
Above 55 & upto 70 mm	1.4mm thick GS formed wire / 3.15mm dia GS wire
Above 70mm	1.4 mm thick GS formed wire / 4.0 mm dia GS wire

2.06.01 The aluminium used for armouring shall be of H4 grade as per IS: 8130 with maximum resistivity of 0.028264 ohm mm^2 per meter at 20 deg C. The sizes of aluminium armouring shall be same as indicated above for galvanized steel.

2.06.02 The gap between armour wires / formed wires shall not exceed one armour wire / formed wire space and there shall be no cross over / over-riding of armour wire / formed wire. The minimum area of coverage of armouring shall be 90%. The breaking load of armour joint shall not be less than 95% of that of armour wire / formed wire. Zinc rich paint shall be applied on armour joint surface of G.S.wire/ formed wire.

2.07.00 Outer sheath shall be of PVC as per IS: 5831 & black in colour. In addition to meeting all the requirements of Indian standards referred to, outer sheath of all the cables shall have the following FRLS properties.

(a.) Oxygen index of min. 29 (as per IS 10810 Part-58).

(b.) Acid gas emission of max. 20% (as per IEC-754-I).

(c.) Smoke density rating shall not be more than 60 % (as per ASTMD-2843).

2.08.00 Cores of the cables shall be identified by colouring of insulation. Following colour scheme shall be adopted:

1 core - Red, Black, Yellow or Blue

2 core - Red & Black

3 core - Red, Yellow & Blue

4 core - Red, Yellow, Blue and Black

2.09.00 For reduced neutral conductors, the core shall be black.

2.10.00 In addition to manufacturer's identification on cables as per IS, following marking shall also be provided over outer sheath.

(a.) Cable size and voltage grade - To be embossed

(b.) Word 'FRLS' at every 5 metre - To be embossed

(c.) Sequential marking of length of the cable in metres at every one metre -To be embossed / printed

The embossing shall be progressive, automatic, in line and marking shall be legible and indelible. For EPR cables identification shall be printed on outer sheath.

2.11.00 All cables shall meet the fire resistance requirement as per Category-B of IEC 332 Part-3.

2.12.00 Allowable tolerances on the overall diameter of the cables shall be +\-2 mm maximum, over the declared value in the technical data sheets.

2.13.00 In plant repairs to the cables shall not be accepted. Pimples, fish eye, blow holes etc. are not acceptable.

2.14.00 Cable selection & sizing

2.14.01 Cables shall be sized based on the following considerations:

(a) Rated current of the equipment

(b) The voltage drop in the cable, during motor starting condition, shall be limited to 10% and during full load running condition, shall be limited to 3% of the rated voltage

(c) Short circuit withstand capability

This will depend on the feeder type. For a fuse protected circuit, cable should be sized to withstand the letout energy of the fuse. For breaker controlled feeder, cable shall be capable of withstanding the system fault current level for total breaker tripping time inclusive of relay pickup time.

2.14.02 Derating Factors

Derating factors for various conditions of installations including the following shall be considered while selecting the cable sizes:

a) Variation in ambient temperature for cables laid in air

b) Grouping of cables

c) Variation in ground temperature and soil resistivity for buried cables.

2.14.03 Cable lengths shall be considered in such a way that straight through cable joints are avoided.

2.14.04 All Cables shall be armoured type.

2.14.05 All LT power cables of sizes more than 120 sq.mm. shall be XLPE insulated and sizes shall be 1Cx150, 1Cx300, 1Cx630, 3Cx150 & 3Cx240 sq.mm. However for cable sizes upto 120 sq.mm. both XLPE insulated & PVC insulated LT power cables are acceptable.

2.14.06 Same cable sizes to be used for same type of application & rating of motor i.e if there are three pumps for one application, all three pumps motor should be provided with same cables sizes.

3.00.00 CONSTRUCTIONAL FEATURES

3.01.00 1.1 KV Grade Power Cables

(a) 1.1 KV grade XLPE power cables shall have compacted aluminium conductor, XLPE insulated, PVC inner-sheathed (as applicable), armoured, PVC outer-sheathed conforming to IS:7098. (Part-I).

(b) 1.1KV grade PVC power cables shall have aluminium conductor(compacted type for sizes above 10 sq.mm), PVC Insulated, PVC inner sheathed (as applicable) armoured, PVC outer-sheathed conforming to IS:1554 (Part-I).

(c) 1.1 KV grade Trailing cables shall have tinned copper(class 5)conductor, insulated with heat resistant elastomeric compound based on Ethylene Propyline Rubber(EPR) suitable for withstanding 90 deg.C continuous conductor temperature and 250deg C during short circuit, inner-sheathed with heat resistant elastomeric compound, nylon cord reinforced, outer-sheathed with heat resistant, oil resistant and flame retardant heavy duty elastomeric compound conforming to IS 9968.

4.00.00 CABLE DRUMS

(a) Cables shall be supplied in non returnable wooden or steel drums of heavy construction. The surface of the drum and the outer most cable layer shall be covered with water proof cover. Both the ends of the cables shall be properly sealed with heat shrinkable PVC/ rubber caps secured by 'U' nails so as to eliminate ingress of water during transportation, storage and erection. Wood preservative anti-termite treatment shall be applied to the entire drum. Wooden drums shall comply with IS: 10418.

(b) Each drum shall carry manufacturer's name, purchaser's name, address and contract number, item number and type, size and length of cable and net gross weight stencilled on both sides of the drum. A tag containing same information shall be attached to the leading end of the cable. An arrow and suitable accompanying wording shall be marked on one end of the reel indicating the direction in which it should be rolled.

(c.) The standard drum length of LT power cable with a maximum tolerance of +/- 5% may be decided by the bidder subject to condition that there shall not be any joint in cable, where application length of cable is up to & including 1000 meter for single core cable excluding 630 sqmm size, and 750 meter for multicore cable & single core 630 sqmm

5.00.00 TESTS

1.0 All equipments to be supplied shall be of type tested design. During detailed engineering, the contractor shall submit for Owner's approval the reports of all the type tests as listed in this specification and carried out within last ten years from the date of bid opening. These reports should be for the test conducted on the equipment similar to those proposed to be supplied under this contract and the test(s) should have been either conducted at an independent laboratory or should have been witnessed by a client.

2.0 However if the contractor is not able to submit report of the type test(s) conducted within last ten years from the date of bid opening, or in the case of type test report(s) are not found to be meeting the specification requirements, the contractor shall conduct all such tests under this contract at no additional cost to the owner either at third party lab or in presence of client /owners representative and submit the reports for approval.

3.0 All acceptance and routine tests as per the specification and relevant standards shall be carried out. Charges for these shall be deemed to be included in the equipment price.

4.0 The type test reports once approved for any projects shall be treated as reference. For subsequent projects of NTPC, an endorsement sheet will be furnished by the manufacturer confirming similarity and "No design Change". Minor changes if any shall be highlighted on the endorsement sheet.

5.01.00 **Type Tests**

5.01.01 The reports for the following type tests shall be submitted for one size each of LT XLPE and LT PVC Power cables. Size shall be decided by the employer during detailed engineering:

S.No.	Type test	Remarks
	For Conductor	
1.	Resistance test	
2.	Tensile test	For circular non-compacted conductors only
3.	Wrapping test	For circular non-compacted only

	For Armour Wires/ Formed Wires	
4.	Measurement of Dimensions	
5.	Tensile Test	
6.	Elongation test	
7.	Torsion test	For round wires only
8.	Wrapping test	For aluminium wires / formed wires only.
9.	Resistance test	
10(a)	Mass of zinc coating test	For GS Formed wires/wires only
10(b)	Uniformity of zinc coating	For GS Formed wires /wires only
11.	Adhesion test	For GS Formed wires/wires only
	For PVC/XLPE insulation & PVC Sheath	
12.	Test for thickness	
13.	Tensile strength & elongation tests	before ageing and after ageing
14.	Ageing in air oven	
15.	Loss of mass test	For PVC insulation and sheath only
16.	Hot deformation test	For PVC insulation and sheath only
17.	Heat shock test	For PVC insulation and sheath only
18.	Shrinkage test	
19.	Thermal stability test	For PVC insulation and sheath only
20.	Hot set test	For XLPE insulation only
21.	Water absorption test	For XLPE insulation only
22.	Oxygen index test	For outer sheath only
23.	Smoke density test	For outer sheath only
24.	Acid gas generation test	For outer sheath only
	For completed cables	
25.	Insulation resistance test (Volume resistivity method)	
26.	High voltage test	
27.	Flammability test as per IEC-332 Part-3 (Category-B)	

Indicative list of tests/checks, Routine and Acceptance tests shall be as per Quality Assurance & Inspection table of LT power cables enclosed.

SUB–SECTION – B-4

LT CONTROL CABLES

(AS PER APPLICABILITY OF SCOPE DEFINED IN SECTION IA & STANDARD ELECTRICAL SCOPE BETWEEN BHEL AND VENDOR IN SECTION IB)

KHURJA SUPER THERMAL POWER PROJECT (2X660 MW) TURBINE GENERATOR AND ASSOCIATED PACKAGES BID DOC. NO.: THDC/RKSH/CC-9915-371	SEPARATOR

CLAUSE NO.	TECHNICAL REQUIREMENTS

1.00.00 CODES & STANDARDS

1.01.00 All standards, specifications and codes of practice referred to herein shall be the latest editions including all applicable official amendments and revisions as on date of opening of bid. In case of conflict between this specification and those (IS : codes, standards, etc.) referred to herein, the former shall prevail. All the cables shall conform to the requirements of the following standards and codes:

IS :1554 - I	PVC insulated (heavy duty) electric cables for working voltages upto and including 1100V.
IS : 3961	Recommended current ratings for cables
IS : 3975	Low carbon galvanised steel wires, formed wires and tapes for armouring of cables.
IS : 5831	PVC insulation and sheath of electrical cables.
IS : 8130	Conductors for insulated electrical cables and flexible cords.
IS : 10418	Specification for drums for electric cables.
IS : 10810	Methods of tests for cables.
ASTM-D –2843	Standard test method for density of smoke from the burning or decomposition of plastics.
IEC-754 (Part-I)	Tests on gases evolved during combustion of electric cables.
IEC-332	Tests on electric cables under fire conditions. Part-3: Tests on bunched wires or cables (Category-B).

2.00.00 TECHNICAL REQUIREMENTS

2.01.00 The cables shall be suitable for laying on racks, in ducts, trenches, conduits and under ground buried installation with chances of flooding by water.

2.02.00 All cables including EPR cables shall be flame retardant, low smoke (FRLS) type designed to withstand all mechanical, electrical and thermal stresses develop under steady state and transient operating conditions as specified elsewhere in this specification.

2.03.00 Conductor of control cables shall be made of stranded, plain annealed copper.

2.04.00 PVC insulation shall be suitable for continuous conductor temperature of 70 deg C and short circuit conductor temperature of 160 deg. C.

2.05.00 The cable cores shall be laid up with fillers between the cores wherever necessary. It shall not stick to insulation and inner sheath. All the cables, other than single core unarmoured cables, shall have distinct extruded PVC inner sheath of black colour as per IS: 5831.

CLAUSE NO.	TECHNICAL REQUIREMENTS

2.06.00 For multicore armoured cables, the armouring shall be of galvanised steel as follows:

Calculated nominal dia of cable under armour	Size and Type of armour
Upto 13 mm	1.4mm dia GS wire
Above 13 upto 25 mm	0.8 mm thick GS formed wire / 1.6 mm dia GS wire
Above 25 upto 40 mm	0.8mm thick GS formed wire / 2.0mm dia GS wire
Above 40 upto 55mm	1.4 mm thick GS formed wire/2.5mm dia GS wire
Above 55 upto 70 mm	1.4mm thick GS formed wire / 3.15mm dia GS wire
Above 70mm	1.4 mm thick GS formed wire / 4.0 mm dia GS wire

The gap between armour wires / formed wires shall not exceed one armour wire / formed wire space and there shall be no cross over / over-riding of armour wire / formed wire. The minimum area of coverage of armouring shall be 90%. The breaking load of armour joint shall not be less than 95% of that of armour wire / formed wire. Zinc rich paint shall be applied on armour joint surface.

2.07.00 Outer sheath shall be of PVC as per IS: 5831 and grey in colour. In addition to meeting all the requirements of Indian Standards referred to, outer sheath of all the cables shall have the following FRLS properties.

(a.) Oxygen index of min. 29. (As per IS 10810 Part-58)

(b.) Acid gas emission of max. 20% (As per IEC-754-I)

(c.) Smoke density rating shall not be more than 60% during Smoke Density Test as per ASTMD-2843.

2.08.00 Cores of the cables of upto 5 cores shall be identified by colouring of insulation. Following colour scheme shall be adopted.

1 core - Red, Black, Yellow or Blue

2 core - Red & Black

3 core - Red, Yellow & Blue

4 core - Red, Yellow, Blue and Black

5 core - Red, Yellow, Blue, Black and Grey

2.09.00 For cables having more than 5 cores, core identification shall be done by numbering the insulation of cores sequentially, starting by number 1 in the inner layer (e.g. say for 10 core cable, core numbering shall be from 1 to 10). The number shall be printed in Hindu-Arabic numerals on the outer surfaces of the cores. All the numbers shall be of the same colour, which shall contrast with the colour of insulation. The colour of insulation for all the cores shall be grey only. The numerals shall be legible and indelible. The numbers shall be repeated at regular intervals along the core, consecutive numbers being inverted in relation to each other. When the number is a single numeral, a dash shall be placed

underneath it. If the number consists of two numerals, these shall be disposed one below the other and a dash placed below the lower numeral. The spacing between consecutive numbers shall not exceed 50 mm.

2.10.00 In addition to manufacturer's identification on cables as per IS, following marking shall also be provided over outer sheath:

(a.) Cable size and voltage grade - To be embossed

(b.) Word 'FRLS' at every 5 metre - To be embossed

(c.) Sequential marking of length of the cable in metres at every one metre - To be embossed / printed.

The embossing / printing shall be progressive, automatic, in line and marking shall be legible and indelible. For EPR cables identification shall be printed on outer sheath.

2.11.00 All cables shall meet the fire resistance requirement as per Category-B of IEC-332 Part-3.

2.12.00 Allowable tolerances on the overall diameter of the cables shall be +\-2 mm maximum over the declared value in the technical data sheets.

2.13.00 In plant repairs to the cables shall not be accepted. Pimples, fish eye, blow holes etc. are not acceptable.

2.14.00 Cable selection & sizing

Control cables shall be sized based on the following considerations:

(a) The minimum conductor cross-section shall be 1.5 sq.mm.

(b) The minimum number of spare cores in control cables shall be as follows:

No. of cores in cable	Min. No. of spare cores
2C, 3C	NIL
5C	1
7C-12C	2
14C & above	3

2.14.01 Cable lengths shall be considered in such a way that straight through cable joints are avoided.

2.14.02 All Cables shall be armoured type.

3.00.00 CONSTRUCTIONAL FEATURES

3.01.00 1.1 KV Grade Control Cables shall have stranded copper conductor and shall be multicore PVC insulated, PVC inner sheathed, armoured / unarmoured, FRLS PVC outer sheathed conforming to IS: 1554. (Part-I).

3.02.00 1.1 KV grade Trailing cables shall have tinned copper(class 5)conductor, insulated with heat resistant elastomeric compound based on Ethylene Propyline Rubber(EPR) suitable for withstanding 90 deg.C continuous conductor temperature and 250deg C during short circuit, inner-sheathed with heat resistant elastomeric compound, nylon cord reinforced, outer-

sheathed with heat resistant, oil resistant and flame retardant heavy duty elastomeric compound conforming to IS 9968. Minimum conductor size shall be 2.5 sqmm.

4.00.00 CABLE DRUMS

(a.) Cables shall be supplied in non returnable wooden or steel drums of heavy construction. The surface of the drum and the outer most cable layer shall be covered with water proof cover. Both the ends of the cables shall be properly sealed with heat shrinkable PVC/ rubber caps secured by 'U' nails so as to eliminate ingress of water during transportation, storage and erection. Wood preservative anti-termite treatment shall be applied to the entire drum. Wooden drums shall comply with IS: 10418.

(b.) Each drum shall carry manufacturer's name, purchaser's name, address and contract number, item number and type, size and length of cable and net gross weight stenciled on both the sides of the drum. A tag containing same information shall be attached to the leading end of the cable. An arrow and suitable accompanying wording shall be marked on one end of the reel indicating the direction in which it should be rolled.

(c.) The standard drum length for control cables with a maximum tolerance of +/- 5% may be decided by the bidder subject to condition that there shall not be any joint in cable, where application length of cable is up to & including 1000 meter.

5.00.00 TESTS

All equipments to be supplied shall be of type tested design. During detailed engineering, the contractor shall submit for Owner's approval the reports of all the type tests as listed in this specification and carried out within last ten years from the date of bid opening. These reports should be for the test conducted on the equipment similar to those proposed to be supplied under this contract and the test(s) should have been either conducted at an independent laboratory or should have been witnessed by a client.

However if the contractor is not able to submit report of the type test(s) conducted within last ten years from the date of bid opening, or in the case of type test report(s) are not found to be meeting the specification requirements, the contractor shall conduct all such tests under this contract at no additional cost to the owner either at third party lab or in presence of client /owners representative and submit the reports for approval.

All acceptance and routine tests as per the specification and relevant standards shall be carried out. Charges for these shall be deemed to be included in the equipment price

The type test reports once approved for any projects shall be treated as reference. For subsequent projects of NTPC, an endorsement sheet will be furnished by the manufacturer confirming similarity and "No design Change". Minor changes if any shall be highlighted on the endorsement sheet.

5.01.00 **TYPE TESTS**

5.01.01 The reports for the following type tests shall be submitted for one size of control cables. Size shall be decided by the employer during detailed engineering

CLAUSE NO.	TECHNICAL REQUIREMENTS

S. No.	Type Test	Remarks
	For Conductor	
1.	Resistance test	
	For Armour Wires / Formed Wires (If applicable)	
2.	Measurement of Dimensions	
3.	Tensile Test	
4.	Elongation test	
5.	Torsion test	For round wire only
6.	Wrapping test	For aluminium wires / formed wires only.
7.	Resistance test	
8(a).	Mass of zinc Coating test	For GS wires/formed wires only
8(b).	Uniformity of zinc coating	For GS wires/formed wires only
9.	Adhesion test	For GS wires/formed wires only
	For PVC insulation & PVC Sheath	
10.	Test for thickness	
11.	Tensile strength and elongation test	before ageing and after ageing
12.	Ageing in air oven	
13.	Loss of mass test	For PVC insulation and sheath only
14.	Hot deformation test	For PVC insulation and sheath only
15.	Heat shock test	For PVC insulation and sheath only
16.	Shrinkage test	
17.	Thermal stability test	For PVC insulation and sheath only
18.	Oxygen index test	For outer sheath only

CLAUSE NO.	TECHNICAL REQUIREMENTS

S. No.	Type Test	Remarks
19.	Smoke density test	For outer sheath only
20.	Acid gas generation test	For outer sheath only
	For completed cables	
21.	Insulation resistance test(Volume resistivity method)	
22.	High voltage test	
23.	Flammability test as per IEC-332 Part-3 (Category-B)	

5.02.00 Indicative list of tests/checks, Routine and Acceptance tests shall be as per Quality Assurance & Inspection table of Control Cables enclosed.

SUB–SECTION – B-5

CABLING EARTHING LIGHTNING AND PROTECTION

(AS PER APPLICABILITY OF SCOPE DEFINED IN SECTION IA & STANDARD ELECTRICAL SCOPE BETWEEN BHEL AND VENDOR IN SECTION IB)

KHURJA SUPER THERMAL POWER PROJECT (2X660 MW) TURBINE GENERATOR AND ASSOCIATED PACKAGES BID DOC. NO.: THDC/RKSH/CC-9915-371	SEPARATOR

CLAUSE NO.	TECHNICAL REQUIREMENTS
1.00.00	**CODES AND STANDARDS**
1.01.00	All standards, specifications and codes of practice referred to herein shall be the latest editions including all applicable official amendments and revisions as on date of opening of bid. In case of conflict between this specification and those (IS codes, standards, etc.) referred to herein, the former shall prevail. All work shall be carried out as per the following standards/ codes as applicable .

IS:513	Cold rolled low carbon steel sheets and strips.
IS:802	Code of practice for the use of Structural Steel in Overhead Transmission Line Towers.
IS:1079	Hot Rolled carbon steel sheet & strips
IS:1239	Mild steel tubes, tubulars and other wrought steel fittings
IS:1255	Code of practice for installation and maintenance of power cables upto and including 33 KV rating
IS:1367 Part-13	Technical supply conditions for threaded Steel fasteners. (Hot dip galvanized coatings on threaded fasteners).
IS:2147	Degree of protection provided by enclosures for low voltage switchgear and control gear
IEC:62305	Code of Practice for the protection of building and allied structures against lightning.
IS:2309	Code of Practice for the protection of building and allied structures against lightning.
IS:2629	Recommended practice for hot dip galvanising of iron & steel
IS:2633	Method for testing uniformity of coating on zinc coated articles.
IS:3043	Code of practice for Earthing
IS:3063	Fasteners single coil rectangular section spring washers.
IS:6745	Methods for determination of mass of zinc coating on zinc coated iron & steel articles.
IS:8308	Compression type tubular in- line connectors for aluminium conductors of insulated cables
IS:8309	Compression type tubular terminal ends for aluminium conductors of insulated cables.
IS:9537	Conduits for electrical installation.
IS:9595	Metal - arc welding of carbon and carbon manganese steels - recommendations.
IS:13573	Joints and terminations for polymeric cables.
BS:476	Fire tests on building materials and structures

	IEEE:80	IEEE guide for safety in AC substation grounding
	IEEE:142	Grounding of Industrial & commercial power systems
	DIN 46267 (Part-II)	Non tension proof compression joints for Aluminium conductors.
	DIN 46329	Cable lugs for compression connections, ring type ,for Aluminium conductors
	BS:6121	Specification for mechanical Cable glands for elastomers and plastic insulated cables.
		Indian Electricity Act.
		Indian Electricity Rules.

1.02.00 Equipment complying with other internationally accepted standards such as IEC, BS, DIN, USA, VDE, NEMA etc. will also be considered if they ensure performance and constructional features equivalent or superior to standards listed above. In such a case, the Bidder shall clearly indicate the standard(s) adopted, furnish a copy in English of the latest revision of the standards alongwith copies of all official amendments and revisions in force as on date of opening of bid and shall clearly bring out the salient features for comparison.

2.00.00 DESIGN AND CONSTRUCTIONAL FEATURE

2.01.00 **Inter Plant Cabling**

2.01.01 Interplant cabling for main routes shall be laid along overhead trestles/duct banks. Cables from main plant to switchyard control room shall be laid in overhead trestles or duct bank. In case of Duct banks, pull-pits shall be filled with sand and provided with a PCC covering. Directly buried cables, if essential, shall not have concentration of more than 4 cables in one route. All HT, LT and Control cables shall be armored.

2.01.02 **Transformer yard**

In transformer yard cables shall be laid in overhead trestle. The main cable routes coming out from Main plant building and crossing the Transformer yard shall be laid in overhead trestles. In transformer yard, trestle height for rail/road crossing shall be suitable for movement of Generator Transformer with bushing.

2.01.03 **Trenches**

PCC flooring of built up trenches shall be sloped for effective drainage with sump pits and sump pumps.

2.01.04 No sub zero level cable vault/trenches shall be provided below control building/switchgear rooms in main plant.

2.01.05 **Cable Vault**

The cable vault/ / cable spreader room space below the HT / LT switchgear room, Control Rooms, unit control equipment room, Programmer room, UPS, Charger & Battery Rooms, Boiler MCC room shall have **800 mm wide** and 2.1 m high movement passage all around the cable trays in the cable vault/ cable spreader room for easy laying/maintenance of cables

Cable vaults shall be provided with adequate drainage facilities for drainage of fire water.

Each cable vault should have at least two doors.

Exit signs shall be provided near doors for personnel escape in case of emergency

2.01.06 **Boiler Area**

Two separate cable routes one on each side shall be provided for each boiler unit. Cables for on set of auxiliaries such as ID, FD, PA fan & half of the coal mills shall be routed in one route & for other set of auxiliaries through other route.

Cable trays in boiler & ESP area shall be supported from the boiler and ESP structures. The same shall be coordinated with SG/ESP contractor.

Cable trays in these areas shall be in vertical formation to avoid dust accumulation. No cable trenches shall be provided in boiler/ESP area.

2.01.07 **Turbine Hall Area**

a)Two separate cable routes shall be provided for cable routing of working and standby drives or different set/group (say 50% capacity) of auxiliaries.

2.01.08 **OffSite Area**

In offsite pumphouses, overhead cable tray arrangement shall be followed. However cable trenches may be considered below switchgear/mcc.
Trestle In fuel oil pump house, overhead cable tray arrangement shall be provided. RCC trenches provided in MCC room shall be separated from fuel oil area to avoid oil accumulation.

2.01.09 The cable slits to be used for motor/equipment power/control supply shall be sand filled & covered with PCC after cabling.

2.01.10 Sizing criteria, derating factors for the cables shall be met as per respective chapters. However for the power cables, the minimum conductor size shall be 6 sq.mm. for aluminium conductor and 2.5 sq.mm. for copper conductor cable.

2.01.11 Conscious exceptions to the above guidelines may be accepted under special conditions but suitable measures should be taken at such location to:

- Meet all safety requirements
- Safeguard against fire hazards, mechanical damage, flooding of water, oil accumulation, electrical faults/interferences, etc

3.00.00 EQUIPMENT DESCRIPTION

3.01.00 **Cable trays, Fittings & Accessories**

3.01.01 Cable trays shall be ladder/perforated type as specified complete with matching fittings (like brackets, elbows, bends, reducers, tees, crosses, etc.) accessories (like side coupler plates, etc. and hardware (like bolts, nuts, washers, G.I. strap, hook etc.) as required. Cable tray shall be ladder type for power & control cables and perforated for instrumentation cables.

3.01.02 Cable trays, fittings and accessories shall be fabricated out of rolled mild steel sheets free from flaws such as laminations, rolling marks, pitting etc. These (including hardware) shall be hot dip galvanized as per Clause No. 3.13.00 of this chapter.

CLAUSE NO.	TECHNICAL REQUIREMENTS
3.01.03	Cable trays shall have standard width of 150 mm, 300 mm & 600 mm and standard lengths of 2.5 metre. Thickness of mild steel sheets used for fabrication of cable trays and fittings shall be 2 mm. The thickness of side coupler plates shall be 3 mm.
3.01.04	Cable troughs shall be required for branching out few cables from main cable route. These shall be U-shaped, fabricated of mild steel sheets of thickness 2 mm and shall be hot dip galvanised as per Clause No. 3.13.00 of this chapter. Troughs shall be standard width of 50 mm & 75 mm with depth of 25 mm.
3.01.05	The tolerance for cable tray and accessories shall be as per IS 2102 (Part-1). Tolerance Class: - Coarse
3.02.00	**Support System for Cable Trays**
3.02.01	Cable tray support system shall be pre-fabricated out of single sheet as per enclosed tender drawings.
3.02.02	Support system for cable trays shall essentially comprise of the two components i.e. main support channel and cantilever arms. The main support channel shall be of two types : (i) C1:- having provision of supporting cable trays on one side and (ii) C2:-having provision of supporting cable trays on both sides. The support system shall be the type described hereunder a. Cable supporting steel work for cable racks/cables shall comprise of various channel sections, cantilever arms, various brackets, clamps, floor plates, all hardwares such as lock washers, hexagon nuts, hexagon head bolt, support hooks, stud nuts, hexagon head screw, channel nut, channel nut with springs, fixing studs, etc. b. The system shall be designed such that it allows easy assembly at site by using bolting. All cable supporting steel work, hardwares fitings and accessories shall be prefabricated factory galvanised. c. The main support and cantilever arms shall be fixed at site using necessary brackets, clamps, fittings, bolts, nuts and other hardware etc. to form various arrangements required to support the cable trays. Welding of the components shall not be allowed. However, welding of the bracket (to which the main support channel is bolted) to the overhead beams, structural steel, insert plates or reinforcement bars will be permitted. Any cutting or welding of the galvansied surface shall be brushed and red lead primer, oil primer & aluminium paint shall be applied d. All steel components, accessories, fittings and hardware shall be hot dip galvanised after completing welding, cutting, drilling and other machining operation. e. The typical arrangement of flexible support system is shown in the enclosed drawings and described briefly below: The main support channel and cantilever arms shall be fabricated out of 2.5 thick rolled steel sheet conforming to IS 1079. f. Cantilever arms of 320 mm, 620mm and 750 mm in length are required, and shall be as shown in the enclosed drawing. The arm portion shall be suitable for assembling the complete arm assembly on to component constructed of standard channel section. The back plate shall allow sufficient clearance for fixing bolt to be tightened with tray in position. g. Support system shall be able to withstand

- weight of the cable trays
- weight of the cables (75 Kg/Metre run of each cable tray)
- Concentrated load of 75 Kg between every support span.
- Factor of safety of minimum 1.5 shall be considered.

3.02.03 The size of structural steel members or thickness of sheet steel of main support channel and cantilever arms and other accessories as indicated above or in the enclosed drawings are indicative only. Nevertheless, the support system shall be designed by the bidder to fully meet the requirements of type tests as specified. In case the system fails in the tests, the components design modification shall be done by the Bidder without any additional cost to the Employer. The bidder shall submit the detailed drawings of the system offered by him alongwith the bid.

3.02.04 Four legged structure shall be provided wherever there is change in elevation and change in direction

3.03.04 FOR COAL, LIMESTONE AND GYPSUM HANDLING PLANT THE FOLLOWING SHALL ALSO BE APPLICABLE:

a) All overhead cable routes shall be along the route of the conveyor gallery on separate supporting structures and cables shall be laid in vertical trays. The bottom of the steel shall be such that the existing facilities, movement of trucks/human beings etc. does not get affected. The cable trestle shall have a minimum 600mm clear walk way and shall have maintenance platforms as required. The bottom of the steel supporting structure shall be generally at 3.0M above the grade level except for rail/road crossings where it shall be at 8.0M above grade level. Tap offs from the overhead cable trestle can be through shallow trenches with prior approval of the Employer. Directly buried cable, if essential, shall not have concentration of more than 4 cables on one route.

b) Cable trenches shall be provided only in Switchgear/MCC rooms.

c) Cables shall not be routed through the conveyor galleries except for the equipment located in the conveyor galleries for a particular conveyor i.e. protection switches, receptacles etc.

d) Cables for PCS and BSS shall be routed along the conveyors through GI conduits.

3.04.00 **Pipes, Fittings & Accessories**

3.03.01 Pipes offered shall be complete with fittings and accessories (like tees, elbows, bends, check nuts, bushings, reducers, enlargers, coupling caps, nipples etc.) The size of the pipe shall be selected on the basis of maximum 40% fill criteria

3.03.02 GI Pipes shall be of medium duty as per IS: 1239

3.03.03 Duct banks shall be PVC conduits encased in PCC (10% spare of each size, subject to minimum one) with suitable water-proof manholes and with proper sealing arrangement consisting of fire retardant sealing compound.

3.03.04 Hume pipes shall be NP3 type as per IS 458.

3.03.05 TERNE Coated Flexible Steel Conduits shall be water proof and rust proof made of heat resistant lead coated steel. Conduit diameter shall be uniform throughout its length. Internal surface of the conduit shall be free from burrs and sharp edges. Conduits shall be complete

with necessary accessories for proper termination of the conduit with junction boxes and lighting fixtures.

3.03.06 HDPE pipes and conduits shall be PE-80, PN-10 type as per IS 4984/IS 8008 Part-I.

3.04.00 **Junction Boxes**

3.04.01 Junction box shall be made of Fire retardant material. Material of JB shall be Thermoplastic or thermosetting or FRP type. The box shall be provided with the terminal blocks, mounting bracket and screws etc. The cable entry shall be through galvanized steel conduits of suitable diameter. The JB shall have suitable for installing glands of suitable size on the bottom of the box. The JB shall be suitable for surface mounting on ceiling/structures. The JB shall be of grey color RAL 7035. All the metal parts shall be corrosion protected. Junction box surface should be such that it is free from crazings, blisterings, wrinkling, colour blots/striations. There should not be any mending or repair of surface. JB's will be provided with captive screws so that screws don't fall off when cover is opened. JB's mounting brackets should be of powder coated MS. Type test reports for the following tests shall be furnished:-

(a) Impact resistance for impact energy of 2 Joules (IK07)as per BS EN50102

(b) Thermal ageing at 70deg C for 96 hours as per IEC60068-2-2Bb.

(c) Class of protection shall be IP 55.

(d) HV test.

3.04.02 Terminal blocks shall be 1100V grade, of suitable current rating, made up of unbreakable polyamide 6.6 grade. The terminals shall be screw type or screw-less (spring loaded) / cage clamp type with lugs. Marking on terminal strips shall correspond to the terminal numbering in wiring diagrams. All metal parts shall be of non-ferrous material. In case of screw type terminals the screw shall be captive, preferably with screw locking design. All terminal blocks shall be suitable for terminating on each side the required cables/wire size. All internal wiring shall be of cu. Conductor PVC wire.

3.05.00 **Terminations & Straight Through Joints**

3.05.01 Termination and jointing kits for 33kV, 11 kV, 6.6 KV and 3.3 kV grade XLPE insulated cables shall be of proven design and make which have already been extensively used and type tested. Termination kits and jointing kits shall be Pre-moulded type or heat shrinkable type. Further Cold shrinkable type termination and jointing kits are also acceptable. The Cold shrinkable type kits shall be type tested as per relevant standards. Calculation to withstand the required fault level shall also be furnished in case of cold shrinkable type kits. 33 kV, 11 kV, 6.6 KV and 3.3kV grade joints and terminations shall be type tested and Type test reports as per IS:13573 Part-II and IEC60502 shall be furnished. Also, heat shrink material shall comply with requirements of ESI 09-13 (external tests). Critical components used in cable accessories shall be of tested and proven quality as per relevant product specification/ESI specification. Cable joints and terminations should be with FRLS properties as per IEC 60754-1&2. Kit contents shall be supplied from the same source as were used for type testing. The kit shall be complete with the tinned copper solderless crimping type cable lugs & ferrule or mechanical connectors (wherein bolts are tightened that shear off at an appropriate torque) as per DIN standard suitable for aluminium compacted conductor cables. (Tender drg. no 0000-211-POE –A-51-RA of cable lug attached at the end of this chapter)..

3.05.02 Straight through joint and termination shall be capable of withstanding the fault level of 21 KA for 0.12 Sec. with dynamic peak of 52 KA for 33 KV system & of 40 kA for 0.12 sec with a dynamic peak of 100 kA for 11 kV, 6.6 KV & 3.3 KV system. Straight through joints shall

have provisions for shield connection and earthing wherever required and complete with all accessories and consumables suitable for storage without deterioration at a temperature of 50 deg. C with shelf life of more than five years. 1.1 kV grade straight through joints shall also be of proven design

3.05.03 1.1 KV grade Straight Through Joint shall be of proven design.

3.06.00 **Cable glands**

3.06.01 Cable shall be terminated using double compression type cable glands. Testing requirements of Cable glands shall conform to BS:6121 and gland shall be of robust construction capable of clamping cable and cable armour (for armoured cables) firmly without injury to insulation. Cable glands shall be made of heavy duty brass machine finished and nickel chrome plated. Thickness of plating shall not be less than 10 micron. All washers and hardware shall also be made of brass with nickel chrome plating Rubber components shall be of neoprene or better synthetic material and of tested quality. Cable glands shall be suitable for the sizes of cable supplied/erected.

3.07.00 Cable lugs/ferrules

3.07.01 Cable lugs/ferrules for power cables shall be tinned copper solderless crimping type suitable for aluminium compacted conductor cables. Cable lugs and ferrules for control cables shall be tinned copper type. The cable lugs for control cables shall be provided with insulating sleeve and shall suit the type of terminals provided on the equipments. Cable lugs and ferrule shall conform to DIN standards.

3.08.00 **Trefoil clamps**

3.08.01 Trefoil clamps for single core cables shall be pressure die cast aluminum or fibre glass or nylon and shall include necessary fixing accessories like G.I. nuts, bolts, washers, etc. Trefoil clamps shall have adequate mechanical strength, when installed at 1 mtr intervals, to withstand the forces generated by the peak value of maximum system short circuit current.

3.09.00 **Cable Clamps & Ties**

3.09.01 The cable clamps/ties required to clamp multicore cables shall be of SS-316 material, 12mm wide, polyster coated ladder lock type. The clamps/ties shall have self locking arrangement & shall have sufficient strength. The cable clamps/ties shall be supplied in finished individual pieces of suitable length to meet the site requirements.

3.10.00 **Receptacles**

3.10.01 Receptacles boxes shall be fabricated out of MS sheet of 2mm thickness and hot dipped gavanised or of die-cast aluminium alloy of thickness not less than 2.5 mm. The boxes shall be provided with two nos. earthing terminals, gasket to achieve IP55 degree of protection, terminal blocks for loop-in loop-out for cable of specified sizes, mounting brackets suitable for surface mounting on wall/column/structure, gland plate etc. The ON-OFF switch shall be rotary type heavy duty, double break,AC23 category, suitable for AC supply. Plug and Socket shall be shrouded Die-cast aluminium. Socket shall be provided with lid safety cover. Robust mechanical interlock shall be provided such that the switch can be put ON only when the plug is fully engaged and plug can be withdrawn only when the switch is in OFF position. Also cover can be opened only when the switch is in OFF position. Wiring shall be carried out with 1100 V grade PVC insulated stranded aluminium/copper wire of adequate size. The Terminal blocks shall be of 1100 V grade. The Terminal blocks shall be of 1100 V grade made up of unbreakable polymide 6.6 grade with adequate current rating and size. The welding receptacles shall be provided with RCCB/RCD of 30mA sensitivity having facility for manual testing/checking of operation of RCCB/RCD

3.12.00	**Cable Drum Lifting Jack**
	The jack for cable drum lifting shall be of screw type with 10 ton capacity. The cable drum jacks shall be manufactured from fabricated steel. The spindles supplied with the cable drum jack shall be manufactured using BSEN-24 grade steel bar with locking collars. Jack nests shall be of SG cast steel. Cable drum jack supplied shall have undergone load testing and reports for the same shall be submitted. At least Two Nos. of jacks shall be supplied for NTPC use. Contractor has to make arrangements for his own jacks for cable reeling/unreeling under his scope of installation.
3.13.00	**Galvanising**
3.13.01	Galvanising of steel components and accessories shall conform to IS:2629 , IS4759 & IS:2633. Additionally galvanising shall be uniform, clean smooth, continuous and free from acid spots.
3.13.02	The amount of zinc deposit over threaded portion of bolts, nuts, screws and washers shall be as per IS:1367 . The removal of extra zinc on threaded portion of components shall be carefully done to ensure that the threads shall have the required zinc coating on them as specified
3.14.00	**Welding**
3.14.01	The welding shall be carried out in accordance with IS:9595. All welding procedures and welders qualification shall also be followed strictly in line with IS:9595
4.00.00	**INSTALLATION**
4.01.00	**Cable tray and Support System Installation**
4.01.01	Cables shall run in cable trays mounted horizontally or vertically on cable tray support system which in turn shall be supported from floor, ceiling, overhead structures, trestles, pipe racks, trenches or other building structures.
4.01.02	Horizontally running cable trays shall be clamped by bolting to cantilever arms and vertically running cable trays shall be bolted to main support channel by suitable bracket/clamps on both top and bottom side rails at an interval of 2000 mm in general. For vertical cable risers/shafts cable trays shall be supported at an interval of 1000mm in general. Fixing of cable trays to cantilever arms or main support channel by welding shall not be accepted. Cable tray installation shall generally be carried out as per the approved guidelines/ drawings. Vendor shall design the support system along with tray, spacing etc in line with tray loadings/drawings.
4.01.03	The cantilever arms shall be positioned on the main support channel with a minimum vertical spacing of 300 mm unless otherwise indicated.
4.01.04	The contractor shall fix the brackets/ clamps/ insert plates using anchor fasteners. Minimum size of anchor fasteners shall be M 8 X 50 and material shall be stainless steel grade 316 or better. Anchor fastener shall be fixed as recommended by manufacturer and as approved by site engineer. For brick wall suitable anchor fasteners shall be used as per the recommendations of manufacturer. Make of anchor fasteners subject to QA approval and the same shall be finalized at pre-award stage.
4.01.05	All cable way sections shall have identification, designations as per cable way layout drawings and painted/stenciled at each end of cable way and where there is a branch connection to another cable way. Minimum height of letter shall be not less than 75 mm. For long lengths of trays, the identification shall be painted at every 10 meter. Risers shall additionally be painted/stenciled with identification numbers at every floor.

4.01.06 In certain cases it may be necessary to site fabricate portions of trays, supports and other non standard bends where the normal prefabricated trays, supports and accessories may not be suitable. Fabricated sections of trays, supports and accessories to make the installation complete at site shall be neat in appearance and shall match with the prefabricated sections in the dimensions. They shall be applied with one coat of red lead primer, one coat of oil primer followed by two finishing coats of aluminium paint.

4.02.00 **Conduits/Pipes/Ducts Installation**

4.02.01 The Contractor shall ensure for properly embedding conduit pipe sleeves wherever necessary for cabling work. All openings in the floor/roof/wall / cable tunnel/cable trenches made for conduit installation shall be sealed and made water proof by the Contractor.

4.02.02 GI pull wire of adequate size shall be laid in all conduits before installation. Metallic conduit runs at termination shall have two lock nuts wherever required for junction boxes etc.

4.02.03 Conduit runs/sleeves shall be provided with PVC bushings having round edge at each end. All conduits/pipes shall have their ends closed by caps until cables are pulled. After cables are pulled, the ends of conduits/pipes shall be sealed with Glass wool/Cement Mortar/Putty to prevent entrance of moisture and foreign material

4.02.04 Exposed conduit/pipe shall be adequately supported by racks, clamps, straps or by other approved means. Conduits /pipe support shall be installed square and true to line and grade with an average spacing between the supports as given below, unless specified otherwise

Conduit /pipe size (dia).	**Spacing**
Upto 40 mm	1 M
50 mm	2.0 M
65-85 mm	2.5 M
100 mm and above	3.0 M

4.02.05 For bending of conduits, bending machine shall be arranged at site by the contractor to facilitate cold bending. The bends formed shall be smooth.

4.03.00 **Junction Boxes Installation**

4.03.01 Junction boxes shall be mounted at a height of 1200mm above floor level or as specified in the drawings and shall be adequately supported/mounted on masonry wall by means of anchor fasteners/ expandable bolts or shall be mounted on an angle, plate or other structural supports fixed to floor, wall, ceiling or equipment foundations.

4.04.00 **Cable Installation**

4.04.01 Cable installation shall be carried out as per IS:1255 and other applicable standards.

4.04.02 For Cable unloading, pulling etc following guidelines shall be followed in general:

a) Cable drums shall be unloaded, handled and stored in an approved manner on hard and well drained surface so that they may not sink. In no case shall be drum be stored flat i.e. with flange horizontal. Rolling of drums shall be avoided as far as possible. For short distances, the drums may be rolled provided they are rolled slowly and in proper direction as marked on the drum. In absence of any indication, the drums may be rolled in the same direction as it was rolled during taking up the cables. For unreeling the cable, the drum shall be mounted on suitable jacks or on

cable wheels and shall be rolled slowly so that cable comes out over the drum and not from below. All possible care shall be taken during unreeling and laying to avoid damage due to twist, kink or sharp bends. Cable ends shall be provided with sealed plastic caps to prevent damage and ingress of moisture.

b) While laying cable, ground rollers shall be used at every 2 meter interval to avoid cable touching ground. The cables shall be pushed over the rollers by a gang of people positioned in between the rollers. Cables shall not be pulled from the end without having intermediate pushing arrangements. Pulling tension shall not exceed the values recommended by cable manufacturer. Selection of cable drums for each run shall be so planned so as to avoid using straight through joints. Care should be taken while laying the cables so as to avoid damage to cables. If any particular cable is damaged, the same shall be repaired or changed to the satisfaction of Project Manager.

4.04.03 Cables shall be laid on cable trays strictly in line with cable schedule . Where specific cable layouts are not shown on drawings, Contractor shall route these as directed by the Project Manager

4.04.04 Power and control cables shall be laid on separate tiers inline with the approved guidelines/drawings. The laying of different voltage grade cables shall be on different tiers according to the voltage grade of the cables. In horizontal tray stacks, H.T. cables shall be laid on top most tier and cables of subsequent lower voltage grades on lower tiers of trays. Single core cable in trefoil formation shall be laid with a distance of four times the diameter of cable between trefoil center lines and clamped at every-one metre. All multicore cables shall be laid in touching formation. Power and control cables shall be secured fixed to trays/support with cable clamps/ties with self locking arrangement. For horizontal trays arrangements, multicore power cables and control cables shall be secured at every five meter interval. For vertical tray arrangement, individual multicore power cables and control cables shall be secured at every one meter. After completion of cable laying work in the particular vertical tray, all the control cables shall be binded to trays/supports by cable clamps/ties with self locking arrangement at every five meter interval and at every bend.
Fibre Optical cable shall be laid in trenches/trays or as decided by Employer.

4.04.05 Bending radii for cables shall be as per manufacturer's recommendations and IS:1255.

4.04.06 Where cables cross roads/rail tracks, the cables shall be laid in hume pipe/ HDPE pipe.

4.04.07 No joints shall be allowed in trip circuits, protection circuits and CT/PT circuits. Also joints in critical equipment in main plant area shall not be permitted. Vendor shall identify and accordingly procure the cable drum length.

4.04.08 In each cable run some extra length shall be kept at suitable point to enable one LT/two HT straight through joints to made, should the cable develop fault at a later stage. Control cable termination inside equipment enclosure shall have sufficient lengths so that shifting of termination in terminal blocks can be done without requiring any splicing.

4.04.09 Wherever few cables are branching out from main trunk route troughs shall be used.

4.04.10 Wind loading shall be considered for designing support as well Cable trays wherever required.

4.04.11 Where there is a considerable risk of steam, hot oil or mechanical damage cable routes shall be protected by barriers or enclosures.

4.04.12 The installation work shall be carried out in a neat workman like manner & areas of work shall be cleaned of all scraps, water, etc. after the completion of work in each area every

day. Contractor shall replace RCC/Steel trench covers after the Installation work in that particular area is completed or when further work is not likely to be taken up for some time.

4.04.13 **Separation**

At least 300mm clearance shall be provided between:

- HT power & LT power cables,
- LT power & LT control/instrumentation cables,

4.04.14 **Segregation**

1) Segregation means physical isolation to prevent fire jumping.

2) All cables associated with the unit shall be segregated from cables of other units.

3) Interplant cables of station auxiliaries and unit critical drives shall be segregated in such a way that not more than half of the drives are lost in case of single incident of fire. Power and control cables for AC drives and corresponding emergency AC or DC drives shall be laid in segregated routes. Cable routes for one set of auxiliaries of same unit shall be segregated from the other set.

4) In switchyard, control cables of each bay shall be laid on separate racks/trays.

4.04.15 Minimum number of spare cores required to be left for interconnection in control cables shall be as follows:

Minimum number of spare cores required to be left for interconnection in control cables shall be as follows:

No. of cores in cable	No. of spare cores
2C,3C	NIL
5C	1
7C-10C	2
14C and above	3

4.04.16 **Directly Buried Cables**

a) Cable trenches shall be constructed for directly buried cables. Construction of cable trench for cables shall include excavation, preparation of sieved sand bedding, riddled soil cover, supply and installation of brick or concrete protective covers, back filling and compacting, supply and installation of route markers and joint markers. Laying of cables and providing protective covering shall be as per IS:1255 and the enclosed drawings showing cabling details.

b) RCC cable route and RCC joint markers shall be provided wherever required. The voltage grade of the higher voltage cables in route shall be engraved on the marker. Location of underground cable joints shall be indicated with cable marker with an additional inscription "Cable Joint". The marker shall project 150 mm above ground and shall be spaced at an interval of 30 meters and at every change in direction. They shall be located on both sides of road crossings and drain crossings. Top of cable marker/joint marker shall be sloped to avoid accumulation of water/dust on marker.

4.04.17	Cable tags shall be provided on all cables at each end (just before entering the equipment enclosure), on both sides of a wall or floor crossing, on each duct/conduit entry, and at every 20 meters in cable tray/trench runs. Cable tags shall also be provided inside the switchgear, motor control centers, control and relay panels etc. where a number of cables enter together through a gland plate. Cable tag shall be of rectangular shape for power cables and control cables. Cable tag shall be of 2 mm thick aluminum with number punched on it and securely attached to the cable by not less than two turns of 20 SWG GI wire conforming to IS:280. Alternatively, the Contractor may also provide cable tags made of nylon, cable marking ties with cable number heat stamped on the cable tags. The cable tag requirements mentioned above shall prevail over Tag requirements mentioned elsewhere in this document for HT power, LT power & control cables.
4.04.18	While crossing the floors, unarmoured cables shall be protected in conduits upto a height of 500 mm from floor level if not laid in tray.
4.05.00	**Cable Terminations & Connections**
4.05.01	The termination and connection of cables shall be done strictly in accordance with cable termination kit manufacturer" instructions, drawings and/or as directed by Project Manager. Cable jointer shall be qualified to carryout satisfactory cable jointing/termination. Contractor shall furnish for review documentary evidence/experience reports of the jointers to be deployed at site.
4.05.02	Work shall include all clamps, fittings etc. and clamping, fitting, fixing, plumbing, soldering, drilling, cutting, taping, preparation of cable end, crimping of lug, insulated sleeving over control cable lugs, heat shrinking (where applicable), connecting to cable terminal, shorting and grounding as required to complete the job to the satisfaction of the Project Manager.
4.05.03	The equipment will be generally provided with undrilled gland plates for cables/conduit entry. The Contractor shall be responsible for punching of gland plates, painting and touching up. Holes shall not be made by gas cutting. The holes shall be true in shape. All cable entry points shall be sealed and made vermin and dust proof. Unused openings shall be effectively sealed by 2mm thick aluminium sheets.
4.05.04	Control cable cores entering control panel/switchgear/MCC/miscellaneous panels shall be neatly bunched, clamped and tied with self locking type nylon cable ties with de interlocking facility to keep them in position.
4.05.05	All the cores of the control cable to be terminated shall have identification by providing ferrules at either end of the core, each ferrule shall be indelible, printed single tube ferrule and shall include the complete wire number and TB number as per the drawings. The ferrule shall fit tightly on the core. Spare cores shall have similar ferrules with suffix sp1, sp2, ---etc along with cable numbers and coiled up after end sealing.
4.05.06	All cable terminations shall be appropriately tightened to ensure secure and reliable connections.
5.00.00	**EARTHING SYSTEM**
5.01.00	Earthing system shall be in strict accordance with IS:3043 and Indian Electricity Rules/Acts. Earthing system network/earthmat shall be interconnected mesh of mild steel rods buried in ground in the plant. All off-site areas shall be interconnected together by minimum two parallel conductors. The Contractor shall furnish the detailed design and calculations for

Employer's approval. Contractor shall obtain all necessary statutory approvals for the system.

5.02.00 The earth conductors shall be free from pitting, laminations, rust, scale and other electrical, mechanical defects

5.03.00 The material of the earthing conductors shall be as follows :

1)	Conductors above ground level and in built up trenches.	-	Galvanized steel
2)	Conductors buried in earth	-	Mild steel
3)	Earth electrodes	-	Mild steel rod

5.04.00 The sizes of earthing conductors for various electrical equipments shall be as below:

	Equipment	Earth conductor buried in earth	Earth conductor above ground level & in built-up trenches
a)	Main earth grid	MS rod -Min 40 mm dia. or as per actual calculation whichever is more	65 x 8mm GS flat
b)	33kV/11kV/6.6kV/3.3 kV/ switchgear equipment and 415V switchgear	---	65 x 8mm GS flat
c)	415 V MCC/ Distribution boards / Transformers	---	50 x 6mm GS flat
d)	LT Motors above 125 KW	---	50 x 6mm GS flat
	25 KW to 125 KW	---	25 x 6mm GS flat
	1KW to 25 KW	---	25 x 3mm GS flat
	Fractional House power motor	---	8 SWG GS wire
e)	Control panel & control desk	---	25 x 3 mm GS flat
f)	Push button station / Junction Box	---	8 SWG GI wire
g)	Columns, structures, cable trays and bus ducts enclosures	---	50 x 6mm GS flat
h)	Crane, rails, rail tracks & other non-current carrying metal parts		25 x 6mm GS flat

5.05.00 Metallic frame of all electrical equipment shall be earthed by two separate and distinct connections to earthing system, each of 100% capacity, Crane rails, tracks, metal pipes and conduits shall also be effectively earthed at two points. Steel RCC columns, metallic stairs, and rails etc. of the building housing electrical equipment shall be connected to the nearby

	earthing grid conductor by one earthing ensured by bonding the different sections of hand rails and metallic stairs. Metallic sheaths/screens, and armour of multi-core cables shall be earthed at both ends. Metallic Sheaths and armour of single core cables shall be earthed at switchgear end only unless otherwise approved. Every alternate post of the switchyard fence shall be connected to earthing grid by one GS flat and gates by flexible lead to the earthed post. Railway tracks within the plant area shall be bonded across fish plates and connected to earthing grid at several locations. Portable tools, appliances and welding equipment shall be earthed by flexible insulated cable.
5.06.00	Each continuous laid lengths of cable tray shall be earthed at minimum two places by G.S. flats to earthing system, the distance between earthing points shall not exceed 30 meter. Wherever earth mat is not available, necessary connections shall be done by driving an earth electrode in the ground
5.07.00	Neutral points of HT transformer shall be earthed through NG resistors. The Contractor shall connect the NGR earthing point to earth electrodes by suitable earth conductors.
5.08.00	Neutral connections and metallic conduits/pipes shall not be used for the equipment earthing. Lightning protection system down conductors shall not be connected to other earthing conductors above the ground level.
5.09.00	Connections between earth leads and equipment shall normally be of bolted type. Contact surfaces shall be thoroughly cleaned before connections. Equipment bolted connections after being tested and checked shall be painted with anti corrosive paint/compound.
5.10.00	Suitable earth risers as approved shall be provided above finished floor/ground level, if the equipment is not available at the time of laying of main earth conductor.
5.11.00	Connections between equipment earthing leads and between main earthing conductors shall be of welded type. For rust protection the welds should be treated with red lead compound and afterwards thickly coated with bitumen compound. All welded connections shall be made by electric arc welding.
5.12.00	Resistance of the joint shall not be more than the resistance of the equivalent length of conductors.
5.13.00	Earthing conductors buried in ground shall be laid minimum 600 mm below grade level unless otherwise indicated in the drawing. Back filling material to be placed over buried conductors shall be free from stones and harmful mixtures. Back filling shall be placed in layers of 150 mm.
5.14.00	Earthing conductors embedded in the concrete floor of the building shall have approximately 50 mm concrete cover.
5.15.00	A minimum earth coverage of 300 mm shall be provided between earth conductor and the bottom of trench/foundation/underground pipes at crossings. Earthing conductors crossings the road can be installed in pipes. Wherever earthing conductor crosses or runs at less than 300 mm distance along metallic structures such as gas, water, steam pipe lines, steel reinforcement in concrete, it shall be bonded to the same.
5.16.00	Earthing conductors along their run on columns, walls, etc. shall be supported by suitable welding / cleating at interval of 1000mm and 750mm respectively.
5.17.00	Earth pit shall be of treated type & shall be constructed as per IS:3043. Electrodes shall be embedded below permanent moisture level. Minimum spacing between electrodes shall be 600mm. Earth pits shall be treated with salt and charcoal as per IS:3043. Test links shall be

provided with bolted arrangement alongwith each earth pit, in order to facilitate measurement of earth resistance as & when required.

5.18.00 On completion of installation continuity of earth conductors and efficiency of all bonds and joints shall be checked. Earth resistance at earth terminations shall be measured and recorded. All equipment required for testing shall be furnished by contractor.

5.19.00 Earthing conductor shall be buried at least 2000mm outside the fence of electrical installations. Every alternate post of the fences and all gates shall be connected to earthing grid by one lead.

5.20.00 Other Requirements of Earthing System:

Standard/Code	IEEE 80, IS 3043
Earthing System	
Life expectancy	40 Years
System Fault Level	As per system requirement (B0)
Soil resistivity	Actual as per site conditions.
Min. Steel corrosion	0.12mm/year
Depth of burial of main earth conductor	600mm below grade level; where it crosses trenches, pipes, ducts, tunnels, rail tracks, etc., it shall be at least 300mm below them.
Conductor joints	By electric arc welding, with resistance of joint not more than that of the conductor.

Welds to be treated with red lead for rust protection and then coated with bitumen compound for corrosion protection.

Surface resistivity	- Gravel	3000 ohm-meter
	- Concrete	500 ohm-meter

6.00.00 LIGHTNING PROTECTION SYSTEM

6.01.01 Lightning protection system shall be in strict accordance with IEC:62305 .

6.01.02 Lightning conductor shall be of 25x6mm GS strip when used above ground level and shall be connected through test link with earth electrode/earthing system

6.01.03 Lightning system shall comprise of air terminations, down conductors, test links, earth electrode etc. as per approved drawings.

6.02.00 **Down Conductors**

1. Down conductors shall be as short and straight as practicable and shall follow a direct path to earth electrode.

2. Each down conductor shall be provided with a test link at 1000 mm above ground level for testing but it shall be in accessible to interference. No connections other than the one direct to an earth electrode shall be made below a test point.

3. All joints in the down conductors shall be welded type.

4. Down conductors shall be cleated on outer side of building wall, at 750 mm interval or welded to outside building columns at 1000 mm interval.

5. Lightning conductor on roof shall not be directly cleated on surface of roof. Supporting blocks of PCC/insulating compound shall be used for conductor fixing at an interval of 1500 mm.

6. All metallic structures within a vicinity of two meters of the conductors shall be bonded to conductors of lightning protection system.

7. Lightning conductors shall not pass through or run inside GI Conduits.

8. Testing link shall be made of galvanized steel of size 25x 6mm.

9. Pulser system for lightning shall not be accepted.

10. Hazardous areas handling inflammable/explosive materials and associated storage areas shall be protected by a system of aerial earths.

7.00.00 TESTS

7.01.01 All equipment to be supplied shall be of type tested design. During detail engineering, the contractor shall submit for Owner's approval the reports of all the type tests as listed in this specification and carried out within last ten years from the date of bid opening. These reports should be for the test conducted on the equipment similar to those proposed to be supplied under this contract and the test(s) should have been either conducted at an independent laboratory or should have been witnessed by a client.

7.01.02 However if the contractor is not able to submit report of the type test(s) conducted within last ten years from the date of bid opening, or in the case of type test report(s) are not found to be meeting the specification requirements, the contractor shall conduct all such tests under this contract at no additional cost to the owner either at third party lab or in presence of client/owners representative and submit the reports for approval.

7.01.03 All acceptance and routine tests as per the specification and relevant standards shall be carried out. Charges for these shall be deemed to be included in the equipment price.

7.01.04 The type test reports once approved for any projects shall be treated as reference. For subsequent projects of NTPC, an endorsement sheet will be furnished by the manufacturer confirming similarity and "No design Change". Minor changes if any shall be highlighted on the endorsement sheet.

7.02.00 **Type Test reports shall be furnished for the following**

7.02.01 Type tests on Cable Trays support system

a) **Test 1A:**

On main support channel type-C2 for cantilever arms fixed on one side only. A 3.5 meter length of main support channel shall be fixed vertically at each end to a rigid structure as per the fixing arrangement as shown in the enclosed drawing. Eight (8) nos. 750 mm cantilever arms shall be fixed to the main channel and each arm shall be loaded over the outboard 600 mm with a uniform working load of 100 kg. Subsequently a point load of 100 kg shall be applied on arm 2. A uniform proof load on all the arms equal to twice the working load shall be then be applied. Deflections shall be measured at the points shown in the enclosed drawings and at the following load intervals:

i) Working load

ii) Working load + point load

iii) Off load

iv) Proof load + point load

v) Off load

The deflection measured at working loads shall not exceed 16mm. The permanent deflection after removing the combination of working load and point load shall not exceed 10 mm at the arm tips and 6 mm on the channel. No collapse of the structure shall occur with a combination of proof load and point load applied.

B) **Test 1B:**

Test 1A shall be repeated with Eight Cantilever arms uniformly loaded and with the same point load on arm 2

Test 2: On Main support channel type -C2 for cantilever arms fixed on both sides

a) Test 2A: A 3.5 m length of main support channel C2 for cantilever arms fixing on both sides shall be fixed at each end to rigid structure as per the fixing arrangement as shown in the enclosed drawing. Six (6), 750 mm cantilever arms shall be attached to each sides and each arm uniformly loaded to a working load of 100 kg over the out board 600 mm. A point load of 100 kg shall than be applied to arm 2, followed by a uniform proof load of twice the working load on all the arms; deflection shall be measured at points shown in the enclosed drawings at the following load intervals.

i) Working load

ii) Working load + Point load

iii) Off load

iv) Proof load + Point load

v) Off load

The deflection measured at working loads shall not exceed 16mm. The permanent deflection after removing the combination of working load and point load shall not exceed 10 mm at the arm tips and 6 mm on the channel. No collapse of the structure shall occur with a combination of proof load and point load applied

b) Test 2 B: The test 2 A shall be repeated with the assembly but with an asymmetrical load on the C2 column and point load applied to arm 8. The 100 kg and 200 kg uniformly distributed loads shall be applied to the upper three arms on one side and the lower three arms on the opposite side.

Test 3 : Tests on Channel Fixed on Beam/Floor

A length of main support channel section shall be fixed to steel structure/floor and have loads applied as shown in the drawing enclosed and as detailed below

a) **Test 3A :** A length of steel structure shall be rigidly supported. It should be fitted on a meter length of channel section using beam clamps welded/bolted. A point load of 1200 kg shall be applied to the centre point via two brackets. No distortion or pulling of the components shall take place.

b) **Test 3B:** With the components assembled as in Test 3A, two perpendicular point loads of 600 kg shall be simultaneously applied at positions 150 mm either side of the centre line, no distortion or pulling of the components shall take place.

c) **Test 3C:** With the components assembled as in Test 3A, a perpendicular point load shall be applied at a point 150 mm on one side of the centre line.

The load shall be gradually increased to the maximum value that can be applied without causing distortion or pulling of the components. This value shall be recorded.

Test 4 : Channel Insert Test

A 2.5 m length of C1 channel fixed to the concrete wall/ steel structure as per actual site installation conditions. 6 nos. of 750 mm cantilever arms shall be attached to C1 channel as shown in enclosed drawing. Each arm uniformly loaded to a working load of 100 kg over the out board 600 mm. A point load of 100 kg shall than be applied to arm 2, followed by a uniform proof load of twice the working load on all the arms; deflection shall be measured at points shown in the enclosed drawings at the following load intervals.

i) Working Load

ii) Working Load + Point Load

iii) Off Load

iv) Proof Load + Point Load

v) Off load

The deflection measured at working loads shall not exceed 16mm. The permanent deflection after removing the combination of working load and point load shall not exceed 10 mm at the arm tips and 6 mm on the channel. No collapse of the structure shall occur with a combination of proof load and point load applied

Test 5 : Channel nut slip characteristics (what ever applicable)

Tests 5A1,5A2,5A3 : A length of channel C1 section 200mm long shall have fitted bracket with the two bolt fixing as shown in drawing enclosed.
With loads applied at the position shown in drawing enclosed nut slip shall be determined with bolt torque of 30NM, 50 NM and 65 NM No fewer than three measurements shall be made for each torque setting.

A minimum loading of 720 kg shall be obtained before nut slip with bolt torque of 65 NM.

Tests 5B1,5B2,5B3: The length of channel C1 section 200 mm long shall have fitted bracket with the one bolt fixing as shown in drawing enclosed. With loads applied at the position shown in drawing, nut slip shall be determined with bolt torques of 30 NM, 50 NM and 65 NM. No fewer than three measurements shall be made for each torque setting.

A minimum loading of 350 kg shall be obtained before nut slip with a bolt torque of 65 NM.

Test 6 Weld Integrity Test

After deflection test as per test 1A, 1B, 2, 3 & 4 weld integrity shall be checked by magnetic particle inspection to detect sub-surface cracks developed, if any.

7.02.02 Cable termination kit and straight through joints should have been tested as per IS:13573 for 3.3kV grade & above.

7.03.00 **Routine/ Acceptance Tests**

7.03.01 **Routine Tests**

a) Routine tests as per specification and applicable standards shall be carried out on all requirements/items covered in the specification.

b) Physical & dimensional check on all equipments as per approved drawings/standards

.

c) HV/IR as applicable.

d) Check/measurement of thickness of paint/zinc coating/nickel-chrome plating as per specification & applicable standard.

7.03.02 **Acceptance Test**

a) Galvanising Tests as per applicable standards

b) Welding checks

c) Deflection tests on cable trays:

d) One piece each of 2.5m length of cable tray of 300mm & above shall be taken as sample from each offered lot. It shall be supported at both end & loaded with uniform load of 76 kg/meter along the length of cable tray. The maximum deflection at the mid-span of each size shall not exceed 7mm.

d) Proof load tests on cable tray support system

i) Tests on Main Support Channel shall be done if only C1 Channel are in scope of supply and cantilever arms shall be fitted on one side. This test shall be same as test 4 of type test.

ii) Test on Main Support Channel shall be done with C2 channel and cantilever arms fitted on both sides, if C2 channels are in scope of supply. This test shall be same as test 2A of type test. Then test (i) above shall not be done.

iii) Nut slip characteristic test (it shall support minimum load of 350kg before nut slips with a bolt torque of 65 NM). This test shall be same as test 5B3 of type test.
The procedure for carrying out tests at "d" above shall be as per details given in Type Tests in specification thereafter Die-Penetration test shall be carried out to check weld integrity.

d) The above acceptance tests shall be done only on one sample from each offered lot.

8.00.00 **COMMISSIONING**

8.01.01 The Contractor shall carry out the following commissioning tests and checks after installation at site. In addition the Contractor shall carry out all other checks and tests as recommended by the Manufacturers or else required for satisfactory performance..

8.01.02 **Cables**

a) Check for physical damage

b) Check for insulation resistance before and after termination/jointing.

c) HT cables shall be pressure tested (test voltage as per IS:7098) before commissioning.

d) Check of continuity of all cores of the cables.

e) Check for correctness of all connections as per relevant wiring diagrams. Any minor modification to the panel wiring like removing/inserting, shorting, change in terminal connections, etc., shall be carried out by the Contractor.

f) Check for correct polarity and phasing of cable connections.

g) Check for proper earth connections for cable glands, cable boxes, cable armour, screens, etc.

h) Check for provision of correct cable tags, core ferrules, tightness of connections.

8.02.00 **Cable trays / supports and accessories**

1) Check for proper galvanizing/painting and identification number of the cable trays/supports and accessories.

2) Check for continuity of cable trays over the entire route.

3) Check that all sharp corners, burrs, and waste materials have been removed from the trays supports.

4) Check for earth continuity and earth connection of cable trays.

8.03.00 **Earthing and Lightning protection system**

1) Earth continuity checks.

2) Earth resistance of the complete system as well as sub-system.

8.04.00 Below Ground Earth Mat:

The earthing system for plant shall be designed as per Clause No:- 3.07.00 of Sub Section B-0 of Technical Specification Section-VI, Part-B

Grounding for TG and other areas or buildings covered in the specification shall be provided in accordance with IS 3043, IEC 62305, IEEE 80.

Earthing system network/earthmat shall be interconnected mesh of mild steel rods buried in ground in the plant. All areas under contractor scope of supply shall be interconnected

together by minimum two parallel conductors. The Contractor shall furnish the detailed design and calculations for Employer's approval. Contractor shall obtain all necessary statutory approvals for the system. All the columns shall be earthed by nearby risers and earthmat grid spacing shall be maximum 10 X 10 mts.. Minimum two nos of risers shall be provided for each equipment in his scope of area. Separate dedicated riser shall be provided for C&I earthing purpose and also for Lightning down conductor connection purpose. Sufficient nos of risers near the equipment shall be provided as per the system requirement.

9.00.00 **ELECTRICAL LAYOUT PHILOSOPHY**:

While developing the layout the bidder must give due consideration to the following requirements:

a) Adequate distance shall be maintained between the transformers. As basic guidelines following norms will be adhered to:

1) Transformers shall be separated from the adjacent building/structures and from each other by a minimum distance as defined below or by a fire wall of two hours of fire resisting of height at least 600 mm above bushing / pressure relief vent whichever is higher.

Oil capacity of individual transformer (in liters)	Clear separating distance (in meters)
5,000 to 10,000	8.0
10,001 to 20,000	10.0
20,001 to 30,000	12.5
Over 30,001	15.0

2) In case of auxiliary transformers having an aggregate oil capacity in excess of 2300 liters but individual oil capacity of less than 5000 liters, the maximum separating distance between transformers and surrounding building shall be at least 6M unless they are separated by fire separating walls or are protected by high velocity spray system.

3.) Rail track shall be provided in Transformer yard for movement of each transformer. The rail track in Transformer yard shall be connected with TG area rail track The Foundation top of transformer & rail top shall be at EL +/- 0.0M. Bus duct support or Transformer body shall be at least 8.0M from A-Row of TG building to clear the movement of GT/ Stator/UT/ST/UAT on rail line. Jacking pads shall be provided where the rail track changes the direction. Mooring post shall be provided on rail track for handling the transformers.

4) For each transformer a pit shall be provided all around at a distance of 1.5 m (minimum) from transformer outer edge. A sump pit shall be provided for each pit. A common oil retention pit per unit shall be provided to hold oil quantity of the largest transformer (by volume) & 10 minutes of water quantity of HVW spray system for the largest transformer. Sump pit of individual transformer shall be connected to common oil retention pit of that unit.

5) Rail track shall be provided for all outdoor transformers up to road for movement of each transformer of size more than or equal to 7.5MVA Transformer. Jacking pads shall be provided where the rail track changes the direction. Jacking pad shall also be provided at the location of installation of transformer and mooring post shall be provided on rail track for handling the transformers.

6.) The Transformer fencing shall be at 1.0 M (minimum) distance from the pit wall. The Height of fencing shall be 2.5 M (minimum) and fencing shall have personal entry gate and removable type fencing/gate for transformer withdrawal.

7) The transformer firewall, pit sizing and clearances from adjacent building/structures etc. shall be as per IS 1646/CBIP manual on Transformer

8) However, for all outdoor transformers of oil capacity less than 2000 litre, a trench of suitable size shall be provided all around at a distance of 1.0 m (minimum) from transformer outer edge. A sump pit shall be provided for each trench.

b) Layout requirements for Electrical MCC/switchgear rooms

1. Separate Switchgear Rooms shall be provided for each unit. For TG building, all HT boards shall be provided in HT switchgear room at only one floor and all LT boards shall be provided in LT switchgear room only.

2. The following clearances shall be maintained for HT Switchboard.

a.) Front Clearance

i) For one Row of Swgr. - 2.0 M (Min)

ii) For two Rows of Swgr. - 2.5 M (Min)

b.) Back Clearance - 1.5 M (Min.)

c.) Side Clearance

Min. 800 mm, however provision to be made for any additional panel in future at both ends. Therefore end clearance shall be 800+width of panel (including spare panels/dummy panels etc.)

3. The following clearances shall be maintained for LT Switchboard.

a.) Front Clearance

i) For one Row of Swgr - 1.5M (Min)
ii) For two Rows of Swgr - 1.5/1.75M depending upon the depth of panels etc

b.) Back Clearance
i) For single front - 1.0M (Min)
ii) For double front - 1.5M (Min)

c.) Side Clearance

Min. 800 mm, however provision to be made for any additional panel in future at both ends. Therefore end clearance shall be 800 mm + width of panel.

For offsite areas, HT Switchboard clearances shall be followed wherever both LT & HT switch boards are in the same MCC room.

4. Height of HT/LT Switchgear Room and Boiler MCC room

i) With Bus Duct – 4.5 m (min)
ii) Without Bus Duct – 4.0 m (min)

Further no vertical bracings shall be envisaged in HT/LT switchgear room and associated cable vault area.

5. Cable trench/Cable vault

For LT switchgear/MCC room at EL 0.0M, minimum 1400 wide x 1400 deep cable trench shall be provided to route the cables. Horizontal cable trays shall be routed in cable trenches.

c) Minimum clear working space 1200mm around the equipment

e) In buildings having MCC, minimum 2 fire door along with one rolling shutter of adequate size/capacity shall be provided.

f) The cable entry and exit from switchgear room shall be from 1.5 mtr (minimum) above FGL.

This drawing and the design it covers are the property of NTPC LTD. and must not be copied, loaned or exhibited either in part or in whole without written permission. Any contravention is liable for prosecution.

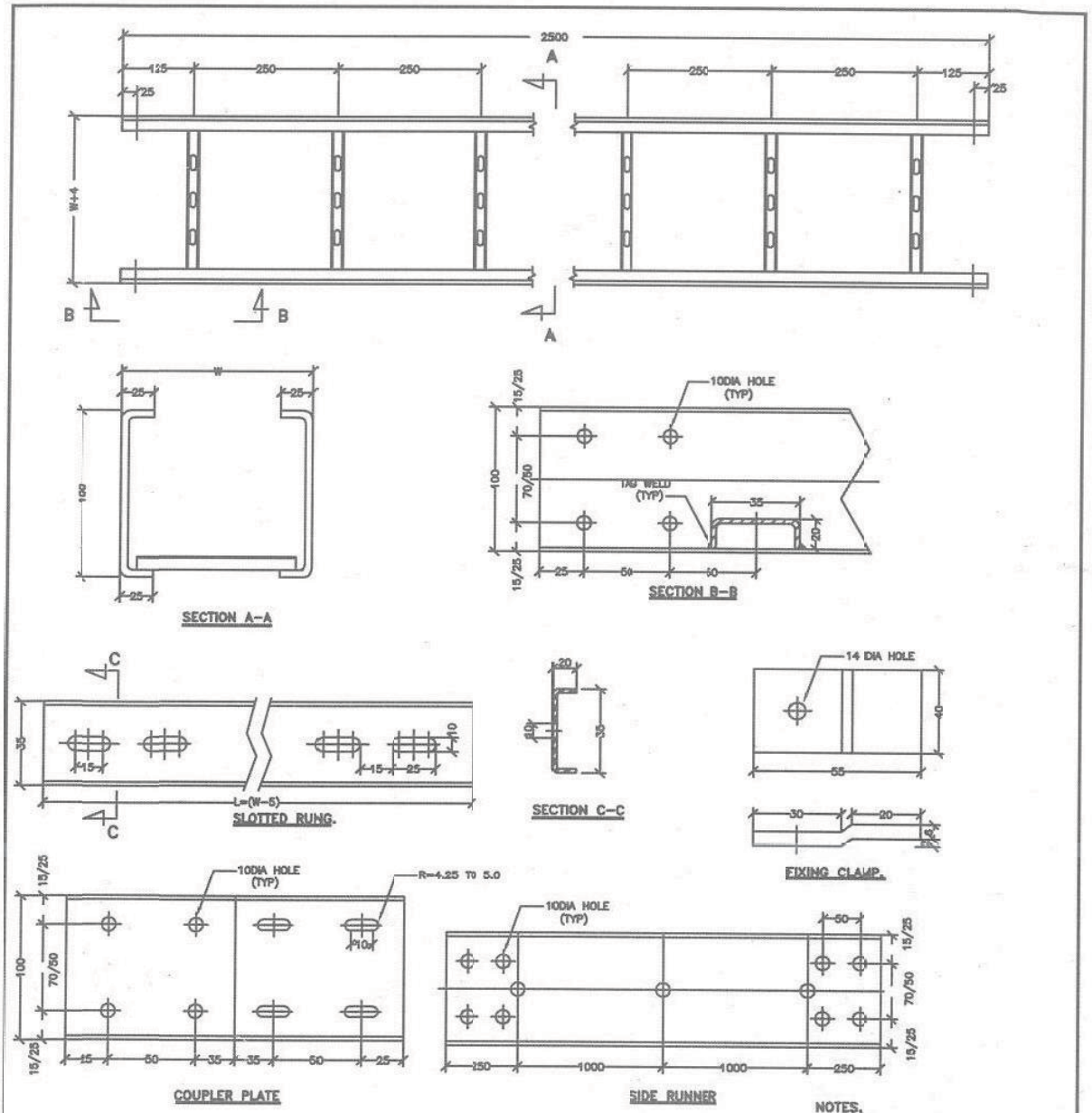

NOTES.

1. ALL DIMENSIONS ARE IN mm.
2. MATERIAL:-2mm THICK. MS SHEET.
3. FINISH :-HOT DIP GALVANISED
4. THICKNESS:-3mm COUPLER PLATE
   2mm TRAY.
5. TOLERANCE:-AS PER RELEVANT I.S.

REV. NO.	DESCRIPTION	DRAWN	DESIGN	CHKD	M	E	C	C&d	ARCH	APPD	DATE
RD	FOR TENDER PURPOSE	[illegible]	[illegible]	[illegible]	–	[illegible]	–	–	–	[illegible]	05.07.10
RC	FOR TENDER PURPOSE	DL	DL	SS	–	RA	–	–	–	AS	[illegible]
RB	FOR TENDER PURPOSE	–	–	–	–	–	–	–	–	–	[illegible]
RA	FOR TENDER PURPOSE	–	–	–	–	–	–	–	–	–	[illegible]

CLEARED BY

एन टी पी सी
NTPC

NTPC LTD.
(A GOVERNMENT OF INDIA ENTERPRISE)
ENGINEERING DIVISION

PROJECT: STANDARD

TITLE: LADDER TYPE CABLE TRAY.

SIZE	SCALE	DRG. NO.	REV. NO.
A4	NTS	0000-211-PDE-A-001	RD

SUB–SECTION – B-6

LT SWITCHGEAR & LT BUSDUCT

(AS PER APPLICABILITY OF SCOPE DEFINED IN SECTION IA & STANDARD ELECTRICAL SCOPE BETWEEN BHEL AND VENDOR IN SECTION IB)

KHURJA SUPER THERMAL POWER PROJECT (2X660 MW) TURBINE GENERATOR AND ASSOCIATED PACKAGES BID DOC. NO.: THDC/RKSH/CC-9915-371	SEPARATOR

1.00.00 **DESIGN PHILOSOPHY / PRACTICE FOR LV BOARD SIZING**

The sizing of LV boards shall be dependent on conditions such as total load connected to a board, diversity factors for various loads connected, Fault Level and Voltage Regulation Considerations, etc.

As far as practicable the system shall provide segregated supplies to main and standby auxiliaries so that the failure of supply to main auxiliary shall in no way jeopardize the standby auxiliary feed. Automatic changeover at critical switchgear / MCC sections shall be provided as necessary to prevent the loss of a unit or to ensure the equipment safety.

1.01.00 **Design Considerations:**

1.01.01 **Sizing of LT boards**

a) Input kVA for a Drive = (Rating in kW X Load Factor) / (Efficiency X Power Factor) where values of load factor , power factor and efficiency are defined below:

   Load (service) factor for 415 V loads is taken as 0.85 for continuous loads and as 0.1 for intermittent load like crane, hoist, etc.

   Efficiency and power factor of LT motors shall be considered as per IS 12615.

b) The Finally selected Busbar ratings for Switchboards, MCCs, ACDBs and Busducts shall include a 10% margin over the calculated values.

c) Lighting load of 50 kVA (Minimum) shall be considered on each section of main switchgears with incomer from transformer as indicated in the tender SLD.

d) Busbar Ratings of Valve / Damper ACDBs shall be derived by addition of 5% of the total kVA load connected and the rating of the largest Valve / Damper connected.

e) Welding sockets shall be connected from Welding DBs, which shall be fed through 1X100% Welding transformers.

f) ESP consumption for 100% BMCR operation shall be considered and further this load shall be uniformly divided among ESP Switchgears.

g) The loads for mechanical auxiliary systems shall be met by auxiliary transformers based on the criteria that each switchgear/MCC/Distribution board shall be fed either by 2x100% or 3x50% transformers/feeders and, these shall be rated to carry the maximum load expected to be imposed. Each of the above boards shall be sectionalized.

h) The sizing of Unit Emergency boards shall be in according to the DG rating. The Emergency board shall have tie to both sections of Unit Service Switchgear for catering unit loads in Blackout Conditions.

i) For Main Plant (TG & SG areas) and Service Building, each Lighting DB shall have 1X100% transformer. For all other areas, each Lighting DB shall have 2X100% transformers.

1.02.00 **Layout Criteria**

The switchboards can be split into two sections based on layout constraints in case of long switchboards to optimize Switchgear room layouts. The two sections of the split shall be connected by Busduct / Cable as per layout requirements.

1.03.00 **Spare capacity and Future Requirements**

All LV Switchboard shall be provided with spare feeders / modules as specified in relevant clause of Part-A of Technical Specification.

1.04.00 **Standardization**

It shall be preferred to have all LV Switchboards for the entire plant from a single manufacturer from maintainability and spares management point of view.

It shall be preferred to follow a standardization of Terminal Numbers across all LV Modules for ease of Interconnection and maintenance.

1.05.00 **Plant control cable Interconnections**

Control cable interconnections between switchgears and transformer marshalling boxes, switchgears and motor terminal boxes / push button stations, and between various switchgears shall be in the contractor's scope.

(a) Standard control cable sizes shall be 1.5 mm^2

(b) Cable size for motor space heater application shall be 2CX2.5 mm^2

(c) Interconnections for Current Transformer terminals shall use two cores of 1.5mm^2 size per phase

(d) Separate control cables shall be used for current transformers

(e) Separate control cables shall be laid for EPB (Emergency/Local Push Button) status from EPB to Switchgear for the Switchgear and DCS.

2.00.00 CODES AND STANDARDS

2.01.00 All equipment shall, generally, comply with the updated issues of

(a.) Applicable Indian Standards

(b.) Indian Electricity Act.

(c.) Indian electricity rules

2.02.00 Equipment complying with any other authoritative / internationally recognized standards such as IEC, British, U.S.A., German, etc. will also be considered if it ensures performance equivalent or superior to Indian Standards. In such cases the contractor shall clearly indicate the standard adopted and furnish the copy of latest English version of the same along with the bid and bring out the salient features for comparison.

2.03.00 All standards, specifications and codes of practice referred to herein shall be the latest editions including all applicable official amendments and revisions as published one month prior to the date of opening of bids. In case of conflict between this specification and those (IS codes, Standards etc.) referred to herein, the former shall prevail. All work shall be carried out as per the following codes and standards.

IS: 5	Colours for ready-mixed paints and enamels.
IS: 694	PVC insulated cables for working voltages up to and including 1100V.
IS: 722	A.C. Electricity Meters

IS: 1248	Electrical Indicating instruments
IS/IEC: 60947–1	Degree of protection provided by enclosures for low voltage Switchgear and Control gear
IS/IEC: 60947-2	A.C. circuit Breakers, MCCB, MCB, MPCB
IS: 2551	Danger Notice Plates
IS: 2629	Hot dip galvanising
IS: 2705	Current Transformers
IS/IEC: IEC-60947-4-1	Contactors and motors starter for voltages not exceeding 1000 V AC or 1200 V DC
IS: 3043	Code of practice for earthing.
IS: 3072	Code of practice for installation and maintenance of Switchgear
IS: 3156	Voltage Transformers
IS: 3202	Code of practice for climate proofing of electrical equipment.
IS: 3231	Electrical relays for power system protection.
IS/IEC 60947	Air-Break Switches, air break disconnectors, air break disconnector and fuse combination units for voltages not exceeding 1000V AC or 1200 V DC.
IS/IEC 60947-1 / IEC-60947-1	General Requirements for Switchgear and Control gear for voltages not exceeding 1000 V.
IS: 5082	Wrought Aluminium and Aluminium alloys for electrical purposes.
IS: 6005	Code of practice of phosphating of iron and steel.
IS/IEC 60947-5-1 / IEC-60947-5-1	LV switchgear and Control gear Control current devices and switching element.
IS: 8623 / IEC: 61439-1/2	Low Voltage Switchgear & Control gear assemblies
IS: 8686	Static Relays
IS: 13703 / IEC: 60269	HRC Cartridge fuses
IS: 10118 (4 parts)	Code of practice for selection, installation and maintenance of switchgear and control gear.

IS: 11171	Specification for dry type transformers.
IEC: 60255	Electrical Relays
IEC: 61850	Communication networks and systems in substations
IS: 11353	Guide for uniform system of marking and identification of conductors and apparatus terminals
IS: 12021	Specification of control transformers for switchgear and Control gear for voltage not exceeding 1000V AC.
IEC: 60947-7-1	Terminal blocks for Copper conductors
IS :513 (2008)	Cold Rolled Low Carbon Steel Sheets and Strips

3.00.00 TECHNICAL PARAMETERS

3.01.00 **Power Supply**

3.01.01 AC SYSTEM

1)	Voltage	415 V ± 10%,3 Phase, 4 wire, solidly earthed
2)	Frequency	50 Hz +/- 5%
3)	Combined variation (in volts & frequency)	10% absolute sum
4)	Fault Level	50 kA(RMS)

3.01.02 DC SYSTEM

1)	System Voltage	240 V DC 2-Wire, Unearthed
2)	Fault Level	20 kA

3.01.03 CONTROL SUPPLY VOLTAGE

1)	Trip & closing coil of circuit breaker	240 V DC/120 V DC
2)	Spring charging motor	240 V DC/120 V DC
3)	MCC control supply	110 V AC Neutral solidly earthed
4)	Space heater & lighting	240 V AC Neutral solidly earthed

CLAUSE NO.	TECHNICAL REQUIREMENTS	
3.02.00	**CUBICLE DATA**	
	Busbar Rating	
	1) Continuous Current rating	As per requirement
	2) Short time rating where	
	a) CB is used as incomer	50 kA(RMS) for one sec
	b)MCCB is used as incomer	Prospective current of 50 kA(RMS) for the MCCB clearing time
	3) Dynamic Rating where	
	a) CB is used as incomer	105 kA(PEAK)
	b)MCCB is used as incomer	Prospective current of 105 kA (PEAK) as limited by MCCB
	4) Busbar insulation	
	a) For switchgear /MCC/ACDB/DCDB /MCCB Box	PVC Sleeve insulated(UL224)
3.03.00	**CIRCUIT BREAKER**	
	1) Type	Air break spring charged stored energy type
	2) Operating duty	O-3 min-CO-3 min-CO
	3) Symmetrical interrupting	50 kA(RMS)
	4) Short circuit rating	105 kA(PEAK)
	5) Short Circuit Breaking current	
	a) AC Component	50 kA(RMS)
	b) DC Component	As per IS/IEC 60947
	6) Short time withstand	50 kA(RMS) for 1 s
	7) No of aux. contacts	4 NO + 4 NC for DDCMIS interface
3.04.00	**METERS**	
	1) Accuracy class	2.0

CLAUSE NO.	TECHNICAL REQUIREMENTS	
	2) One min. power frequency withstand test voltage	2.0 kV (rms)
3.05.00	**Current Transformers**	
	1) Type	Cast Resin Bar Primary / Nylon Casing
	2) Voltage class and frequency	650 V, 50 HZ
	3) Class of insulation	E or better
	4) Rated Secondary Current	1 A
	5) Accuracy class & burden	
	a) For protection	5P20, 5VA PS Class for REF
	b) For metering	class 1.0, 5VA (min) class 0.2s, 5VA (min) for feeders indicated in SLD ,if any
	6) Instrument Security Factor (ISF) for metering CT	5
	7) Short time withstand	
	a) For CT Associated with circuit breaker	50 kA(RMS) for 1 sec
	b) For CT Associated with MCCB protected feeders	Prospective current of 50 kA(RMS) for the MCCB clearing time
	8) Dynamic withstand	
	a) For CTs Associated with circuit breaker	105 kA(PEAK)
	b) For CT Associated with MCCB protected feeders	Prospective current of 105 kA(PEAK) as Limited by MCCB
3.06.00	**BUSDUCT (NON-SEGREGATED, AIR INSULATED TYPE)**	
	1) Type	Non-Segregated

	2) One minute power frequency withstand voltage	2.5 kV
	3) One second short ckt withstand current	50 kA(RMS)
	4) Momentary dynamic current withstand	105 kA(PEAK)
3.07.00	**BUSDUCT (SANDWICH TYPE)**	
	1) Type	Bus Trunking
	2) Rated Insulation voltage	1000V
	3) One second short ckt withstand current	50KA(RMS)
	4) Momentary dynamic current withstand	105KA(PEAK)
	5) Power frequency withstand voltage	3.5kv
	6) Impulse withstand voltage	8kV
	7) Insulation	Class F
3.08.00	**VOLTAGE TRANSFORMERS**	
	1) Type	Cast Resin
	2) Voltage Ratio	415 / 110 V for line PT 415/√3 / 110/√3 V for Bus PT
	3) Method of Construction	V-V
	4) Accuracy Class	0.5 0.2 for feeders indicated in SLD ,if any
	5) Rated Voltage factor	1.1continuous, 1.5 for 30 sec.
	6) Class of insulation	E or better
	7) One minute power frequency withstand voltage	2.5 KV
3.09.00	**HRC FUSES**	
	1) Voltage Class	650 Volts

CLAUSE NO.	TECHNICAL REQUIREMENTS	
	2) Rupturing capacity	80 kA (rms) for AC ckt., 20 kA for DC ckt.
3.10.00	**CONTACTORS**	
	1) Type	Air break electro magnetic
	2) Utilising Category	AC3 of IS/IEC 60947 for non reversible AC4 of IS/IEC 60947 for reversible drives
3.11.00	**Relays**	
	1) Power frequency withstand voltage	2.5 kV for 1 sec. or 2.0 kV for 1 min.
3.12.00	**CONTROL TRANSFORMERS**	
	1) Type	Dry / Cast Resin
	2) Voltage Ratio	415 / 110 V with taps ± 5% in steps of 2.5%
	3) Class of insulation	Class-B or better
	4) One minute power frequency withstand voltage	2.5 kV
	5) Rating	1.5 X Adequate for application.
3.13.00	**LIGHTING TRANSFORMER / WELDING TRANSFORMER**	
	1) Type & Rating	Dry type / 100 KVA(Welding TRF), 50KVA(Minimum)(Lighting TRF)
	2) Voltage Ratio	415/415V, +/- 5% taps in steps of 2.5%
	3) Class of insulation	B or better
	4) One minute power frequency withstand voltage	2.5 KV
	5) Enclosure protection	IP-42

3.14.00 **TRANSDUCERS**

1) Current transducers

a)	Input	0-1 A (CT secondary)
b)	Rated frequency	50 Hz
c)	Output	4-20 mA (2 Nos. decoupled)
d)	Over current	Transducer for motor current ammeters shall be capable of withstanding min. 6 times CT sec. current of 1A for a min period of 30 seconds
e)	Accuracy	1.0

2) Voltage Transducers

a)	Input	500 V, 50 Hz (for AC) / 250 V / 125 V DC (for DC)
b)	Output	4-20 mA (2 Nos. decoupled)
c)	Accuracy	1.0

3.15.00 **MCCB**

1)	Rated voltage	415V
2)	Rated insulation level	690V
3)	Rated ultimate & Service S.C. breaking capacity	50 kA
4)	Rated making capacity	105 kA
5)	Utilization category	A

3.16.00 **MPCB**

Rated voltage	415V
Rated insulation level	690V
Rated ultimate & Service S.C. breaking capacity	50 kA
Rated making capacity	105 kA
Utilization category	A

STANDARD MANUFACTURING QUALITY PLAN FOR MOTORS (UPTO 55 KW)

बीएचईएल BHEL	MANUFACTURER/ BIDDER/ SUPPLIER NAME & ADDRESS	STANDARD QUALITY PLAN .	SPEC. NO :	DATE:27.02.2020
		CUSTOMER :	QP NO.: PED-506-00-Q-006, REV-02	
		PROJECT:	PO NO.:	
		ITEM: AC ELECT. MOTORS UPTO 55KW (LV (415V)) / SYSTEM:	SECTION: II	SHEET 1 OF 2

Sl No.	Component & Operations	Characteristics	Class	Type of Check	Quantum Of check		Reference Document	Acceptance NORMS	FORMAT OF RECORD		AGENCY			
1	2	3	4	5	6		7	8	9	*	**			
					M	C/N				D	M	C	N	
1.0	ASSEMBLY	1.WORKMANSHIP	MA	VISUAL	100%	-	MFG. SPEC.	MFG. SPEC.	-DO-		P	-	-	
		2.DIMENSIONS	MA	-DO-	-DO-	-	MFG. DRG./ MFG. SPEC.	MFG. DRG./ MFG. SPEC.	-DO-		P	-	-	
		3.CORRECTNESS COMPLETENESS TERMINATIONS/ MARKING/COLOUR CODE	MA	VISUAL	100%	-	MFG.SPEC./	MFG.SPEC.	-DO-		P	-	-	
2.0	PAINTING	1.SHADE	MA	VISUAL	SAMPLE	-	MFG. SPEC/ APPROVED DATASHEET	SAME AS COL.7	LOG BOOK		P	-	-	
3.0	TESTS	1.ROUTINE TEST INCLUDING SPECIAL TEST	MA	-DO-	100%	100%	IS-325 / IS-12615/ APPROVED DATA SHEET	SAME AS COL.7	TEST/ INSPN. REPORT		P	W	W	NOTE -1 & NOTE-2
		2.OVERALL DIMENSIONS & ORIENTATION	MA	MEASUREMENT & VISUAL	100%	100%	APPROVED DRG/DATA SHEET	APPROVED DRG/DATA SHEET	TEST/ INSPN. REPORT		P	W	W	NOTE -1 & NOTE-2

BHEL					
ENGINEERING			QUALITY		
	Sign & Date	Name		Sign & Date	Name
Prepared by:	27/3/2020	Hema K.	Checked by:	27/3/20	KUNAL GANDHI
Reviewed by:	02/3/2020	P. Dutta	Reviewed by:		

BIDDER/ SUPPLIER	
Sign & Date	
Seal	

FOR CUSTOMER REVIEW & APPROVAL			
Doc No:			
	Sign & Date	Name	Seal
Reviewed by:			
Approved by:			

बीएचईएल BHEL	MANUFACTURER/ BIDDER/ SUPPLIER NAME & ADDRESS	STANDARD QUALITY PLAN	SPEC. NO :	DATE:27.02.2020
		CUSTOMER :	QP NO.: PED-506-00-Q-006, REV-02	
		PROJECT:	PO NO.:	
		ITEM: AC ELECT. MOTORS UPTO 55KW (LV (415V)) / SYSTEM:	SECTION: II	SHEET 2 OF 2

Sl No.	Component & Operations	Characteristics	Class	Type of Check	Quantum Of check		Reference Document	Acceptance NORMS	FORMAT OF RECORD		AGENCY			
1	2	3	4	5	6		7	8	9	*	**			
					M	C/N				D	M	C	N	
		3.NAMEPLATE DETAILS	MA	VISUAL	100%	100%	IS-325 / IS-12615 / APPROVED DATA SHEET	SAME AS COL.7	TEST/ INSPN. REPORT		P	W	W	
4.0	PACKING	SURFACE FINISH & COMPLETENESS	MA	VISUAL	100%	100%	AS PER MFG. STANDARD / APPROVED PACKING DRAWING.(#)	AS PER MFG. STANDARD / APPROVED PACKING DRAWING.(#).	INSPC. REPORT		P	W	-	(#) APPLICABLE FOR EXPORT JOBS

NOTES:

1 ROUTINE TESTS ON 100% MOTORS SHALL BE DONE BY THE VENDOR. HOWEVER, BHEL/CUSTOMER SHALL WITNESS ROUTINE TESTS ON RANDOM SAMPLES. THE SAMPLING PLAN SHALL BE MUTUALLY AGREED UPON

2 FOR EXHAUST/VENTILATION FAN MOTORS OF RATING UPTO 1.5KW , ONLY ROUTINE TEST CERTIFICATES SHALL BE FURNISHED FOR SCRUTINY.

3 IN CASE TEST CERTIFICATES FOR THESE TESTS ON SIMILAR TYPE, SIZE AND DESIGN OF MOTOR FROM INDEPENDENT LABORATORY ARE AVAILABLE, THESE TEST MAY NOT BE REPEATED.

4 BHEL RESERVES THE RIGHT TO PERFORM REPEAT TEST, IF REQUIRED.

5 AFTER PACKING AND PRIOR TO ISSUE MDCC, PHOTOGRAPHS OF ITEMS TO BE DESPATCHED SHALL BE SENT TO BHEL FOR REVIEW.

6 IN CASE , ANY CHANGES IN QP COMMENTED BY CUSTOMER AT CONTRACT STAGE SHALL BE CARRIED OUT BY BIDDER WITHOUT ANY IMPLICATION TO BHEL/ CUSTOMER.

LEGENDS:

*RECORDS, INDENTIFIED WITH "TICK"(√) SHALL BE ESSENTIALLY INCLUDED BY SUPPLIER IN QA DOCUMENTATION,
** **M**: SUPPLIER/ MANUFACTURER/ SUB-SUPPLIER, **B**: MAIN SUPPLIER/ BHEL/ THIRD PARTY INSPECTION AGENCY, **C**: CUSTOMER,
P: PERFORM, **W**: WITNESS, **V**: VERIFICATION, AS APPROPRIATE
MA: MAJOR, **MI**: MINOR, **CR**: CRITICAL
D: DOCUMENT

BHEL					
ENGINEERING			QUALITY		
	Sign & Date	Name		Sign & Date	Name
Prepared by:	2/3/2020	Hema K.	Checked by:	2/3/20	KUNAL GANDHI
Reviewed by:	02/3/2020	P. Dutta	Reviewed by:		

BIDDER/ SUPPLIER	
Sign & Date	
Seal	

FOR CUSTOMER REVIEW & APPROVAL			
Doc No:			
	Sign & Date	Name	Seal
Reviewed by:			
Approved by:			

CABLE SCHEDULE FORMAT

UNITCABLENO	FROM	TO	PURPOSE	CABLE SCOPE (BHEL PEM/ VENDOR)	REMARKS	CABLESIZE	PATHCABLENO	TENTATIVE CABLE LENGTH

	2X660 MW KHURJA STPP TECHNICAL SPECIFICATION FOR ELEVATOR DATASHEET A	SPECIFICATION No: PE-TS-475-502-A001 SECTION IC REV. 00 APR 2021

SECTION – IC

DATASHEET A

	2X660 MW KHURJA STPP TECHNICAL SPECIFICATION FOR ELEVATOR DATASHEET A	SPECIFICATION No: PE-TS-475-502-A001 SECTION IC REV. 00 APR 2021

DATASHEET A

S. No.	DESCRIPTION	PASSENGER ELEVATOR	
1.	Elevator	**TG building**	**Service building**
2.	Type of Service	**As per cl. no. 2.0.1 of section- IA Page no. 10**	
3.	Rated Load on Elevator		
4.	Quantity		
5.	Rated Speed of Lift		
6.	Total Travel		
7.	Nos. of floors to be served		
8.	Method of control.	ACVVVF Control with automatic level adjustment.	
9.	Position of Machine Room	Directly above the lift Shaft.	
10.	Car enclosure construction, design and finish car.	SS -304, min 1.5 mm thick. Sheet for TG building elevator and Service building elevator.	
11.	Design, construction, installation codes including car size, door size, Shaft size, Size of platform and car entrance.	As per IS: 14665 (all parts), latest edition	
12.	Car and landing door	Protected by central opening sliding stainless steel door (Horizontal bi-parting door).	
13.	Car Flooring	Vitrified ceramic tiles of mat finish.	
	Car roof	Car roof shall be covered with sheet metal and shall be provided with LED light fitting & a three pin plug 5/15A, socket with switch on top of lift car.	
14.	Operation	Automatic simplex collective with and without attendant with provision for locking control in “auto” or “Attendant” position. Key type lock switch shall be provided.	
15.	Signal	Car position indicator in car, car position indicator at car floors, telltale lights at all floors, battery operated alarm bell and emergency light with suitable battery, battery charger and controls, Remote alarm shall be provided.	
16.	Method of operation of car and landing doors.	Power operated with automatic door opening and closing devices.	
17.	Lighting & fan	One cabin fan, two LED light fittings on car roof. Lux level: 100 min. LED lighting with a 5A socket shall be provided at every 3 meters’ interval in lift well/ hoist way. Light and fan in the Car enclosure shall be separate switch control.	
18.	Power supply: a) Power b) Lighting & fan	415 Volts, (+/- 10% variation), 3 Phase, 50 Hz (+3% to -5% variation), combined voltage variation 10%, 3 wire system, 240 Volts, 1 Phase, 50 c/s.	
19.	Other requirements	Internal telephone wiring and telephone hand set to be provided. The external connection shall be provided by Customer. Also, automatic rescue device shall be provided.	
20.	Additional requirements :-		
a)	Isolating cushion between car and car	Type of cushion shall be rubber pad or spring which	

	2X660 MW KHURJA STPP TECHNICAL SPECIFICATION FOR ELEVATOR DATASHEET A	SPECIFICATION No: PE-TS-475-502-A001 SECTION IC REV. 00 APR 2021

	frame shall be provided.	shall be as per manufacturer's standard.
b)	Three pin plug with socket on car top	5/15A, 3 pin plug socket with switch on top of lift car and inside shaft to take care maintenance requirement.
c)	Car frame Material and type of construction	Steel and bolted construction
d)	Landing Door	Fire rated for min. 2 hours.
e)	Type of operation	- Automatic. - The door of car and landing shall be interlocked in such a way opening and closing of two doors shall be simultaneous and the doors will open when the lift is in lading zone.
f)	Door hanger tracks along with accessories shall be provided.	Required
g)	Safety shoes complete with accessories shall be provided.	Yes
h)	Safety device for door operation shall be provided.	Full length Infrared light curtain along with pressure limiter as an extra mechanical safety is required.
i)	Handrails on three sides of car	Mirror finish stainless steel
j)	False ceiling	SS 304.
k)	Emergency stop switch	Yes.
l)	Braille switch	Yes.
21.	Control and operation	
	(a)Type of control	Simplex / duplex
	(b)Type of drive	Variable voltage variable frequency drive
22.	Car operating panel	Provided
	(a)Type of construction	Partial Height car operating panel (COP), Removable type from Car with SS face plate.
	(b)Push Buttons	Luminous push buttons with IP 54
23.	Car position indicator	Provided.
	(a)Type of construction	As per manufacturer's standard
	(b)Type of display	7 segment LED display.
24.	Push button station and call registered tell-tale lights at each landing	Provided in each landing
	(a)Type of construction	Box type with SS face plate
	(b)Push Buttons	Luminous push buttons with IP 54
25.	Apron / Facia Plate provided as per IS 14665	Yes (To be provided by supplier)
26.	Emergency Light	Required.
27.	Terminal buffers, their types and number of buffers	Spring buffers shall be Provided as per IS 14665.
28.	Load plate	As per manufacturer's standard / as applicable
29.	Counter weights frame	Fabricated Steel Construction
30.	Counter weight fillers	Cast Iron
31.	Number of Limit Switches	As per requirement
	a) Location	Bottom & top terminal
	b) Type	Electromechanical
	c) Operation	Cam Operated
32.	Controller and type	Selective Collective Controller with variable voltage variable frequency drive and Microprocessor based software controlled logic system

	2X660 MW KHURJA STPP TECHNICAL SPECIFICATION FOR ELEVATOR DATASHEET A	SPECIFICATION No: PE-TS-475-502-A001 SECTION IC REV. 00 APR 2021

33.	Reverse phase relay and other protective devices	Required
34.	Car Safety & Governor	
	a) Stopping distance	As per IS:14665
	b) Type and mode of operation of Over speed Governor device	Centrifugal action
	c) Tripping speed and design code conforming to	As per IS 14665 (latest addition).
	d) Location	At machine room.
35.	Motor details	
	(a) Type	3 phase AC squirrel Cage Induction motor
	(b) Type of Duty	Lift Duty
	(c) Motor Duty	S4 /S5
	(d) Duty Cycle of Motor	40%
	(e) Applicable standard	IS:325
	f) No. Of Starts Per Hour	Elevator Motor shall be suitable for minimum of 150 Starts per hour.
	g)Direction of rotation	Both Clockwise & Anticlockwise
	h)Class of Insulation	F, temp rise limited to class B. Motor shall be provided with thermal class 130 (B) or better insulation.
	i)Method of Starting	AC Variable Voltage Variable Frequency Drive
36.	Door Motor	
	a) Equipment driven by Motor	Door
	b) Direction of rotation	Both Clockwise & Anticlockwise
	c) Type of enclosures	IP54
37.	Metallic Wire Mesh between Car & Counter Weight	Required
38.	Fire Man Switch	Required
39.	Sound Reducing Material	Isolation Rubber / other arrangement in the Machine shall be provided
40.	Automatic Rescue Device (Battery Drive)	Provided
41.	Trailing cables	FRLS type.
42.	Design seismic coefficient (an additional information for elevator building only)	According to IS 1893 - 1977
43.	Split Air condition in machine room	As per Machine room area (not less than 2T Capacity).
44.	1/2 Kg CO2/suitable type Fire extinguisher with fixing arrangement.	Provided.

SECTION – IIA

STANDARD TECHNICAL REQUIREMENT-ELECTRICAL

The Supplier shall have a permanent representative office with a trained and skilled support staff, in the country where the goods are delivered, in order to prove his commitment for local support and to provide a channel for communication.

The engineers employed by the Supplier's regional office shall be certified by the Manufacturer and provide start-up service including physical inspection of the drive, connected wiring and final adjustments, to ensure that the AC Drive meets the required performance.

The Supplier shall be able to give basic drives training to the Customer's engineers, preferably on the site. The training shall, as a minimum, include system concepts and basic troubleshooting.

2.0 Basic requirements for the AC Drives

2.1 General requirements

The AC Drive shall comply with National (country of origin) and International standards and the recommendations for electrical industrial control devices (IEC, EN, UL, NFC, and VDE).

The AC Drive shall be of the most modern design, yet user friendly and be simple to install commission and maintain. The AC Drive shall be able to start and control the speed of a standard squirrel cage induction AC motor. The AC Drives shall be: CE marked, conforming to European Low Voltage (73/23/CEE and 93/68/CEE) and EMC (89/336/CEE) Directives, UL/CSA marked according to UL 508C.

The AC Drives have to be built to comply with the IEC standards.

The AC Drive shall be a digitally controlled drive, using, at least, the Pulse Width Modulation (PWM) with flux vector control open loop (for travel) and closed loop (for hoist). It shall have diodes / thyristors in rectifier and IGBT's in the inverter section in their entire power range, and it shall have the following minimum specifications.

Rated Input Voltages	380V to 480V (-10% to +10% variation), three-phase
Rated Input Frequency	50Hz +3 % to - 5%
Output Voltage	0 – Input voltage, three-phase
Output Frequency Range	0 to 400 Hz
Acceleration / Deceleration Time	0.01 – 999s, adjustable, linear, with S, with U or customised shapes

Overload capability (Constant Torque)	150% of nominal current for 1min.
Operating ambient Temperature	-10°C up to 50°C(shall be de-rated suitably if not rated at 50°C)
Storage ambient Temperature	-25°C up to 70 °C
Maximum operating altitude	1000 m without de-rating, 1000…3000 (shall be de-rated suitably)
Max. Relative Humidity	95 %, without condensation and dripping water.
Main Protections	Over current, short circuit between phase, short circuit between phase and ground, input phase loss, output phase loss, motor overload, over speed, over voltage, under voltage, drive over temperature

The AC Drive shall be able to give a 100 % output current continuously in the above specified conditions. In order to ensure that the drive can provide the required output current in the specified ambient conditions, the Manufacturer shall inform the required de-rating, if the ambient temperature given in the project-specific specification is higher than rated ambient of the drive or if the installation altitude is more than 1000 m above the sea level. The de-rating factor shall be specified so that neither the lifetime of the AC Drive nor the unit's performance, overload capability included, nor the reliability of the AC Drive shall suffer.

Suitable encoder shall be provided for main hoist motion.

3.0 User interface

3.1 General

The user interface shall be identical throughout the power range and type to avoid confusion amongst the users and need for training in several different units.

3.2 Inputs and outputs

A. At least, the following standard Inputs and Outputs shall be provided, to be used in interface with the control system:

Analogue Inputs : 1 x Programmable differential voltage input ± 10V,
1 x Programmable current input 0(4) - 20mA
1 x Programmable voltage input 0 – 10V

Analogue Output : 1 x Programmable analogue outputs 0(4) - 20mA or 0 – 10V

Logic inputs : 6 x Programmable logic Inputs isolated from the mains

Relay Outputs : 2 x Programmable Digital outputs with a changeover dry contact

All the control terminals shall be clearly marked.

B. At least, it shall be possible to assigned the following functions to the I/Os:

Analogue input	**Analogue outputs**
Speed reference Summing reference	Motor current Motor frequency Motor torque Motor power
Logic input	**Relay or logic outputs (open collector)**
Forward Reverse Jog Preset speeds Reference switching Ramp switching Parameter sets selection Fast stop Freewheel stop + speed - speed External fault	Ready Drive running High speed attained Drive fault Frequency threshold attained Motor thermal state attained Torque or current limitation attained Brake control

3.4 Programming terminal

A. The AC drive shall have a keypad /display for programming and controlling purposes. An IP54 or IP65 remote mounting shall be possible at a distance of 10m.

B. Password protection shall be provided to avoid unauthorized tampering with the set parameters.

C. The programming terminal shall be able to display the commercial reference of the AC drive and of the options, the software version, the serial number

D. Direct keypad entry shall be provided to observe the following actual parameters. Any one of the following parameters or actual values shall be selected to be always displayed:

i) Input Voltage
ii) Input Frequency
iii) Output Frequency

iv) Output Power
v) Output Current
vi) Motor Speed

The following parameters shall always be displayed during normal operation:-

i) Drive Status

The following drive control functions at least shall be available from the keypad:-

i) Run
ii) Stop
iii) Local / Remote selection.
iv) Forward/Reverse (if function enabled)
v) Accelerate
vi) Decelerate
vii) Parameter setting

3.5 Application programming

The AC Drive shall be designed for both simple and the most complicated applications, yet it shall be user friendly. It shall be possible to reset the parameter settings back to the original factory settings through the keypad.

3.6 PC Tools

The AC Drive Supplier shall have Windows based PC software available for monitoring and controlling the AC Drives, and the software shall be offered as an option. The software shall be supplied with the necessary hardware and a provision for connecting a PC with the AC Drives. It shall be possible to set and modify parameters, control the drive, read actual values and make trend analysis using the software.

4.0 Software features

A. Restart

In the event of a fault trip due to over voltage, over current or loss of analogue signal, the AC DRIVE shall be programmable to attempt an automatic restart. For safety reasons, the maximum number of attempts shall be within a selectable time. If the fault does not clear after the attempts, the drive shall lock out.

B. Brake logic control

The AC Drive shall have a built-in function to control a mechanical brake in order to move the load in a smooth and safe way. The brake logic control shall be adapted to the different movements: hoisting, travel, orientation.

5. Preferred makes:

As per List of makes –ANNEXURE-I

SECTION III

1. DOCUMENTS TO BE SUBMITTED ALONG WITH BID
2. PRE-BID CLARIFICATION SCHEDULE
3. COMPLIANCE CUM CONFIRMATION CERTIFICATE
4. ELECTRICAL LOAD LIST

DRAWINGS / DOCUMENTS TO BE SUBMITTED WITH THE BID

Bidder shall submit the following drawings / documents along with their bid:

a) Deviation schedule with reference to specific clauses of the specification along with reason for such deviation in the 'Deviation Schedule' (Cost of withdrawal) format as attached in GCC.

b) Un-priced copy of price format indicating quoted/ not quoted against each row/column

c) Copy of pre-bid clarifications/ amendment/ corrigendum issued by BHEL, if any, duly signed & stamped

d) Signed/ Stamped copy of Compliance cum Confirmation Certificate

OFFER WILL BE CONSIDERED AS INCOMPLETE IN ABSENCE OF ANY OF ABOVE DOCUMENTS. DOCUMENT OTHER THAN ABOVE, IF ANY, SUBMITTED WITH THE OFFER WILL NOT FORM PART OF CONTRACT AND WILL NOT BE CONSIDERED FOR BID EVALUATION.

PRE-BID CLARIFICATION SCHEDULE

S. NO.	SECTION/CLAUSE/PAGE NO.	STATEMENT OF THE REFERRED CLAUSE	CLARIFICATION REQUIRED

The bidder hereby clarifies that above mentioned are the only clarifications required on the technical specification for the subject package.

Signature: _____

Name: _____

Designation: _____

Company: _____

Date: _____

Company Seal

COMPLIANCE CUM CONFIRMATION CERTIFICATE

The bidder shall confirm compliance with following by signing / stamping this compliance certificate (every sheet) and furnish same with the offer.

a)The scope of supply, technical details, construction features, design parameters etc. shall be as per technical specification & there are no exclusions, other than those mentioned under "exclusion and those resolved as per 'Schedule of Deviations', with regard to same.

b)There are no other deviations w.r.t. specifications other than those furnished in the 'Schedule of Deviations'. Any other deviation, stated or implied, taken elsewhere in the offer stands withdrawn unless specifically brought out in the 'Schedule of Deviations'

c) Bidder shall submit QP in the event of order based on the guidelines given in the specification & QP enclosed therein. QP will be subject to BHEL / CUSTOMER approval & customer hold points for inspection / testing shall be marked in the QP at the contract stage. Inspection / testing shall be witnessed as per same apart from review of various test certificates/ Inspection records etc. This is within the contracted price without any extra implications to BHEL after award of the contract.

d)All drawings/ data-sheets / calculations etc. submitted along with the offer shall not be taken cognizance off.

e) The offered materials shall be either equivalent or superior to those specified in the specification & shall meet the specified / intended duty requirements. In case the material specified in the specifications is not compatible for intended duty requirements then same shall be resolved by the bidder with BHEL during the pre-bid discussions, otherwise BHEL / Customer's decision shall be binding on the bidder whenever the deficiency is pointed out.

For components where materials are not specified, same shall be suitable for intended duty, all materials shall be subject to approval in the event of order.

f) The commissioning spares shall be supplied on 'As Required Basis' & prices for same included in the base price itself.

g) All sub vendors shall be subject to BHEL / CUSTOMER approval in the event of order.

h) Guarantee for plant/equipment shall be as per relevant clause of GCC / SCC / Other Commercial Terms & Conditions

i) In the event of order, all the material required for completing the job at site shall be supplied by the bidder within the ordered price even if the same are additional to approved billing break up, approved drawing or approved Bill of quantities within the scope of work as tender specification. This clause will apply in case during site commissioning, additional requirements emerges due to customer and / or consultant's comments. No extra claims shall be put on this account

j) Schedule of drawings submissions, comment incorporations & approval shall be as stipulated in the specifications. The successful bidder shall depute his design personnel to BHEL's / Customer's / Consultant's office for across the table resolution of issues and to get documents approved in the stipulated time.

k) As built drawings shall be submitted as and when required during the project execution.

l) The bidder has not tempered with this compliance cum confirmation certificate and if at any stage any tempering in the signed copy of this document is noticed then same shall be treated as breach of contract and suitable actions shall be taken against the bidder.

m) Successful bidder shall furnish detailed erection manual for each of the equipment supplied under this contract at least 3 months before the scheduled erection of the concerned equipment / component or along with supply of concerned equipment / component whichever is earlier.

n) Document approval by customer under Approval category or information category shall not absolve the vendor of their contractual obligations of completing the work as per specification requirement. Any deviation from specified requirement shall be reported by the vendor in writing and require written approval. Unless any change in specified requirement has been brought out by the vendor during detail engineering in writing while submitting the document to customer for approval, approved document (with implicit deviation) will not be cited as a reason for not following the specification requirement.

o) In case vendor submits revised drawing after approval of the corresponding drawing, any delay in approval of revised drawing shall be to vendor's account and shall not be used as a reason for extension in contract completion.

LOAD TITLE	RATING (KW)		UNIT (U)/STN (S)	Nos.		VOLTAGE CODE*	FEEDER CODE**	EMER. LOAD (Y)	CONT.(C)/ INTT.(I)	STARTING TIME >5 SEC (Y)	LOCATION	BOARD NO.	CABLE		BLOCK CABLE DRG. No.	CONTROL CODE	REMARKS	LOAD No.
	NAME PLATE	MAX. CONT. DEMAND (MCR)		RUNNING	STANDBY								SIZE CODE	NOs				
1	2	3	4	5	6	7	8	9	10	11	12	13	14	15	16	17	18	19
TG HALL ELEVATOR																		
ELEVATOR MOTOR	16.5		S	1	0	D	S	-	C		TG HALL Elevator Machine room							
2 T A/C FOR TG HALL M/C ROOM AND LIGHTING FOR ELEVATOR M/C ROOM & SHAFT AND MAINTENANCE AND INSTALLATION REQUIREMENT.	7		S	1	0	D	S	-	C		TG HALL Elevator Machine room							
SERVICE BUILDING ELEVATOR																		
ELEVATOR MOTOR	16.5		S	2	0	D	S	-	C		Each Elevator Machine room of Service Building.							
2 T A/C FOR SERVICE BUILDING ELEVATOR M/C ROOM AND LIGHTING FOR ELEVATOR M/C ROOM & SHAFT AND MAINTENANCE AND INSTALLATION REQUIREMENT	7		S	2	0	D	S	-	C		Each Elevator Machine room of Service Building.							

Note:

1) No other single phase or 3 phase supply shall be provided for elevator erection / operation etc.
2) Only two (3 phase) supply feeders per elevator shall be provided one feeder shall be dedicated to elevator motor and other 3 phase supply feeder shall be provided by BHEL for air conditioner, machine room and shaft lighting and maintenance / installation requirement. Bidder to consider CT in their scope for stepping down the voltage as per their requirement.

Bidder to note: Feeder of indicated rating shall be provided by BHEL. If motor rating is lesser than the provided feeder rating, bidder shall provide protection against over current

NOTES:

1. COLUMN 1 TO 12 & 18 SHALL BE FILLED BY THE REQUISITIONER (ORIGINATING AGENCY); REMAINING COLUMNS ARE TO BE FILLED UP BY PEM (ELECTRICAL)
2. ABBREVIATIONS : * VOLTAGE CODE (7):- (ac) A=11 KV, B=6.6 KV, C=3.3 KV, D=415 V, E=240 V (1 PH), F=110 V (DC): G=220 V, H=110 V, J=48 V, K=+24V, L=-24 V
   : ** FEEDER CODE (8):- U=UNIDIRECTIONAL STARTER, B=BI-DIRECTIONAL STARTER, S=SUPPLY FEEDER, D=SUPPLY FEEDER (CONTACTER CONTROLLED)

भी एच ई एल BHEL	LOAD DATA (ELECTRICAL)	JOB NO.	475	ORIGINATING AGENCY		PEM (ELECTRICAL)
		PROJECT TITLE	2X660 MW KHURJA STPP	NAME		DATA FILLED UP ON
		SYSTEM / S	ELEVATOR	SIGN.		DATA ENTERED ON
		DEPTT. / SECTION	MAUX / MH	SHEET 1 OF 1	REV. 00	DE'S SIGN. & DATE