BHEL Tenders

Government eProcurement System

Tender Details

Date : 03-Sep-2024 03:49 PM

Print

Basic Details

Organisation Chain	Bharat Heavy Electricals Limited||HEP - Bhopal||Transportation||354 - Material MGT-Tract. Machines		
Tender Reference Number	E5143137, RATE CONTRACT FOR SHORT CIRCUIT RING		
Tender ID	2024_BHEL_39599_1	**Withdrawal Allowed**	Yes
Tender Type	Open Tender	**Form of contract**	Supply
Tender Category	Goods	**No. of Covers**	2
General Technical Evaluation Allowed	No	**ItemWise Technical Evaluation Allowed**	No
Payment Mode	Not Applicable	**Is Multi Currency Allowed For BOQ**	No
Is Multi Currency Allowed For Fee	No	**Allow Two Stage Bidding**	No

Cover Details, No. Of Covers - 2

Cover No	Cover	Document Type	Description
1	Fee/PreQual/Technical	.pdf	SINED COPY OF NIT
		.pdf	SIGNED COPY OF REQUIRED DOCUMENTS AGAINST TECHNICAL PQR
		.pdf	DULY FILLED ANNEXURE-IX
		.pdf	UDYAM REGISTRATION CERTIFICATE FOR MSE BIDDER
		.pdf	DULY FILLED FORMAT FOR TECHNOCOMMERCIAL ANNEXURE
		.pdf	SIGNED COPY OF BHEL GTC BP200102B
		.pdf	SELF CERTIFICATION REGARDING MINIMUM LOCAL CONTENT
		.pdf	SIGNED COPY OF PVC Annexure
2	Finance	.xls	BoQ

Tender Fee Details, [Total Fee in ₹ * - 0.00]

Tender Fee in ₹	0.00		
Fee Payable To	Nil	**Fee Payable At**	Nil
Tender Fee Exemption Allowed	No		

EMD Fee Details

EMD Amount in ₹	0.00	**EMD Exemption Allowed**	No
EMD Fee Type	fixed	**EMD Percentage**	NA
EMD Payable To	Nil	**EMD Payable At**	Nil

Click to view modification history

Work /Item(s)

Title	E5143137 RATE CONTRACT FOR SHORT CIRCUIT RING
Work Description	SHORT CIRCUIT RING DE AND NDE AS PER DRAWING 44454592005 REV 04

BHEL Tenders

Pre Qualification Details	Please refer Tender documents.				
Independent External Monitor/Remarks	NA				
Show Tender Value in Public Domain	No				
Tender Value in ₹		**Product Category**	Electrical Work/ Equipment	**Sub category**	NA
Contract Type	Rate Contract	**Bid Validity(Days)**	90	**Period Of Work (Days)**	365
Location	BHEL BHOPAL	**Pincode**	462022	**Pre Bid Meeting Place**	NA
Pre Bid Meeting Address	NA	**Pre Bid Meeting Date**	NA	**Bid Opening Place**	BHEL BHOPAL
Should Allow NDA Tender	No	**Allow Preferential Bidder**	No		

Critical Dates

Publish Date	03-Sep-2024 04:30 PM	**Bid Opening Date**	13-Sep-2024 06:30 PM
Document Download / Sale Start Date	03-Sep-2024 04:35 PM	**Document Download / Sale End Date**	13-Sep-2024 06:00 PM
Clarification Start Date	NA	**Clarification End Date**	NA
Bid Submission Start Date	03-Sep-2024 04:40 PM	**Bid Submission End Date**	13-Sep-2024 06:00 PM

Tender Documents

NIT Document

S.No	Document Name	Description	Document Size (in KB)
1	Tendernotice_1.pdf	NIT	371.34

Work Item Documents

S.No	Document Type	Document Name	Description	Document Size (in KB)
1	Tender Documents	SCRING.rar	TENDER DOCUMENTS IN RAR FILE	14633.96
2	BOQ	BOQ_41278.xls	BoQ	341.00

Bid Openers List

S.No	Bid Opener Login Id	Bid Opener Name	Certificate Name
1.	srishti1@bhel.in	SRISHTI TIRKEY	Srishti Tirkey
2.	manojdubey@bhel.in	MANOJ KUMAR DUBEY	Manoj kumar Dubey
3.	manendra1@bhel.in	Manendra Singh	Manendra Singh
4.	ranjana1@bhel.in	RANJANA PARTE	Ranjana Parte

GeMARPTS Details

GeMARPTS ID	JG3OF7JE9L5C
Description	S C RING
Report Initiated On	09-Aug-2024
Valid Until	08-Sep-2024

Tender Properties

Auto Tendering Process allowed	No	**Show Technical bid status**	Yes
Show Finance bid status	Yes	**Stage to disclose Bid Details in Public Domain**	Technical Bid Opening

ENQUIRY

TWO PART BID

E-TENDER

BPC 0007

भारत हैवी इलेक्ट्रिकल्स लिमिटेड, पिपलानी, भोपाल– ४६२०२२ (भारत)
सामग्री प्रबंधन विभाग
BHARAT HEAVY ELECTRICALS LIMITED, PIPLANI, BHOPAL–462022 (INDIA)
MATERIALS MANAGEMENT DIVISION
TIN NO- 23573000001 | ECC NO- AAACB4146PXM009 | MPCT NO- HEL/05/01/0001/S15/11/79
PHONE NO : 91-755-2500100 FAX : 91-755-2500023 www.bhel.com

ENQUIRY NO	E5143137
ENQUIRY DATE	03/09/24
ENQUIRY DUE DATE	13/09/24

E N Q U I R Y

545004/2024/HEP-MNX35408

SUPP NAME AND ADDRESS	SUPP CODE	REV CD	REV NO	REV DATE	NO OF CATY2	NO OF CATY3	ENQ NO OF ITEMS	INDENT NO
OFFICE COPY		1	0	NA	1	2	1	120541104

GUARANTEE CERTIFICATE	Y	SUPPLY CONDITION	SUPPLIER'S IDENTIFICATION MARK SHOULD BE ON EACH JOB.
TEST CERTIFICATE	Y		
INSTRUCTION BOOKLET	N	TECHNICAL CONDITION	AS PER PI
SAMPLE	N		
GATE PASS	Y	INSPECTION CONDITION	BY BHEL APPOINTED TPIA AT VENDOR WORKS

NOTE: QUOTE PRICE BOTH IN FIGURES & WORDS.IN CASE OF MISMATCH PRICE IN WORDS WILL BE VALID,QUOTATIONS NOT BEARING ENQUIRY NO AND DUE DATE LIABLE TO BE REJECTED.

SL NO	MATERIAL CODE	DESC	UNIT	ITEM QTY	QTY VR%	LOT NO	LOT QTY	DEST	DELIVERY DATE
1	BP9044721720	SHORT CIRCUIT RING (NDE & DE) AS PER DRAWING. 44454592005 REV. 04 AS PER QA PLAN NO.QTM/TXM/VENDOR/QAP/2016-17/IM 4507/ SHORT CIRCUIT RING (NDE & DE) REV.00 DT.13.10.2016	NO	160.000	30	1	80.000	205	27/10/24
						2	80.000	205	27/11/24

REMARK REFER NIT IN NIC E-TENDER PORTAL FOR DETAILS.

DRAWING Y **PURCH SPEC** Y **CATALOUGE** N **PLAN** Y **TWO PART BID** Y

SUPP CD.	SUPP NAME	MSME	STATUS	PMD	Cust Appr

S.NO	INDENT NO	ITEM NO	CATEGORY	ENQUIRY QTY.
1	120541104	1	120350	160.000

NOTE:BHEL,BHOPAL'S Standard Terms & Conditions BP200102 (Latest Revision) form a part of this Enquiry. Bidders may obtain from us copies of these terms and conditions if not already available.

SPECIAL REMARKS: Bid to be submitted through e-procurement. Refer eproc link on BHEL Bhopal B2B site.

NAME : SHRI MANOJ KUMAR DUBEY
DESG : ENGINEER
0755-2502379
manojdubey@bhel.in

SIGN & SEAL

Techno-Commercial Annexure

(To be filled by supplier and submit with offer)

Tender No.	**E5143137**
Description :	**RATE CONTRACT FOR SHORT CIRCUIT RING (NDE & DE) AS PER DRAWING. 44454592005 REV. 04 AS PER QA PLAN NO. QTM/TXM/VENDOR/QAP/2016-17/IM4507/ SHORT CIRCUIT RING (NDE & DE) REV.00 DT.13.10.2016** **TENDER QTY.: 160 Nos +/- 30%**

Sr. No.	ELEMENTS	Standards	To be offered/confirmed by supplier	Remarks, if any
1	Quotation reference no. & date	As per supplier		
2	HSN / SAC code	As per supplier		
3	Quotation currency	In INR		
4	Contact person	As per supplier		
5	Phone / Mobile	As per supplier		
6	E-Mail	As per supplier		
7	Order to be placed on (Also provide supplier code at BHEL Bhopal, If registered)	As per supplier		
8	Address	As per supplier		
9	Please specify delivery in weeks/ days (Specify item wise, lot wise as per RFQ)	As per NIT/ Accepted with deviation (If select Accepted with deviation, please mention the deviation)		
10	Rate quoted on "Firm" price basis	Yes		
11	Quoted for all the items of tender enquiry	Yes / No. (If "No" please mention item number of regreted items)		
12	Technical specifications	Accepted as per NIT / Accepted with deviation (If select Accepted with deviation, please mention the deviation)		
13	Inspection	As per NIT/ Accepted with deviation (If select Accepted with deviation, please mention the deviation)		
14	Test certificate & Gurantee certificate as per NIT, Drawings and specification will be submitted along with each consignment	Yes (In case of "No" your offer may be rejected).		
15	Brand name, if any.	As per supplier		
16	Supply from	As per supplier		
17	Terms of delivery ("FOR DESTINATION " means freight & insurance upto destination in supplier's scope (Destination: CRX Divn, BHEL Bhopal)	Accepted/ Accepted with deviation (If select Accepted with deviation, please mention the deviation)		
18	Transit insurance (In supplier's scope)	As per NIT/ Accepted with deviation (If select Accepted with deviation, please mention the deviation)		
19	CGST RATE (IN %)	As per supplier		
20	SGST RATE (IN %)	As per supplier		
21	IGST RATE (IN %)	As per supplier		
22	UGST RATE (IN %)	As per supplier		
23	Are you manufacturer of quoted item (s).	Yes / No		
24	Are you registered under MSMED ACT 2006 as small or micro. NOTE: - Firms registered under medium scale shall not be considered eligible for MSE benefits.	Yes / No (If select Yes, please enclosed valid UDYAM certificate)		

Techno-Commercial Annexure

(To be filled by supplier and submit with offer)

Tender No.		**E5143137**		
Description :		**RATE CONTRACT FOR SHORT CIRCUIT RING (NDE & DE) AS PER DRAWING. 44454592005 REV. 04 AS PER QA PLAN NO. QTM/TXM/VENDOR/QAP/2016-17/IM4507/ SHORT CIRCUIT RING (NDE & DE) REV.00 DT.13.10.2016** **TENDER QTY.: 160 Nos +/- 30%**		
Sr. No.	**ELEMENTS**	**Standards**	**To be offered/confirmed by supplier**	**Remarks, if any**
25	Terms of Payment (100% payment in 90 days of receipt (45 days for MSE including Udyam registered suppliers as per relevant act in force), subject to acceptance of material and relevant documents at BHEL. PI refer GTC BP200102B)	As per NIT/ Accepted with deviation (If select Accepted with deviation, please mention the deviation)		
26	SELF CERTIFICATION OF MINIMUM LOCAL CONTENT, IF MORE THAN 50% VALUE ADDITION IS IN INDIA. (Note- In case of tenders worth more than Rs. 10 crores, Suppliers shall necessarily submit certificate from statutory auditor or cost auditor or cost accountant or CA) Please also specify the amount of local content in India. EXAMPLE :if 100% INDIGENOUS (MADE IN INDIA) MARK "Y"/100%	As per supplier		
27	Details of location of value addition / manufacturing	As per supplier		
28	Other Charges (If any)	Applicable / Not Applicable. (If applicable please mention percentage (%) / Value (along with type of charges).		
29	Penalty for delayed performance as per BP200102B	Yes / No (In case of "No", your offer will be loaded suitably)		
30	Confirmation that documents pertaining to technical PQR & Financial PQR (if any) has been submitted	Yes / No		
31	Acceptance to "REVERSE AUCTION" if conducted (As per BHEL's RA policy)	Yes / No		
32	Submission of Declaration format with duly sealed & signed (Annexure IX, refer attached) regarding whether other family firms or sister concern affiliates / subsidiary firms are participating in the same tender.	(Yes / No) If No please specify the reason.		
33	General terms and conditions of enquiry (Form No. BP-200102B) and BHEL PO Terms & Conditions is Acceptable.	Yes (In case of "No" your offer may be rejected).		
34	Quotation Validity will be 90 days from the date of techno-commercial bid opening.	Yes		
35	Tender fees submitted	Yes / Not Applicable	Not Applicable	

TENDER DETAILS

ENQUIRY NO. – E5143137, DUE ON 13-09-2024.

Description: RATE CONTRACT FOR SHORT CIRCUIT RING (NDE & DE) AS PER DRAWING. 44454592005 REV. 04 AS PER QA PLAN NO.QTM/TXM/VENDOR/QAP/2016-17/IM4507/ SHORT CIRCUIT RING (NDE & DE) REV.00 DT. 13.10.2016.

TENDER QTY: 160 Nos +/- 30%

DELIVERY REQUIREMENT - FOR THE 1ST LOT OF 80 NOS. SCHEDULED DELY. DT. SHALL BE WITHIN 60 DAYS FROM THE PO DT. & THEREAFTER SUBST. LOT OF 80 NOS. SCHEDULED DELY.DT.SHALL BE WITHIN 30 DAYS FROM THE SCHEDULED DELY.DT.OF THE PREV.LOT.

IT IS HEREBY MENTIONED THAT THIS IS E-TENDER SO OFFER SUBMITTED THROUGH E-PROCUREMENT PORTAL (www.eprocurebhel.co.in) SHALL ONLY BE CONSIDERED.

NOTE: ALL THE TERMS OF SUBJECT TENDER SHALL BE IN ACCORDANCE WITH "GENERAL TERMS AND CONDITIONS TO ENQUIRY BP 200102B". VENDORS ARE REQUIRED TO COMPLY AFORESAID ENQUIRY TERMS OF BHEL.

1) RATE CONTRACT TERMS: WE INTEND TO ENTER INTO RATE CONTRACT FOR ORDERING UPTO 12 (TWELVE) MONTHS FROM RC FREEZING DATE.
2) NO. OF BID PARTS: 2 (TWO)
3) DELIVERY TERMS: F.O.R. DESTINATION
4) DELIVERY AT: CRX, BHEL, BHOPAL- 462022
5) VALIDITY OF OFFER: 90 DAYS FROM TECHNICAL BID OPENING DATE
6) PRICE BASIS: PVC APPLICABLE AS PER ATTACHED PVC ANNEXURE.
7) BHEL STANDARD PAYMENT TERMS: 100% payment in 90 days of receipt (45 days for MSE including UDYAM registered suppliers as per relevant act in force), subject to acceptance of material and relevant documents at BHEL. Pl refer GTC BP200102B
8) PENALTY: APPLICABLE, AS PER ATTACHED GTC BP 200102B.
9) INSPECTION CONDITION: BY BHEL APPOINTED TPIA AT VENDOR WORKS
10) SUPPLY CONDITION: IDENTIFICATION MUST
11) TECHNICAL CONDITION: AS PER PQR, DRAWING, SPECIFICATION, QAP ETC ATTACHED
12) GUARANTEE CERTIFICATE: YES
13) TEST CERTIFICATE: YES
14) SAMPLE: NO
15) TOOLS / GAUGES / FIXTURES CONDITION: NA
16) EVALUATION CRITERIA: OVERALL L1 BASIS
17) SPLITTING OF ORDER: NO. HOWEVER, DISTRIBUTION IN COMPLIANCE WITH LATEST GUIDELINES FOR MSE AND MII WILL BE FOLLOWED FURTHER

18) TENDER FEE: NOT APPLICABLE

19) REVERSE AUCTION: APPLICABLE

20) EVALUATION CURRENCY: SHALL BE **INR.**

21) QTY. VARIATION: QTY. IS TENTATIVE & MAY VARY UPTO +/-30%

22) QAP: APPLICABLE AS PER ATTACHED QA PLAN.

23) ADDITIONAL TENDER REMARKS:

ENQUIRY IS FOR RATE CONTRACT WHICH IS TO BE KEPT VALID FOR ORDERING UPTO 12 MONTHS FROM RC FREEZING DATE FOR ORDERING. ORDERING WILL BE DONE AGAINST FIRM REQURIEMENT AS & WHEN NEEDED AND RC MAY BE CLOSED AT ANY TIME WITHOUT ASSIGNING REASONS WHATSOEVER IT MAY BE.

SUBMIT YOUR TENDER IN TWO PART BID BASIS.

ANNEXURE-IX OF NIT TO BE DULY FILLED / SIGNED & SHOULD FORM PART OF TECHNO-COMMERCIAL OFFER.

SPECIAL / GENERAL TERMS & CONDIOTIONS OF ENQUIRY, RA TERMS AND CONDITIONS AS PER NEW GUIDELINES, PQR ETC. ARE ENCLOSED.

INTEGRITY PACT –Not applicable

UNREGISTERED VENDORS ARE REQUESTED TO SUBMIT THE REQUISITE DOCUMENTS FOR REGISTRATION BY BHEL ONLINE REGISTRATION PORTAL (https://supplier.bhel.in).

SPECIAL CONDITIONS OF NIT:

1. For this procurement, Public Procurement (Preference to Make in India) Order (PPP-MII Order), 2017 vide No. P-45021/2/2017-B.E.-II dated 15.06.2017, 28.05.2018, 29.05.2019 & 04.06.2020 and subsequent Orders issued by the respective Nodal Ministry shall be applicable even if issued after issue of this NIT but before finalization of contract / PO / WO against this NIT.

2. Technical Pre-Qualification Requirements (PQR) for procurement of Item: Technical PQR for "SHORT CIRCUIT RING (NDE & DE)"– 160 Nos, +/- 30% is attached as a part of NIT. The same is to be followed and complied with Duly filled & signed PQR shall be submitted along with the offer along with desired documents as per PQR.

3. FINANCIAL PQR IS APPLICABLE: Not applicable.

4.1 . Integrity Pact (IP)- Not Applicable**.**
4.2 -DULY FILLED INTEGRITY PACT FORMAT – Not applicable.

5. Offers of suppliers who are in 'Hold/Banned' status in BHEL Bhopal PMD shall not be considered.

6. ANY DEVIATION OF GTC BP200102B (GENERAL TERMS & CONDITIONS OF ENQUIRY ATTACHED) WHERE VENDOR RESPONSE IS NOT AFFIRMATIVE TO BE CLEARLY INDICATED, ELSE BHEL WILL CONSIDER THAT ALL THE TERMS & CONDITIONS OF GTC BP200102B ARE ACCEPTABLE TO VENDORS.

7. IDENTIFICATION MUST AS PER TENDER TECHNICAL (DRAWING, SPECIFICATION ETC.) TERMS. REJECTION CLAUSE APPLICABLE AS PER GTC BP 200102B.

8. EVALUATION IN CASE OF MORE THAN ONE L-1 BIDDER:
IN THE COURSE OF EVALUATION, IF MORE THAN ONE BIDDER HAPPENS TO OCCUPY L-1 STATUS, EFFECTIVE L-1 WILL BE DECIDED BY SOLICITING DISCOUNTS FROM THE RESPECTIVE L-1 BIDDERS.

IN CASE MORE THAN ONE BIDDER HAPPENS TO OCCUPY THE L-1 STATUS EVEN AFTER SOLICITING DISCOUNTS, THE L-1 BIDDER SHALL BE DECIDED BY A TOSS / DRAW OF LOTS, IN THE PRESENCE OF THE RESPECTIVE L-1 BIDDER(S) OR THEIR REPRESENTATIVE(S).

RANKING WILL BE DONE ACCORDINGLY. DECISION OF BHEL IN SUCH SITUATIONS SHALL BE FINAL AND BINDING.

9. THE BIDDER DECLARES THAT THEY WILL NOT ENTER INTO ANY ILLEGAL OR UNDISCLOSED AGREEMENT OR UNDERSTANDING, WHETHER FORMAL OR INFORMAL WITH OTHER BIDDER(S). THIS APPLIES IN PARTICULAR TO PRICES, SPECIFICATIONS, CERTIFICATIONS, SUBSIDIARY CONTRACTS, SUBMISSION OR NON-SUBMISSION OF BIDS OR ANY OTHER ACTIONS TO RESTRICT COMPETITIVENESS OR TO INTRODUCE CARTELIZATION IN THE BIDDING PROCESS.

IN CASE, THE BIDDER IS FOUND HAVING INDULGED IN ABOVE ACTIVITIES, SUITABLE ACTION SHALL BE TAKEN BY BHEL AS PER EXTANT POLICIES / GUIDELINES.

10. No request for extension of tender due date will be entertained after due date and time of tender opening under any circumstances. Hence all vendors are requested to submit their bid well within due date and time only.

11. The bidder / supplier / contractor will, when presenting his bid, declare whether other family firms or sister concern affiliates / subsidiary firms are participating in the same tender, so as to eliminate the possibility of cartel formation. Format for declaration is available in the NIT documents for this enquiry.

12. For this procurement, Public Procurement (Preference to Make in India) Order (PPP-MII Order), 2017 vide No. P-45021/2/2017-B.E.-II dated 15.06.2017, 28.05.2018, 29.05.2019 & 04.06.2020 and subsequent Orders issued by the respective Nodal Ministry shall be applicable even if issued after issue of this NIT but before finalization of contract / PO / WO against this NIT.

In the event of any Nodal Ministry prescribing higher or lower percentage of purchase preference and / or local content in respect of this procurement, same shall be applicable.

13. Vendors to also inform:
a. Self-certification of Minimum Local content if more than 50%: Yes / No.
b. Spell out details of location of value addition.

Bidders or successors can be debarred for false declarations for up to 2 years. Debarred suppliers not eligible for preference in any other procuring entity.

14. Margin of purchase preference to make in India is 20% as per Govt. of India Order No. P-45021/2/2017-BE-II DTD 15.06.17, 28.05.2018, 29.05.2019 & 04.06.2020 and subsequent Orders issued by the respective Nodal Ministry. Suppliers to comply & take a note of the same.

15. For this procurement, the local content to categorize a supplier as a Class I local supplier / Class II local Supplier / Non-Local supplier and purchase preference to Class I local supplier, is as defined in Public Procurement (Preference to Make in India), Order 2017 dated 04.06.2020 issued by DPIIT. In case of subsequent orders issued by the nodal ministry, changing the definition of local content for the items of the NIT, the same shall be applicable even if issued after issue of this NIT, but before opening of Part-II bids against this NIT.

16. FRAUD PREVENTION POLICY: THE BIDDER ALONG WITH ITS ASSOCIATE / COLLABORATORS / SUB-CONTRACTORS / SUBVENDORS / CONSULTANTS / SERVICE PROVIDERS SHALL STRICTLY ADHERE TO BHEL FRAUD PREVENTION POLICY DISPLAYED ON BHEL WEBSITE HTTP://WWW.BHEL.COM AND SHALL IMMEDIATELY BRING TO THE NOTICE OF BHEL MANAGEMENT ABOUT ANY FRAUD OR SUSPECTED FRAUD AS SOON AS IT COMES TO THEIR NOTICE. BHEL CONCILIATION SCHEME SHALL BE APPLICABLE.

17. GST TDS CLAUSE: VIDE NOTIFICATION NO. 50/2018 DATED 13.09.18, SECTION 51 CGST HAS BEEN IMPLEMENTED BY CBIC WHICH PROVIDES FOR GST TDS @ 2% (IGST 2% OR CGST 1% + SGST 1%) & SHALL BE APPLICABLE WHERE CONTRACT VALUE IS MORE THAN RS. 2.5 LAKHS & SUPPLIER IS REGISTERED

UNDER GST. TDS RETURN SHALL BE FILED AND TDS CERTIFICATES SHALL BE ISSUED BY BHEL AS PER APPLICABLE PROVISIONS. AS PER SEC 51 OF CGST ACT READ WITH NOTIFICATION 50 OF CENTRAL TAX DATED 13TH SEP 2018, TDS SO DEDUCTED SHALL BE REFLECTED ON THE GST PORTAL OF THE VENDOR / CONTRACTOR. IT SHALL BE AS PER PREVAILING GOVERNMENT NORMS AS APPLICABLE.

18. As you are kindly aware that Government e-Marketplace (GeM) is a one stop portal to facilitate online procurement of Goods & Services required by various Government Departments/ Organizations/ PSUs. GeM aims to enhance transparency, efficiency and speed in public procurement. Detailed Instructions/ Guides/ Videos/ FAQs for registration and processes are available on the portal (https://gem.gov.in).

BHEL being a PSU, would like that its suppliers / contractors also have visibility on this portal so that GeM can be used for procurement by BHEL.

Hence, you are requested to get yourselves registered on GeM.

19. "The offers of the bidders who are under suspension as also the offers of the bidders, who engage the services of the firms debarred across BHEL, shall be rejected. The list of firms debarred across BHEL is available on BHEL web site www.bhel.com.

1.0 Integrity commitment, performance of the contract and punitive action thereof:

1.1. Commitment by BHEL:
BHEL commits to take all measures necessary to prevent corruption in connection with the tender process and execution of the contract. BHEL will during the tender process treat all Bidder(s) in a transparent and fair manner, and with equity.

1.2. Commitment by Bidder/ Supplier/ Contractor:

1.2.1. The bidder/ supplier/ contractor commit to take all measures to prevent corruption and will not directly or indirectly influence any decision or benefit which he is not legally entitled to nor will act or omit in any manner which tantamount to an offence punishable under any provision of the Indian Penal Code, 1860 or any other law in force in India.

1.2.2. The bidder/ supplier/ contractor will, when presenting his bid, disclose any and all payments he has made, and is committed to or intends to make to agents, brokers or any other intermediaries in connection with the award of the contract and shall adhere to relevant guidelines issued from time to time by Govt. of India/ BHEL.

1.2.3. The bidder/ supplier/ contractor will perform/ execute the contract as per the contract terms & conditions and will not default without any reasonable cause, which causes loss of business/ money/ reputation, to BHEL.

If any bidder/ supplier/ contractor during pre-tendering/ tendering/ post tendering/ award/ execution/ post-execution stage indulges in malpractices, cheating, bribery, fraud or and other misconduct or formation of cartel so as to influence the bidding process or influence the price or acts or omits in any manner which tantamount to an offence punishable under any provision of the Indian Penal Code, 1860 or any other law in force in India, then, action may be taken against such bidder/ supplier/ contractor as per extant guidelines of the company available on www. bhel.com and/or under applicable legal provisions".

20. "A bidder shall not have conflict of interest with other bidders. Such conflict of interest can lead to anti-competitive practices to the detriment of Procuring Entity's interests. The bidder found to have a conflict of interest shall be disqualified. A bidder may be considered to have a conflict of interest with one or more parties in this bidding process, if:

a) they have controlling partner (s) in common;·

or

b) they receive or have received any direct or indirect subsidy/ financial stake from any of them;

or

c) they have the same legal representative/agent for purposes of this bid;

or

d) they have relationship with each other, directly or through common third parties, that puts them in a position to have access to information about or influence on the bid of another Bidder,·

or

e) Bidder participates in more than one bid in this bidding process. Participation by a Bidder in more than one Bid will result in the disqualification of all bids in which the parties are involved. However, this does not limit the inclusion of the components/ sub-assembly/ Assemblies from. one bidding manufacturer in more than one bid;

or

f) In cases of agents quoting in offshore procurements, on behalf of their principal manufacturers, one agent cannot represent two manufacturers or quote on their behalf in a particular tender enquiry. One manufacturer can also authorise only one agent/dealer. There can be only one bid from the following:

1. The principal manufacturer directly or through one Indian agent on his behalf; and

2. Indian/foreign agent on behalf of only one principal,·

or

g) A Bidder or any of its affiliates participated as a consultant in the preparation of the design or technical specifications of the contract that is the subject of the Bid,·

or

h) In case of a holding company having more than one independently manufacturing units, or more than one unit having common business ownership/management, only one unit should quote. Similar restrictions would apply to closely related sister companies. Bidders must proactively declare such sister/ common business/ management units in same/ similar line of business. "

GENERAL & SPECIAL TERMS AND CONDITIONS OF ENQUIRY AND INDIGENOUS P.O., BHEL SPECIFICATION, DRAWINGS, DECLARATION AGAINST CARTEL FORMATION ARE ENCLSOED. PLEASE FILL UP TECHNO-COMMERCIAL ANNEXURE AND DECLARATION AGAINST CARTEL FORMATION DULY SEALD AND SIGNED PROPERLY AND SEND IT ALONG WITH YOUR OFFER.

ANNEXURE-I

PVC CALCULATION OF SHORT CIRCUIT RING (NDE & DE)

AS PER DRAWING. 44454592005 REV. 04.

P2 - Final Price of the item	**P2 = P1 + EC**
P1 - Price of the item in Purchase Order (PO)	**P1 (in Rs.)**
EC - PVC Effect with respect to Copper	**EC = WC x (C2 – C1)**
WC - Weight of Cu in 1 Set tendered item as per drg no. **44454592005 REV. 04**	**WC = 12.2 Kg**

'**C1**' is the Base Rate of Copper and shall be taken as **average** of {LME CSP rate in BME circular of 1st fortnight of the *month of Techno-Commercial bid opening* **multiplied** by Exchange Rate declared in the same circular} **and** {LME CSP rate in BME circular of 2nd fortnight of the previous month to the *month of Techno-Commercial bid opening* **multiplied** by Exchange Rate declared in the same circular}

'**C2**' is the Final Rate of Copper and shall be taken the lower of the following two:

(i) **Average** of {LME CSP rate in BME circular of 1st fortnight of the *month of Scheduled Delivery* **multiplied** by Exchange Rate declared in the same circular} **and** {LME CSP rate in BME circular of 2nd fortnight of the previous month to the *month of Scheduled Delivery* **multiplied** by Exchange Rate declared in the same circular}

(ii) **Average** of {LME CSP rate in BME circular of 1st fortnight of the *month of Actual Delivery* **multiplied** by Exchange Rate declared in the same circular} **and** {LME CSP rate in BME circular of 2nd fortnight of the previous month to the *month of Actual Delivery* **multiplied** by Exchange Rate declared in the same circular}

For the purpose of evaluations of Tender,

Techno-Commercial Bid Opening Month (i.e. Scheduled Due Date of Tender): Sept'24

Base Rate Calculation for PVC:

(i) BME Circular of 1st fortnight of the Month of Techno-Commercial Bid Opening, i.e. Sept'24

(ii) BME Circular of 2nd fortnight of the previous month to the month of Techno-Commercial Bid Opening, i.e. Aug'24

Reference Circular Dates	LME CSP Average as per BME Circular (USD/MT)	SBI TT AVERAGE as per BME Circular (Rs./USD)	Fortnightly BME Rate (Rs./Kg.)	C1 (Rs./Kg.)
02.09.2024	9126.5	84.34	769.729	**756.821**
16.08.2024	8822.5	84.32	743.913	

The BME Circular is accessible at www.bme.in (Circular → BME Bench Mark Copper Billets Circular).

NOTE: In case of Early Delivery desired by BHEL is covered in the PO remarks and if at all party is agreed upon to deliver the item before PO delivery schedule, for PVC purpose the C2 shall be considered for the month in which the *Actual Delivery* is executed & for the actual quantity delivered.

545004/2024/HEP-MNX35408

BOMBAY METAL EXCHANGE LTD.

Organisation devoted to the promotion of Trade & Industry in Non-ferrous Metals All over India

Price Circular No. 017/2024

To All Members/Brokers, Date : September 02, 2024

Sub : Benchmark - Copper Billet Prices effective from 1st September, 2024

Further to our Circular No. 016/2024 dated August 16, 2024 Bombay Metal Exchange Ltd. is announcing the guideline price structure for Copper Billet. Due to heavy fluctuations in the international market BME is giving interim prices.

The basis of pricing will be LME Cash Settlement Price average and SBI TT average for the period from 16th August, 2024 to 31st August, 2024.

The Basic price in rupees per metric ton shall be computed by applying the following formula.

PRICE	**(LME CSP Average Cathode for the period from 16th August, 2024 to 31st August, 2024 + respective Premium in US $) X (SBI TT) X Multiplying Factor 1.05 + Clearing / Forwarding / Handling & Carrying Cost = Total Value (A) + Conversion / Fabrication charges from Copper Cathode to Copper Billet + 18% GST + Cost For Financial Arrangement / Margin Arrangement & Other Misc. Expenses @ 1% - 18 GST**

	COPPER BILLETS
LME CSP AVERAGE	**US $ 9119.05**
+ LME GRADE A – PREMIUM COPPER CATHODE	**US $ 60.00**
+ TRANSACTION CHARGES	**US $ 10.00**
	9189.05
X SBI TT AVERAGE	Rs **84.34**
	775004.48
X MULTIPLYING FACTOR 1.05	**1.05**
+ CLEARING / FORWARDING / HANDLING & CARRYING COST	Rs **4250/Ton**
TOTAL VALUE (A)	Rs **818005**
+ CONVERSION / FABRICATION CHARGES FROM COPPER CATHODE TO COPPER BILLET	Rs **35000/Ton**
FINAL AMOUNT	**Rs.853005/-Ton**
ADD 18% GST	**Rs. 153540.85/-Ton**
	1006545.85/-Ton
+ COST FOR FINANCIAL ARRANGEMENT / MARGIN ARRANGEMENT & OTHER MISC. EXPENSES @ 1%	**10065.46/-Ton**
	Rs. 1016611.31/- Ton
LESS 18% GST	**Rs 153540.85/-Ton**
EFFECTIVE FROM 1ST SEPTEMBER TO 15TH SEPTEMBER 2024 OR UNTIL FURTHER NOTICE	**Rs. 863070/Ton**
	Rs **863.070 Per K.G.**

[Previous price of Copper Billet – **Rs. 836309/- Ton**]

Note:

1. The above price guideline with new mechanism is declared on basis fortnightly LME CSP average from 16th August, 2024 to 31st August, 2024. This new policy will be followed in future until further notice.
2. The above is the basic formula given as a guideline by BME without any prejudice whatsoever for the smooth functioning of the trade and industry.
3. As the contract for sale and purchase will be entered into directly by the concerned parties, the deliveries and all other expenses will have to be worked out mutually between concerned parties, Plus GST extra as applicable.
4. The prices worked by BME will serve as a benchmark guideline for fulfilling contracts and BME will not be responsible for any financial liability legally or otherwise.
5. Since Trading of Wire Bar is discontinued in LME, there is shortage of LME approved quality wire bars in international market. However the price published here is only as a benchmark. Members are requested to please take note of it.
6. Any change in Vedanta Ltd / Hindalco India / Adani Ltd Price policy can be considered.
7. The above price is on advance payment basis.

BOMBAY METAL EXCHANGE LTD.

Sandeep T. Jain
PRESIDENT

Regd. Office BME House, 88/90, Kika Street, Gulalwadi, Mumbai – 400 004
Tel : 022 22421964 / 49605039 Email – info@bme.in

545004/2024/HEP-MNX35408

BOMBAY METAL EXCHANGE LTD.

Organisation devoted to the promotion of Trade & Industry in Non-ferrous Metals All over India

Price Circular No. 016/2024

To All Members/Brokers, Date : August 16, 2024

Sub : Benchmark - Copper Billet Prices effective from 16th August, 2024

Further to our Circular No. 015/2024 dated August 1, 2024 Bombay Metal Exchange Ltd. is announcing the guideline price structure for Copper Billet. Due to heavy fluctuations in the international market BME is giving interim prices.

The basis of pricing will be LME Cash Settlement Price average and SBI TT average for the period from 1st August, 2024 to 15th August, 2024.

The Basic price in rupees per metric ton shall be computed by applying the following formula.

PRICE	**(LME CSP Average Cathode for the period from 1st August, 2024 to 15th August, 2024 + respective Premium in US $) X (SBI TT) X Multiplying Factor 1.05 + Clearing / Forwarding / Handling & Carrying Cost = Total Value (A) + Conversion / Fabrication charges from Copper Cathode to Copper Billet + 18% GST + Cost For Financial Arrangement / Margin Arrangement & Other Misc. Expenses @ 1% - 18 GST**

	COPPER BILLETS
LME CSP AVERAGE	**US $ 8822.50**
+ LME GRADE A – PREMIUM COPPER CATHODE	**US $ 60.00**
+ TRANSACTION CHARGES	**US $ 10.00**
	8892.50
X SBI TT AVERAGE	Rs **84.32**
	749815.60
X MULTIPLYING FACTOR 1.05	**1.05**
+ CLEARING / FORWARDING / HANDLING & CARRYING COST	Rs **4250/Ton**
TOTAL VALUE (A)	Rs **791556**
+ CONVERSION / FABRICATION CHARGES FROM COPPER CATHODE TO COPPER BILLET	Rs **35000/Ton**
FINAL AMOUNT	**Rs.826556/-Ton**
ADD 18% GST	**Rs. 148780.15/-Ton**
	975336.15/-Ton
+ COST FOR FINANCIAL ARRANGEMENT / MARGIN ARRANGEMENT & OTHER MISC. EXPENSES @ 1%	**9753.36/-Ton**
	Rs. 985089.51/- Ton
LESS 18% GST	**Rs 148780.15/-Ton**
EFFECTIVE FROM 16TH AUGUST TO 31ST AUGUST 2024 OR UNTIL FURTHER NOTICE	**Rs. 836309/Ton**
	Rs **836.309 Per K.G.**

[Previous price of Copper Billet – **Rs. 861588/- Ton**]

Note:

1. The above price guideline with new mechanism is declared on basis fortnightly LME CSP average from 1st August, 2024 to 15th August, 2024. This new policy will be followed in future until further notice.
2. The above is the basic formula given as a guideline by BME without any prejudice whatsoever for the smooth functioning of the trade and industry.
3. As the contract for sale and purchase will be entered into directly by the concerned parties, the deliveries and all other expenses will have to be worked out mutually between concerned parties, Plus GST extra as applicable.
4. The prices worked by BME will serve as a benchmark guideline for fulfilling contracts and BME will not be responsible for any financial liability legally or otherwise.
5. Since Trading of Wire Bar is discontinued in LME, there is shortage of LME approved quality wire bars in international market. However the price published here is only as a benchmark. Members are requested to please take note of it.
6. Any change in Vedanta Ltd / Hindalco India / Adani Ltd Price policy can be considered.
7. The above price is on advance payment basis.

BOMBAY METAL EXCHANGE LTD.

Sandeep T. Jain
PRESIDENT

Regd. Office BME House, 88/90, Kika Street, Gulalwadi, Mumbai – 400 004
Tel : 022 22421964 / 49605039 Email – info@bme.in

545004/2024/HEP-MNX35408

24/88

535985/2024/HEP-TXM20500

FIRST ANGLE PROJECTION (ALL DIMENSIONS ARE IN mm)

REV.	DATE	ALTERED / CHECKED / APPROVED	ZONE	NOTES
02	14.7.14			NOTES UPDATED.
01	23.6.14			DRG. UPDATED AS PER SHOP FEEDBACK. DIMS. ø450 WAS ø448, WIDTH 26.5 WAS 25.0, WT. 12.2 WAS 11.07KG.
03	08.8.14			STYLE NO. FOR IT.001 WAS NOT ON.
04	12.8.14			NOTE-1 & 4 UPDATED. EARLIER DIN 17666:1983 (MATERIAL NUMBER 2.1293) SUPERSEDED.

ADDITIONAL INFORMATION

STATUS OF DRAWING

DISTRIBUTION OF PRINTS: TME-1, TXM-3, TNX-1

STYLE LIST	
IT.NO.	STYLE NO.
001	BP9044721720

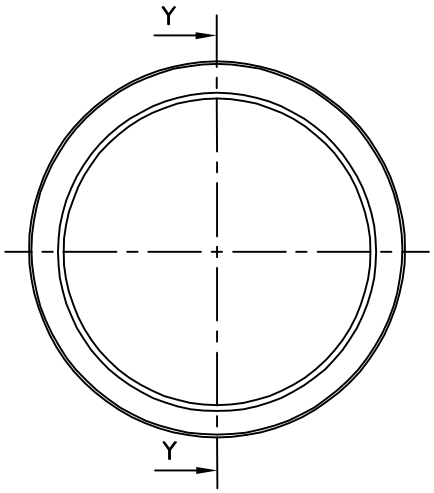

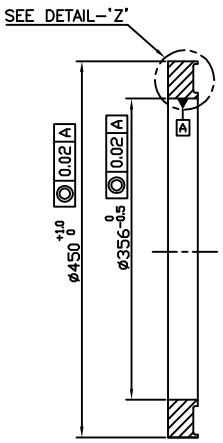

SECTION-'YY'

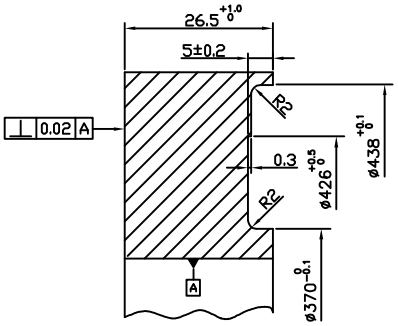

ENLARGED DETAIL-'Z'

NOTES:-

1. IT. 001 TO BE PURCHASED AS FORGED SEAMLESS ANNEALED RING OF CuCr1Zr AS PER BS EN 12420:1999 (MATERIAL NUMBER CW106C, MATERIAL CONDITION H110) [REF. TABLE-2 FOR COMPOSITION, TABLE-12 FOR MECHANICAL PROPERTIES, TABLE-13 FOR ELECTRICAL PROPERTIES]

   RAW MATERIAL TO BE USED OF M/S MITSUBHI, JAPAN, M/S LUVATA & M/S BUNTMETALL, AUSTRIA OR ANY OTHER REPUTED SOURCE WHO CAN SUPPLY THE RAW MATERIAL STRICTLY AS PER SPECIFICATION AS WALL AS DOCUMENTARY PROOF REGARDING QUALITY OF RAW MATERIALS TO BE SUBMITTED.
2. MACHINE ALL OVER 3.2/. REMOVE SHARP EDGES.
3. ULTRASONIC TESTING ACCORDING TO SPEC. TM 98264 TABLE-1 VOLUME A, LEVEL-3 (THIS SPEC. IS EQUIVALENT TO GERMAN SPEC DKI-WERKSTOFF-PRUEFBLATT).
4. SC RING TO BE DELIVERED INCLUDING CERTIFICATE ACCORDING TO BS EN 10204:2004 FOR THE MECHANICAL VALUE, CONDUCTIVITY AND US TEST.
5. REQUIRED QTY. PER MOTOR 2 NOS.

REF. DRG. NO.

VAR00	REMARKS	ITEM NO.	DESCRIPTION	DRAWING NO.	IT.NO. / VAR.	MATL. CODE / MATL. SPCN.	A C	UNIT	UNIT WT. / QTY.
	SEE NOTES	001	SHORT CIRCUIT RING					KG.	12.2

28 → CARD TYPE-3 | 28 → CARD TYPE-1 | 28 → CARD TYPE-2

SIGN. & DATE

BHARAT HEAVY ELECTRICALS LTD. BHOPAL

	NAME	SIGN	DATE	NO. OF VAR.
DRN.	S.D.BHAGAT		29/03/14	–
CHD.	K.K.D.		29/03/14	
APPD.	S.P.S.		29/03/14	

INVENTORY NO.

DEPT.	UNTOL. DIMS. GR.	SCALE	WEIGHT (K.G.)	REF. TO ASSY. DRG.	ITEM NO.	NO. OF ITEM
TME / CODE 405	AA 0230208 GR – M	N.T.S.	–	1 445 45 92 007	002	001

TITLE: SHORT CIRCUIT RING (NDE & DE) (IM4507BZ/IM4508AZ)

DRAWING NO. 4 445 45 92 005 REV. 04

SHT. NO. 01 NO. OF SHT. 01

THE INFORMATION ON THIS DOCUMENT IS THE PROPERTY OF BHARAT HEAVY ELECTRICALS LIMITED. IT MUST NOT BE USED DIRECTLY OR INDIRECTLY IN ANY WAY DETRIMENTAL TO THE INTEREST OF THE COMPANY.

COPYRIGHT AND CONFIDENTIAL
The information on this document is the property of BHARAT HEAVY ELECTRICALS LTD.
It must not be used directly or indirectly in any way detrimental to the interest of the company

Procedure for Ultrosonic testing of copper and copper alloys plates

1. Test Objective

The ultrasonic test described in this test specification has the objective of detecting internal material discontinuuities [1] in places of copper and copper alloys.

2. Scope

This test specification is applicable to sheet rolled or forged plates of copper and copper alloys in thickness of 5-160 mm, whose structure allow this test.

3. Test Levels

Depending on the requirement and type of material, tests can be performed in accordance with three test levels.

In general, and when there are no other agreements, tests are performed in accordance with Level iii). Where there are higher requirements, Levels ii or i may be agreed in so far as it is permitted by material and delivery condition.

Acceptance criteria relating to the various levels are stated in Table 1.

4. Surface Condition

The plate surfaces must be free from scales and impurities, Surface undulation should be so small that the probe can not be properly applied, and that there is no gap of more than 0.5 mm under the proble face in any place.

5. Test Method

In general the pulse echo shall be used, in the logitudinal waves and normal perpendicular incidence.

5.1 Signal Evaluation Methods

5.1.1 Evaluation Using Reference Blocks"

The reference block must be made of the same material and by the same manufacturing process as the plates to be tested. The thickness of the reference block may vary more than ±20% from the nominal thickness of the plate to be tested. A minimum of 3 reference reflectors (flat-bottom holes) shall be drilled from one side of the reference block to a depth of 10, 50 and 90% of the wall thickness (Fig.1). For wall thicknesses to 20 mm nos. only 1 drill hole with a depth of 50% of wall thickness will be adequate.

Revision : 00	Distribution	Qty.	Approved :		
Date : 28/11/98	TXM	2			
	TME	2	Prepared	Checked	Date
					28/11/98

COPYRIGHT AND CONFIDENTIAL
The information on this document is the property of BHARAT HEAVY ELECTRICALS LTD.
It must not be used directly or indirectly in any way detrimental to the interest of the company

The distances between the drill holes and between the drill notes and the edges of the reference block must be greater than the diameter of the probe. For the diameter of the drill holes in accordance with plate thickness see Table 1.

5.1.2 AVG/DGS Method"

Taking into consideration the relevant sound velocities and , evaluation of the reflectors may also be done by the AVG/DGS method.

5.1.3 Half-amplitude method

Large reflectors shall be evaluated by the half-amplitude method (6-db-drop).

6. Requirements for testing equipment

6.1 Test System

The flow detector with the proble must be in accordance with DIN 54126, part 1.

6.2 Probes

For the ultrasonic testing of plates T/A-probes longitudinal waves) of normal probes (lon gitudinal waves) shall be used with a frequency of 0.5 to 6 MHz, depending on material, material condition and material thickness, Frequencies with more than 2 MHz shall be used preferably for the verification of flaws near the surface and for testing thin plates.

7. Adjustment of Instruments

7.1 Distance Adjustment

With T/R-probes distance adjustment shall be made on the reference block by means of the backwall echo and the echo from flat-bottomed holes with half wall thickness depth.

With normal probes distance adjustment shall be made with the first and second backwall echos out of the reference block or out of the plate.

7.2 Sensitivity Adjustment

In the reference block method, sensitivity adjustment shall be made according to Fig.1 It has to be checked by measuring the transfer losses that differences in sensitivity between reference block end plate to be tested do not exceed 4 dB.

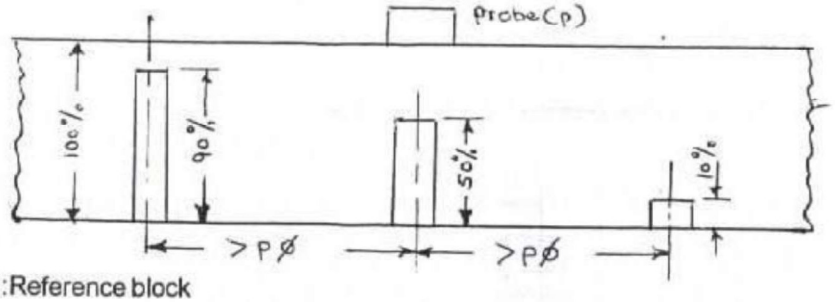

Fig. 1:Reference block

With the AVG/DGS Method sensitivty adjustment is made with the backwall echo out of the plate to be tested. The vlaue of necessary increase of sensitivity is taken out of an AVG/DGS diagram, in correspondence to the probe type used and the sound velocity of the material to be tested.

With both methods of adjustment instrument gain shall be set to a level that echos to be registered reach atleast 20% of screen height. Additionally the registration level should be atleast 8dB above noise level.

When these requirements can not be fuilfilled, even when selecting the best suited probe producer and purchaser must come to an agreement on the further proceedings.

7.3 Checking Instrument Adjustment

The test system should be checked at regular intervals, and atleast at the beginning and the end of the ultrasonic test.

8. Test Performance

8.1 Procedure

The plates may be tested manually or semi-automatically (mecharuzed) (DIN 54 126, part 2.) Soundwave incidence is parallel to plate thickness.

In general it is sufficient to test from one surface only, as flaws hidden in the dead zone after initial pulse are detected via drop of the backwall echo, or as a signal behind the first backwal echo.

8.2 Range of Test

Range A

The surface of the plate shall be scanned with a matrix of 200 mm distance or with parallel lines of 100 mm distance. The edge zones within a width of 100 mm shall be tested with complete coverage. Complete coverage of this area means an overlapping of scanning paths by 1/3 of the probe diameter.

Where a registration due to signal is found with a 200 mm matrix scanning of 100 mm line scanning, a circle of 200 mm radius must be tested with complete coverage.

The test range must be state at the time of the order, otherwise the ultrasonic test according to test range A will be applied.

Range B

The surface of the plate shall be scanned with a matrix of 100 mm distance or with parallel lines of 50 mm distance.

The edge comes within a width of 100 mm shall be tested with complete coverage.

Where a registration due to signal is found within the 100 mm matrix scanning or 50 mm line scanning a circle of 100 mm radius must be tested with complete coverage.

COPYRIGHT AND CONFIDENTIAL
The information on this document is the property of BHARAT HEAVY ELECTRICALS LTD.
It must not be used directly or indirectly in any way detrimental to the interest of the company

With the AVG/DGS Method sensitivty adjustment is made with the backwall echo out of the plate to be tested. The vlaue of necessary increase of sensitivity is taken out of an AVG/DGS diagram, in correspondence to the probe type used and the sound velocity of the material to be tested.

With both methods of adjustment instrument gain shall be set to a level that echos to be registered reach atleast 20% of screen height. Additionally the registration level should be atleast 8dB above noise level.

When these requirements can not be fuilfilled, even when selecting the best suited probe producer and purchaser must come to an agreement on the further proceedings.

7.3 Checking Instrument Adjustment

The test system should be checked at regular intervals, and atleast at the beginning and the end of the ultrasonic test.

8. Test Performance

8.1 Procedure

The plates may be tested manually or semi-automatically (mecharuzed) (DIN 54 126, part 2.) Soundwave incidence is parallel to plate thickness.

In general it is sufficient to test from one surface only, as flaws hidden in the dead zone after initial pulse are detected via drop of the backwall echo, or as a signal behind the first backwal echo.

8.2 Range of Test

Range A

The surface of the plate shall be scanned with a matrix of 200 mm distance or with parallel lines of 100 mm distance. The edge zones within a width of 100 mm shall be tested with complete coverage. Complete coverage of this area means an overlapping of scanning paths by 1/3 of the probe diameter.

Where a registration due to signal is found with a 200 mm matrix scanning of 100 mm line scanning, a circle of 200 mm radius must be tested with complete coverage.

The test range must be state at the time of the order, otherwise the ultrasonic test according to test range A will be applied.

Range B

The surface of the plate shall be scanned with a matrix of 100 mm distance or with parallel lines of 50 mm distance.

The edge comes within a width of 100 mm shall be tested with complete coverage.

Where a registration due to signal is found within the 100 mm matrix scanning or 50 mm line scanning a circle of 100 mm radius must be tested with complete coverage.

COPYRIGHT AND CONFIDENTIAL
The information on this document is the property of BHARAT HEAVY ELECTRICALS LTD.
It must not be used directly or indirectly in any way detrimental to the interest of the company

Table 1 : Acceptance criteria for plates tested ultrasonically

Level	Thickness of plate or reference clock mm	Equivalent reflector size (ERS) diameter of flat -bottomed holes mm	BE-drop (Backwall Echo-drop) dB	Test Range A 200 mm matrix	Test Range B 100 mm matrix	Test Range C complete coverage
				Max.permitted no.of flaw echos per m2 of plate		
i	≤ 10	3	≤ 12	2	4	6
	> 10 - ≤ 20	4				
	> 20 - ≤ 30	5				
	> 30 - ≤ 50	6				
	> 50 - ≤ 70	8				
	> 70 - ≤ 100	10				
	> 100 - ≤ 160	12				
ii	≤ 10	4	≤ 12	2	4	6
	> 10 - ≤ 20	5				
	> 20 - ≤ 30	6				
	> 30 - ≤ 50	8				
	> 50 - ≤ 70	10				
	> 70 - ≤ 100	12				
	> 100 - ≤ 160	18				
iii	≤ 10	5	≤ 12	2	4	6
	> 10 - ≤ 20	6				
	> 20 - ≤ 30	8				
	> 30 - ≤ 50	10				
	> 50 - ≤ 70	12				
	> 70 - ≤ 100	16				
	> 100 - ≤ 160	20				

10. Test Personnel

10.1 Inspectors

Inspectors must possess adequate basic technical knowledge and be able to perform the tests in accordance with the requirements stipulated in this material test application.

10.2 Supervisors

The supervisor must have the adequate knowledge for the task. He must be able to per form the procedures in accordance with the requirements stipulated in this material test specification. Moreover, he is responsible for the necessary training of inspectors and for the correct performance of the testing equipment.

10.3 Qualification of Test Personnel

Qualifications of test personnel should be in accordance with the requirements of DG21P Recommendations for training, qualification, and examination of non-destructive testing inspections (NDT inspections guideline) or the DGZIP Recommendations for the qualifi cation and certification of non-destructive test personnel (qualificatin guideline)". Purchaser and manufacturer are free to agree on other equivalent qualification guide lines in respect to non-destructive test, personnel.

COPYRIGHT AND CONFIDENTIAL
The information on this document is the property of BHARAT HEAVY ELECTRICALS LTD.
It must not be used directly or indirectly in any way detrimental to the interest of the company

BHARAT HEAVY ELECTRICALS LIMITED, BHOPAL
QUALITY CONTROL TRANSPORTATION
QUALITY ASSURANCE PLAN(QAP)

QA PLAN NO. : QTM/TXM/VENDOR/QAP/2016-17/IM 4507/ SHORT CIRCUIT RING (NDE & DE) REV 00 DT. 13.10.2016
REFERENCE- DRG NO. 44454592005

SL. NO.	CHARACTERISTIC	CLASSIFICATION	TYPE OF CHECK	QUANTUM OF CHECK		REF. DOCUMENT	FORMAT OF RECORD	REMARKS
				TP	TPIA			
1.0	Material Test Certificate	A	VR	100%	100%	Drg. no. **44454592005** and relevant spec.	TR	TEST LAB NABL / EQUIVALENT ACCREDITED/ SOURCE MILL TC 1. Chemical , mech and electrical test report as per note 1 and 4 of drg.
2.0	Dimension	A	I	100%	20%	As Note 2 of Drg.	SR	Report to be submitted
3.0	Ultrasonic test	A	I	100%	5%	As per note 3 of drg.	SR	Report to be submitted
4.0	Identification Vendor Name, PO No. & item serial no.	A	VR	100%	10%	PO/Drawing	SR	----
5.0	Packaging suitability for transit & storage	B	VR	100%	20%	--	SR	Packaging shall be such that during transit components should not damage.

PREPARED BY	APPROVED BY
12/10/16	13/10/16

Notes:
1) All TR, SR checked by TP, TPIA & QC (dully signed & sealed) as per above QAP requirement shall be submitted along with consignment.

Abbreviation: A - Critical, B- Major, VR – Verification, I-Instrument/ Gauges, T R- Test Record, S R- Source Record.

AGENCIES:

TPIA –BHEL appointed third Party Inspecting Agency

T P – Task Performer

तिलकराम यादव, वरि. अभियंता / Tilak Ram Yadav, Sr. Engineer
क्यू.टी.एम. विभाग / QTM Division
बी.एच.ई.एल., भोपाल / BHEL, Bhopal

TME/PQR/SCR

Date – 03/09/24

Technical Pre-Qualification Requirement (PQR) for Procurement of Short Circuit Ring

S. No.	Description	Vendor to Comment	Documents to be submitted.
1	Vendor shall supply Short Circuit Ring as per drawing mentioned in BHEL enquiry.	Yes/ No	-
2	Supply experience in preceding 5 years (from original enquiry due date) of same/similar* item to Indian Railways/ Traction Machine Manufacturer. Note – 1. Development/ trial PO shall not be considered for supply experience. 2. Vendor to submit relevant drawings/ specification/ any other relevant document (if required) to confirm that PO copy submitted by the vendor is of same same/ similar item as per requirement of Technical Pre-Qualification Requirement (PQR).	Yes/No	Un-price PO copies of same/ similar item in preceding 5 years from original enquiry due date to Indian Railways/ Traction Machine Manufacturer. & Supply proof (Delivery Challan/invoice etc.) of corresponding PO in preceding 5 years from original enquiry due date.
3	Manufacturing & Testing facilities.	Yes/No	Details of Plant & Machinery and Testing facility to manufacture & test Short Circuit Ring to be submitted.
4	Manufacturing and Testing facilities assessment may be carried out by BHEL at supplier's works. Supplier to give confirmation to agree for the same.	Yes/No	-
5	Vendor should be a manufacturer of Short Circuit Ring and not a trader.	Yes/No	-

Notes:-

1. Compliance of all the points in above PQR is mandatory. In absence of compliance of above, vendor's offer is liable to be rejected.
2. * - Copper/ Copper Alloy Resistance Ring/ Short Circuit Ring with outer diameter more than 200 mm shall be considered as similar item.
3. Declaration by vendors regarding information / compliance submitted by vendor shall be correct in all respect. In case any deviation/false information is revealed later on, BHEL is free to initiate appropriate punitive proceeding as per prevalent processes and guidelines of company.

Prepared By	Approved By
Prasad 03.09.24 Prasad Telang Manager/ TME	03/09/24 Vikas Rawtiya Sr. DGM/ TME