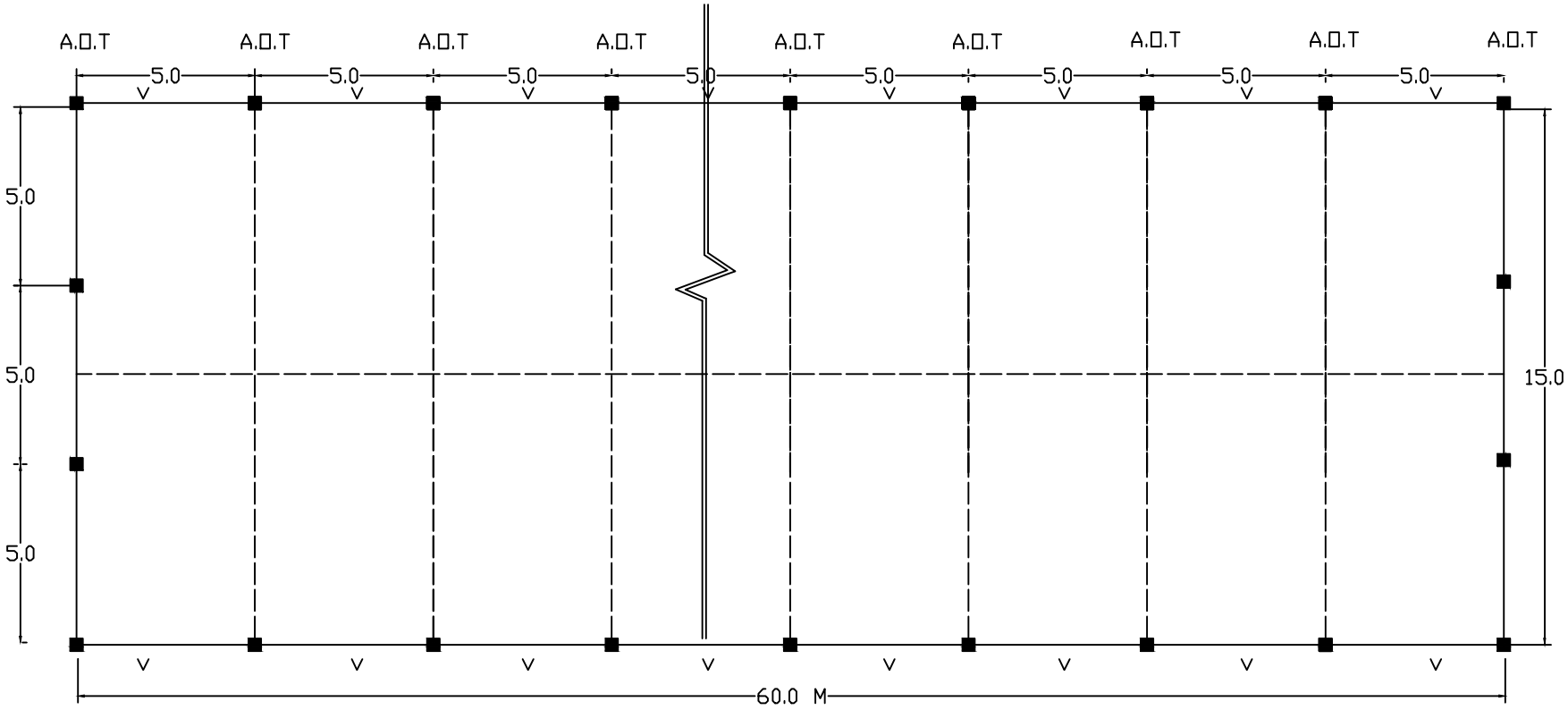

■ = COLUMN 400MM X 400MM
V-STEEL LOUVERD VENTILATORS OF SIZE
600MM X 450MM
A.O.T = AXIS OF TRUSS
*TOTAL NO OF COMPLEATE TRUSS-11 NOS.
*HALLOW TRUSS WITHOUT VERTICAL & CROSS BRACING/STRUDS SHALL BE PROVIDED AT BOTH ENDS OF THE GABLE END.

DRG. NO.BHE/PW/CS-01

PLAN AT PLINTH LEVEL FOR CLOSED SHED (60M X 15M)

NOTE:
1) INCASE TOP OF BEAM IS BELOW ADJACENT ROAD LEVEL. BRICKWORK (345MM THICK WALL) SHOULD BE RAISED ABOVE PLINTH BEAM MAINTAINING ATLEAST 300MM ABOVE ROAD LEVEL.
2) INCASE BLACK COTTON SOIL/ASH/NEWELY BACKFILLED SOIL IS FOUND AT THE BOTTOM LEVEL OF SOLING, A 150 MM THICK MURUM SHALL BE LAID BELOW SOLING OF FOUNDATION.
3) IN GENERAL FLOOR FINISHED LEVEL IS 350MM ABOVE GL .
4) VENTILATOR SHALL BE PROVIDED BELOW THE LINTEL BEAM & CENTER OF EACH SPAN.

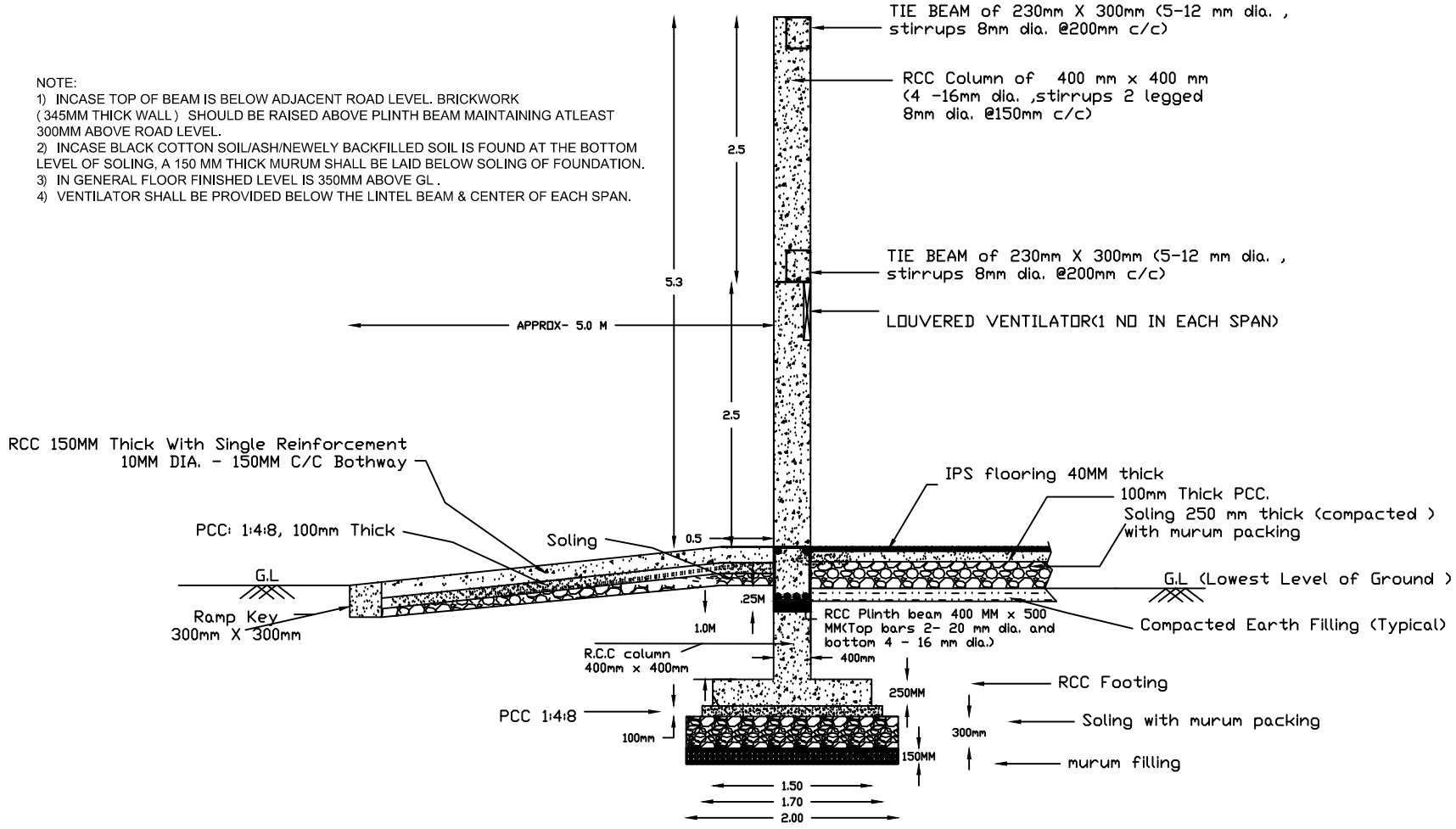

DRG. NO.:BHE/PW/CS-02

SECTIONAL DETAILS OF RCC FOOTING & COLUMN FOR CLOSED STORAGE SHED

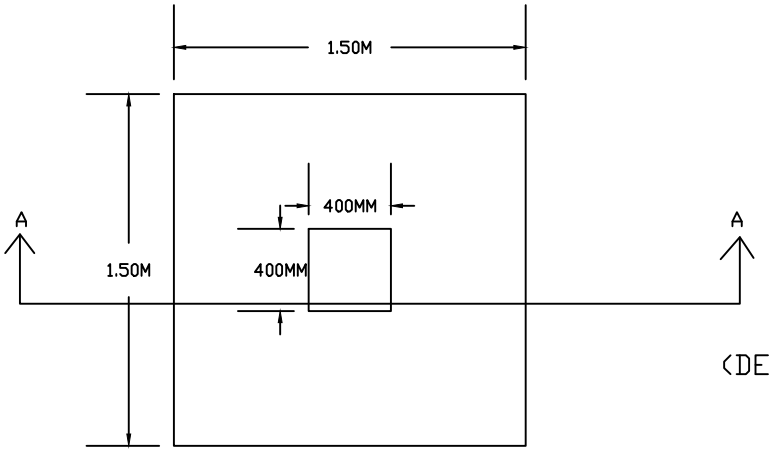

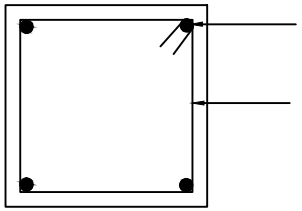

SECTION B-B
(DETAILS OF COLUMN)

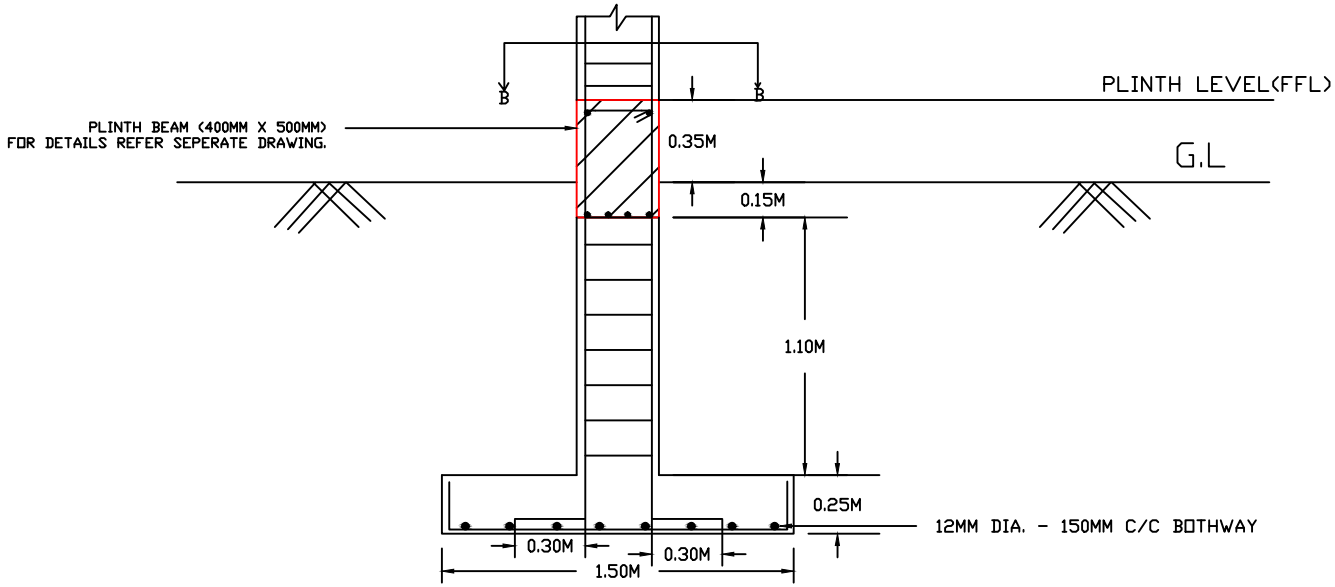

SECTION A -A

DRG NO.BHE/PW/CS-03

PLAN & RCC DETALIS OF FOOTINGS FOR CLOSED SHED

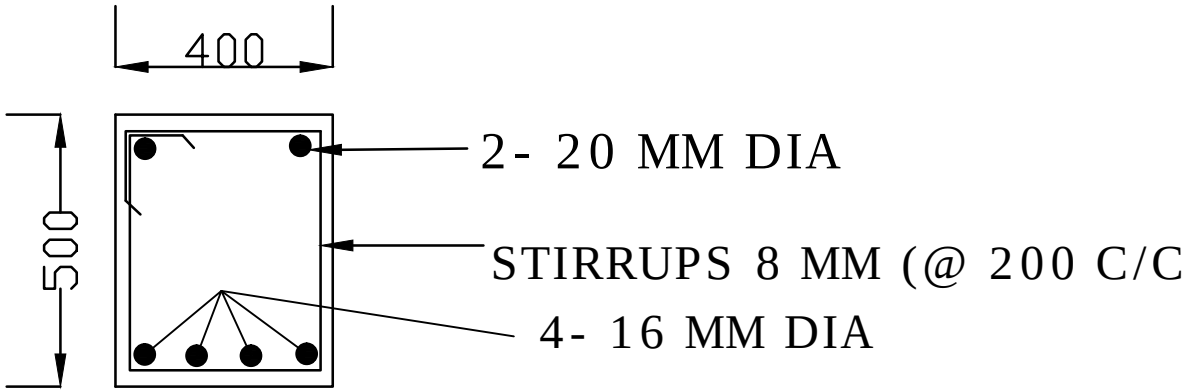

SECTION OF PLINTH BEAM
(400MMX500MM)

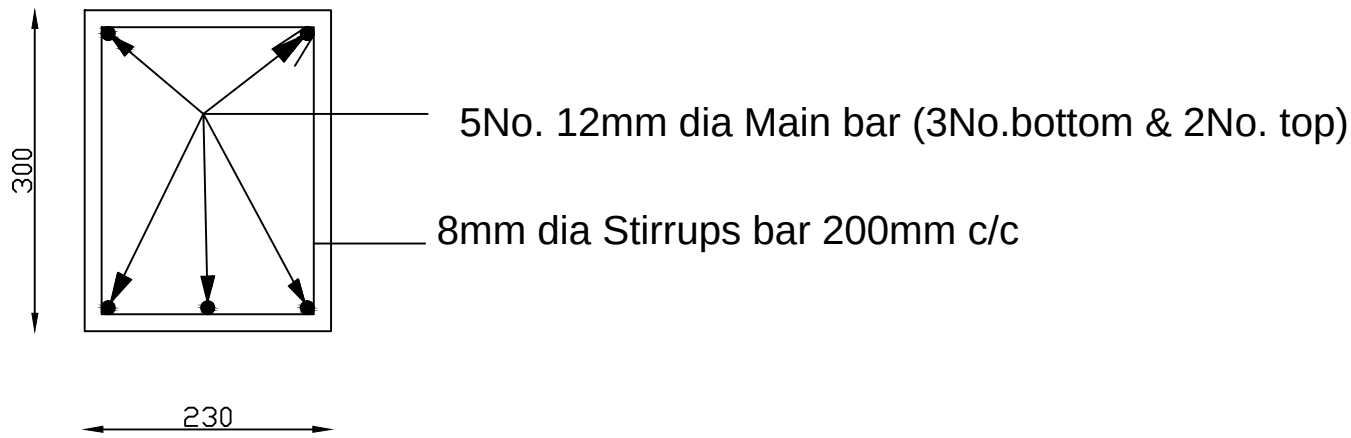

SECTION OF BEAM (230mm x 300mm)

DRG NO. BHE/PW/CS-05

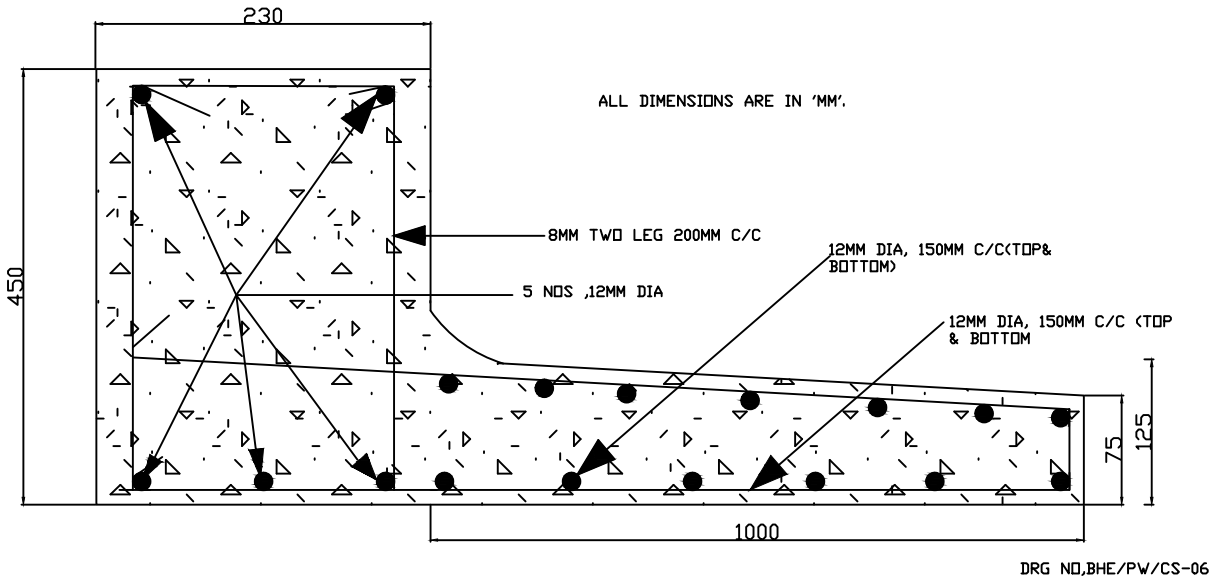

SECTION OF LINTEL & SUN SHED PROJECTION FOR CLOSED SHED ROLLING SHUTTER

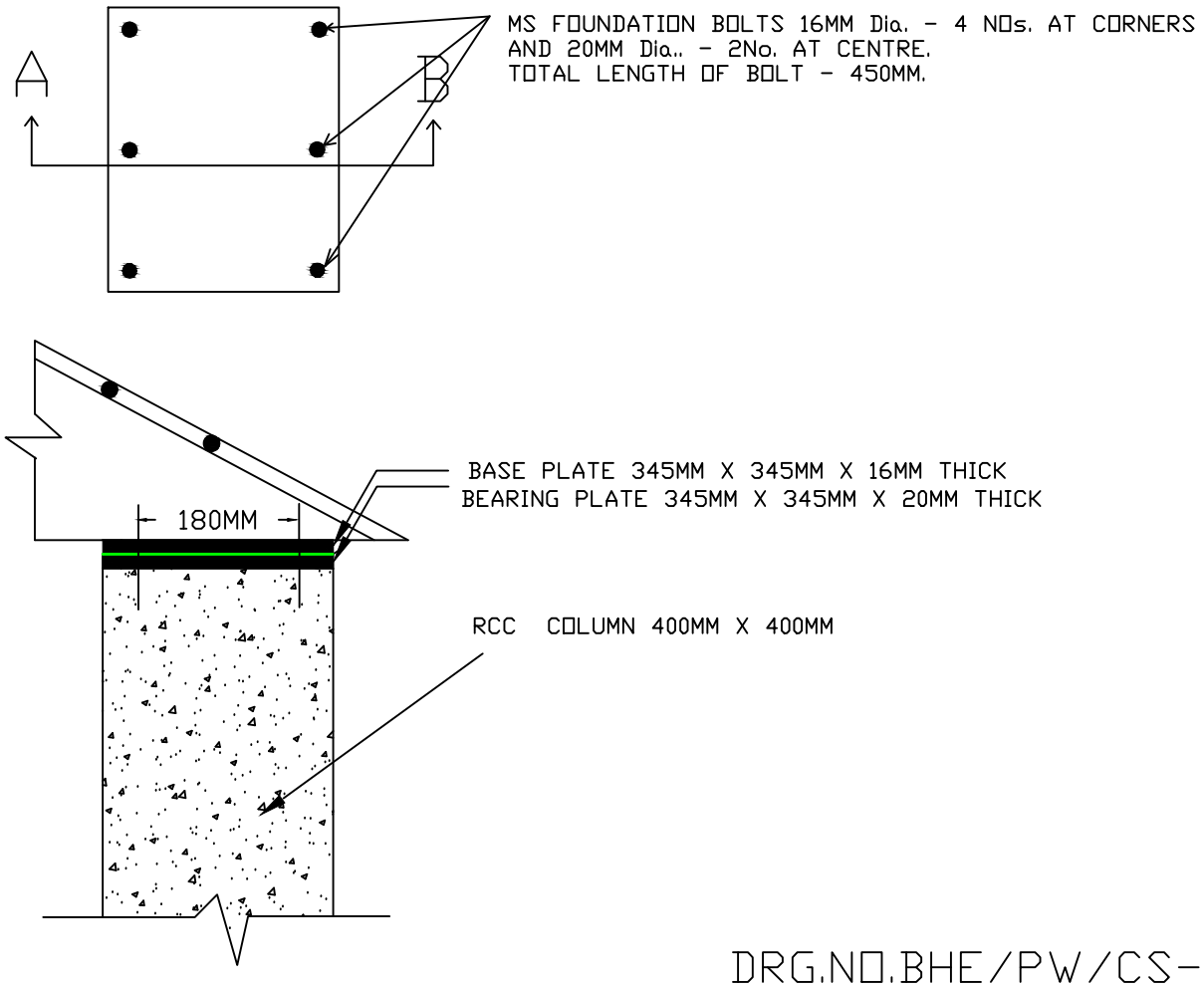

DRG.NO.BHE/PW/CS-07

SEC A -B

DETAILS OF BASE PLATE AT TRUSS LEVEL OF CLOSED STORAGE SHED

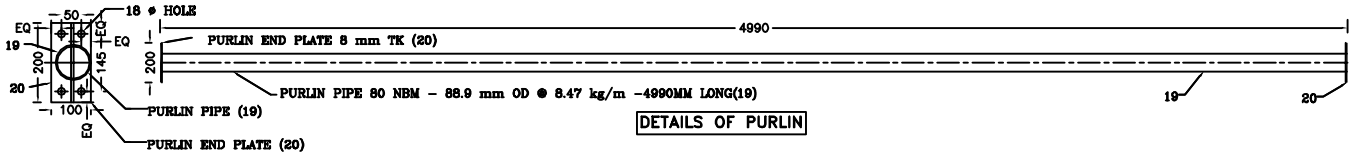

DETAILS OF PURLIN

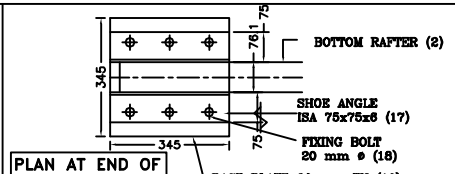

PLAN AT END OF TOP BASE PLATE

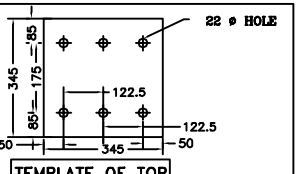

TEMPLATE OF TOP BASE PLATE

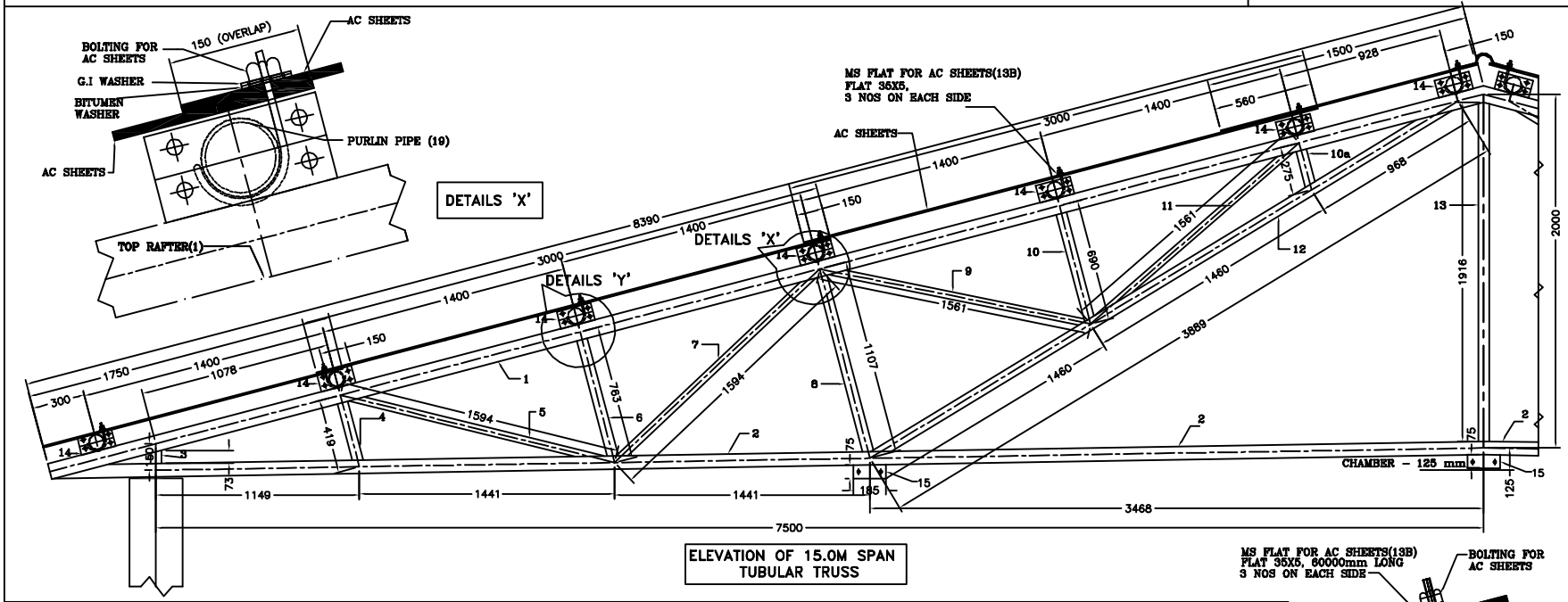

ELEVATION OF 15.0M SPAN TUBULAR TRUSS

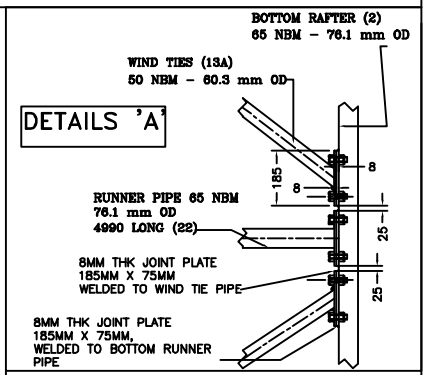

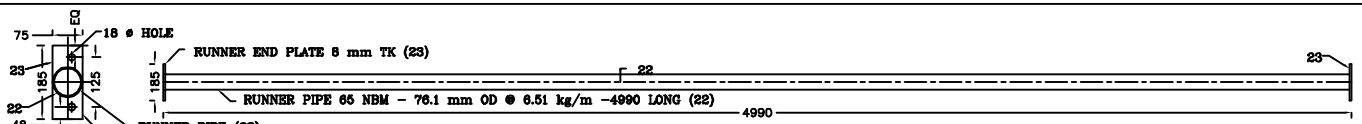

DETAILS OF BOTTOM RUNNER

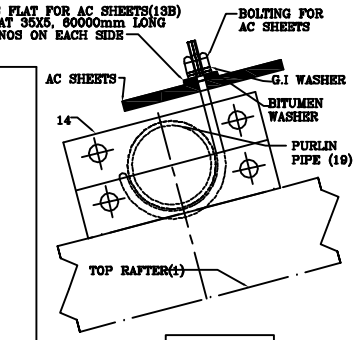

DETAILS 'Y'

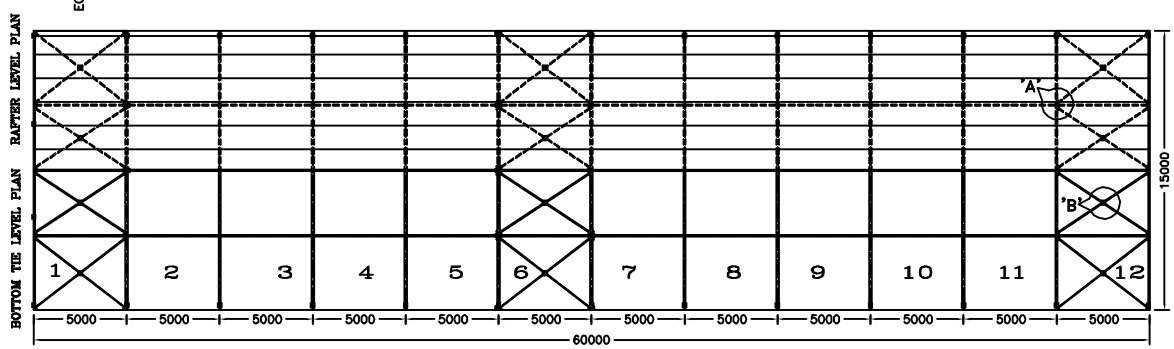

KEY PLAN OF SEMICLOSED/CLOSED SHED

NOTE :

- RB PLATES AND ALL GUSSET PLATES ARE 6 mm THICK
- FIXING BOLTS – 20 mm DIA.
- PURLIN CLEAT CONNECTING BOLTS 16 mm DIA.

GENERAL NOTE :

- ALL DIMENSIONS ARE IN MM
- DO NOT SCALE THE DRAWING.
- ALL MATERIAL SHALL CONFIRM TO IS 1161-1979, IS 226-1975, IS 4923
- ALL WELDING WORK SHALL CONFIRM TO IS 816-1969
- ELECTRODES SHALL CONFIRM TO IS 814-1974
- M.S. BLOCK BOLTS AND NUTS SHALL CONFIRM TO IS 1363-1984
- WASHERS SHALL CONFIRM TO IS 5369-1975, IS 5370-1969, IS 5372-1976 OR IS 5374-1975
- ONE COAT OF RED OXIDE SHALL BE APPLIED PRIOR TO APLLYING THE PAINT APPROVED SPECIFICATION.
- ALL WELDS ARE 6 MM FILLET WELD UNLESS OTHERWISE MENTIONED.
- CHECK THE EXACT DIMENSIONS AT SITE BEFORE FABRICATION
- ANY DISCREPANCY IN THE DRAWING SHOULD BE BROUGHT TO NOTICE BEFORE EXECUTION.

Sr. No.	DESCRIPTION	SPECIFICATIONS	LENGTH/SIZE	QUANTITY
1	TOP RAFTER	80 NBM – 88.9 mm OD @ 8.47 kg/m	8390	13 x 2
2	BOTTOM RAFTER	65 NBM – 76.1 mm OD @ 6.51 kg/m	8080	13 x 2
3	VERTICLE MEMBER	65 NBM – 76.1 mm OD @ 6.51 kg/m	150	13 x 2
4	CROSS STUD	50 NBM – 60.3 mm OD @ 5.10 kg/m	419	13 X 2
5	CROSS STUD	32 NBM – 42.4 mm OD @ 3.14 kg/m	1594	13 x 2
6	CROSS STUD	50 NBM – 60.3 mm OD @ 5.10 kg/m	763	13 x 2
7	CROSS STUD	32 NBM – 42.4 mm OD @ 3.14 kg/m	1594	13 x 2
8	CROSS STUD	50 NBM – 60.3 mm OD @ 5.10 kg/m	1107	13 x 2
9	CROSS STUD	32 NBM – 42.4 mm OD @ 3.14 kg/m	1561	13 x 2
10	CROSS STUD	50 NBM – 60.3 mm OD @ 5.10 kg/m	690	13 x 2
10a	CROSS STUD	50 NBM – 60.3 mm OD @ 5.10 kg/m	275	13 x 2
11	CROSS STUD	32 NBM – 42.4 mm OD @ 3.14 kg/m	1561	13 x 2
12	CROSS STUD	50 NBM – 60.3 mm OD @ 5.10 kg/m	3890	13 x 2
13	VERTICLE MEMBER	65 NBM – 76.1 mm OD @ 6.51 kg/m	8000	13 x 1
13A	WIND TIES PIPE	50 NBM – 60.3 mm OD @ 5.10 kg/m	6300	8 X 3
13B	MS FLAT FOR AC SHEETS	FLAT 35X5	60000	3 X 2
13c	WINDTIE CONN.PL.	185X75MM		8 X 4 X 3
13d	CONNC. PLATES 8MM	8100X185MM		2 X 4 X 3
18	FIXING BOLT	20 mm ø	120	(13+2) x 2 x 6
14	PURLIN CLEAT	10 mm PLATE @ 78.5 kg/sqm	200X100	13 x 14
15	RUNNER CLEAT	8 mm PLATE @ 62.8 kg/sqm	185x75	13 x 3
16	BASE PLATE TOP	20 mm PLATE @ 157 kg/sqm	345x345	(13+2) x 2
17	SHOE ANGLE	ISA 75X75X6 @ 6.8 kg/m	345	(13+2) x 2 x 2
18	FIXING BOLT	20 mm ø	120	(13+2) x 2 x 6
19	PURLIN PIPE	80 NBM – 88.9 mm OD @ 8.47 kg/m	4990	12 x 14
20	PURLIN END PLATE	8 mm PLATE @ 62.8 kg/m	200x100	12 x 14 x 2
21	PURLIN BOLT	16 mm ø		12 x 14 X 4
22	BOTTOM RUNNER	65 NBM – 76.1 mm OD @ 6.51 kg/m	4990	12 x 3
23	RUNNER END PLATE	8 mm PLATE @ 62.8 kg/m	185x75	12 x 3 x 2
24	RUNNER BOLT	16 mm ø		12 x 3 x 2
FOR CLADDING				
25	PIPE	65 NBM – 76.1 MM OD @ 6.51 KG/M	4990	12X2X3 =72 PIECES
26	PIPE END	65 NBM – 76.1 MM OD @ 6.51 KG/M	4990	1X(2+3)X2=15PIECE
27	MS PL.	8 mm PLATE @ 62.8 kg/sqm	200X75	3X2X(13+2)= 90
28	MS BOLT	12 mm ø		8x(90)=180
FOR COLUMN				
29	COLUMN PROPER	ROK OUT OF ISMC-250X80 -830.6KG/M	5000	12X2+2X2) X2=60
30	STIFFENER PLATE	20 mm PLATE @ 157 kg/sqm	170X150MM	30X1X2=60 NOS
31	STIFFENER PLATE	10 mm PLATE @ 78.5 kg/sqm	170X150MM	30X3X2=180 NOS
32	MS BOLT FOUNDATION	16mm ø,600LONG(4NS FOR EACH COL)	1000	4x(30)=180 NOS
33	MS BOLT FOUNDATION	20mm ø, 600MLONG(2NS FOR EACH COL)	1000	2x(30)=60 NOS
34	BASE PLATE BOT.	20 mm PLATE @ 157 kg/sqm	330x330	(13+2) x 2
35	BEARING PLATE	16 mm PLATE @ 125.6 kg/sqm	340x340	(13+2) x 2

PROJECT :
5 X 270MW – INDIABULLS, AMRAWATI MAHARASHTRA.

BHARAT HEAVY ELECTRICALS LIMITED

TITLE : DETAILS OF 15.00 m SPAN TUBULAR TRUSS FOR CLOSED/SEMI CLOSED SHED

DRG NO– BHE/PW/CS/SS–08

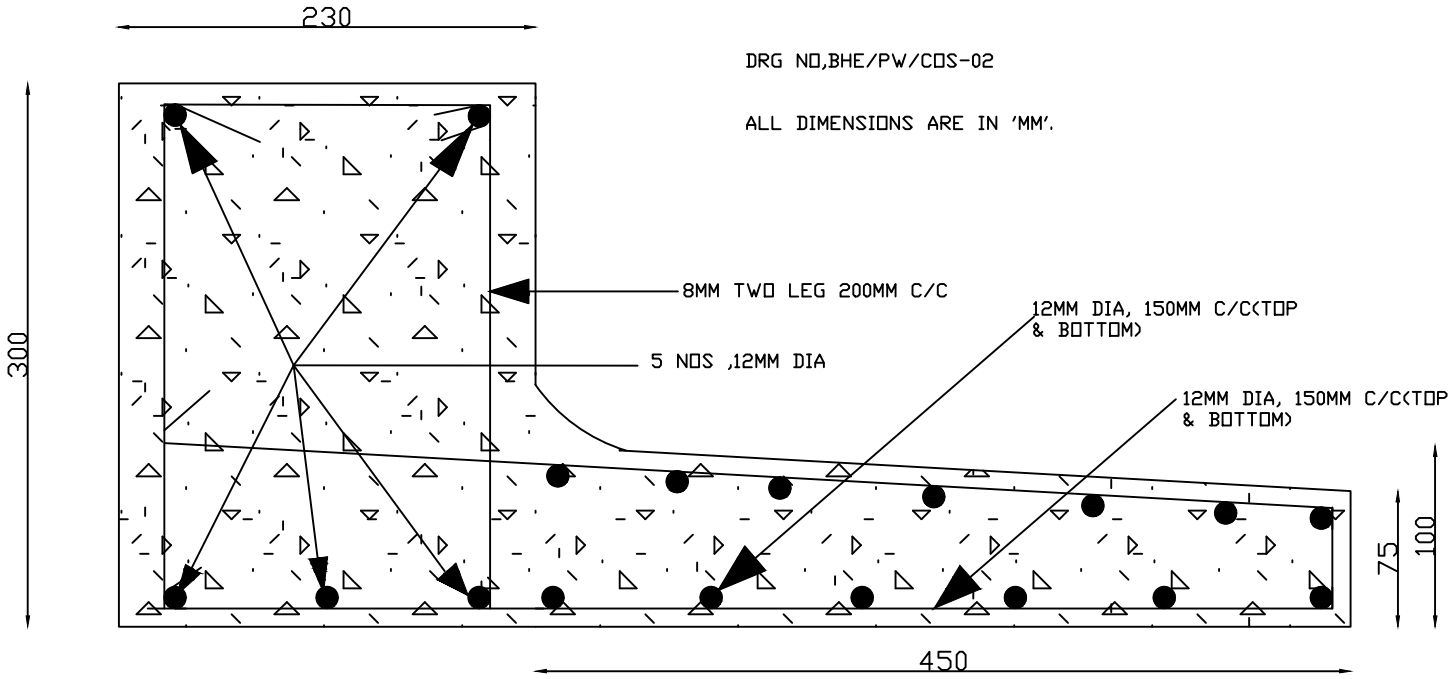

SECTION OF LINTEL & SUN SHED PROJECTION FOR CLOSED SHED

Note:
C/C DISTANCE BETWEEN COLUMN IS 4 M

12000 MM
4000 MM
W1
W1
W1
D3
V1
1800 MM
3000MM
CM CABIN
1200MM
3500MM
3.1M HEIGHT,230MM WALL
3500MM
3000MM
FINANCE CABIN
DOCUMENTATION ROOM
3000MM
5000MM
3.1 M HEIGHT,230MM WALL
D1
D1
D1
SOAK PIT
SEPTIC TANK
8000 MM
2000 MM PASSAGE
3.1M HEIGHT,230 MM WALL
D1
D1
D1
D1
D2
DOOR (D),WINDOW (W) VENTILATOR (V) details
D1-WOODEN DOOR 900 X 2100 MM
D2-WOODEN DOOR 750 X 2100 MM
D3-PVC DOOR 600 X 2100 MM
D4- STEEL DOOR 1200 X 2100 MM
W1-STEEL GLAZED WINDOW 1350 X 1200 MM
V1-STEEL LOUVERED VENTILATOR 600 X 450 MM
3.1M HEIGHT,230MM WALL
3000MM
ROOM 1
4000MM
2000MM WIDE PASSAGE
3000MM
3.1M HEIGHT,230MM WALL
ROOM 2
6000MM
1455MM
TOILET WITH RCC ROOF
D3 D3
1372MM
1200MM
W1
W1
W1
D4
2M WIDE VERANDAH
V1
V1
2770MM

DESCRIPTION	ceramic tiles	IPS	OBD	FALSE CEILING	GLAZED TILE	DADO	SKIRTING	12 MM PLASTER
CM CABIN	Y		Y	Y				Y
FIN,DOC,ROOM 1,2		Y	Y	Y				Y
CM TOILET & TOILET			Y		Y	Y	Y	Y

PROJECT	2X660MW NTPC SOLAPUR
TITLE	LAYOUT OF OFFICE
DRG NO	BHE/PW/OFFICE-01/01

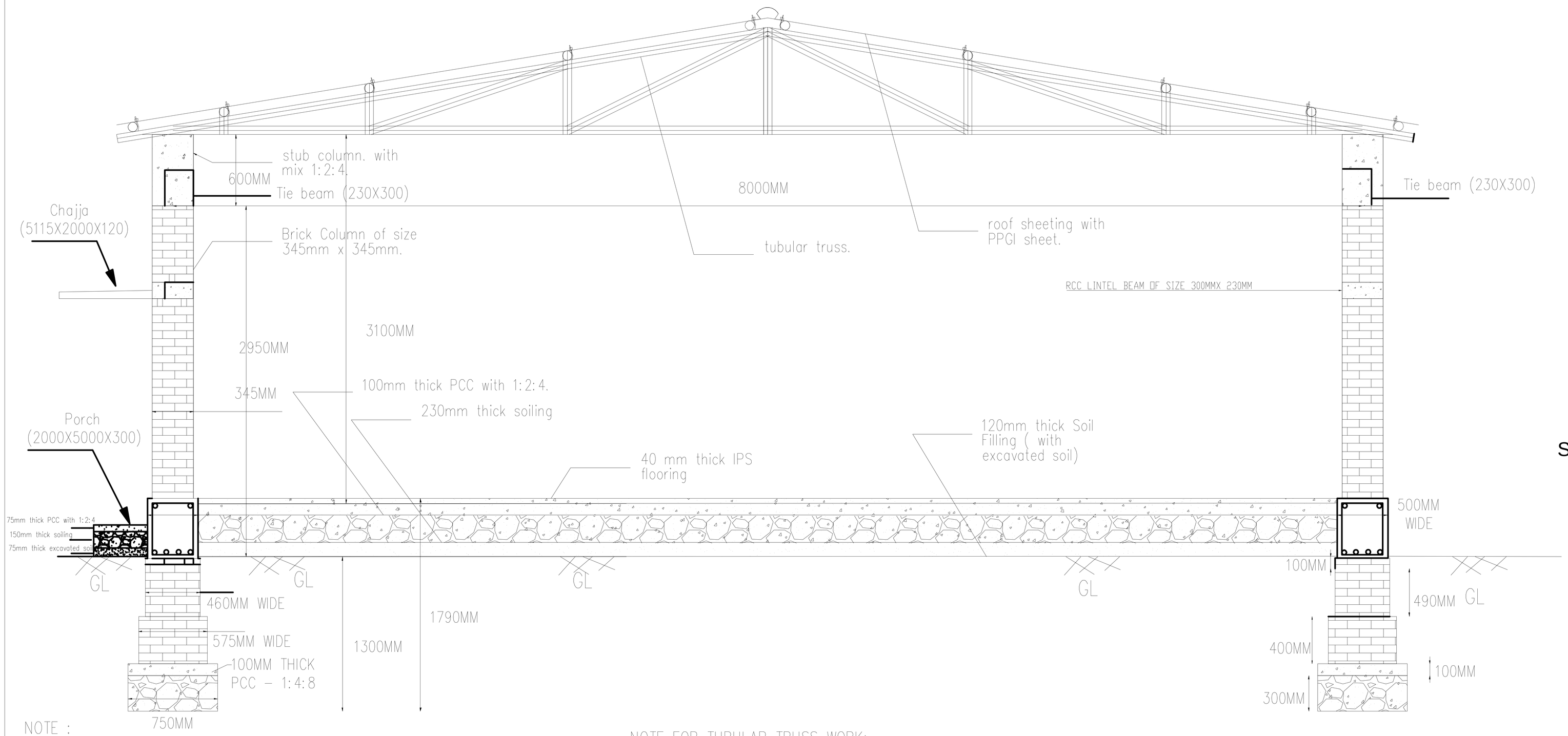

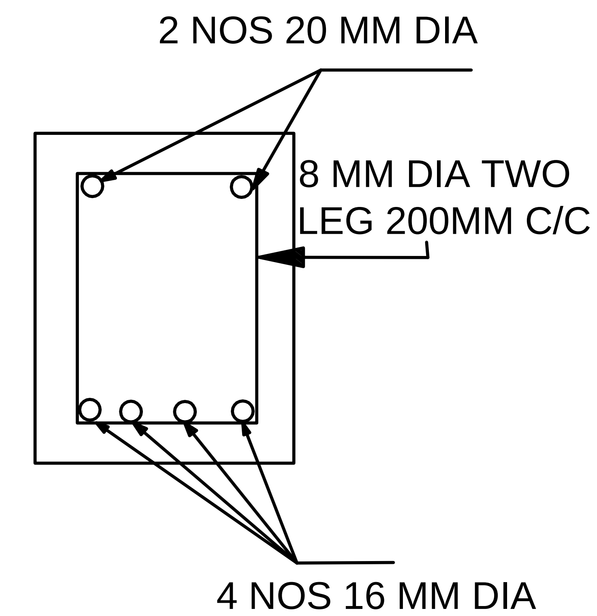

SECTION OF PLINTH BEAM (400X500MM)

NOTE :

1. FOOTING SHALL BE STRIP FOOTING ALL ALONG THE ALL EXTERNAL AND INTERNAL WALLS.
2. DETAILS FOR INTERNAL WALL FOOTING SHALL BE AVAILABLE IN DRG NO BHE/PW/OFFICE-01/03.
3. SIZE OF THE BRICK COLUMN SHALL BE 345MMX345MM.
4. FINISHING DETAILS AND DOOR , WINDOW AND VENTILATORS DETAILS SHALL BE REFERRED FROM DRG NO BHE/PW/OFFICE 01/01.
5. SEPTIC TANK AND SOAK PIT FOR TOILET BLOCK SHALL BE CONSTRUCTED NEAR TO THE TOILET BLOCK. DETAILS FOR THE SAME IS AVAILABLE IN THE RESPECTIVE DRAWINGS.

NOTE FOR TUBULAR TRUSS WORK:

1. TENTATIVE TRUSS DETAILS FOR DESIGN CONSIDERATION.
2. CLASS B - MEDIUM QUALITY PIPE SHALL ONLY BE USED.
3. PURLING-65MM DIA.
4. MAIN RAFTER-80MM DIA.
5. VERTICAL POST - AT CENTER-80MM DIA.
6. OTHER VERTICAL POST AND BRACING- 65-45MM DIA.
7. VERTICAL POST FOR VARANDHA TRUSS - 65-80MM DIA.
8. PROVISION SHALL BE MADE AVAILABLE FOR HOLDING OF FALSE CEILING AND OTHER ELECTRICAL FITTING ETC.

PROJECT	2 X 660 MW NTPC SOLAPUR
TITLE	CROSS SECTIONAL VIEW OF SITE OFFICE
DRG NO	BHE/PW/OFFICE-01/02

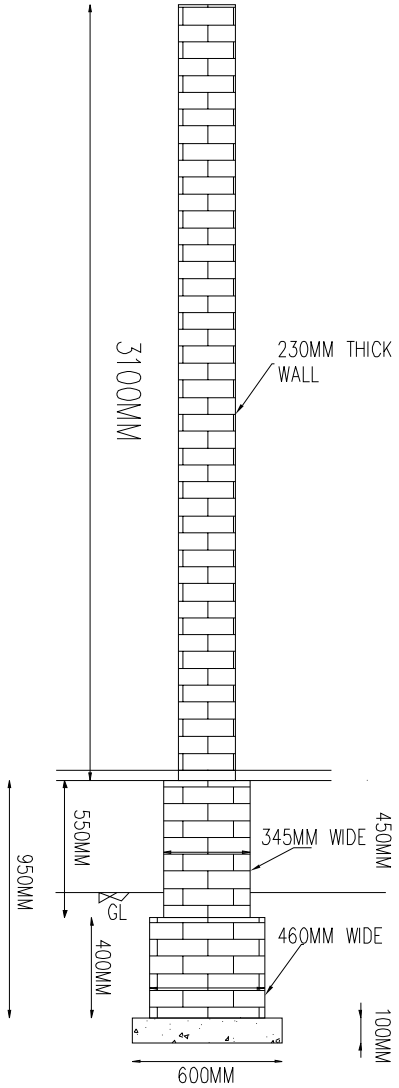

INTERNAL WALL COLUMN/ FOUNDATION

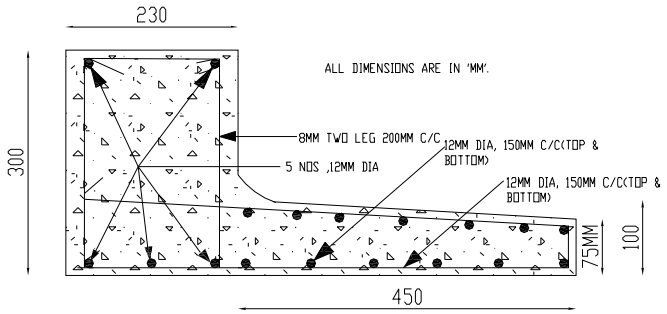

SECTION OF LINTEL & SUN SHED PROJECTION FOR WINDOW

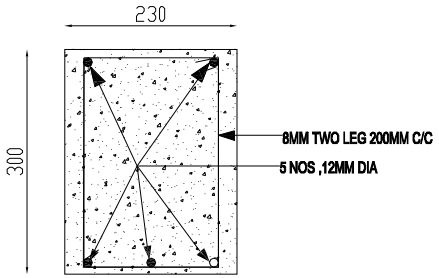

SECTION OF TIE BEAM (230MM X 300MM)

ALL DIMENSIONS ARE IN 'MM'.

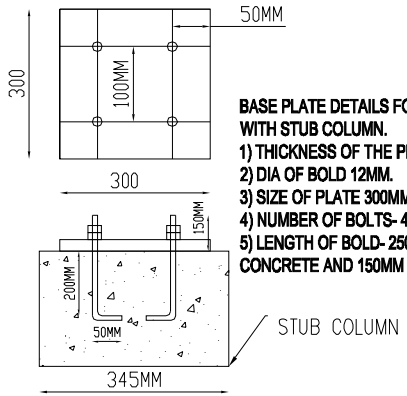

BASE PLATE DETAILS FOR TRUSS CONNECTION WITH STUB COLUMN.

1) THICKNESS OF THE PLATE - 16MM.
2) DIA OF BOLD 12MM.
3) SIZE OF PLATE 300MM X 300MM.
4) NUMBER OF BOLTS- 4 NOS.
5) LENGTH OF BOLD- 250 MM EMBEDDED IN THE CONCRETE AND 150MM ABOVE CONCRETE.

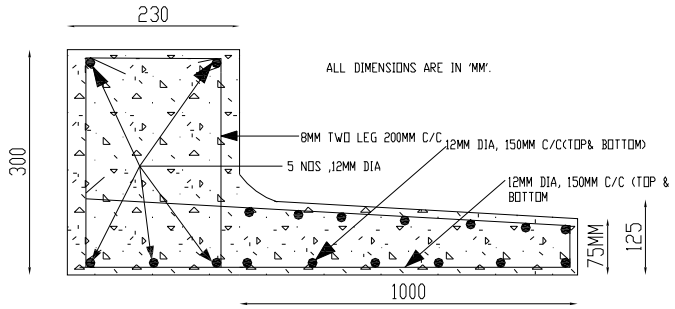

SECTION OF LINTEL & SUN SHED PROJECTION FOR STEEL DOOR AT SITE OFFICE

DETAILS OF MEMBERS OF SITE OFFICE BUILDING.

PROJECT	2 X 660 MW NTPC SOLAPUR
TITLE	MISCELLANEOUS DETAILS
DRG NO	BHE/PW/OFFICE-02/02

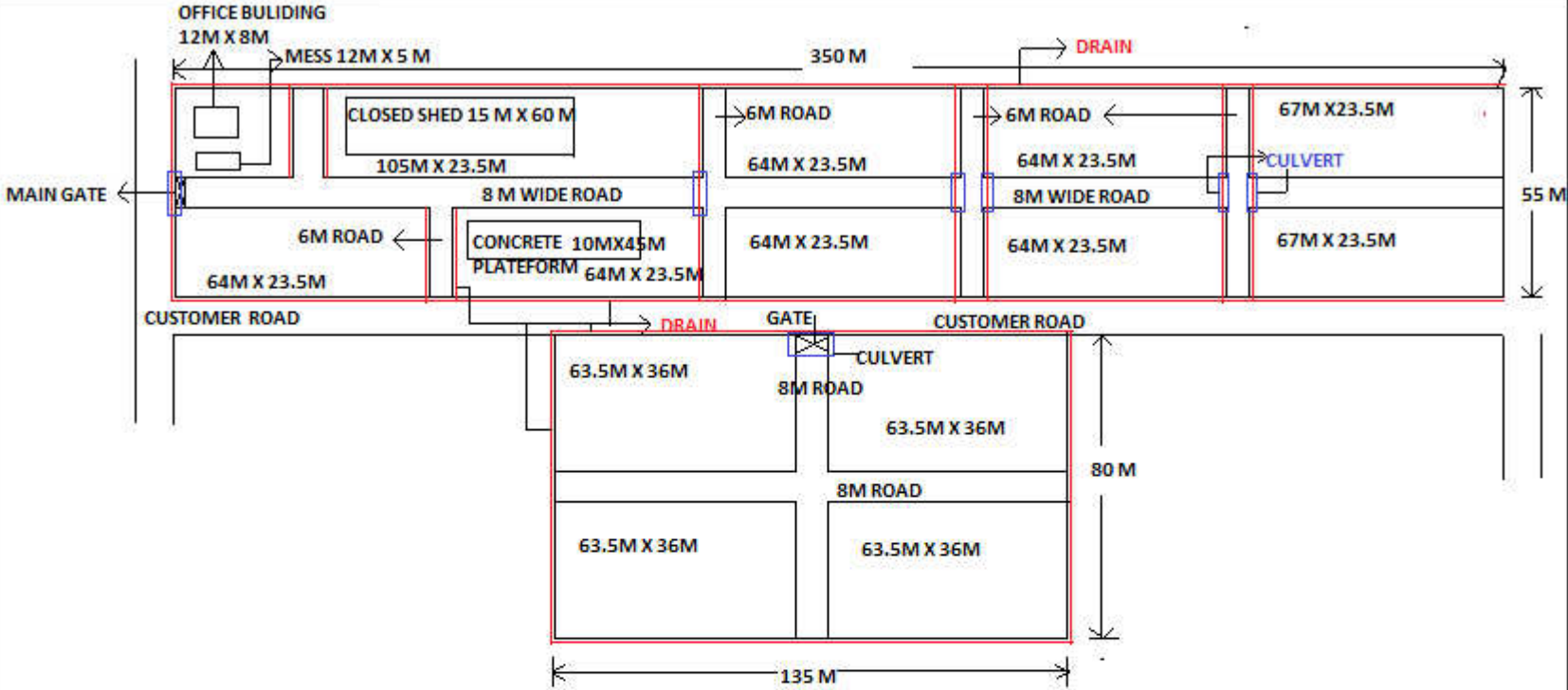

NOTE:

1. CLOSED STORAGE SHED, SITE OFFICE BUILDING, MESS BUILDING, CONCRETE PLATEFORM TO BE LOCATED SUITABLY IN OPEN STORE YARD WITH PROPER DEVELOPMENT AS PER BOQ ITEMS.
2. MONSOON YARD (4500 SQM.) AREA TO BE DEVELOPED BY 200 MM THICK COMPACTED HARD MURUM.
3. ROAD CROSSING CULVERT (RCC HUME PIPE) OVER THE DRAIN.

LAYOUT OF OPEN STORAGE YARD (30,000 SQM. APPROX)

THIS DRAWING IS PURELY INDICATIVE AND FOR GENERAL IDEA PURPOSE OF BIDDERS ONLY.
HOWEVER REALISTIC LAYOUT INLINE WITH BOQ SHALL BE MADE BY SUCCESSFUL BIDDER AFTER RECEIVING LAND FROM CUSTOMER.

THIS COLOUR SHOWS DRAIN AT PERIPHERY AND INSIDE THE AREA.
THIS COLOUR BOX SHOWS THE CULVERT OVER THE DRAIN.
THIS SHOWS ENTRANCE GATE.

PROJECT: 2 X 660 MW NTPC SOLAPUR

TITLE: LAYOUT OF OPEN STORAGE YARD (30,000 SQM) TENTATIVE DRAWING

DRG. NO. : BHE/PW/OY-01

OWNER: BHEL- PSWR NAGPUR

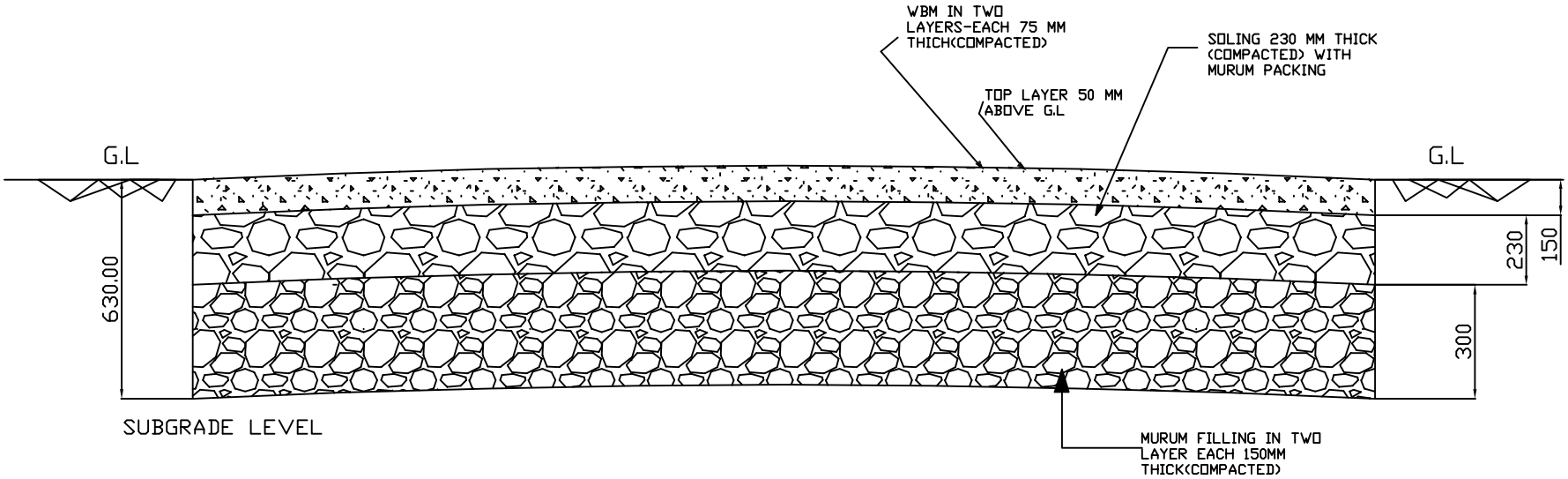

ALL DIMENSIONS ARE IN MM

SECTIONAL DETAILS OF 8/6 M WIDTH WBM ROAD

NOTE:
1)CAMBER SHALL BE MAINTAINED FROM THE SUBGRADE LEVEL
2)IN CASE SOFT/HARD ROCK MAT WITH SUBGRADE IS FOUND THAN 150MM THICH MURUM SHALL BE LAID INPLACE OF 300 MM THICK MURUM FILLING.

PROJECT:	**2 X 660 MW NTPC SOLAPUR**
TITLE:	SECTION OF 8/6 M WIDTH WBM ROAD
DRG. NO. :	BHE/PW/OY- 02

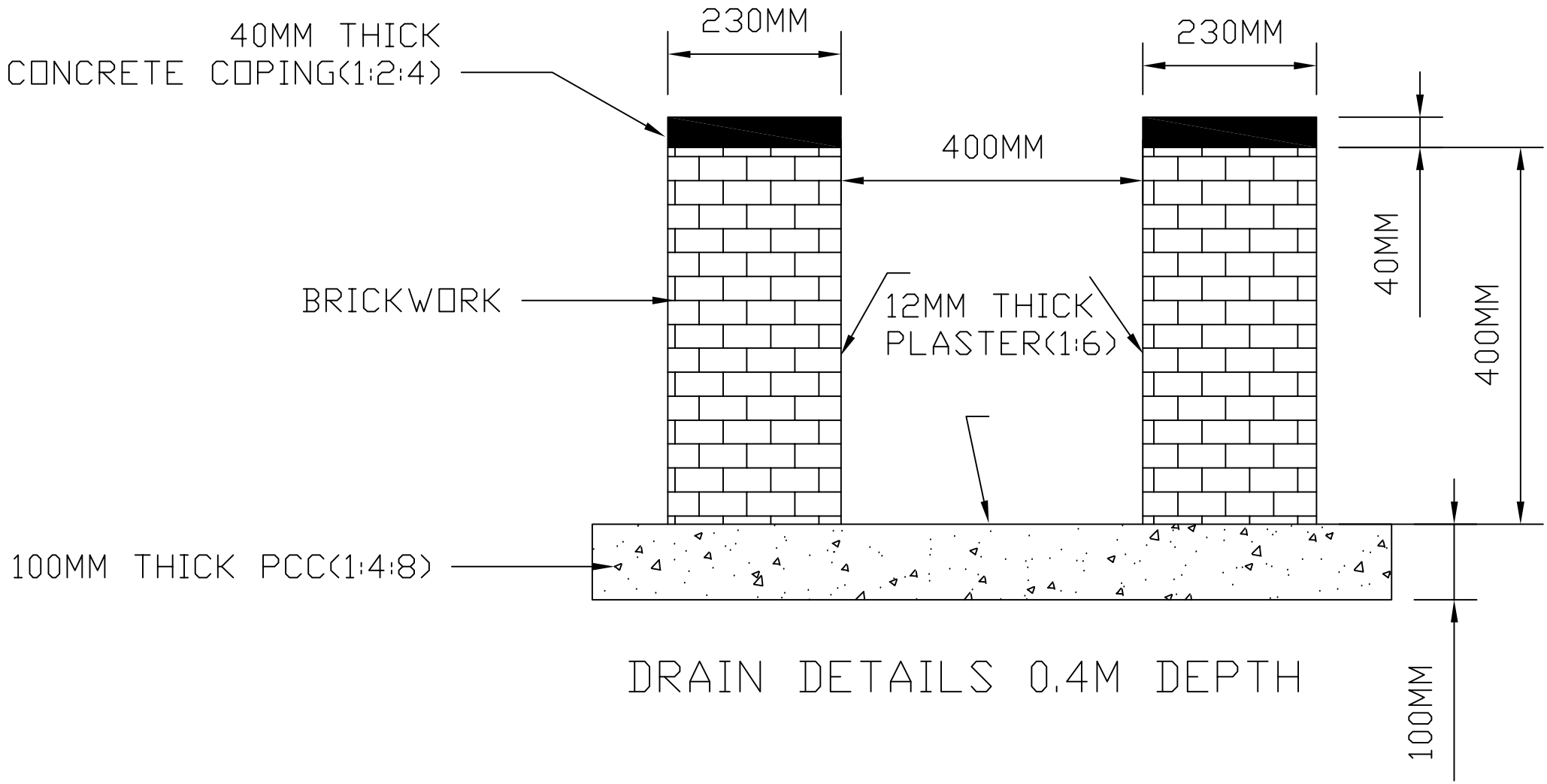

DRAIN DETAILS 0.4M DEPTH

DETAILS OF 0.4M DEPTH DRAIN

PROJECT: **2 X 660 MW NTPC SOLAPUR**
TITLE: DETAILS OF 0.4M DEPTH DRAIN
DRG. NO. BHE/PW/OY- 03

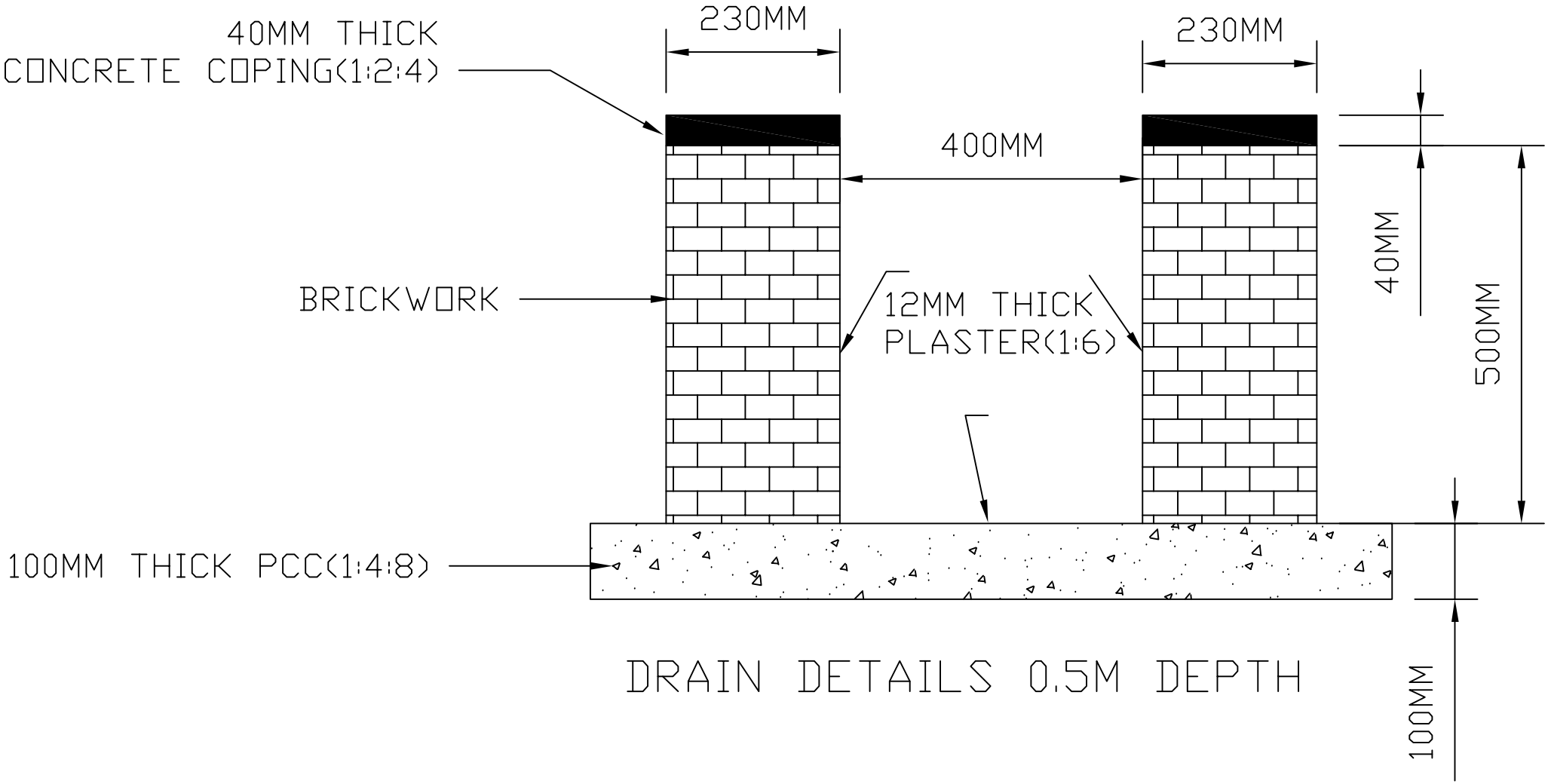

DRAIN DETAILS 0.5M DEPTH

DETAILS OF 0.5M DEPTH DRAIN

PROJECT: **2 X 660 MW NTPC SOLAPUR**
TITLE: DETAILS OF 0.5M DEPTH DRAIN
DRG. NO. BHE/PW/OY- 04

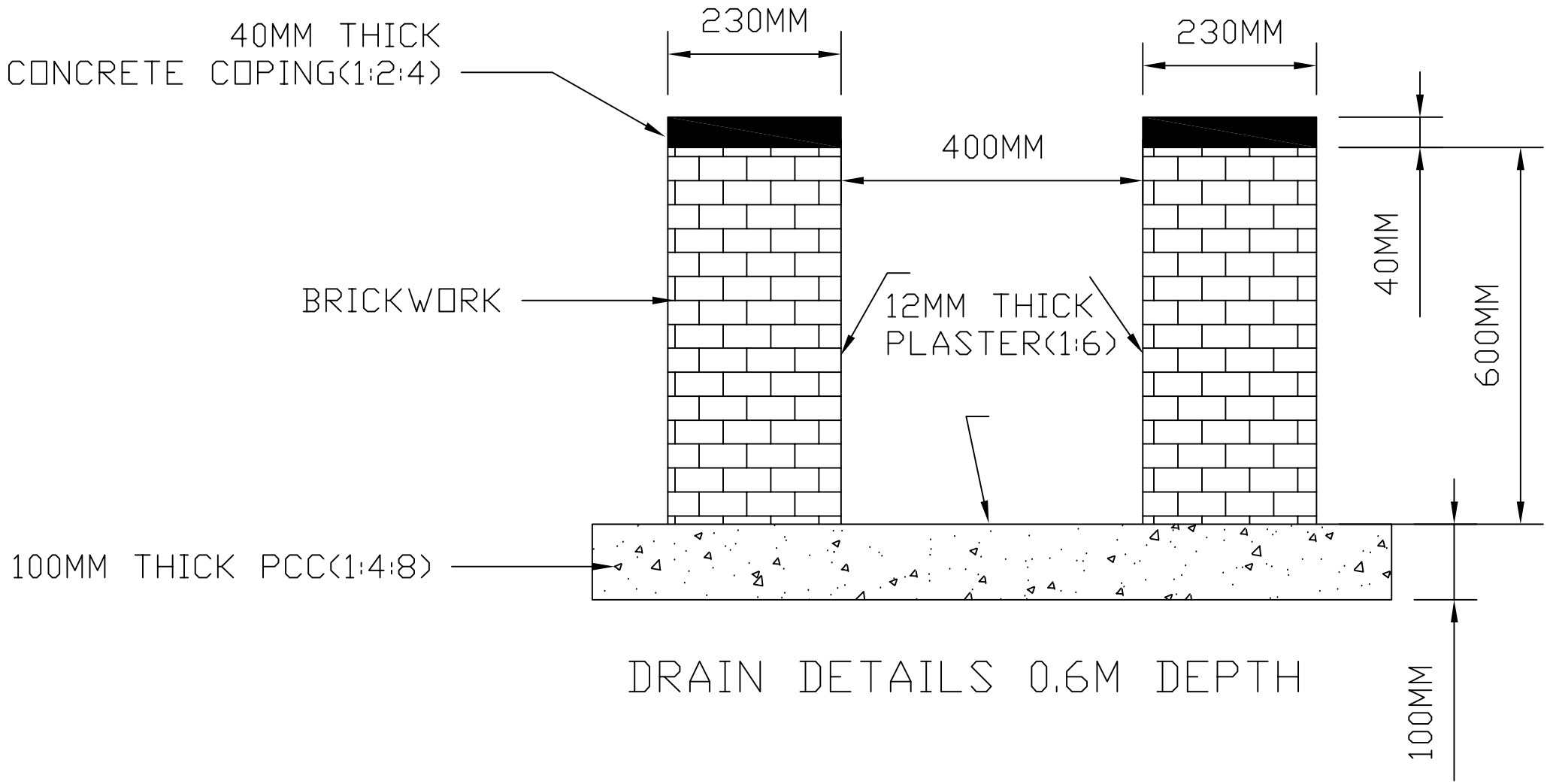

DRAIN DETAILS 0.6M DEPTH

DETAILS OF 0.6M DEPTH DRAIN

PROJECT: **2 X 660 MW NTPC SOLAPUR**
TITLE: DETAILS OF 0.6M DEPTH DRAIN
DRG. NO. BHE/PW/OY- 05

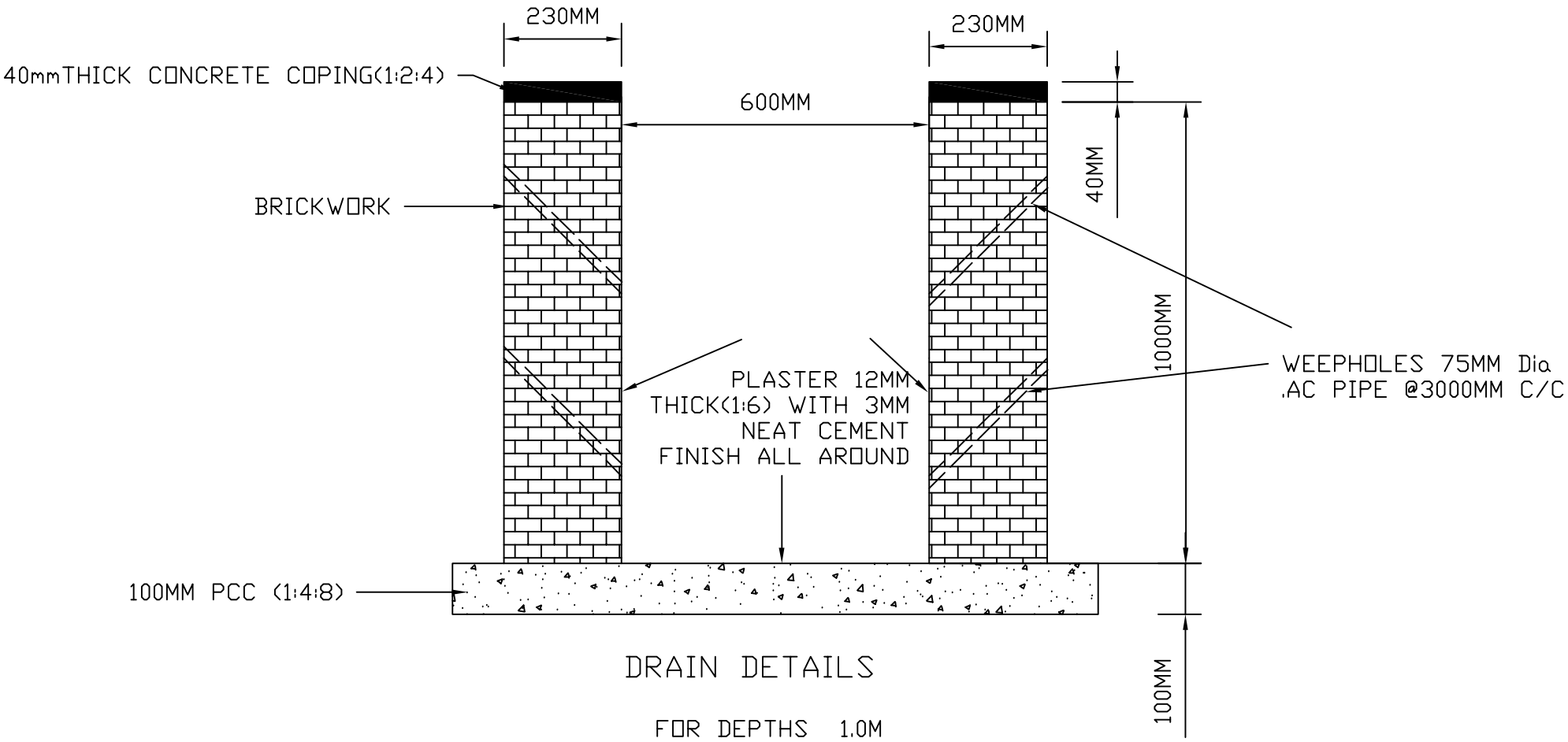

DRAIN DETAILS

FOR DEPTHS 1.0M

DETAILS OF 1.0M DEPTH WITH 600MM WIDE DRAIN

PROJECT:	2 X 660 MW NTPC SOLAPUR
TITLE:	1.0 M DEPTH DRAIN
DRG. NO. :	BHE/PW/OY-08

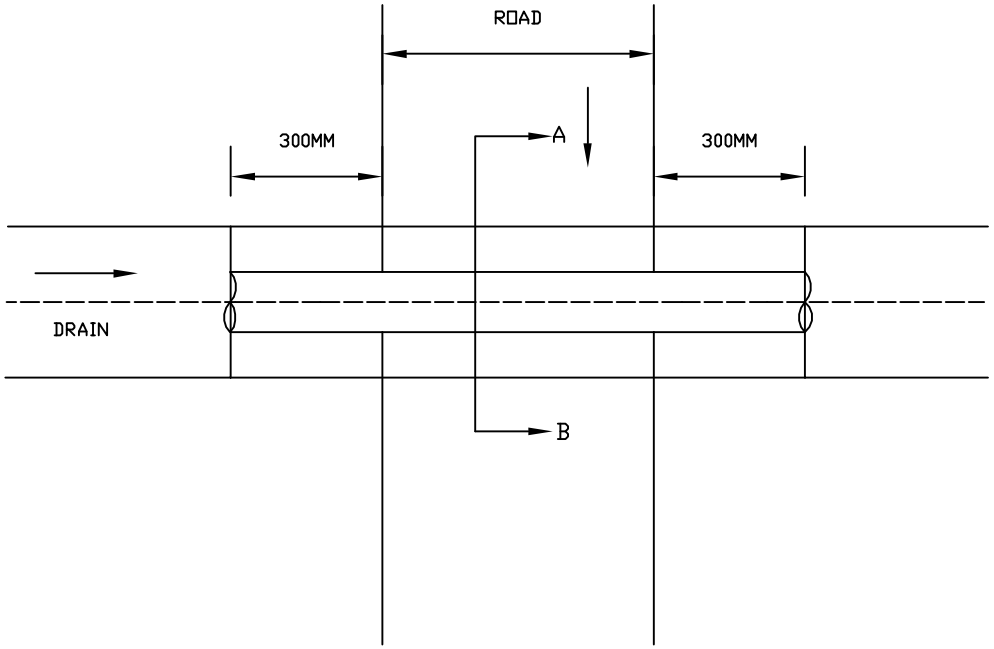

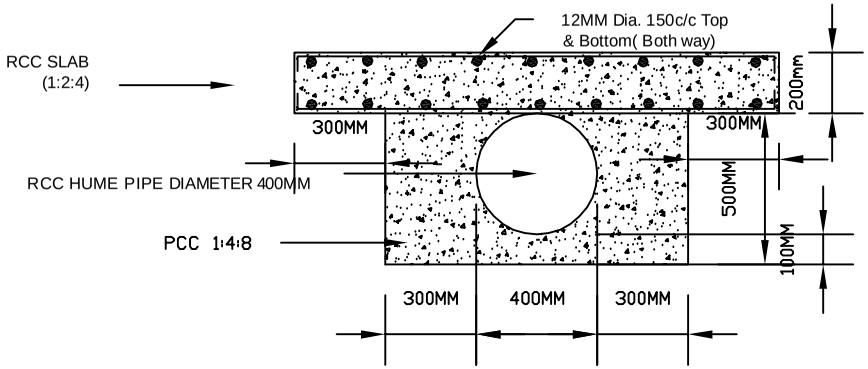

CULVERT DETAILS ON
SECTION A - B

CULVERT DETAILS FOR 400MM DIA, RCC HUME PIPE

PROJECT :- 2 X 660 MW NTPC SOLAPUR

TITLE :- CULVERT DETAILS FOR 400 MM DIA, RCC HUME PIPE

DRG NO. :- BHE/PW/OY-09

OWNER :- बी एच ई एल BHEL BHEL-PSWR NAGPUR

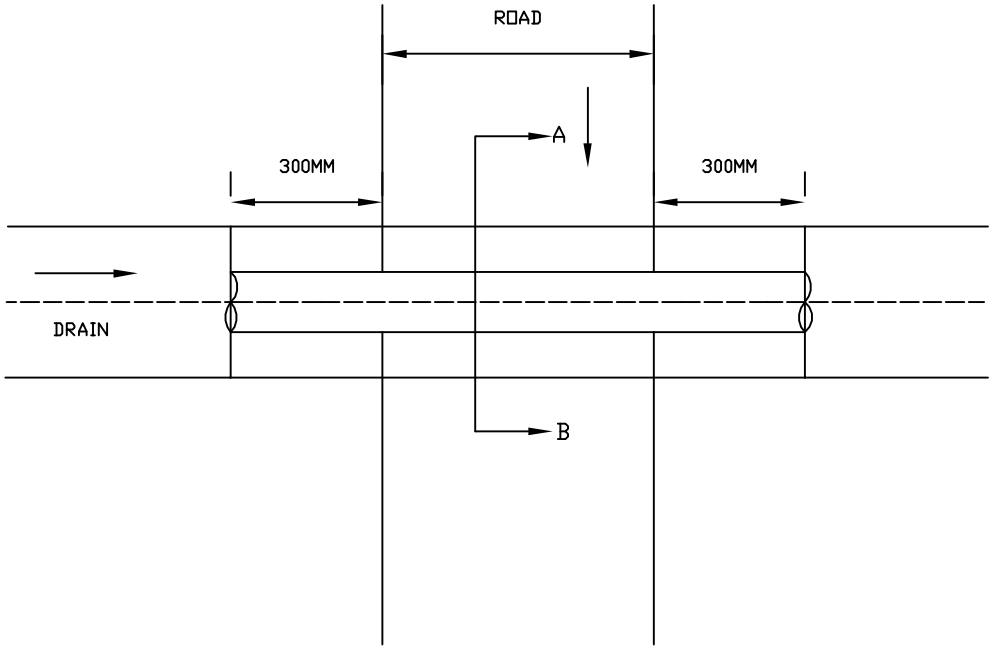

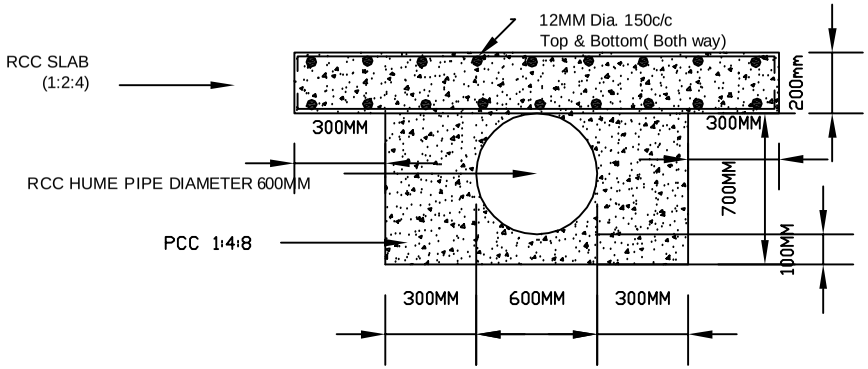

CULVERT DETAILS ON
SECTION 'A - B'

CULVERT DETAILS FOR 600MM DIA,RCC HUME PIPE

PROJECT	:- 2 X 660 MW NTPC SOLAPUR
TITLE	:- CULVERT DETAILS FOR 600 MM DIA, RCC HUME PIPE
DRG NO.	:- BHE/PW/OY-10
OWNER	:- BHEL-PSWR NAGPUR

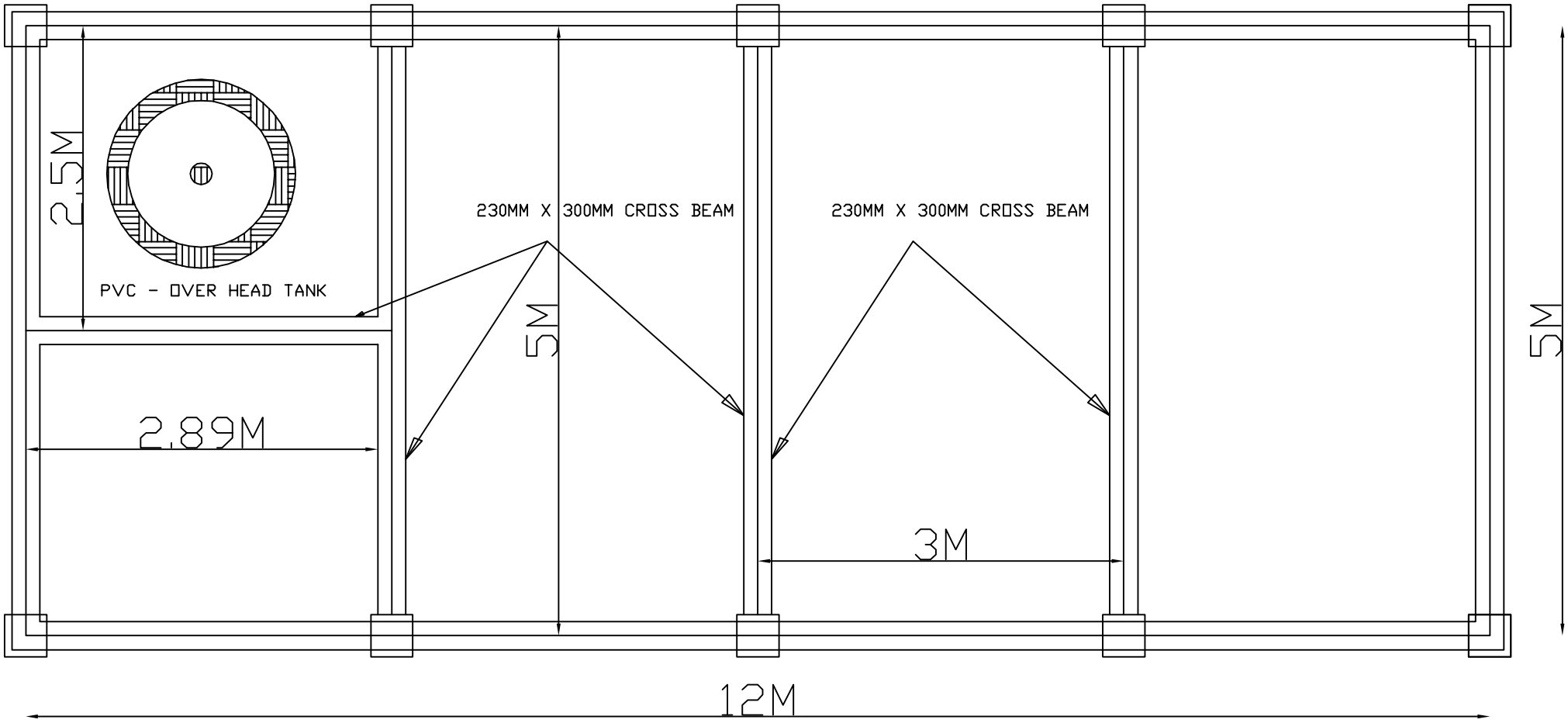

PLAN VIEW OF MESS BUILDING 5MX12M C/C

PROJECT: MESS BUILDING AT 2X660 MW NTPC SOLAPUR
DRG. NO. : BHE/PW/MESS - 1 OF 4

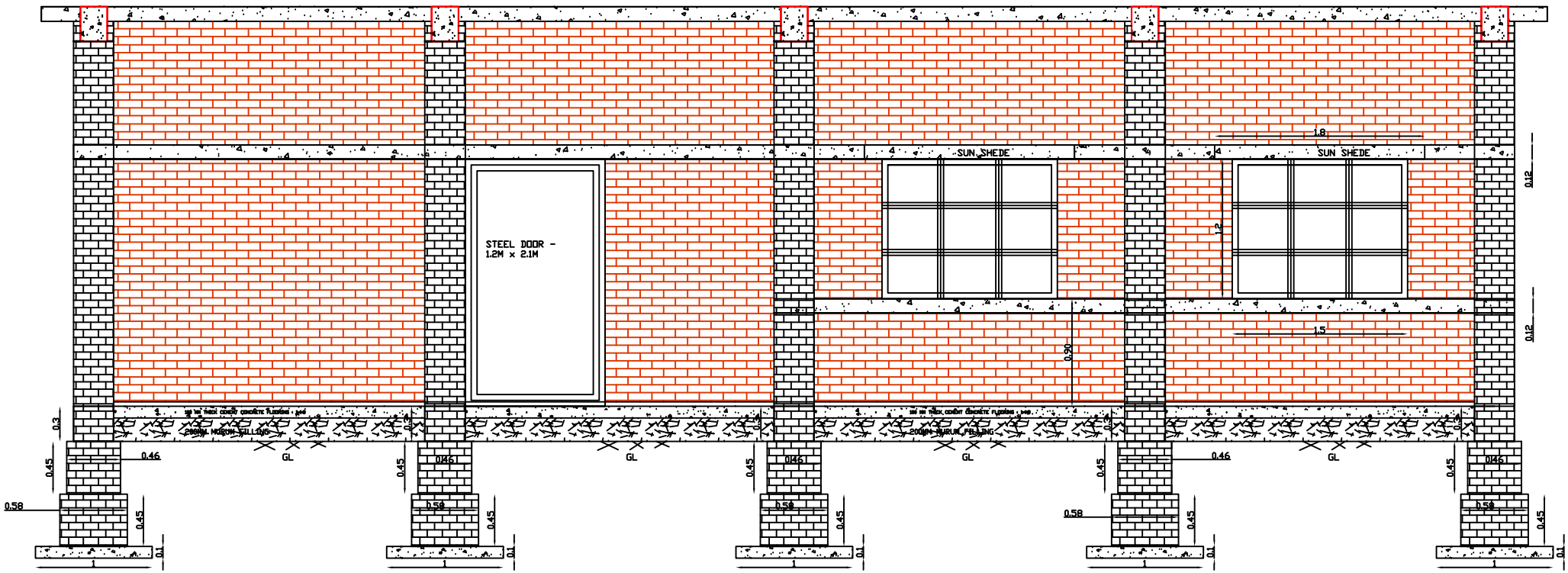

FRONT ELEVATION

PROJECT: MESS BUILDING AT 2X660 MW NTPC SOLAPUR

DRG. NO. : BHE/PW/MESS - 2 OF 4

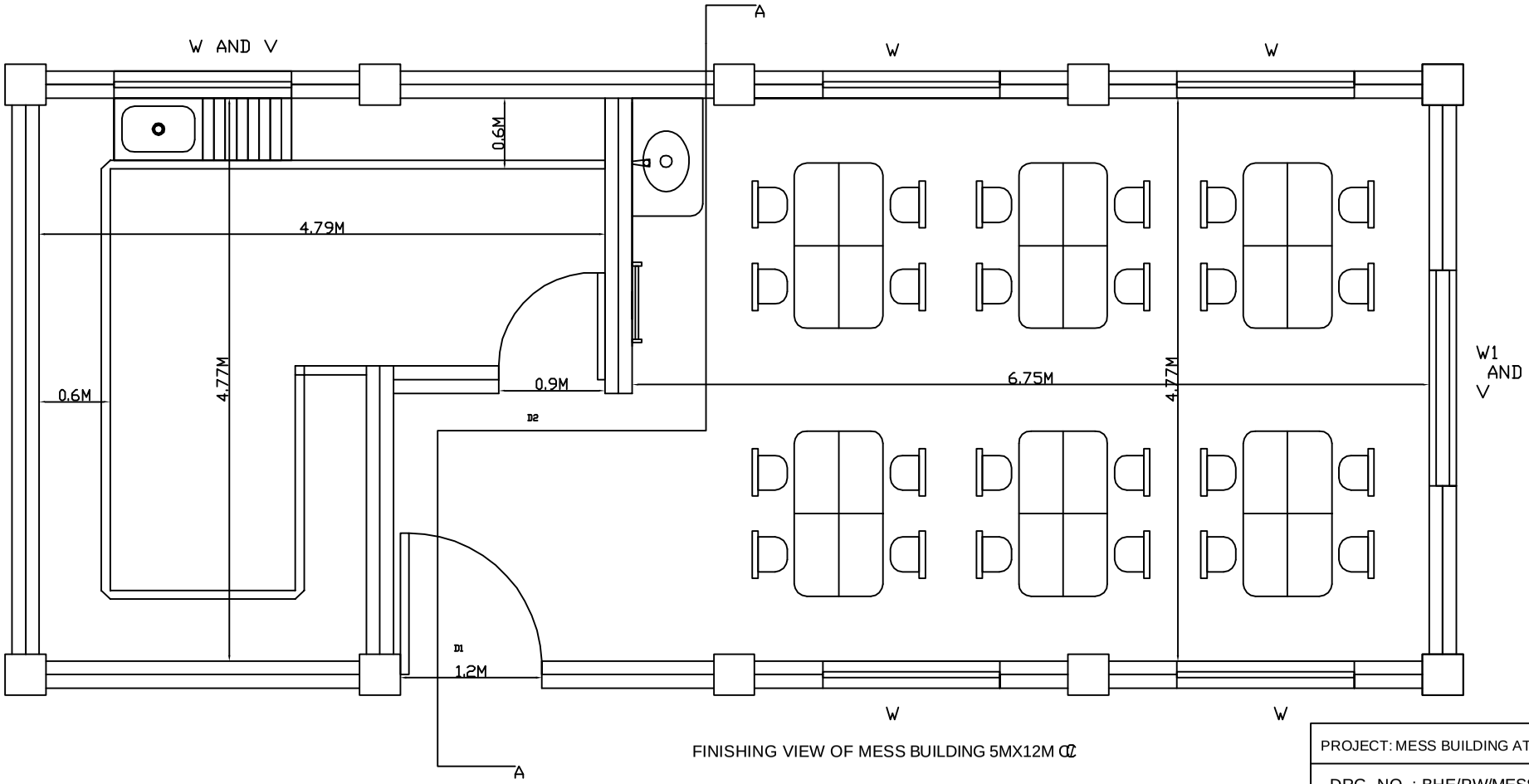

FINISHING VIEW OF MESS BUILDING 5MX12M CC

PROJECT: MESS BUILDING AT 2X660 MW NTPC SOLAPUR

DRG. NO. : BHE/PW/MESS - 3 OF 4

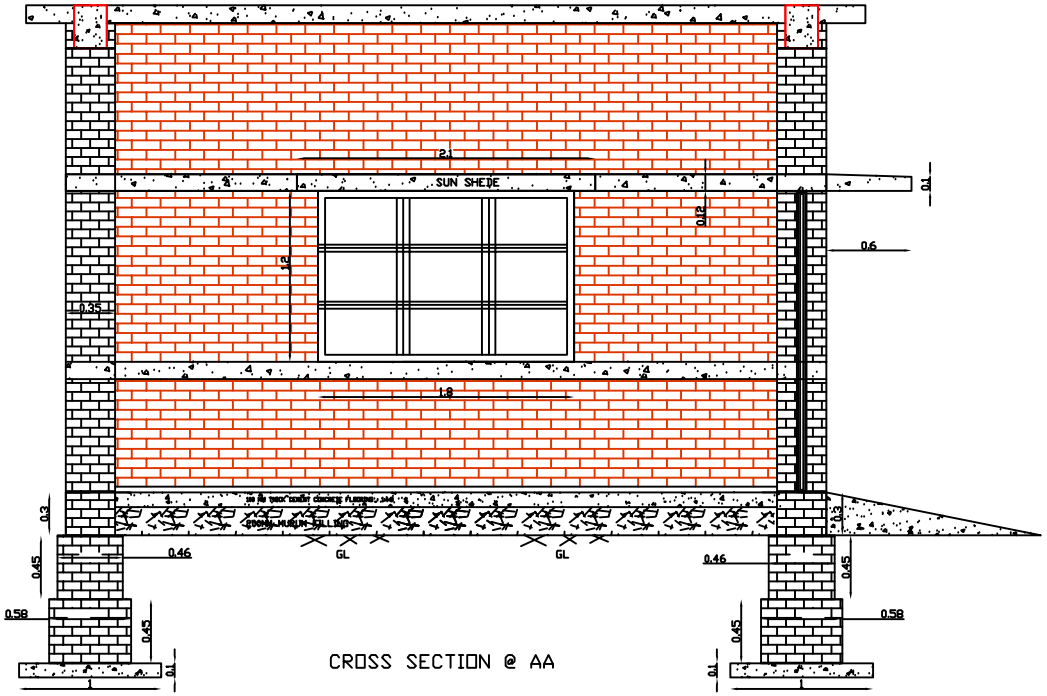

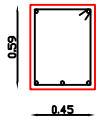

5No. 12mm dia Main bar (3No.bottom & 2No. top)
8mm dia Stirrups bar 200mm c/c

Beam (230mm x 300mm)

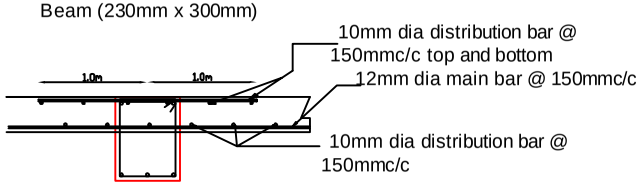

NOTE

- W - STEEL WINDOW - 1.5M x 1.2M
- W1 - STEEL WINDOW - 1.8M X 1.2M
- V- VENTILATOR - 600MM X 450MM
- D1- STEEL DOOR - 1.20M X 2.1M
- D2 - WOODEN DOOR - 0.90M X 2.1M.
- SIZE OF COLUMN SHALLBE -350MM X 350MM.
- THICHNESS OF WALL SHALL BE 230MM.
- THICKNESS OF SLAB SHALL BE 125MM.
- RCC CROSS BEAM SHALL BE PROVIDED AS PER THE DRAWING AND EXTRA CROSS BEAM SHALL BE PROVIDED FOR PLACING OF OVER HEAD TANK.
- BED BLOCK SHALL BE PROVIDED AS A LINTEL BEAM OF 120MM THICK WITH 3 NOS 8MM DIA BAR.
- SUN SHADE SHALL BE PROVIDED AS A LINTEL LEVEL WITH 120MM THICK RCC BLOCK WITH MILD SLOPE AND NOMINAL BAR.

ALL DIMENSIONS ARE IN METER UNLESS OTHERWISE MENTIONED

PROJECT: MESS BUILDING AT 2 X 660 MW NTPC SOLAPUR
DRG. NO. : BHE/PW/MESS - 4 OF 4

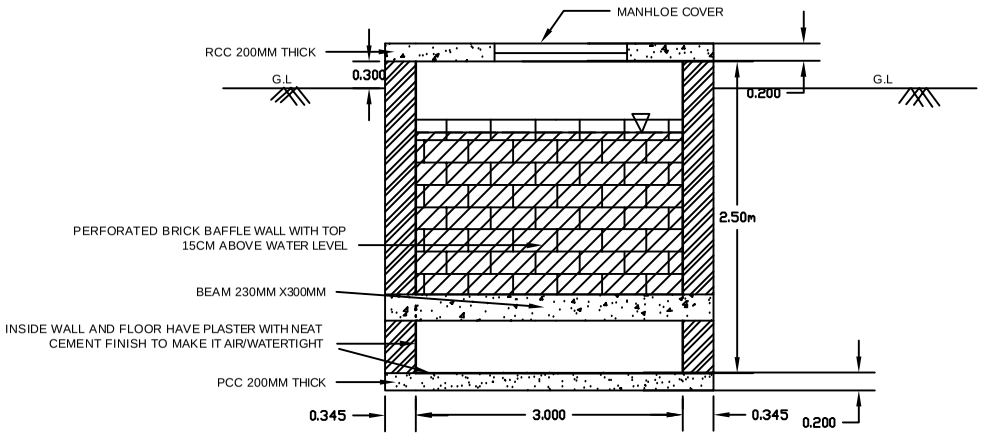

SECTION A-A

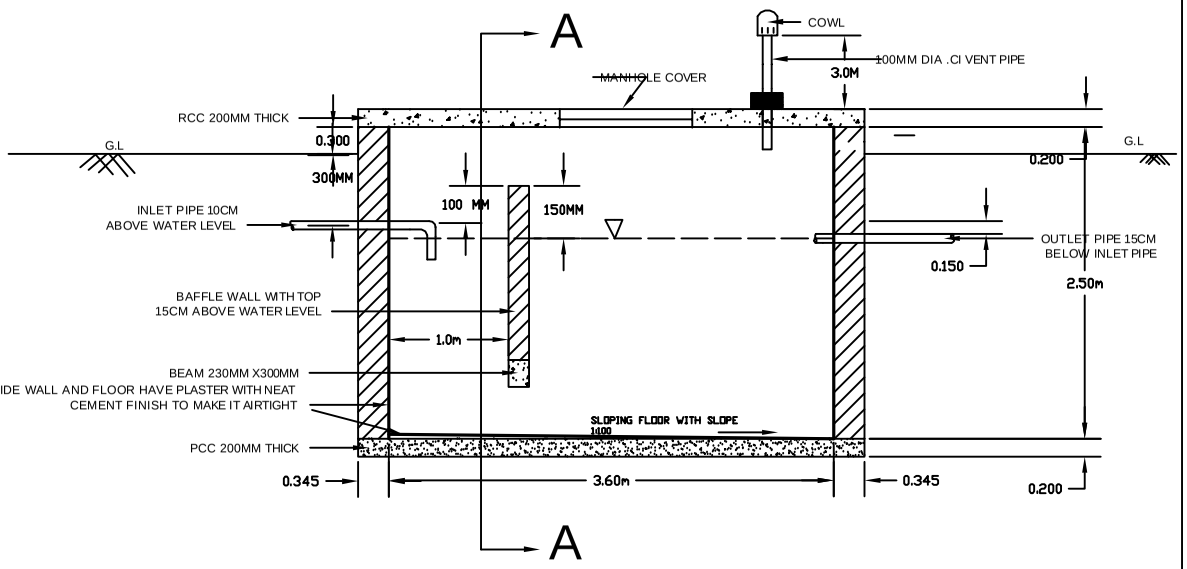

SEPTIC TAN□□□.□M □ □.0M □□.□M□

NOTE : F.B 30-50CM ABOVE LIQUID LEVEL

DETAILS OF SEPTIC TAN□ □ SECTION

PROJECT:- 2 X 660 MW NTPC SOLAPUR	
TITLE :- DETAILS OF SEPTIC TANK & SECTION	
DRG NO. :- BHE/PW/ST-SP-01	
OWNER :-	BHEL-PSWR NAGPUR

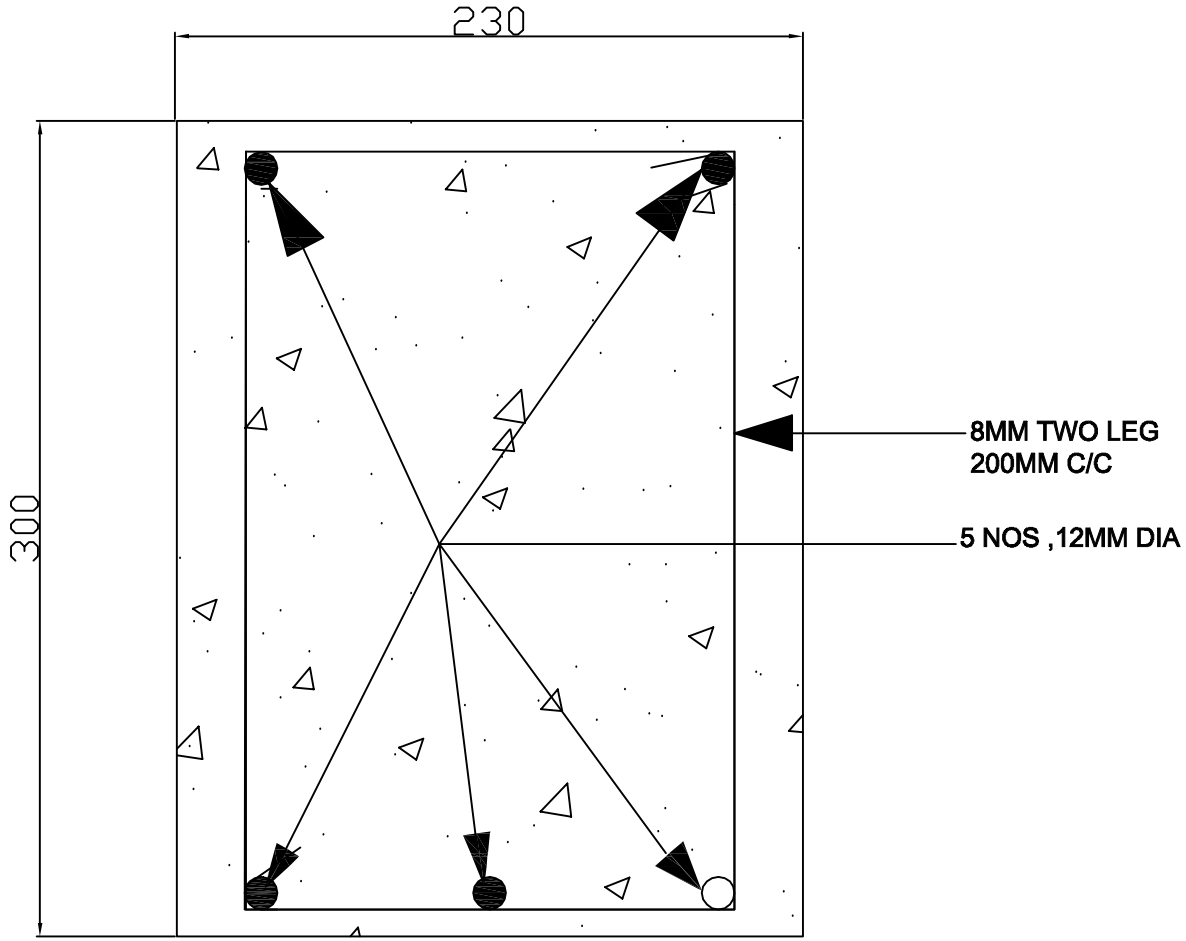

SECTION OF BAFFLE BEAM (230MM X 300MM)

ALL DIMENSIONS ARE IN 'MM'.

	PROJECT:- 2 X 660 MW NTPC SOLAPUR
	TITLE :- SECTION OF BAFFLE BEAM (230MMX300MM)
	DRG NO. :- BHE/PW/ST-SP-02
	OWNER :- BHEL-PSWR NAGPUR

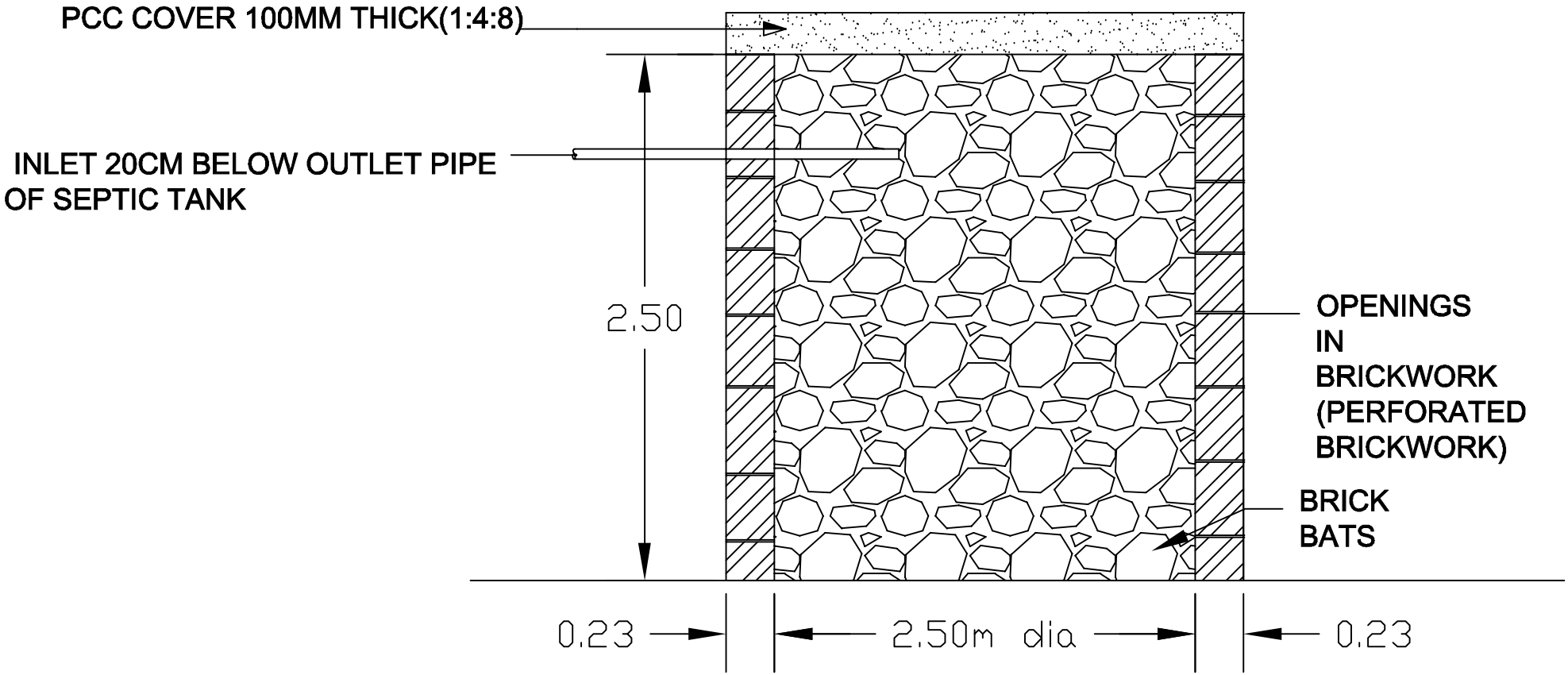

DETAILS OF SOAK PIT

PROJECT	:- 2 X 660 MW NTPC SOLAPUR
TITLE	:- DETAILS OF SOAK PIT
DRG NO.	:- BHE/PW/ST-SP-03
OWNER	:- BHEL-PSWR NAGPUR

BARBED WIRE FENCING

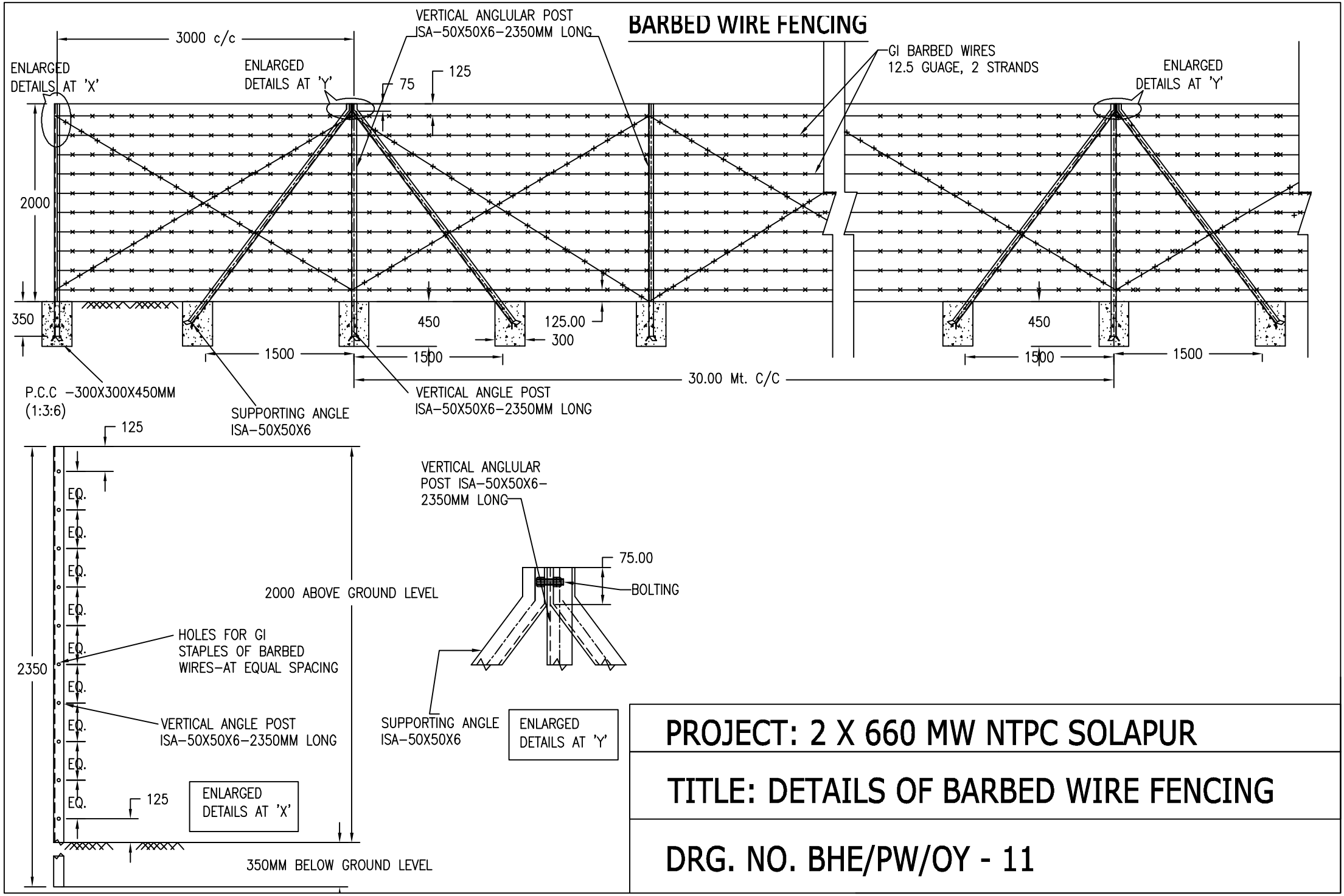

PROJECT: 2 X 660 MW NTPC SOLAPUR	
TITLE: DETAILS OF BARBED WIRE FENCING	
DRG. NO. BHE/PW/OY - 11	

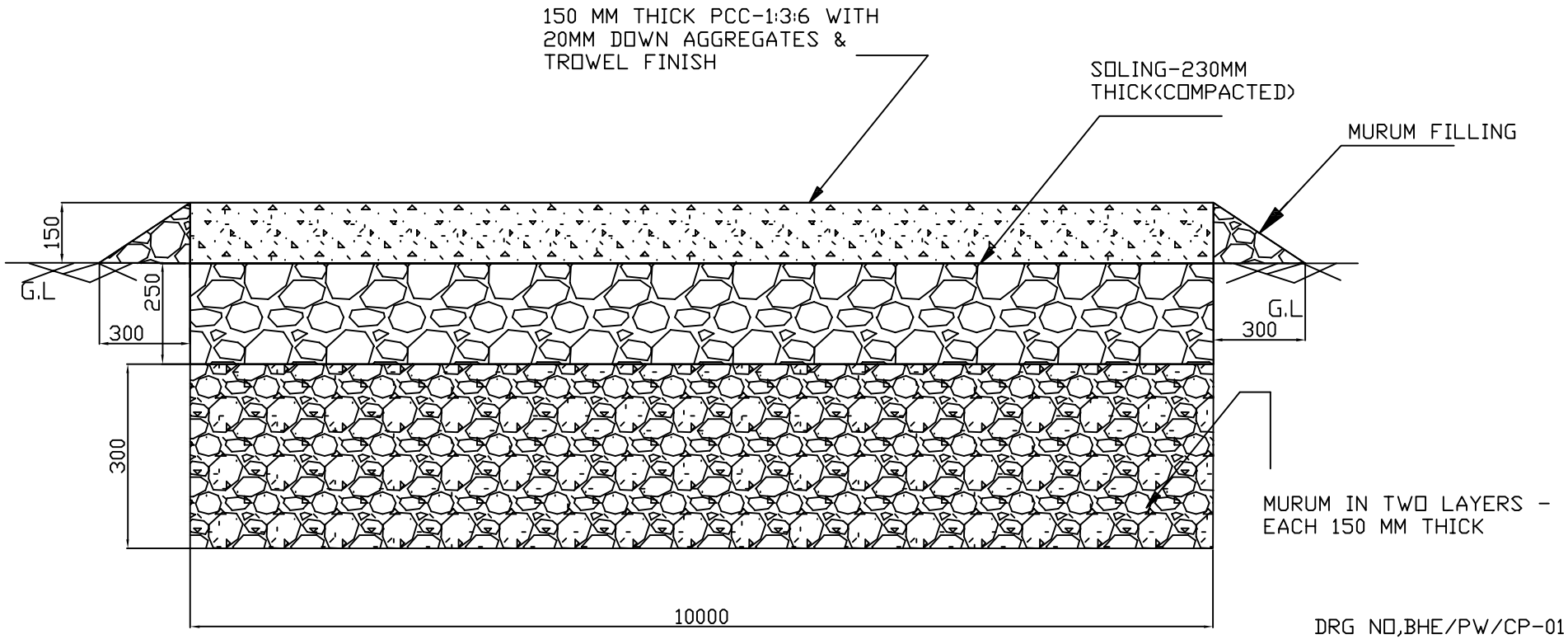

* ALL DIMENSION ARE IN 'MM'.
* DRAWING is NOT IN SCALE.

RAISED CONCRETE PLATEFORM (45 M X 10 M)

NOTE:
1)MILD CAMBER SHALL BE PROVIDED TO DRAIN THE WATER
2)IN CASE SOFT/HARD ROCK MAT WITH SUBGRADE/BELOW SOLING LEVEL IS FOUND THAN 150MM THICH MURUM SHALL BE LAID INPLACE OF 300 MM THICK MURUM FILLING.

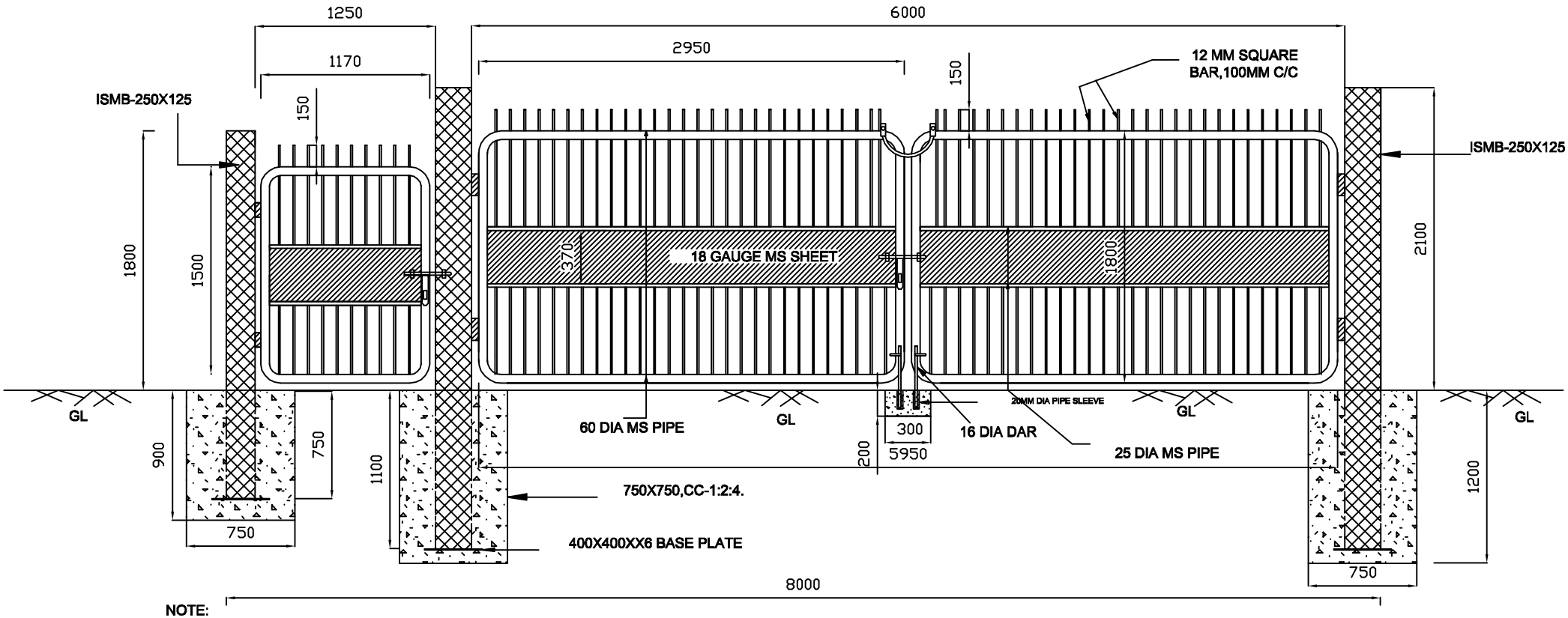

NOTE:
1)ALL DIMENSIONS ARE IN 'MM'.
2)CONCRETE FOR POST FOUNDATION-CC-1:2:4.
3)PANEL:2950 X 1800.
4)GAP BETWEEN EARTH TO PANAL - 100MM.
5)TOTAL WEIGHT OF GATE - 750 KG (APPROX)

PROPOSED MS PIPE GATE

PROJECT:- 2 X 660 MW NTPC SOLAPUR

TITLE :- PROPOSED MS PIPE GATE

DRG NO. :- BHE/PW/GATE

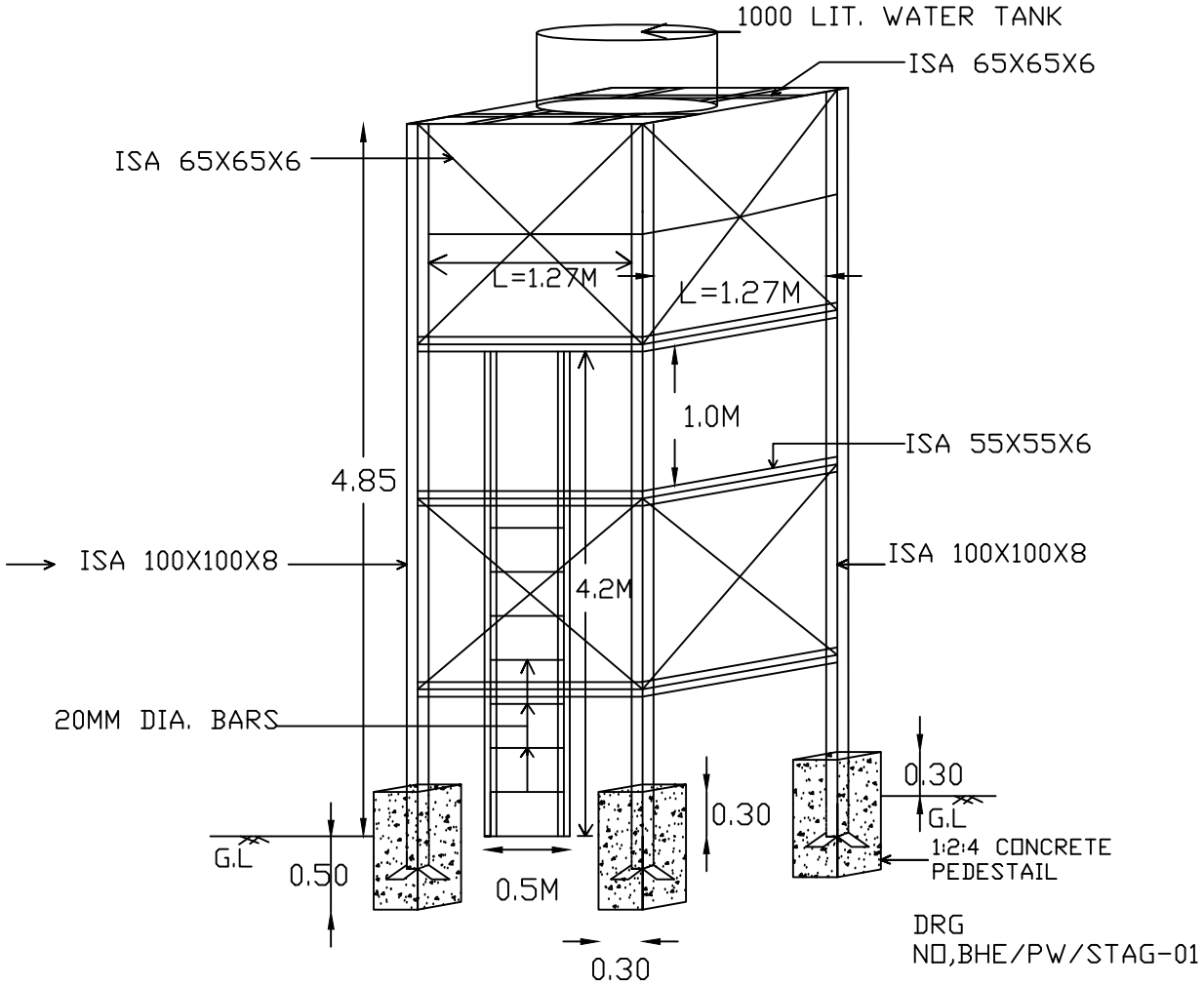

DRG
NO,BHE/PW/STAG-01

STAGING OF OVER HEAD WATER TANK

NOTE:
*CONCRETE 1:2:4 SHALL BE PAID UNDER RELAVENT ITEM IN BOQ