2X660 MW ENNORE SEZ STPP, CHENNAI.

PLEASE DOWNLOAD COMPLETE TECHICAL SPECIFICATION AT https://pem.bhel.com/Current_Tender.aspx AND https://www.bhel.com/tenders

VOLUME: IIB & III.

TECHNICAL SPECIFICATIONS
FOR
EFFLUENT TREATMENT PLANT.

SPECIFICATION NO.: PE-TS-412-158-A002

BHARAT HEAVY ELECTRICALS LIMITED
POWER SECTOR
PROJECT ENGINEERING MANAGEMENT
NEW BUILDING, NOIDA, INDIA.

CONTENTS

VOLUME-IIB & III

VOLUME-IIB

SECTION	DESCRIPTION	PAGE NO.
SECTION – A	SCOPE OF ENQUIRY	1
SECTION – B	PROJECT INFORMATION	3
SECTION – C	SPECIFIC TECHNICAL REQUIREMENTS	5
SECTION – C1	• SPECIFIC TECHNICAL REQUIREMENTS FOR MECHANICAL	6
TABLE-A	• SEA WATER ANALYSIS, IN FLUENT WATER AND GUARANTEED WATER QUALITY	12
TABLE-B	• MANDATORY SPARES	14
TABLE-C	• BREAK UP (%) OF SUPPLY PRICE IN BBU	16
	• DATA SHEET-A	17
SECTION – C2	• SPECIFIC TECHNICAL REQUIREMENTS FOR ELECTRICAL	23
	• ELECTRICAL EQUIPMENT SPECIFICATION	24
	• ELECTRICAL LOAD FORMAT	27
	• ELECTRICAL SCOPE BETWEEN BHEL AND VENDOR	29
SECTION – C3	• SPECIFIC TECHNICAL REQUIREMENTS FOR C&I	32
SECTION – D	GENERAL TECHNICAL REQUIREMENT	34
SECTION – D1	GENERAL TECHNICAL REQUIREMENT FOR MECHANICAL	35
SECTION – D2	GENERAL TECHNICAL REQUIREMENT FOR ELECTRICAL	39
	STANDARD SPECIFICATION FOR MOTORS	40
	BASIC TECHNICAL FEATURES OF MOTORS	46
	MOTOR DATA SHEET-A	54
	MOTOR DATA SHEET-C	56
	QUALITY PLAN FOR AC MOTORS	59
	CABLE SCHEDULE FORMAT	71
SECTION – D3	GENERAL TECHNICAL REQUIREMENT FOR C&I	75
	DATA SHEET FOR MOTORIZED VALVE	76
	DATA SHEET FOR MEASURING INSTRUMENT	80
	HOOK UP DRAWING	105
	ERECTION HARDWARE	112
ANNEXURE-A	• DRAWING DOCUMENTS DISTRIBUTION SCHEDULE	130
ANNEXURE-B	• ALREADY APPROVED DOCUMENTS (SUBMITTED BY M/S CWL)	132
ANNEXURE-C	• PAINTING PROCEDURE	461

VOLUME-III

	• LIST OF SCHEDULE	477
	• SCHEDULE OF PRE-BID CLARIFICATION	478
	• COMPLIANCE CERTIFICATE	479
	• SCHEDULE OF DECLARATIONS	480

SECTION – A

SCOPE OF ENQUIRY

1. SCOPE OF INQUIRY/ INTENT OF SPECIFICATION

1.1 The specification is intended to cover design, engineering, manufacture, supply, fabrication, assembly, inspection/testing at vendor's & sub-vendor's works, painting, maintenance/special tools & tackles, mandatory spares along with spares for erection as required, startup and commissioning spares as required, forwarding, proper packing, shipment and delivery at site, **Supervision of erection and commissioning including assembly at Site**, preparation and submission of drawing/documents including "As built" drawings and carrying out Trial Run and Performance Guarantee test (PG Test) at site & equipment/system guarantee, etc., handover in flawless condition of the **EFFLUENT TREATMENT PLANT** for **2X660 MW ENNORE SEZ STPP, CHENNAI** to the end customer complete with all accessories for the total scope defined as per BHEL NIT and tender technical specification number as specified above, amendment & agreement till placement of order.

Bidders to please note that originally the plant was Designed and Engineered by M/s Clear Water Ltd (M/s CWL), New Delhi, however, the Supply and further Erection work was not completed. The Civil front has already prepared at site based on the Detailed Engineering Documents submitted by M/s CWL and approved by M/s BHEL/Customer/Consultant. Bidder to visit site for readiness of Civil Fronts in totality. The items to be supplied by Bidder should be able to integrate/hook with the existing Civil Work/Foundation. Bidder shall carryout rectification in existing civil work if any, before erection & commissioning of the plant.

1.2 While all efforts have been made to make the specification requirement complete & unambiguous, it shall be bidders' responsibility to ask for missing information, ensure completeness of specification, to bring out any contradictory / conflicting requirement in different sections of the specification and within a section itself to the notice of BHEL and to seek any clarification on specification requirement in the format enclosed under Vol-III of the specification as **"PRE BID CLARIFICATION SCHEDULE"**. In absence of any such clarifications, in case of any contradictory requirement, the more stringent requirement as per interpretation of BHEL/Customer shall prevail and shall be complied by the bidder without any commercial implication on account of the same. Further in case of any missing information in the specification not brought out by the prospective bidders as part of pre-bid clarification, the same shall be furnished by BHEL/ Customer as and when brought to their notice either by the bidder or by BHEL/ customer themselves. However, such requirements shall be binding on the successful bidder without any commercial & delivery implication.

1.3 Deviations, if any, should be very clearly brought out clause by clause in the enclosed schedule; otherwise, it will be presumed that the vendor's offer is strictly in line with NIT specification.

1.4 Unless specified otherwise, all through the specification, the word contractor shall have same meaning as successful bidder/vendor and Customer/Purchaser/Employer will mean BHEL and/or Customer (**TAMILNADU GENERATION AND DISTRIBUTION CORPORATION (TANGEDCO))** including their consultant **(CONSULTANT: DESEIN PVT LTD, NEW DELHI**) as interpreted by BHEL in the relevant context. Bidder to refer GCC/SCC for more clarity.

SECTION - B

(PROJECT INFORMATION)

Project Title : 2 x 660 MW Ennore SEZ Coal Based Supercritical Thermal Power Project at Ash Dyke of NCTPS.

OWNER : TAMIL NADU GENERATION AND DISTRIBUTION CORPORATION (TANGEDCO).

LOCATION : The site is located near Vayalur Village, Ennore
Latitude : 13°17' N to 13°18' N
Longitude : 80°18' E to 80°19' E
Distance from Chennai City : 35 km
Nearest Airport is at Chennai at a Distance of : 60 km

Meteorological Condition

Climate : Tropical ,very dry and hot summer, dry and cold winter and good rain-fall in monsoon accompanied with strong wind.

Climatological data	:	Ambient temp. (°C)
Annual Maximum Mean Temp	:	41.5(°C)
Annual Minimum Mean Temp	:	24(°C)
Design Ambient temperature	:	35(°C)
Relative Humidity	:	In Percentage
Maximum	:	100%
Minimum	:	36%
Design	:	75%
Annual Rainfall	:	In MM
Maximum	:	2540 mm
Average	:	1600 mm
Minimum	:	1175 mm

Seismic Zone III as per IS:1893-2002

SECTION – C

(SPECIFIC TECHNICAL REQUIREMENTS)

SECTION – C1

(SPECIFIC TECHNICAL REQUIREMENTS FOR MECHANICAL)

1.0 GENERAL:

1.1 EFFLEUNT TREATMENT PLANT (ET PLANT)

The intent of this specification is to cover design, engineering, manufacture, supply, fabrication, assembly, inspection / testing at vendor's & sub-vendor's works, painting, maintenance / special tools & tackles, mandatory spares along with spares for erection as required, start up and commissioning spares as required, forwarding, proper packing, shipment and delivery at site, **Supervision of erection and commissioning including assembly at Site,** preparation and submission of drawing /documents including "As Built" drawings and carrying out Trial Run and Performance Guarantee/Functional/Demonstration tests at site (As applicable) & equipment/system guarantee etc., handover in flawless condition to end customer complete with all accessories for the total scope defined as per BHEL NIT & tender technical specification no. **PE-TS-412-164-A002** for **2X660 MW ENNORE SEZ STPP Effluent Treatment Plant**. The scope of supply shall fully cover the requirement of the Design Criteria and Technical specification of this specification.

The bidder's scope shall also include any other services, etc. if called for in the succeeding sections of the specification.

2.0 BROAD SCOPE OF SUPPLY

Broad scope of supply (Mechanical) for this package is detailed below and as indicated in relevant portion of this specification. Please refer Electrical & C&I specifications also for respective scope and design guidelines for Electrical & C&I items.

i. Entire Effluent treatment plant as per P&ID (**PE-V0-412-164-A004: P & ID FOR EFFLUENT TREATMENT PLANT**), Data Sheet-A and technical specification requirements.
ii. Two (2) nos. (1W+1S) Transformer Yard Area Oily Waste Transfer Pumps of Unit 1 complete with all instrumentation, valves, piping, fittings, motor etc.
iii. Two (2) Nos. (1W+1S) (1W+1S) Transformer Yard Area Oily Waste Transfer Pumps of Unit 2 complete with all instrumentation, valves, piping, fittings, motor etc.
iv. Two (2) Nos. (1W+1S) Coal Mill Oily Waste Transfer Pumps (for oily waste from coal mill area-1) of Unit 1 complete with all instrumentation, valves, piping, fittings, motor etc.
v. Two (2) Nos. (1W+1S) Coal Mill Oily Waste Transfer Pumps (for oily waste from coal mill area-2) of Unit 1 complete with all instrumentation, valves, piping, fittings, motor etc.
vi. Two (2) Nos. (1W+1S) Coal Mill Oily Waste Transfer Pumps (for oily waste from coal mill area-1) of Unit 2 complete with all instrumentation, valves, piping, fittings, motor etc.
vii. Two (2) Nos. (1W+1S) Coal Mill Oily Waste Transfer Pumps (for oily waste from coal mill area-2) of Unit 2 complete with all instrumentation, valves, piping, fittings, motor etc.
viii. Two (2) Nos. (1W+1S) Pre-settling Overflow Pumps of Unit 1 complete with all instrumentation, valves, piping, fittings, motor etc.
ix. Two (2) Nos. (1W+1S) Pre-settling Overflow Pumps of Unit 2 complete with all instrumentation, valves, piping, fittings, motor etc.
x. Two (2) Nos. (1W+1S) Power House Area Service Waster Transfer Pumps of Unit 1 complete with all instrumentation, valves, piping, fittings, motor etc.
xi. Two (2) Nos. (1W+1S) Power House Area Service Waster Transfer Pumps of Unit 2 complete with all instrumentation, valves, piping, fittings, motor etc.
xii. One (1) no. Oil Water Separator (TPI) complete with all accessories etc.
xiii. Two (2) nos. slop oil tanks & one (1) no. travelling trolley for TPI separator with accessories.
xiv. One (1) nos. TUBE SETTLER along with inlet chamber, flocculator, fittings, media, plate packs, and all accessories.
xv. Two (2) Nos. (1W+1S) Sludge Transfer Pumps complete with all instrumentation, valves, piping, fittings, motor etc.
xvi. Two (2) (1W + 1S) Air Blowers with piping, valves, instrumentation etc. for Sludge Pit with its internals (i.e.) casing, impeller, shaft etc. Blower speed shall be limited to 1500 rpm. Noise level of blowers should be limited to 85 dBA at 1 m from blowers. Air blower shown in the P&IDs &referred in the technical specification shall be provided in the acoustic enclosures.
xvii. Two (2) nos. Guard Pond Effluent Transfer Pumps complete with all instrumentation, valves, piping, fittings, motor etc.
xviii. Two (2) nos. Central Monitoring Basin Effluent Transfer Pumps complete with all instrumentation, valves, piping, fittings, motor etc.
xix. Two (2) nos. Gardening Pumps complete with all instrumentation, valves, piping, fittings, motor etc.
xx. One (1) no. Alum Dosing Tank for Tube Settler including slow speed gear operated agitator driven by motor complete with overflow seal, integral pipe works, valves, instrumentation and all other accessories required.
xxi. Two (2) (1W+1S) of Alum Dosing pumps with all accessories such as Y-type suction strainers, pressure dampeners, safety relief valves etc.
xxii. One (1) no. PE Dosing Tank for Tube Settler including slow speed gear operated agitator driven by motor complete with overflow seal, integral pipe works, valves, instrumentation and all other accessories required.
xxiii. Two (2) (1W+1S) of PE Dosing pumps with all accessories such as Y-type suction strainers, pressure dampeners, safety relief valves etc.

xxiv. One (1) no. Lime Dosing Tank for Tube Settler including slow speed gear operated agitator driven by motor complete with overflow seal, integral pipe works, valves, instrumentation and all other accessories required.

xxv. Two (2) (1W+1S) of Lime Dosing pumps with all accessories such as Y-type suction strainers, pressure dampeners, safety relief valves etc.

xxvi. One (1) no. Alkali Dosing Tank for Guard Pond & CMB including slow speed gear operated agitator driven by motor complete with overflow seal, integral pipe works, valves, instrumentation and all other accessories required.

xxvii. Two (2) (1W+1S) of Alkali Dosing Pumps for CMB with all accessories such as Y-type suction strainers, pressure dampeners, safety relief valves etc.

xxviii. Two (2) (1W+1S) of Alkali Dosing Pumps for Guard Pond with all accessories such as Y-type suction strainers, pressure dampeners, safety relief valves etc.

xxix. One (1) no. Acid Dosing Tank for Guard Pond & CMB complete with overflow seal, integral pipe works, valves, instrumentation and all other accessories required.

xxx. Two (2) (1W+1S) of Acid Dosing Pumps for CMB with all accessories such as Y-type suction strainers, pressure dampeners, safety relief valves etc.

xxxi. Two (2) (1W+1S) of Acid Dosing Pumps for Guard Pond with all accessories such as Y-type suction strainers, pressure dampeners, safety relief valves etc.

xxxii. Two (2) Nos Electrical Hoist each of 5 Ton with trailing cable and accessories.

xxxiii. Two (2) weighing scales of platform & dial type suitable for chemicals handling.

xxxiv. Pipe racks shall be provided by BHEL wherever available. However where pipe racks are not available the pipe shall run on pipe pedestals. All auxiliary steel structures (U-clamps, nuts, bolts, channels etc.) for fixing the pipe on the pedestal or trestles shall be in the scope of bidder.

xxxv. If buried piping is required, Wrapping, coating and protection of all the buried pipe is also in bidder's scope & shall be as per IS 10221.

xxxvi. All grout material in BHEL civil works and to support/ hold the equipment being supplied under this specification shall be in bidder's scope.

xxxvii. Any statutory clearance required for the system from MOEF or Local pollution control board in bidder's scope.

xxxviii. All motorized valves shall be provided with integral starter.

xxxix. Instrument hook up material shall be in bidder's scope.

xl. All necessary drains, vents and sampling points with valves as specified and as required are in bidder's scope.

xli. Monitoring gadgets, instruments and equipments required for maintenance (till PG test & plant handover) shall be in bidder's scope.

xlii. Wherever terminal points between BHEL and bidder indicated, bidder shall provide pipes with counter flange.

xliii. Entire piping inside ETP area are in Bidder's scope.

xliv. The following piping also are part of bidders's scope.

- Service water line (50 NB) will be provided by BHEL at 5 m distance from ETP area. Further distribution inside ETP area will be in bidder's scope. Bidder to note that pressure available at terminal point for service water will be 1 kg/ cm2 approx. (max.). for their pump lubrication/ cooling accordingly.
- Fuel oil area's treated water piping from fuel oil separator shall be terminated at 5 meter from ETP area. Further piping to TPI (in ETP area) shall be in bidder's scope.
- RO stage-II reject & CPU N-Pit waste to CMB, and RO stage-I reject & sludge from PT plant to Guard Pond shall be terminated at CMB and Guard Pond respectively by the BHEL's.
- respective agencies.Instrument Air/Service Air: At Terminal Point 10 meter from PT Plant Boundary at 5-7 kg/cm2 (g) pressure.
- Coal Mil Area#1 Unit#1 Oily Waste Sump (E2) to P/H Oily Waste Sump Unit#1 (E9): 160 m.
- Coal Mil Area#1 Unit#1 Oily Waste Sump (E3) to P/H Oily Waste Sump Unit#1 (E9): 270 m.
- Coal Mil Area#1 Unit#2 Oily Waste Sump (E5) to P/H Oily Waste Sump Unit#2 (E10): 160 m.
- Coal Mil Area#1 Unit#2 Oily Waste Sump (E6) to P/H Oily Waste Sump Unit#2(E10): 60 m.
- Oily Waste from Transformer Yard Area Unit#1 (E1) to P/H Oily Waste Sump Unit#1 (E9): 115 m.
- Oily Waste from Transformer Yard Area Unit#2 (E4) to P/H Oily Waste Sump Unit#2 (E10): 250 m.
- Pre-settling Pit Unit#1 (E7) to Tube Settler (AT ETP Area): 530 m.
- Pre-settling Pit Unit#2 (E8) to Tube Settler (AT ETP Area): 670 m.
- P/H Oily Waste Sump Unit#1 (E9) to ETP Area: 515 m.
- P/H Oily Waste Sump Unit#2 (E10) to ETP area: 725 m.
- CMB Effluent Transfer Pumps to CHP Dust Suppression System: 120 m.
- CMB Effluent Transfer Pumps to Guard Pond : 100 m.
- Tube Settler's Sludge Pit to Ash Slurry Sump: 800 m.
- Guard Pond Effluent Transfer Pump to CW blow down header: 120 m.
- Guard Pond Effluent Transfer Pump to Ash water sump: 120 m.
- Gardening pump to Terminal Point: 300 m.

xlv. All pipes, fittings etc. required for hand railing, platforms, and ladders shall be in the scope of bidder. All ladders shall be non-civil work. All nuts and bolts, puddle pipes, and counter flanges wherever applicable shall be in the scope of bidder. Supply of Hand railing as desired for safety purpose will be in bidder's scope.

xlvi. All the sumps, tanks, reservoirs and other water retaining structures shall be provided with access ladders/ rungs from operating platforms/ ground level as the case may be and dewatering pits one for each section (civil work by BHEL).

xlvii. Two sets of safety equipment comprising PVC protection suits with hoods, rubber boots, face visors and thick PVC gauntlets shall also be provided by the bidder. Two nos. personnel water drench safety shower and eye bath shall be provided by the bidder near acid alkali handling area.

xlviii. Instrumentation, valves etc. indicated in P&ID of Effluent Treatment Plant are bare minimum requirement, however bidder has to provide complete system for trouble free operation meeting technical specification & system requirement.

xlix. All blank flanges/ counter flanges, isolations valves, tees etc. to interconnect the pipes at all terminal points.

l. Mandatory spares as per list attached in this specification..

li. All special tools necessary for proper maintenance or adjustment of the equipment packaged in permanent box.

lii. Start-up and commissioning spares as required.

liii. Wherever terminal points between BHEL and bidder indicated, blank flanges/counter flanges, isolations valves, tees etc. to interconnect the pipes at all terminal points.

liv. Hume Pipe 10 Nos (350 NB Size) each of 6 meter length.

lv. All handrails shall be of 32 mm nominal bore MS pipes (medium class) as per IS: 1161 galvanized using 750 gm/sq. m of zinc. Hand railing shall be a two-rail system with the top rail 1000 mm above the walkway surface and the intermediate rail 450 mm below the top rail. Handrail post spacing shall be limited to 1500 mm as far as possible but can be proportioned to the length of the opening. In such a case spacing shall not exceed 1850 mm centre to centre of posts. Hand railing shall be shop fabricated for specific locations and field welded or bolted to the erected structural steel. Railings shall be provided with 100 mm wide and 8 mm thick MS strip at bottom as toe guard all along the length of railing in horizontal plane. For RCC stairs, hand railing with 20 mm square MS bar balustrade with suitable MS flat and Aluminium / Teakwood handrail shall be provided, unless specifically mentioned otherwise.

lvi. Finish paints for touch up painting of equipment after erection at site in sealed container. Bidder shall also provide one final coat additionally of same DFT as specified in tender specification at site after completion of erection of each equipment / item.

lvii. Monitoring gadgets, instruments and equipment required for commissioning & maintenance (till PG test and plant handover).

lviii. Wrapping, coating and protection of the entire buried pipe (for MS/CS/CI pipe) shall be as per IS 10221 or AWWA C 203-93.

lix. Bidder to note that the equipment, valves, instruments indicated in the P&ID (**PE-V0-412-164-A004**) attached in the technical specification are minimum and are in bidder's scope. During detailed engineering, bidder to furnish complete and detailed scheme in all respects including all valves, equipment's etc. for smooth, safe, efficient and trouble free operation of the plant meeting the specification requirement and also considering the applicable statutory requirement.

lx. All required auxiliary steel (U Clamp, Nut, Bolts, Auxiliary Channel, etc for taking pipe support from pedestal /pipe rack) required for pipe routing on BHEL supplied pipe rack/pedestal shall be part of bidder scope.

lxi. Permanent ladder (not rungs) for approaching the top of tanks, valves for All steel inserts with lugs, plates, bolts, nuts, sleeves, edge angles and all other embedding components etc as required to grout in civil works and to support/hold the equipment being supplied under this specification for opening/maintenance purpose.

lxii. All the first fill and one Year's topping requirements of consumable such as greases, oil, lubricants, servo fluids/control fluids etc. which will be required to put the equipment covered under the scope of specifications, into successful commissioning / initial operation and to establish completion of facilities shall be in bidder's scope. Suitable standard lubricants as available in India are desired. Efforts should be made to limit the variety of lubricants to minimum.

lxiii. All Chemical for Trial Run (Minimum 15 Days) and for PG Test+First fill of all chemical tanks.

Note: The mechanical Documents/Drawings already approved as per ANNEXURE-B to be followed by bidder and for that no drawing/documents to be submitted by Bidder. In addition to above the engineering documents which are not approved as per ANNEXURE-B shall be part of Bidder scope.

3.0 SCOPE OF SERVICE

The bidder's scope also includes following services for scope under this specification:

1) **Supervision of Erection and Commissioning at Site including assembly at site,** Bidder shall be required to depute his qualified/capable personnel at any stage for **Three (3)** visits each of **Fifty (50)** days to supervise in Erection and Commissioning including assembly in totality [Total **One Fifty (150)** days in **Three (3)** visits excluding the travel time]. Bidder to indicate the prices (in price format) for the same. The prices for Visit shall be inclusive of charges of Air-Fair/Rail-Fair, Boarding/Lodging, local conveyance, medical, Insurance etc.

- Bidder to ensure that the erection and commissioning work meets the technical specification requirement which are necessary to meet the performance guarantee of complete Effluent Treatment Plant.
- The scope of Bidder shall include to carry out trouble shooting during supervision of erection and commissioning and intimate any minor modification in erection drawings/sequence/ procedure to BHEL.

- The scope of Bidder shall include to carry out trouble shooting during trial test/ demonstration test/ functional performance guarantee test and to implement the same to meet the performance guarantee of complete Effluent Treatment Plant.
- Before erection, Bidder shall visit site for checking and ensuring Civil Front correctness and readiness for erection. In case of any discrepancy find out, Bidder shall intimate to BHEL and propose any minor modification in erection drawings/sequence/ procedure.

2) Arrangement of all instruments and lab facilities to carry out trial run/commissioning and PG test.
3) All personnel required during Trial Run and PG Test.
4) Trial Run and PG (Performance and Guarantee) testing.
5) Painting as per enclosed painting schedule. However, any variation in the painting schedule as finally approved by customer shall be taken care by the bidder without any commercial and delivery implication. Color-coding scheme shall be intimated to vendor during detailed engineering.

4.0 CIVIL SCOPE

Total Civil construction work along with material (RCC and Reinforcement Steel) at site is in BHEL's Scope of work, however complete grouting for equipment, pumps, blowers etc. fixing of equipment, pumps, blowers etc. as required shall be in bidder's scope.

Detailed Civil assignment drawing shall be provided by bidder.

Note: The Civil Input Documents/Drawings already approved as per ANNEXURE-B to be followed by bidder and for that no drawing/documents to be submitted by Bidder. In addition to above the engineering documents which are not approved as per ANNEXURE-B shall be part of Bidder scope.

5.0 ELECTRICAL SCOPE

Complete electrical as per specification / details indicated in Section IB (Specific Technical Requirement Electrical) and IIB (General Technical Requirement Electrical).

Note-1: The Electrical Documents/Drawings already approved as per ANNEXURE-B to be followed by bidder and for that no drawing/documents to be submitted by Bidder. In addition to above the engineering documents which are not approved as per ANNEXURE-B shall be part of Bidder scope.

Note-2: Please note that MCC/Switchgear already supplied by BHEL, bidder to follow the already approved load list (Ref. PE-V0-412-164-A001). In case any minor changes is needed, the same shall be part of bidder scope.

6.0 C&I SCOPE

Complete C&I as per specification / details indicated in Section IC (Specific Technical Requirement C&I) and IIC (General Technical Requirement C&I).

Note: The C&I Documents/Drawings already approved as per ANNEXURE-B to be followed by bidder and for that no drawing/documents to be submitted by Bidder. In addition to above the engineering documents which are not approved as per ANNEXURE-B shall be part of Bidder scope.

5.0 TERMINAL POINT AND PIPING [Ref. PE-V0-412-164-A032 (PIPING LAYOUT (INSIDE)), PE-V0-412-164-A002 (YARD PIPING LAYOUT FOR ETP)]"

- Service water line (50 NB) will be provided by BHEL at 5 m distance from ETP area. Further distribution inside ETP area will be in bidder's scope. Bidder to note that pressure available at terminal point for service water will be 1 kg/ cm2 approx. (max.). for their pump lubrication/ cooling accordingly.
- Fuel oil area's treated water piping from fuel oil separator shall be terminated at 5 meter from ETP area. Further piping to TPI (in ETP area) shall be in bidder's scope.
- RO stage-II reject & CPU N-Pit waste to CMB, and RO stage-I reject & sludge from PT plant to Guard Pond shall be terminated at CMB and Guard Pond respectively by the BHEL's.
- respective agencies.Instrument Air/Service Air: At Terminal Point 10 meter from PT Plant Boundary at 5-7 kg/cm2 (g) pressure.
- Coal Mil Area#1 Unit#1 Oily Waste Sump (E2) to P/H Oily Waste Sump Unit#1 (E9): 160 m.
- Coal Mil Area#1 Unit#1 Oily Waste Sump (E3) to P/H Oily Waste Sump Unit#1 (E9): 270 m.
- Coal Mil Area#1 Unit#2 Oily Waste Sump (E5) to P/H Oily Waste Sump Unit#2 (E10): 160 m.
- Coal Mil Area#1 Unit#2 Oily Waste Sump (E6) to P/H Oily Waste Sump Unit#2(E10): 60 m.
- Oily Waste from Transformer Yard Area Unit#1 (E1) to P/H Oily Waste Sump Unit#1 (E9): 115 m.
- Oily Waste from Transformer Yard Area Unit#2 (E4) to P/H Oily Waste Sump Unit#2 (E10): 250 m.

- Pre-settling Pit Unit#1 (E7) to Tube Settler (AT ETP Area): 530 m.
- Pre-settling Pit Unit#2 (E8) to Tube Settler (AT ETP Area): 670 m.
- P/H Oily Waste Sump Unit#1 (E9) to ETP Area: 515 m.
- P/H Oily Waste Sump Unit#2 (E10) to ETP area: 725 m.
- CMB Effluent Transfer Pumps to CHP Dust Suppression System: 120 m.
- CMB Effluent Transfer Pumps to Guard Pond : 100 m.
- Tube Settler's Sludge Pit to Ash Slurry Sump: 800 m.
- Guard Pond Effluent Transfer Pump to CW blow down header: 120 m.
- Guard Pond Effluent Transfer Pump to Ash water sump: 120 m.
- Gardening pump to Terminal Point: 300 m.

Note: The Pump head shall be as per PE-V0-412-164-A008 (PROCESS SIZING CALCULATION).

6.0 EXCLUSIONS

a) Service air, Instrument air, upto the terminal point.
b) Fire fighting facilities. However, bidder to furnish the requirement of same after award of contract.
c) Drinking water and service water.
d) All Civil works at site including Acid/Alkali resistant tiling/lining, excavation, backfilling, cement and steel.
e) Laying of pipes under road crossing and railway track.
f) M.C.C. / Switch fuse feeder panels for the power plant and control cabling up to & beyond the battery limit (Refer electrical section for scope).
g) DCS/DDCMIS.
h) Erection and Commissioning including assembly at site.
i) Painting at Site.

7.0 QP AND SUBVENDOR APPROVAL

a) QP requirements part of section-C shall be as per the enclosed QP subject to BHEL/Customer approval. However, any additional comments as given by BHEL/Customer shall be adhered by the bidder without any implication to BHEL.
b) Approved subvendor list is enclosed elsewhere of this specification. However, any additional sub-vendor shall be subject to BHEL and Customer approval.

Note: The QAP already approved as per ANNEXURE-B to be followed by bidder and for that no documents to be submitted by Bidder. In addition to above the engineering documents which are not approved as per ANNEXURE-B shall be part of Bidder scope.

8.0 FUNCTIONAL GUARANTEES (REFER APPROVED PG TEST PROCEDURE ENCLOSED, REF. PE-V0-412-164-A024).

9.0 DESIGN/CONSTRUCTION

In addition to the requirements of Section-C & D the following shall also be complied under scope of this specification:
The P&ID is enclosed herein in this section for bidders compliance.
The material of construction specified in Data Sheet-A are minimum requirements and material of construction for other components not specified shall be similarly selected by the bidder for intended duty which shall be subjects to customer approval during detailed engineering.

10.0 DRAWING/DOCUEMNTS REQUIREMENT (FOR MECHANICAL/ELECTRICAL/C&I/ETC)

The Documents/Drawings already approved as per ANNEXURE-B to be followed by bidder and for that no drawing/documents to be submitted by Bidder. In addition to above the engineering documents which are not approved as per ANNEXURE-B shall be part of Bidder scope.

11.0 DRAWING/DOCUEMNTS REQUIRED ALONG WITH THE BID (Please refer Electrical and C&I portion also).

- Compliance certificate.(Stamped & Signed)
- Un Price Schedule duly filled in. (Stamped & Signed)

NOTE-1: - Any item/work either supply of equipment or erection material which have not been specifically mentioned in but are necessary to complete the woks for trouble free and efficient operation of the plant shall be deemed to be included within the scope of this specification. The bidder without any extra charge shall provide the same.

Note-2: Bidder to note that BHEL reserve the right for drg/doc submission through web based Document Management System. Bidder would be provided access to the DMS for drg/doc approval and adequate training for the same. Detailed methodology would be finalized during the kick-off meeting. Bidder to ensure following at their end.

• Internet explorer version – Minimum Internet Explorer 7
• Internet speed – 2 mbps (Minimum preferred)
• Pop ups from our external DMS IP (124.124.36.198) should not be blocked
• Vendor's Internal proxy setting should not block DMS application's link
(http://124.124.36.198/wrenchwebaccess/login.aspx)

Note-3: The above Note-1 and 2 shall be applicable for Electrical and C&I also.

TABLE - A

SEA WATER ANALYSIS, IN FLUENT WATER AND GUARANTEED WATER QUALITY:

A) SEA WATER ANALYSIS			
S.No.	**Parameter**	**Unit**	**Value (Range)**
1	**General**		
a	pH		7.94-8
b	Conductivity	millisiemens/cm	43.8-44.1
c	Temperature	Deg C	25-32
d	Turbidity (Total Suspended Solids)	PPM	500
e	Total Organic carbon (total/ dissolved)	PPM of C	2.4-2.84
f	CO2	Mg/l	<2
g	TDS	Mg/l	39600-39740
h	BOD	Mg/l	10-12
i	COD	Mg/l	88-96
j	Oil & Grease	Mg/l	<10
k	Phenols	Mg/l	0.08-0.09
l	Free Residual Chlorine	Mg/l	<0.2
2	**Cations**		
a	Cacium	Mg/l	459-478
b	Magnesium	Mg/l	1510-1516
c	Sodium	Mg/l	10100-12000
d	Potassium	Mg/l	358-450
e	Ammonia	Mg/l	4.43-5.42
f	Stontium	Mg/l	12.9-12.4
g	Barium	Mg/l	1.55-1.58

h	Aluminum Total	Mg/l	1-1.8
i	Aluminum Dossolved	Mg/l	0.8-1.0
j	Manganese Total	Micro g/l	0.2-0.6
k	Manganese Dissolved	Micro g/l	0.1-0.2
l	Iron total	Micro g/l	220-260
m	Iron Dissolved	Micro g/l	Below detectable limit (detectable Limit : 10)
3	**Anions**		
a	Chloride	Mg/l	18994-19194
b	Sulphate	Mg/l	3710-3949
c	Nitrate	Mg/l	136-152
d	Nitrite	Mg/l	0.46-0.62
e	Bicarbonate	Mg/l	144-148
f	Carbonate	Mg/l	Nil
g	Fluoride	Mg/l	2.64-2.8
h	Boron	Mg/l	0.14-0.17
i	Phosphate	Micro g/l	240-380
j	Sulphide	Micro g/l	Below detectable limit (detectable Limit : 100)
k	Silica Dissolved	Micro g/l as SiO2	200-250
4	**Heavy Metals**		
A	Arsenic	Micro g/l	Below detectable limit (detectable Limit : 2)
B	Mercury	Micro g/l	Below detectable limit (detectable Limit : 1)
C	Cadmium	Micro g/l	120-130
D	Copper	Micro g/l	200-220
E	Nickel	Micro g/l	470-490
F	Molybdenum	Micro g/l	Below detectable limit (detectable Limit : 100)
5	**Suspended Particle Size Range**		
A	10 micron & above	Mg/l	Below detectable limit(detectable Limit : 10)
B	5 micron to 10 micron	Mg/l	Below detectable limit(detectable Limit : 10)
C	1 micron to 5 micron	Mg/l	Below detectable limit(detectable Limit : 10)
D	0.1 micron to 1 micron	Mg/l	20-26
6	**Colloidal Particle Size Range**		
A	SDI (10 Minutes)	-	10-20
B	SDI (5 Minutes)	-	20-40
7	Density of sea water	Kg/ cum	1030

B) INFLUENT QUALITY:

a) FREE OIL & FLOATING OIL IN TUBE SETTLER: 500 PPM
b) TSS IN TUBE SETTLER: 500 PPM
c) TSS FROM CPU N-PIT WASTE : 200 PPM
d) TDS FROM CPU N-PIT WASTE : 1400 TO 6000 PPM
e) TDS IN RO STAGE-I REJECT: 61000 PPM
f) TDS IN RO STAGE-II REJECT: 3000 PPM
g) TSS IN RO REJECT-I & II SHALL NOT BE MORE THAN 20 PPM.
h) TSS IN SLUDGE FROM PT PLANT: 20000 PPM
i) CLARIFIED WATER (TSS: 15 PPM) WILL BE USED FOR WASHING/ FLUSHING, CHEMICAL

SOLUTION PREPRATION.
C) OUTLET GUARANTEE PARAMETERS: a) OIL QUANTITY AT TUBE SETTLER OUTLET: 10 ppm MAX. b) TSS AT LAMELLA CLARIFIER / TUBE SETTLER OUTLET: 10 ppm MAX. c) FOLLOWING EFFLUENT QUALITY (FROM GUARD POND) SHALL BE GUARANTEED:- TSS < 100 ppm Oil & Grease < 10 ppm pH 6.5- 8.5 d) FOLLOWING EFFLUENT QUALITY (FROM CMB) SHALL BE GUARANTEED:- pH 6.5- 8.5

MANDATORY SPARES

TABLE-B

S. NO.	ITEM	QUANTITY	UNIT
A) C&I Mandatory Spares			
1.	Each type of lamps, PBs, ILPBs, fuse, MCB, MCCB used in the equipment/ system.	20% of installed of each type.	Nos.
2.	**Indicators, Recorders, Electrical Metering and Skid Mounted Instruments**		
a.	Temperature, Transmitters and Electronic Transmitters (For Pressure, Temp., DP, Flow, Level), Temperature, Pressure, Flow & Level Switch, Safety switches, Gauges, Meters, Transducers, or any other instrument etc. meters, any other instrument etc.	10% of total number of Instruments/ transducers offered for each model and type for the project or a minimum of one number, whichever is more.	Nos.
b.	Indicators, recorders and meters offered from each model for the project. These instruments shall be supplied with three sets of blank scales.	10 % of Installed of each type/ model or a minimum of one number for each model and type, whichever is more.	Nos.
c.	For skid mounted in instruments	10% of total number of instruments for each Type and model or a minimum of one number for each model and type, whichever is more.	Nos.
3.	**Temperature Elements and Thermowells**		
a.	Thermocouple/ RTD elements	10% spare for each type and length of element furnished with thermocouple/ RTD assemblies, or a minimum of one number of each type & length, whichever is more.	Nos.
b.	Thermowells	10% for each type of temperature sensors or minimum one for each type, whichever is more.	Nos.
4.	Hooters, Buzzers, Cooling fans of each type.	Ten (10) percent or 2 no. whichever is more.	Nos.
5.	Interface cables.	2 sets of each type/ model.	Set
6.	Power supply modules (AC to DC converters).	10% or Five no. (Whichever is more) of each type/ model.	Nos.
7.	**Relay Based Control Panels**		
a.	LEDs for indicating lights.	10% of quantity installed.	Nos.
b.	Control circuit fuses/ MCB/M CCB/ Semiconductor Fuses.	300% of installed of each type, current rating.	Nos.
c.	Relays modules & contactors.	20% spare of quantity Installed of each type & rating.	Nos.
8.	**Alarm Annunciation System**		

a.	Logic modules, group card modules, power supply modules, Hooters and any other electronic module.	20% spares of each type installed.	Nos.
b.	Un-engraved window boxes complete with LED etc.	5% spares of each size installed.	Nos.
c.	LEDs for annunciation facia windows and LEDs box assemblies offered for the project.	20% of quantity installed	Nos.
d.	Annunciator hooter.	One (1) No. of each type	Nos.
9.	**Erection hardware**		
a.	Instrument valves.	Ten (10) percent of each type & Size installed.	Nos.
b.	Condensate pots of each type & Size installed.	Ten (10) percent of total number of Installed or four numbers whichever is higher.	Nos.
c.	Manifold.	Ten (10) percent of each type & Size installed.	Nos.
d.	Fittings.	Ten (10) percent of each type & Size installed.	Nos.
10.	**Mandatory Spares for Control valves, Power Cylinder, Control Dampers, Actuators and Accessories.**		
A.	Following spares shall be furnished for control valves, Power Cylinder, Control Dampers as applicable:-.		
a.	One set of spare control valve stem packing for each control valve.		Set
b.	Two moulded rubber diaphragms for each control valve.		Nos.
c.	One sets of each of O-rings and rubber gaskets for each control valve.		Set
d.	100 percent qty. of lubricants for gaskets for each control valve on one year consumption basis.		Nos.
e.	2 sets of limit switches and 1 set of valve positioner for each control valve.		Set
f.	20 percent of position transmitter (4-20mA) for total qty. of control valve.		Nos.
g.	One (1) set of valve trims (such as plug, stem, seat ring /cage, guide bushing, stem lock pin, packing retaining ring, etc.) for each control valve.		Set.
h.	One complete actuator of each type or min 10% for each type and size whichever is more		Nos.
i.	20 percent of Solenoid valves or min 2 no. of each type for total qty. of control valves.		Nos.
j.	20% of I to P converters, Pressure regulators		Nos.
11.	**C&I Mandatory spares which are not covered above.**	10% or 1 no. (whichever is more) of each type of sensor/instrument, analyzers/ special instruments/ Electronic card, instrumentation/ mechanical fittings etc.	Nos.
B) <u>Electrical Mandatory Spares</u>			
1.0	**415 V Motors (Mandatory Spares)**		
a.	Terminal plates	10 Nos. each for small motors up to 30 kW & 4 Nos. each for more than 30 Kw.	Nos.
b.	Heaters	2 sets.	Set
c.	Greasing arrangements	4 sets each type of motor	Set
d.	Motor of each type and rating	10% of the installed quantity or minimum 1 number whichever be higher.	Nos.
e.	Bearings (DE and NDE) for each type and rating of motor	4 sets.	Set

<u>Notes:</u>

1) Mandatory spares listed above is bare minimum requirement. In case any additional mandatory spares requirement is covered elsewhere in the tender specification apart from specified above, same shall be deemed to have been covered in bidders scope of supply.

2) Unless stated otherwise, a "set" or "Lot" means items required for complete replacement in one equipment

of each type/ size/ range.
3) In case of Bought Out items, itemised spares list may be vendor specific and may differ from the list of spares mentioned above. In such cases, the quoted price shall be considered for applicable items only without any change in the contract price.
4) In case spares indicated in the list are not applicable to the particular design offered by the bidder, the bidder should offer spares applicable to offered design with quantities generally in line with the approach followed in the above list.

PERCENTAGE OF BILLING BREAK UP (BBU)

TABLE-C

1.0	**THE BREAK UP (%) OF SUPPLY PRICES OF ETP PACKAGE IN THE BBU SHALL BE IN LINE WITH THE BELOW PROVIDED DETAILS:**	
1.1	Lump sum firm price for supply of Atmospheric tanks and pressure vessels along with accessories (as applicable) inclusive of all taxes, duties and other levies as applicable.	6% of total supply price.
1.2	Lump sum firm price for supply of Valves inclusive of all taxes, duties and other levies as applicable.	20% of total supply price.
1.3	Lump sum firm price for supply of Instruments & analysers inclusive of all taxes, duties and other levies as applicable.	12% of total supply price.
1.4	Lump sum firm price for supply of Pumps & Blowers with motor inclusive of all taxes, duties and other levies as applicable.	22% of total supply price.
1.5	Lump sum firm price for supply of Piping & Fittings inclusive of all taxes, duties and other levies as applicable.	20% of total supply price.
1.6	Lump sum firm price for supply of tube settler plates & media, agitators, strainers along with accessories inclusive of all taxes, duties and other levies as applicable.	11% of total supply price.
1.7	Lump sum firm price for supply of Balance Miscellaneous items inclusive of all taxes, duties and other levies as applicable.	9% of total supply price.

Bidder to submit BBU during detailed engineering after approval of Basic documents. BBU shall be equal to BOQ for the package and there shall be no price and delivery implication is applicable to BHEL / customer for the same. None of the items supplied for the project as non-billable. Incomplete BBU shall not be review by BHEL.

DATA SHEET-A

1.0	**POWER HOUSE OILY WATER SUMP AND TRANSFER PUMPS**	
	Power House Oily Water Sump	One (1) number per unit
1.2	Capacity	**10** m^3
1.3	Material	RCC
1.4	Power House Oily Water Transfer Pumps	2 nos. (1W + 1S) per unit
1.5	Pumps Capacity	**15** m^3/hr. **(each pump)**
1.6	Head of the Pump	As per PE-V0-412-164-A008 (PROCESS SIZING CALCULATION)
1.7	Pump type	Screw
1.8	MOCs	Casing: 2 % NiCi as per IS 210 FG 260; Rotor & Shaft: CF 8M, Stator: Nitrile Black.
2.0	**RETENTION PIT FOR OILY WASTE AND PUMPS IN TRANSFORMER AREA**	
2.1	Power House Oily Water Sump	One (1) number per unit
2.2	Capacity	85 m^3
2.3	Material	RCC
2.4	Power House Oily Water Transfer Pumps	2 nos. (1W + 1S) per unit
2.5	Pumps Capacity	**10** m^3/hr. **(each pump)**
2.6	Head of the Pump	As per PE-V0-412-164-A008 (PROCESS SIZING CALCULATION)
2.7	Pump type	Screw
2.8	MOCs	Casing: 2 % NiCi as per IS 210 FG 260; Rotor & Shaft: CF 8M, Stator: Nitrile Black.
3.0	**COAL MILL OILY WASTE SUMP AND PUMPS IN COAL MILL AREA**	
3.1	Power House Oily Water Sump	Two (2) numbers per unit
3.2	Capacity	5 m^3
3.3	Material	RCC
3.4	Power House Oily Water Transfer Pumps	2 nos. (1W + 1S) per sump
3.5	Pumps Capacity	**5** m^3/hr. **(each pump)**
3.6	Head of the Pump	As per PE-V0-412-164-A008 (PROCESS SIZING CALCULATION)
3.7	Pump type	Screw
3.8	MOCs	Casing: 2 % NiCi as per IS 210 FG 260; Rotor & Shaft: CF 8M, Stator: Nitrile Black.
4.0	**COMMON COLLECTION SUMP AND TRANSFER PUMPS**	
4.1	TPI Overflow Sump	One (1) number
4.2	Capacity	**20** m^3
4.3	Material	RCC
4.4	TPI Overflow Transfer Pumps	2 nos. (1W +1S)
4.5	Pumps Capacity	**40** m^3/hr.
4.6	Head of the Pump	As per PE-V0-412-164-A008 (PROCESS SIZING CALCULATION)
4.7	Pump type	Screw
4.8	MOCs	Casing: 2 % NiCi as per IS 210 FG 260; Rotor & Shaft: CF 8M, Stator: Nitrile Black.
5.0	**PRESETTLING PIT**	
5.1	Numbers	One (1) no. per unit
5.2	Capacity	10 m^3
5.3	MOC	RCC
6.0	**PRESETTLING PIT OVERFLOW SUMP AND TRANSFER PUMPS**	
6.1	Numbers	One
6.2	Capacity	5 m^3
6.3	MOC	RCC
6.4	PSP Overflow Transfer Pumps	2 nos. (1W + 1S) per pit
6.5	Pumps Capacity	15 m^3/hr.
6.6	Head of the Pump	As per PE-V0-412-164-A008 (PROCESS SIZING CALCULATION)
6.7	Pump type	Vertical type
6.8	MOCs	Casing: 2 % NiCi; Column Pipe, Base Plate/ Cover Plate: MS-IS 2062; Impeller: CF8M; Pump/ Impeller Shaft, Shaft coupling, & Shaft

		Sleeve: SS 410; Fasteners: SS 304; Shaft Bearing: BUSH GM as per IS 306; Gland: CI IS 210 FG 260.
7.0	**TPI SEPARATOR**	
7.1	Quantity	One (1)
7.2	Design Capacity	**40** m^3/hr.
7.3	MOC	MS with Epoxy paint.
7.4	No. of Slope Oil Tank	2 Nos of MSEP MOC.
7.5	Plate Pack	PVC
7.6	Oil Skimmer	Epoxy painted.
8.0	**GUARD POND**	
8.1	Nos.	One (1) no.
8.2	No. of Compartments	2
8.3	Type	Partially underground/ Partially above ground
8.4	MOC	RCC
8.5	Effective Capacity	5000 m^3 (total capacity)
9.0	**GUARD POND PUMPS**	
9.1	Quantity / Nos.	Two (2) (1W+1S)
9.2	Type of Pumps	Vertical Turbine
9.3	Capacity of each Pump	1200 m^3/hr.
9.4	Head	As per PE-V0-412-164-A008 (PROCESS SIZING CALCULATION)
9.5	MOCs	Casing, Column Pipe, Impeller, Shaft, Line Shaft Coupling, Line Shaft Bearing, Wearing Ring, Shaft Sleeve: Duplex SS 2205 UNS 31803; All hardware under Water: AISI SS 316; Thrust Pad: Carbon steel with white metal lining; Gland Packing: SS 316; Stuffing Box Housing: SS 316or 13.5 to 17.5 % Ni Ci; Discharge Pipe and Flanges: Fabricated steel as per IS: 2062 with epoxy painting outside and glass coating or cement mortar coating inside.
10.0	**HORTICULTURE WATER TRANSFER PUMPS**	
10.1	Quantity / Nos.	Two (2) (1W+1S)
10.2	Type of Pumps	Vertical Turbine
10.3	Capacity of each Pump	20 m^3/hr.
10.4	Head	As per PE-V0-412-164-A008 (PROCESS SIZING CALCULATION)
10.5	MOCs	Casing, Column Pipe, Impeller, Shaft, Line Shaft Coupling, Line Shaft Bearing, Wearing Ring, Shaft Sleeve: Duplex SS 2205 UNS 31803; All hardware under Water: AISI SS 316; Thrust Pad: Carbon steel with white metal lining; Gland Packing: SS 316; Stuffing Box Housing: SS 316or 13.5 to 17.5 % Ni Ci; Discharge Pipe and Flanges: Fabricated steel as per IS: 2062 with epoxy painting outside and glass coating or cement mortar coating inside.
11.0	**ACID DOSING TANK FOR CMB & GUARD POND**	
11.1	Number	One no.
11.2	MOC	MSRL
11.3	Type	Vertical Cylindrical with Dished Bottom
11.4	Effective Capacity	1 m^3 (min.) or required for 24 hrs. for simultaneous dosing in CMB & Guard Pond, whichever is higher.
12.0	**ALKALI DOSING TANK CMB & GUARD POND**	
12.1	Number	One
12.2	MOC	MSRL
12.3	Type	Vertical Cylindrical with Dished Bottom
12.4	Effective Capacity	1 m^3 (min.) or required for 24 hrs. for simultaneous dosing in CMB & Guard Pond, whichever is higher.
12.5	Agitator Motor in Alkali Dosing Tank for Stirrer	Slow speed stirrer driven by motor drive and reduction gear. Speed of stirrer = 200 RPM Max. Quantity: One/ tank. MOC: SS-316.
13.0	**Acid Dosing Pump for Guard Pond & CMB**	Nos. 2 x 100% each for CMB & Guard Pond; Total 4 nos. Type- Simplex hydraulically operated diaphragm type. Pressure Dampener: One no. per pump.

		Capacity- To be decided by bidder. Pump stroke speed per minute: Max. 100. Capacity control- 10-100% of capacity manually by micro-meter dial. MOC (Liquid End (Pump Head, Valves, Valve housing, valve spring etc.): Polypropylene. Diaphragm & packing: PTFE. Shaft: Hardened steel EN 8 (BS: 970). Worm & worm wheel (if applicable) & connecting rod: Manganese Bronze. Cross head guide: Bronze. Safety relief valve: Polypropylene. Accessories required for each pump: Coupling guard, drain plug, vent valve, isolation valves, Y-type strainers, pressure gauges, pulsation dampener etc.
14.0	**Alkali Dosing Pump for Guard Pond & CMB**	Nos. 2 x 100% each for CMB & Guard Pond; Total 4 nos. Type- Simplex hydraulically operated diaphragm type. Pressure Dampener: One no. per pump. Capacity- To be decided by bidder. Pump stroke speed per minute: Max. 100. Capacity control- 10-100% of capacity manually by micro-meter dial. MOC (Liquid End (Pump Head, Valves, Valve housing, valve spring etc.): SS316. Diaphragm & packing: PTFE. Shaft: Hardened steel EN 8 (BS: 970). Worm & worm wheel (if applicable) & connecting rod: Manganese Bronze. Cross head guide: Bronze. Safety relief valve: SS316. Accessories required for each pump: Coupling guard, drain plug, vent valve, isolation valves, Y-type strainers, pressure gauges, pulsation dampener etc.
15.0	**TUBE SETTLER**	
15.1	No.	One
15.2	Type of Construction	RCC Body (Media: MSEP/PP/PVC)
15.3	Capacity	125 CuM/Hr
15.4	Detention period (Flocculation Zone)	30 min
15.5	Detention period (Clarifier Zone)	150 min
15.6	Surface Flow Rate ($m^3/m^2/hr.$)	1.5 to 2.0
16.0	**SLUDGE PIT & TRANSFER PUMPS**	
16.1	Nos.	1 No.
16.2	No. of Compartments	1 No.
16.3	MOC	RCC
16.4	Effective Capacity	20 m^3
16.5	Sludge Transfer Pump Quantity/ Nos.	Two (2) (1W+1S)
16.6	Type of Pumps	Vertical (non-clog)
16.7	Capacity of each Pump	10 m^3/hr.
16.8	Head	As per PE-V0-412-164-A008 (PROCESS SIZING CALCULATION)
16.9	MOCs	Casing, Column Pipe, Impeller, Shaft, Line Shaft Coupling, Line Shaft Bearing, Wearing Ring, Shaft Sleeve: Duplex SS 2205 UNS 31803; All hardware under Water: AISI SS 316; Thrust Pad: Carbon steel with white metal lining; Gland Packing: SS 316; Stuffing Box Housing: SS 316or 13.5 to 17.5 % Ni Ci; Discharge Pipe and Flanges: Fabricated steel as per IS: 2062 with epoxy painting outside and glass coating or cement mortar coating inside.
17.0	**Chemical Dosing System at Tube Settler**	
17.1	**Lime Dosing System @ 70 ppm**	Tank Capacity: 5 m^3 (net); Tank MOC: MSEP; Sol. Strength: 5%.
17.2	**Alum Dosing System @ 40 ppm**	Tank Capacity: 5 m^3 (net); Tank MOC: MSRL; Sol. Strength: 10%.
17.3	**Poly Dosing System @ 1 ppm**	Tank Capacity: 5 m^3 (net); Tank MOC: MSRL. Sol. Strength: 0.5%.
17.4	Poly, Lime and Alum Dosing Pump	Nos. 2 x 100% for each chemical; Type- Simplex hydraulically operated diaphragm type for PE & Alum & screw type dosing pumps for Lime. Capacity- DDE. Pump stroke speed per minute: Max. 100. Capacity control- 10-100% of capacity manually by micro-meter dial Material- SS-316 [all wetted parts (pump head valve, valve housing etc.), valve spring]; Diaphragm/ Packing- PTFE; Shaft- Hardened

		steel EN-8-BS-970.
17.5	Accessories for Dosing Pumps	Pumps shall be provided with accessories e.g. Y-type suction strainers, pressure dampeners, PG, safety relief valves etc.
17.6	**Agitator for Dosing Tanks (PE, & Alum)**	Slow speed stirrer driven by motor drive and reduction gear. Speed of stirrer = 200 RPM Max. Quantity: One/ tank. MOC: SS-316. Type: Vertical.
17.7	**Agitator for Dosing Tanks (Lime)**	Slow speed stirrer driven by motor drive and reduction gear. Speed of stirrer = 200 RPM Max. Quantity: One/ tank. MOC: MS. Type: Horizontal.
18.0	**CHEMICAL HOUSE FOR ETP**	Two (2) storey building. Location: Near Tube Settler. MCC room and Chemical storage of Lime, PE, Alum, Acid & Alkali for ETP Plant for 30 days (min.) shall be on ground floor. However, dosing facilities and control room shall be at first floor. Handling facility: 2 nos. electrically operated mono-rail hoist (min. 1 ton capacity with trailing cable). Two (2) weighing scale shall be provided of 0-500 Kg and 0-2000 Kg capacity.
19.0	**CENTRAL MONITORING BASIN (CMB)**	
19.1	No.	One (1)
19.2	No. of Compartments	Two (2)
19.3	Type	Partially underground/ Partially above ground
19.4	MOC	RCC
19.5	Effective Capacity	1000 m^3 (total capacity)
20.0	**CMB DISPOSAL PUMPS**	
20.1	Quantity / Nos.	Two (2) (1W+1S)
20.2	Type of Pumps	Vertical Turbine
20.3	Capacity of each Pump	1000 m^3/hr.
20.4	Head	As per PE-V0-412-164-A008 (PROCESS SIZING CALCULATION)
20.5	MOC	Casing, Column Pipe, Impeller, Shaft, Line Shaft Coupling, Line Shaft Bearing, Wearing Ring, Shaft Sleeve, All hardware under Water: Duplex SS 2205 UNS 31803; Thrust Pad: Carbon steel with white metal lining; Discharge Pipe & flanges: Fabricated steel as per IS: 2062 with epoxy painting outside and glass coating or cement mortar coating inside; Gland Packing: Impregnated Teflon; Stuffing Box Housing: SS 316 or 13.5 to 17.5 % Ni Ci.
21.0	**OVERHEAD WATER STORAGE TANK**	
21.1	Location	Above chemical house
21.2	Tank type	RCC
21.3	Capacity of tank	To meet the 24 hours requirement of flushing of all chemical lines, and simultaneous preparation of all chemical solutions or minimum 5 m^3 whichever is higher.
22.0	**WEIGHING SCALE**	
22.1	Location	Inside chemical house
22.2	Quantity	Two (2) nos.
22.3	Type	Platform & dial type
22.4	Capacity	0-500 & 0-2000 Kg.
23.0	**AIR BLOWERS FOR SLUDGE PIT**	
23.1	Number	Two (2 x 100%) nos.
23.2	Type	Centrifugal/ Twin lobe type, oil free, positive displacement.
23.3	Duty	Intermittent.
23.4	Capacity and head	As required.
23.5	Noise Level	80 dB (A) max. at one meter
23.6	Pressure gauge	One per blower.
23.7	Material of construction	Casing – Cast Iron GR FG 260 to IS 210 Lobe – Cast Iron GR FG 260 to IS 210 Shaft – Carbon Steel to EN 8
23.8	Drive motor	The drive motor of each air blower will be Energy Efficiency Class IE-3 as per IS : 12615

24.0	**VALVES FOR CORROSIVE/RO REJCT (STAGE-II) WATER HANDLING (CMB AND ONWARDS APPLICATION EXCEP GUARD POND)**	
24.1	Gate (All gate valves shall have flanged end connections, it shall be outside screw rising stem type with hand wheel)	Body/Bonnet – ASTM A 351, Gr.- CF 3M. Stem – stainless steel AISI 410/ 13% chrome steel. Disc/Gate – ASTM A 351, Gr.- CF 3M. Seat & seat rings – ASTM A 351, Gr.- CF 3M. Hand wheel- Cast iron.
24.2	NRV (All NRV shall have flanged end connection. For bore greater than 50 mm valves shall be swing check type. For bore smaller than or equal to 50 mm it shall be piston type).	Swing Check type Body – ASTM A 351, Gr.- CF 3M Disc/door – ASTM A 351, Gr.- CF 3M Hinged pin – ASTM A 351, Gr.- CF 3M. Piston type Body – ASTM A 351, Gr.- CF 3M. Hinge pin – SS316 Piston – ASTM A 351, Gr.- CF 3M.
24.3	Ball valve	Type :Full bore Rating: PN 10 (min). Body: ASTM A 351, Gr.- CF 3M. Ball: ASTM A 351, Gr.- CF 3M. Seat ring: PTFE Stem: ASTM A 351, Gr.- CF 3M Seat: Nitrile rubber,PTFE
24.5	Globe valve	Type: Double flanged. Rating: PN 10 (min). Body: ASTM A 351, Gr.- CF 3M Plug: ASTM A 351, Gr.- CF 3M Seat ring: ASTM A 351, Gr.- CF 3M
24.6	Plug Valve	Type :Full bore Rating: PN 10 (min). Body: ASTM A 351, Gr.- CF 3M Plug: ASTM A 351, Gr.- CF 3M Sleeve: PTFE.
24.7	Butterfly valve	Butterfly valves shall be of double flanged type of low leakage rate confirming to AWWA-C-504 class 150 (min.) or BS:5155 PN 10 (min.) Body: ASTM A 351, Gr.- CF 3M. Disc: ASTM A 351, Gr.- CF 3M. Shaft: ASTM A 351, Gr.- CF 3M. Seat rings: Nitrilerubber, EPDM,Hypalon All the butterfly valves shall be provided with Hand wheel or lever as per the requirements. All the butterfly valves shall be provided with an indicator to show the position of the disc. Flanges shall conform to ANSI B 16.5 Cl.150 (min).
24.8	Diaphragm valve	The Diaphragm shall conform to following requirement i) Design standard: BS:5156 or equivalent of required rating/class. (minimum rating of valves shall be PN 10). ii) Type: Flanged and lined body ends, sealed bonnet, weir pattern, tight shut off type iii) Material of Construction a. Body , Bonnet: Cast iron IS 210 Gr. FG 260 or equivalent or Cast steel ASTM A-216 Gr. WCB b. Body lining : Soft natural rubber, ebonite , Polypropelene c. Handwheel : Cast Iron d. Compressor : ASTM A 351, Gr.- CF 3M. e. Stem and Bush : ASTM A 351, Gr.- CF 3M.
25.0	**VALVES FOR SEA WATER/RO REJCT (STAGE-I) WATER HANDLING (GUARD POND AND ONWARDS APPLICATION)**	
25.1	Gate (All gate valves shall have flanged end connections, it shall be outside screw rising stem type with hand wheel)	Body/Bonnet – Super duplex stainless steel, ASTM A890-5A (CE3MN). Stem – stainless steel AISI 410/ 13% chrome steel. Disc/Gate – Super duplex stainless steel, ASTM A890-5A (CE3MN). Seat & seat rings – Duplex Stainless Steel. Hand wheel- Cast iron.
25.2	NRV (All NRV shall have flanged end connection. For bore greater than 50 mm valves shall be swing check type. For bore smaller than or equal to 50	Swing Check type Body – Super duplex stainless steel, ASTM A890-5A (CE3MN). Disc/door – Super duplex stainless steel, ASTM A890-5A (CE3MN). Hinged pin – Duplex Stainless Steel.

	mm it shall be piston type).	Piston type Body – Super duplex stainless steel, ASTM A890-5A (CE3MN). Hinge pin – SS316 Piston – Super duplex stainless steel, ASTM A890-5A (CE3MN).
25.3	Ball valve	Type :Full bore Rating: PN 10 (min). Body: Super duplex stainless steel, ASTM A890-5A (CE3MN). Ball: Super duplex stainless steel, ASTM A182-F53 or ASTM A890-5A (CE3MN). Seat ring: PTFE Stem: Super duplex stainless steel, ASTM A890-5A (CE3MN) or Zeron 100 Seat: Nitrile rubber,PTFE
25.4	Globe valve	Type: Double flanged. Rating: PN 10 (min). Body: Super duplex stainless steel, ASTM A890-5A (CE3MN). Plug: Super duplex stainless steel, ASTM A890-5A (CE3MN). Seat ring: Super duplex stainless steel, ASTM A890-5A (CE3MN).
25.5	Plug Valve	Type :Full bore Rating: PN 10 (min). Body: Super duplex stainless steel, ASTM A890-5A (CE3MN). Plug: Super duplex stainless steel, ASTM A890-5A (CE3MN). Sleeve: PTFE.
25.6	Butterfly valve	Butterfly valves shall be of double flanged type of low leakage rate confirming to AWWA-C-504 class 150 (min.) or BS:5155 PN 10 (min.) Body: ASTM A995 Gr. 5A - CE3MN (Duplex Stainless Steel). Disc: ASTM A995 Gr. 5A - CE3MN (Duplex Stainless Steel). Shaft: ASTM A276 S31803 (Duplex Stainless Steel). Seat rings: Nitrilerubber, EPDM,Hypalon All the butterfly valves shall be provided with Hand wheel or lever as per the requirements. All the butterfly valves shall be provided with an indicator to show the position of the disc. Flanges shall conform to ANSI B 16.5 Cl.150 (min).
25.7	Diaphragm valve	The Diaphragm shall conform to following requirement i) Design standard: BS:5156 or equivalent of required rating/class. (minimum rating of valves shall be PN 10). ii) Type: Flanged and lined body ends, sealed bonnet, weir pattern, tight shut off type iii) Material of Construction a. Body , Bonnet: Cast iron IS 210 Gr. FG 260 or equivalent or Cast steel ASTM A-216 Gr. WCB b. Body lining : Soft natural rubber, ebonite , Polypropelene c. Handwheel : Cast Iron d. Compressor : Duplex Stainless steel. e. Stem and Bush : Duplex Stainless steel.
26.0	**VALVES FOR OTHER THAN CORROSIVE/RO REJCT/SEWA WATER HANDLING**	In place of ASTM A 351, Gr.- CF 3M (sl no 24.0 above) the replaced MOC shall be IS : 210, Gr.- FG 260.
27.0	**PIPE**	**Refer PE-V0-412-164-A004: P & ID FOR EFFLUENT TREATMENT PLANT**
28.0	**SAFETY EQIPMENTS**	Four sets of safety equipment comprising PVC protection suits with hoods, rubber boots, face visors and thick PVC gauntlets shall also be provided. A personnel water drench shower and eye bath shall be provided.

Note: All internal & external hardware for valves shall be SS 316.

SECTION – C2

(SPECIFIC TECHNICAL REQUIREMENTS FOR ELECTRICAL)

ELECTRICAL EQUIPMENT SPECIFICATION

TECHNICAL SPECIFICATION

FOR

EFFLUENT TREATMENT PALNT (ELECTRICAL PORTION)

1.0 EQUIPMENT & SERVICES TO BE PROVIDED BY BIDDER:

a) Services and equipment as per "Electrical Scope between BHEL and Vendor".
b) Any item/work either supply of equipment or erection material which have not been specifically mentioned but are necessary to complete the work for trouble free and efficient operation of the plant shall be deemed to be included within the scope of this specification. The same shall be provided by the bidder without any extra charge.
c) Supply of mandatory spares as specified in the specifications of mechanical equipments.
d) Electrical load requirement for Condensate Poilishing Unit
e) All equipment shall be suitable for the power supply fault levels and other climatic conditions mentioned in the enclosed project information.
f) Bidder to furnish list of makes for each equipment at contract stage, which shall be subject to customer/BHEL approval without any commercial and delivery implications to BHEL
g) Various drawings, data sheets as per required format, Quality plans, calculations, test reports, test certificates, operation and maintenance manuals etc shall be furnished as specified at contract stage. All documents shall be subject to customer/BHEL approval without any commercial implication to BHEL.
h) Motor shall meet minimum requirement of motor specification.
i) Vendor to clearly indicate equipment locations and local routing lengths in their cable listing furnished to BHEL.
j) Cable BOQ worked out based on routing of cable listing provided by the vendor for " both end equipment in vendor's scope"shall be binding to the vendor with +10 % margin to take care of slight variation in routing length & wastages.

2.0 EQUIPMENT & SERVICES TO BE PROVIDED BY PURCHASER FOR ELECTRICAL & TERMINAL POINTS:

Refer "Electrical Scope between BHEL and Vendor".

3.0 DOCUMENTS TO BE SUBMITTED ALONG WITH BID

3.1 The electrical specification without any deviation from the technical/quality assurance requirements stipulated shall be deemed to be complied by the bidder in case bidder furnishes the overall compliance of package technical specification in the form of compliance certificate/No deviation certificate.

3.2 No technical submittal such as copies of data sheets, drawings, write-up, quality plans, type test certificates, technical literature, etc, is required during tender stage. Any such submission even if made, shall not be considered as part of offer.

4.0 List of enclosures :

a) Electrical scope between BHEL & vendor.
b) Technical specification for motors.
c) Datasheets & quality plan for motors.
d) Electrical Load data format.
e) BHEL cable listing format.

ELECTRICAL LOAD FORMAT

LOAD TITLE	RATING (KW / A)		UNIT (U)/STN (S)	Nos.		VOLTAGE CODE*	FEEDER CODE**	EMER. LOAD (Y)	CONT.(C)/ INTT.(I)	STARTING TIME >5 SEC (Y)	LOCATION	BOARD NO.	CABLE		BLOCK CABLE DRG. No.	CONTROL CODE	REMARKS	LOAD No.
	NAME PLATE	MAX. CONT. DEMAND (MCR)		RUNNING	STANDBY								SIZE CODE	NOs				
1	2	3	4	5	6	7	8	9	10	11	12	13	14	15	16	17	18	19

NOTES: 1. COLUMN 1 TO 12 & 18 SHALL BE FILLED BY THE REQUISITIONER (ORIGINATING AGENCY); REMAINING COLUMNS ARE TO BE FILLED UP BY PEM (ELECTRICAL)

2. ABBREVIATIONS : * VOLTAGE CODE (7):- (ac) A=11 KV, B=6.6 KV, C=3.3 KV, D=415 V, E=240 V (1 PH), F=110 V (dc): G=220 V, H=110 V, J=48 V, K=+24V, L=-24 V

: ** FEEDER CODE (8):- U=UNIDIRECTIONAL STARTER, B=BI-DIRECTIONAL STARTER, S=SUPPLY FEEDER, D=SUPPLY FEEDER (CONTACTER CONTROLLED)

	LOAD DATA (ELECTRICAL)	JOB NO.	402	ORIGINATING AGENCY		PEM (ELECTRICAL)
		PROJECT TITLE	2X660 MW ENNORE SEZ STPP	NAME		DATA FILLED UP ON
		SYSTEM	EFFLUENT TREATMENT PLANT	SIGN.		DATA ENTERED ON
		DEPTT. / SECTION	ELECTRICAL	SHEET 1 OF 1	REV. 00	DE'S SIGN. & DATE

ELECTRICAL SCOPE BETWEEN BHEL AND VENDOR

ELECTRICAL SCOPE BETWEEN BHEL AND VENDOR (FOR EPC PROJECTS)

PACKAGES: EFFLUENT TREATMENT PLANT

SCOPE OF VENDOR: SUPPLY, ERECTION & COMMISSIONING OF VENDOR'S EQUIPMENT

PROJECT: 2X660 MW ENNORE SEZ COAL BASED STPP

S.NO	DETAILS	SCOPE SUPPLY	SCOPE E&C	REMARKS
1	415V MCC	BHEL	BHEL	240 V AC (supply feeder)/415 V AC (3 PHASE 4 WIRE) supply shall be provided by BHEL based on load data provided by vendor at contract stage for all equipment supplied by vendor as part of contract. Any other voltage level (AC/DC) required will be derived by the vendor.
2	Local Push Button Station (for motors)	BHEL	BHEL	Located near the motor.
3	Power cables, control cables and screened control cables for a) both end equipment in BHEL's scope b) both end equipment in vendor's scope c) one end equipment in vendor's scope	 BHEL BHEL BHEL	 BHEL BHEL BHEL	1. For 3.b) & c): Sizes of cables required shall be informed by vendor at contract stage (based on inputs provided by BHEL) in the form of cable listing. Finalisation of cable sizes shall be done by BHEL. Vendor shall provide lugs & glands accordingly. 2. Termination at BHEL equipment terminals by BHEL. 3. Termination at Vendor equipment terminals by Vendor.
4	Junction box for control & instrumentation cable	Vendor	BHEL	Number of Junction Boxes shall be sufficient and positioned in the field to minimize local cabling (max 10-12 mtrs) and trunk cable.
5	Any special type of cable like compensating, co-axial, prefab, MICC, optical fibre etc.	Vendor	BHEL	Refer C&I portion of specification for scope of fibre Optical cables if used between PLC/ microprocessor & DCS.
6	Cable trays, accessories & cable trays supporting system 100/ 50 mm cable trays/ Conduits/ Galvanised steel cable troughs for local cabling	BHEL Vendor	BHEL BHEL	Local cabling from nearby main route cable tray (BHEL scope) to equipment terminal (vendor's scope) shall be through 100/ 50 mm. cable trays/ conduits/ Galvanised steel cable troughs, as per approved layout drawing during contract stage.
7	Cable glands ,lugs and bimetallic strip for equipment supplied by Vendor	Vendor	BHEL	1. Double compression Ni-Cr plated brass cable glands 2. Solder less crimping type heavy duty tinned copper lugs for power and control cables.
8	Conduit and conduit accessories for cabling between equipment supplied by vendor	Vendor	BHEL	Conduits shall be medium duty, hot dip galvanised cold rolled mild steel rigid conduit as per IS: 9537.
9	Lighting	BHEL	BHEL	
10	Equipment grounding (including electronic earthing) & lightning protection	BHEL	BHEL	Refer note no. 4 for electronic earthing
11	Below grade grounding	BHEL	BHEL	
12	LT Motors with base plate and foundation hardware	Vendor	BHEL	Makes shall be subject to customer/ BHEL approval at contract stage.

ELECTRICAL SCOPE BETWEEN BHEL AND VENDOR (FOR EPC PROJECTS)

PACKAGES: EFFLUENT TREATMENT PLANT

SCOPE OF VENDOR: SUPPLY, ERECTION & COMMISSIONING OF VENDOR'S EQUIPMENT

PROJECT: 2X660 MW ENNORE SEZ COAL BASED STPP

S.NO	DETAILS	SCOPE SUPPLY	SCOPE E&C	REMARKS
13	Mandatory spares	Vendor	-	Vendor to quote as per specification.
14	Recommended O & M spares	Vendor	-	As specified elsewhere in specification
15	Any other equipment/ material/ service required for completeness of system based on system offered by the vendor (to ensure trouble free and efficient operation of the system).	Vendor	BHEL	
16	a) Input cable schedules (Control & Screened Control Cables) b) Cable interconnection details for above c) Cable block diagram	Vendor Vendor Vendor	- - -	Cable listing for Control and Instrumentation Cable and electronic earthing cable in enclosed excel format shall be submitted by vendor during detailed engineering stage.
17	Electrical Equipment & cable tray layout drawings	Vendor	-	For ensuring cabling requirements are met, vendor shall furnish Electrical equipment layout & cable tray layout drawings (both in print form as well as in AUTOCAD) of the complete plant (including electrical area) indicating location and identification of all equipment requiring cabling, and shall incorporate cable trays routing details marked on the drawing as per PEM interface comments. Cabling arrangement of the same (wherever overhead cable trays, trenches, cable ducts, conduits etc.) shall be decided during contract stage. Electrical equipment layout & cable tray layout drawing shall be subjected to BHEL/ customer approval without any commercial implications to BHEL.
18	Electrical Equipment GA drawing	Vendor	-	For necessary interface review.

NOTES:

1. Make of all electrical equipment/ items supplied shall be reputed make & shall be subject to approval of BHEL/customer after award of contract.
2. All QPs shall be subject to approval of BHEL/customer after award of contract without any commercial implication.
3. In case the requirement of Junction Box arises on account of Power Cable size mis-match due to vendor engineering at later stage, vendor shall supply the Junction Box for suitable termination.
4. Vendor shall indicate location of Electronic Earth pit in their Civil assignment drawing.

SECTION – C3

(SPECIFIC TECHNICAL REQUIREMENTS FOR C&I)

1.0 SCOPE OF SUPPLY

Instrumentation (Minimum) as shown in the flow diagram, however any additional instrumentation required to complete the system will be in bidder's scope. All required piping, tubing and wiring for instrumentation including fittings, support and other accessories.

- Instruments (Transmitter, Indicator, Gauges, Switches, Analysers, Actuators, etc) as indicted in enclosed **PE-V0-412-164-A004: P & ID FOR EFFLUENT TREATMENT PLANT.**
- Any other instrument not listed but required to complete the system.

2.0 BASIC CONTROL PHILOSOPHY :

i) The overall operation & control of entire ETP shall be through standalone control system of DDCMIS family (BHEL Scope), located in ETP Control Room near CMB & Guard Pond. Other sumps outside ETP area shall be controlled from nearby control system.

ii) All sump pumps will be operated by level controls (low/ high) at the sump & pump discharge pressure (low/ high).

iii) For auto operation, one pump shall be kept in Auto running and the other pump shall be kept in Auto standby. The pump selected in Auto running shall start at high level LT and trip at low level LT.

iv) All controls, fault indications/ alarms, interlocks, logics shall be implemented in standalone

v) control system of DDCMIS family.A mimic with the status of drives including ON, OFF, TRIP indication of respective motors/pumps and control valve shall be provided on the OWS of DDCMIS.

vi) All the dosing pumps shall be capable of being adjusted manually to any output with in the stated range.

vii) All pumps shall trip at level low in respective tanks or Sumps.

viii) All remote indications from instruments as per P & ID such as raw water flow transmitter, opening / closing status and percentage positioning indicator for inlet motor operated flow control valve, level indicating controller for Clarified Water Tank etc. shall be available on the OWS.

ix) Alarm annunciations as per P & ID & as per system requirement and trip annunciation of all drives shall be displayed on OWS (BHEL Scope).

x) Local Start/Stop facility from individual pump shall be provided.

SECTION-D

(GENERAL TECHNICAL REQUIREMENT)

SECTION-D1

(GENERAL TECHNICAL REQUIREMENT FOR MECHANICAL)

1.0 SYSTEM DESCRIPTION EFFLUENT TREATMENT PLANT (PE-V0-412-164-A004: P & ID):

Following effluents will be transferred/ collected/ treated in the Effluent Treatment Plant:

- Cooling Tower Blow Down
- Clarifier & Filters Sludge
- RO Stage-I & RO Stage-II
- N-PIT Waste
- Coal Mil Area Waste Water
- Oily Effluent from Power House Area
- Treated Oily Waste Water from F.O. Pump House
- Boiler and ESP Area Wash Water
- Condenser Waste Waster
- Ash Silo Area Effluent
- Transformer Yard Waste Water
- Guard Pond
- Debris Filter Waste
- Central Monitoring Basin

a) Cooling Water Blow Down (No interface with ET Plant)

CTBD will be pumped back to the sea with the help of blowdown pumps installed in CW pump house. Connection from CTBD shall also be given to the ash water sump with isolation valve.

b) Clarifier & Filters Sludge

The water pre-treatment plant waste (sludge) & filters contains suspended particles in high concentration. These effluents will be sent to a reject sump and led to guard pond for further treatment, from there by means of sludge disposal pumps.

c) RO Stage-I & RO Stage-II

The RO stage I reject shall be led to Guard Pond. However, for exigency condition, a provision to guard pond shall also be provided. RO stage II reject shall be used for CHP dust suppression, green belt development and led to central monitoring basin.

d) N-PIT Waste

The neutralized regeneration waste/ effluent (CPU & DM Plant N-PIT waste) from CPU N-PIT shall be led to Central Monitoring Basin.

e) Coal Mil Area Waste Water

Coal Mil Area Effluent containing substantial high quantity of oil and suspended solids will be channelized unit wise to respective Coal Mil Oily Waste Water Sumps (2 nos. per unit, each of 5 m^3 cap.) from where it will be pumped to respective unit's Power House Oily Water Sump (PHOWS).

f) Oily Effluent from Power House Area

Power House Area Effluent generated from floor washings, leakages from bearing and turbine cooling systems, leakage from pumps, hydraulic couplings, oil leakage from oil burners etc. containing suspended solids and some oil and grease will be channelized to a respective unit's. From both unit's the oily waste shall be transferred to a common Tilted Plate Interceptor (TPI) by two (1W+1S) screw pumps each unit. In TPI type oil-water separator suspended solids would be efficiently separated at bottom and oil/ grease at the top and collected in suitable Slop Oil Tank (SOT). Since this oil will be a mixture of lubricants, grease,

hydraulic oil, HSD, HFO etc., it will be sold out after recovery through authorized agency for handling such waste. Clean water from the middle portion of the TPI will be led to the Tube settler. Common TPI will be located near the Guard Pond.

g) Oily Handling Area Run Off (Fuel Oil Handling & Storage System)

Oily effluent from FO Pump House and FO Storage Unloading Area after its collection in sump inside FO Pump House and its treatment in API separator shall be led to TPI Separator, for further treatment, located near Guard Pond.

h) Coal Pile Area Run Off System

Coal Pile Area Run Off shall completely be taken care (handling/ treatment/ transfer) by BHEL's Coal Handling Plant agency.

i) Boiler and ESP Area Wash Water

Boiler & ESP area floor washing drain having high TSS will be led to a respective unit's Pre-settling pit. Overflow from this pre-settling pit will be led to a sump. Sump pumps will be installed to transfer this effluent to Tube Settler for further treatment in tube settler. The treated water from the tube settler will be led to CMB for equalization.

The trench that will convey boiler and ESP area wash water may receive huge rainfall runoff during heavy down pour. During such condition of continuous heavy rains, the total quantity of waste water at the trench leading to the pre-settling pit will be so high that it cannot be handled in the pre- settling pit and Tube Settler. In fact, after initial few minutes of heavy rains the rainfall runoff is not expected to contain any suspended solids. Hence, an overflow weir controlled by-pass system is proposed before the pre-settling pit to divert such rainfall runoff to the nearby storm drain.

j) Condenser Waste Waster (No interface with ET Plant)

This is an irregular wastewater that may be generated occasionally during maintenance. This effluent shall be led to the respective unit's Debris filter discharge pit, from where it shall be transferred to CW Blow Down Header.

k) Transformer Yard Waste Water

In the event of fire and/ or bursting of transformer causing loss of containment of transformer oil, spilled oil is collected in a common oil pit. The oily waste shall be collected in respective unit's Retention Pit for Oily Waste Water which shall be transferred by screw pumps per retention pit to PHOWS for further transfer and treatment in common TPI separator.

l) Ash Silo Area Effluent (No interface with ET Plant)

This effluent including its transfer/ treatment in line with technical specification, subsequent clarifications & amendments/ approved details shall completely be taken care by Ash Handling Plant's agency (BHEL ISG).

m) Guard Pond

All liquid sea water effluent after required treatment and unused treated effluent from Central monitoring basin will be led to a Guard Pond, which acts as an equalization basin. This Guard pond will also take care of shock loads and/or mal-functioning/ failure of any treatment equipment/ process.

Various instruments including pH analyzer, Turbidity meter, Flow transmitter, Temperature transmitter and Pressure transmitter shall be provided at the discharge header of Guard Pond Effluent Transfer Pumps. After pH correction in Guard Pond, treated effluent shall be pumped back to the hot water return channel of

NCTPS Stage I near seal well. Connection from guard pump discharge shall also be provided to the ash water sump.

Suitable acid and alkali tanks with metering pumps shall be located near guard pond for pH correction.

Monitoring instruments, as indicated in enclosed P&ID, will also be provided for monitoring the quality of effluents before the final discharge from the guard pond.

n) Debris Filter Waste (No interface with ET Plant)

The debris filter waste shall be led CW Blow Down Header.

o) Central Monitoring Basin

All non-sea water effluent shall be led to the central monitoring basin (refer enclosed P&ID for Effluent Treatment Plant). These wastes shall include RO Stage II Reject, N Pit Effluent, and Effluent from Oil Water Separator etc.

Water from CMB shall be used for CHP Dust Suppression, Horticulture and excess shall be led to guard pond by means of pumps.

SECTION-D2

(GENERAL TECHNICAL REQUIREMENT FOR ELECTRICAL)

STANDARD SPECIFICATION FOR MOTORS

GENERAL TECHNICAL REQUIREMENTS

FOR

LV MOTORS

SPECIFICATION NO.: PE-SS-999-506-E101 Rev 00

1.0 INTENT OF SPECIFIATION

The specification covers the design, materials, constructional features, manufacture, inspection and testing at manufacturer's work, and packing of Low voltage (LV) squirrel cage induction motors along with all accessories for driving auxiliaries in thermal power station.

Motors having a voltage rating of below 1000V are referred to as low voltage (LV) motors.

2.0 CODES AND STANDARDS

Motors shall fully comply with latest edition, including all amendments and revision, of following codes and standards:

IS:325	Three phase Induction motors
IS : 900	Code of practice for installation and maintenance of induction motors
IS: 996	Single phase small AC and universal motors
IS: 4722	Rotating Electrical machines
IS: 4691	Degree of Protection provided by enclosures for rotating electrical machines
IS: 4728	Terminal marking and direction of rotation rotating electrical machines
IS: 1231	Dimensions of three phase foot mounted induction motors
IS: 8789	Values of performance characteristics for three phase induction motors
IS: 13555	Guide for selection and application of 3-phase A.C. induction motors for different types of driven equipment
IS: 2148	Flame proof enclosures for electrical appliance
IS: 5571	Guide for selection of electrical equipment for hazardous areas
IS: 12824	Type of duty and classes of rating assigned
IS: 12802	Temperature rise measurement for rotating electrical machnines
IS: 12065	Permissible limits of noise level for rotating electrical machines
IS: 12075	Mechanical vibration of rotating electrical machines

In case of imported motors, motors as per IEC-34 shall also be acceptable.

3.0 DESIGN REQUIREMENTS

3.1 Motors and accessories shall be designed to operate satisfactorily under conditions specified in data sheet-A and Project Information, including voltage & frequency variation of supply system as defined in Data sheet-A

3.2 Motors shall be continuously rated at the design ambient temperature specified in Data Sheet-A and other site conditions specified under Project Information
Motor ratings shall have at least a 15% margin over the continuous maximum demand of the driven equipment, under entire operating range including voltage & frequency variation specified above.

3.3 Starting Requirements

3.3.1 Motor characteristics such as speed, starting torque, break away torque and starting time shall be properly co-ordinated with the requirements of driven equipment. The accelerating torque at any speed with the minimum starting voltage shall be at least 10% higher than that of the driven equipment.

3.3.2 Motors shall be capable of starting and accelerating the load with direct on line starting without exceeding acceptable winding temperature.

The limiting value of voltage at rated frequency under which a motor will successfully start and accelerate to rated speed with load shall be taken to be a constant value as per Data Sheet - A during the starting period of motors.

3.3.3 The following frequency of starts shall apply

i) Two starts in succession with the motor being initially at a temperature not exceeding the rated load temperature.

ii) Three equally spread starts in an hour the motor being initially at a temperature not exceeding the rated load operating temperature. (not to be repeated in the second successive hour)

iii) Motors for coal conveyor and coal crusher application shall be suitable for three consecutive hot starts followed by one hour interval with maximum twenty starts per day and shall be suitable for mimimum 20,000 starts during the life time of the motor

3.4 **Running Requirements**

3.4.1 Motors shall run satisfactorily at a supply voltage of 75% of rated voltage for 5 minutes with full load without injurious heating to the motor.

3.4.2 Motor shall not stall due to voltage dip in the system causing momentary drop in voltage upto 70% of the rated voltage for duration of 2 secs.

3.5 **Stress During bus Transfer**

3.5.1 Motors shall withstand the voltage, heavy inrush transient current, mechanical and torque stress developed due to the application of 150% of the rated voltage for at least 1 sec. caused due to vector difference between the motor residual voltage and the incoming supply voltage during occasional auto bus transfer.

3.5.2 Motor and driven equipment shafts shall be adequately sized to satisfactorily withstand transient torque under above condition.

3.6 Maximum noise level measured at distance of 1.0 metres from the outline of motor shall not exceed the values specified in IS 12065.

3.7 The max. vibration velocity or double amplitude of motors vibration as measured at motor bearings shall be within the limits specified in IS: 12075.

4.0 **CONSTRUCTIONAL FEATURES**

4.1 Indoor motors shall conform to degree of protection IP: 54 as per IS: 4691. Outdoor or semi-indoor motors shall conform to degree of protection IP: 55 as per IS: 4691and shall be of weather-proof construction. Outdoor motors shall be installed under a suitable canopy

4.2 Motors upto 160KW shall have Totally Enclosed Fan Cooled (TEFC) enclosures, the method of cooling conforming to IC-0141 or IC-0151 of IS: 6362.

Motors rated above 160 KW shall be Closed Air Circuit Air (CACA) cooled

4.3 Motors shall be designed with cooling fans suitable for both directions of rotation.

4.4. Motors shall not be provided with any electric or pneumatic operated external fan for cooling the motors.

4.5 Frames shall be designed to avoid collection of moisture and all enclosures shall be provided with facility for drainage at the lowest point.

4.6 In case Class 'F' insulation is provided for LV motors, temperature rise shall be limited to the limits applicable to Class 'B' insulation.
In case of continuous operation at extreme voltage limits the temperature limits specified in table-1 of IS:325 shall not exceed by more than 10°C.

4.7 **Terminals and Terminal Boxes**

4.7.1 Terminals, terminal leads, terminal boxes, windings tails and associated equipment shall be suitable for connection to a supply system having a short circuit level, specified in the Data Sheet-A.

Unless otherwise stated in Data Sheet-A, motors of rating 110 kW and above will be controlled by circuit breaker and below 110 kW by switch fuse-contactor. The terminal box of motors shall be designed for the fault current mentioned in data sheet "A".

4.7.2 unless otherwise specified or approved, phase terminal boxes of horizontal motors shall be positioned on the left hand side of the motor when viewed from the non-driving end.

4.7.3 Connections shall be such that when the supply leads R, Y & B are connected to motor terminals A B & C or U, V & W respectively, motor shall rotate in an anticlockwise direction when viewed from the non-driving end. Where such motors require clockwise rotation, the supply leads R, Y, B will be connected to motor terminals A, C, B or U W & V respectively.

4.7.4 Permanently attached diagram and instruction plate made preferably of stainless steel shall be mounted inside terminal box cover giving the connection diagram for the desired direction of rotation and reverse rotation.

4.7.5 Motor terminals and terminal leads shall be fully insulated with no bar live parts. Adequate space shall be available inside the terminal box so that no difficulty is encountered for terminating the cable specified in Data Sheet-A.

4.7.6 Degree of protection for terminal boxes shall be IP 55 as per IS 4691.

4.7.7 Separate terminal boxes shall be provided for space heaters.. If this is not possible in case of LV motors, the space heater terminals shall be adequately segregated from the main terminals in the main terminal box. Detachable gland plates with double compression brass glands shall be provided in terminal boxes.

4.7.8. Phase terminal boxes shall be suitable for 360 degree of rotation in steps of 90 degree for LV motors.

4.7.9 Cable glands and cable lugs as per cable sizes specified in Data Sheet-A shall be included. Cable lugs shall be of tinned Copper, crimping type.

4.8 Two separate earthing terminals suitable for connecting G.I. or MS strip grounding conductor of size given in Data Sheet-A shall be provided on opposite sides of motor frame. Each terminal box shall have a grounding terminal.

4.9 **General**

4.9.1 Motors provided for similar drives shall be interchangeable.

4.9.2 Suitable foundation bolts are to be supplied alongwith the motors.

4.9.3 Motors shall be provided with eye bolts, or other means to facilitate safe lifting if the weight is 20Kgs. and above.

4.9.4 Necessary fitments and accessories shall be provided on motors in accordance with the latest Indian Electricity rules 1956.

4.9.5 All motors rated above 30 kW shall be provided with space heaters to maintain the motor internal air temperature above the dew point. Unless otherwise specified, space heaters shall be suitable for a supply of 240V AC, single phase, 50 Hz.

4.9.6 Name plate with all particulars as per IS: 325 shall be provided

4.9.7 Unless otherwise specified, the colour of finish shall be grey to Shade No. 631 and 632 as per IS:5 for motors installed indoor and outdoor respectively. The paint shall be epoxy based and shall be suitable for withstanding specified site conditions.

5.0 INSPECTION AND TESTING

5.1 All materials, components and equipments covered under this specification shall be procured, manufactured, as per the BHEL standard quality plan No. PED-506-00-Q-006/0 and PED-506-00-Q-007/2 enclosed with this specification and which shall be complied.

5.2 LV motors of type-tested design shall be provided. Valid type test reports not more than 5 year shall be furnished. In the absence of these, type tests shall have to be conducted by manufacturer without any commercial implication to purchaser.

5.3 All motors shall be subjected to routine tests as per IS: 325 and as per BHEL standard quality plan.

5.4 Motors shall also be subjected to additional tests, if any, as mentioned in Data Sheet A.

6.0 DRAWINGS TO BE SUBMITTED AFTER AWARD OF CONTRACT

a) OGA drawing showing the position of terminal boxes, earthing connections etc.
b) Arrangement drawing of terminal boxes.
c) Characteristic curves:
(*To be given for motor above 55 kW unless otherwise specified in Data Sheet*).

i) Current vs. time at rated voltage and minimum starting voltage.
ii) Speed vs. time at rated voltage and minimum starting voltage.
iii) Torque vs. speed at rated voltage and minimum voltage.
For the motors with solid coupling the above curves i), ii), iii) to be furnished for the motors coupled with driven equipment. In case motor is coupled with mechanical equipment by fluid coupling, the above curves shall be furnished with and without coupling.
iv) Thermal withstand curve under hot and cold conditions at rated voltage and max. permissible voltage.

BASIC TECHNICAL FEATURES OF MOTORS

BASIC TECHNICAL FEATURES

FOR HT/LT MOTORS

(FOR BHEL-PEM SCOPE PACKAGES)

REV	DATE	ALTD	CHD	APPD
02	13.05.15	RKG/ AB	SL	RG

REVISED AS PER TANGEDCO COMMENTS DATED 10.04.2015

REV	DATE	ALTD	CHD	APPD
01	13.03.15	BKR -SD-	SL -SD-	RG -SD-

REVISED AS PER TANGEDCO COMMENTS DATED 13.02.2015

PROJECT	2X660MW ENNORE SEZ SUPERCRITICAL THERMAL POWER PROJECT AT ASH DYKE OF NCTPS,CHENNAI
OWNER	TAMIL NADU GENERATION & DISTRIBUTION CORPOARATION LIMITED
OWNER'S CONSULTANT	DESEIN PRIVATE LIMITED, DESEIN HOUSE,NEW DELHI
EPC CONTRACTOR	BHARAT HEAVY ELECTRICALS LIMITED POWER SECTOR PROJECT ENGINEERING MANAGEMENT NOIDA(U.P) INDIA

BHARAT HEAVY ELECTRICALS LTD.
POWER SECTOR
PROJECT ENGINEERING MANAGEMENT
NOIDA

DEPT CODE		NAME	SIGN	DATE
E	DRN	BKR		
	DSGN	BKR	-SD-	13.01.15
	CHD	SL	-SD-	13.01.15
	APPD	RG	-SD-	13.01.15

TITLE: BASIC TECHNICAL FEATURES FOR HT/LT MOTORS

DRAWING NO. PE-DC-412-565-E003

SHEET 1 OF 7 REV. 02

1.0 This document covers the basic technical features of high tension (HT) and low tension (LT) squirrel cage induction AC motors employed for driving auxiliaries of BHEL-PEM scope packages in **2 x 660 MW ENNORE SEZ STPP.**

2.0 CODES AND STANDARDS

The motors shall generally conform to IS 325/IEC-60034. LT motors above 10 kW with continuous duty (S1) shall be energy efficient ~~IE2~~ IE3 conforming to IS-12615: 2011.

3.0 DESIGN REQUIREMENTS

3.1 General Requirements

The design ambient temperature shall be 50 deg C.

3.2 Supply system and rated voltage of motors

KW rating	Supply system	Rated voltage of motor
Above 1500 kW	11 KV	11 KV
Above 160 kW up to & including 1500 kW	3.3 KV	3.3 KV
From 200W up to & including 160 kW	415 V	415 V
Below 200W	240V	240V

3.2.1 Supply voltage & variations shall be as follows:-

Voltage variation (AC Supply) (+/-) 10%
Frequency variation (+) 3% to (-) 5%
Combined V & F variation 10% (sum of absolute values)

3.2.2 Motors shall be capable of running continuously at rated output for each of the conditions specified.

3.3 Motor Rating

Motor ratings shall be adequate to meet the requirements of the drive equipment. Motors shall be continuously rated at the design ambient temperature of 50 degree C and relative humidity of 85%. Maximum continuous motor ratings shall have at least a 10% margin above the maximum load demand of the driven equipment under entire operating range including voltage & frequency variation.

3.4 Starting Requirements

3.4.1 Motor shall start smoothly and rapidly. Motor characteristics such as speed, starting torque, break away torque and starting time shall be properly co-ordinated with the requirements of driven equipment. The accelerating torque at any speed with the minimum starting voltage shall be at least 10% of the motor's full load torque.

3.4.2 Motors shall be capable of starting and accelerating the load with direct on line starting without exceeding acceptable winding temperature.

Minimum Starting Voltage requirement for all motors (except mill motors):

1. 85 % of rated voltage for motors up to 1000 kW
2. 80 % of rated voltage for above 1000 kW and up to 4000 kW
3. 75 % of rated voltage for above 4000 kW

3.4.3 The locked rotor current of the HV (11 kV) motors (except MDBFP motors) shall not exceed 650% of full load current inclusive of tolerance as per IS: 325 and for MV (3.3 kV) motors locked rotor current shall not exceed 700% of full load current inclusive of tolerance as per IS: 325. For LT motors (except energy efficient motors) locked rotor current shall not exceed 700% of full load current inclusive of tolerance as per IS: 325. For LT energy efficient motors above 10kW with S1 duty, locked rotor current shall be as per IS: 12615-2011.

3.4.4 The following frequency of starts shall apply to HV (11 kV), MV (3.3 kV) & LT motors

i) Two nos. consecutive cold starts in quick succession with third start after 5 minutes in cold condition.

ii) Two nos. consecutive hot starts in the interval of 15 minutes in hot condition.

3.4.5 Locked motor withstand time of motors under hot condition at highest voltage limit shall be as follows:

a) For motors with starting time up to 20 sec.

- at least 2.5 sec. more than starting time.

b) For motor with starting time above 20 secs but not exceeding 45 secs.

- at least 5.0 sec. more than starting time.

c) For motors with starting time above 45 secs.

- at least 10% more than starting time.

The starting time of the motor referred above is at minimum permissible voltage. For motors and in cases where the above requirements are not complied with, speed switches of approved make & type shall be provided to bypass the locked rotor protection for a pre-selected time during starting of motors. The speed switches shall have one NO & one NC contacts having maximum interrupting capacity of 5 Amps at 240V AC and 0.25 amps at 220 V DC.

3.5 Running Requirements

3.5.1 Motors shall run satisfactorily at a supply voltage of 80% of rated voltage for 5 minutes with full load without injurious heating to the motor.

3.5.2 Pull out torque at rated voltage shall not be less than 205% of full load torque. It shall be 275% for crane duty motors.

3.6 Stress during bus Transfer:

3.6.1 Motors shall withstand the voltage and torque stress developed due to the application of 150% of the rated voltage for at least 1 sec. caused due to vector difference between the motor residual voltage and the incoming supply voltage during occasional auto bus transfer.

3.6.2 Motor windings shall be adequately braced to satisfactorily withstand the mech. Stresses during above condition.

3.6.3 Motors shall be capable of withstanding heavy in-rush transient current caused by bus transfer without damage.

3.6.4 Motor and driven eqpt. Shafts shall be adequately sized to satisfactorily withstand transient torque under above condition.

3.7 Noise level

The maximum noise level for motors shall be in line with IS 12065.

3.8 Vibration

The maximum vibration for motors shall be in line with IS: 12075.

3.9 Crane duty motors will be of squirrel cage induction motor and shall suit the duty class S4, cyclic duration factor 40% and 300 starts. Crane duty motors shall be provided with VVFD for speed control.

1

4.0 CONSTRUCTIONAL FEATURES

4.1 Degree of Protection

4.1.1 Indoor motors shall conform to degree of protection IP: 54 as per IS: 4691. Outdoor motors shall conform to degree of protection IP: 55 as per IS: 4691 and shall be of weather-proof construction. Canopy shall be provided for outdoor motors. CW motors (in case of screen prot. Drip proof) shall conform to degree of protection IP: 23 as per IS: 4691. The degree of protection for terminal boxes shall be IP 55 for outdoor area & IP 54 for indoor area as per IS 4691.

4.1.2 The stator laminations shall made from suitable silicon steel/magnetic steel sheet varnished on both sides and pressed to form a rigid core.

4.1.3 The rotor shall be of rigid cage construction with die cast aluminium / copper alloy / copper bars firmly wedged in bar slots and brazed to the end rings. The rotor cage shall be designed to operate satisfactorily under respective starting and load duty cycle.

4.2 Enclosure and Cooling

4.2.1 Motors shall generally have totally enclosed fan cooled (TEFC) or totally enclosed tube ventilated (TETV) enclosures or Closed Air circuit Air (CACA), the method of cooling conforming to IC-0141 or IC-0151 or IC-0161 of IS: 6362 up to 3000 kW motor. CW Motors may be screen protected drip proof (SPDP).

4.2.2 Motors shall not be provided with any electric or pneumatic operated external fan for cooling the motors.

4.2.3 Frames shall be designed to avoid collection of moisture and all enclosures shall be provided with facility for drainage at the lowest point.

4.3 Class of Insulation

HV/MV/LT motors shall have class F insulation. The temperature rise of all motors shall be limited to the limits applicable to Class 'B' insulation. In case of continuous operation at extreme voltage limits, 10deg C rise above the temperature limits specified in IS: 325 shall be permissible.

4.4 Bearings

4.4.1 Horizontally mounted motors shall have grease lubricated ball/roller or sleeve bearings. For HV/MV motors, the bearings shall be regreasable type and for LV motors, these bearings can be either sealed life lubricated type or regreasable type as per manufacturer's standard.

4.4.2 The vertical motors shall have a combined thrust and guide bearing on top and guide bearing at bottom. If the ball or roller bearings can take vertical thrust, thrust and guide bearing need not be provided.

4.4.3 After taking all motor driven equipment loads and thrust (if any) into account, the bearings shall be suitable for min. 20,000 working hours. Re-greasable bearings shall be provided with grease nipples and relief holes for on-line re-greasing and shall be suitable for 8000 working hours without changing of the grease.

4.4.4 The bearings of solidly coupled motors shall be of the same type as those of the driven equipment.

4.4.5 For motors below 15 kW shall be provided with sealed ZZ bearing.

4.4.6 Motors rated above 1000kW shall be provided with insulated end shield on non-driving end to prevent flow of shaft current.

4.5 Terminals and Terminal Boxes

4.5.1 Motors of rating 90 kW and up to 160kW will be controlled by air circuit breaker with numerical protection. For all motors of rating up to 90kW shall be provided with MCCBs. The terminal box of motors for HV (11 kV), MV (3.3 kV) & LT motors shall be designed for the maximum fault current for a duration of at least 0.25 secs. 11kV & 3.3kV motors terminals shall be able to withstand 44kA for 0.25 seconds.

1

4.5.2 Unless otherwise specified or approved, phase terminal boxes of horizontal motors shall be positioned on the left hand side of the motor when viewed from the non-driving end.

4.5.3 For HV/MV motors, the main terminal box shall be of phase-segregated type with clamping arrangement for the terminals.

4.5.4 Connections shall be such that when the supply leads R, Y & B are connected to motor terminals A B & C or U, V & W respectively, motor shall rotate in an anticlockwise direction when viewed from the non-driving end. Where such motors require clockwise rotation, the supply leads R, Y, B will be connected to motor terminals A,C,B or V, W & U respectively.

4.5.5 Permanently attached diagram and instruction plate made preferably of stainless steel shall be mounted inside terminal box cover giving the connection diagram for the desired direction of rotation and reverse rotation.

4.5.6 Motor terminals and terminal leads shall be fully insulated with no bar live parts.

4.5.7 Separate terminal boxes shall be provided for space heaters and temp. Indicators. If this is not possible in case of LT motors, the space heater terminals shall be adequately segregated from the main terminals in the main terminal box. Detachable gland plates of thickness 3 mm (hot/cold rolled sheet steel) or 4 mm (non-magnetic material for single core cables) with double compression tinned brass glands shall be provided in terminal boxes.

4.5.8 Phase terminal boxes shall be suitable for 360 degree of rotation in steps of 180 and 90 degree for HT and LT motors respectively.

4.5.9 Cable glands and cable lugs as per selected cable sizes shall be provided in line with cable erection philosophy. For single core cable termination, gland plates shall be of non-magnetic material.

4.6 Grounding

Two separate earthing terminals suitable for connecting G.I. strip grounding conductor shall be provided on opposite sides of motor frame. Each terminal box shall have a grounding terminal.

4.7 General

4.7.1 Motors provided for similar drives shall be interchangeable.

4.7.2 An arrow block shall be screwed on the body of the motors on the non-driving end to indicate the direction of rotation of the motors.

4.7.3 Motors for Fuel oil unloading and drain oil pumps located in hazardous areas shall be with flame-proof enclosures in accordance with IS 2148 / IEC 60079.

a) Fuel oil area: Group - IIB.

b) Hydrogen generation plant area: Group - IIC

4.8 Neutral terminal box of motors rated 1000kW and above shall provision of mounting Neutral CTs of PS class identical to the CTs to be provided at switchgear end. Further the neutral terminals of HV motors rated below 1000kW shall be accessible. 1

5.0 ACCESSORIES

5.1 SPACE HEATERS

All motors rated 30KW and above shall be provided with space heaters to maintain the motor internal air temperature above the dew point. Space heaters shall be suitable for a supply of 240V AC, single phase, 50 Hz.

The leads from space heaters of each motor shall be brought out to a separate terminal Box. Space heaters shall be mounted inside the motor in accessible places so that their removal and replacement is simple.

5.2 RESISTANCE TEMPERATURE DETECTORS (RTDs)

5.2.1 HV/MV motors stator windings shall be provided with 12 nos. Simplex 3 wire Platinum RTDs with 100 ohms resistance at 0 deg C for remote monitoring of winding temperature. The leads from RTDs of each motor shall be brought out to a separate terminal Box.

5.2.2 For HV/MV motors, each bearing shall be provided with 1 no. Duplex 3 wire Platinum RTDs with 100 ohms resistance at 0 deg C for remote monitoring of bearing temperature. The leads from these RTDs shall be brought out to a separate terminal Box or the terminal box same as for winding RTDs.

5.3 DIAL TYPE TEMP. INDICATORS

5.3.1 For HV/MV motors, each bearing shall be provided with dial type thermometer with adjustable alarm contact and resistance type temperature detector. The indicators shall have 2 nos. NO contacts rated for 5A, 240 V AC and 0.5 A, 220 V DC for alarm/trip purpose.

5.4 Vibration monitoring pads

5.4.1 Provision shall be made in all HV/MV motors for mounting vibration detectors.

6.0 NAME PLATE

Motors shall have stainless steel name plate with all particulars as per IS: 325. In addition bearing identification number and type of lubricant is to be indicated.

7.0 PAINTING

Motor including fan shall be painted with corrosion proof paints of colour shade Siemens grey (RAL 7032).

8.0 TESTING

8.1 Type Tests

For HT & LT Motors, type test reports for type tests as per IS: 325/ IS: 12615 conducted on equipment similar to those proposed to be supplied and carried out within last five years shall be submitted. However, if such reports are not available, one motor of each type shall be subjected to type tests for free of cost.

8.2 Routine Tests

All motors shall be subjected to routine tests as per IS: 325/ IS: 12615 in the presence of customer or customer representative.

MOTOR DATA SHEET-A

SPECIFIC ELECTRICAL REQUIREMENT

SL.NO.	PARAMETERS	UNIT	ENNORE
	MOTOR		
1	DESIGN AMBIENT TEMP	DEG. C	50
2	VOLTAGE SUPPLY AND VARIATION	VOLT	415V, ± 10%
3	FREQUENCY WITH VARIATION	Hz	50 (+) 3% to (-) 5%
4	COMBINED VOLTAGE & FREQUENCY VARIATION		10%
5	MAX ACCEPTABLE RATING OF MOTOR AT 415 V	KW	160 kW
6	SYSTEM FAULT LEVEL AND ITS DUARTION	KA	50 KA, 1 Sec
7	SUTABILITY OF TERMINAL BOX FOR FAULT LEVEL AND DURATION		50 KA, 0.25 sec
8	CLASS OF INSULATION & TEMP RISE LIMITED TO		Class-F and temp rise limited to Class-B
9	MIN. STARTING VOLTAGE		85%
10	MOTOR RATING FOR SINGLE PHASE SUPPLY		Upto 200W
11	MAXIMUM LOCKED ROTOR CURRENT	% OF FLC	For LT motors (except energy efficient motors) locked rotor current shall not exceed 700% of full load current inclusive of tolerance as per IS: 325. For LT energy efficient motors above 10kW with S1 duty, locked rotor current shall be as per IS: 12615-2011.
12	ACCEPTABLE NOISE LEVEL	DB	85dB at 1.0m in line with IS 12065
13	TYPE OF STARTER PROVIDED IN MCC		DOL
14	DOP OF ENCLOSURE		Indoor motors shall conform to degree of protection IP: 54 as per IS: 4691. Outdoor motors shall conform to degree of protection IP: 55 as per IS: 4691 and shall be of weather-proof construction. The degree of protection for terminal boxes shall be IP 55 for outdoor area & IP 54 for indoor area as per IS 4691.
15	SPACE HEATER REQUIREMENT		30KW & ABOVE
16	PAINT SHADE		Shall be confirmed during detailed engineering.
17	SPECIAL REQUIREMENT		For HT & LT Motors, type test reports for type tests as per IS: 325/ IS: 12615 conducted on equipment similar to those proposed to be supplied and carried out within last five years shall be submitted. However, if such reports are not available, one motor of each type shall be subjected to type tests for free of cost. All motors shall be subjected to routine tests as per IS: 325 / IS: 12615. The motors shall generally conform to IS: 325 / IEC-60034.

MOTOR DATA SHEET-C

S. No.	Description	Data to be filled by successful bidder
A.	**General**	
1	Manufacturer & country of origin	
2	Motor type	
3	Type of starting	
4	Name of the equipment driven by motor & Quantity	
5	Maximum Power requirement of driven equipment	
6	Rated speed of Driven Equipment	
7	Design ambient temperature	
B.	**Design and Performance Data**	
1	Frame size & type designation	
2	Type of duty	
3	Rated Voltage	
4	Permissible variation for	
5	a Voltage	
6	b Frequency	
7	c) Combined voltage & frequency	
8	Rated output at design ambient temp (by resistance method)	
9	Synchronous speed & Rated slip	
10	Minimum permissible starting voltage	
11	Starting time in sec with mechanism coupled	
12	a) At rated voltage	
13	b) At min starting voltage	
14	Locked rotor current as percentage of FLC (including IS tolerance)	
15	Torque	
	a) Starting	
	b) Maximum	
16	Permissible temp rise at rated output over ambient temp & method	
17	Noise level at 1.0 m (dB	
18	Amplitude of vibration	
19	Efficiency & P.F. at rated voltage & frequency	
	a) At 100% load	
	c) At 75% load	

S. No.	Description	Data to be filled by successful bidder
	c) At starting	
C.	**Constructional Features**	
1	Method of connection of motor driven equipment	
2	Applicable Standard	
3	DOP of Enclosure	
4	Method of cooling	
5	Class of insulation	
6	Main terminal box	
	a) Type	
	b) Power Cable details (Conductor, size, armour/unarmour)	
	c) Cable Gland & lugs details (Size, type & material)	
	d) Permissible Fault level (kArms & duration in sec)	
7	Space heater details (Voltage & watts)	
8	Flame proof motor details (if applicable)	
	a) Enclosure	
	b) suitability for hazardous area	
	i Zone	O / I / II
	ii Group	IIA / IIB / IIC
9	No. of Stator winding	
10	Winding connection	
11	Kind of rotor winding	
12	Kind of bearings	
13	Direction of rotation when viewed from NDE	
14	Paint Shade & type	
15	Net weight of motor	
16	Outline mounting drawing No (To be enclosed as annexure)	
D.	**Characteristic curves/ drawings** (To be enclosed for motors of rating ≥ 55KW)	
	a) Torque speed characteristic	
	b) Thermal withstand characteristic	
	c) Current vs time	
	d) Speed vs time	

QUALITY PLAN FOR AC MOTORS

	QUALITY PLAN	CUSTOMER :	PROJECT TITLE	SPECIFICATION : NUMBER :
		BIDDER/ VENDOR :	QUALITY PLAN NUMBER PED-506-00-Q-006, REV-01	SPECIFICATION TITLE
	SHEET 1 OF 2	SYSTEM	ITEM AC ELECT. MOTORS BELOW 55KW (LV)	SECTION VOLUME III

SL. NO.	COMPONENT/OPERATION	CHARACTERISTICS CHECK	CAT.	TYPE/ METHOD OF CHECK	EXTENT OF CHECK	REFERENCE DOCUMENT	ACCEPTANCE NORM	FORMAT OF RECORD	AGENCY P	AGENCY W	AGENCY V	REMARKS
1	2	3	4	5	6	7	8	9	10			11
1.0	ASSEMBLY	1.WORKMANSHIP	MA	VISUAL	100%	MANUF'S SPEC	MANUF'S SPEC	-DO-	2	-	-	
		2.DIMENSIONS	MA	-DO-	-DO-	MFG. DRG./ MFG. SPEC.	MFG. DRG./ MFG. SPEC.	-DO-	2	-	-	
		3.CORRECTNESS COMPLETENESS TERMINATIONS/ MARKING/COLOUR CODE	MA	VISUAL	100%	MFG.SPEC./ RELEVANT IS	MFG.SPEC. RELEVANT IS	-DO-	2	-	-	
2.0	PAINTING	1.SHADE	MA	VISUAL	SAMPLE	MANUFR'S SPEC/BHEL SPEC./RELEVANT STANDARD	BHEL SPEC. SAME AS COL.7	LOG BOOK	2	-	-	
3.0	TESTS	1.ROUTINE TEST INCLUDING SPECIAL TEST AS PER BHEL SPEC.	MA	-DO-	100%	IS-325/ BHEL SPEC./ DATA SHEET	SAME AS COL.7	TEST REPORT	2	1		NOTE -1 & NOTE-3
		2.OVERALL DIMENSIONS & ORIENTATION	MA	MEASUREMENT & VISUAL	100%	APPROVED DRG/DATA SHEET	APPROVED DRG/DATA SHEET & RELEVANT IS	INSPN. REPORT	2	1	-	NOTE -1 & NOTE-3

BHEL	PARTICULARS	BIDDER/VENDOR
	NAME	
	SIGNATURE	

	QUALITY PLAN	CUSTOMER :	PROJECT TITLE	SPECIFICATION : NUMBER :
		BIDDER/ VENDOR :	QUALITY PLAN NUMBER PED-506-00-Q-006, REV-01	SPECIFICATION : TITLE :
	SHEET 2 OF 2	SYSTEM	ITEM AC ELECT. MOTORS BELOW 55KW (LV)	SECTION VOLUME III

SL. NO.	COMPONENT/OPERATION	CHARACTERISTICS CHECK	CAT.	TYPE/ METHOD OF CHECK	EXTENT OF CHECK	REFERENCE DOCUMENT	ACCEPTANCE NORM	FORMAT OF RECORD	AGENCY P	AGENCY W	AGENCY V	REMARKS
1	2	3	4	5	6	7	8	9	10	10	10	11
		3.NAMEPLATE DETAILS	MA	VISUAL	100%	IS-325 & DATA SHEET	IS-325 & DATA SHEET	INSPN. REPORT	2	1	-	

NOTES:

1 ROUTINE TESTS ON 100% MOTORS SHALL BE DONE BY THE VENDOR. HOWEVER, BHEL SHALL WITNESS ROUTINE TESTS ON RANDOM SAMPLES. THE SAMPLING PLAN SHALL BE MUTUALLY AGREED UPON

2 WHERE EVER CUSTOMER IS INVOLVED IN INSPECTION, (1) SHALL MEAN BHEL AND CUSTOMERS BOTH TOGETHER.

3 FOR EXHAUST/VENTILATION FAN MOTORS OF RATING UPTO 1.5KW , ONLY ROUTINE TEST CERTIFICATES SHALL BE FURNISHED FOR SCRUTINY.

Legends for Inspection agency

1. BHEL/CUSTOMER
2. VENDOR (MOTOR MANUFACTURER)
3. SUB-VENDOR (RAW MATERIAL/COMPONENTS SUPPLIER)

P. PERFORM
W. WITNESS
V. VERIFY

BHEL	PARTICULARS	BIDDER/VENDOR	
	NAME		
	SIGNATURE		
	DATE		BIDDER'S/VENDORS COMPANY SEAL

	QUALITY PLAN		CUSTOMER :			PROJECT TITLE			SPECIFICATION : NUMBER :			
			BIDDER/ VENDOR :			QUALITY PLAN NUMBER PED-506-00-Q-007, REV-03			SPECIFICATION : TITLE			
	SHEET 1 OF 9		SYSTEM			ITEM: AC ELECT. MOTORS 55 KW & ABOVE (LV & MV)			SECTION			VOLUME III
SL. NO.	COMPONENT/OPERATION	CHARACTERISTIC CHECK	CAT.	TYPE/ METHOD OF CHECK	EXTENT OF CHECK	REFERENCE DOCUMENT	ACCEPTANCE NORM	FORMAT OF RECORD	AGENCY P	W	V	REMARKS
1	2	3	4	5	6	7	8	9	10			11
1.0	RAW MATERIAL & BOUGHT OUT CONTROL											
1.1	SHEET STEEL, PLATES, SECTION, EYEBOLTS	1.SURFACE CONDITION	MA	VISUAL	100%	-	FREE FROM BLINKS, CRACKS, WAVINESS ETC	LOG BOOK	3	-	-	
		2.DIMENSIONS	MA	MEASUREMENT	SAMPLE	MANFR'S DRG./SPEC	MANFR'S DRG./SPEC	-DO-	3	-	-	
		3.PROOF LOAD TEST (EYE BOLT)	MA	MECH. TEST	-DO-	-DO-	-DO-	INSPEC. REPORT	3	-	2	
1.2	HARDWARES	1.SURFACE CONDITION	MA	VISUAL	100%		FREE FROM CRACKS, UN-EVENNESS ETC.	-DO-	3	-	-	
		2.PROPERTY CLASS	MA	VISUAL	SAMPLES	MANFR'S DRG./SPEC BOOK	RELEVENT IS/SPEC.	SUPPLIERS TC & LOG	3	-	2	PROPERTY CLASS MARKING SHALL BE CHECKED BY THE VENDOR
1.3	CASTING	1.SURFACE CONDITION	MA	VISUAL	100%		FREE FROM CRACKS, BLOW HOLES ETC.	LOG BOOK	3	-	2	
		2.CHEM. & PHY. PROP.	MA	CHEM & MECH TEST	1/HEAT NO.	MANFR'S DRG./SPEC	RELEVENT IS/	SUPPLIER'S TC	3	-	2	HEAT NO. SHALL BE VERIFIED
		3.DIMENSIONS	MA	MEASUREMENT	100%	MANUFR'S DRG.	MANUFR'S DRG.	LOG BOOK	3	-	2	
1.4	PAINT & VARNISH	1.MAKE, SHADE, SHELF LIFE & TYPE	MA	VISUAL	100% CONTINUOUS	MANFR'S DRG./SPEC	MANFR'S DRG./SPEC	LOG BOOK	3	-	2	
BHEL			**PARTICULARS**		**BIDDER/VENDOR**							
			NAME									
			SIGNATURE									
			DATE						BIDDER'S/VENDORS COMPANY SEAL			

	QUALITY PLAN		CUSTOMER :			PROJECT TITLE			SPECIFICATION : NUMBER :			
			BIDDER/ : VENDOR			QUALITY PLAN NUMBER PED-506-00-Q-007, REV-03			SPECIFICATION : TITLE			
	SHEET 2 OF 9		SYSTEM			ITEM: AC ELECT. MOTORS 55 KW & ABOVE (LV & MV)			SECTION			VOLUME III
SL. NO.	COMPONENT/OPERATION	CHARACTERISTIC CHECK	CAT.	TYPE/ METHOD OF CHECK	EXTENT OF CHECK	REFERENCE DOCUMENT	ACCEPTANCE NORM	FORMAT OF RECORD	AGENCY			REMARKS
									P	**W**	**V**	
1	**2**	**3**	**4**	**5**	**6**	**7**	**8**	**9**	**10**			**11**
1.5	SHAFT (FORGED OR ROLLED)	1. SURFACE COND.	MA	VISUAL	100%	-	FREE FROM VISUAL DEFECTS	-DO-	3	-	-	VENDOR'S APPROVAL IDENTIFICATION SHALL BE MAINTAINED
		2. CHEM. & PHYSICAL PROPERTIES	MA	CHEM. & PHYSICAL TESTS	1/HEAT NO. OR HEAT TREATMENT BATCH NO	MFG. DRG. SPEC.	RELEVANT IS	SUPPLIER'S TC	3	-	2	
		3. DIMENSIONS	MA	MEASUREMENT	100%	-DO-	MANUFR'S DRG.	LOG BOOK	3	-	2	
		4.INTERNAL FLAWS	CR	UT	-DO-	ASTM-A388	MANUFR'S SPEC. BHEL SPEC.	-DO-	3	2	1	FOR DIA OF 55 MM & ABOVE
1.6	SPACE HEATERS, CONNEC-TORS, TERMINAL BLOCKS, CABLES, CABLE LUGS, CARBON BRUSH TEMP. DETECTORS, RTD, BTD'S	1. MAKE & RATING	MA	VISUAL	-DO-	MANUFR'S DRG. SPEC.	MANUFR'S DRG. SPEC.	-DO-	3	-	2	
		2. PHYSICAL COND.	MA	-DO-	-DO-	-	NO PHYS. DAMAGE, NO ELECTRICAL DISCONTINUITY	-DO-	3	-	2	
		3.DIMENSIONS (WHEREVER APPLICABLE)	MA	MEASUREMENT	SAMPLE	MANUFR'S DRG./ SPEC.	MANUFR'S DRG. / SPEC.	-DO-	3	-	2	
		4.PERFORMANCE/ CALIBRATION	MA	TEST	100%	-DO-	-DO-	INSP. REPORT	3	-	2	

BHEL	**PARTICULARS**	**BIDDER/VENDOR**	
	NAME		
	SIGNATURE		
	DATE		BIDDER'S/VENDORS COMPANY SEAL

	QUALITY PLAN		CUSTOMER :			PROJECT TITLE			SPECIFICATION : NUMBER :			
			BIDDER/ VENDOR :			QUALITY PLAN NUMBER PED-506-00-Q-007, REV-03			SPECIFICATION : TITLE			
	SHEET 3 OF 9		SYSTEM			ITEM: AC ELECT. MOTORS 55 KW & ABOVE (LV & MV)			SECTION			VOLUME III
SL. NO.	COMPONENT/OPERATION	CHARACTERISTIC CHECK	CAT.	TYPE/ METHOD OF CHECK	EXTENT OF CHECK	REFERENCE DOCUMENT	ACCEPTANCE NORM	FORMAT OF RECORD	AGENCY P	W	V	REMARKS
1	2	3	4	5	6	7	8	9	10			11
1.7	OTHER INSULATING MATERIALS LIKE SLEEVES, BINDINGS CORDS, PAPERS, PRESS BOARDS ETC.	1. SURFACE COND. ETC.	MA	VISUAL	100%	-	NO VISUAL DEFECTS	INSPT. REPORT	3	-	2	
		2. OTHER CHARACTERISTICS	MA	TEST	SAMPLE	MANUF'S SPEC.	MANUF'S SPEC.	LOG BOOK AND OR SUPPLIER'S TC	3	-	2	
1.8	SHEET STAMPING (PUNCHED)	1. SURFACE COND.	MA	VISUAL	100%	-	NO VISUAL DEFECTS (FREE FROM BURS)	LOG BOOK	3	-	-	
		2.DIMENSIONS INCLUDING BURS HEIGHT	MA	MEASUREMENT	SAMPLE	MANUFR'S DRG. .	MANUFR'S DRG.	-DO-	3	-	2	FOR MV MOTOR INSULA-TION/VARNISH THICKNESS SHALL BE MORE THAN THE BURS HEIGHT
		3. ACCEPTANCE TESTS	MA	ELECT. & MECH TESTS	-DO-	MANUF'S SPEC./ RELEVANT IS	RELEVANT IS	SUPPLIER'S TC	3	-	2	
1.9	CONDUCTORS	1. SURFACE FINISH	MA	VISUAL	100%	-	FREE FROM VISUAL DEFECTS	LOG BOOK	3*	-	2*	* MOTOR MANUFACTURER TO CONDUCT VISUAL CHECK FOR SURFACE FINISH ON RANDOM BASIS (10% SAMPLE) AT HIS WORKS AND MAINTAIN RECORD FOR VERIFICATION BY BHEL/CUSTOMER.
		2.ELECT. PROP, & MECH. PROP	MA	ELECT. & MECH.TEST	SAMPLES	RELEVANT IS/ BS OR OTHER STANDARDS	RELEVANT IS/ BS OR OTHER STANDARDS	SUPPLIERS TC & VENDOR'S INSPN. REPORTS	3	-	2	

BHEL	**PARTICULARS**	**BIDDER/VENDOR**	
	NAME		
	SIGNATURE		
	DATE		BIDDER'S/VENDORS COMPANY SEAL

	QUALITY PLAN		CUSTOMER :			PROJECT TITLE			SPECIFICATION : NUMBER :			
			BIDDER/ : VENDOR			QUALITY PLAN NUMBER PED-506-00-Q-007, REV-03			SPECIFICATION : TITLE			
	SHEET 4 OF 9		SYSTEM			ITEM: AC ELECT. MOTORS 55 KW & ABOVE (LV & MV)			SECTION			VOLUME III
SL. NO.	COMPONENT/OPERATION	CHARACTERISTIC CHECK	CAT.	TYPE/ METHOD OF CHECK	EXTENT OF CHECK	REFERENCE DOCUMENT	ACCEPTANCE NORM	FORMAT OF RECORD	AGENCY P	 W	 V	REMARKS
1	**2**	**3**	**4**	**5**	**6**	**7**	**8**	**9**	**10**			**11**
		3.DIMENSIONS	MA	MEASUREMENT	-DO-	-DO-	-DO-	Log Book	3	-	2	
1.10	BEARINGS	1.MAKE & TYPE	MA	VISUAL	100%	MANFR'S DRG./ APPROVED DATASHEET	MANFR'S DRG./ APPROVED DATASHEET	-DO-	3	-	2	
		2.DIMENSIONS	MA	MEASUREMENT	SAMPLE	BHEL DATA SHEET	BHEL DATA SHEET BEARING MANUF'S CATALOGUES	-DO-	3	-	2	
		3.SURFACE FINISH	MA	VISUAL	100%	-	FREE FROM VISUAL DEFECTS	-DO-	3	-	2	
1.11	SLIP RING (WHEREVER APPLICABLE)	1.SURFACE COND.	MA	VISUAL	100%	-	-DO-	-DO-	3	-	-	
		2.DIMENSIONS	MA	MEASUREMENT	SAMPLE	MANUF'S DRG	MANUF'S DRG	-DO-	3	-	-	
		3.TEMP.WITH-STAND CAPACITY	MA	ELECT.TEST	-DO-	MANUF'S SPEC./ BHEL SPEC.	MANUF'S SPEC./ BHEL SPEC.	-DO-	3	-	2	
		4.HV/IR	MA	-DO-	100%	-DO-	-DO-	-DO-	3	-	2	
1.12	OIL SEALS & GASKETS	1.MATERIAL OF GASKET	MA	VISUAL	100%	MANUF'S DRG/SPECS	MANUF'S DRG./ SPECS.	-DO-	3	-	-	
		2.SURFACE COND.	MA	VISUAL	100%	-	FREE FROM VISUAL DEFECTS	-DO-	3	-	-	
		3.DIMENSIONS	MA	MEASUREMENT	SAMPLE	MANUF'S DRG	MANUF'S DRG	-DO-	3	-	-	

BHEL	**PARTICULARS**	**BIDDER/VENDOR**	
	NAME		
	SIGNATURE		
	DATE		BIDDER'S/VENDORS COMPANY SEAL

	QUALITY PLAN	CUSTOMER :			PROJECT TITLE			SPECIFICATION : NUMBER :			
		BIDDER/ : VENDOR			QUALITY PLAN NUMBER PED-506-00-Q-007, REV-03			SPECIFICATION : TITLE			
	SHEET 5 OF 9	SYSTEM			ITEM: AC ELECT. MOTORS 55 KW & ABOVE (LV & MV)			SECTION			VOLUME III
SL. NO.	COMPONENT/OPERATION	CHARACTERISTIC CHECK	CAT.	TYPE/ METHOD OF CHECK	EXTENT OF CHECK	REFERENCE DOCUMENT	ACCEPTANCE NORM	FORMAT OF RECORD	AGENCY P	AGENCY W	AGENCY V	REMARKS
1	2	3	4	5	6	7	8	9	10			11
2.0	IN PROCESS											
2.1	STATOR FRAME WELDING (IN CASE OF FABRICATED STATOR)	1.WORKMANSHIP & CLEANNESS	MA	VISUAL	100%	-DO-	GOOD FINISH	LOG BOOK	3/2	2	-	
		2.DIMENSIONS	MA	MEASUREMENT	-DO-	MANUF'S DRG	MANUF'S DRG	-DO-	2	-	-	
2.2	MACHINING	1.FINISH	MA	VISUAL	100%	-DO-	GOOD FINISH	LOG BOOK	2	-	-	
		2.DIMENSIONS	MA	MEASUREMENT	-DO-	MANUF'S DRG	MANUF'S DRG	-DO-	2	-	-	
		3.SHAFT SURFACE FLOWS	MA	PT	-DO-	RELEVENT SPEC./ ASTM-E165	MANUFR'S SPEC./ BHEL SPEC./	-DO-	2	-	1	
2.3	PAINTING	1.SURFACE PREPARATION	MA	VISUAL	100%	MANFR'S SPEC/BHEL SPEC./ RELEVANT STAND	BHEL SPEC. SAME AS COL.7	LOG BOOK	2	-	-	
		2.PAINT THICKNESS (BOTH PRIMER & FINISH COAT)	MA	MEASUREMENT BY ELCOMETER	SAMPLE	-DO-	-DO-	-DO-	2	-	-	
		3.SHADE	MA	VISUAL	-DO-	-DO-	-DO-	Log Book	2	-	-	
		4.ADHESION	MA	CROSS CUTTING & TAPE TEST	-DO-	-DO-	-DO-	Log Book	2	-	-	

BHEL	**PARTICULARS**	**BIDDER/VENDOR**	
	NAME		
	SIGNATURE		
	DATE		BIDDER'S/VENDORS COMPANY SEAL

		QUALITY PLAN	CUSTOMER :			PROJECT TITLE			SPECIFICATION : NUMBER :			
			BIDDER/ VENDOR :			QUALITY PLAN NUMBER PED-506-00-Q-007, REV-03			SPECIFICATION : TITLE			
		SHEET 6 OF 9	SYSTEM			ITEM: AC ELECT. MOTORS 55 KW & ABOVE (LV & MV)			SECTION			VOLUME III
SL. NO.	COMPONENT/OPERATION	CHARACTERISTIC CHECK	CAT.	TYPE/ METHOD OF CHECK	EXTENT OF CHECK	REFERENCE DOCUMENT	ACCEPTANCE NORM	FORMAT OF RECORD	AGENCY P	W	V	REMARKS
1	2	3	4	5	6	7	8	9	10			11
2.4	SHEET STACKING	1.COMPLETENESS	MA	MEASUREMENT	SAMPLE	MANUFR'S SPEC.	MANUFR'S SPEC.	Log Book	2	-	-	
		2.COMPRESSION & TIGHTENING	MA	MEASUREMENT	100%	-DO-	-DO-	Log Book	2	-	-	
		3.CORE LOSS & HOTSPOT	MA	ELECT.TEST	-DO-	-DO-	-DO-	Log Book	2	1*	1	(FOR MOTORS OF 2MW AND ABOVE) * ON 10% RANDOM SAMPLE
2.5	WINDING	1.COMPLETENESS	CR	VISUAL	100%	MANUFR'S SPEC./BHEL SPEC.	MANUFR'S SPEC./BHEL SPEC.	Log Book	2	-	-	
		2.CLEANLINESS	CR	-DO-	-DO-	-DO-	-DO-	Log Book	2	-	-	
		3.IR-HV-IR	CR	ELECT. TEST	-DO-	-DO-	-DO-	Log Book	2	-	1	
		4.RESISTANCE	CR	-DO-	-DO-	-DO-	-DO-	Log Book	2	-	1	
		5.INTERTURN INSULATION	CR	-DO-	-DO-	-DO-	-DO-	Log Book	2	-	-	
		6.SURGE WITH STAND AND TAN. DELTA TEST	CR	-DO-	-DO-	-DO-	-DO-	Log Book	2	-	1	FOR MV MOTOR
2.6	IMPREGNATION	1.VISCOSCITY	MA	PHY. TEST	AT STARTING	-DO-	-DO-	Log Book	2	-	-	
		2.TEMP. PRESSURE VACCUM	MA	PROCESS CHECK	CONTINUOUS	-DO-	-DO-	Log Book	2	-	-	
		3.NO. OF DIPS	MA	-DO-	-DO-	-DO-	-DO-	Log Book	2	-	1	THREE DIPS TO BE GIVEN

BHEL	**PARTICULARS**	**BIDDER/VENDOR**	
	NAME		
	SIGNATURE		
	DATE		BIDDER'S/VENDORS COMPANY SEAL

	QUALITY PLAN		CUSTOMER :			PROJECT TITLE			SPECIFICATION : NUMBER :			
			BIDDER/ : VENDOR			QUALITY PLAN NUMBER PED-506-00-Q-007, REV-03			SPECIFICATION : TITLE			
	SHEET 7 OF 9		SYSTEM			ITEM: AC ELECT. MOTORS 55 KW & ABOVE (LV & MV)			SECTION			VOLUME III
SL. NO.	COMPONENT/OPERATION	CHARACTERISTIC CHECK	CAT.	TYPE/ METHOD OF CHECK	EXTENT OF CHECK	REFERENCE DOCUMENT	ACCEPTANCE NORM	FORMAT OF RECORD	AGENCY			REMARKS
									P	**W**	**V**	
1	**2**	**3**	**4**	**5**	**6**	**7**	**8**	**9**	**10**			**11**
		4.DURATION	MA	-DO-	-DO-	-DO-	-DO-	Log Book	2	-	1	
2.7	COMPLETE STATOR ASSEMBLY	1.COMPACTNESS & CLEANLINESS	MA	VISUAL	100%	-DO-	-DO-	Log Book	2	-	-	
2.8	BRAZING/COMPRESSION JOINT	1.COMPLETENESS	CR	-DO-	-DO-	-DO-	-DO-	Log Book	2	-	-	
		2.SOUNDNESS	CR	MALLET TEST & UT	-DO-	-DO-	-DO-	Log Book	2		1	
		3.HV	MA	ELECT. TEST	-DO-	-DO-	-DO-	Log Book	2		1	
2.9	COMPLETE ROTOR ASSEMBLY	1.RESIDUAL UNBALANCE	CR	DYN. BALANCE	-DO-	MFG SPEC./ ISO 1940	MFG. DWG.	Log Book	2		1	VERIFICATION FOR MV MOTOR ONLY
		2.SOUNDNESS OF DIE CASTING	CR	ELECT. (GROWLER TEST)	-DO-	MFG. SPEC.	MFG. SPEC.	Log Book	2		1	
2.10	ASSEMBLY	1.ALIGNMENT	MA	MEAS.	-DO-	-DO-	-DO-	Log Book	2	-	-	
		2.WORKMANSHIP	MA	VISUAL	-DO-	-DO-	-DO-	Log Book	2	-	-	
		3.AXIAL PLAY	MA	MEAS.	-DO-	-DO-	-DO-	Log Book	2	-	1	
		4.DIMENSIONS	MA	-DO-	-DO-	MFG.DRG./ MFG SPEC.	MFG. DRG/ RELEVANT IS	Log Book	2	-	-	
		5.CORRECTNESS, COMPLETENESS TERMINATIONS/ MARKING/ COLOUR CODE	MA	VISUAL	100%	MFG SPEC. RELEVANT IS	MFG SPEC. RELEVANT IS	Log Book	2	-	-	
		6. RTD, BTD & SPACE HEATER MOUNTING.	MA	VISUAL	100%	MFG SPEC. RELEVANT IS	MFG SPEC. RELEVANT IS	Log Book	2		1	

BHEL	**PARTICULARS**	**BIDDER/VENDOR**	
	NAME		
	SIGNATURE		
	DATE		BIDDER'S/VENDORS COMPANY SEAL

	QUALITY PLAN		CUSTOMER :			PROJECT TITLE			SPECIFICATION : NUMBER :			
			BIDDER/ : VENDOR			QUALITY PLAN NUMBER PED-506-00-Q-007, REV-03			SPECIFICATION : TITLE			
	SHEET 8 OF 9		SYSTEM			ITEM: AC ELECT. MOTORS 55 KW & ABOVE (LV & MV)			SECTION			VOLUME III
SL. NO.	COMPONENT/OPERATION	CHARACTERISTIC CHECK	CAT.	TYPE/ METHOD OF CHECK	EXTENT OF CHECK	REFERENCE DOCUMENT	ACCEPTANCE NORM	FORMAT OF RECORD	AGENCY			REMARKS
									P	**W**	**V**	
1	**2**	**3**	**4**	**5**	**6**	**7**	**8**	**9**	**10**			**11**
3.0	TESTS	1.TYPE TESTS INCLUDING SPECIAL TESTS AS PER BHEL SPEC.	MA	ELECT.TEST	1/TYPE/SIZE	IS-325/ BHEL SPEC./ DATA SHEET	IS-325/ BHEL SPEC./ DATA SHEET	TEST REPORT	2	1*	1	* NOTE - 1
		2.ROUTINE TESTS INCLUDING SPECIAL TEST AS PER BHEL SPEC.	MA	-DO-	100%	-DO-	-DO-	-DO-	2	1$	1	$ NOTE - 2
		3.VIBRATION & NOISE LEVEL	MA	-DO-	100%	IS-12075 & IS-12065	IS-12075 & IS-12065	-DO-	2	1$	1	$ NOTE - 2
		4.OVERALL DIMENSIONS AND ORIENTATION	MA	MEASUREMENT & VISUAL	100%	APPROVED DRG/DATA SHEET	APPROVED DRG/DATA SHEET & RELEVANT IS	INSPC. REPORT	2	1	-	
		5.DEGREE OF PROTECTION	MA	ELECT. & MECH. TEST	1/TYPE/ SIZE	RELEVANT IS	BHEL SPEC. AND DATA SHEET	TC	2	-	1	TC FROM AN INDEPENDENT LABORATORY, REFER NOTE-3
		6. MEASUREMENT OF RESISTANCE OF RTD & BTD	MA	-DO-	100%	-DO-	-DO-	-DO-	2	1$	1	$ NOTE - 2
		7. MEASUREMENT OF RESISTANCE, IR OF SPACE HEATER	MA	-DO-	100%	-DO-	-DO-	-DO-	2	1$	1	$ NOTE - 2
		8. NAMEPLATE DETAILS	MA	VISUAL	100%	IS-325 & DATA SHEET	IS-325 & DATA SHEET	INSPC. REPORT	2	1$	1	$ NOTE - 2
		9.EXPLOSION FLAME PROOF NESS (IF SPECIFIED)	MA	EXPLOSION FLAME PROOF TEST	1/TYPE	IS-3682 IS-8239 IS-8240	IS-3682 IS-8239 IS-8240	TC	2	-	1	TC FROM AN INDEPENDENT LABORATORY, REFER NOTE-3
		10. PAINT SHADE, THICKNESS & FINISH	MA	VISUAL & MEASUREMENT BY ELKOMETER	SAMPLE	BHEL SPEC. & DATA SHEET	BHEL SPEC. & DATA SHEET	TC	2	1$	1	SAMPLING PLAN TO BE DECIDED BY INSPECTION AGENCY $ NOTE - 2

BHEL	**PARTICULARS**	**BIDDER/VENDOR**	
	NAME		
	SIGNATURE		
	DATE		BIDDER'S/VENDORS COMPANY SEAL

	QUALITY PLAN		CUSTOMER :			PROJECT TITLE			SPECIFICATION : NUMBER :			
			BIDDER/ : VENDOR			QUALITY PLAN NUMBER PED-506-00-Q-007, REV-03			SPECIFICATION : TITLE			
	SHEET 9 OF 9		SYSTEM			ITEM: AC ELECT. MOTORS 55 KW & ABOVE (LV & MV)			SECTION			VOLUME III
SL. NO.	COMPONENT/OPERATION	CHARACTERISTIC CHECK	CAT.	TYPE/ METHOD OF CHECK	EXTENT OF CHECK	REFERENCE DOCUMENT	ACCEPTANCE NORM	FORMAT OF RECORD	AGENCY			REMARKS
									P	**W**	**V**	
1	**2**	**3**	**4**	**5**	**6**	**7**	**8**	**9**	**10**			**11**

NOTES:

1 DEPENDING UPON THE SIZE AND CRITICALLY, WITNESSING BY BHEL SHALL BE DECIDED.

2 ROUTINE TESTS ON 100% MOTORS SHALL BE DONE BY THE VENDOR. HOWEVER, BHEL SHALL WITNESS ROUTINE TESTS ON RANDOM SAMPLES. THE SAMPLING PLAN SHALL BE MUTUALLY AGREED UPON.

3 IN CASE TEST CERTIFICATES FOR THESE TESTS ON SIMILAR TYPE, SIZE AND DESIGN OF MOTOR FROM INDEPENDENT LABORATORY ARE AVAILABLE, THESE TEST MAY NOT BE REPEATED.

4 WHEREVER CUSTOMER IS INVOLVED IN INSPECTION, AGENCY (1) SHALL MEAN BHEL AND CUSTOMERS BOTH TOGETHER.

Legends for Inspection agency

1. BHEL/CUSTOMER
2. VENDOR (MOTOR MANUFACTURER)
3. SUB-VENDOR (RAW MATERIAL/COMPONENTS SUPPLIER)

P. PERFORM
W. WITNESS
V. VERIFY

BHEL	**PARTICULARS**	**BIDDER/VENDOR**	
	NAME		
	SIGNATURE		
	DATE		BIDDER'S/VENDORS COMPANY SEAL

CABLE SCHEDULE FORMAT

Explanatory notes for filling up cable list for routing through WinPath, the cable routing program (developed by Corporate R&D) being used in PEM.

1. For the purpose of clarity, it may please be noted that the information given in regard to the cables to be routed through WinPath as per the system elaborated below is called "Cable List", while the term "Cable Schedule" applies to the cable list with routing information added after routing has been carried out.
2. The cable list shall be entered as an MS Excel file in the format as per enclosed template EXT_CAB_SCH_FORMAT.XLS. No blank lines, special characters, header, footer, lines, etc. shall be introduced in the file. No changes shall be made in the title line (first line) of the template.
3. The field properties shall be as under:
    a. UNITCABLENO: A/N, up to sixteen (16) characters; each cable shall have its own unique, unduplicated cable number. In case this rule is violated, the cable cannot be taken up for routing.
    b. FROM: A/N, up to sixty (60) characters; the "From" end equipment/ device description and location to be specified here. Information in excess of 60 characters will be truncated after 60 characters.
    c. TO: A/N, up to sixty (60) characters; the "To" end equipment/ device description and location to be specified here. Information in excess of 60 characters will be truncated after 60 characters.
    d. PURPOSE: A/N, up to sixty (60) characters; the purpose (i.e. power cable/ indication/ measurement, etc.) to be specified here. Information in excess of 60 characters will be truncated after 60 characters.
    e. REMARKS: A/N, up to forty (40) characters; Any information pertinent to routing to be specified here (e.g., cable number of the cable redundant to the cable number being entered). Information in excess of 40 characters will be truncated after 40 characters.
    f. CABLESIZE: A/N, 7 characters exactly as per the codes indicated below shall be specified here. The program cannot route cables described in any other way/ format.
    g. PATHCABLENO: Field reserved for utilization by the program. User shall not enter any information here.
4. One list shall be prepared for each system/ equipment (i.e., separate and unique cable lists shall be prepared for each system).
5. The cables shall be described as per the scheme listed below:

A	NN	A	NNN
|	|	|	|
Cable Voltage Code (see B below)	No. of cores (e.g. 01,03,3H, 07)	Cable code (See C below)	Cable size (e.g. 035,185,2.5, 0.5)

(A) SYSTEM VOLTAGE CODES:

(ac) A = 11KV, B = 6.6KV, C = 3.3KV, D = 415V, E = 240V, F = 110V

(dc) G = 220V, H = 110V, J = 48V, K = +24V, L = -24V

(B) CABLE VOLTAGE CODES:

A = 11KV (Power cables)

Explanatory notes for filling up cable list for routing through WinPath, the cable routing program (developed by Corporate R&D) being used in PEM.

B = 6.6KV (Power cables)
C = 3.3KV (Power cables)
D = 1.1KV (LV & DC system power & control cables)
E = 0.6KV (0.5 sq. mm. Control cables)

(C) CABLE CODES

PVC Copper

A = Armoured FRLS	B = Armoured Non-FRLS
C = unarmoured FRLS	D = Unarmoured Non-FRLS

PVC Aluminium

E = Armoured FRLS	F = Armoured Non-FRLS
G = unarmoured FRLS	H = Unarmoured Non-FRLS

XLPE Copper

J = Armoured FRLS	K = Armoured Non-FRLS
L = unarmoured FRLS	M = Unarmoured Non-FRLS

XLPE Aluminium

N = Armoured FRLS	P = Armoured Non-FRLS
Q = unarmoured FRLS	R = Unarmoured Non-FRLS

S = FIRE SURVIVAL CABLES
T = TOUGH RUBBER SHEATH
U = OVERALL SCREENED
V = PAIRED OVERALL SCREENED
W = PAIRED INDIVIDUAL SCREENED
Y = COMPENSATING CABLES
I = PRE-FABRICATED CABLES
Z = JELLY FILLED CABLES

CABLE SCHEDULE FORMAT **ANNEXURE III**

UNITCABLENO	FROM	TO	PURPOSE	CABLE SCOPE (BHEL PEM/ VENDOR)	REMARKS	CABLESIZE	PATHCABLENO	TENTATIVE CABLE LENGTH

SECTION-D3

(GENERAL TECHNICAL REQUIREMENT FOR C&I)

DATA SHEET FOR MOTORIZED VALVE

FORM NO. PEM-6666-0

	Data Sheet FOR MOTORISED VALVE ACTUATOR	SPECIFICATION NO.: PE-ID-412-145-I902
		VOLUME II B
		SECTION D
		REV. NO. 01 DATE: 04.07.15
		SHEET 1 OF 3

Data Sheet A & B

		DATA SHEET-A (TO BE FILLED BY PURCHASER)	DATA SHEET-B (TO BE FILLED-UP BY BIDDER)
GENERAL*	* PROJECT	2x 660 MW ENNORE STP	
	OFFER REFERENCE		
	* TAG NO. SERVICE		
	* DUTY	☐ ON / OFF ☐ INCHING	
	* LINE SIZE (inlet/outlet): MATERIAL		
	* VALVE TYPE	☐ GLOBE ☐ GATE ☐ REG. GLOBE ☐ BUTTERFLY	
	* OPENING / CLOSING TIME		
	* WORKING PRESSURE		
	AMBIENT CONDITION	SHALL BE SUITABLE FOR CONTINUOUS OPERATION UNDER AN AMBIENT TEMP. OF 0-55 DEG C AND RELATIVE HUMIDITY OF 0-95%	
	VALVE SEAT TEST PRESS	BIDDER TO SPECIFY	
	REQUIRED VALVE TORQUE	BIDDER TO SPECIFY	
	ACTUATOR RATED TORQUE	BIDDER TO SPECIFY	
CONSTRUCTION AND SIZING	CONSTRUCTION	TOTALLY ENCLOSED, WEATHER PROOF, IP:68	
	MECHANICAL POSITION INDICATOR	TO BE PROVIDED FOR 0-100% TRAVEL	
	BEARINGS	DOUBLE SHIELDED, GREASE LUBRICATED ANTI-FRICTION.	
	GEAR TRAIN FOR LIMIT SWITCH/TORQUE SWITCH OPERATION	METAL (NOT FIBRE GEARS). SELF-LOCKING TO PREVENT DRIFT UNDER TORQUE SWITCH SPRING PRESSURE WHEN MOTOR IS DE-ENERGIZED.	
	SIZING	OPEN/CLOSE AT RATED SPEED AGAINST DESIGNED DIFFERENTIAL PRESSURE AT 85% OF RATED VOLTAGE. FOR ISOLATING SERVICE THREE SUCCESSIVE OPEN-CLOSE OPERATIONS OR 15 MINS. WHICHEVER IS HIGHER. **FOR INCHING SERVICE - 150 STARTS/HR MINIMUM & FOR REGULATING SERVICE - 600 STARTS/HR MINIMUM.**	
HANDWHEEL	* REQUIRED	■ YES ☐ NO	
	* ORIENTATION	☐ TOP MOUNTED ☐ SIDE MOUNTED	
	*TO DISENGAGE AUTOMATICALLY DURING MOTOR OPERATION.		
ELECTRIC ACTUATOR	ACTUATOR MAKE/MODEL	BIDDER TO SPECIFY	
	MOTOR MAKE / MODEL / TYPE / RATING (KW)	BIDDER TO SPECIFY	
	@ MOTOR TYPE	SQUIRREL CAGE INDUCTION MOTOR, STARTING CURRENT LIMITED TO SIX TIMES THE RATED CURRENT-INCLUSIVE OF **I.S.** TOLERANCE	
	ACTUATOR APPLICABLE WIRING DIAGRAM	☐ ENCLOSED (BIDDER TO CONFIRM) A: ☐ DRG. NO. 3-V-MISC-24227 R00 B: ☐ DRG. NO. 3-V-MISC-24550 R00 C: ☐ DRG. NO. 3-V-MISC-24283 R00 D: ☐ DRG. NO. 4-V-MISC-90271 R11 E: ☐ For Thyristor based Integral starter, Bidder/Vendor to furnish wiring diagram	
	COLOUR SHADE	☐ BLUE (RAL 5012) ☐ DURING DETAIL ENGG.	
	PAINT TYPE **(## Refer Notes)**	☐ ENAMEL ■ ☐ EPOXY ☐	
	SHAFT RPM	BIDDER TO SPECIFY	
	OLR SET VALUE	BIDDER TO SPECIFY	
	@ STARTING / FULL LOAD CURRENT	BIDDER TO SPECIFY	
	NO. OF REV FOR FULL TRAVEL	BIDDER TO SPECIFY	
	@ PWR SUPP TO MTR / STARTER	415V, 3PH, AC	
	@ CONTROL VOLTAGE REQUIREMENT	TO BE DERIVED FROM THE POWER SUPPLY TO THE STARTER ☐ 230 V ☐ 110 V	

	SPECIFICATION FOR MOTORISED VALVE ACTUATOR	SPECIFICATION NO.: PE-ID-412-145-I902	
		VOLUME II B	
		SECTION D	
		REV. NO. 01	DATE: 04.07.15
		SHEET 2 OF 3	

Data Sheet A & B

		DATA SHEET-A (TO BE FILLED BY PURCHASER)	DATA SHEET-B (TO BE FILLED-UP BY BIDDER)
	@ ENCLOSURE CLASS OF MOTOR	☐ IP 67 ☐ FLAME PROOF	
	@ INSULATION CLASS	CLASS-F TEMP. RISE LIMITED TO CLASS-B	
	@ WINDING TEMP PROTECTION	■ THERMOSTAT (3 Nos.,1 IN EACH PHASE) ☐ ----------	
	SINGLE PHASE / WRONG PHASE SEQUENCE PROTECTION	REQUIRED	
INTEGRAL STARTER	INTEGRAL STARTER	■ REQUIRED ☐ NOT REQUIRED	
	TYPE OF SWITCHING DEVICE	■ CONTACTORS ☐ THYRISTORS	
	TYPE	■ CONVENTIONAL ☐ SMART (NON-INTRUSIVE)	
	STEP DOWN CONT. TRANSFORMER	■ REQUIRED	
	OPEN / CLOSE PB	■ REQUIRED ☐ NOT REQUIRED	
	STOP PB	■ REQUIRED ☐ NOT REQUIRED	
	INDICATING LAMPS	■ REQUIRED ☐ NOT REQUIRED	
	LOCAL REMOTE S/S	■REQUIRED ☐ NOT REQUIRED	
	STATUS CONTACTS FOR MONITORING	■ REQUIRED ☐ NOT REQUIRED	
	INTEGRAL STARTER DISTURBED SIGNAL	REQUIRED (MOTOR THERMOSTST TRIP,O/L RELAY OPERATED, CONT./POWER SUPPLY FAILED, PHASE LOSS, S/S IN LOCAL/OFF MODE, STOP PB OPTD, TORQUE OPEN/CLOSE CUTOFF) 1	
INTERPOSING RELAY/OPTO COUPLER (Applicable for integral Starter)	TYPE OF ISOLATING DEVICE	☐ INTERPOSING RELAY ☐ OPTO COUPLER ☐ EITHER	
	QUANTITY	■ 2 NOs. ☐ 3 NOs.	
	DRIVING VOLTAGE	■ 20.5 – 24V DC ☐ _____V DC	
	DRIVING CURRENT	■ 125mA MAX ☐ _____mA MAX	
	LOAD RESISTANCE	■ > 192 ohms - <25 k ohms ☐ > _____ohms - < _____ohms	
TORQUE SWITCH (Not Applicable for Smart Actuator) **($$ Refer Notes)**	MFR & MODEL NO.	BIDDER TO SPECIFY	
	OPEN / CLOSE	■1 No. ☐2Nos. / ■1 No. ☐2Nos	
	CONTACT TYPE	2 NO + 2 NC	
	RATING	5A 240V AC AND 0.5A 220V DC	
	CALIBRATED KNOBS(OPEN&CLOSE TS)	REQUIRED FOR SETTING DESIRED TORQUE	
	ACCURACY	+3% OF SET VALUE	
LIMIT SWITCH (Not Applicable for Smart Actuator) **($$ Refer Notes)**	MFR & MODEL NO.	BIDDER TO SPECIFY	
	OPEN : INT : CLOSE	☐1 No ■2 Nos. / 2 Nos. (ADJ.) / ☐1 No. ■2Nos.	
	CONTACT TYPE	2 NO + 2 NC	
	RATING (AC / DC)	5A 240V AC AND 0.5A 220V DC	

	Data Sheet FOR MOTORISED VALVE ACTUATOR	SPECIFICATION NO.: PE-ID-412-145-I902	
		VOLUME II B	
		SECTION D	
		REV. NO. 01	DATE: 04.07.15
		SHEET 3 OF 3	

Data Sheet A & B

		DATA SHEET-A (TO BE FILLED BY PURCHASER)	DATA SHEET-B (TO BE FILLED-UP BY BIDDER)
POSITION TRANSMITTER	POSITION TRANSMITTER (For inching duty & other specific applications)	■ REQUIRED ☐ NOT REQUIRED	
	MFR & MODEL NO.	BIDDER TO SPECIFY	
	TYPE	☐ ELECTRONIC (2 WIRE) R/I CONVERTER ■ ELECTRONIC (2 WIRE) CONTACTLESS	
	SUPPLY	■ 24V DC ☐	
	OUTPUT	■ 4-20mA	
	ACCURACY	± 1% FS	
SPACE HEATER	@SPACE HEATER	REQUIRED	
	@ POWER SUPPLY (NON INTEGRAL)	230V AC,1 PH.,50 Hz	
	@ POWER SUPPLY (INTEGRAL)	BIDDER TO SPECIFY	
	@ RATING		
TERMINAL BOX	ACTUATOR/MOTOR TERMINAL BOX	REQUIRED	
	ENCL CLASS ACTUATOR/MOTOR T.B.	@■ IP 68 @☐.....	
	@ EARTHING TERMINAL	REQUIRED	
	PLUG & SOCKET(9 PIN) (FOR COMMD, LS/TS FEED BACK, PoT)	☐REQUIRED ■ NOT REQUIRED☐ ☐ 2 NOS. ☐ ----------	
CABLE GLANDS	@ POWER CABLE GLAND	SIZE:----------	
	@ SPACE HEATER CABLE GLAND	SIZE:----------	
	OTHER CONTROL CABLE GLANDS	QUANTITY & SIZE :Cable gland suitable for 8Px0.5 sq mm & 2P x 0.5 sq mm Cable.	
WEIGHT	TOTAL WEIGHT (ACTUATOR + ACCESSORIES)	BIDDER TO SPECIFY	_____ Kg.

NOTES:

1. **SCOPE**: DESIGN, MANUFACTURE, INSPECTION, TESTING AND DELIVERY TO SITE OF ELECTRIC ACTUATOR FOR INCHING OR OPEN / CLOSE DUTY.
2. **CODES & STANDARDS**: DESIGN AND MATERIALS USED SHALL COMPLY WITH THE RELEVANT LATEST NATIONAL AND INTERNATION STANDARD. AS A MINIMUM, THE FOLLOWING STANDARDS SHALL BE COMPLIED WITH:
   IS-9334, IS-2147, IS-2148, IS-325, IS-2959, IS-4691 AND IS-4722
3. ACTUATOR SHALL HAVE HARDWIRED CONTACTS FOR FOLLOWING SIGNALS (a) ACTUATOR IN LOCAL MODE (b) ACTUATOR IN REMOTE MODE.
4. BIDDER TO ENSURE AVAILABILITY OF SPARE 1NO + 1NC LIMIT SWITCH & TORQUE SWITCH. 1
5. SS TAG NAME PLATE SHALL BE PROVIDED.
6. TEMPERATURE RISE SHALL BE RESTRICTED TO 70 DEG. C FOR AMBIENT TEMPERATURE OF 50 DEG C.
7. CABLE GLANDS OF DOUBLE COMPRESSION TYPE, Ni PLATED BRASS MATERIAL SHALL BE PROVIDED.
8. THE TORQUE SWITCHES SHALL BE PROVIDED WITH MECHANICAL LATCHING DEVICE TO PREVENT OPERATION WHEN UNSEATING FROM THE END POSITIONS. THE LATCHING DEVICE SHALL UNLATCH AS SOON AS THE VALVE LEAVES THE END POSITION. IF SUCH PROVISION IS NOT POSSIBLE, THE TORQUE SWITCHES SHALL BE BYPASSED BY END-POSITION LIMIT SWITCHES WHICH OPENS ON VALVE LEAVING END POSITION.THESE LIMIT SWITCHES ARE ADDITIONAL TO THE NUMBER OF LIMIT SWITCHES SPECIFIED ELSEWHERE.
9. THE MOTOR SHALL OPERATE SATISFACTORILY UNDER THE +/- 10% SUPPLY VOLTAGE VARIATION AT RATED FREQUENCY, -5% TO +3% VARIATION IN FREQUENCY AT RATED SUPPLY VOLTAGE, SIMULTANEOUS VARIATION IN VOLTAGE & FREQUENCY THE SUM OF ABSOLUTE PERCENTAGE NOT EXCEEDING 10%.
10. THE MOTOR SHALL BE SUITABLE FOR DIRECT ON LINE STARTING.

$$ TORQUE SWITCH & LIMIT SWITCH SHALL ACT INDEPENDENT OF EACH OTHER. TANDEM OPERATION IS NOT ACCEPTABLE.

EPOXY PAINT IS RECOMMENDED FOR COASTAL AREAS.

NOTES* = TO BE FILLED BY MPL (LEAD AGENCY). @= TO BE FILLED BY ES

DATA SHEET FOR MEASURING INSTRUMENT

CHAPTER-3

FIELD AND MEASURING INSTRUMENTS

3.00.00 FIELD & MEASURING INSTRUMENTS (PRIMARY & SECONDARY INSTRUMENTS)

3.01.00 GENERAL REQUIREMENTS

3.01.01 Instruments, control devices and other equipment accessories covered under this specification shall be furnished in accordance with I&C specification sheets and drawings enclosed herewith and the requirements of all applicable clauses of this specification.

3.01.02 The instrumentation and control equipment shall conform to all applicable codes and standards including those referred in Cl. no. 1.08.00 in this Volume. All equipment and systems shall also fully comply with the design criteria stated in chapter-2 of this part.

3.01.03 The instrumentation/control equipment and accessories shall be from the latest proven design for which the performance and high availability have been demonstrated by a considerable record of successful operation in power station service for similar applications. The bidder shall furnish sufficient evidence to fully satisfy the Owner in this regard.

3.01.04 For plug in type instruments, The plug & sockets shall be polarized to prevent wrong connections and have facility for secure coupling in plug-in position to prevent loose connections.
Signal/Electrical connection shall be screwed connection with double compression type Nickel-plated brass cable glands for Explosion proof area, Flame proof area and high vibration prone area.

3.01.05 Every instrument requiring power supply shall be provided with a pair of easily replaceable glass cartridge fuse of suitable rating. Every instrument shall be provided with a grounding terminal and shall be suitably connected to the panel grounding bus.

3.01.06 All field instruments shall be weatherproof, drip tight, dust tight and splash proof suitable for use under outdoor ambient conditions prevalent in the subject plant. All field-mounted instruments shall be mounted in suitable locations where maximum accessibility for maintenance is achieved. The enclosures of all electronic instruments shall conform to IP-65 unless otherwise specified (Explosion proof for NEC article 500, class 1, Division 1 area & flame proof) and an anti corrosive paint shall be applied to the field mounted enclosures / instruments. All the field instruments shall also be provided with SS tag nameplate and double compression type Nickel-plated brass cable gland. Gaskets, Fasteners, Counter and mating flange shall also be included wherever required with the field instruments.

3.02.00 Following minimum requirement of field instruments shall be fulfilled by Bidder (In addition, Redundancy criteria for field instruments shall be as specified elsewhere in specification): -

i. Level switches / pressure switches / flow switches/any other process switches etc. for OLCS / Alarms / Interlocks / Protection. Pressure switches at inlet, outlet

of individual pumps and discharge header of pumps for protection and auto start / stop & alarms.

ii. Level switches for sump/tank level high/normal/ low/very low interlocks.

iii. Level Transmitters (Type as per Owner approval) for open sump/ tank/bunker/vessel/heaters.

iv. Stand pipes on both side of tank for all level instruments (LT, LS & LG).

v. Flow elements with flow transmitter & Flow meter for flow measurement of process medium like Steam, Water, Air, Flue Gas, Fuel oil, open channel liquid, solid fuel, ash flow, DM water, Raw water, Instrument and Service air etc. as decided by owner.

vi. Pressure gauges and temp. Gauges at inlet and outlet of each heat exchanger and cooler.

vii. DPG, DPT & DPS across the filters/strainers.

viii. Tapping points/test points shall be provided.

ix. All primary Instruments, hardwares & JBs etc used for measurement for HFO, LDO & Turbine Lube Oil system shall be flame proof (IEC-79.1, Part I). All primary Instruments, hardwares & JBs etc used for measurement for Hydrogen shall be intrinsically safe and explosion proof as per NEC article 500, class 1, Division 1 area I.

x. All Thermocouples & RTDs shall be Duplex.

xi. All Field Instruments used in acid or alkaline atmosphere shall be with standard Anti corrosion coating i.e. the combination of Polyurethane and epoxy resin baked coating (ANSI/ISA-71.04).

xii. All primary instruments installed at “Minus level or Floor” shall be with protection class of IP 68.

xiii. Transmitters (all type) for monitoring & controls purpose.

xiv Pull cord, belt sway, zero speed switches, emergency stop PB for conveyers, other limit switches, cable gland etc. of CHP which produce spark shall be provided with dust and flame proof enclosure conforming to IS-2148.

xv Lockable Deinterlock switches shall be provided for CHP as per requirement.

xvi Bidder shall provide electronics weighing in motion system as per IS-11547, hermitically sealed load cell of precision strain gauge type,100% over load protection of cell and 250% overload protection for the construction; one calibrator attachment with two weighers.

xvii All field mounted push button, selector switch etc. shall be as per IEC or NEMA 4X protection.

xviii All limit switch shall be conform to IEC-60947-5-1.

xix At APH, **temperature measuring device of different lengths forming grid** shall be provided to have average temperature for variable flow of flue gas, secondary air and primary air. These temperatures may be connected to nearest remote I/O panel.

xx. On both left and right sides of furnace, separate lines shall be laid and provided with **furnace pressure transmitters having wider range** than the furnace pressure transmitter.

xxi. Temp. Transmitters are envisaged with RTD & Thermocouples for monitoring services/application only. However any RTD & Thermocouples are used for control, interlock & protection application, same shall be directly wired to DDCMIS/DCS/PLC using instrumentation & Extension cables respectively.

xxii. As for the water flow/ steam flow measurements, **necessary flow elements/ transmitters are chosen in the process line and supplied such that their algebric summation shall be mass balanced for calculating the system efficiency**.

xxiii. Contacts less, electronic 2-wire position transmitters shall be provided for all inching type motorised valve and dampers.

xxiv. For CW sump level, Raw water reservoir level, Turbine oil tank, coal bunkers, Ash Silo, LDO/HFO tank, DM water tanks, CS tank, Acid and alkali applications, only non contact type level transmitters like Acoustic, Ultrasonic, Radar based shall be provided by bidders as specified in NIT and as approved by owner.

xxv. Considering the type of application, wireless technology to bring signals to DDCMIS may be adopted by interfacing with OPC gateway to avoid cabling for smart level transmitters specified above at sr. no. xxiv. However Wireless technology as adopted by Bidder shall be reliable and field proven in power plants and same shall be approved by Owner.

xxvi. For Turbine oil, HFO/LDO applications & H2 Gas application, zener protection on power supplies shall be included.

xxvii. Where the process fluids are corrosive, viscous, solid bearing or slurry type, diaphragm seals shall be provided. Parts below the diaphragm shall be removable for cleaning. The entire volume above the diaphragm shall be completely filled with an inert liquid suitable for the application. For HFO, LFO Applications, SS capillary with thin wafer element with ANSI RF flanged ends are to be provided. For hazardous area, explosions proof enclosure as described in NEC article 500 shall be provided.

FIELD INSTRUMENTS SHALL BE SUPPLIED & OFFERED AS PER DATA SHEETS SPECIFIED BELOW:

3.03.00 TRANSMITTERS, SWITCHES, GAUGES AND PANEL MOUNTED INSTRUMENTS

3.03.01 Pressure, Differential Pressure, DP type Level and Flow Transmitters (PT, DPT, LT & FT)

Smart Transmitters of the electronic type shall be furnished.

All Transmitter shall be installed in closed LIE in the boiler area. Similarly transmitter for TG shall also be in LIE except the transmitters located in covered area on TG floor and these shall be mounted in LIR.

Transmitters shall be equipped with mounting brackets suitable for a mounting in transmitter enclosures.

In general, Transmitters are envisaged to be grouped at several places as to be decided during detailed engg. stage. For this purpose, suitable enclosures complete with all tubing, fittings, purge meters, loop cable trays etc. shall be provided.

Type/Construction	:	Sealed capacitance/ Inductance/ Silicon resonance type
Material		
- Body	:	Die cast Aluminum with epoxy coating for air & flue gas SS316 for other services
- Diaphragm	:	316 SS
- Measurement element	:	Teflon seal
- Valves	:	Carbon steel for non-corrosive Applications SS316 for corrosive applications.
Output signal	:	4 to 20 m Amp. DC (Two wires) HART Compatible
Local Indicator	:	LCD indicator (5 digit) with scale of Engg. unit
Overall Accuracy	:	± 0.04% or better of Span for BTG package ± 0.065% or better of Span for BOP packages ± 0.2% or better of span for remote seal type transmitter.
Turn down ratio	:	100:1 in general
Stability	:	± 0.15% of URL for 5 years.
Response time	:	150 msec.
Power supply	:	24V DC nominal
Drive capability	:	600 Ohms nominal
Enclosure Class	:	IP-65 (Explosion proof for NEC Class-1, Division 1 area)
Span and Zero	:	Locally adjustable, non-interacting

Zero suppression / elevation	:	At least 100% of Span
Connection		
- Process	:	1. Half (1/2) inch NPT (F) Quarter (1/4) inch NPT with/without oval flanges
- Electrical	:	Suitable for Plug in type connection (Both side of transmitter), unused entry with blind plug.
Accessories	:	
- For Absolute Pressure Transmitters:		Two (2) valve SS316 manifold
- For Gauge & Vacuum pressure transmitter	:	Three (3) valve SS316 manifold
- For DP, level & flow transmitter	:	Five (5) valve SS316 manifold
- For oil and corrosive liquids	:	Separator diaphragm seals
- For all transmitters	:	Mounting bracket

Manifold should not be mounted on the transmitter, Manifold shall be non integral and standalone type. Snubbers/Pulsation dampners shall be used where the process media is unstable for measurement such as the discharge of a pump. Over range protection shall be used where necessary. The coil syphons & condensate pots shall be used for steam services. Transmitters shall be provided with suitable drain & vent points.

3.03.01.01 Transmitters & other HART based instruments shall be supplied along with 3 Nos. of universal type hand held/portable pressure calibrators. Temperature transmitters shall be supplied along with 3 Nos. of hand held/portable mV source generators.

3.03.02 PRESSURE SWITCHES (PS) & DIFFERENTIAL PRESSURE SWITCHES (DPS)

Applicable Standards	:	IS3624 - 1966/ISA-RP-8.1 except as modified in spec.
Type/Construction	:	Bourdon/Sealed Diaphragm Piston Actuated preferable. Indicators with contacts are not acceptable.
Materials		
- Bellows	:	316 SS
- Bourdon tube	:	316 SS
- Movement	:	316 SS
- Enclouser	:	Die-cast aluminum with stoved enamel black finish. Epoxy coating shall be provided for corrosive atmosphere.
- Protective Diaphragm	:	Teflon

Accuracy	:	± One (1) percent or better
Repeatability	:	± 0.5(half) percent or better
Setting & Differential	:	Adjustable
Contact		
- Number	:	DPDT /2 SPDT
- Type	:	Auto reset with internal Adjustable snap action micro switch
- Rating	:	5 Amp, 240V AC / 0.2 Amp, 220V DC
Connection - instrument	:	Half (1/2) inch NPT Male Process
Electrical	:	Suitable for Plug in type connection. All the switches are internally connected and brought to the surface with Amphenol male/female connection. Cabling need not terminated inside the switch. Cable ends are to be soldiered in connector and to be inserted for easy maintenance.
- Over range protection	:	One Fifty (150) percent of full scale
Enclosure Class	:	IP-65 or better (Explosion/Flame proof for NEC Class-1, Division 1 area)
Accessories		
- 3 / 5 valve manifold	:	As applicable for all switches
- Self cleaning type pulsation dampners/Snubber (Material SS316)	:	Pump and compressor discharge lines
- Syphon	:	For all steam lines
- Protective separating diaphragm	:	For fuel oil & corrosive liquid lines.
Mounting	:	Local (in LIE/LIR for BTG package).

3.03.03 PRESSURE & DIFFERENTIAL PRESSURE GAUGES (PG & DPG)

Applicable standard	:	IS:3602-1966, IS/3624, ASME B 40.1
Type/Construction		
-760 mm to 1.0Kg/cm2	:	Bellows/Diaphragm
-Above1.0Kg/cm2	:	Bourdon Tube
- Suction side of pumps	:	Compound gauge
Materials		
- Bourdon tube	:	316 SS
- Bellows	:	316 SS
- Movement	:	316 SS
- Case	:	SS 316/ Die-cast aluminum with stoved enamel black finish. Epoxy coating

		shall be provided for corrosive atmosphere.
- Protective Diaphragm	:	Teflon
Dial size	:	150mm with shatter proof glass
Scale Details	:	Graduations in black lines on white dial, on white dial, 270 Deg. pointer deflection scale provided with glass cover. Smallest scale division shall be one (1) percent of full scale value or smaller. Pointer stop for all gauges.
Accuracy	:	± One (1) percent or better
Connection - Instrument Process	:	1/2 inch NPT Male Bottom
Mounting	:	Local
	:	1/2 inch NPT Male (Back entry) mounted on local gauge board.
Enclosure Class	:	IP-65 or better (Explosion/Flame proof for NEC Class-1, Division 1 area)

Accessories

- 3 way needle valve/manifolds	:	For all gauges
- Self cleaning type Pulsation dampener/snubber (S316)	:	Pump and compressor discharge lines
- Syphon	:	For all steam lines
- Protective separating	:	For fuel oil and corrosive liquid lines

Other particulars

- External Zero adjustment	:	For all gauges
- Safety device		
Ranges 5 to 20 Kg/cm2	:	Rubber blow out disc with open front construction.
Ranges above 20 Kg/cm2	:	Neoprene safety diaphragm at the back with solid front construction.
- Over range protection	:	One Fifty (150) percent of full scale
Other Requirments	:	Movement mechanism shall be glycerin filled for oil services & vibration prone area.
	:	For Fuel oil & corrosive liquid lines diaphragm type sensors required. Armored capillary of 10 M for Fuel oil & Corrosive liquid service.

: Contact type pressure gauges are not acceptable for interlock & protection.

: For condensate storage tank the pressure gauge in terms of0-10000 mm wc or suitable range having **dial size of 300mm or bigger size** shall be provided.

3.03.04 **TEMERATURE TRANSMITTERS**

Type	:	SMART type configurable from control room through HART protocol (HMS System).
Display type	:	Indicating type (5 digit LCD Display),
Accuracy	:	±0.10%,
Ambient temperature error	:	0.1% per 10°C change
Output	:	4-20 mA DC (2 wire system) HART compatible signals for analogue monitoring inputs to the distributed control system (DDCMIS), DCS & PLC.
Protection class	:	NEMA 4/IP66 or equivalent degree of protection for enclosure)/ (Explosion/Flame proof for NEC Class-1, Division 1 area)/ flame proof (IEC-79.1, Part I). As applicable).
Material of accessories	:	SS316.
Stability	:	± 0.1 % or ± 0.1 deg C of reading (whichever is great) for 2 years in case of RTD inputs and for 1 year in case of Thermocouples inputs.
Operating Voltage	:	16 – 48 V DC
Calibration	:	as per NIST monograph 125 for T/C & European Curve Alpha = 0.00385 for RTD .
Ref. Junction compensation	:	Provided
Span/zero adjustment	:	Locally adjustable, Non interacting
Auto calibration	:	Provided
Burn out protection upscale	:	Provided
Input - output isolation	:	Provided
Circuit ungrounded	:	Provided

Any RTD & Thermocouples shall be directly wired to DDCMIS/DCS/PLC for metal temperature application, bearing & winding temp application only.

The Temperature transmitter shall accept Universal dual inputs of all types of thermocouples & RTD, 0-5V input signals etc.

Temp., Fuel oil temp. measurement as per IBR rules and regulations

3.03.10 TEST THERMOWELLS (TW)

Applicable Standard	:	ASME PTC 19.3 TW - 2010
Type/Construction	:	Machined from Bar Stock
Material	:	316 SS/F11/F22/F91
Connection		
- Pipe	:	M33 x 2
- Test Instrument	:	To suit test instruments
Accessories	:	Plug with chain
IBR Certification	:	For high pressure service, Steam Temp., Fuel oil temp. measurement as per IBR rules and regulations Bidder shall provide calculation for thermowell as per ASME – PTC-19.3 TW - 2010.

Test wells shall be provided on main steam, reheat steam, extraction steam, feed water, condensate, spray water lines and other piping as required to meet ASME test requirements.

3.03.11 DIRECT MOUNTED LEVEL TRANSMITTERS (LT)

Displacer type level transmitter shall not be used in the process anywhere in the plant.

3.03.12 Ultrasonic Level Transmitter (for Water sump/Tank level, Raw water reservoir level, Cooling water fore bay level measurements)

Principle of Operation	:	Detection of reflected ultrasonic pulse
Measuring Ranges	:	Up to 30 meters (typical)
Signal Processing	:	Microprocessor Controlled Signal Processing
Operating Freq.	:	10 KHz to 50 KHz (typical)
Display	:	Head mounted alpha-numeric back lit LCD/LED
Calibration & Configuration	:	Accessible from front of panel & HART calibrator.
Diagnosis	:	On-line
Status	:	For power, Hi / Lo / V. Hi / V. Lo-level indication, fault etc.
Construction	:	Plug-on board
Power supply	:	240 V AC 50 Hz / 24V DC
Signal Output	:	4-20 mA DC with HART (isolated) - 600 Ohm load.
Hysteresis	:	Fully adjustable preferred
Output contacts	:	2SPDT Potential free changeover contacts @ 8A 230V AC.
Accuracy & Repeatability	:	± 0.25% of span or better
Resolution	:	± 0.1% of span

Temperature Compensation: To be provided with Transducer.

Operating temp.	:	Transmitter-50 deg C and Sensor – 80 deg C
MOC Sensor	:	Body- PVDF and Face – Polyurethene
Humidity	:	1% to 95% non condensing.
Enclosure	:	IP-67 Epoxy painted die cast Aluminum or SS316L housing.
Cable Connection	:	3/4" ET
Mounting	:	2" – 4" NPT or flanged
Accessories	:	Cable gland, prefab cable, mounting accessories like EPDM seal, SS316 flanged etc. Additional separate local display unit with large Alphanumeric back light LCD/LED & to be provided for the applications which will be decided during detailed engineering.

3.03.13 CAPACITANCE TYPE LEVEL TRANSMITTER

The total system shall consist of capacitance probe, pre-amplifier and transmitter

Type	:	Capacitance type
Probe	:	a) Rod or suspended electrode. b) Rope type probes may be used only where required probe length is greater than 3 meters
Probe Mounting	:	Stainless steel 1-1/2 ANSI RF Flange / ¾" NPT (M)
Material of construction	:	316 SS
Insulation	:	PTFE Part/Full as per service.
Transmitter	:	The transmitter shall receive output of the preamplifier and convert it into 4-20 mA DC output signal.
Accuracy	:	± 1% of Full scale
Repeatability	:	± 0.5 % of Full scale
Load	:	Min 600 Ohms
Enclosure	:	Powder/Epoxy coated Die cast aluminum. with neoprene gasket conforming to IP 65. (Explosion proof for NEC Class-1, Division 1 area).
Ambient temperature	:	0-60 ºC.
Mounting	:	Wall / Surface
Supply voltage	:	240V AC, 50Hz / 24V DC
Response time	:	100 m sec or better
Cable connection	:	¾" ET
Accessories	:	Counter flange, Cable gland, prefab cable if any
Preferable features	:	Alarm output contacts with adjustable set point facility

3.03.14 GUIDED WAVE RADAR/RADAR LEVEL TRANSMITTER

Type	:	Guided wave Radar (Contact type)/Radar (Non contact type) as finalized by owner.
Application	:	For Turbine Lube oil tank, HFO & LDO tank level,

~~Output Signal~~	~~:~~	~~Pulse~~
~~Material of Construction~~	~~:~~	~~AISI 316~~
~~Sensor Seal~~	~~:~~	~~PTFE / higher based on temperature~~
~~Flow range~~	~~:~~	~~As required.~~
~~Linearity~~	~~:~~	~~0.25% or better.~~
~~Repeatability~~	~~:~~	~~0.02% or better.~~
~~Ambient temperature~~	~~:~~	~~50 deg C~~
~~Mounting~~	~~:~~	~~On-Line mounting with flanges of stainless steel.~~
~~Enclosure~~	~~:~~	~~IP 65~~
~~Accessories~~	~~:~~	~~Nuts, bolts, gaskets etc.~~

~~**Transmitter**~~

~~Electronics~~	~~:~~	~~Solid State~~
~~Power Supply~~	~~:~~	~~240V AC, 50Hz. UPS~~
~~Input~~	~~:~~	~~Input from Sensor~~
~~Display~~	~~:~~	~~4 1/2 digit LCD~~
~~Output~~	~~:~~	~~Isolated 4-20mA DC HART~~
~~Measuring Accuracy~~	~~:~~	~~0.5% of full scale range~~
~~Totalized Value~~	~~:~~	~~Required~~
~~Housing~~	~~:~~	~~IP 65 (Explosion proof for NEC Class 1, Division 1 area)~~
~~Nameplate~~	~~:~~	~~Tag number, service engraved in stainless steel tag plate~~
~~Accessories~~	~~:~~	~~Clamping strip, bracket, prefab cable etc. Special tool kit for calibration/ configuration .~~

3.03.23 Flow Transmitter (Ultrasonic)

Type	:	ULTRA SONIC, 2-wired
Sensing element	:	Non-contact
Output	:	4-20mA with HART Protocol
Accuracy	:	± 0.1% FS
Supply	:	24 V DC
Enclosure class	:	IP-65

Transmitter

Mounting	:	On Nozzle
Mounting position	:	Top mounted
Housing	:	Plastic
Display	:	Head mounted LCD Display and remote LCD display
Process connection	:	NPT/Flanged
Electrical connection	:	NPT
Turn Down ratio	:	1:100
Measuring range	:	Adjustable (as per process requirement)
Totaliser	:	Required
Accessories	:	As per process requirement Additional separate local display unit with large Alphanumeric back light LCD/LED & to be provided for the applications which will be decided during

Nuts, bolts, gaskets, mesh etc.

b) Special tool kit for calibration/configuration.

3.03.25 Electromagnetic Flow meter

Electromagnetic flow meters shall have separate transmitter having accuracy ±0.2% with zero stability feature, suitable for process medium with <= 5 micron Siemens conductivity, flanges material SS-316, electrode & measuring tube material SS-316, liner material Teflon and enclosure IP-66, local digital display configurable as totaliser, 4-20 mA output signal HART compatible with zero and span field adjustable. Application – DM Water and for other application as decided by owner.

3.03.26 FLOW GAUGES (FG)

Type/Construction	:	a) On-line type Rotameter for 50 Nb and below lines b) Bypass type Rotameter for above 50 Nb lines.

Material

- For On-line type

Metering Tube	:	Borosilicate glass
Float	:	316 SS
Packing	:	Teflon
End fittings	:	304 SS

-For Bypass type

Metering Tube	:	Borosilicate glass
Float	:	316 SS
Packing	:	Teflon
End Fittings	:	304 SS
Orifice Plate	:	316 SS
Carrier ring	:	304 SS
Flanges & Mating flanges	:	Same as pipe material, 200 lbs ANSI - RF
Impulse pipe	:	Same as pipe material
Fittings	:	2000 ANSI, SW ends to match with pipe material.
Dial Size/Scale length	:	250 mm
Scale Details	:	Direct reading type engraved on detachable Aluminum scale
Accuracy	:	± Two (2) percent
Reproducibility	:	Half (1/2) percent
Rangeability	:	1:10
Connection	:	SCRD NPT

Accessories	:	a)	Isolating valves (for Bypass type only)
		b)	Bolts, Nuts and Gaskets as required
Tests	:	Shall be tested at two hundred (200) percent of the maximum process pressure	

3.03.27 SIGHT FLOW GLASS INDICATORS

Type/Construction	:	Flapper type.
Materials	:	
Body	:	Carbon steel/SS316 as per process requirement
Glass	:	Toughened Borosilicate
Gaskets	:	Neoprene
Bolts & nuts	:	SS
Flappers / Rotating Wheel	:	316 SS
Flappers / Rotating Wheel holder	:	304 SS
Process Connection	:	SW (Socket Welded)
Accessories	:	Scale, Bolts, Nuts, Cover plates and Gaskets as required
Tests	:	Tested at two hundred (200) percent of the maximum process pressure.

3.03.28 **SOLID FLOWMETER**

Type	:	Online Impact type Microprocessor Based
Measuring Principle	:	The system measurement is basically pertains to the measurement of horizontal deflection using LVDT, created by the impact of solid flow up on online sensing plate. The horizontal deflection being proportional to the impact forces, LVDT convert this horizontal movement into electrical signal. The inbuilt integrator convert this signal into time based flow rate indication & provide totalized flow also.
Sensing plate	:	316 SS
Sensing head	:	Sensing mechanism shall be mounted outside the process flow line.
Enclosure	:	316 SS
Enclosure protection	:	IP 67 class
Accuracy	:	+/-1%
Repeatability	:	+/- 0.2%
Drift	:	Both zero & span $\pm$ 2% / month
Output	:	4-20mA DC isolated, load 600 ohm (min)
Digital communication	:	yes, (HART) facility
Power supply	:	240 V AC, 50Hz. UPS
Ambient condition	:	Temperature -60^0 C, RH-95% Environment – Highly Dusty

Accessories	:	Shall be complete with all the accessories including digital display for flow rate, integral vents, baffles for air separation, etc. which ever required for satisfactory operation.

Note:-

1. The above on line flow meter shall not create any obstruction on flow.

2. User's list shall be submitted to support on proven satisfactory performance for similar process application.

3.03.29 **Instrument Air System**

The instrument Air Supply System for various pneumatic Control & Instrumentation devices like pneumatic actuators, power cylinders, I/P converters, pneumatically operated valves etc. shall be complete in all respect with necessary Air Filter Regulators, valves, piping/tubing etc.. Each pneumatic instrument shall have an individual air shut off valve. The pressure-regulating valve shall be equipped with an internal filter, a 50 mm pressure gauge and a built in filter-housing blow down valve.

Filter shall be of minimum 5-micron size & sintered bronze material.

On collection of water in the drains of instrument air lines, mechanical automatic drains and periodically solenoid operated drains (with electronic timer - 15m, 30m, 60m and 2 Hours & Timing adjustable) are to be provided.

For mechanical type & Electrical type, the locations to be provided in the instrument air lines of boiler area, Chimney area, turbine area etc., shall be decided during detailed Engineering.

Bulk header nearby the crowded applications shall be provided and from this bulk header individual air lines with necessary isolation values are laid to the application.

These bulk header are to be provided with **mechanical / electronic based automatic Drains.**

Individual moisture separator for O_2 analyzer or vital application shall be provided nearby the instrument so as to enhance the cell life or the performance of vital final control elements.

3.03.30 **Air Filter Regulator (AFR)**

Constant bleed type AFR with an accuracy of $\pm$ 1.0 % inlet pressure range of 5-8 kg/ cm2 and suitable spring ranges (AFR) for use with positioners in control valves, control damper, E/P convertors and shut off valves for phosphor bronze filter element; Filtering particles above five microns. Weather and water proof enclosure. Material of accessories will be SS316.

Air filter regulators shall be provided in the :

(a) Air supply line to valve positioners / power cylinders
(b) Air supply line to electric to pneumatic converters.

(c) Air supply line to pneumatic interlocked block valves.
(d) For each instrument rack, field instruments enclosure for purging.

3.03.31 **Electro-Pneumatic Convertors (E/P)**

Two wire type E/P convertors with an accuracy of ±0.25% accepting 4-20 mA dc signals from control system and converting to 0.2 to 1 kg/cm2 air pressure to operate valve positioner of all final control elements; Housed in cast aluminum casing (with polyurethane paint); NEMA 4 or equivalent degree of protection for enclosure. Material of accessories will be S S. E/P convertors shall have fail freeze (stay put) feature also. Process connection shall be 1/4" NPT (F) and Electrical connection shall be ½" NPT (F). Zero/span adjustment facility shall be provided. The E to P converters shall **retain the pneumatic signal (last value) even in failure of control signal** and shall have **self volume boosters.** Necessary air lock devices and pressure switches for air pressure low alarming shall be provided.

3.03.32 **Solenoid Valves**

Solenoid valves shall be provided with control valves / pneumatic control valves hooked up with process interlock requirements and where direct tripping is involved. The number of ways for solenoid valve shall be provided as indicated below:

(a) Two (2) way solenoid valves shall be provided, where process line of less than 50 mm with low pressure and temperature application.
(b) Three (3) way solenoid valve shall be provided commonly, where the pressure is admitted or exhausted from a diaphragm valve or single acting cylinder, e.g, Pneumatic operated spray water block valve.
(c) Four (4) way solenoid valve shall be provided for operating double acting cylinders, e.g, Pneumatically operated on-off type dampers.
(d) For operation of the fuel oil corner nozzle valves, fuel oil trip valves etc., **double coil solenoid valve** (latch coil & relatch coil) shall be adopted.
Single coil usage requires always power and loss of power leads to closure of above valves resulting the unit trip or loss of generation.
(e) Solenoid Valve coils shall be Class-H high-temperature or Class-F construction as applicable and shall be designed for continuous duty. Three-way solenoid valves shall be designed for universal operation so that the supply air may be connected to any port. Solenoid enclosures shall be NEMA-4)/ (Explosion proof for NEC Class-1, Division 1 area)/ flame proof (IEC-79.1, Part I) As applicable). Body material of solenoid valve shall be Die Cast Aluminum or SS316.

.
(f) All solenoid shall be with varister, LED indication, surge suppress diode and circuits.

3.03.33 Power Cylinders (Pneumatic)

Mounting Type	:	a) Fixed position mounting (End mounting).
	:	b) Trunnion mounting
Control Signal	:	0.2 to 1 Kg/Sq. cm. from I/P converter for modulating purposes. 24V/48VDC operated solenoid valve operating on pneumatic line.

		The Pilot solenoid will have separate coils for open closing purpose.
Supply Air	:	0-7 Kg / Cm2.
Selection	:	Based upon thrust / torque, stroke length, angular movement, full-scale travel time, repeatability, space factor etc. Provision for air-to-open and air-to-close operation.
Casing	:	IP-65.
Accessories (as required)	:	a) Air lock relay b) Hand wheel. c) Air filter regulator with gauge. d) Volume Booster. e) Limit Switches. f) Positioner with Input, Output and supply pressure gauges. g) Pilot Solenoid Valve (Double Coil type) h) Position Transmitter (4-20 mA DC linear output, LVDT or non contact type).
Fail-safe operation	:	Stay put, open or close position on pneumatic / electrical power supply failure as per process safety criteria.
Repeatability	:	Better than 0.5% of full travel.
Hysterisis	:	Less than 1% of full travel.

- Local LCD Display for Dew Point

3.03.42 **Junction Boxes**

v.	Type	:	Flame proof/weather proof
vi.	Enclosure	:	IP-65/Explosion/Flame Proof as per area classification.
vii.	Material	:	FRP with protective Coating
viii.	Cable entry	:	Bottom or Side
ix.	Cable glands	:	Double compression type – Nickel plated brass with PVC hoods.
x.	Mounting	:	Indoor/Outdoor
xi.	No. of terminals	:	As required with standardization with 20% spare of each size & type.
xii.	Terminals	:	Phoenix/Wago (screw less cage clamp type spring loaded)
xiii.	Grounding	:	Two terminals for body and shield ground
xiv.	Door	:	Hinged, lockable type.

xi. Suitable mounting clamps and other accessories shall be in scope of bidder.

xii The brackets, bolts, nuts, screws, glands, lugs required for erection shall be of brass, included in bidder scope of supply. High voltage & insulation resistance test shall also be conducted.

Xiii M6 Ni plated Brass earthing stud shall be provided (external 2 nos. internal 1 no.)

xiv Gasket (Normal)- Neoprene thickness 6.0 mm

3.03.43 **Interposing Relays (IPR)**

Electro magnetic type IPRs with modular design, plug-in type connections, suitable for channel/DIN rail mounting in cabinets; coil rating 24V D.C; 2 set of silver plated change over contacts rated for 0.5A 220 V DC/8 A 240 V AC. Free wheeling diode across relay copper coil and self reset type status LED indicator flag (electronic) shall be provided. Manual forcing/override facility is required. The test voltage for relay shall not be less than 4 KV with operating temperature from –20 deg. C to 60 deg. C. The relay shall have the necessary approvals like V 0 inflammability class in accordance with UL94", IEC60664/IEC60664A/DIN VDE 0110. Facility to stimulate IPR manually shall be provided.The VA burden of relays shall be suitable to match the capacity of output modules. Interposing relay & sockets for mounting the interposing relay shall be of same make only.

3.03.44 RECORDERS (CHARTLESS)

Type	:	Micro-processor based, Digital TFT display type
- No. of Channels	:	Forty Eight (48) point).

6 Nos. of recorders shall be supplied with BTG packages and the parameters shall be decided during detailed Engineering. Quantities of recorders for BOP packages shall be decided during detailed Engineering.
(Simultaneous parameter display preferred)

Input Signal	:	Fully configurable multi range (Programmable) universal (input)
Recording method	:	Continuous with different colour, for each channel
Display colour	:	Selectable from 30 Colours
Bar graph facility	:	To be provided
Digital indication	:	To be provided
Accuracy	:	+/- 0.1 % for reading for DC V Input And 0.1 Deg for TC/RTD input
Programmability	:	Front key board
Data Storage	:	hard disk/ Flash Memory
Data Retrieval	:	Compact 4 GB flash Memory card and USB port with 8 GB USB drive.
Scan rate	:	≤ 20 m **second** for individual channel. **Selection of scan time for individual channel is required.**
Power Supply	:	240 VAC 1 Phase UPS
Ambient Temperature	:	0-50 Degrees
Mounting	:	Front panel mounted weather & Dust proof IP 65
Application software	:	Yes, To be provided
Internal Memory	:	400 MB or more
Screen	:	≥ 10.5" colour LCD TFT
Resolution	:	≥ 640 X 480 Pixels
Type of Display	:	i) Trends ii) Bar Graph iii)Digital display/ values
Event Sampling	:	1/2/5/10/30/60/120 sec.
Zoom & Scroll Facility	:	Required
OWS and printer connectivity port	:	Required
	:	Necessary software shall be supplied for uploading the data.
Communication	:	Additional MODBUS/PROFIBUS ports connectivity between recorder and third party systems.

3.03.45 DIGITAL INDICATOR

Type	:	**Programmable electronic digital indicator** with floating point decimal.
Input	:	4-20 mA DC/1-5V DC/RTD/T/C.
Number of inputs	:	One
Range	:	As per requirement/adjustable by end user

through key pad available on the indicator.

Number of digits	:	Four plus sign
Digit height	:	20 mm or larger
Display	:	Fluorescent red
Input over range/open sensor (T/C)	:	All digits to flash
Input hold time	:	0.7 seconds max.
Accuracy	:	±0.25% of span
Power supply	:	240V AC, 50Hz
Mounting	:	Flush panel, compatible for mounting on mosaic grid panel
Size	:	96x48 mm
Other Particular	:	Indicator receiving thermocouple signal shall have automatic cold junction compensation.
	:	Retransmission Output 4 -20 mA isolated required.
	:	24 V DC inbuilt power supply
	:	Alarm contact with 2 NO/NC contact (rating 5A/230 V AC)

3.03.46 RECEIVER INDICATORS (SINGLE/DUAL CHANNEL)

Type	:	Analogue indicator
Input Signal	:	Universal input (T/C, RTD, 4-20 mA, Voltage)
Scale	:	Range fully configurable and programmable
Measurement Accuracy	:	± 0.2% of span ± 1 count
Resolution	:	0.5% Span
Dead band	:	± 0.2% of span
Repeatability	:	0.2% of span
Full scale response time	:	Less than two(2)seconds
Power Supply	:	240V AC, 50 Hz
Connection	:	Plug in type
Accessories	:	Mounting Bracket for Bins
Other Particulars	:	Indicator receiving thermocouple Signal shall have automatic cold junction compensation.
	:	Retransmission Output 4 -20 mA isolated required.

3.03.47 Temperature Scanner

Type	:	Microprocessor based Electronic Digital Scanner.
No. of channels	:	16/24 (as per the application)
Input	:	RTD /Thermocouple/4-20mA
Accuracy	:	± 0.1 of FS ± 1 count
Number of digits	:	4 digit (7 segment display with Engg. Units)
Digit height	:	12 mm or larger
Display color	:	Fluorescent red/green
Display mode for		

Input over range/open sensor	:	All digits to flash
Mounting	:	Panel mounting
Zero and Span	:	Adjustable by digital calibration
Serial communication communication	:	Isolated RS232/485 for modbus-RTU
Memory Capacity	:	5MB Flash
Alarm output	:	Required
Contact rating	:	2A at 220 V AC
Power supply	:	240 V AC/24 V DC
Properties	:	i. Any channel shall be configured for Data Logging ii. Channel to Channel online Isolation shall be provided iii. Real Time RTC Interface for Printer shall be provided
Operation Modes	:	Auto/manual mode, Run mode, Verify mode, Calibration Mode, Program mode.

3.03.48 AMMETERS (AMM)

Input	:	4-20 mA DC
Mounting	:	Flush panel, compatible for mounting on mosaic grid panel
Face Dimensions	:	96 x 96 mm
Scale/Type	:	Moving coil, circular, FSD 240 deg. With six times suppression scale
Zero adjustment	:	Screw on meter face
Accuracy	:	$\pm$ 1 percent (class 1)
Indication	:	Pointer with scale
Magnetic Shield	:	Shielded Case
Quantities	:	For all HT Motors & LT motor with rating $\geq$ 30 KW and other critical application motors/drives.

3.03.49 VOLTMETER:

Input	:	4 - 20 mA DC
Mounting	:	Flush Panel, compatible for mounting on mosaic grid panel
Face Dimension	:	96x96 mm
Range	:	As per requirement
Accuracy	:	$\pm$ < 0.5 %
Indication	:	Digital type 4 1/2 digit
Magnetic Shield	:	Shielded Case
Connection	:	Plug in type
Quantities	:	For 230 V AC input power supply, UPS power supply, 24 V DC interrogation voltage & 220 V DC.

3.03.50 FREQUENCY METER/MW METER (DIGITAL)

Type	:	Electronic digital 7- segment with fluorescent display
Input	:	4 - 20 mA DC
Mounting	:	Flush Panel compatible for mounting On mosaic grid panel
Number of digits	:	41/2 digit
Face Dimension	:	192X192 mm
Digit size	:	Approximately 40 mm
Range	:	As per requirements
Accuracy	:	± 0.2 Hz
Display	:	Red LED display.
Connection	:	Plug in type
Magnetic Shield	:	Shielded Case

3.03.51 AC CURRENT TRANSDUCERS

Input	:	0 - 1 A CT current
Output	:	Dual 4-20 mA with 500 impedance
Mounting	:	Back rail
Accuracy	:	± 0.25%

3.03.52 DC CURRENT TRANSDUCERS

Input	:	0 - 75 mV
Output	:	Dual 4-20 mA with 500 impedance
Mounting	:	Back rail
Accuracy	:	± 0.25%

3.03.53 AC VOLTAGE TRANSDUCERS

Input	:	0 - 110 V PT, Volts
Output	:	4-20 mA with 500 impedance
Mounting	:	Back rail
Accuracy	:	+ 0.25%

3.03.54 DC VOLT TRANSDUCERS

Input	:	System Voltage
Output	:	4-20 mA with 500 impedance
Mounting	:	Back rail
Accuracy	:	± 0.25%

3.03.55 TRANSDUCERS FOR POWER

Input	:	CT and PT (1A) (110V)
Output	:	4-20 mA with 500 impedance
Mounting	:	Back rail
Accuracy	:	± 0.25%

3.03.56 TRANSDUCERS FOR FREQUENCY

Input	:	110 V PT Volts
Output	:	4-20 mA with 500 impedance
Mounting	:	Back rail
Accuracy	:	± 0.25%

3.03.57 TRANSDUCERS FOR POWER FACTOR

Input	:	PT (110V)
Output	:	4-20 mA with 500 impedance
Mounting	:	Back rail
Accuracy	:	± 0.25%

3.03.58 TRANSDUCERS FOR MVAR

Input	:	CT & PT (110V/1A)
Output	:	4-20 mA with 500 impedance
Mounting	:	Back rail
Accuracy	:	± 0.25%

3.03.59 DIFFERENTIAL FREQUENCY TRANSDUCERS (FOR SYNCHRONIZATION)

Input	:	110 V PT
Output	:	4-20 mA with 500 impedance
Mounting	:	Back rail
Accuracy	:	± 0.25%

3.03.60 DIFFERENTIAL VOLT TRANSDUCERS (FOR SYNCHRONIZATION)

Input	:	System voltage
Output	:	4-20 mA with 500 impedance
Mounting	:	Back rail
Accuracy	:	± 0.25%

3.03.61 PUSH BUTTONS (PB)/ ILPBs FOR ON/OFF, OPEN/CLOSE, START/STOP

Type	:	Momentary/Miniaturised Suitable for mosaic grid 24x48 Mm with 2 PB and 3 coloured LED.
Contact Configuration	:	2 NO + 2 NC
Contact Material	:	Hard Silver Alloy
Contact Rating	:	500V / 10 A
Insulation Voltage terminals and earth	:	2 KV for 1 minute between
Lamp Rating :-		
a) Voltage	:	240 V AC
b) Watt	:	2 Watt (approx.)

Colour

5.19.00 Technical Specification of Chlorine Analyzer

i)	Type	Microprocessor based Continuous flow through sample type with automatic temperature compensation.
ii)	Analyzer power supply	240V AC, 50 Hz, Single Phase from UPS
iii)	Analyzer output	i) 4-20 mA, DC spare output ii) 4-20 mA, DC isolated output for DDCMIS
iv)	Accuracy	0.005 mg/ltr. or 1% of range.
v)	Sensitivity	0.001 mg/ltr. (1 ppb)
vi)	Range	As per schedule.
vii)	Annunciation contacts:	
	- Number	As per schedule, 2 SPDT

	-	Type	Snap action micro switch
	-	Rating	5A, 240V AC, 0.2A, 220V DC
	-	Mounting	Flush
viii)	Terminal points		All components piped & wired to terminal points
ix)	Accessories	i)	Flow regulator
		ii)	Flow gauges
		iii)	Sample rate set valves
		iv)	Other accessories as required to make the system complete

5.20.00 Technical Specification of Residual Chlorine Analyser

SENSOR

Method	:	Amperometric
Electrodes	:	Gold Cathode/Silver Anode
Cell Material	:	PVC
Electrolyte	:	Potassium Bromide

TRANSMITTER

Type	:	Microprocessor Based with self diagnostic features
Transmitter Output	:	4 – 20 mA
Enclosure Protection	:	IP65
Enclosure Material	:	Polyester coated Al.
Electrical Connection	:	½" NPT (F)
Mounting	:	FIELD
Display Type	:	LCD
Display Details	:	4 digit backlit LCD matrix
Diagnostics	:	Required
Meter Range	:	0-1 mg/l
Resolution	:	0.01 ppm
Area Classification	:	SAFE
Electromagnetic Compatibility	:	BUILT – IN
Temp. Compensator	:	AUTO – BUILT – IN
Temp. Compensating element	:	PT100

HOOK UP DRAWING

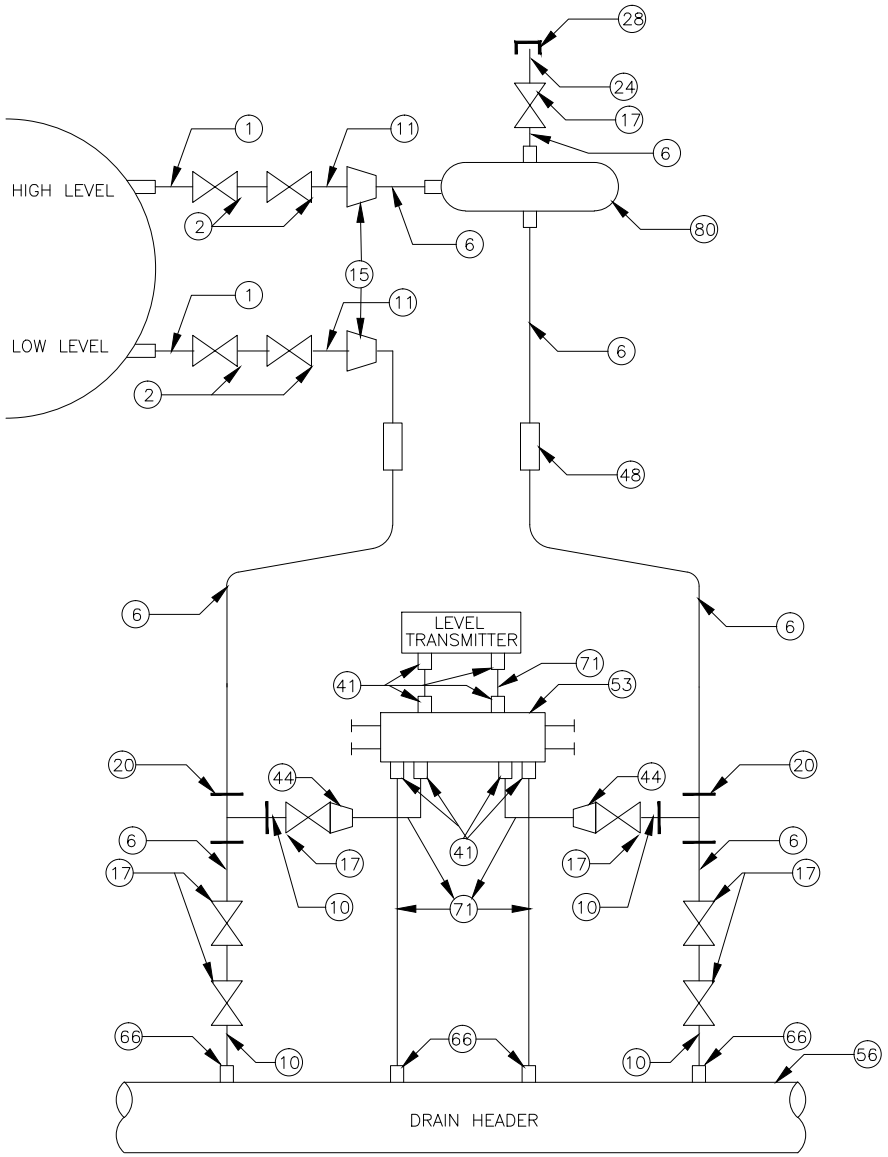

TRANSMITTER MOUNTED BELOW INST. SOURCE POINT

TAG NO.	DESCRIPTION	BOM
80	CONDENSATION CHAMBER	1
71	1/2"OD IMPULSE TUBE, SS-316	AS REQD.
66	1/2" GI SOCKET / FUNNEL	4
56	2"NB GI DRAIN HEADER	AS REQD.
53	5-VALVE MANIFOLD, SS-316	1
48	1/2" SW, CS/AS BULK HEAD PIPE UNION	2
44	1/2"BWX1/2"OD COMPRESSION TUBE FITTING,SS-316	2
41	1/2"NPT(M)X1/2"OD TUBE COMPRESSION FITTING,SS-316	8
28	1/2" NPT (F) CS CAP	1
24	1/2" NPS SCH-80/160X1/2"NPT(M) CS/AS NIPPLE	1
20	1/2" SOCKET WELDED EQUAL TEE CS/AS	2
17	1/2" SOCKET WELDED CS GLOBE VALVE	7
15	1"TO 1/2" SOCKET WELD REDUCER	2
11	1" NPS SCH 80/160 CS/AS NIPPLE	2
10	1/2" NPS SCH 80/160,CS/AS NIPPLE	4
6	1/2" NPS SCH 80/160 CS/AS PIPE	AS REQD.
2	1/2"/3/4"/1" SOCKET WELDED GLOBE VLV/ROOT VLV.	4
1	1/2" NPS SCH 80 NIPPLES OF MATERIAL SAME AS MAIN PIPE WITH NECESSARY ATTACH TO FLANGES	AS REQD.

NOTE:-
1. FOR HIGH TEMP. SERVICE (MORE THAN 80°C) A 'U' TUBE(REF. DWG NO. 114-04-0100) SHALL BE PROVIDED BETWEEN THE MANIFOLD AND THE TRANSMITTER
2. FOR HIGH PR.(MORE THAN 40kg/sqcm) ONE NO. OF ISOLATING VLV. IS PROVIDED IN EACH LINE BETWEEN VLV. MANIFOLD AND 1/2"SW EQUAL TEE AND 2NO. DRAIN VLV. ARE ALSO

REFERENCE DRAWINGS.

NOTES

1. DO NOT SCALE, ASK WHEN IN DOUBT.
2. ALL DIMENSIONS ARE IN MILIMETRES UNLESS NOTED OTHERWISE.
3. BULK HEAD FITTING SW TYPE SHALL BE PROVIDED AT LIE/LIR
4. ABOVE DRWING IS FOR BASIC GUIDE LINE TO BE MEET BY BIDDER, ANY FURTHER IMPROVEMENT DURING DETAILED ENGINEERING SHALL ALSO BE CONFIRMED/PROVIDED BY CONTRACTOR.
5. QUANTITIES OF INSTRUMENTS/ ERECTION HARDWARE SHALL BE AS PER NIT AND AS FINALISED DURING DETAIL ENGINEERING
6. FOR DM PLANT MATERIAL OF ERECTION HARDWARE SHALL BE SS 316 ONLY.

NOTICE

THIS DRAWING IS THE PROPERTY OF DESEIN PRIVATE LIMITED, NEW DELHI, AND IS LENT SUBJECT TO THE CONDITION THAT IT SHALL NOT BE REPRODUCED, COPIED, LENT OR OTHERWISE DISPOSED OF, DIRECTLY OR INDIRECTLY. IT SHALL NOT BE USED TO FURNISH ANY INFORMATION FOR THE MAKING OF DRAWINGS, APPARATUS, OR PARTS THEREOF EXCEPT FOR THE PROJECT SPECIFICALLY PROVIDED FOR BY CONTRACT AGREEMENT WITH DESEIN.

ZONE	MARK	REVISIONS	DATE	CIVIL	MECH.	ELEC.	C&I	H.O.D.
	A	PRELIMINARY	25.04.13				SLN	

APPROVED

DESEIN
CONSULTING ENGINEERS
NEW DELHI - INDIA

CLIENT: TAMILNADU GEN. & DIST. CORPORATION
PROJECT: 2x660MW ENNORE SEZ COAL BASED SUPERCRITICAL THERMAL POWER PROJECT AT ASH DYKE OF NCTPS, CHENNAI.
TITLE :- INST. DRAWING FOR LEVEL TRANSMITTERS
FOR BID PURPOSE ONLY:

	NAME	SIGN.	DATE
CAD/DRAWN	VIKAS		23.04.13
DESIGNED	SKM/SN		23.04.13
CHECKED	S.K.M.		24.04.13
SCALE	N.T.S.		
JOB. No.	D-4027		
DWG.No.	114-04-0110		REV. 0

Sheet No. 13 of 19

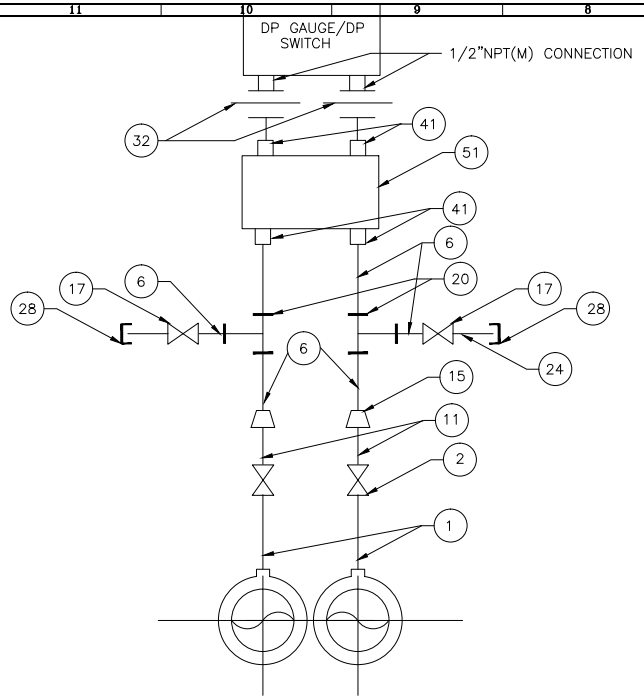

FIG–A

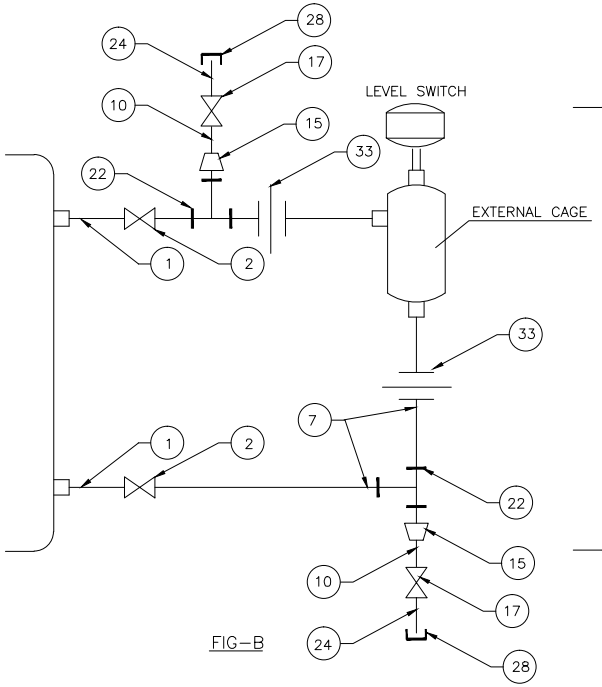

FIG–B

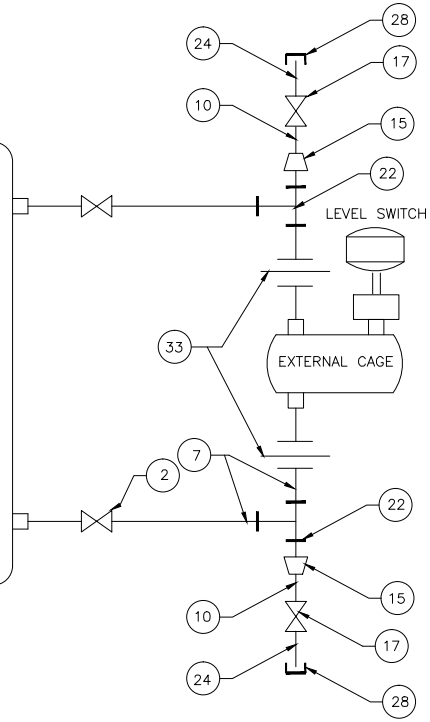

FIG–C

TAG NO.	DESCRIPTION	A	B	C
		QTY.		
78	1/2" NPT(F) X 1/2" NPT(M) SNUBBER/PULSATION DAMPNER	1	–	–
51	5 VALVE MANIFOLDS, SS–316	–	–	–
41	1/2" NPT(M) X 1/2" OD TUBE COMPRESSION FITTING,SS–316	–	–	–
38	3 WAY GAUGE VALVE 1/2"NB SW	1	–	–
33	1" SW EQUAL PIPE UNION	–	2	2
32	1/2" NPS,3 PIECE PIPE UNION 1/2" NPT(F) SCREWED AND 1/2" SW CONNECTION	1	–	–
28	1/2" NPT(F) CS. CAP	1	2	2
24	1/2" NPS,SCH 80/160 X 1/2" NPT(M) CS/AS NIPPLE	1	2	2
22	1" SW EQUAL TEE CS/AS	–	1	2
20	1/2"SW EQUAL TEE CS/AS	1	–	–
17	1/2" SW,CS/AS, GLOBE VALVE	1	2	2
15	1" TO 1/2" SOCKET WELD REDUCER	1	2	2
11	1"NPS SCH 80/160 CS/AS NIPPLE	1	–	–
10	1/2"NPS,SCH 80/160 CA/AS NIPPLE	–	2	2
6	1/2"NPS,SCH 80/160 CARBON/ALLOY STEEL PIPE	AS REQD.		
7	1" NPS,SCH 80/160 CS/AS STEEL PIPE	AS REQD.		
2	1/2"3/4"/1" ROOT VALVE – SW GLOBE VALVE	2	2	2
1	1/2"/3/4"/1" CARBON/ALLOY STEEL NIPPLE OF MTL SAME AS THAT OF MAIN PIPE (AS PER PROCESS REQD.)	AS REQD.		

NOTE:–
WITH VALVE OF SIZE 1/2"SW NIPPLE PIECE IS NOT REQUIERED

REFERENCE DRAWINGS.

NOTES

1. DO NOT SCALE, ASK WHEN IN DOUBT.
2. ALL DIMENSIONS ARE IN MILIMETRES UNLESS NOTED OTHERWISE.
3. ABOVE DRWING IS FOR BASIC GUIDE LINE TO BE MEET BY BIDDER, ANY FURTHER IMPROVEMENT DURING DETAILED ENGINEERING SHALL ALSO BE CONFIRMED/PROVIDED BY CONTRACTOR.
4. QUANTITIES OF INSTRUMENTS/ ERECTION HARDWARE SHALL BE AS PER NIT AND AS FINALISED DURING DETAIL ENGINEERING
5. FOR DM PLANT MATERIAL OF ERECTION HARDWARE SHALL BE SS 316 ONLY.

NOTICE

THIS DRAWING IS THE PROPERTY OF DESEIN PRIVATE LIMITED, NEW DELHI, AND IS LENT SUBJECT TO THE CONDITION THAT IT SHALL NOT BE REPRODUCED, COPIED, LENT OR OTHERWISE DISPOSED OF, DIRECTLY OR INDIRECTLY. IT SHALL NOT BE USED TO FURNISH ANY INFORMATION FOR THE MAKING OF DRAWINGS, APPARATUS, OR PARTS THEREOF EXCEPT FOR THE PROJECT SPECIFICALLY PROVIDED FOR BY CONTRACT AGREEMENT WITH DESEIN.

ZONE	MARK	PARTICULARS	DATE	CIVIL	MECH.	ELEC.	C&I	H.O.D.
	A	PRELIMINARY	25.04.13				SLN	

REVISIONS | APPROVED

SR. No. PARTY — PRINT DISTRIBUTION

DESEIN
CONSULTING ENGINEERS
NEW DELHI – INDIA

CLIENT: TAMILNADU GEN. & DIST. CORPORATION

PROJECT: 2x660MW ENNORE SEZ COAL BASED SUPERCRITICAL THERMAL POWER PROJECT AT ASH DYKE OF NCTPS, CHENNAI

TITLE :– INST. DRAWING FOR DIFF. PRESS. SWITCH/GAUGE/LEVEL SWITCHES

FOR BID PURPOSE ONLY

	NAME	SIGN.	DATE
CAD/DRAWN	VIKAS		23.04.13
DESIGNED	SKM/SN		23.04.13
CHECKED	S.K.M.		24.04.13
SCALE	N.T.S.		
JOB. No.	D–4027		
DWG.No.	114–04–0108		REV. 0

Sheet No. 11 of 19

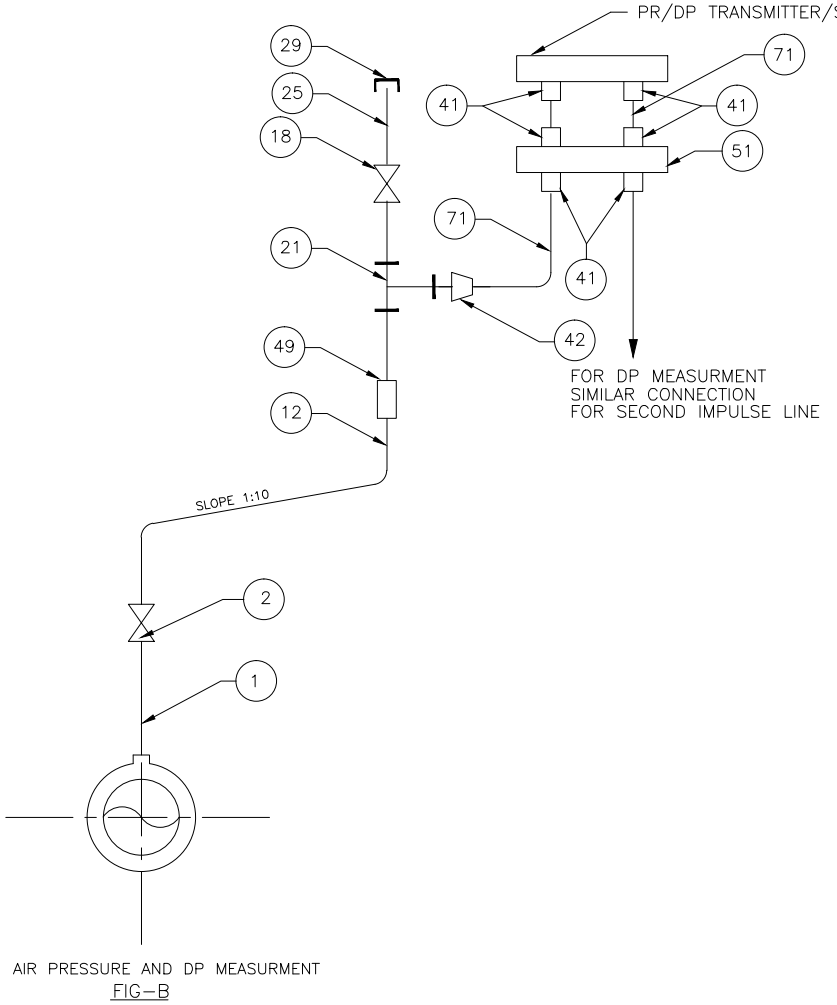

AIR PRESSURE AND DP MEASURMENT
FIG–B

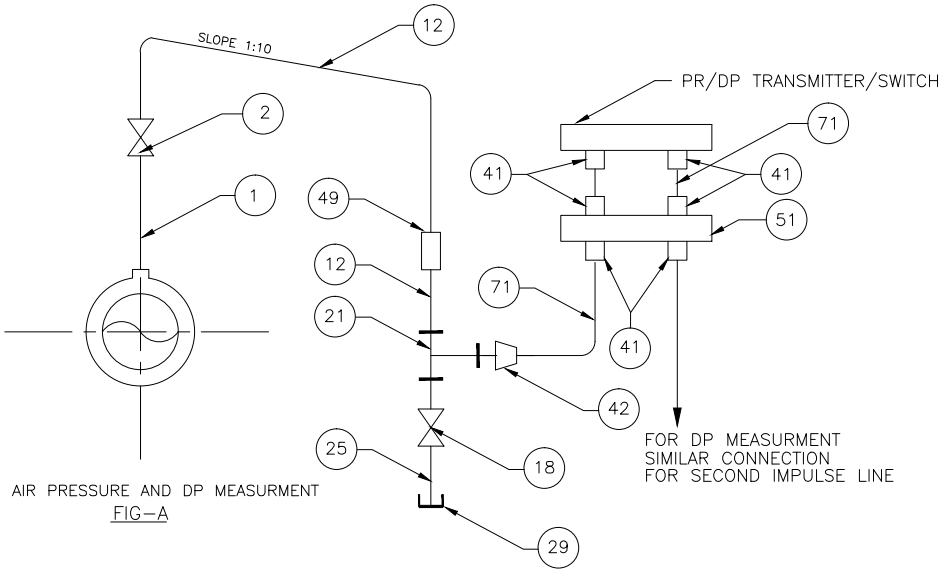

AIR PRESSURE AND DP MEASURMENT
FIG–A

TAG NO.	DESCRIPTION	A	B
		QTY.	
71	1/2"OD IMPULSE TUBE,SS–316	AS REQD.	
51	5/3/2–VALVE MANIFOLDS,SS–316	1	1
49	3/4"SW,CS/AS BULK HEAD PIPE UNION	1	1
42	3/4"BW X 1/2"OD TUBE FITTING,SS–316	1	1
41	1/2"NPT(M) X 1/2"00 TUBE COMPRESSION FITTING,SS–316	6	6
29	3/4"NPT(F) CS CAP	1	1
25	3/4"NPS,SCH–80 X 3/4"NPS(M)CS NIPPLE	1	1
21	3/4" EQUAL TEE,CS	1	1
18	3/4" SW,CS GLOBE VALVE	–	1
12	3/4" NPS. SCH–80 CARBON STEEL PIPE	AS REQD.	
2	1/2"/3/4"/1" ROOT VALVE – SW GLOBE VALVE	1	1
1	1/2"/3/4"/1" CARBON/ALLOY STEEL NIPPLE OF MTL. SAME AS THAT OF MAIN PIPE(AS PER PROCESS REQD.)	AS REQD.	

BILL OF MATERIAL

NOTE:–
QUANTITY IN COLUMN A&B TO BE DOUBLED
FOR DP TAPPING EXCEPT ITEM NO. 51

REFERENCE DRAWINGS.

NOTES
1. DO NOT SCALE, ASK WHEN IN DOUBT.
2. ALL DIMENSIONS ARE IN MILIMETRES UNLESS NOTED OTHERWISE.
3. ABOVE DRWING IS FOR BASIC GUIDE LINE TO BE MEET BY BIDDER, ANY FURTHER IMPROVEMENT DURING DETAILED ENGINEERING SHALL ALSO BE CONFIRMED/PROVIDED BY CONTRACTOR.
4. QUANTITIES OF INSTRUMENTS/ ERECTION HARDWARE SHALL BE AS PER NIT AND AS FINALISED DURING DETAIL ENGINEERING
5. FOR DM PLANT MATERIAL OF ERECTION HARDWARE SHALL BE SS 316 ONLY.

NOTICE
THIS DRAWING IS THE PROPERTY OF DESEIN PRIVATE LIMITED, NEW DELHI, AND IS LENT SUBJECT TO THE CONDITION THAT IT SHALL NOT BE REPRODUCED, COPIED, LENT OR OTHERWISE DISPOSED OF, DIRECTLY OR INDIRECTLY. IT SHALL NOT BE USED TO FURNISH ANY INFORMATION FOR THE MAKING OF DRAWINGS, APPARATUS, OR PARTS THEREOF EXCEPT FOR THE PROJECT SPECIFICALLY PROVIDED FOR BY CONTRACT AGREEMENT WITH DESEIN.

ZONE	MARK	PARTICULARS	DATE	CIVIL	MECH.	ELEC.	C&I	H.O.D.
	A	PRELIMINARY	25.04.13				SLN	

REVISIONS | APPROVED

SR. No. PARTY
PRINT DISTRIBUTION

DESEIN
CONSULTING ENGINEERS
NEW DELHI – INDIA

CLIENT: TAMILNADU GEN. & DIST. CORPORATION
PROJECT: 2x660MW ENNORE SEZ COAL BASED SUPERCRITICAL THERMAL POWER PROJECT AT ASH DYKE OF NCTPS, CHENNAI.
TITLE :– INST. DRAWING FOR PRESS. & DIFF. PRESS. TRANSMITTERS/SWITCH (AIR SERVICE)
FOR BID PURPOSE ONLY:

	NAME	SIGN.	DATE
CAD/DRAWN	VIKAS		23.04.13
DESIGNED	SKM/SN		23.04.13
CHECKED	S.K.M.		24.04.13
SCALE	N.T.S.		
JOB. No.	D–4027		
DWG.No.	114–04–0103		REV. 0

Sheet No. 5 of 19

NOTE:–

1. FOR HIGH TEMP. SERVICE (MORE THAN °80C) A 'U'–TUBE / SYPHON (REF. DWG NO. IN–114–04–0100)SHALL BE PROVIDED BETWEEN THE MANIFOLD AND THE TRANSMITTER/SWITCH
2. WITH ROOT VLV. OF SIZE 1/2"SW NIPPLE PIECE AND 1 TO 1/2"SW REDUCER IS NOT REQUIERED
3. FOR HIGH PR.(MORE THAN 40Kg/sqcm) ONE ISOLATING VLV. IS PROVIDED IN EACH LINE BETWEEN VLV. MANIFOLD AND 1/2"SW EQUAL TEE AND 2.NOS DRAIN VLV. ARE ALSO PROVIDED.

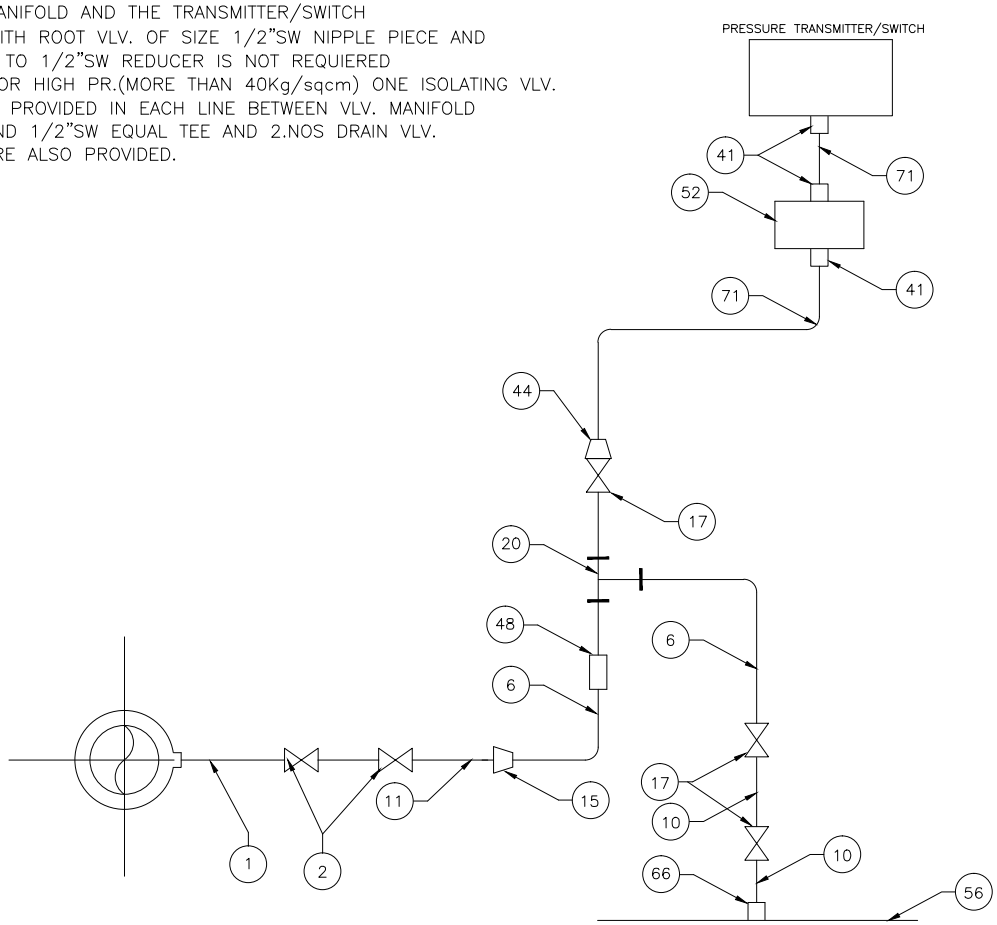

TRANSMITTER MOUNTED ABOVE INSTRUMENT SOURCE POINT

FIG–D

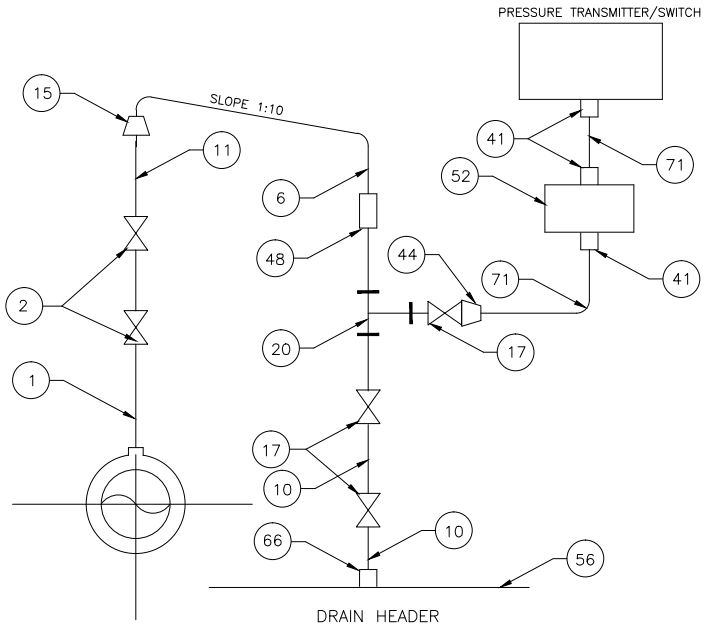

TRANSMITTER MOUNTED ABOVE INSTRUMENT SOURCE POINT

FIG–C

TAG NO.	DESCRIPTION	C	D
		QTY.	
71	1/2"OD IMPULSE TUBE,SS–316	AS REQD.	
66	1/2" GI SOCKET	1	1
56	2"NB GI DRAIN HEADER		
52	5/3/2–VALVE MANIFOLDS,SS–316	1	1
48	1/2"SW,CS/AS BULK HEAD PIPE UNION	1	1
44	1/2"BW X 1/2"OD COMRESSION TUBE FITTING,SS–316	1	1
41	1/2"NPT(M) X 1/2"00 TUBE COMPRESSION FITTING,SS–316	3	3
20	1/2"SW EQUAL TEE,CS	1	1
17	1/2" SW,CS GLOBE VALVE / NEEDLE VALVE	3	3
15	1" TO 1/2" SW REDUCER	1	1
11	1" NPS SCH–80 CS/AS NIPPLE	1	1
10	1/2" NPS,SCH 80/160, CS/AS NIPPLE	2	2
6	1/2" NPS. SCH–80/160 CS/ AS PIPE	AS REQD.	
2	1/2"/3/4"/1" ROOT VALVE	2	2
1	1/2"/3/4"/1" CARBON/ALLOY STEEL NIPPLE OF MTL. SAME AS THAT OF MAIN PIPE(AS PER PROCESS REQD.)	AS REQD.	

BILL OF MATERIAL

REFERENCE DRAWINGS.

NOTES

1. DO NOT SCALE, ASK WHEN IN DOUBT.
2. ALL DIMENSIONS ARE IN MILIMETRES UNLESS NOTED OTHERWISE.
3. BULK HEAD FITTING SW TYPE SHALL BE PROVIDED AT LIE/LIR
4. ABOVE DRWING IS FOR BASIC GUIDE LINE TO BE MEET BY BIDDER, ANY FURTHER IMPROVEMENT DURING DETAILED ENGINEERING SHALL ALSO BE CONFIRMED/PROVIDED BY CONTRACTOR.
5. QUANTITIES OF INSTRUMENTS,/ ERECTION HARDWARE SHALL BE AS PER NIT AND AS FINALISED DURING DETAIL ENGINEERING
6. FOR DM PLANT MATERIAL OF ERECTION HARDWARE SHALL BE SS 316 ONLY.

NOTICE

THIS DRAWING IS THE PROPERTY OF DESEIN PRIVATE LIMITED, NEW DELHI, AND IS LENT SUBJECT TO THE CONDITION THAT IT SHALL NOT BE REPRODUCED, COPIED, LENT OR OTHERWISE DISPOSED OF, DIRECTLY OR INDIRECTLY, IT SHALL NOT BE USED TO FURNISH ANY INFORMATION FOR THE MAKING OF DRAWINGS, APPARATUS, OR PARTS THEREOF EXCEPT FOR THE PROJECT SPECIFICALLY PROVIDED FOR BY CONTRACT AGREEMENT WITH DESEIN.

ZONE	MARK	REVISIONS	DATE	CIVIL	MECH.	ELEC.	C&I	H.O.D.
	A	PRELIMINARY	25.04.13				SLN	

APPROVED

DESEIN
CONSULTING ENGINEERS
NEW DELHI – INDIA

CLIENT: TAMILNADU GEN. & DIST. CORPORATION

PROJECT: 2x660MW ENNORE SEZ COAL BASED SUPERCRITICAL THERMAL POWER PROJECT AT ASH DYKE OF NCTPS, CHENNAI.

TITLE :– INST. DRAWING FOR PRESS. & DIFF.PRESS. TRANSMITTERS/SWITCH (STEAM & LIQUID SERVICE)

FOR BID PURPOSE ONLY:

	NAME	SIGN.	DATE
CAD/DRAWN	VIKAS		23.04.13
DESIGNED	SKM/SN		23.04.13
CHECKED	S.K.M.		24.04.13
SCALE	N.T.S.		
JOB. No.	D–4027		
DWG.No.	114–04–0104		REV. 0

Sheet No. 7 of 19

SR. No. PARTY
PRINT DISTRIBUTION

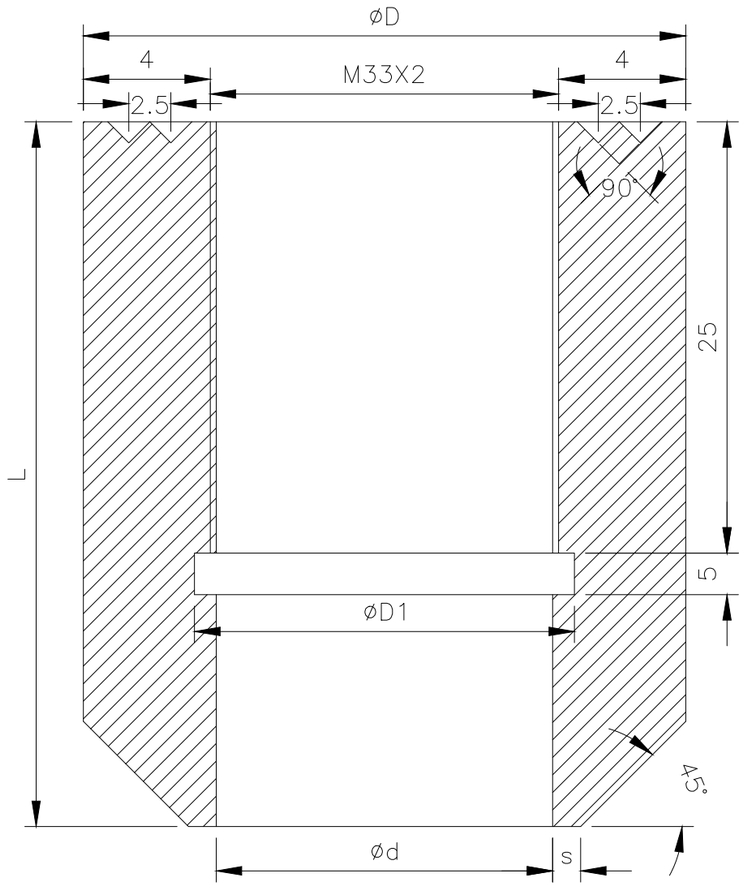

TEMPERATURE STUB FOR STRAIGHT IMMERSION

FOR PIPE OD BELOW 219.1mm	29	55	33.5	1.5	65
FOR PIPE OD 219.1mm & ABOVE	29	55	33.5	1.5	45
MAIN PIPE SIZES	d	D	D1	S	L

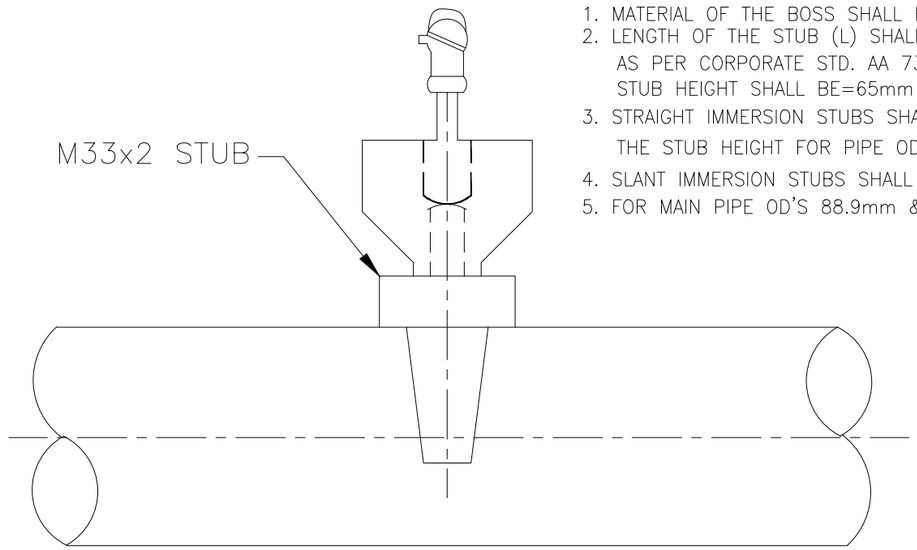

INSTALLATION TYPE-1

(FOR MAIN PIPE OD 168.3mm & ABOVE)

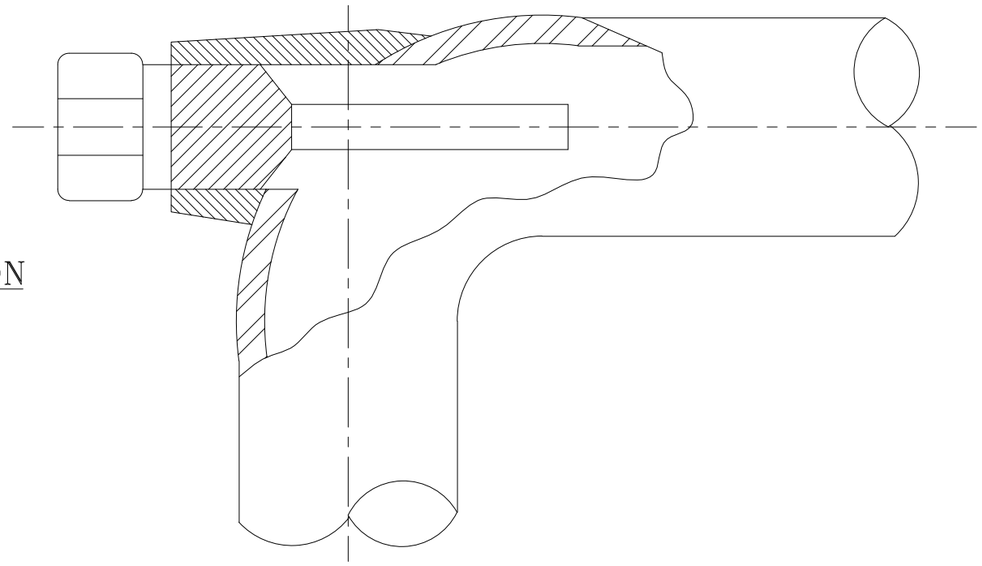

INSTALLATION TYPE-2

(FOR MAIN PIPE OD 88.9mm & BELOW)

NOTE :-

1. MATERIAL OF THE BOSS SHALL BE THE SAME AS THE PIPE INTO WHICH IT IS WELDED.
2. LENGTH OF THE STUB (L) SHALL BE 65/45 mm DEPENDING UPON PIPE SIZE, AS PER CORPORATE STD. AA 7326102.(FOR PIPE OD 88.9mm TO 159mm STUB HEIGHT SHALL BE=65mm & FOR PIPE OD >219.1mm STUB HEIGHT SHALL BE=45mm)
3. STRAIGHT IMMERSION STUBS SHALL BE USED FOR PIPE OD'S 168.3mm & ABOVE. THE STUB HEIGHT FOR PIPE OD, 168.3mm TO <219.1mm SHALL BE 65mm.
4. SLANT IMMERSION STUBS SHALL BE USED FOR PIPE OD'S 88.9mm TO 159mm.
5. FOR MAIN PIPE OD'S 88.9mm & bELOW SUITABLE EXPANDER SHALL BE USED.

REFERENCE DRAWINGS.

NOTES

1. DO NOT SCALE, ASK WHEN IN DOUBT.
2. ALL DIMENSIONS ARE IN MILIMETRES UNLESS NOTED OTHERWISE.
3. BULK HEAD FITTING SW TYPE SHALL BE PROVIDED AT LIE/LIR
4. ABOVE DRWING IS FOR BASIC GUIDE LINE TO BE MEET BY BIDDER, ANY FURTHER IMPROVEMENT DURING DETAILED ENGINEERING SHALL ALSO BE CONFIRMED/PROVIDED BY CONTRACTOR.
5. QUANTITIES OF INSTRUMENTS/ ERECTION HARDWARE SHALL BE AS PER NIT AND AS FINALISED DURING DETAIL ENGINEERING
6. FOR DM PLANT MATERIAL OF ERECTION HARDWARE SHALL BE SS 316 ONLY.

NOTICE

THIS DRAWING IS THE PROPERTY OF DESEIN PRIVATE LIMITED, NEW DELHI, AND IS LENT SUBJECT TO THE CONDITION THAT IT SHALL NOT BE REPRODUCED, COPIED, LENT OR OTHERWISE DISPOSED OF, DIRECTLY OR INDIRECTLY. IT SHALL NOT BE USED TO FURNISH ANY INFORMATION FOR THE MAKING OF DRAWINGS, APPARATUS, OR PARTS THEREOF EXCEPT FOR THE PROJECT SPECIFICALLY PROVIDED FOR BY CONTRACT AGREEMENT WITH DESEIN.

ZONE	MARK	PARTICULARS	DATE	CIVIL	MECH.	ELEC.	C&I	H.O.D.
	A	PRELIMINARY	25.04.13				SLN	

REVISIONS | APPROVED

SR. No. PARTY — PRINT DISTRIBUTION

SELF - RELIANCE IN ENGINEERING — DESEIN

DESEIN
CONSULTING ENGINEERS
NEW DELHI – INDIA

CLIENT: TAMILNADU GEN. & DIST. CORPORATION

PROJECT: 2x660MW ENNORE SEZ COAL BASED SUPERCRITICAL THERMAL POWER PROJECT AT ASH DYKE OF NCTPS, CHENNAI.

TITLE :- INST. DRAWING FOR TEMPERATURE STUB

FOR BID PURPOSE ONLY:

	NAME	SIGN.	DATE
CAD/DRAWN	VIKAS		23.04.13
DESIGNED	SKM/SN		23.04.13
CHECKED	S.K.M.		24.04.13
SCALE	N.T.S.		

JOB. No. D-4027

DWG.No. 114-04-0111 — REV. 0

Sheet No. 14 of 19

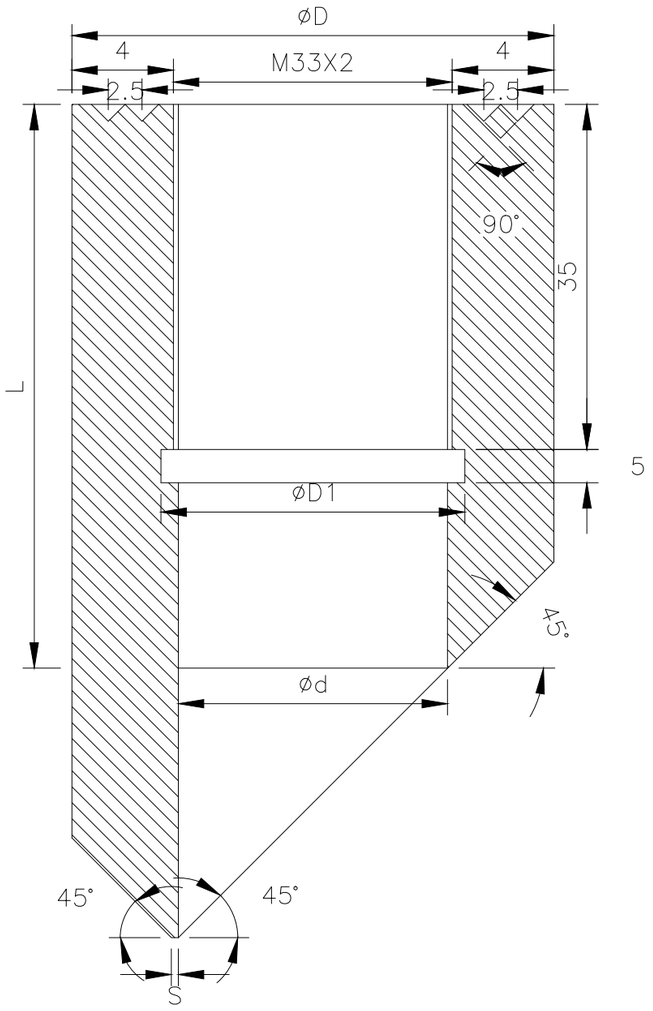

TEMPERATURE STUB FOR SLANT IMMERSION

FOR PIPE OD BELOW 219.1mm	29	55	33.5	1.5	65
FOR PIPE OD 219.1mm & ABOVE	29	55	33.5	1.5	45
MAIN PIPE SIZES	d	D	D1	S	L

NOTE :–

1. MATERIAL OF THE BOSS SHALL BE THE SAME AS THE PIPE INTO WHICH IT IS WELDED.
2. LENGTH OF THE STUB (L) SHALL BE 65/45 mm DEPENDING UPON PIPE SIZE, AS PER CORPORATE STD. AA 7326102.(FOR PIPE OD 88.9mm TO 159mm STUB HEIGHT SHALL BE=65mm & FOR PIPE OD >219.1mm STUB HEIGHT SHALL BE=45mm)
3. STRAIGHT IMMERSION STUBS SHALL BE USED FOR PIPE OD'S 168.3mm & ABOVE. THE STUB HEIGHT FOR PIPE OD, 168.3mm TO <219.1mm SHALL BE 65mm.
4. SLANT IMMERSION STUBS SHALL BE USED FOR PIPE OD'S 88.9mm TO 159mm.
5. FOR MAIN PIPE OD'S 88.9mm & bELOW SUITABLE EXPANDER SHALL BE USED.

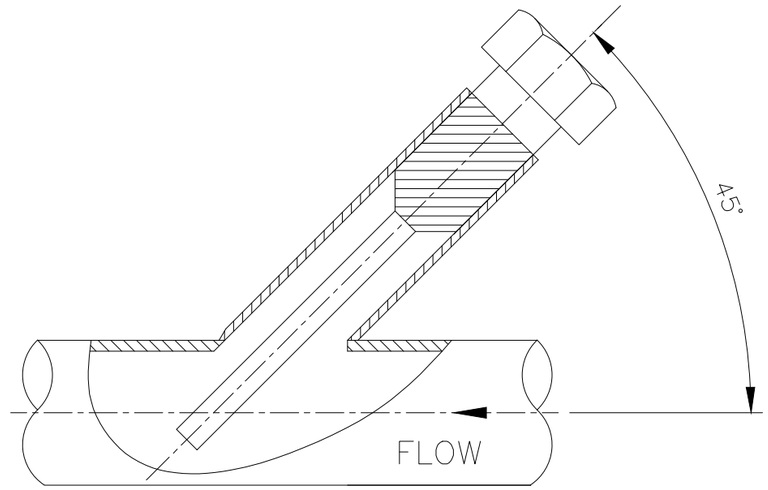

INSTALLATION TYPE–3

(FOR MAIN PIPE OD 88.9mm TO 159mm)

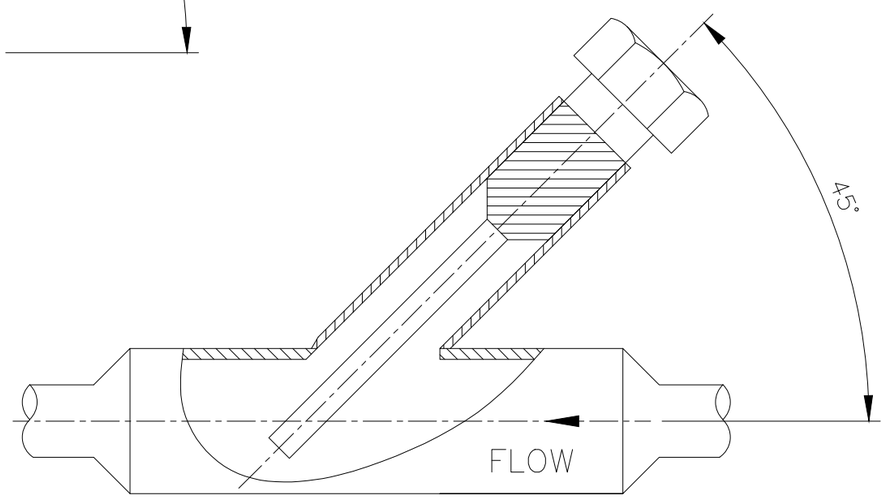

INSTALLATION TYPE–4

(FOR MAIN PIPE OD 88.9mm & BELOW)

REFERENCE DRAWINGS.

NOTES

1. DO NOT SCALE, ASK WHEN IN DOUBT.
2. ALL DIMENSIONS ARE IN MILIMETRES UNLESS NOTED OTHERWISE.
3. BULK HEAD FITTING SW TYPE SHALL BE PROVIDED AT LIE/LIR
4. ABOVE DRWING IS FOR BASIC GUIDE LINE TO BE MEET BY BIDDER, ANY FURTHER IMPROVEMENT DURING DETAILED ENGINEERING SHALL ALSO BE CONFIRMED/PROVIDED BY CONTRACTOR.
5. QUANTITIES OF INSTRUMENTS/ ERECTION HARDWARE SHALL BE AS PER NIT AND AS FINALISED DURING DETAIL ENGINEERING
6. FOR DM PLANT MATERIAL OF ERECTION HARDWARE SHALL BE SS 316 ONLY.

NOTICE

THIS DRAWING IS THE PROPERTY OF DESEIN PRIVATE LIMITED, NEW DELHI, AND IS LENT SUBJECT TO THE CONDITION THAT IT SHALL NOT BE REPRODUCED, COPIED, LENT OR OTHERWISE DISPOSED OF, DIRECTLY OR INDIRECTLY, IT SHALL NOT BE USED TO FURNISH ANY INFORMATION FOR THE MAKING OF DRAWINGS, APPARATUS, OR PARTS THEREOF EXCEPT FOR THE PROJECT SPECIFICALLY PROVIDED FOR BY CONTRACT AGREEMENT WITH DESEIN.

SR. No. PARTY
PRINT DISTRIBUTION

ZONE	MARK	PARTICULARS	DATE	CIVIL	MECH.	ELEC.	C&I	H.O.D.
	6							
	5							
	4							
	3							
	2							
	1							
	0							
	A	PRELIMINARY	25.04.13				SLN	

REVISIONS — APPROVED

DESEIN
CONSULTING ENGINEERS
NEW DELHI – INDIA

CLIENT: TAMILNADU GEN. & DIST. CORPORATION

PROJECT: 2x660MW ENNORE SEZ COAL BASED SUPERCRITICAL THERMAL POWER PROJECT AT ASH DYKE OF NCTPS, CHENNAI.

TITLE :– INST. DRAWING FOR TEMPERATURE STUB

FOR BID PURPOSE ONLY:

	NAME	SIGN.	DATE
CAD/DRAWN	VIKAS		23.04.13
DESIGNED	SKM/SN		23.04.13
CHECKED	S.K.M.		24.04.13
SCALE	N.T.S.		
JOB. No.	D–4027		
DWG.No.	114–04–0111		REV. 0

Sheet No. 15 of 19

ERECTION HARDWARE

CHAPTER-9

ERECTION HARDWARE

9.00.00 PROCESS CONNECTION AND PIPING

9.00.01 General Requirements

This section covers the material requirement for instrument connection to process, instrument process, piping, tubing, supports, Instrumentation cables, control cables and power cables for connecting UPS, 24/48 V DC, unregulated power supply for cubicle illumination, compensating cables/Extension cables, transmitter racks and main accessories to be furnished under this specification and the requirements of installation and routing. Impulse lines, fittings and other accessories required for the erection of complete Instrumentation and Control System supplied under various packages of this specification shall be supplied on "as required' basis. Bidder shall offer all necessary items for this section based on his experience on similar plants, plant layout diagrams, installation drawings and other applicable sections of this specification. Based on the good engineering practices Bidder shall furnish installation drawings during the engineering of the system for Owner's review and approval .The installation of the drawings shall be suitable for his installation of his range of instrumentation.

The Bidder shall furnish and test all required erection hardware, which is necessary for proper installation and interconnection of the equipment/systems furnished by the Bidder and their integration with main equipment/systems as per the enclosed installation drawings and other applicable clause. The Bidder shall furnish all hardware and accessories to ensure that the equipment/systems furnished form a complete and operational system meeting the intent and requirement of this specification.

All materials, furnished shall conform to the latest editions of America National Standard Code for Pressure piping, Power piping, ANSI B311.1, ANSI B16.11, ASME Boiler and Pressure Vessel Codes, IBR and other applicable ASME, ANSI and Indian Standards. Schedule numbers, sizes and dimensions of all carbon steel, stainless steel and alloy seamless steel pipe shall confirm to ANSI B.36.10 and of stainless steel pipe shall confirm to ANSI B 36.19 unless otherwise specified.

All materials supplied under this section shall be suitable for intended service; process operating conditions and type of instruments used and shall fully conform to the requirements of this specification.

The Bidder is responsible for the performance of the equipment furnished on system basis any shortfall in erection material observed during erection stage shall be compensated by the Bidder at no extra cost. (Installation drawings # 114-04-0000, 0100 to 0113 shall also be referred by bidder).

9.01.00 GUIDLINE FOR INSTALLATION AND ROUTING OF INSTRUMENT PIPING

9.01.01 General Requirements

The following general erection guidelines have been enumerated here to enable the Bidder to estimate the requirement of instrument piping in plant:-

i) All instrument piping shall be in accordance with good engineering practice. It shall be finalized during engineering stage. Instrument piping shall be complete with fittings, valves and other required accessories.

ii) Instrument piping shall not be routed:-

a) Across equipment removal areas
b) Below mono-rails and cranes
c) Above or below removable gratings
d) Above or below cable trays.

iii) Primary Impulse Piping System:

a) The primary impulse piping system shall include the instrument piping and all required accessories from process tap off point (root valves onwards) up to the respective instruments. From the same source, Tee off for instruments are not allowed. Separate tapping shall be provided for each instrument. The Bidder shall provide the necessary fittings and accessories along with impulse pipes for completeness and arrangements as per the finalized Instrument Installation Diagrams. Special accessories such as reservoirs and other devices shall be installed as required for flow primary element connection as required by the design of instruments, in accordance with the instructions of the instrument manufacturer.

b) The Bidder shall prepare impulse pipe routing drawings.

c) Impulse piping shall include a blow-down line and shut-off valve adequate for the duty requirements and for withstanding continuous design pressure and temperature of process medium. For process pressure above 40 Kg/Cm^2g, double valves shall be used before connecting to the blow-down header (This arrangement shall be provided for installation for the new transmitter if the existing transmitter has the same arrangement.)

d) To assure a constant static head the connections from low pressure steam and low pressure liquid filled lines should preferably slope downward continuously towards the instrument as the instrument is mounted below the source point. If downward slope is not feasible or the instrument is mounted above the source point, the line should slope upward continuously and a “pigtail” installed at the instrument to assure a water seal for temperature protection. Upward sloping liquid lines should be used only if the process pressure is sufficient to assure a head of liquid at the instrument. Horizontal runs should have a slope of not less than 40 mm per meter and must be adequately supported to maintain a constant slope. Vacuum connections to the condenser should always slope upward to the instrument.

e) Primary process piping for steam flow, liquid flow and manometric level measurement systems should preferably slope downward from the primary element connections to the instrument. Primary piping for flue gas and air flow measurement systems should preferably slope upward from

the primary element connections to the instrument. If these requirements cannot be met, special venting or drain provisions will be required. Horizontal runs must have a slope of not less than 40 millimeters per meter and must be adequately supported to maintain a constant slope.

f) Primary process piping from the field which enters the instrument enclosure from the bottom shall extend into the enclosure approximately 150 millimeters and be equipped with a socket weld to flare less tubing coupling of stainless steel. This coupling shall be used to connect the field primary process line to the enclosure process line. The field primary process line shall be anchored to the enclosure angle with U-bolts. Holes for supporting U-bolts shall be field or drilled.

g) All impulse piping shall be supported rigidly at an interval not exceeding 1.5 meters so as to prevent excessive sag in piping. Process piping shall not be used for supporting impulse piping.

h) Impulse lines subject to severe sonic pulsations such as boiler feed pump discharge, shall be of sufficient length and of suitable configuration to scatter harmful sonic wave energy before it reaches the instrument.

i) Impulse piping shall be installed to permit thermal expansion without placing excessive stress on the piping and without affecting the gradient of slope. Long continuous straight runs of piping shall always be avoided. If required, expansion loops shall be provided at least every 2.5 meters to break the continuity.

j) All welded and screwed fittings shall conform to ANSI B16.11. Threads of piping components shall be taper pipe thread in accordance with ANSI B2.1. All threads shall be clean machine cut with all burrs and chips removed. Lubricants shall be of dry filc type. Any one of the following compounds may be used as a pipe thread sealer. Bidder shall supply adequate amount of his preferred sealer for erection purpose.

a) Permatex
b) Molycote
c) Neolube

(Teflon tape shall not be used as a pipe thread sealer).

9.01.02 Impulse Piping System

Impulse piping system consists of primary impulse pipes/tubes, valves, fittings, valve manifolds and other accessories between the source connection point (source shut-off valve onwards) and all instruments/devices. Impulse pipe span for supporting clamp shall be 1.5 mtr. This will also include all piping and valves etc. required for instrument drain and vent connections. The Bidder shall furnish and test all items required for completeness of this specification.

9.01.03 AIR SUPPLY PIPING

The piping for air supply shall be as specified below (However the Bidder shall supply the materials as required basis to complete the system in all respect)

i) Individual Supply Lines and Control Signal Lines:-

Air lines shall be ¼ inch size, connected by brass/SS316 flare less tubing fittings. Copper/SS316 tubing shall be light drawn tampered tubing conforming to ATM B75 except copper tubing in tubing cables shall be annealed soft temper tubing conforming to ASTM B68 or B75. Fittings on the branch line to facilitate connections to the individual supply line shall be cast brass screwed type.

ii) Flexible Hoses:-

Flexible hoses shall be ¼ inch SS flexible hose pipe and with Buna-N liner steel wire braid reinforcement complete with ¼ inch brass/SS316 fittings and shall have swivel male pipe threads. Each hose shall be done meter in length.

iii) Pipe Material Specification:-

The piping material shall be carbon steel hot-dipped galvanized inside and outside as per IS-1239 or the equivalent of these standard heavy quality with screwed ends. The piping threads shall be as per ASA B.2.1.

iv) Isolating Valves:-

Gate valves as per ASTM B62 inside screw rising stem screwed female ends as per ASA B.2.1 valve bonnet shall be union type and trim shall be stainless steel body rating 150 pounds ASA. Valves sizes shall be ½ inch to 2 inch.

v) Fittings:-

Forged cast steel A234 Gr. WPM galvanized inside and outside; screwed as per ASA B2.1 dimensions as per ASA B16.11, rating 2000 pounds, elbows and soft seats. The size of the fittings shall be ½ inch through 2 inch.

vi) Air Filter Regulator Set:-

An instrument Air Filter Regulator Set with mounting assembles shall be provided for each pneumatic device requiring air supply.

vii) Instrument Air Piping System:-

a) Instrument Air shall be made available by the bidder at 3.5 to 7.0 Kg/cm² pressure. The instrument air may be arranged as under:-

11. For the control valves and power cylinders in owner's scope but controlled by bidder's control system, the instrument air requirement for E/P converter shall be tapped from the nearby instrument air header laid by bidder / already laid existing piping with accessories available near the control valves or damper.

Complete hardware required for interfacing with Owner system shall be in bidder scope.

b) Air supply piping shall be installed at site always with a slope of over 1/100 to prevent accumulation of condensed water within the pipe.

c) All joints in the instrument air sub-header shall be of screwed type.

d) Instrument air line shall be separate for each individual instrument, equipment & drive with own isolation valve and other required hardware. Tee off of instrument line for two or more same/similar services instrument, equipment & drive are not acceptable.

e) Instrument air flushing/purging lines shall be provided for Bowl Mill DP, secondary air flow measurement instrument and other all flue gas services instruments etc.

viii) Signal / Control Air Tubing System:-

Necessary tubes with fittings and accessories for output signal from pneumatic instruments mounted in the field and control signals to final control elements shall be covered under this tubing system.

9.02.00 SPECIFICATION FOR ERECTION HARDWARE

The erection hardware shall meet the following specifications:-

	Item	**Specification**
9.02.01	**Impulse Piping**	
i)	High pressure and high temperature services (Medium: Steam & Water and furnace region)	Seamless Alloy Steel piping to ASTM A335 GR.P91/22 (schedule XXS/160 for high pressure & high temperature)
ii)	Low pressure and low temperature services (Medium: Steam & Water)	Seamless carbon steel piping to STM A106, Gr.C
iii)	Low pressure and low temperature services (Air, Flue gas)	ERW carbon steel piping to IS 1239:1973 Heavy class System)
iv)	Steam and water analysis system	Seamless stainless steel piping to ASTM A312 GR. TP-321
v)	Seamless copper tubing	ASTM B-75

9.02.02 **Fittings Double compression type**

i)	Material for socket weld fittings	ASTM A105 ASTM A182, Gr. F22 6000/3000 lbs
ii)	Dimensions of fittings	ANSI B16.11
iii)	Fittings for steam and water analysis.	Gr. F-321

9.02.03 **Valves**

i)	3 – way valves	SS body/forged CS body stellited internals and SW ends as per requirement for 2500 lb/800 lb ASA ratings.
ii)	5- valve manifolds	FAS body/FCS body 316SS stellited internals with NPT(F) SCRD ends for 3000/2500 lb/1500 lb/800 lb ASA ratings. Construction – Single block (Bar stock)
iii)	3-valve manifolds	FAS body/FCS body 316SS stellited internals with NPT(F) SCRD ends for 3000/2500 lb/1500 lb/800 lb ASA ratings. Construction – Single block (Bar stock)
iv)	2-valve manifolds	FCS body, 316SS stellited internals, NPT(F) SCRD ends. Construction – Single block (Bar stock)
v)	Isolation and drain valves	Globe valves with FAS body/FCS body, 316SS stellited internals SW ends for 3000/2500 lb/1500 lb/800 ASA ratings.

9.02.04	Condensation vessels	FAS/FCS body with NPT (F) SCRD connection and vent plugs for 3000/2500/1500/800 lb ASA ratings.
9.02.05	Racks and Associated Equipment	ANSI C83.9-1972
9.02.06	Code for pressure piping, welding and Hydrostatic testing	ANSI B-31.1

9.02.07	Flexible conduits with fittings	Lead coated, paper insulated, heat resistant flexible metallic conduits with necessary fittings.

9.02.08 3 Valve manifold shall be used, wherever Diff Pressure transmitter/switch have been used for pressure measurement.

9.02.09 5 Valve manifold shall be used for Diff. Pressure & Flow measurement Transmitters/Switches.

9.02.10 In addition to above, table # 9.1 shall also be followed for selection of specific erection hard ware as per process requirements.

9.03.00 TRANSMITTER & SWITCHES ENCLOSURES

In general, BTG process transmitters & switches installed at outdoor location and in areas where they are subjected to splashing oil, water, steam etc., shall be mounted in closed type transmitter rack. For other areas (indoor), open type racks may be used for installation of transmitters and process switches. However the actual requirement shall be finalized during detailed Engineering considering following:-

i) Transmitter/Switches enclosures shall be free standing, enclosed type offering protection against dust, moisture and vermin. Enclosures shall be suitable for outdoor installations, in thermal power plants.

ii) The enclosures shall comprise of Galvanized Sheet mounting plate internally. Also external-mounting brackets in Polyamide or Stainless Steel shall be available. Alternatively transmitter enclosures can be glass Fiber Reinforced Polyester (GRP) compression moulded and shall be weather proof.

iii) Instrument piping inside the enclosure shall conform to the specification and in line with typical installation drawings enclosed with the specification.

iv) Blow down header shall be provided inside the enclosure as called for.

v) Bulk head connection shall be provided to receive and terminate the impulse pipes from root valves.

vi) Instrument tubing, fittings and isolation, drain valves shall be to ANSI code for pressure piping. Piping/tubing shall be subject to hydrostatic tests at 1.5 times maximum system pressure.

vii) Support angles shall be provided for valve manifolds, wiring trays etc. Enclosures shall be complete with necessary bulk head fittings, junction boxes, drain header and other accessories as needed on the basis of approved hook up drawings.

viii) Sufficient spacing among adjacent transmitters shall be maintained to offer easy accessibility and operational convenience. The enclosure shall be designed with sizes to suit the grouping and to completely include all the hardware for hooking up

the transmitters to the process on the basis of approved installation diagrams. A maximum of five (5) transmitters are envisaged to be grouped in one enclosure.

x) A minimum of twenty (20) percent spare terminals shall be provided. Only one wire per terminal shall be used on the outgoing side of these blocks (for cable panel). Any common connections required shall be provided on the panel side of the block. All incoming power terminals are to be clearly identified in a manner distinctly different from all other terminals and grouped in a logical pattern.

xi) Chapter no. 6 of this volume shall also be referred for designing of Transmitter/Switches enclosures.

9.04.00 LOCAL INSTRUMENTS, LOCAL BOARDS AND TAPPING POINTS

i) All local gauges as well as sensors, Transmitters and switches any other instruments for parameters like pressure, temperature, level, flow etc for safe and efficient operation of equipment under the scope of specification, shall be provided by bidder as approved by Owner. Such equipment shall be listed by the Bidder detailing the items with the respective functions in service. All field mounted instruments shall be mounted in such a way as not to be affected by vibration & environmental conditions. Racks to mount these instruments shall be furnished by bidder complete with requisite erection hardware, tubings and junction boxes with all terminals of the instruments duly wired complete with cable glands. Groupings of instruments, actual number of racks for instruments and its construction shall be to Owners approval.

ii) Transmitters & Switches provided shall be mounted in transmitter/Switches enclosures to owner's approval. The junction box for electrical connections shall be outside the transmitter enclosures.

iii) All erection hardware required for complete installation/ implementation of entire instrumentation specified is included in bidders scope. Any change in size, type, rating or in quantity deemed necessary during engineering shall be supplied within package price with no additional financial implication to owner.

iv) Bidders scope includes providing counter flanges on pipe lines/ vessels to suit owner arranged flanged devices. Counter flanges shall be complete with gaskets, nuts, bolts and other requisite accessories for proper installation.

v) Separate and independent tapping on equipment/associated piping shall be provided to suit the philosophy of redundant primary sensors. Separate sensors for control and monitoring etc are as decided by Owner. This shall include application such as first stage pressure. Wherever the process value being measured needs to be compensated for temp, pressure variations, the tapping points for such compensating elements shall be provided in requisite number along with the tapping for the process value.

vi) Whereever transmitters & switches are provided, in addition Local gauges shall also be provided by bidder for local field monitoring.

vii) Local instruments and remote sensors & transmitters to be furnished with the equipment shall generally be as indicated herein and as per redundancy criteria indicated elsewhere but not be limited to the following: -

1. <u>Pressure Measurement</u>

i. **Pressure Gauge** for:

a) Shell pressures of all Deaerator, HP and LP heaters and other vessels.
b) Mercury manometers shall be provided during air outlet flows measurement.
c) Bleed steam pressure at extraction point for all turbine extractions and for pressure on drain lines.
d) Pressure gauges at inlets and outlets of condensate extraction pumps, main oil pump, each auxiliary oil pump, AC standby oil pump, DC Emergency oil pump, jacking oil pumps, DM makeup pumps, DMCW pumps, BFP, or any other pumps etc.
Pressure Gauge at outlet of each type of Fan.
e) Lube oil pressure before and after oil coolers, HPT & IPT front seal chamber leak off pressure.
f) MS pressure downstream of ESV, after HPT control valves and after HPT first stage, HRH steams pressure after IV, Gland steam header pressure, HPT exhaust etc.
g) Condensate pressure in condensate pump discharge header, and feed water pressure at inlet and outlet of each LP & HP heaters.
h) LP turbine exhaust pressure and condenser pressure
i) Relay/Lube/Control oil pressure, Drain oil lines pressure.
j) Pressure gauges for vacuum pumps and each pump discharge.
k) Pressure gauge at Instrument and service air header in compressor room and in the field at the main location of instrument/service air header, the pressure gauges shall be provided.
l) Pressure gauges at inlet and outlet of each heat exchanger and cooler.
m) Frame mounted Pressure Gauges (FMG) shall be provided for Main steam Pressure, Feed water pressure to economizer, CRH Steam Pressure, HRH Steam Pressure etc.
n) For condensate storage tank the pressure gauge in terms of 0-10000 mm wc or suitable range having **dial size of 300 mm or bigger size** shall be provided.
o) **U tube manometer with Hg filled for direct measurement of condenser vacuum** shall be provided in the fixed with isolation valve for local indications.
p) Above are the minimum requirements, actual quantities shall be as decided during detailed engineering by owner.
q) Pressure gauge for all BoP packages as decided during detailed engineering by owner.

ii. **Pressure Switches**

a) Pressure switches at condensate Extraction Pump Discharge header, Boiler feed pump, seal water line or any other pumps for alarm (high & low) and interlock purpose.

b) Pressure switches for steam supply to LP/HP heaters.
c) Pressure switches for initiation of turning gear.
d) Pressure switches for control oil, jacking oil and lube oil pressure for all required alarms and interlocks.
e) Steam pressure downstream of ESV, steam pressure after first stage of HPT, gland steam header pressure and suction line from turbine glands to Gland cooler.
f) Pressure switches for condenser vacuum low, very low alarms & interlocks.
g) Condenser water box pressure for alarm interlocks.
h) Pressure switches (low & high) for individual pumps/blowers suction/discharge and discharge header – alarms, interlocks and protection
i) At the main location of instrument air header the pressure low switches shall be provided for alarms in DDCMIS
j) Pressure switches/any other process switch etc. for OLCS / Alarms / Interlocks / Protection. Pressure switches at inlet, outlet of individual pumps and discharge header of pumps for protection and auto start / stop & alarms.
k) Above are the minimum requirements, actual quantities shall be as decided during detailed engineering as per redundancy criteria by owner.
l) Pressure switches for all BoP packages as decided during detailed engineering. by owner.

iii. **Differential Pressure Transmitters, Diff Pressure Switches & Diff. Pressure Gauges**

a) Pressure across strainers and filters.
b) Diff. Pressure Transmitters/switches/Gauges for all BoP packages as decided during detailed engineering by owner.
c) Diff. Pressure Transmitter across condenser on CW lines, Air pre heaters on air & flue gas lines, on PA lines, CEP suction strainers, Feed control station etc.
d) Above are the minimum requirements, actual quantities shall be as decided during detailed engineering as per redundancy criteria by owner.

iv. Pressure Transmitters

a) For all services as mentioned for Pressure gauges & Pressure Switches.
b) Pressure Transmitters at condensate Extraction Pump individual Discharge and discharge header, Boiler feed pump individual Discharge and discharge header, seal water line or any other pumps/fans/HT/LT unidirectional drive for alarm (high & low) and interlock purpose.
c) Pressure transmitter for wind box (Left/Right) & pulverizer seal air fans discharge pressure.
d) Pressure Transmitters as on required basis for monitoring, interlocks & controls as per redundancy criteria and approved by owner.
e) Above are the minimum requirements, actual quantities shall be as decided during detailed engineering as per redundancy criteria and approved by owner.
f) Pressure Transmitters for all BoP packages as decided during detailed engineering by owner.

2. Temperature Measurments:-

The Bidder shall furnish all temperature sensing elements to be installed in their piping. The scope of supply shall include, but not limited to the following: -

i) Duplex RTDs for all bearing, drain oil from bearings, LPT exhaust steam, 3 no's of duplex RTDs each on left and right CW outlet of condenser etc.

ii) 6 no. duplex or 12 no. simplex Embedded temperature detectors for various motor stator windings and duplex RTDs for Motor/Pump bearing temp.

iii) Chromel-alumel surface/other thermocouples for turbine casings, ESV, IV bodies, superheated steam, hot reheat steam piping, steam of first stage HPT, inlet bowl of IPT, steam exhaust of HPT, down stream of ESV and IV, steam in ESVs and IVs, steam admission pipes metal temperatures, HPC, IPC flange metal temperature etc.

iv) For all HP heaters remote monitoring with redundant independent sensors of inlet/outlet temperatures of feed water and extraction steam shall be provided in addition to local gauges.

v) For all LP heaters remote monitoring with redundant independent sensors of inlet/outlet temperatures of feed water and extraction steam shall be provided in addition to local gauges.

iv) Temperature sensors for HP-LP bypass system for measurement as well as for control.

v) Adequate number of temperature Elements shall be furnished to provide initiating contacts for temperature interlocking and trip circuits. The temperature elements shall be provided, but not limited to the following: -

Steam temperature of HPT exhaust, steam temperature after ESV (L&R), IV (L&R), LPT exhaust hood steam, drain oil temperature of all journal bearings and thrust bearing & lube oil header temperatures, thrust bearing of each condensate extraction pump and vacuum pump protection, interlocks.

vi) Metal Temp measurement and steam temp measurement at each super heater & Reheater location.

vii) Temp. Element & Temp gauges at Feed water line to economizer inlet, economizer to steam separator, spray water lines to desuperheaters, Soot blower steam, Soot blower steam drain lines, steam drain lines, Flue gas & air lines etc

viii) Temp. Measurements (Local & remote) for all BoP packages as decided during detailed engineering.

ix) Thermocouples for Temp. above 200 deg C shall be provided by bidder.

x) For plate heat exchangers, spare thermowell provision shall be made at inlet & outlet of ACW & DMCW lines in addition to local & remote temperature monitoring points.

xi) Each ESP Hopper shall be provided with RTDs to control the temperature of ash through Hopper heater.

xii) Temperature gauges.

a) For bearing temperatures AC and DC lube oil pumps, LPT exhaust hood etc.

b) For condensate and feed water at inlet and outlet of HP heaters, Vacuum pumps, LP heaters etc.

c) Steam & water inlet/outlet of LP and HP heaters, steam and air mixture inlet to vacuum pumps, and drain lines etc.
d) Journal/thrust bearing drain oil, lube oil at inlet/outlet of oil coolers, cooling water at inlet and outlet of oil coolers etc.
e) Thrust bearing of each condensate extraction pump.
f) Temp. Gauges at inlet and outlet of each heat exchanger and cooler.
g) Frame mounted Temperature Gauges (FMG) shall be provided for Main steam Temperature, Feed water Temperature to economizer, CRH Steam Temperature, HRH Steam Temperature etc

xiii) Above are the min. requirements, actual quantities shall be as decided during detailed engineering by owner.

3. Level Measurement

i) Level gauges - level gauges for boiler separator, HP heaters, LP heaters, deaerator, drain cooler, gland steam cooler, vacuum tanks, condenser hot well CBD tank, stator water tank, Stator water expansion tank and other pressure vessels, main oil tank and all oil tanks in BTG & BOP package. The level gauges shall be mica shielded steel armoured transparent glass type. Level gauges for condenser hot well shall be provided on both sides.

ii) Level switches for HP/LP heaters, drain cooler, gland steam cooler, condenser hot well, deaerator, main oil tank and other pressure vessels, tanks, sumps etc. The separate switches for high, very high and low levels shall be provided as per interlocks and protection requirements.

External cage mounted magnetic level switches/ displacer type shall be employed for low pressure & low temp. services.

However conductivity type level switches shall be provided for high pressure & high temp services like HP heaters, CRH/HRH drain Pot, Turbine Drains etc.

iii) Level Transmitters (Type as per Owner approval) for open sump/tank/bunker/vessel/heaters.

iv) Level measurement for all BoP packages as decided during detailed engineering.

v) Level switches for OLCS / Alarms / Interlocks / Protection. Level switches for sump/tank level high/normal/ low/very low interlocks.

vi) Each ESP hopper must be provided with 3 nos. level switch (switches 2 nos. for high level and One no. for low level.)

vii) Above are the min. requirements, actual quantities shall be as decided during detailed engineering by owner.

4. Flow Measurements:-

a) Primary Elements: Flow nozzles shall be used for feed water flow and other critical measurements where weld-in construction is required. Flow nozzles shall be made of stainless steel, with three sets of pressure taps installed in the pipe wall where required. One no. spare set of pressure tap shall also be provided on flow nozzle,

wherever required. Installation of flow nozzles and pressure taps shall be made in the pipe fabricator's shop and shall be witnessed by a representative from the flow nozzle manufacturer.

b) Paddle type orifice plates shall be used for other flow measurements where flanged construction and higher pressure loss are acceptable. Orifice plates shall be made of stainless steel. Orifice flanges shall be of the raised face weld neck type with dual sets of taps.

c) Construction and installation of flow nozzles and orifices shall conform to the requirements of ASME Performance Test Code PTC-19.5, and discharge coefficients shall be predicted in accordance with data published in ASME Research Report on Fluid Meters.

d) Airfoil or venturi flow sections, shall be used for measuring boiler combustion airflow.

e) A special high accuracy flow nozzle pipe shall be provided to determine feed water flow to the economizer. This nozzle shall be hydraulically calibrated and utilized for feed water flow control and for turbine testing as described in ASME PTC 6 (latest revision).

f) Orifice plates shall be supplied with carrier rings as per process requirement.

g) Doppler effect type flow meters shall be used for sludge applications.

h) For Raw water, water treatment plant and effluent treatment plant, ultrasonic type flow meters to be used.

i) Secondary Elements: Secondary elements for differential type flow sensors shall be strain gauge or capacitance type differential pressure transmitters. Square root extraction required for the DP transmitters shall be performed electronically in the transmitter itself.

j) HFO/LDO flow meters shall be based on coriolis mass flow technology. Fuel Oil meters shall be provided for fuel oil unloading system and near boiler after day oil tank (at main supply & return lie).

k) Flow nozzles shall be provided for following services in main plant:-

i) Steam flow measurement for BFP Turbines.
ii) Feed water flow measurement
iii) Auxiliary steam flow measurements
iv) HP bypass flow measurements
v) BFP suction flow.
vi) Deaerator water flow measurement
vii) HP heaters drain Flow measurements.

Orifices shall be provided for following services:-

i) Spray water flow measurement

ii) Condensate flow measurements
iii) DM/hotwell makeup to condenser.
iv.) Condensate dump flow to CST
v) Gland Steam Condensate flow measurements

l) For DM water flow & Ash Slurry flows measurements online electromagnetic flow meter shall be used.

m) At CW & ACW pump discharge headers flow transmitters shall be provided (Non Contact ultrasonic Type are preferable). In addition flow measurement shall also be provided for CW water used any where except condenser service.

n) Instrument and Service Air - Vortex/Swirl type Flow meter

o) Flow transmitters for general applications shall be of the differential pressure type

.

p) Flow switches for OLCS / Alarms / Interlocks / Protection.

q) Lubricating oil Flow transmitter/meter with switch shall be provided for Bearing systems of APH, FD, PA, etc.,

r) Sight glasses flapper indication type shall be provided on lube oil cooling water piping as required to ensure indication of fluid flow.

s) On line Fuel flow & velocity measurement facility in each Pulverized Fuel (PF) pipe for each coal pulveriser shall be provided by bidder for accurate, absolute and simultaneous measurement of coal velocity, coal density, coal mass flow rate and air-to-fuel ratio. The equipments shall compromise of sensors working on micro wave technology.

t) In addition to the **conventional triple DP measurement techniques** involving venturi/Airfoil for secondary air flow measurement, One number **Flow measurement** system each on Left side and Right side shall be provided **as redundant/checking measurement for secondary air flow** which could be used in the optimization package.

On line secondary air flow & velocity measurement facility in each on left side & right side shall be provided by bidder for accurate, absolute and simultaneous measurement of air velocity & flow rate. The equipments shall compromise of sensors working on tribo-electric (Correlation technique) technology.

u) Any other flow element/meter required for system shall be finalised as per system requirement and as per approved drawings/documents by owner.

9.05.00 **Process Connections**

The type of instrument source connection shall depend upon the process parameters and the tapping size. The source connection drawings shall be finalised during the engineering stage.

Size of tapping point stub, number and size of root valves for different types of measurements are as follows:

Sl. No.	**Quantity of root valves**	**Size of stub and root valve**	**Service Condition**
Pressure and Differential Pressure Measurement			
(i)	2	25NB	≥ 40 bar(g) OR 425^{0}C
(ii)	1	15NB	< 40 bar(g) AND 425^{0}C.
Level Measurement			
(a)	**Level Gauge & Switch**		
(i)	2	25NB	≥ 40 bar(g) OR 425^{0}C
(ii)	1	25NB	< 40 bar(g) AND 425^{0}C
(b)	**Level transmitter (displacement type)**		
(i)	2	40NB	≥40 bar(g) OR 425^{0}C
(ii)	1	40NB	<40 bar(g) AND 425^{0}C
(c)	**Stand pipe for level measuring instrument**		
(i)	2	80 NB	≥40 bar(g) OR 425^{0}C
(ii)	1	80 NB	< 40 bar(g) AND 425^{0}C
Flow Measurement			
(i)	2	25NB	≥ 40bar(g) OR 425^{0}C
(ii)	1	25NB	< 40 bar(g) AND 425^{0}C
Sampling system measurement (Steam and Water Service)			
(i)	2	25 NB	≥40 bar(g) OR 425^{0}C
(ii)	1	25 NB	< 40 bar(g) AND 425^{0}C

Technical Specifications for C&I Systems-Table-No. 9.1

S.No.	System/Line Description	Piping Class	Impulse Pipe material	Schedule (Size)	Materials for fitting/ valve body	Valve steam material	Rating of Piping Fitting	Pressure Class of valve
1	Main steam, Up steam & down stream of HP bypass and up stream of auxiliary steam pressure reducing valve.	A	ASTM-A335 Gr.P-91/22 (Note-2)	XXS (½ Inch)	Note-3	Note-3	9000lb	3000 SPL
2	BFP discharge/ superheater attemperator/spray to PRDS	B	ASTM-A106 Gr. C	160 (½ Inch)	Note-3	ASTM-A-182 Gr.F6a	6000lb	2500 SPL
3	Reheater attemperator	C	ASTM-A106 Gr. C	160 (½ Inch)	ASTM-A-105	ASTM-A-182 Gr.F6a	6000lb	1500 SPL
4	Hot. Reheat/Down stream of Aux.Steam pressure reducing valve upto desuperheater/flash tank drain manifold, HRH upstream & down stream of LP Bypass valve.	D	ASTM-A335 Gr.P-91/22 (Note-2)	160 (½ Inch)	ASTM-A182 Gr.F-22	Note-3	3000lb	2500 SPL
5	Cold reheat upto Tee-off for HP bypass.	E	ASTM-A335 Gr.P-22	80 (½ Inch)	ASTM-A182 Gr.F-22	ASTM-A-182 Gr.F6a	3000lb	800
6	Cold reheat down steam of Tee-off (HP Bypass)	F	ASTM-A106 Gr. C	80 (½ Inch)	ASTM-A105	ASTM-A-182 Gr.F6a	3000lb	800

7	BFP suction/condensate system/Extraction to LPH/HPH and Extractions to BFPT, Desecrator, auxiliary steam.	G	ASTM-A106 Gr. C, ASTM-A335 Gr.P-11/22	80 (½ Inch)	ASTM-A105	ASTM-A-182 Gr.F6a	3000lb	800
8	Air/Flue gas outside furnace.	M	ASTM-A106 Gr.B/C	80 (3/4 Inch)	ASTM-A105	ASTM-A-182 Gr.F6a	3000lb	800
9	Air flue gas inside furnace	N	ASTM-A335 Gr.P-22	80 (3/4 Inch)	ASTM-A182 Gr.F-22	ASTM-A-182 Gr.F6a	3000lb	800
10.	Purge Air	O	ASTM-A106 Gr.C	80 (3/4 Inch)	ASTM-A105	SS316	3000lb	800
11.	DM Cooling water	P	ASTM-A312 TP 316	80/40 (1/2 Inch)	ASTM – A 182 F 316	SS316	3000lb	800
12.	CW & ACW	Q	ASTM-A106 Gr.C	80 (1/2 Inch)	ASTM-A105	SS316	3000lb	800

Note:-

1). Above requirements are minimum to be complied by bidder. Rating of piping / fittings / valves etc. is subjected to be approved by owner as per the final design pressure & temperature finalized during the detailed engineering, as per ANSI B 31.1.
2). In case temperature is more than 540 deg C, the material shall be P-91 only.
3). Material shall be compatible with that of the impulse pipe material and design parameter.
4). For DM Plant or DM water services, complete erection Hardware material shall be SS316 only.

DRAWING DOCUMENTS DISTRIBUTION SCHEDULE (ANNEXURE-A)

No. of copies required from the contractor after award of the contract.

S.NO.	DESCIPTION	TANGEDCO	DESEIN/ CONSULTANT	BHEL (PEM)	BHEL SITE AND REGION
1	Drawing for approval/ information	5+1S+2CD	5+1S+1CD	2+1S	--
2	Final drawing (APPROVED)	4+1S+3CD	4+1S+3CD	1+1S	10+1S+1CD
4	AS BUILT DRAWINGS	4+1S+3CD	4+1S+3CD	1+1S	10+1S+1CD
5	CD ROM "FINAL DRAWING"	2CD	1-CD	1CD	2CD
6	Type test reports	2+1S	2+1S	---	2+1S
7	O & M Manuals for approval	2+1CD+SS	2+1CD+SS	1+CD+SS	------
8	Final O & M Manuals	4+6CD+SS	4+4CD+SS	1+CD+SS	10+5CD+SS
9	Performance guarantee test reports	2+1S	2+1S	---	2+1S

* Applicable for vendor drawings

CD - Compact Disc (Read Only)

S-SOFT COPY (IN EMAIL/WRENCH).

NOTE: ALL DRGS. SHALL BE PREPARED ON COMPUTER ***AUTOCAD (LATEST VERSION)*** AND OTHER DOCUMENTS (LIKE DATA SHEET ETC.) ON ***MS-OFFICE (LATEST VERSION).*** SOFTWARE. BIDDER NOT COMPLYING WITH THE REQUIREMENT SHALL NOT BE CONSIDERED.

ALREADY APPROVED DOCUMENTS (SUBMITTED BY M/S CWL)

(ANNEXURE-B)

NOTE:

1) BIDDER CAN ALSO GO WITH OTHER MAKE/SUB-VENDOR ITEMS FOR WHICH THE MODIFICATION WORK ON EXISTING CIVIL FOUNDATION TO BE TAKEN CARE BY BIDDER AT SITE.
2) THE MAKE OF ITEMS SHALL BE AS PER ENCLOSED APPROVED SUB VENDOR LIST (**PE-V0-412-164-A034**). HOWEVER, ANY ADDITIONAL SUB-VENDOR REQUIRED THE SAME SHALL BE SUBJECT TO BHEL/CUSTOMER APPROVAL DURING DETAILED ENGINEERING WITHOUT ANY COMMERCIAL/DELIVERY IMPLICATION TO BHEL/CUSTOMER.

Sl. No	Drawing/Document No	Title	Status
1	PE-V0-412-164-A004	P&ID FOR EFFLUENT TREATMENT PLANT	Approved
2	PE-V0-412-164A-A029	CIVIL INPUT DRAWINGS OF ETP AREA SUMPS AND LAMELLA CLARIFIER	Approved
3	PE-V0-412-164A-A002	LAYOUT OF EFFLUENT TREATMENT PLANT	Approved
4	PE-V0-412-164-A034	SUB VENDOR LIST & INSPECTION CRITERIA FOR EFFLUENT TREATMENT PLANT	Approved
5	PE-V0-412-164-A012	QAP FOR SCREW PUMPS WITH MOTOR FOR EFFLUENT TREATMENT PLANT	Approved
6	PE-V0-412-164-A007	TECHNICAL DATA SHEET OF SCREW PUMPS FOR EFFLUENT TREATMENT PLANT	Approved
7	PE-V0-412-164-A016	QAP FOR METERING PUMPS WITH MOTOR FOR EFFLUENT TREATMENT PLANT	Approved
8	PE-V0-412-164-A003	TECHNICAL DATA SHEET OF METERING PUMPS FOR EFFLUENT TREATMENT PLANT	Approved
9	PE-V0-412-164-A043	QAP/ Inspection Checklist for Instruments for ETP	Approved
10	PE-V0-412-164-A001	Electrical load data FOR EFFLUENT TREATMENT PLANT	Approved
11	PE-V0-412-164-A014	QAP FOR VERTICAL/ HORIZONTAL PUMPS WITH MOTOR FOR EFFLUENT TREATMENT PLANT	Approved
12	PE-V0-412-164-A002	YARD PIPING LAYOUT FOR EFFLUENT TREATMENT PLANT	Approved
13	PE-V0-412-164-A013	TECHNICAL DATA SHEET OF VALVES FOR EFFLUENT TREATMENT PLANT	Approved
14	PE-V0-412-164-A023	VALVE SCHEDULE FOR EFFLUENT TREATMENT PLANT	Approved
15	PE-V0-412-164-A024	PG test procedure for ETP	Approved
16	PE-V0-412-164-A018	QAP FOR BLOWERS WITH MOTOR FOR EFFLUENT TREATMENT PLANT	Approved
17	PE-V0-412-164-A028	TECHNICAL DATA SHEET OF BLOWERS FOR EFFLUENT TREATMENT PLANT	Approved
18	PE-V0-412-164-A042	QAP for valves of ETP	Approved
19	PE-V0-412-164-A039	Drive list for ETP	Approved
20	PE-V0-412-164-A030	GA OF Oil Separator	Approved
21	PE-V0-412-164-A033	CABLE TRAY / TRENCH & CONDUIT ROUTING DIAGRAM OF ETP	Approved
22	PE-V0-412-164-A040	CONTROL WRITE UP FOR EFFLUENT TREATMENT PLANT	Approved
23	PE-V0-412-164-A032	PIPING LAYOUT OF ETP AREA	Approved
24	PE-V0-412-164-A019	CABLE SCHEDULE FOR EFFLUENT TREATMENT PLANT	Approved
25	PE-V0-412-164-A021	INSTRUMENT SCHEDULE FOR EFFLUENT TREATMENT PLANT	Pending with customer
26	PE-V0-412-164-A035	GA & WIRING DETAILS OF Junction Box	Re-submission pending.
27	PE-V0-412-164-A038	I/O list for ETP	Pending with customer
28	PE-V0-412-164-A031	GA OF ATMOSPHERIC TANKS FOR EFFLUENT TREATMENT PLANT	Re-submission pending.
29	PE-V0-412-164-A017	GA DRAWINGS OF Chemical house	Re-submission pending.

30	PE-V0-412-164-A015	TECHNICAL DATA SHEET FOR INSTRUMENTS FOR EFFLUENT TREATMENT PLANT	Re-submission pending.
31	PE-V0-412-164-A008	PROCESS DESIGN AND SIZING CALCULATION INCLUDING PRESSURE DROP CALCULATIONS (ETP)	Re-submission pending.
32	PE-V0-412-164-A005	TECHNICAL DATA SHEET OF VERTICAL/ HORIZONTAL PUMPS FOR EFFLUENT TREATMENT PLANT	Re-submission pending.
33	PE-V0-412-164-A029	O& M MANUAL FOR EFFLUENT TREATMENT PLANT	First submission pending.
34	PE-V0-412-164-A041	PIPING ISOMETRIC DRAWING FOR EFFLUENT TREATMENT PLANT	First submission pending.
35	PE-V0-412-164-A045	ENGINEERING BOQ FOR FOR EFFLUENT TREATMENT PLANT	First submission pending.
36	PE-V0-412-164-A046	ERECTION AND COMMISSIONING PROCEDURE FOR EFFLUENT TREATEMENT PLANT	First submission pending.

NOTE:
1) FOR "Re Submission Pending" THE LATEST DRAWING/DOCUMENT ENCLOSED, FURTHER TO BE REVISED BY BIDDER.
2) ENGG BOQ SHOULD BE VERY DETAILED TO COVER 100% OF THE ITEMS (TO THE POSSIBLE EXTEND) SO THAT NO ITEM IS FOUND TO BE UNSUPPLIED DURING ERECTION AND COMMISSIONING.

FIRST ANGLE PROJECTION

ALL DIMENSIONS ARE IN MM

COPY RIGHT AND CONFIDENTIAL BHARAT HEAVY ELECTRICALS LIMITED
The information on this document is the property of BHEL and it must not be used directly or indirectly in any way detrimental to the interest of the company.

UNDER GRAVITY
OILY WASTE FROM TRANSFORMER YARD AREA

RETENTION PIT FOR OILY WASTE FROM TRANSFORMER YARD AREA
CAP.-85m3
M.O.C.-RCC
SIZE-5.0 x 6.0 M
LOCATION - TRANSFORMER YARD AREA UNIT-1

TRANSFOREMR YARD AREA OILY WASTE TRANSFER PUMPS (1W+1S)
QTY :- 1W+1SB
TYPE:- HORIZ. SCREW PUMP
CAP :- 10 CU.M/HR(EACH)
HEAD:- 20 MWC

UNDER GRAVITY
OILY WASTE FROM COAL MILL AREA-1

COAL MILL OILY WASTE SUMP-1; UNIT-1
CAP. -5m3
M.O.C.-RCC
SUMP SIZE - 2.0 x 2.0 M
LOCATION - ESP AREA;UNIT-1

COAL MILL OILY WASTE TRANS.PUMPS (1W+1S)
QTY :- 1W+1SB
TYPE:- HORIZ. SCREW PUMP
CAP :- 5 CU.M/HR(EACH)
HEAD:- 20 MWC

50 NB M.S HVY. CL. PIPE TO IS:1239 115 Rmt

UNDER GRAVITY
OILY WASTE FROM COAL MILL AREA-2

COAL MILL OILY WASTE SUMP-2; UNIT-2
CAP.-5m3
M.O.C.-RCC
SUMP SIZE - 2.0 x 2.0 M
LOCATION - ESP AREA;UNIT-1

COAL MILL OILY WASTE TRANS.PUMPS (1W+1S)
QTY :- 1W+1SB
TYPE:- HORIZ. SCREW PUMP
CAP :- 5 CU.M/HR(EACH)
HEAD:- 20 MWC

50 NB M.S HVY. CL. PIPE TO IS:1239 160 Rmt

UNDER GRAVITY
OILY WASTE FROM TRANSFORMER YARD AREA

RETENTION PIT FOR OILY WASTE FROM TRANSFORMER YARD AREA
CAP.-85m3
M.O.C.-RCC
SIZE - 5.0 x 6.0 M
LOCATION - TRANS. YARD AREA UNIT-2

TRANSFOREMR YARD AREA OILY WASTE TRANSFER PUMPS (1W+1S)
QTY :- 1W+1SB
TYPE:- HORIZ. SCREW PUMP
CAP :- 10 CU.M/HR(EACH)
HEAD:- 20 MWC

50 NB M.S HVY. CL. PIPE TO IS:1239 250 Rmt

OILY WASTE FROM COAL MILL AREA-1
UNDER GRAVITY

COAL MILL OILY WASTE SUMP-1; UNIT-2
CAP.-5m3
M.O.C.-RCC
SUMP SIZE - 2.0 x 2.0 M
LOCATION - ESP AREA;UNIT-1

COAL MILL OILY WASTE TRANS.PUMPS (1W+1S)
QTY :- 1W+1SB
TYPE:- HORIZ. SCREW PUMP
CAP :- 5 CU.M/HR(EACH)
HEAD:- 20 MWC

50 NB M.S HVY. CL. PIPE TO IS:1239 160 Rmt

OILY WASTE FROM COAL MILL AREA-2
UNDER GRAVITY

COAL MILL OILY WASTE SUMP-2; UNIT-2
CAP.-5m3
M.O.C.-RCC
SUMP SIZE - 2.0 x 2.0 M
LOCATION - ESP AREA;UNIT-1

COAL MILL OILY WASTE TRANS.PUMPS (1W+1S)
QTY :- 1W+1SB
TYPE:- HORIZ. SCREW PUMP
CAP :- 5 CU.M/HR(EACH)
HEAD:- 20 MWC

50 NB M.S HVY. CL. PIPE TO IS:1239 270Rmt

UNDER GRAVITY
OILY WASTE FROM POWER HOUSE AREA

POWER HOUSE OILY WASTE OILY SUMP
CAP.-10M3
M.O.C.-RCC
SIZE - 3.6 x 2.0M
LOCATION - POWER HOUSE AREA UNIT-1

POWER HOUSE AREA SERVICE WASTE TRANSFER PUMPS
QTY :- 1W+1SB
TYPE:- HORIZ. SCREW
CAP :- 15 CU.M/HR(EACH)
HEAD:- 20 MWC

50 NB M.S HVY. CL. PIPE TO IS:1239 115 Rmt

UNDER GRAVITY
OILY WASTE FROM TRANSFORMER YARD AREA

RETENTION PIT FOR OILY WASTE FROM TRANSFORMER YARD AREA
CAP.-85m3
M.O.C.-RCC
SIZE - 5.0 x 6.0 M
LOCATION - TRANS. YARD AREA UNIT-2

TRANSFOREMR YARD AREA OILY WASTE TRANSFER PUMPS (1W+1S)
QTY :- 1W+1SB
TYPE:- HORIZ. SCREW PUMP
CAP :- 10 CU.M/HR(EACH)
HEAD:- 20 MWC

50 NB M.S HVY. CL. PIPE TO IS:1239 250 Rmt

OILY WASTE FROM COAL MILL AREA-1
UNDER GRAVITY

COAL MILL OILY WASTE SUMP-1; UNIT-2
CAP.-5m3
M.O.C.-RCC
SUMP SIZE - 2.0 x 2.0 M
LOCATION - ESP AREA;UNIT-1

COAL MILL OILY WASTE TRANS.PUMPS (1W+1S)
QTY :- 1W+1SB
TYPE:- HORIZ. SCREW PUMP
CAP :- 5 CU.M/HR(EACH)
HEAD:- 20 MWC

50 NB M.S HVY. CL. PIPE TO IS:1239 160 Rmt

OILY WASTE FROM COAL MILL AREA-2
UNDER GRAVITY

COAL MILL OILY WASTE SUMP-2; UNIT-2
CAP.-5m3
M.O.C.-RCC
SUMP SIZE - 2.0 x 2.0 M
LOCATION - ESP AREA;UNIT-1

COAL MILL OILY WASTE TRANS.PUMPS (1W+1S)
QTY :- 1W+1SB
TYPE:- HORIZ. SCREW PUMP
CAP :- 5 CU.M/HR(EACH)
HEAD:- 20 MWC

50 NB M.S HVY. CL. PIPE TO IS:1239 50 Rmt

OILY WASTE FROM POWER HOUSE AREA
UNDER GRAVITY

POWER HOUSE OILY WASTE SUMP
CAP.-10M3
M.O.C.-RCC
SIZE - 3.6 x 2.0M
LOCATION - POWER HOUSE AREA UNIT-2

POWER HOUSE AREA SERVICE WASTE TRANSFER PUMPS
QTY :- 1W+1SB
TYPE:- HORIZ. SCREW
CAP :- 15 CU.M/HR(EACH)
HEAD:- 20 MWC

FROM BOILER, ESP AREA WASH WATER UNIT-1
UNDER GRAVITY

PRE-SETTLING PIT
CAP.-10M3
M.O.C.-RCC
SIZE - 2.5 x 2.5 M
LOCATION - ESP AREA;UNIT-1

PRE-SETT. OVER FLOW PUMPS (1W+1S)
QTY :- 1W+1SB
TYPE:- VERT. CENTRIFUGAL
CAP :- 15 CU.M/HR(EACH)
HEAD:- 20 MWC
SUMP SIZE :- 3.6 x 2.5 M

63 NB M.S HVY.CL. PIPE TO IS;1239 530 Rmt

63 NB M.S HVY.CL. PIPE TO IS;1239 670 Rmt

UNDER GRAVITY
FROM BOILER, ESP AREA WASH WATER UNIT-2

PRE-SETTLING PIT
CAP.-10M3
M.O.C.-RCC
SIZE - 2.5 x 2.5 M
LOCATION - ESP AREA;UNIT-2

PRE-SETT.OVER FLOW PUMPS (1W+1S)
QTY :- 1W+1SB
TYPE:- VERT. CENTRIFUGAL
CAP :- 15 CU.M/HR(EACH)
HEAD:- 20 MWC
SUMP SIZE :- 3.6 x 2.5 M

BTG AREA

ETP AREA

CPU N-PIT (CPU & DM WASTE) (BY CPU VENDOR)
PUMPED MAIN
TP-6
80 CU.M/HR (INTERMITTENT)

RO REJECT-II WASTE (BY DM PLANT VENDOR)
PUMPED MAIN
TP-5
20 CU.M/HR (CONT.)

80 NB CPVC PIPE (SCH.10)

150 NB CPVC PIPE

FROM TPI TUBE SETTLER

CMB
TOTAL CAPACITY:1000 M3
EACH COMPARTMENT
SIZE: 12.0 x12.0 x 3.5M
MOC-RCC

800 WIDE CHANNEL SHUTTER

400x400 PENSTOCK

CMB OVER FLOW SUMP

3TON ELEC. TRAVELLING TROLLEY

300 NB MS PIPE; INTERNALLY PU COATED; IS;3589; 5.2 THK.

RE-CIRCULATION LINE

350 NB M.S PIPE INTERNALLY PU COATED; IS 3589; 6 THK.

CENTRAL MONITORING BASIN EFFLUENT TRANSFER PUMPS
QTY :- 1W+1SB
TYPE:- VERT.AXIAL
CAP :- 1000CU.M/HR(EACH)
HEAD:- REF.DATA SHEET

63 NB;HDPE CL.10KGf/CM2 IS;4984

25NB PVC CL.6; IS:4985

25NB PVC CL.6; IS:4985

FROM ACID DOSING PUMP (REF. SH. 02 OF 03)

FROM ALKALI DOSING PUMP (REF. SH. 02 OF 03)

BY ETP VENDOR

CLAMP ON

400 NB

SAMPLING

65 NB

63 NB;HDPE CL.10KGf/CM2 IS;4984

GARDENING PUMP
QTY :- 1W+1SB
TYPE:- VERT.CETRIFUGAL
CAP :- 20 CU.M/HR(EACH)
HEAD:- REF.DATA SHEET
MOTOR:-2.2 KW;4P;
FLOW:-BRACKISH WATER

100 NB

63 NB;HDPE CL.10KGf/CM (TOTAL HEADER LENGTH=300Rm1) IS;4984

350 NB PIPE TO CHP DUST SUPP. SYSTEM (TP; AS MARKED IN ETP LAYOUTDRG)

350 NB

400x350

TO GUARD POND

BY ETP VENDOR

TO HORTICULTURE (LOC-30M FROM COMMON DISCHARGE HEADER)

BY BHEL

BHEL SCOPE
N-4066.75
(REF. BHEL DRG. NO. PE-V0-412-164-A002/A032)

ORIFICE

400 NB M.S PIPE INTERNALLY PU COATED; IS 3589 ; 6 THK.

FROM SLUDGE SUMP IN PTP AREA (BY PT PLANT VENDOR) TP-3

400NB UPVC PIPE 2X3500 CU.M/HR (INTERMITTENT)

300 NB MS PIPE; INTERNALLY PU COATED; IS;3589; 6 THK.

RE-CIRCULATION LINE

GUARD POND TWIN COMPARTMENTS
TOTAL CAPACITY:5000 M3
SIZE: 27.0 x 27.0 x 3.5M
MOC-RCC

400x400 PENSTOCK

OVER FLOW SUMP

3 TON ELEC. TRAVELLING TROLLEY

GUARD POND EFFLUENT TRANSFER PUMPS
QTY :- 1W+1SB
TYPE:- VERT.TURBINE
CAP :- 1200 CU.M/HR(EACH)
HEAD:- REF.DATA SHEET
APPL:- SEA WATER

450 NB MS PIPE; INTER. PU COATED; IS;3589; 6 THK.

SAMPLING

400 NB

300 NB

CLAMP ON

400 NB MS PIPE; INTERNALLY PU COATED; IS;3589; 6 THK.

350 NB MS PIPE; INTERNALLY PU COATED; IS;3589; 6 THK.

400x400

500 NB

ETP VENDOR SCOPE

N-4066.75

TP-21

BHEL SCOPE

TO CW BLOW DOWN HEADER

TO ASH WATER SUMP (REF. BHEL DRG. NO. PE-V0-412-164-A002/A032)

FROM ALUM DOSING PUMP (REF. SH. 02 OF 03)

FROM LIME DOSING PUMP (REF. SH. 02 OF 03)

FROM PE DOSING PUMP (REF. SH. 02 OF 03)

TREATED WATER FROM FUEL OIL SEPARATOR PE-DC-412-166-A001
PUMPED MAIN
BHEL-PEM
N-4066.75
TP-9
ETP VENDOR SCOPE

65 NB M.S HVY. CL. PIPE TO IS:1239

65 NB

TPI INLET WATER TRANSFER PUMPS
QTY :- 1W+1SB
TYPE:- HORZ.SCREW
CAP :- 40 CU.M/HR(EACH)
HEAD:- 10 MWC
LOCATION - ETP AREA

COMMON COLLECTION SUMP
CAP.-20 M3
M.O.C.-RCC
SIZE - 3.6 x 4.0M
QTY :- 1 NOS.
LOCATION - ETP AREA

65 NB : M.S HVY. CL.PIPE TO IS-1239

725 Rmt
100 NB : M.S HVY. CL. PIPE TO IS-1239

1100 M3/HR (CONTINUOUS) FROM RO REJECT STAGE I (BY DM PLANT VENDOR) TP-4

300NB GRP PIPE PW10

100 NB M.S HVY CL;IS-1239

TO CMB

(TREATEDWATER) 100 NB : M.S HVY. CL.PIPE TO IS-1239

OIL WATER SEPARATOR (PVC TUBE MEDIA) CAP.-40M3/HR.
LOCATION - ETP AREA
2GBS01 WS-001

SLOP OIL STORAGE TANK
LOCATION - ETP AREA
CAP :- 200 Ltr.
QTY :- 2 NOS.(1W+1S)

65 NB M.S HVY CL;IS-1239

TO SLUDGE SUMP THRU.MANHOLE#1

FROM OIL WATER SEPERATOR

TO CMB

200 NB 6 THK. MS HVY. CL.PIPE TO IS:3589

FLOCCULATOR

TUBE SETTLER 125M3/HR
3GBS01 TS-001
LOCATION - ETP AREA

25NB PVC CL.6; IS:4985

40NB MS HVY. CL. PIPE TO IS:1239

25NB PVC CL.6; IS:4985

inlet chamber

MANHOLE#1 LL=(-)1.10

65 NB M.S

80 NB M.S HVY.CL. PIPE TO IS;1239 TO SLUDGE SUMP

FILTER SILENCER

80NB

AIR BLOWERS FOR SLUDGE SUMP
QTY. - 2 NOS. (1W+1S)
CAP. - 270 (N) Cu.m /HR.
PRE. - 0.40 kg/cm 2
MOTOR - (5.5) KW; 4 POLE
TYPE - TWIN LOBE BLOWER

80NB MS PIPE TO IS;1239

CLAMP ON TYPE

63 NB HDPE PIPE

63NB

63 NB HDPE;CL. 6KG/CM2 PIPE TO IS;4985; (800 M PIPING) ON PEDESTAL

TO ASH SLURRY SUMP (REF. BHEL DRG. NO. PE-V0-412-164-A002/A032)

SLUDGE TRASFER PUMP
QTY :- 1W+1SB
TYPE:- HORZ.SCREW
CAP :- 10 CU.M/HR(EACH)
HEAD:- 20 MWC
MOTOR:-3.7 KW;4P;

SLUDGE PIT
CAP.- 20m3
SIZE-3.0 x 3.0M
M.O.C.-RCC
LOCATION - ETP AREA

PIPE SIZES OF CS PIPE					
Nb	O.D(mm)	THICK	Nb	O.D(mm)	THICK
15	21.8	3.2	150	166.5	5.4
25	34.2	4.0	200	219.1	6.0
40	48.8	4.0	250	273.0	6.0
50	60.8	4.5	300	323.9	6.0
65	76.6	4.5	350	355.0	6.0
80	89.5	4.8	400	406.0	6.0
100	115.0	5.4	450	456.0	6.0

LEGENDS

NOTES:

1. PIPE LINE SIZE INDICATED ARE IN mm (NB).
2. ALL THE PIPE SIZES INDICATED IN THE DRAWING ARE MINIMUM. PIPE SIZES HAS BEEN SELECTED WHERE EVER REQUIRED TO MEET THE SYSTEM REQUIREMENT.
3. SUITABLE PERMANENT FLUSHING CONNECTION SHALL BE PROVIDED FOR ALL PIPE LINES CARRYING SLUDGE AND CHEMICAL LINES. IN CASE, ADEQUATE PRESSURE IS NOT AVAILABLE,SEPARATE BOOSTER PUMPS (2X100%) SHALL BE PROVIDED.
4. ALL RECIRCULATION LINES SHALL BE PROVIDED WITH SUITABLE ORIFICE PLATE & SHALL BE DESIGNED BASED ON MINIMUM 50% OF EACH PUMP CAPACITY.
5. ALL THE PIPE, VALVE SIZES AND ANY OTHER SIZES INDICATED IN THE DRAWING ARE MINIMUM REQUIREMENT. PIPE & VALVES SIZES SHELL BE INCREASED WHERE EVER REQU. TO MEET THE SYSTEM REQUIREMENT.
6. ALL LOCAL INSTRUMENTS SHALL BE PROVIDED WITH ISOLATION GLOBE VALVES AS REQUIRED.
7. ALL THE PIPING, VALVES, INSTR., EQUIPMENT / ITEMS INDICATED IN THIS P&ID SHALL BE IN BIDDER'S SCOPE UNLESS OTHERWISE EXCLUSIVELY EXCLUDED.
8. FIRST UNIT'S KKS TAG NOS. SHALL HAVE PREFIX '10' AND SECOND UNIT SHALL HAVE PREFIX '20' AND ETP AREA TAG NOS.SHALL HAVE PREFIX '90'.
9. PRES. GAUGE SHALL BE PROVIDED WITH 3-WAY SS-316 GAUGE COCK.
10. SAMPLE POINT SHALL BE PROVIDED WITH 2-WAY PVC GAUGE COCK.
11. FOR DP GAUGE 5-WAY SS 316 MANIFOLD AND FOR PT 2-WAY SS 316 MANIFOLD SHALL BE PROVIDED.
12. SOLENOID VALVE OF RESPECTIVE APPLICATIONS SHALL BE MONITERED THRU THEIR RESPECTIVE LCP
13. FOR LEGEND REFER SH. 03 OF 03.
14. EL 0.00M CORRES. TO RL 10.00 M WHICH IS FFL OF TG BUILDING
15. OUTSIDE ETP AREA(BTG AREA) CONTROL SHALL BE FROM DDCMIS PANEL OF NEARBY CONTROL ROOM.
16. ETP AREA CONTROL SHALL BE THRU STAND ALONG CONTROL SYSTEM OF DDCMIS FAMILY
17. ALL LT AND FM SHALL BE OF ULTRASONIC TYPE EXCEPT. FOR CHEMICAL TANKS WHICH SHALL CAPACITANCE TYPE TRANSMITTER DUE TO AGITATOR IN SMALL TANKS.
18. ALL INSTRUMENTS SHALL HAVE 15 DIA GLOBE VALVE FOR ISOLATION

PROJECT	2 x 660 MW ENNORE SEZ STPP (AT ASH DYKE OF NCTPS, CHENNAI)
OWNER	TAMILNADU GENERATION & DISTRIBUTION CORPORATION LIMITED
CONSULTANT: DESEIN	DESEIN PVT. LIMITED CONSULTING ENGINEERS NEW DELHI; HYDERABAD- INDIA
CONTRACTOR BHEL	BHARAT HEAVY ELECTRICALS LTD POWER SECTOR PROJECT ENGINEERING MANAGEMENT NOIDA,NEW DELHI
TITLE:- P&ID DIAGRAM OF EFFLUENT TREATMENT PLANT	REV. 00
BHEL DOC NO. PE-V0-412-164-A004	SHEET. 1 OF 3

FORMAT SIZE A0

COPY RIGHT AND CONFIDENTIAL
BHARAT HEAVY ELECTRICALS LIMITED
The information on this document is the property of BHEL
it must not be used directly or indirectly in any way detrimental to the interest of the company.

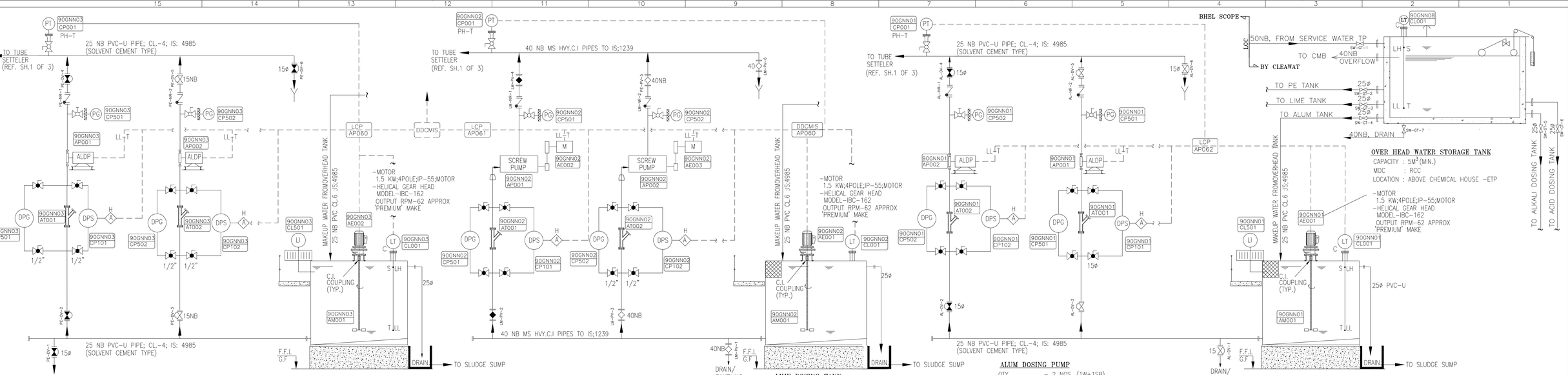

OVER HEAD WATER STORAGE TANK

CAPACITY : 5M^3 (MIN.)
MOC : RCC
LOCATION : ABOVE CHEMICAL HOUSE -ETP

-MOTOR
1.5 KW;4POLE;IP-55;MOTOR
-HELICAL GEAR HEAD
MODEL-IBC-162
OUTPUT RPM-62 APPROX
'PREMIUM' MAKE

POLY ELECTROLYTE DOSING PUMPS

QTY.	–	2 NOS. (1W+1SB)
CAP.	–	0-90 LPH (MAX.) AT 1.5 KG/cm^2
TYPE	–	ELECTRONICALLY OPERTATED DIAPHRAGRAM PUMP
STROKE SPEED	–	>100
CAPACITY CONTROL	–	10-100% MANNUALLY BY MICRO METER DIAL
MAKE	–	MILTON ROY
PUMP ACCESSORIES	–	ANTI SYPHON VALVE ;STRAINER

POLY ELECTROLYTE SOLUTION PREPARATION TANKS

QTY.	--	1 NOS.
CAPACITY	--	5.00 M3.
TANK SIZE	--	2.0Mø x 1.6M(SWD) + 0.3M(FB)
SOL. STRENGTH	--	0.5 % (W/W)
DOSE RATE	--	1 PPM.(MAX)
TANK M.O.C.	--	MS-R/L
AGITATOR MOC	--	SS-316
AGITATOR	--	'CLEAWAT' MAKE
MOTOR	--	1.5 KW : 4 POLE

LIME DOSING PUMP

QTY.	–	2 NOS. (1W+1SB)
CAP.	–	600 LPH x 10 MWC
TYPE	–	SCREW PUPMPS
MAKE	–	UT PUMPS
DRIVE	–	0.75 KW,4 POLE
MOC	–	C.I; IS-210

LIME DOSING TANK

QTY.	--	1 NOS.
CAPACITY (NET)	--	5.00 CU.M (EACH)
SOL. STRENGTH	--	6% (IN TANK); APPROX
M.O.C	--	MSEP
TANK SIZE	--	2.0Mø x 1.6M(SWD) + 0.3M(FB)
AGITATOR	--	'CLEAWAT' MAKE;
AGITATOR TYPE	--	VERTICAL
MOTOR	--	1.5KW : 4 POLE

ALUM DOSING PUMP

QTY.	–	2 NOS. (1W+1SB)
CAP.	–	0-90 LPH (MAX.) AT 1.5 KG/cm^2
TYPE	–	ELECTRONICALLY OPERTATED DIAPHRAGRAM PUMP
STROKE SPEED	–	>100
CAPACITY CONTROL	–	10-100% MANNUALLY BY MICRO METER DIAL
Y-STRAINER	–	PP
PRV	–	EXTERNAL ;PVC
MAKE	–	MILTON ROY
PUMP ACCESSORIES- ANTI SYPHON VALVE ;STRAINER		

ALUM SOLUTION PREPERATION TANK

LOCATION	--	CHEMICAL HOUSE	
QTY.	--	1 NO.	
CAP	--	5 CU.M	
M.O.C	--	MS-R/L	
SOL. STRENGTH	--	10% (MAX. IN TANK)	
BASKET SIZE	--	2.0Mø x 1.6M(SWD) + 0.3M(FB)	
AGITATOR	--	CLEAWAT MAKE	
MODEL NO.	--	CW-AG-AL-1.5	
AGITATOR MOC	--	SS-316	
MOTOR	--	1.5KW ;4 POLE ,	

CHEMICAL DOSING SYSTEM FOR TUBE SETTLER,ETP AREA

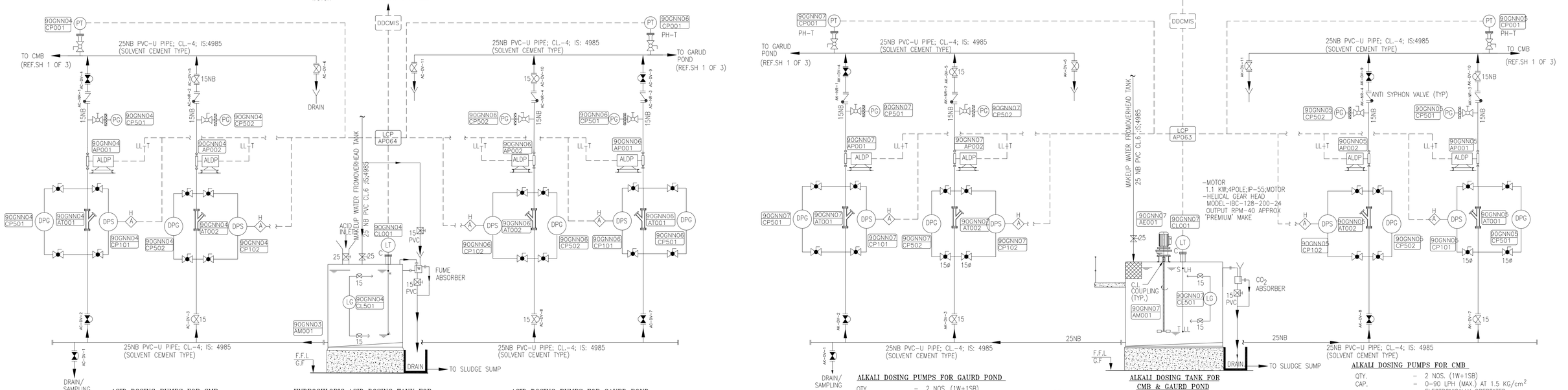

ACID DOSING PUMPS FOR CMB

QTY.	–	2 NOS. (1W+1SB)
CAP.	–	0-90 LPH (MAX.) AT 1.5 KG/cm^2
TYPE	–	ELECTRONICALLY OPERTATED DIAPHRAGRAM PUMP
STROKE SPEED	–	>100
CAPACITY CONTROL	–	10-100% MANNUALLY BY MICRO METER DIAL
MAKE	–	MILTON ROY
PUMP ACCESSORIES	–	ANTI SYPHON VALVE;STRAINER

HYDROCHLORIC ACID DOSING TANK FOR CMB & GAURD POND

QTY.	--	1 NOS.
CAPACITY	--	1.00 M3.
TANK SIZE	--	1.0Mø x 1.0M(SWD) + 0.3M(FB)
SOL. STRENGTH	--	30-35 % (W/W)
DOSE RATE	--	5 PPM.(MAX)
TANK M.O.C.	--	MS-R/L
ACID FILL (30-35%)	--	MANNUAL FROM CONNISTERS

ACID DOSING PUMPS FOR GAURD POND

QTY.	–	2 NOS. (1W+1SB)
CAP.	–	0-90 LPH (MAX.) AT 1.5 KG/cm^2
TYPE	–	ELECTRONICALLY OPERTATED DIAPHRAGRAM PUMP
STROKE SPEED	–	>100
CAPACITY CONTROL	–	10-100% MANNUALLY BY MICRO METER DIAL
MAKE	–	MILTON ROY
PUMP ACCESSORIES	–	ANTI SYPHON VALVE ;STRAINER

ALKALI DOSING PUMPS FOR GAURD POND

QTY.	–	2 NOS. (1W+1SB)
CAP.	–	0-90 LPH (MAX.) AT 1.5 KG/cm^2
TYPE	–	ELECTRONICALLY OPERTATED DIAPHRAGRAM PUMP
STROKE SPEED	–	>100
CAPACITY CONTROL	–	10-100% MANNUALLY BY MICRO METER DIAL
MAKE	–	MILTON ROY
PUMP ACCESSORIES	–	ANTI SYPHON VALVE ;STRAINER

ALKALI DOSING TANK FOR CMB & GAURD POND

QTY.	--	1 NOS.
CAPACITY	--	1.00 M3.
TANK SIZE	--	1.0Mø x 1.0M(SWD) + 0.3M(FB)
SOL. STRENGTH	--	10 % (W/W)
DOSE RATE	--	5 PPM.(MAX)
TANK M.O.C.	--	MS-R/L
ALKALI FILL	--	MANNUAL FROM CONNISTERS
AGITATOR MOC	--	SS-316
AGITATOR	--	'CLEAWAT' MAKE
MOTOR	--	1.5 KW : 4 POLE

ALKALI DOSING PUMPS FOR CMB

QTY.	–	2 NOS. (1W+1SB)
CAP.	–	0-90 LPH (MAX.) AT 1.5 KG/cm^2
TYPE	–	ELECTRONICALLY OPERTATED DIAPHRAGRAM PUMP
STROKE SPEED	–	>100
CAPACITY CONTROL	–	10-100% MANNUALLY BY MICRO METER DIAL
MAKE	–	MILTON ROY
PUMP ACCESSORIES	–	ANTI SYPHON VALVE; STRAINER

CHEMICAL DOSING SYSTEM FOR CMB & GAURD POND ,ETP AREA

PROJECT	2 x 660 MW ENNORE SEZ STPP (AT ASH DYKE OF NCTPS, CHENNAI)
OWNER	TAMILNADU GENERATION & DISTRIBUTION CORPORATION LIMITED
CONSULTANT: desein	DESEIN PVT. LIMITED CONSULTING ENGINEERS NEW DELHI; HYDERABAD- INDIA
CONTRACTOR: BHEL	BHARAT HEAVY ELECTRICALS LTD POWER SECTOR PROJECT ENGINEERING MANAGEMENT NOIDA,NEW DELHI
TITLE:- P&ID DIAGRAM OF EFFLUENT TREATMENT PLANT	REV. 00
BHEL DOC NO. PE-V0-412-164-A004	SHEET 2 OF 3

DRAWING NO. 1-WT-025-00851

VALVES

- SLUICE/GATE VALVE (OPEN/CLOSE)
- SCD. GM VALVE (OPEN/CLOSE)
- PLUG VALVE (OPEN/CLOSE)
- NON RETURN VALVE
- DRAIN VALVE
- SAMPLING POINT (LOCAL)
- DRAIN
- CHANNEL SHUTTER
- PENSTOCK
- PRESSURE RELIEF VALVE
- BUTTERFLY VALVE
- BALL VALVE
- SCD. GM GLOBE/ GATE VALVE (OPEN/CLOSE)
- GAUGE COCK (2/3 WAY)
- 3 WAY NEEDLE VALVE
- DIAPHRAGM VALVE

- MOTOR OPERATED
- GATE VALVE (OPEN/CLOSE)
- SOLENOID OPERATED

EQUIPMENT

- HYD. DIAPHRAGM METERING PUMP
- VERT. MIXER WITH GEAR
- HORIZ. MIXER WITH GEAR
- Y-STRAINER
- PULSATION DAMPENER
- DRIVE MOTOR
- FILTER
- SILENCER
- REDUCER
- HORZ. SCREW PUMP
- VERT. SCREW PUMP

- VERT. TURBAINE

INSTRUMENTS

- AIT Turb — TURBIDITY ANALYZER
- FG — FLOW GAUGE
- FIS — FLOW SWITCH
- PG — PRESSURE GAUGE
- LG — LEVEL GAUGE;FLOAT TYPE
- FT U — FLOW TRANSMITTER;ULTRASONIC TYPE
- FI — FLOW INDICATOR
- LT U — ULTRASONIC LEVEL TRANSMITTER
- LT C — LEVEL TRANSMITTER CAPACITANCE TYPE
- LI — HORZ. LEVEL SCALE
- LI — HORZ. LEVEL SCALE
- PT — PRESSURE TRANSMITTER
- TS — TORQUE SWITCH

KKS CODING SYSTEM

UNIT KEY
FUNCTION KEY
AREA KEY
x xxx xx
xx xxx
EQUIP./ INST. NO.KEY
EQUIP./ INST. KEY

UNIT KEY

1 – FIRST UNIT

FUNCTION KEY

GBD – AERATOR & CLARIFIER
GBR – SLUDGE TRANSFER SYSTEM
GBN – CHEMICAL DOSING SYSTEM
GBS – SLUDGE THICKENING SYSTEM

EQUIPMENT/INST.KEY

MECHANICAL

AP – PUMPS
AN – BLOWERS
AA – VALVES
AT – FILTERING ELEMENT
AM – MIXERS
BB – VESSELS AND STORAGE TANKS

ELECT, C&I

AE – MOTORS
CF – FLOW MEASUREMENT
CP – PRESSURE MEASUREMENT
CT – TEMPERATURE MEASUREMENT
CQ – ANALYTICAL MEASUREMENT
CL – LEVEL MEASUREMENT
DP – DIFF. PR. MEASUREMENT

EQUIPMENT/INST. NO. KEY

MECHANICAL

001 TO 050 EQUIPMENTS
051 TO 099 MOTORISED VALVE
101 TO 150 PNEU. ACTUATED VALVES
201 TO 299 SOLENOID OPERATED VALVES
401 TO 499 NON RETURN VALVES
501 TO 599 MANUAL VALVES
701 TO 799 PR. RELIEF VALVES

ELECT, C&I

001 TO 099 ANALOG INSTRUMENTS – REMOTE
101 TO 199 PROCESS SWITCHES
501 TO 599 PROCESS INDICATORS – LOCAL

LEGENDS

LH – LEVEL HIGH
LL – LEVEL LOW
T – TRIP
S – START
PH-T – PRESS. HIGH;TRIP
LL-T – LEVEL LOW;TRIP
DDCMIS –
LCP –

PROJECT	2 x 660 MW ENNORE SEZ STPP (AT ASH DYKE OF NCTPS, CHENNAI)
OWNER	TAMILNADU GENERATION & DISTRIBUTION CORPORATION LIMITED
CONSULTANT:	DESEIN PVT. LIMITED CONSULTING ENGINEERS NEW DELHI; HYDERABAD– INDIA
CONTRACTOR	BHARAT HEAVY ELECTRICALS LTD POWER SECTOR PROJECT ENGINEERING MANAGEMENT NOIDA,NEW DELHI
TITLE:– P&ID DIAGRAM OF EFFLUENT TREATMENT PLANT	REV. 00
BHEL DOC NO. PE-V0-412-164-A004	SHEET. 3 0F 3

TAMIL NADU GENERATION AND DISTRIBUTION CORPORATION LIMITED

From
Er.P.Shanmuganathan,B.E.
Superintending Engineer/Elect.,
Thermal & Hydro Projects,
V Floor, Western Wing,
144, Anna Salai, Chennai-600 002.
Cell No : 9445857544
Email ID: sethhyp@tnebnet.org

To
Shri Madan Lal, DGM,BHEL/PS-PMG,
Tower-A,4th floor, Advant Navis Business Park,
Plot No:7, Sector-142, Expressway Noida,
Gautam Buddh Nagar(UP) - 201305
Direct:0120- 6748021
Mobile :+919425080823
Email : mlal@bhel.in

Lr.No.:SE/E/Th&HyP/EE-7/M/AEE/M/F.En SEZ STPP/D.747/18 dt.26 .12.2018.

Dear Sirs,

Sub: TANGEDCO - 2x660 MW Ennore SEZ STPP – EPC Contract to M/s. BHEL – CPU, ETP & STP Drawings – noted as information – Reg.

Ref: 1. Lr.No: CE/P/SE/M/EE-10/E/P/F.2x660MWEn.SEZ.STPP/D.60/2014 dt.27.09.2014.
2. MOM dt. 19.12.'18 and 20.12.'18 held at BHEL /PSSR office.

******

With reference to MOM under reference (2) above, the following drawings on CPU, ETP & STP are approved under information category.

Category I - Approved. Category II - Approved with comments. Proceed with Fabrication considering our comments & Resubmit for approval. Category III - Not approved. See comments and resubmission required. Category IV - For information. M/s BHEL to note that any changes and modifications in the approved CAT-IV drawings/documents to be informed to TANGEDCO and update the drawings accordingly.

S.No	Drawing No.	Rev	Description	Remarks
1.	PE-V0-412-155-A019	2	DATASHEET OF RESIN TRAP, CARBON TRAP, ACF, AGITATOR FOR CONDENSATE POLISHING UNIT	CAT : IV
2.	PE-V0-412-155-A022	1	TECHNICAL DATA SHEET FOR LOW PRESSURE VALVES FOR CONDENSATE POLISHING UNIT	CAT : IV
3.	PE-V0-412-155-A037	1	PIPING LAYOUT (SERVICE VESSEL AREA) FOR CONDENSATE POLISHING UNIT	CAT : IV
4.	PE-V0-412-164A-A002	1	LAYOUT OF EFFLUENT TREATMENT PLANT	CAT : IV
5.	PE-V0-412-164A-A029	1	CIVIL INPUT DRAWINGS OF ETP AREA SUMPS AND LAMELLA CLARIFIER	CAT : IV
6.	PE-V0-412-553-A007	1	QAP OF PUMPS FOR AIR CONDITIONING SYSTEM	CAT : IV
7.	PE-V0-412-553-A020	1	TDS & GA of condenser & chilled water pumps along with foundation details for AC system	CAT : IV
8.	PE-V0-412-553-A033	1	TDS OF PIPE FOR AC SYSTEM	CAT : IV
9.	PE-V0-412-673-A023	1	Painting Schedule FOR STP	CAT : IV
10.	PE-V0-412-673-A034	1	MECH. GA OF LAMELLA TUBE SETTLER CLARIFIER FOR SEWAGE TREATMENT PLANT	CAT : IV
11.	PE-V0-412-673-A040	1	GA DRAWING OF HYPO DOSING TANKS	CAT : IV

Yours faithfully,
-sd-/dt.26.12.2018

APPROVED VIDE Lr.No.:SE/E/Th&HyP/EE-7/M/ AEE/M/F.En SEZ STPP/D.747/18 dt.26 .12.2018.

S. No.	BHEL Drg/Doc No.	Clear Water Drg/Doc No.	Title of Document
2.	PE-V0-412-164A-A051 (SH. 1 to 2) (Rev.01)	17-04/A081(SH. 1 & 2) (Rev.01)	Civil and Mech. G.A of CMB
3.	PE-V0-412-164A-A052 (SH. 1 to 2) (Rev.01)	17-04/A085(SH. 1 & 2) (Rev.01)	Civil and Mech. G.A of Guard Pond
4.	PE-V0-412-164A-A029 (SH. 1 to 2) (Rev.01)	17-04/A085(SH. 1 of 1) (Rev.01)	Civil & Mech. G.A of Lamella Clarifier of ETP
5		17-04/A390(SH. 1 of 1) (Rev.02)	Mech. & civil G.A of sludge sump

S. NO.	Desein Comment	CWL Reply
A	**Mech GA Guard Pond**	
1	Add following note on the drawing "EL 0.00 M corresponds to RL 10.00 M which is FFL of TG Building". Revise note 4 accordingly. Incase elevation need to be revised please do so accordingly.	Note No. 4 Revised as requested.
2	Mark maximum and minimum water levels in guard pond.	Already indicated; Ref Sec. 085-22; Sec. 085-23 & 24
3	Indicate width of walkway all around the guard pond.	Walkway around the Guard Pond is not required operationally as no equipment is installed inside Pond . Walkway connecting Inlet sump and Outlet has been provided.
4	Show dewatering pits in each compartment of guard pond.	Now indicated. Pl. refer to Sec 085-11
5	Section – 085-24 – Indicate locating dimensions of sluice gate along with dimensions of sluice gate.	Already Indicated. Ref to Sec. 085-24
6	Show locating dimensions of staircase near pumps.	Now Indicated.
7	Section 085-23 – Revise manual hoist to electric hoist	Now Revised ; Ref. Sec. 085-22, 23.
8	Section 085-23 –Indicate bottom of hook of hoist	Indicated.
9	All RCC surface coming in contact with sea water shall be painted in line with Volume VI of specification. Revise Note 6 accordingly	Note No. 6.1 revised.
10	Section – 085-24 – Indicate FFL of handwheel for sluice gate	Indicated; Ref. Sec. 085-24

S. NO.	Desein Comment	CWL Reply
11	Section 085-23 –Indicate all dimensions in the bottom portion i.e pump sump and other areas.	Drg. amended as requested
12	Section – 085-22 – Mark all dimensions of local depression	Drg. amended as requested
13	All piping coming in contact with sea water shall be internally & externally painted in line with specification. Revise accordingly	Note No 6.2.added.
B.	**Mech GA CMB**	
14	Add following note on the drawing "EL 0.00 M corresponds to RL 10.00 M which is FFL of TG Building". Revise note 4 accordingly. Incase elevation need to be revised please do so accordingly.	Note No 4 revised .
15	Mark maximum and minimum water levels in CMB	Already indicated; Pl. refer to Sec. 081-22 &23
16	Indicate width of walkway all around the CMB.	Walkway around the Guard Pond is not required operationally as no equipment is installed inside Pond . Walkway connecting Inlet sump and Outlet has been provided.
17	Show dewatering pits in each compartment of CMB.	Now indicated.
18	Section – 081-24 – Indicate locating dimensions of sluice gate along with dimensions of sluice gate.	Already indicated; pl. refer to Sec. 081-23
19	Section 081-23 – Revise manual hoist to electric hoist	Revised.
20	Section 081-23 –Indicate bottom of hook of hoist	Indicated.
21	All piping coming in contact with sea water shall be internally & externally painted in line with specification. Revise accordingly.	Note No.6.2 added.
22	All piping shall be internally & externally painted in line with specification. Revise accordingly.	Note No.6.2 added.
23	Section – 081-24 – Indicate FFL of hand wheel for sluice gate	Indicated.
24	Section 081-23 –Indicate all dimensions in the bottom portion i.e pump sump and other areas.	Drg. amended as requested

25	Section – 085-22 – Mark all dimensions of local depression	Indicated already.
26	Indicate effective capacity of each compartment of CMB	Indicated.
C.	**Mech GA Sludge Sump**	
27	Indicate effective capacity of sludge sump	Indicated.
28	Show rungs inside the sludge pump.	Indicated.
29	Add following note on the drawing “EL 0.00 M corresponds to RL 10.00 M which is FFL of TG Building”	Note No.4 added.

APPROVED VIDE Lr.No.:SE/E/Th&HyP/EE-7/M/AEE/M/F.En SEZ STPP/D.747/18 dt.26 .12.2018.

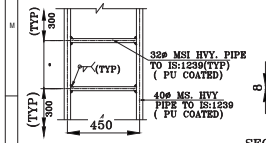

DETAIL–081–22B
(SCALE–1:10)

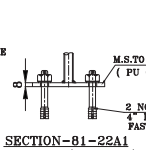

SECTION–81–22A1
(SCALE–1:5)

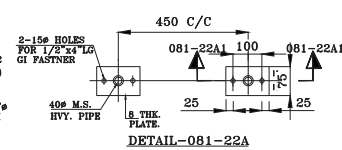

DETAIL–081–22A
(SCALE–1:10)

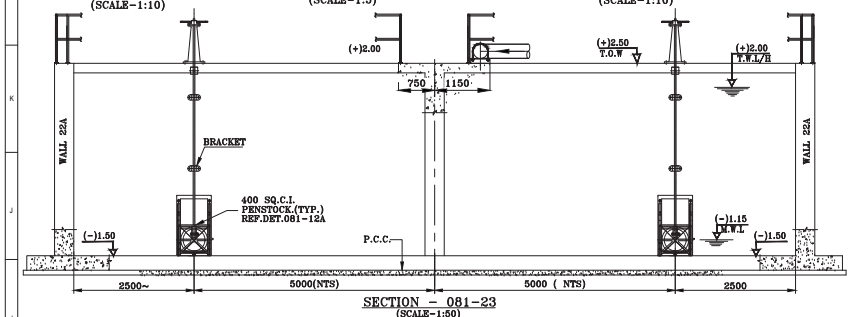

SECTION – 081–23
(SCALE–1:50)

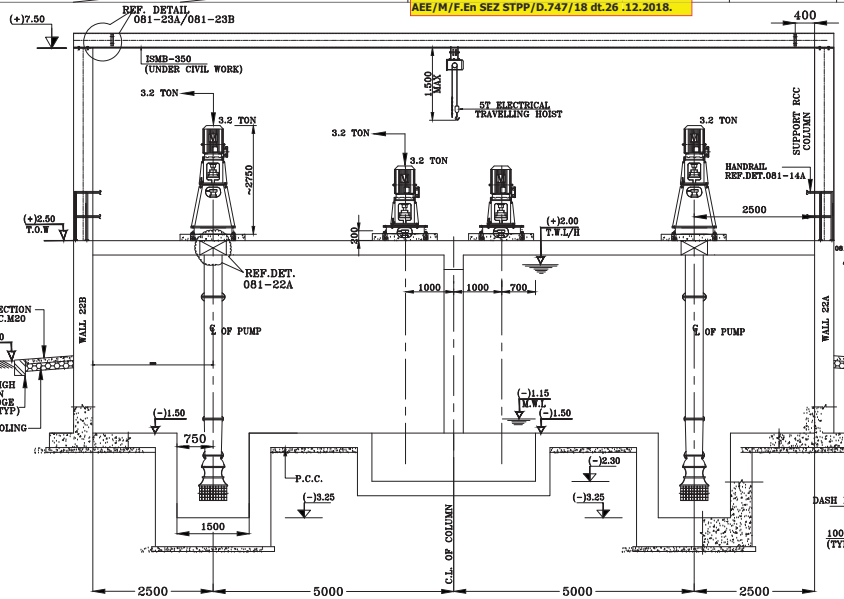

SECTION – 081–23
(SCALE–1:50)

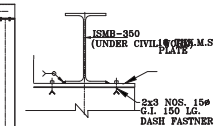

SECTION 081–23A
(SCALE–1:5)

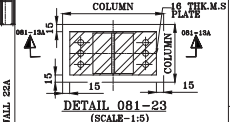

DETAIL 081–23
(SCALE–1:5)

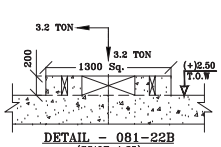

DETAIL – 081–22B
(SCALE–1:25)

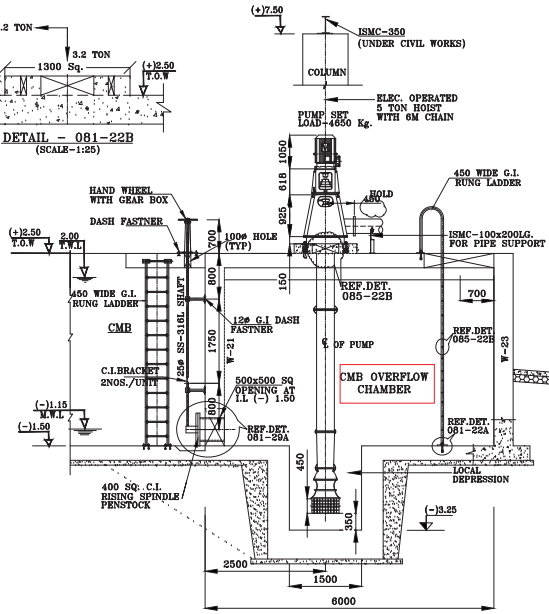

SECTION – 081–22
(SCALE–1:50)

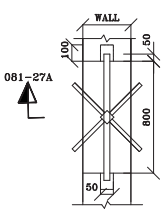

DETAIL–081–27
(SCALE 1:25)

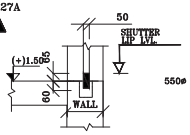

SECTION–081–27A
(SCALE 1:25)

(NOTE: FOR SHUTTER DETAIL REF.DATA SHEET DOC. NO. DS–01/17–04M(10–SH)

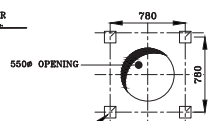

PLAN FOR PUMP FOUNDATION DETAIL– 081–22A1
(SCALE–1:25)

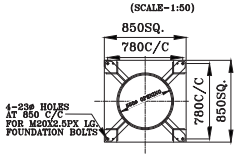

TOP VIEW OF PUMP
(TOTAL PUMP SET WEIGHT–4000KG)
DETAIL–081–22A
(SCALE–1:25)

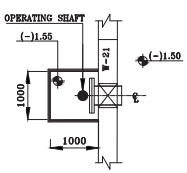

DETAIL – 081–29A
LOCAL DEPRESSION
(SCALE–1:50)

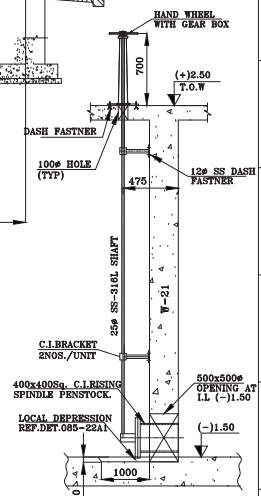

DETAIL–081–29A1
(SCALE–1:50)

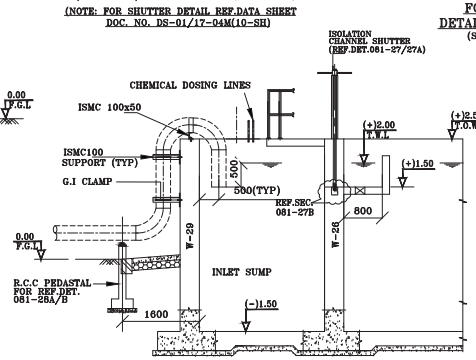

SECTION – 081–27
(PIPE SUPPORTS BY OTHERS)
(SCALE–1:50)

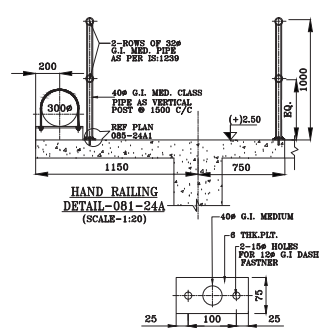

HAND RAILING
DETAIL–081–24A
(SCALE–1:20)

PLAN–081–24A1
(SCALE–1:5)

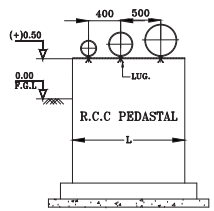

DETAIL 081–28A
(SCALE–1:10)

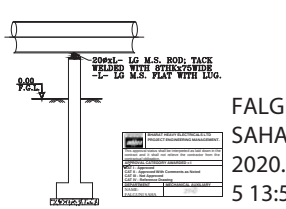

TYP. PIPE PEDESTAL DETAIL – 081–28B
(SCALE–1:25)

NOTES:–
1. ALL DIMENSIONS ARE IN mm. AND LEVELS ARE IN METRES.
2. THIS DRAWING SHOULD NOT BE SCALED.
3. IF IN DOUBT, PLEASE ASK.
4. EL 0.00M CORRESPONDS TO RL 10.00 M WHICH IS FFL OF TG BUILDING
5. FOR TYPICAL NOTES REF. LAYOUT DRG. NO. A011;BHEL DRG.NO. PE–V0–412–164A–A002(SH. 1 & 2)
6.1 ALL RCC SURFACE COMING IN CONTACT WITH SEA WATER SHALL BE PAINTED IN LINE WITH VOLUME VI OF SPECIFICATION.
6.2 ALL PIPING COMING IN CONTACT WITH SEA WATER SHALL BE INTERNALLY & EXTERNALLY PAINTED AS PER SPECIFICATION.
7. RUNG LADDERS (PU COATED) ARE IN CLEAR WATER SCOPE OF SUPPLY.

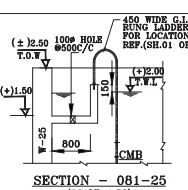

SECTION – 081–25
(SCALE–1:50)

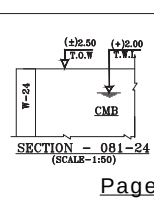

SECTION – 081–24
(SCALE–1:50)

IDENTIFICATION OF DRG. / PLAN / SECTION
CIVIL WORK DETAIL
SHEET NO.
17–05/A 0 81– 1 0
PLAN / SECTION NO.
DRG.NO.
APPROVED BY PURCHASER.
SUB–NO.

REV.No.	DETAILS REVISIONS	DATE
01	RE. SUBMITTED FOR APPROVAL	29.10.2018
0A	RE. SUBMITTED FOR APPROVAL	05.04.2018
00	SUBMITTED FOR APPROVAL	03.03.2018

REFERENCE DRGS.

SL. NO.	DESCRIPTION	CLEWAT DRG. NO.
2	P & I FOR ETP	A012
1	ETP EQUIPMENT LAYOUT	A011

CAUTION
THIS DRG. IS CONFIDENTIAL AND IS THE PROPERTY OF "CLEAR WATER LTD" ITMUST NOT BE DISCLOSEDOPIED OR LENT TO A THIRD PARTY WITHOUT WRITTEN CONSENT OF CLEAR WATER LTD.

QUALITY POLICY
IN ITS QUEST TO SATISFY THE CUSTOMER, CLEAR WATER LTD. PURSUES CONTINUAL IMPROVEMENT IN THE QUALITY OF ITS PRODUCTS, SERVICES AND PERFORMANCE LEADING TO TOTAL CUSTOMER SATISFACTION AND BUSINESS GROWTH THROUGH DEDICATION, COMMITMENT AND TEAM WORK OF ALL EMPLOYEES.

QUALITY OBJECTIVES
- CUSTOMER SATISFACTION BY IMPROVING DELIVERY / COMPLETION PERIOD & RESPONSE.
- QUALITY OF SUPPLIES BY IMPROVING SUB-VENDOR PERFORMANCE.
- CAPABILITY OF HUMAN RESOURCES BY UPGRADING SKILL AND COMPETENCE.

RRB/17–04D(81) DT 15.11.2016

PROJECT	2 x 660 MW ENNORE SEZ STPP (AT ASH DYKE OF NCTPS, CHENNAI)
OWNER	TAMILNADU GENERATION & DISTRIBUTION CORPORATION LIMITED
CONSULTANT	DESEIN PVT. LIMITED CONSULTING ENGINEERS NEW DELHI/ HYDERABAD– INDIA
CONTRACTOR	BHARAT HEAVY ELECTRICALS LTD POWER SECTOR PROJECT ENGINEERING MANAGEMENT NOIDA, NEW DELHI
DESIGNATION	PACKAGE CONTRACTOR :– CLEAR WATER LTD. D–16/1, OKHLA INDUSTRIAL AREA PHASE–II, NEW DELHI–110020 PHONE :–26386006 E–mail :–clearwater@vsnl.net.in
	CLEWAT DRG. NO. 17–04/0281 (SH. 2 OF 2)
	BHEL DRG.NO. PE–V0–412–164A–A029 (SH. 2 OF 2)
	VER 0A
	REV. 01
TITLE:–	CIVIL INPUT DRGS. OF ETP AREA SUMPS & LAMELLA CLARIFIER MECH. GA OF CMB
	SCALE 1:150

FALGUN SAHA 2020.02.5 13:55:4 +05'30'

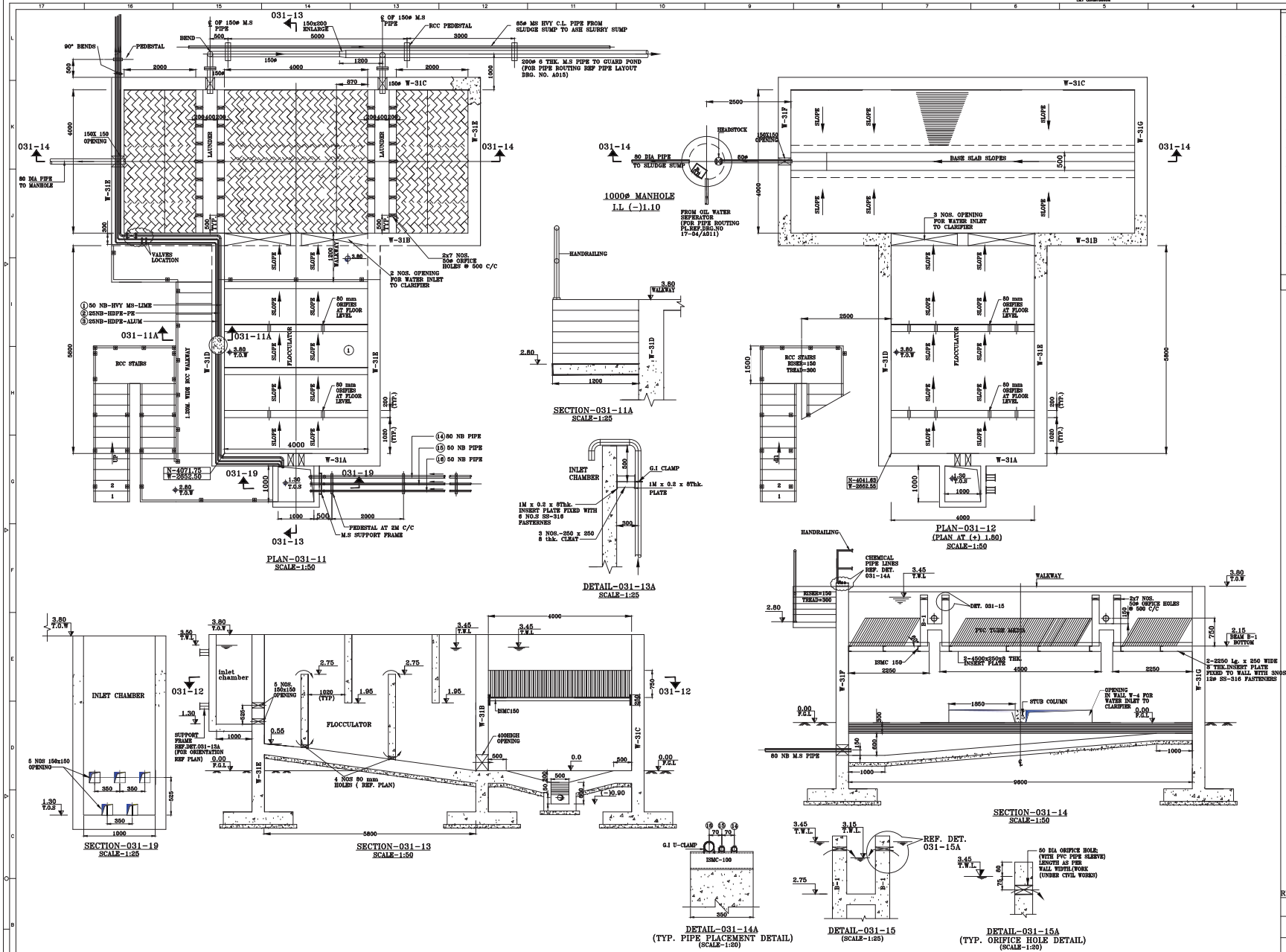

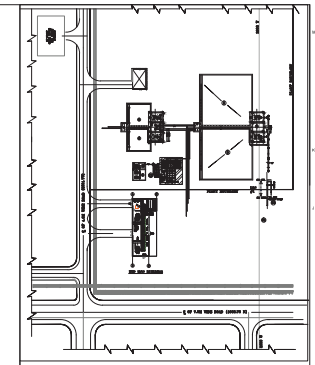

KEY PLAN

NOTES:-

1. ALL DIMENSIONS ARE IN mm AND ALL LEVELS ARE IN METER.
2. THIS DRG. SHOULD NOT BE SCALED.
3. IF IN DOUBT , PLEASE ASK.
4. EL 0.00M CORRESPONDS TO RL 10.00 M WHICH IS FFL OF TG BUILDING
5. FOR TYPICAL NOTES REFER TO LAYOUT DRG. NO. 17-04 / A011
6. FOR INCOMING AND OUTGOING PIPE ROUTING , PL. REFER TO LAYOUT DRG.
7. ALL RCC SURFACE COMING IN CONTACT WITH SEA WATER SHALL BE PAINTED IN LINE WITH VOLUME VI OF SPECIFICATION AS PART OF CIVIL WORK

IDENTIFICATION OF DRG. / PLAN / SECTION

WORK DICIPLINE
SHEET NO.
17-04/A 0 31-1 0
PLAN/SECTION NO.
DRG.NO.
DRG. APPROVED BY PUR.
JOB NO.

LEGEND
F.G.L - FINISH GROUND LEVEL
T.W.L - TOP WATER LEVEL
T.O.W. - TOP OF WALL

SL. NO.	DESCRIPTION	CWL DRG. NO.	BHEL DRG.NO.
1	PLOT PLAN	---	PE-DG-412-100-M00
	REFERENCE DRGS.		
01B	RE. SUBMITTED FOR APPROVAL		15-11-2018
01	RE. SUBMITTED FOR APPROVAL		29-10-2018
0A	RE. SUBMITTED FOR APPROVAL		04-04-2018
00	SUBMITTED FOR APPROVAL		03-03-2018
	DETAILS REVISIONS		DATE

CAUTION
THIS DRG. IS CONFIDENTIAL AND IS THE PROPERTY OF CLEAR WATER LTD' ITMUST NOT BE DISCLOSED/COPIED OR LENT TO A THIRD PARTY WITHOUT WRITTEN CONSENT OF CLEAR WATER LTD.

QUALITY POLICY
IN ITS QUEST TO SATISFY THE CUSTOMER, CLEAR WATER LTD. PURSUES CONTINUAL IMPROVEMENT IN THE QUALITY OF ITS PRODUCTS, SERVICES AND PERFORMANCE LEADING TO TOTAL CUSTOMER SATISFACTION AND BUSINESS GROWTH THROUGH DEDICATION, COMMITMENT AND TEAM WORK OF ALL EMPLOYEES.

QUALITY OBJECTIVES
CUSTOMER SATISFACTION BY IMPROVING DELIVERY / COMPLETION PERIOD & RESPONSE.
QUALITY OF SUPPLIES BY IMPROVING SUB-VENDOR PERFORMANCE.

RRB/17-04D(31)/ DT.15.11.2018

PROJECT	2 x 660 MW ENNORE SEZ STPP (AT ASH DYKE OF NCTPS, CHENNAI)
OWNER	TAMILNADU GENERATION & DISTRIBUTION CORPORATION LIMITED
CONSULTANT	DESEIN PVT. LIMITED CONSULTING ENGINEERS NEW DELHI, HYDERABAD- INDIA
CONTRACTOR	BHARAT HEAVY ELECTRICALS LTD POWER SECTOR PROJECT ENGINEERING MANAGEMENT NOIDA,NEW DELHI
CONSULTANT	PACKAGE CONTRACTOR :- CLEAR WATER LTD. B-14/1, OKHLA INDUSTRIAL AREA PHASE-II, NEW DELHI-110020 PHONE :-26380095 E-mail :-clearwater@bol.net.in
CLEAWAT DRG. NO.	17-04/A031 (SH. 1 OF 1)
BHEL DRG.NO.	PE-VD-412-164-A029 (SH. 1 OF 1)
VER	0B
REV.	01
SCALE	1:50

TITLE:- G.A OF 125 CU.M/HR. LAMLEELA CLARIFIER EFFLUENT TREATMENT PLANT

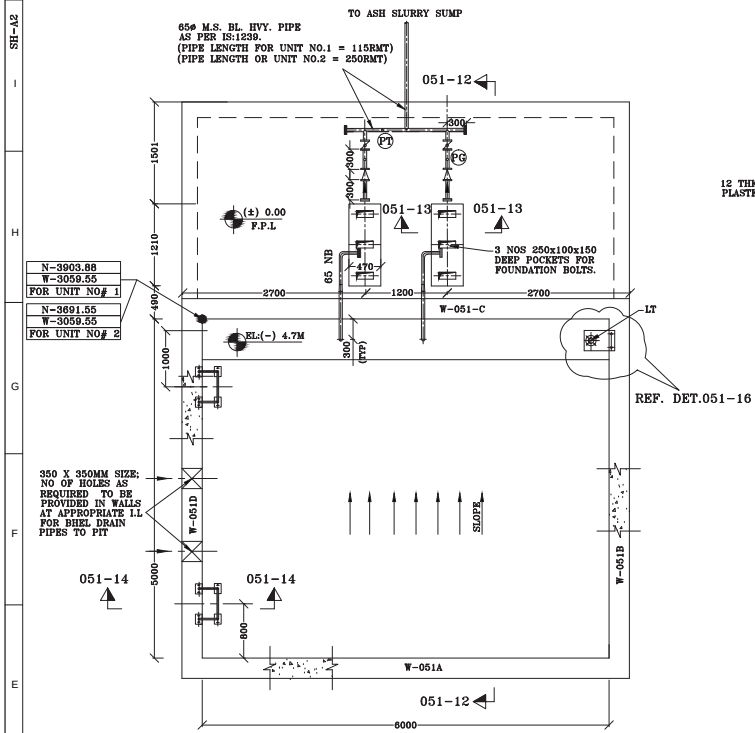

PLAN-051-11
OILY WASTE FROM TRANSFORMER YARD PIT

(FOR LOCATION REF. TO BHEL PLOT PLAN DRG. NO.
PE-DG-412-100-M001(REV-03)
(SUMP TAG NO. E-1 FOR UNIT NO.-1)
(SUMP TAG NO. E-4 FOR UNIT NO.-2)
(SCALE 1:25)

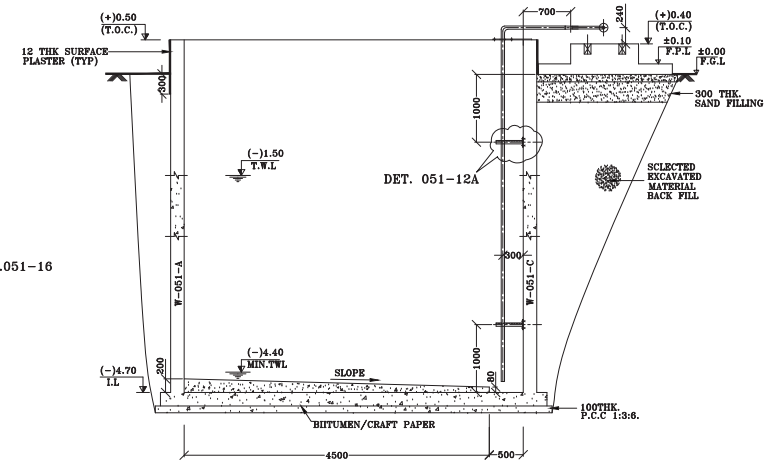

SECTION-051-12
(SCALE 1:25)

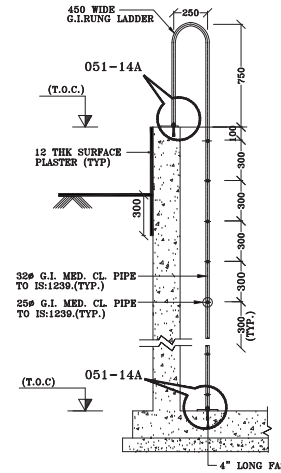

SECTION -051-14
(SCALE 1:25)

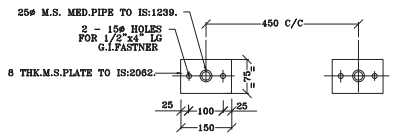

DETAIL - 051-14A(PLAN)
(SCALE 1:10)

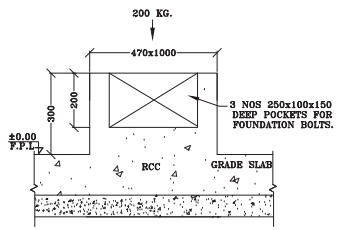

DETAIL 051-13
(TYPICAL SCREW PUMP FOUNDATION PADS)
(SCALE 1:12.5)

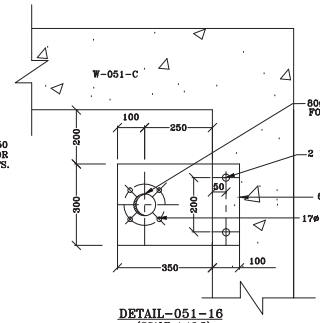

DETAIL-051-16
(SCALE 1:12.5)

NOTE:-
TO TRIP THE PUMP WHEN LEVEL IS
LOW AND TO START THE PUMP WHEN
LEVEL IS HIGH(TYP)

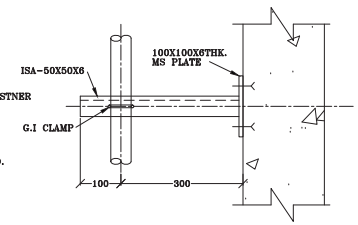

DETAIL-051-12A
(SCALE 1:12.5)

RRB/17-04D(5)/ DT 16.11.2018

PROJECT	2 x 660 MW ENNORE SEZ STPP (AT ASH DYKE OF NCTPS, CHENNAI)
OWNER	TAMILNADU GENERATION & DISTRIBUTION CORPORATION LIMITED
CONSULTANT: DESEIN	DESEIN PVT. LIMITED CONSULTING ENGINEERS NEW DELHI; HYDERABAD- INDIA
CONTRACTOR BHEL	BHARAT HEAVY ELECTRICALS LTD POWER SECTOR PROJECT ENGINEERING MANAGEMENT NOIDA,NEW DELHI
ORIGINATOR CLEAR	PACKAGE CONTRACTOR :- CLEAR WATER LTD. B-14/1, OKHLA INDUSTRIAL AREA PHASE-II, NEW DELHI-110020 PHONE :-26386095 E-mail :-clearwater@bol.net.in
CLEAWAT DRG. NO.	17-04/A051 (SH. 1 OF 1)
VER	00
BHEL DRG.NO.	PE-VO-412-164-A048
REV.	00
TITLE:-	G.A DRGS. FOR OILY WASTE SUMP FROM TRANSFORMER YARD PIT (SUMP TAG NO. E-1 FOR UNIT NO.1; SUMP TAG NO E-4 FOR UNIT -2) EFFLUENT TREATMENT PLANT
SCALE	1:50

NOTES:-
1. ALL DIMENSIONS ARE IN mm AND ALL LEVELS ARE IN METER.
2. THIS DRG. SHOULD NOT BE SCALED.
3. IF IN DOUBT , PLEASE ASK.
4. IN CASE OF ANY DISCREPANCY IN THE DRAWING PLEASE CONTACT M/S CLEAR WATER LTD. BEFORE EXECUTION .
5. EL 0.00M CORRESPONDS TO RL 10.00 M WHICH IS FFL OF TG BUILDING
6. LOCATION AND ORIENTATION OF SUMP SHALL BE AS DECIDED BY BHEL AT SITE.ALTERNATIVELY , PLEASE REFER TO PLOT PLAN.
7. ALL EMBEDMENTS/INSERTS SHALL BE PLACED TO CORRECT LINE/LEVELS AS INDICATED IN G.A. DRAWINGS & SHALL BE MAINTAINED IN POSITION DURING CONCRETING.
8. FOR OTHER NOTES REFER TO CLEAWAT DRG. NO. 17-04/A011
9. ONE PUMP IS TO WORK AT A TIME.
10. M.S RUNG LADDER TO BE PAINTED WITH TWO COATS OF EPOXY PAINT AFTER ERECTION (UNDER ERECTION ACTIVITIES).
11. EXTERNAL FACE OF WALL ABOVE GROUND LEVEL SHALL HAVE 12mm PLASTER IN CM 1:3 UP TO 300 mm BELOW FGL; PLASTER SHALL HAVE TWO COATS OF CEMENT WASH.

IDENTIFICATION OF DRG. / PLAN / SECTION
17-04/A 0 15-1 0
WORK DICIPLINE
SHEET NO.
PLAN/SECTION NO.
DRG.NO.
DRG. APPROVED BY PUR.
JOB NO.

LEGEND
F.G.L. - FINISH GROUND LEVEL
T.W.L. - TOP WATER LEVEL

REV.No.	DETAILS REVISIONS	DATE
0	RE-SUBMITTED FOR APPROVAL	16.11.2018
0	SUBMITTED FOR APPROVAL	
2	P & I DIAGRAM	17-04/A012
1	LAYOUT PLAN	17-04/A011

SL.NO.	DESCRIPTION	CLEWAT DRG. NO.
	REFERENCE DRGS.	

CAUTION
THIS DRG. IS CONFIDENTIAL AND IS THE PROPERTY OF "CLEAR WATER LTD" ITMUST NOT BE DISCLOSED/COPIED OR LENT TO A THIRD PARTY WITHOUT WRITTEN CONSENT OF CLEAR WATER LTD.

QUALITY POLICY
IN ITS QUEST TO SATISFY THE CUSTOMER, CLEAR WATER LTD. PURSUES CONTINUAL IMPROVEMENT IN THE QUALITY OF ITS PRODUCTS, SERVICES AND PERFORMANCE LEADING TO TOTAL CUSTOMER SATISFACTION AND BUSINESS GROWTH THROUGH DEDICATION, COMMITMENT AND TEAM WORK OF ALL EMPLOYEES.

QUALITY OBJECTIVES
- CUSTOMER SATISFACTION BY IMPROVING DELIVERY / COMPLETION PERIOD & RESPONSE.
- QUALITY OF SUPPLIES BY IMPROVING SUB-VENDOR PERFORMANCE.

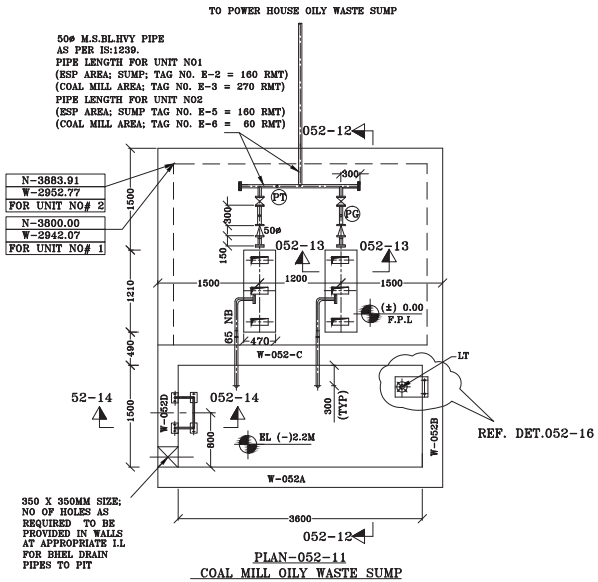

PLAN-052-11
COAL MILL OILY WASTE SUMP
(FOR LOCATION REF BHEL PLOT PLAN DRG NO.PE-DG-412-100-M001 (REV.03)
(SCALE 1:25)

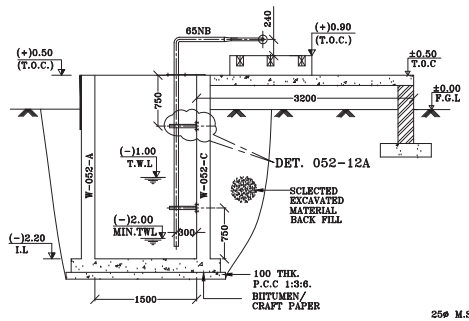

SECTION-052-12
(SCALE 1:25)

NOTE:-
TO TRIP THE PUMP WHEN LEVEL IS LOW AND TO START THE PUMP WHEN LEVEL IS HIGH (TYP)

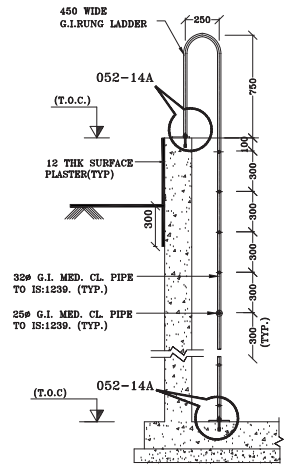

SECTION -052-14
(SCALE 1:25)

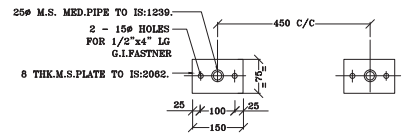

DETAIL-052-14A (PLAN)
(SCALE 1:10)

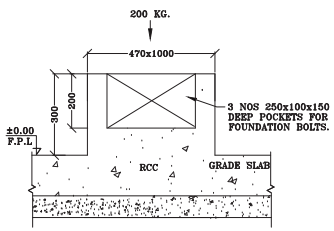

DETAIL 052-13
(TYPICAL SCREW PUMP FOUNDATION PADS)
(SCALE 1:12.5)

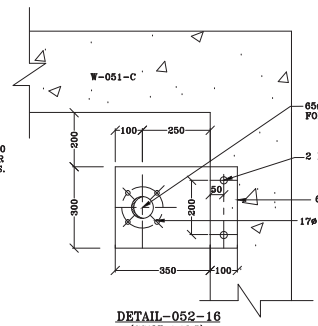

DETAIL-052-16
(SCALE 1:12.5)

NOTE:-
TO TRIP THE PUMP WHEN LEVEL IS LOW AND TO START THE PUMP WHEN LEVEL IS HIGH(TYP)

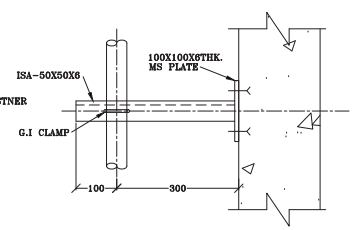

DETAIL-052-12A
(SCALE 1:12.5)

NOTES:-
1. ALL DIMENSIONS ARE IN mm AND ALL LEVELS ARE IN METER.
2. THIS DRG. SHOULD NOT BE SCALED.
3. IF IN DOUBT , PLEASE ASK.
4. IN CASE OF ANY DISCREPANCY IN THE DRAWING PLEASE CONTACT M/S CLEAR WATER LTD. BEFORE EXECUTION .
5. EL 0.00M CORRESPONDS TO RL 10.00 M WHICH IS FFL OF TG BUILDING
6. LOCATION AND ORIENTATION OF SUMP SHALL BE AS DECIDED BY BHEL AT SITE.ALTERNATIVELY , PLEASE REFER TO PLOT PLAN.
7. ALL EMBEDMENTS/INSERTS SHALL BE PLACED TO CORRECT LINE/LEVELS AS INDICATED IN G.A. DRAWINGS & SHALL BE MAINTAINED IN POSITION DURING CONCRETING.
8. FOR OTHER NOTES REFER TO CLEAWAT DRG. NO. 17-04/A011
9. ONE PUMP IS TO WORK AT A TIME.
10. M.S RUNG LADDER TO BE PAINTED WITH TWO COATS OF EPOXY PAINT AFTER ERECTION (UNDER ERECTION ACTIVITIES).
11. EXTERNAL FACE OF WALL ABOVE GROUND LEVEL SHALL HAVE 12mm PLASTER IN CM 1:3 UP TO 300 mm BELOW FGL; PLASTER SHALL HAVE TWO COATS OF CEMENT WASH.

IDENTIFICATION OF DRG. / PLAN / SECTION
17-04/A 0 15-2 0
WORK DICIPLINE
SHEET NO.
PLAN/SECTION NO.
DRG.NO.
DRG. APPROVED BY PUR.
JOB NO.

LEGEND
F.G.L. - FINISH GROUND LEVEL
T.W.L. - TOP WATER LEVEL

REV.No.	DETAILS REVISIONS	DATE
0	RE-SUBMITTED FOR APPROVAL	16.11.2018
0	SUBMITTED FOR APPROVAL	
2	P & I DIAGRAM	17-04/A012
1	LAYOUT PLAN	17-04/A011

SL.NO.	DESCRIPTION	CLEWAT DRG. NO.

REFERENCE DRGS.

CAUTION
THIS DRG. IS CONFIDENTIAL AND IS THE PROPERTY OF "CLEAR WATER LTD" ITMUST NOT BE DISCLOSED/COPIED OR LENT TO A THIRD PARTY WITHOUT WRITTEN CONSENT OF CLEAR WATER LTD.

QUALITY POLICY
IN ITS QUEST TO SATISFY THE CUSTOMER, CLEAR WATER LTD. PURSUES CONTINUAL IMPROVEMENT IN THE QUALITY OF ITS PRODUCTS, SERVICES AND PERFORMANCE LEADING TO TOTAL CUSTOMER SATISFACTION AND BUSINESS GROWTH THROUGH DEDICATION, COMMITMENT AND TEAM WORK OF ALL EMPLOYEES.

QUALITY OBJECTIVES
- CUSTOMER SATISFACTION BY IMPROVING DELIVERY / COMPLETION PERIOD & RESPONSE.
- QUALITY OF SUPPLIES BY IMPROVING SUB-VENDOR PERFORMANCE.

RRB/17-04D(5)/ DT 16.11.2018

PROJECT	2 x 660 MW ENNORE SEZ STPP (AT ASH DYKE OF NCTPS, CHENNAI)
OWNER	TAMILNADU GENERATION & DISTRIBUTION CORPORATION LIMITED
CONSULTANT:	DESEIN PVT. LIMITED CONSULTING ENGINEERS NEW DELHI; HYDERABAD- INDIA
CONTRACTOR	BHARAT HEAVY ELECTRICALS LTD POWER SECTOR PROJECT ENGINEERING MANAGEMENT NOIDA.NEW DELHI
ORIGINATOR	PACKAGE CONTRACTOR :- CLEAR WATER LTD. B-14/1, OKHLA INDUSTRIAL AREA PHASE-II, NEW DELHI-110020 PHONE :-26386095 E-mail :-clearwater@bol.net.in
CLEWAT DRG. NO.	17-04/A052 (SH. 1 OF 1)
VER	00
BHEL DRG.NO.	PE-V0-412-164-A047
REV.	00
TITLE:-	G.A DRG. FOR COAL MILL OILY WASTE SUMP (SUMP TAG NO. E-2 & 3 FOR UNIT NO.-1; SUMP TAG NO. E-5 & 6 FOR UNIT NO.-2) EFFLUENT TREATMENT PLANT
SCALE	1:50

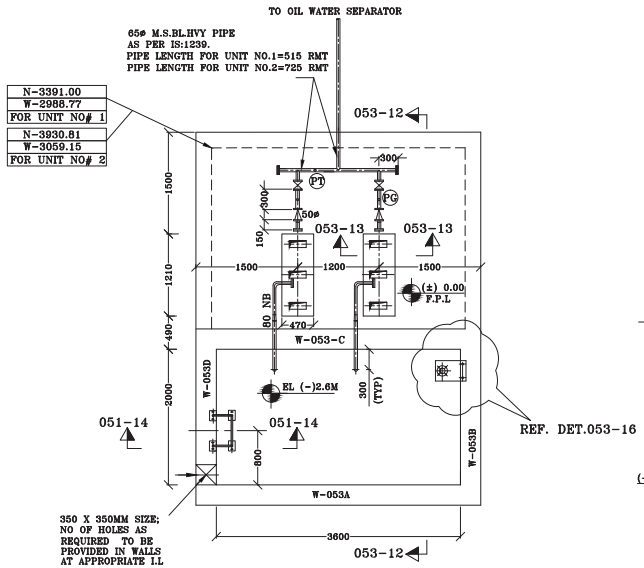

PLAN-053-11
POWER HOUSE OILY WASTE SUMP
(FOR LOCATION REF BHEL PLOT PLAN DRG NO.PE-DG-412-100-M001(REV.03)
(SCALE 1:25)

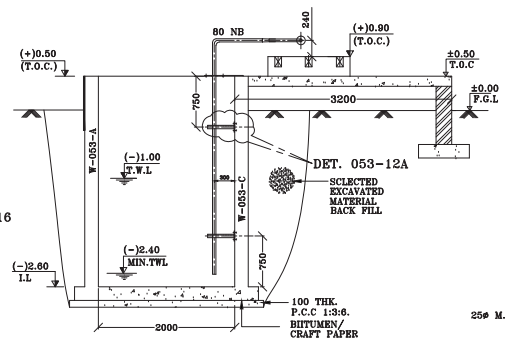

SECTION-053-12
(SCALE 1:25)

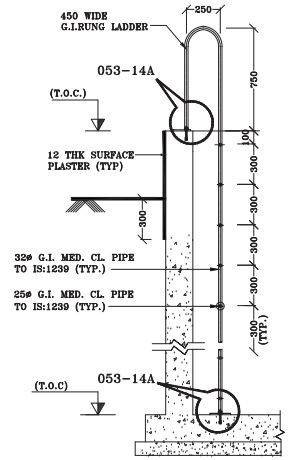

SECTION-053-14
(SCALE 1:25)

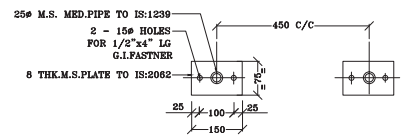

DETAIL-053-14A (PLAN)
(SCALE 1:10)

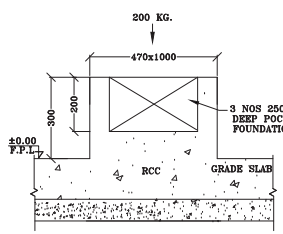

DETAIL 053-13
(TYPICAL SCREW PUMP FOUNDATION PADS)
(SCALE 1:12.5)

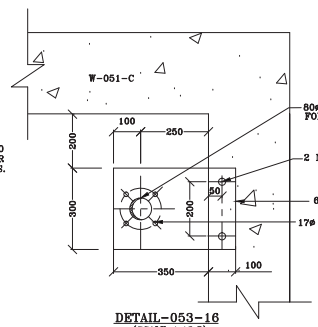

DETAIL-053-16
(SCALE 1:12.5)

NOTE:-
TO TRIP THE PUMP WHEN LEVEL IS
LOW AND TO START THE PUMP WHEN
LEVEL IS HIGH(TYP)

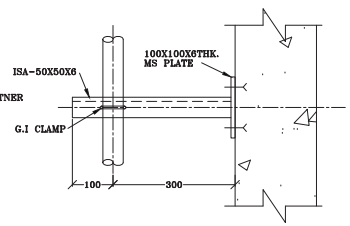

DETAIL-053-12A
(SCALE 1:12.5)

NOTES:-
1. ALL DIMENSIONS ARE IN mm AND ALL LEVELS ARE IN METER.
2. THIS DRG. SHOULD NOT BE SCALED.
3. IF IN DOUBT , PLEASE ASK.
4. IN CASE OF ANY DISCREPANCY IN THE DRAWING PLEASE CONTACT M/S CLEAR WATER LTD. BEFORE EXECUTION .
5. EL 0.00M CORRESPONDS TO RL 10.00 M WHICH IS FFL OF TG BUILDING
6. LOCATION AND ORIENTATION OF SUMP SHALL BE AS DECIDED BY BHEL AT SITE.ALTERNATIVELY , PLEASE REFER TO PLOT PLAN.
7. ALL EMBEDMENTS/INSERTS SHALL BE PLACED TO CORRECT LINE/LEVELS AS INDICATED IN G.A. DRAWINGS & SHALL BE MAINTAINED IN POSITION DURING CONCRETING.
8. FOR OTHER NOTES REFER TO CLEAWAT DRG. NO. 17-04/A011
9. ONE PUMP IS TO WORK AT A TIME.
10. M.S RUNG LADDER TO BE PAINTED WITH TWO COATS OF EPOXY PAINT AFTER ERECTION (UNDER ERECTION ACTIVITIES).
11. EXTERNAL FACE OF WALL ABOVE GROUND LEVEL SHALL HAVE 12mm PLASTER IN CM 1:3 UP TO 300 mm BELOW FGL; PLASTER SHALL HAVE TWO COATS OF CEMENT WASH.

IDENTIFICATION OF DRG. / PLAN / SECTION
17-04/A 0 15-1 0
WORK DICIPLINE
SHEET NO.
PLAN/SECTION NO.
DRG.NO.
DRG. APPROVED BY PUR.
JOB NO.

LEGEND
F.G.L. - FINISH GROUND LEVEL
T.W.L. - TOP WATER LEVEL

REV.No.	DETAILS REVISIONS	DATE
0	RE-SUBMITTED FOR APPROVAL	16.11.2016
0	SUBMITTED FOR APPROVAL	
2	P & I DIAGRAM	17-04/A012
1	LAYOUT PLAN	17-04/A011

SL.NO.	DESCRIPTION	CLEWAT DRG. NO.

REFERENCE DRGS.

CAUTION
THIS DRG. IS CONFIDENTIAL AND IS THE PROPERTY OF "CLEAR WATER LTD" ITMUST NOT BE DISCLOSED/COPIED OR LENT TO A THIRD PARTY WITHOUT WRITTEN CONSENT OF CLEAR WATER LTD.

QUALITY POLICY
IN ITS QUEST TO SATISFY THE CUSTOMER, CLEAR WATER LTD. PURSUES CONTINUAL IMPROVEMENT IN THE QUALITY OF ITS PRODUCTS, SERVICES AND PERFORMANCE LEADING TO TOTAL CUSTOMER SATISFACTION AND BUSINESS GROWTH THROUGH DEDICATION, COMMITMENT AND TEAM WORK OF ALL EMPLOYEES.

QUALITY OBJECTIVES
- CUSTOMER SATISFACTION BY IMPROVING DELIVERY / COMPLETION PERIOD & RESPONSE.
- QUALITY OF SUPPLIES BY IMPROVING SUB-VENDOR PERFORMANCE.

RRB/17-04D(5)/ DT 16.11.2016

PROJECT	2 x 660 MW ENNORE SEZ STPP (AT ASH DYKE OF NCTPS, CHENNAI)
OWNER	TAMILNADU GENERATION & DISTRIBUTION CORPORATION LIMITED
CONSULTANT:	DESEIN PVT. LIMITED CONSULTING ENGINEERS NEW DELHI; HYDERABAD- INDIA
CONTRACTOR	BHARAT HEAVY ELECTRICALS LTD POWER SECTOR PROJECT ENGINEERING MANAGEMENT NOIDA,NEW DELHI
ORIGINATOR	PACKAGE CONTRACTOR :- CLEAR WATER LTD. B-14/1, OKHLA INDUSTRIAL AREA PHASE-II, NEW DELHI-110020 PHONE :-26386095 E-mail :-clearwater@bol.net.in
CLEWAT DRG. NO.	17-04/A053 (SH. 1 OF 1)
VER	00
BHEL DRG.NO.	PE-V0-412-164-A048
REV.	00
TITLE:-	G.A DRG. FOR P/H OILY WASTE SUMP (SUMP TAG NO. E-9 FOR UNIT NO.-1; SUMP TAG NO. E-10 FOR UNIT NO.-2) EFFLUENT TREATMENT PLANT
SCALE	1:50

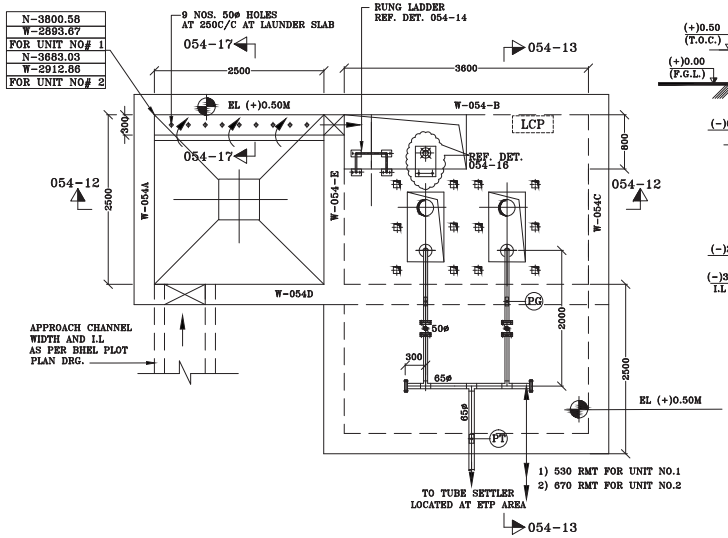

PLAN-054-11
PRE-SETTLING PIT AND OVERFLOW SUMP
(FOR LOCATION REF BHEL PLOT PLAN DRG NO.PE-DG-412-100-M001(REV.03)
(SCALE 1:50)

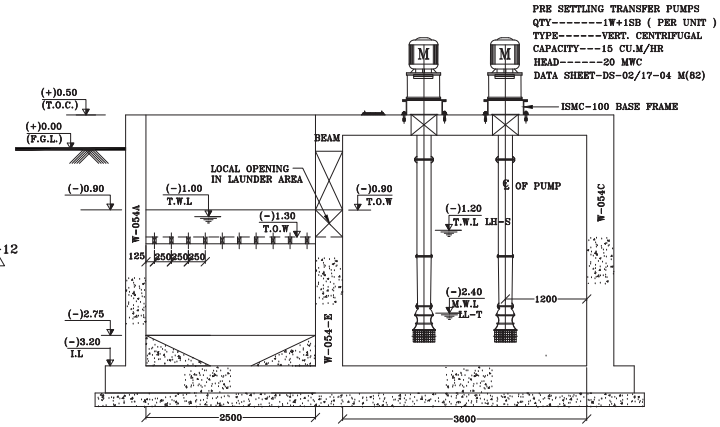

SECTION-054-12
(SCALE 1:50)

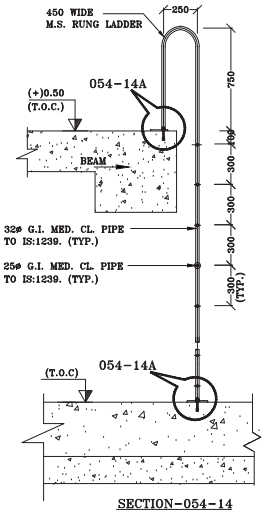

SECTION-054-14
(SCALE 1:12.5)

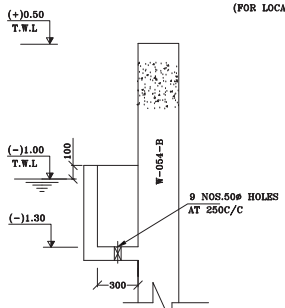

SECTION-054-17
(SCALE 1:25

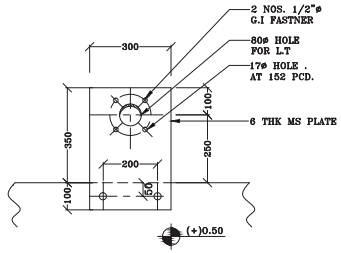

DETAIL-054-16
INSTALLATION DET. OF LEVEL TRANSMITTER
(SCALE 1:12.5)

NOTE:-
TO TRIP THE PUMP WHEN LEVEL IS LEVEL IS HIGH (TYP)

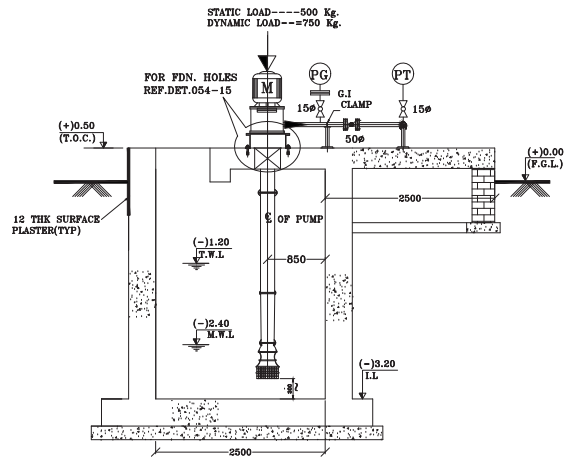

SECTION-054-13
(SCALE 1:50)

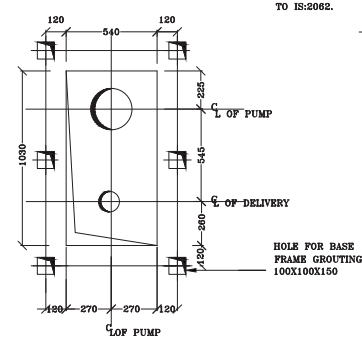

DET.-054-15
(CUT OUT IN SLAB FOR VERTICAL PUMPS)
(SCALE-1:12.5)

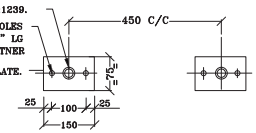

DETAIL-054-14A (PLAN)
(SCALE 1:10)

NOTES:-
1. ALL DIMENSIONS ARE IN mm AND ALL LEVELS ARE IN METER.
2. THIS DRG. SHOULD NOT BE SCALED.
3. IF IN DOUBT , PLEASE ASK.
4. IN CASE OF ANY DISCREPANCY IN THE DRAWING PLEASE CONTACT M/S CLEAR WATER LTD. BEFORE EXECUTION .
5. EL 0.00M CORRESPONDS TO RL 10.00 M WHICH IS FFL OF TG BUILDING
6. LOCATION AND ORIENTATION OF SUMP SHALL BE AS DECIDED BY BHEL AT SITE.ALTERNATIVELY , PLEASE REFER TO PLOT PLAN.
7. ALL EMBEDMENTS/INSERTS SHALL BE PLACED TO CORRECT LINE/LEVELS AS INDICATED IN G.A. DRAWINGS & SHALL BE MAINTAINED IN POSITION DURING CONCRETING.
8. FOR OTHER NOTES REFER TO CLEAWAT DRG. NO. 17-04/A011
9. ONE PUMP IS TO WORK AT A TIME.
10. M.S RUNG LADDER TO BE PAINTED WITH TWO COATS OF EPOXY PAINT AFTER ERECTION (UNDER ERECTION ACTIVITIES).
11. EXTERNAL FACE OF WALL ABOVE GROUND LEVEL SHALL HAVE 12mm PLASTER IN CM 1:3 UP TO 300 mm BELOW FGL; PLASTER SHALL HAVE TWO COATS OF CEMENT WASH.
12. DELIVERY HEADERS SHALL RUN ON PEDESTAL (BY BHEL) UP TO NEAREST PIPE RACK.

IDENTIFICATION OF DRG. / PLAN / SECTION
17-04/A 0 54-1 0
WORK DICIPLINE
SHEET NO.
PLAN/SECTION NO.
DRG.NO.
DRG. APPROVED BY PUR.
JOB NO.

LEGEND
F.G.L. - FINISH GROUND LEVEL
T.W.L. - TOP WATER LEVEL

REV.No.	DETAILS REVISIONS	DATE
0A	RE-SUBMITTED FOR APPROVAL	17.11.2018
0	SUBMITTED FOR APPROVAL	
2	P & I DIAGRAM	17-04/A012
1	LAYOUT PLAN	17-04/A011
SL.NO.	DESCRIPTION	CLEWAT DRG. NO.

REFERENCE DRGS.

CAUTION
THIS DRG. IS CONFIDENTIAL AND IS THE PROPERTY OF "CLEAR WATER LTD" ITMUST NOT BE DISCLOSED/COPIED OR LENT TO A THIRD PARTY WITHOUT WRITTEN CONSENT OF CLEAR WATER LTD.

QUALITY POLICY
IN ITS QUEST TO SATISFY THE CUSTOMER, CLEAR WATER LTD. PURSUES CONTINUAL IMPROVEMENT IN THE QUALITY OF ITS PRODUCTS, SERVICES AND PERFORMANCE LEADING TO TOTAL CUSTOMER SATISFACTION AND BUSINESS GROWTH THROUGH DEDICATION, COMMITMENT AND TEAM WORK OF ALL EMPLOYEES.

QUALITY OBJECTIVES
- CUSTOMER SATISFACTION BY IMPROVING DELIVERY / COMPLETION PERIOD & RESPONSE.
- QUALITY OF SUPPLIES BY IMPROVING SUB-VENDOR PERFORMANCE.

RRB/17-04D(5)/ DT. 17.11.2018

PROJECT	2 x 660 MW ENNORE SEZ STPP (AT ASH DYKE OF NCTPS, CHENNAI)
OWNER	TAMILNADU GENERATION & DISTRIBUTION CORPORATION LIMITED
CONSULTANT:	DESEIN PVT. LIMITED CONSULTING ENGINEERS NEW DELHI: HYDERABAD- INDIA
CONTRACTOR	BHARAT HEAVY ELECTRICALS LTD POWER SECTOR PROJECT ENGINEERING MANAGEMENT NOIDA,NEW DELHI
ORIGINATOR	PACKAGE CONTRACTOR :- CLEAR WATER LTD. B-14/1, OKHLA INDUSTRIAL AREA PHASE-II, NEW DELHI-110020 PHONE :-28386095 E-mail :-clearwater@bol.net.in
CLEWAT DRG. NO.	17-04/A054 (SH. 1 OF 1) VER 0A
BHEL DRG.NO.	PE-V0-412-164-A049 REV. 00
TITLE:-	G.A DRG.FOR PRE-SETTLING PIT & OVERFLOW SUMP AT ESP AREA (SUMP TAG NO. E-7 FOR UNIT NO.-1; SUMP TAG NO. E-8 FOR UNIT NO.-2) EFFLUENT TREATMENT PLANT
SCALE	1:50

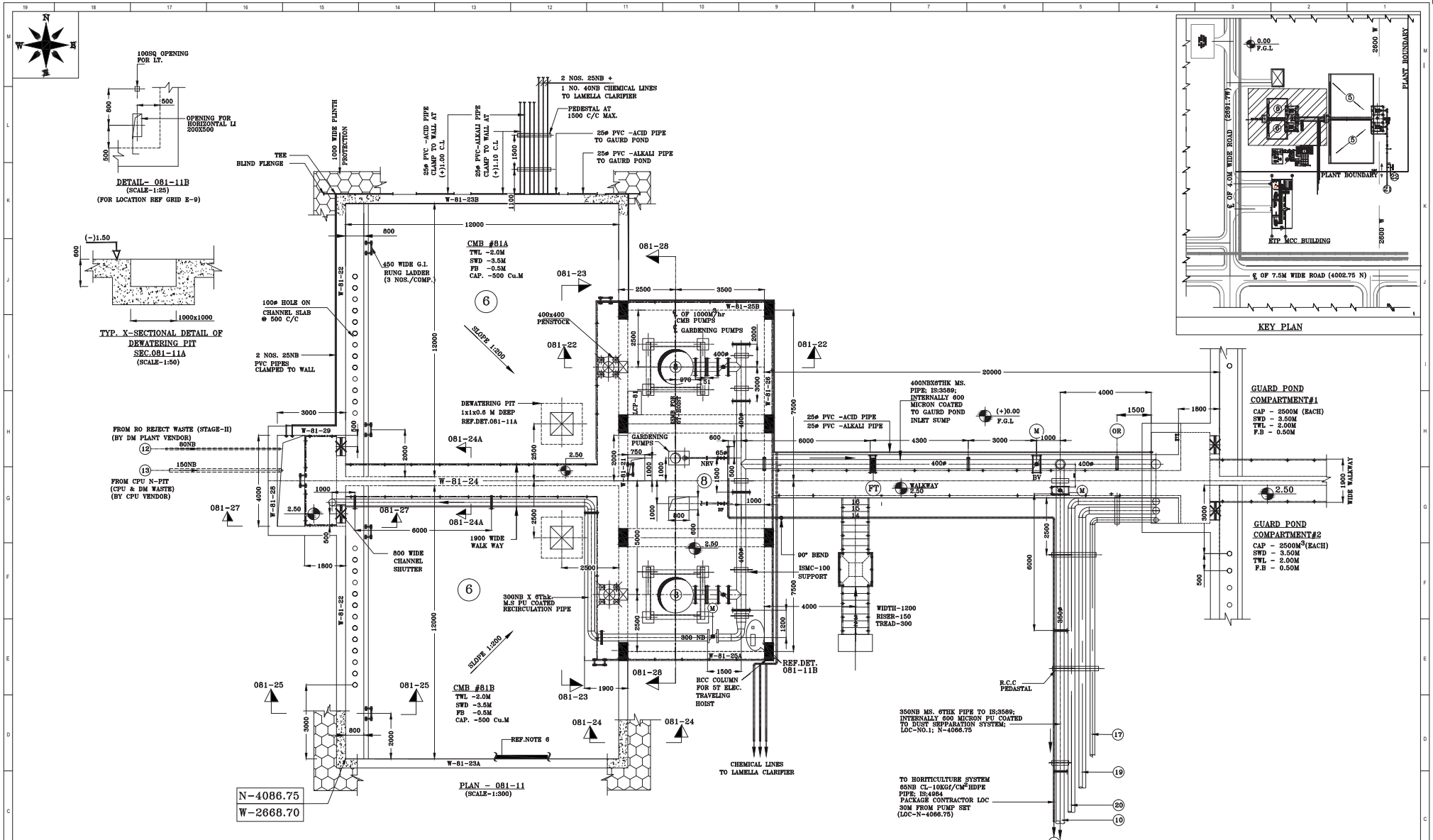
100SQ OPENING FOR LT.
OPENING FOR HORIZONTAL LI 200X500
DETAIL- 081-11B
(SCALE-1:25)
(FOR LOCATION REF GRID E-9)
2 NOS. 25NB + 1 NO. 40NB CHEMICAL LINES TO LAMELLA CLARIFIER
PEDESTAL AT 1500 C/C MAX.
25ø PVC -ACID PIPE TO GAURD POND
25ø PVC -ALKALI PIPE TO GAURD POND
TEE BLIND FLENGE
1000 WIDE PLINTH PROTECTION
25ø PVC -ACID PIPE CLAMP TO WALL AT (+)1.05 C.L
25ø PVC-ALKALI PIPE CLAMP TO WALL AT (+)1.10 C.L
W-81-23B
CMB #81A
TWL -2.0M
SWD -3.5M
FB -0.5M
CAP. -500 Cu.M
450 WIDE G.I. RUNG LADDER (3 NOS./COMP.)
100ø HOLE ON CHANNEL SLAB @ 500 C/C
2 NOS. 25NB PVC PIPES CLAMPED TO WALL
TYP. X-SECTIONAL DETAIL OF DEWATERING PIT SEC.081-11A
(SCALE-1:50)
1000x1000
DEWATERING PIT 1x1x0.6 M DEEP REF.DET.081-11A
FROM RO REJECT WASTE (STAGE-II) (BY DM PLANT VENDOR)
80NB
150NB
FROM CPU N-PIT (CPU & DM WASTE) (BY CPU VENDOR)
800 WIDE CHANNEL SHUTTER
1900 WIDE WALK WAY
SLOPE 1:200
300NB X 6THK M.S PU COATED RECIRCULATION PIPE
CMB #81B
TWL -2.0M
SWD -3.5M
FB -0.5M
CAP. -500 Cu.M
REF.NOTE 6
W-81-23A
PLAN - 081-11
(SCALE-1:300)
N-4086.75
W-2668.70
W-81-25B
W-81-25A
W-81-24
W-81-26
W-81-27
W-81-28
W-81-29
W-81-22
W-81-32
W-81-33
W-81-34
W-81-35
W-81-36
W-81-37
W-81-38
W-81-39
W-81-40
W-81-41
W-81-42
W-81-43
W-81-44
W-81-45
W-81-46
W-81-47
W-81-48
W-81-49
W-81-50
W-81-51
W-81-52
W-81-53
W-81-54
W-81-55
W-81-56
W-81-57
W-81-58
W-81-59
W-81-60
W-81-61
W-81-62
W-81-63
W-81-64
W-81-65
W-81-66
W-81-67
W-81-68
W-81-69
W-81-70
W-81-71

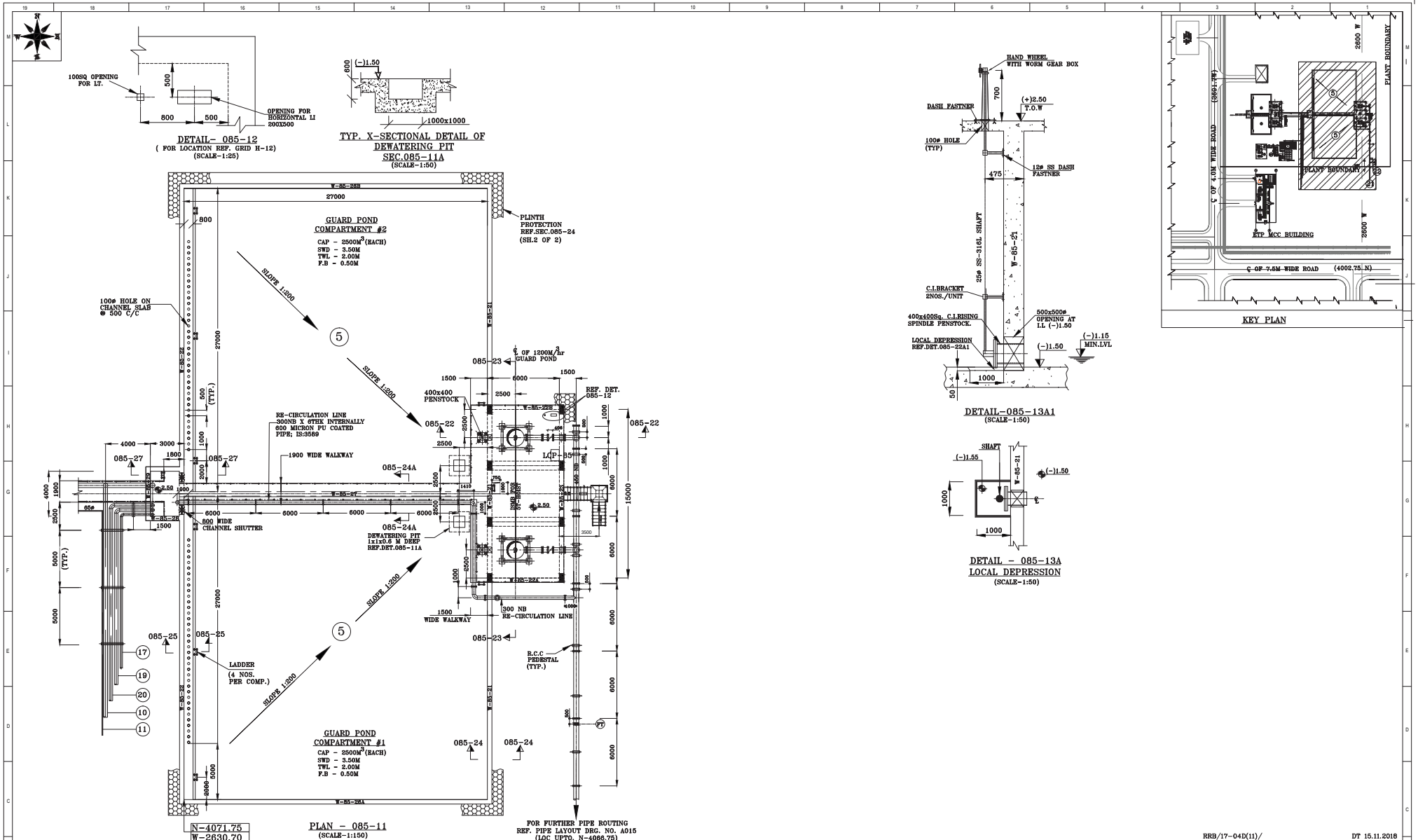

NOTES:-

1. ALL DIMENSIONS ARE IN mm. AND LEVELS ARE IN METRES.
2. THIS DRAWING SHOULD NOT BE SCALED.
3. IF IN DOUBT, PLEASE ASK.
4. EL 0.00M CORRESPONDS TO RL 10.00 M WHICH IS FFL OF TG BUILDING
5. FOR TYPICAL NOTES REF. LAY OUT DRG. NO.A011; BHEL DRG. NO. PE-V0-412-164A-A002(SH 1&2)
6.1 ALL RCC SURFACE COMING IN CONTACT WITH SEA WATER SHALL BE PAINTED IN LINE WITH VOLUME VI OF SPECIFICATION.
6.2 ALL PIPING COMING IN CONTACT WITH SEA WATER SHALL BE INTERNALLY & EXTERNALLY PAINTED AS PER SPECIFICATION.
7. RUNG LADDERS (PU COATED) ARE IN CLEAR WATER SCOPE OF SUPPLY.
8. FOR OTHER NOTE PLEASE REFER SH. 2 OF 2

IDENTIFICATION OF DRG. / PLAN / SECTION

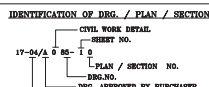

LEGEND
F.G.L. - FINISH GROUND LEVEL
T.W.L. - TOP WATER LEVEL
T.O.W. - TOP OF WALL

REV.No.	DETAILS REVISIONS	DATE
01B	REVISED AS PER DISCUSSION WITH BHEL	15.11.2016
01	RE.SUBMITTED FOR APPROVAL	29.10.2016
0A	RE.SUBMITTED FOR APPROVAL	04.04.2016
00	FOR APPROVAL	12.03.2016
2	P & I FOR ETP	A012
1	ETP EQUIPMENT LAYOUT	A011
SL. NO.	DESCRIPTION	CLEWAY DRG. NO.

REFERENCE DRGS.

CAUTION
THIS DRG. IS CONFIDENTIAL AND IS THE PROPERTY OF "CLEAR WATER LTD" ITMUST NOT BE DISCLOSEDORCOPIED OR LENT TO A THIRD PARTY WITHOUT WRITTEN CONSENT OF CLEAR WATER LTD.

QUALITY POLICY

IN ITS QUEST TO SATISFY THE CUSTOMER, CLEAR WATER LTD. PURSUES CONTINUAL IMPROVEMENT IN THE QUALITY OF ITS PRODUCTS, SERVICES AND PERFORMANCE LEADING TO TOTAL CUSTOMER SATISFACTION AND BUSINESS GROWTH THROUGH DEDICATION, COMMITMENT AND TEAM WORK OF ALL EMPLOYEES.

QUALITY OBJECTIVES

- CUSTOMER SATISFACTION BY IMPROVING DELIVERY / COMPLETION PERIOD & RESPONSE.
- QUALITY OF SUPPLIES BY IMPROVING SUB-VENDOR PERFORMANCE.
- CAPABILITY OF HUMAN RESOURCES BY UPGRADING SKILL AND COMPETENCE.

RRB/17-04D(11)/ DT 15.11.2016

PROJECT: 2 x 660 MW ENNORE SEZ STPP (AT ASH DYKE OF NCTPS, CHENNAI)

OWNER: TAMILNADU GENERATION & DISTRIBUTION CORPORATION LIMITED

CONSULTANT: DESIEN PVT. LIMITED
CONSULTING ENGINEERS
NEW DELHI, HYDERABAD - INDIA

CONTRACTOR: BHARAT HEAVY ELECTRICALS LTD
POWER SECTOR
PROJECT ENGINEERING MANAGEMENT
NOIDA,NEW DELHI

DESIGNATION: PACKAGE CONTRACTOR :-
CLEAR WATER LTD.
B-14/1, OKHLA INDUSTRIAL AREA
PHASE-II, NEW DELHI-110020
PHONE : -26386086
E-mail : -clearwater@bol.net.in

CLEAWAY DRG. NO. 17-04/A085 (SH. 1 OF 2) VER 0B
BHEL DRG.NO. PE-V0-412-164A-A052 (SH. 1 OF 2) REV. 01

TITLE:- CIVIL INPUT DRGS.OF ETP AREA SUMPS & LAMELLA CLARIFIER MECH. GA OF GUARD POND

SCALE 1:150

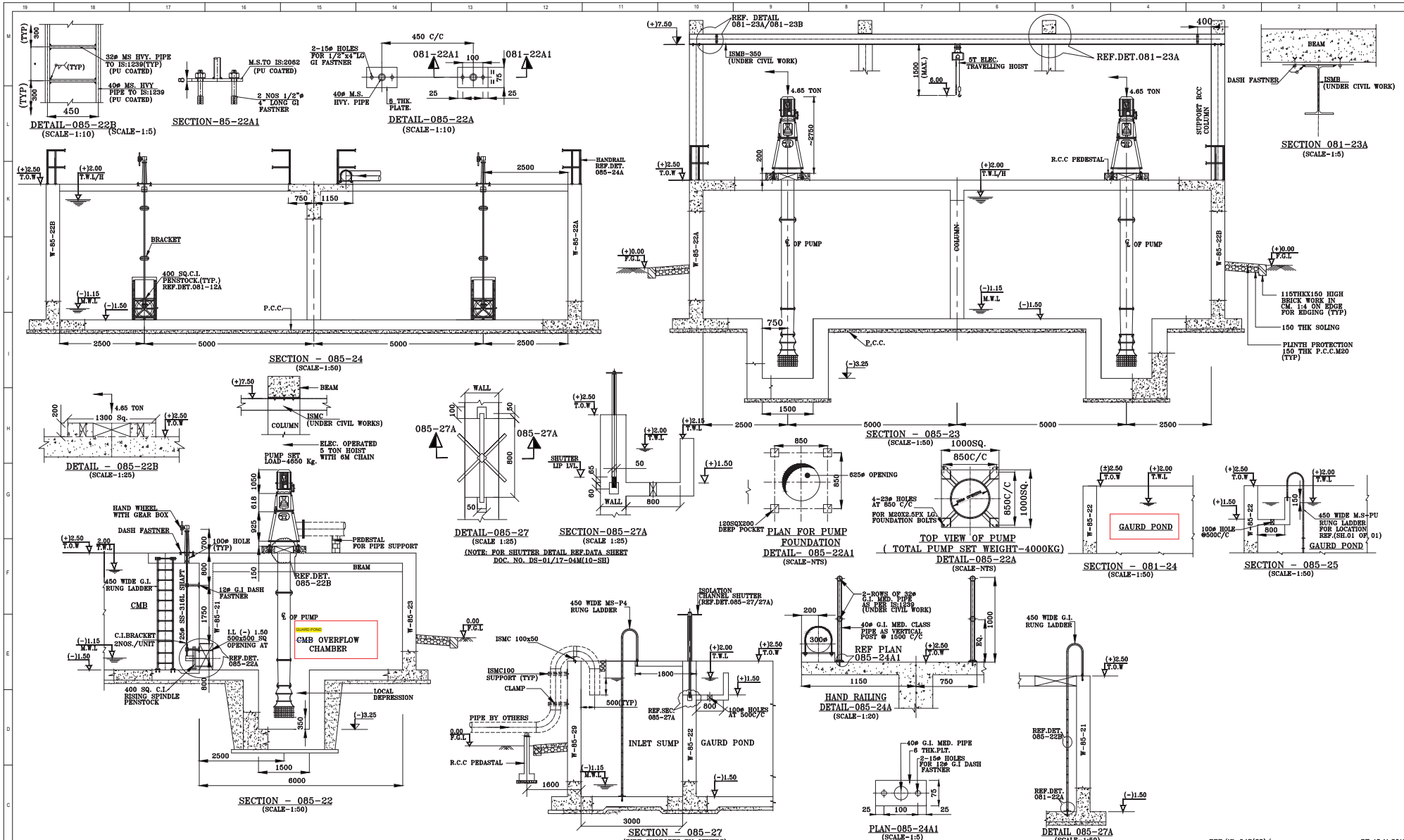
DETAIL-085-22B
(SCALE-1:10) (SCALE-1:5)
SECTION-85-22A1
DETAIL-085-22A
(SCALE-1:10)
SECTION - 085-24
(SCALE-1:50)
SECTION - 085-23
(SCALE-1:50)
SECTION 081-23A
(SCALE-1:5)
DETAIL - 085-22B
(SCALE-1:25)
DETAIL-085-27
(SCALE 1:25)
SECTION-085-27A
(SCALE 1:25)
PLAN FOR PUMP FOUNDATION
DETAIL- 085-22A1
(SCALE-NTS)
TOP VIEW OF PUMP
(TOTAL PUMP SET WEIGHT-4000KG)
DETAIL-085-22A
(SCALE-NTS)
SECTION - 081-24
(SCALE-1:50)
SECTION - 085-25
(SCALE-1:50)
SECTION - 085-22
(SCALE-1:50)
SECTION - 085-27
(PIPE SUPPORTS BY OTHERS)
(SCALE-1:50)
HAND RAILING
DETAIL-085-24A
(SCALE-1:20)
PLAN-085-24A1
(SCALE-1:5)
DETAIL 085-27A
(SCALE-1:50)
INLET SUMP
GAURD POND
CMB OVERFLOW CHAMBER
PUMP SET LOAD-4650 Kg.
ELEC. OPERATED 5 TON HOIST WITH 6M CHAIN
4.65 TON
5T ELEC. TRAVELLING HOIST
R.C.C PEDESTAL
SUPPORT RCC COLUMN
DASH FASTNER
ISMB (UNDER CIVIL WORK)
115THKX150 HIGH BRICK WORK IN CM. 1:4 ON EDGE FOR EDGING (TYP)
150 THK SOLING
PLINTH PROTECTION 150 THK P.C.C.M20 (TYP)
BRACKET
400 SQ.C.I. PENSTOCK.(TYP.) REF.DET.081-12A
P.C.C.
HANDRAIL REF.DET. 085-24A
HAND WHEEL WITH GEAR BOX
450 WIDE G.I. RUNG LADDER
12ø G.I DASH FASTNER
C.I.BRACKET 2NOS./UNIT
400 SQ. C.I. RISING SPINDLE PENSTOCK
LOCAL DEPRESSION
450 WIDE MS-P4 RUNG LADDER
ISOLATION CHANNEL SHUTTER (REF.DET.085-27/27A)
ISMC 100x50
ISMC100 SUPPORT (TYP)
CLAMP
PIPE BY OTHERS
R.C.C PEDASTAL
REF.SEC. 085-27A
100ø HOLES AT 500C/C
2-ROWS OF 32ø G.I. MED. PIPE AS PER IS:1239 (UNDER CIVIL WORK)
40ø G.I. MED. CLASS PIPE AS VERTICAL POST @ 1500 C/C
REF PLAN 085-24A1
450 WIDE G.I. RUNG LADDER
REF.DET. 085-22B
REF.DET. 081-22A
GAURD POND
BEAM
COLUMN
ISMC (UNDER CIVIL WORKS)
WALL
SHUTTER LIP LVL
625ø OPENING
4-23ø HOLES AT 850 C/C FOR M20X2.5PX LG FOUNDATION BOLTS
120SQX200 DEEP POCKET
1000SQ.
850C/C
40ø G.I MED. PIPE 6 THK.PLT.
2-15ø HOLES FOR 12ø G.I DASH FASTNER
NOTES:-
1. ALL DIMENSIONS ARE IN mm. AND LEVELS ARE IN METRES.
2. THIS DRAWING SHOULD NOT BE SCALED.
3. IF IN DOUBT, PLEASE ASK.
4. EL 0.00M CORRESPONDS TO RL 10.00 M WHICH IS FFL OF TG BUILDING
5. FOR TYPICAL NOTES REF. LAYOUT DRG. NO. A011;BHEL DRG.NO. PE-V0-412-164A-A002(SH. 1 OF 1)
6.1 ALL RCC SURFACE COMING IN CONTACT WITH SEA WATER SHALL BE PAINTED IN LINE WITH VOLUME VI OF SPECIFICATION.
6.2 ALL PIPING COMING IN CONTACT WITH SEA WATER SHALL BE INTERNALLY & EXTERNALLY PAINTED AS PER SPECIFICATION.
7. RUNG LADDERS (PU COATED) ARE IN CLEAR WATER SCOPE OF SUPPLY.
IDENTIFICATION OF DRG. / PLAN / SECTION
CIVIL WORK DETAIL
SHEET NO.
17-04/A 0 85- 2 0
PLAN / SECTION NO.
DRG.NO.
DRG. APPROVED BY PURCHASER.
JOB NO.
LEGEND
F.G.L. - FINISH GROUND LEVEL
T.W.L - TOP WATER LEVEL
T.O.W. - TOP OF WALL
REFERENCE DRGS.
2 P & I FOR ETP A012
1 ETP EQUIPMENT LAYOUT A011
SL. NO. DESCRIPTION CLEWAT DRG. NO.
01A REVISED AS PER DISCUSSION WITH BHEL 15.11.2018
01 REVISED AS PER DESIGN COMMENT 29.10.2018
0A RE. SUBMITTED FOR APPROVAL 05.04.2018
00 SUBMITTED FOR APPROVAL 03.03.2018
REV.No. DETAILS REVISIONS DATE
CAUTION
THIS DRG. IS CONFIDENTIAL AND IS THE PROPERTY OF "CLEAR WATER LTD" IT MUST NOT BE DISCLOSED/COPIED OR LENT TO A THIRD PARTY WITHOUT WRITTEN CONSENT OF CLEAR WATER LTD.
QUALITY POLICY
IN ITS QUEST TO SATISFY THE CUSTOMER, CLEAR WATER LTD. PURSUES CONTINUAL IMPROVEMENT IN THE QUALITY OF ITS PRODUCTS, SERVICES AND PERFORMANCE LEADING TO TOTAL CUSTOMER SATISFACTION AND BUSINESS GROWTH THROUGH DEDICATION, COMMITMENT AND TEAM WORK OF ALL EMPLOYEES.
QUALITY OBJECTIVES
• CUSTOMER SATISFACTION BY IMPROVING DELIVERY / COMPLETION PERIOD & RESPONSE.
• QUALITY OF SUPPLIES BY IMPROVING SUB-VENDOR PERFORMANCE.
• CAPABILITY OF HUMAN RESOURCES BY UPGRADING SKILL AND COMPETENCE.
RRB/17-04D(85)/ DT 15.11.2018
PROJECT: 2 x 660 MW ENNORE SEZ STPP (AT ASH DYKE OF NCTPS, CHENNAI)
OWNER: TAMILNADU GENERATION & DISTRIBUTION CORPORATION LIMITED
CONSULTANT: DESEIN PVT. LIMITED CONSULTING ENGINEERS NEW DELHI, HYDERABAD- INDIA
CONSTRUCTION AGENCY: BHARAT HEAVY ELECTRICALS LTD POWER SECTOR POWER ENGINEERING MANAGEMENT NOIDA,UTTAR PRADESH
DESIGNATION: PACKAGE CONTRACTOR :- CLEAR WATER LTD. D-14/1, OKHLA INDUSTRIAL AREA PHASE-II, NEW DELHI-110020 PHONE :-30286000 E-mail :-clearwater@bol.net.in
CLEWAT DRG. NO. 17-04/A085 (SH. 2 OF 2) VER 0A
BHEL DRG.NO. PE-V0-412-164A-A052 (Sh. 2 OF 2) REV. 01
TITLE:- CIVIL INPUT DRGS. OF ETP AREA SUMPS & LAMELLA CLARIFIER MECH. GA OF GUARD POND
SCALE 1:150

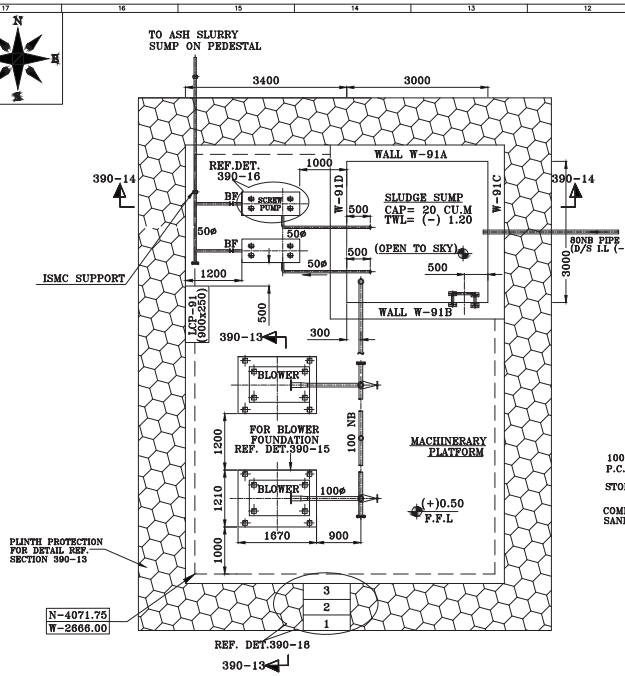

SLUDGE SUMP AND MACHINERY PLATFORM PLAN-390-11
(SCALE-1:50)

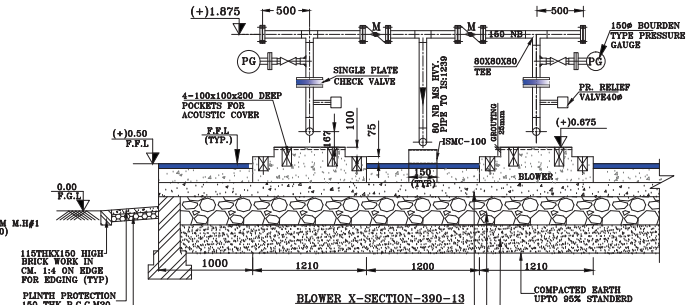

BLOWER X-SECTION-390-13
(SCALE-1:25)

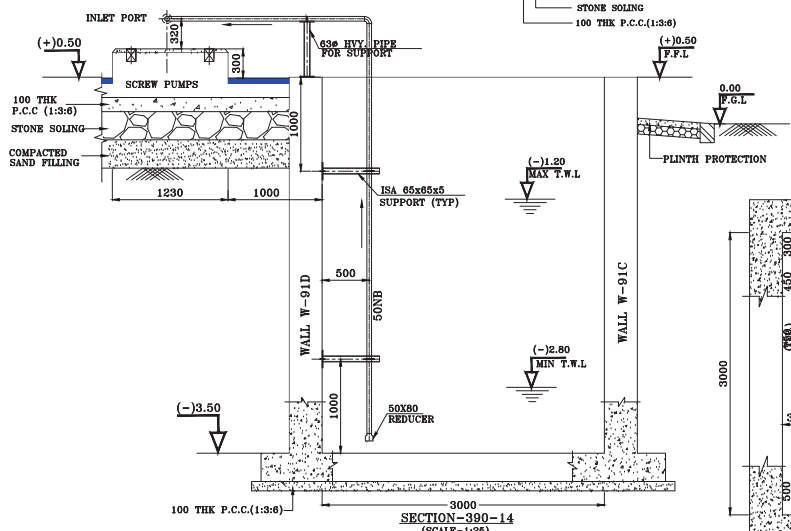

SECTION-390-14
(SCALE-1:25)

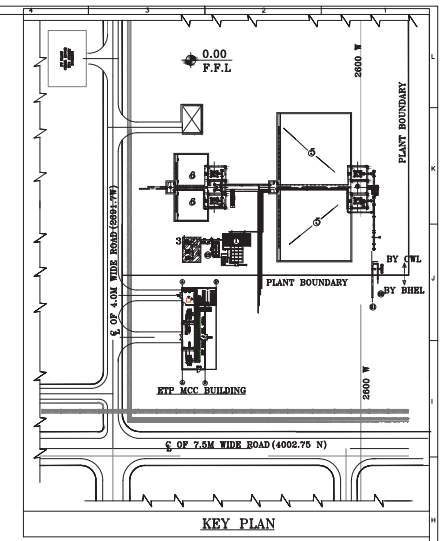

KEY PLAN

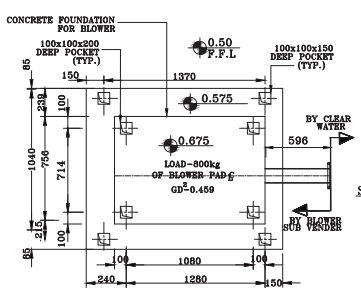

DETAIL-390-15
BLOWER FOUNDATION PLAN
(SLUDGE SUMP BLOWER)
REF.DATA SHEET DOC.NO.DS-01/17-04M(10B)
BHEL DOC.4-WT-025-00000)
(SCALE-1:20)

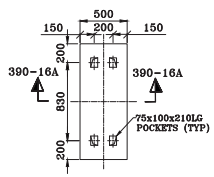

DETAIL-390-16
SCREW PUMP FOUNDATION PLAN
(SLUDGE TRANSFER PUMP)
REF.DATA SHEET DOC.NO.DS-01/17-04M(8B)
(SCALE-1:20)

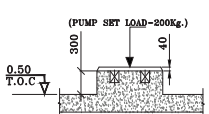

SECTION 390-16A

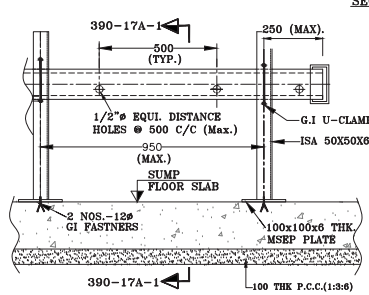

DETAIL 390-17A
(SCALE-1:10)

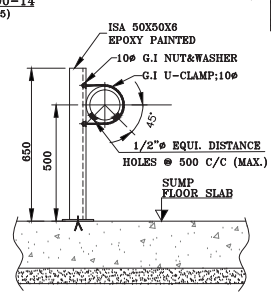

DETAIL 390-17A-1
(SCALE-1:10)

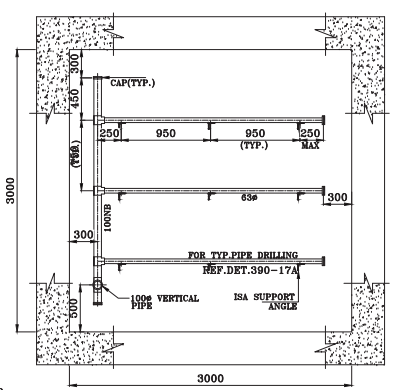

BOTTOM PLAN-390-17
(SCALE-1:25)

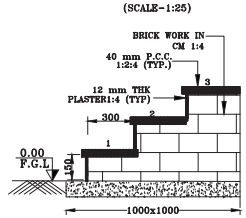

DETAIL-390-18
(SCALE-1:15)

NOTES:-
1. ALL DIMENSIONS ARE IN mm AND ALL LEVELS ARE IN METER.
2. THIS DRG. SHOULD NOT BE SCALED.
3. IF IN DOUBT , PLEASE ASK.
4. EL 0.00M CORRESPONDS TO RL 10.00 M WHICH IS FFL OF TO BUILDING
5. FOR TYPICAL NOTES REFER TO LAYOUT DRG. NO. A01:
6. RUNG LADDERS ARE IN CLEAR WATER SCOPE OF SUPPLY.
5. FOR INSTRUMENTATION PROVISION PLEASE REFFER TO P & ID DRG.

IDENTIFICATION OF DRG. / PLAN / SECTION
17-04/A S 99-1 0
WORK DISCIPLINE
SHEET NO.
PLAN/SECTION NO.
DRG.NO.
DRG. APPROVED BY PUR.
JOB NO.

LEGEND
F.G.L - FINISH GROUND LEVEL
T.W.L - TOP WATER LEVEL

SL. NO.	DESCRIPTION	CWL DRG. NO.	BHEL DRG.NO.
	REFERENCE DRGS.		
1	PE-DG-412-100-M001	---	PE-DG-412-100-M001
01A	RE.SUBMITTED FOR APPROVAL		15-11-2018
01	RE.SUBMITTED FOR APPROVAL		29-10-2018
01	RE.SUBMITTED FOR APPROVAL		27-10-2018
0A	RE.SUBMITTED FOR APPROVAL		05-04-2018
00	SUBMITTED FOR APPROVAL		12-03-2018
	DETAILS REVISIONS		DATE

CAUTION
THIS DRG. IS CONFIDENTIAL AND IS THE PROPERTY OF CLEAR WATER LTD* ITMUST NOT BE DISCLOSED/COPIED OR LENT TO A THIRD PARTY WITHOUT WRITTEN CONSENT OF CLEAR WATER LTD.

CAUTION
THIS DRG. IS CONFIDENTIAL AND IS THE PROPERTY OF CLEAR WATER LTD* ITMUST NOT BE DISCLOSED/COPIED OR LENT TO A THIRD PARTY WITHOUT WRITTEN CONSENT OF CLEAR WATER LTD.

QUALITY POLICY
IN ITS QUEST TO SATISFY THE CUSTOMER, CLEAR WATER LTD. PURSUES CONTINUAL IMPROVEMENT IN THE QUALITY OF ITS PRODUCTS, SERVICES AND PERFORMANCE LEADING TO TOTAL CUSTOMER SATISFACTION AND BUILDING TRUST THROUGH DEDICATION, COMMITMENT AND TEAM WORK OF ALL EMPLOYEES.

QUALITY OBJECTIVES
1.CUSTOMER SATISFACTION BY IMPROVING DELIVERY / COMPLETION PERIOD & RESPONSE.
2.QUALITY OF SUPPLIES BY IMPROVING SUB-VENDOR PERFORMANCE.

RRB/17-04D(9)/ DT 15.11.2018

PROJECT: 2 x 660 MW ENNORE SEZ STPP (AT ASH DYKE OF NCTPS, CHENNAI)
OWNER: TAMILNADU GENERATION & DISTRIBUTION CORPORATION LIMITED
CONSULTANT: DESIEN PVT. LIMITED, CONSULTING ENGINEERS, NEW DELHI, HYDERABAD - INDIA
CONSTRUCTION MANAGER: BHARAT HEAVY ELECTRICALS LTD, POWER SECTOR, PROJECT ENGINEERING MANAGEMENT, NOIDA,INDIA
PACKAGE CONTRACTOR: CLEAR WATER LTD., B-14/1, OKHLA INDUSTRIAL AREA, PHASE-II, NEW DELHI-110020, PHONE :- 26386095, E-mail :-clearwater@vsnl.net.in
CLEAWAT DRG. NO. 17-04/A200 (SH. 1 OF 1) | VER 0A
BHEL DRG.NO. | REV. 01
SCALE 1:50
TITLE:- CIVIL INPUT DRGS.OF ETP AREA SUMPS & LAMELLA CLARIFIER
MECH. GA OF SLUDGE SUMP

TAMIL NADU GENERATION AND DISTRIBUTION CORPORATION LIMITED

From
Er.P.Shanmuganathan,B.E.
Superintending Engineer/Elect.,
Thermal & Hydro Projects,
V Floor, Western Wing,
144, Anna Salai, Chennai-600 002.
Cell No : 9445857544
Email ID: sethhyp@tnebnet.org

To
Shri Madan Lal, DGM,BHEL/PS-PMG,
Tower-A,4th floor, Advant Navis Business Park,
Plot No:7, Sector-142, Expressway Noida,
Gautam Buddh Nagar(UP) - 201305
Direct:0120- 6748021
Mobile :+919425080823
Email : mlal@bhel.in

Lr.No.:SE/E/Th&HyP/EE-7/M/AEE/M/F.En SEZ STPP/D.747/18 dt.26 .12.2018.

Dear Sirs,

Sub: TANGEDCO - 2x660 MW Ennore SEZ STPP – EPC Contract to M/s. BHEL – CPU, ETP & STP Drawings – noted as information – Reg.

Ref: 1. Lr.No: CE/P/SE/M/EE-10/E/P/F.2x660MWEn.SEZ.STPP/D.60/2014 dt.27.09.2014.
2. MOM dt. 19.12.'18 and 20.12.'18 held at BHEL /PSSR office.

******

With reference to MOM under reference (2) above, the following drawings on CPU, ETP & STP are approved under information category.

Category I - Approved. Category II - Approved with comments. Proceed with Fabrication considering our comments & Resubmit for approval. Category III - Not approved. See comments and resubmission required. Category IV - For information. M/s BHEL to note that any changes and modifications in the approved CAT-IV drawings/documents to be informed to TANGEDCO and update the drawings accordingly.

S.No	Drawing No.	Rev	Description	Remarks
1.	PE-V0-412-155-A019	2	DATASHEET OF RESIN TRAP, CARBON TRAP, ACF, AGITATOR FOR CONDENSATE POLISHING UNIT	CAT : IV
2.	PE-V0-412-155-A022	1	TECHNICAL DATA SHEET FOR LOW PRESSURE VALVES FOR CONDENSATE POLISHING UNIT	CAT : IV
3.	PE-V0-412-155-A037	1	PIPING LAYOUT (SERVICE VESSEL AREA) FOR CONDENSATE POLISHING UNIT	CAT : IV
4.	PE-V0-412-164A-A002	1	LAYOUT OF EFFLUENT TREATMENT PLANT	CAT : IV
5.	PE-V0-412-164A-A029	1	CIVIL INPUT DRAWINGS OF ETP AREA SUMPS AND LAMELLA CLARIFIER	CAT : IV
6.	PE-V0-412-553-A007	1	QAP OF PUMPS FOR AIR CONDITIONING SYSTEM	CAT : IV
7.	PE-V0-412-553-A020	1	TDS & GA of condenser & chilled water pumps along with foundation details for AC system	CAT : IV
8.	PE-V0-412-553-A033	1	TDS OF PIPE FOR AC SYSTEM	CAT : IV
9.	PE-V0-412-673-A023	1	Painting Schedule FOR STP	CAT : IV
10.	PE-V0-412-673-A034	1	MECH. GA OF LAMELLA TUBE SETTLER CLARIFIER FOR SEWAGE TREATMENT PLANT	CAT : IV
11.	PE-V0-412-673-A040	1	GA DRAWING OF HYPO DOSING TANKS	CAT : IV

Yours faithfully,
-sd-/dt.26.12.2018

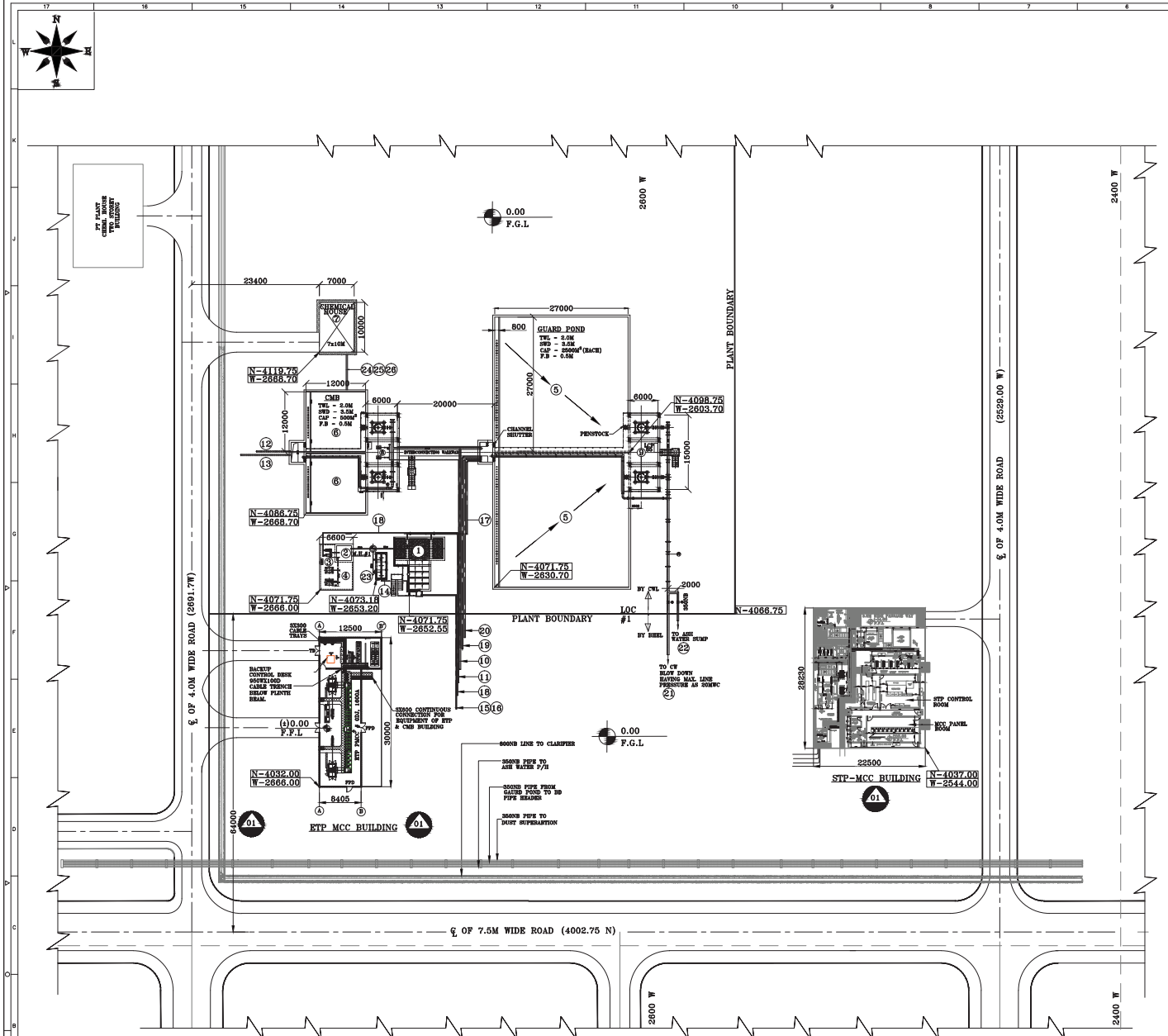

SL.NO.	DESCRIPTION	CAPACITY	QTY.	MOC.	REMARK
1	LAMELLA CLARIFIER	125 Cu.M/Hr	1	R.C.C	FLOCC. ZONE (4 x 5.8M); CLARIFIER (4.0 x 9.8)
2	SLUDGE SUMP	20 Cu. M	1	R.C.C	3X3X3.3M+1.0 FB
3	SLUDGE TRANSFER PUMPS	10 Cu.M/Hr	1W+1SB	--	SCREW PUMPS
4	AIR BLOWER FOR SLUDGE SUMP	4500 LPM	1W+1SB	--	ROOTS BLOWER
5	GUARD POND(COMP. 1 & 2)	2500 Cu.M	2	R.C.C	27 x 27 x 3.5M SWD+0.5M F.B
6	CENTRAL MONITORING BASIN (COMPARTMENT 1 AND 2)	500 Cu.M	2	R.C.C	12 x 12 x 3.5M SWD+0.5M F.B
7	CHEMICAL HOUSE	-	1	R.C.C	7 x 10M;
8	CMB TRANSFER PUMP	1000 Cu.M/Hr	1W+1SB	--	--
9	GUARD POND TRANSFER PUMP	1200 Cu.M/Hr	1W+1SB	--	--
10	TO CHP DUST SUPPRESSION SYST.	500-Cu.M/Hr	--	MS-PU	350ø PIPE UP TO BATTERY LIMIT BY CLEAWAT; FLOWAPPROX.
11	TO HORTICULTURE	10-Cu.M/Hr	--	HDPE	100NB PIPE; 350RMT TOTAL LENGTH
12	RO REJECT-STAGE I FEED PIPE	1100 Cu.M/Hr	--	---	80NB TO CMB BY DM PLANT VENDOR
13	DMP-CPU N-PIT(CPU & DM WASTE)	80 Cu.M/Hr	--	---	150NB TO CMB BY CPU VENDOR;INTER.
14	FROM TPI (OIL WATER SEPARATOR)	40 Cu.M/Hr	--	MS	100NB TO LAMELLA SUMP
15	FROM PRE SETTLING OVER FLOW(UNIT-1)	15 Cu.M/Hr	--	MS	65 NB TO LAMELLA CLARIFIER
16	FROM PRE SETTLING OVER FLOW(UNIT-2)	15 Cu.M/Hr	-	MS	65 NB TO LAMELLA CLARIFIER
17	LAMELLA CLARIFIER OUT PUT FLOW	125 Cu.M/Hr	--	MS	200 NB TO GUARD POND INLET
18	ETP SLUDGE SUMP FLOW	10 Cu.M/Hr	--	MS	63 NB TO ASH SLURRY SUMP
19	RO REJECT STAGE -I	--Cu.M/Hr	---	---	300NB TO GUARD POND BY DMVENDOR
20	FROM SLUDGE SUMP IN PT AREA	---Cu.M/Hr	----	----	300NB TO GUARD POND BY PT VENDOR
21	TO CW BLOW DOWN HEADER	AS REQD.	---	MS-PU	450NB UPTO LOC#1 ; BY CLEAWAT
22	TO ASH WATER SUMP	AS REQD.	----	MS-PU	350NB UPTO LOC#1; BY CLEAWAT
23	TPI	40 Cu.M/Hr	1	MS-EP	2.35 M X 5.5 M ; FLOW FROM FUEL OIL SEPARATOR/ POWER HOUSE OLY WASTE UNIT 1& 2
24	CHEMICAL PIPE LINES TO CMB	----	----	----	PIPE LINE LAID OVER RCC PEDESTAL
25	CHEMICAL PIPE LINES TO GAURD POND	----	----	----	-do-
26	CHEMICAL PIPE LINE TO LAMELLA CLARIFIER	----	----	----	-do-
27	CABLE ROUTING	----	----	----	LAID OVER PEDESTAL; CLAMPED TO WALLS

APPROVED VIDE Lr.No.:SE/E/Th&HyP/EE-7/M/ AEE/M/F.En SEZ STPP/D.747/18 dt.26 .12.2018.

BHARAT HEAVY ELECTRICALS LTD PROJECT ENGINEERING MANAGEMENT.

This approval status shall be interpreted as laid down in the contract and it shall not relieve the contractor from the contractual obligation.

APPROVAL CATEGORY AWARDED = I

CAT I - Approved
CAT II - Approved With Comments as Noted
CAT III - Not Approved
CAT IV - Reference Drawing

DEPARTMENT: MECHANICAL AUXILIARY
NAME: FALGUNI SAHA

FALGUNI SAHA 2020.02.05 13:51:50 +05'30'

NOTES:-

1. ALL DIMENSIONS ARE IN mm AND ALL LEVELS ARE IN METER.
2. THIS DRG. SHOULD NOT BE SCALED.
3. IF IN DOUBT , PLEASE ASK.
4. LOCATION OF FIELD SUMP HAVE BEEN INDICATED UNDER DRG.NO. 17-04/A011(SH. 2 OF 2)
5. EL 0.00M CORRESPONDS TO EL 10.00 M WHICH IS FFL OF TG BUILDING
5. FOR PIPE ROUTING DETAILS REFER DRG.NO 17-04/A015

IDENTIFICATION OF DRG. / PLAN / SECTION
WORK DICIPLINE
SHEET NO.
17-04/A 011-1
PLAN/SECTION NO.
DRG.NO.
DRG. APPROVED BY PUR.
JOB NO.

LEGEND
F.G.L - FINISH GROUND LEVEL
T.W.L - TOP WATER LEVEL

SL. NO.	DESCRIPTION	CWL DRG. NO.	BHEL DRG.NO.
1	LAY OUT OF ETP (OFF SITE SUMPS)		PE-V0-412-164A-A002(SHS OF 2)
1	PLOT PLAN	---	PE-DC-412-190-M001
	REFERENCE DRGS.		

	REVISIONS	DATE
01A	REVISED AS PER DISCUSSION WITH BHEL	15-11-2018
01	REVISED AS PER DESIGN COMMENT.	16-10-2018
	REVISED AS PER BHEL COMMENT DT.28.06.18	29-08-2018
	RE.SUBMITED FOR APPROVAL	05-04-2018
00	SUBMITED FOR APPROVAL	03-03-2018
	DETAILS REVISIONS	DATE

CAUTION

THIS DRG. IS CONFIDENTIAL AND IS THE PROPERTY OF "CLEAR WATER LTD" IT/MUST NOT BE DISCLOSED/COPIED OR LENT TO A THIRD PARTY WITHOUT WRITTEN CONSENT OF CLEAR WATER LTD.

QUALITY POLICY

IN ITS QUEST TO SATISFY THE CUSTOMER, CLEAR WATER LTD, PURSUES AT ITS CORE A PROVIDENT MIX OF QUALITY OF ITS PRODUCTS, SERVICES, CONTINUOUS IMPROVEMENT TO ACHIEVE TOTAL CUSTOMER SATISFACTION AND BUSINESS GROWTH THROUGH DEDICATION, COMMITMENT AND TEAM WORK OF ALL EMPLOYEES.

QUALITY OBJECTIVES

- CUSTOMER SATISFACTION BY IMPROVING DELIVERY/ COMPLETION PERIOD & RESPONSE.
- QUALITY OF SUPPLIES BY IMPROVING SUB-VENDOR PERFORMANCE.

RRB/17-04D(11)/ DT .16.11.2018

PROJECT	2 x 660 MW ENNORE SEZ STPP (AT ASH DYKE OF NCTPS, CHENNAI)
OWNER	TAMILNADU GENERATION & DISTRIBUTION CORPORATION LIMITED
CONSULTANT	DESEIN PVT. LIMITED CONSULTING ENGINEERS NEW DELHI, HYDERABAD- INDIA
CONTRACTOR	BHARAT HEAVY ELECTRICALS LTD POWER SECTOR PROJECT ENGINEERING MANAGEMENT NOIDA,NCR DELHI
CONTRACTOR	PACKAGE CONTRACTOR :- CLEAR WATER LTD. B-14/1, OKHLA INDUSTRIAL AREA PHASE-II, NEW DELHI-110020 PHONE :-26380005 E-mail :-clearwater@bol.net.in
CLEAWAT DRG. NO.	17-04/A011 (SH. 1 OF 1)
BHEL DRG.NO.	PE-V0-412-164A-A002 (SH. 1 OF 1)
VER	0A
REV.	01
TITLE:-	LAYOUT OF 1200 Cu.M/HR EFFLUENT TREATMENT PLANT
SCALE	1:400

TAMIL NADU GENERATION AND DISTRIBUTION CORPORATION LIMITED

From
Er.K.Subash Chandra Bose.,M.E.,
Chief Engineer/Projects I,
V Floor, Western Wing,
144, Anna Salai,
Chennai-600 002.
Fax No : 044- 28520878
Cell No: 9445857543
Email ID: cepr@tnebnet.org

To
Er.Anil Kumar Pal,Sr Mnager –PG II,
M/s. Bharat Heavy Electrical Limited,
Project Engineering Management
PPEI Building, HRDI & ESI Complex,
Plot No.25, Sector-16A, Noida-201301(U.P)
Fax : 0120-423522
E mail : anujkumar@bhelpem.co.in,
jd@bhel.in,deveshverma@bhel.in,
pmgss@bhel.in, rajivb@bhel.in

Lr.No.CE/P/SE/E/ P- I/AEE/M/F. Ennore SEZ Vendor Appl/D. 298 /19,dt 08 .08.19

Sir, Lr.No.CE/P/SE/E/P-I/AEE/M/F, Ennore SEZ Vendor Appl/D.298/19, dt 08.08.19

Sub: TANGEDCO - Setting up of 2x660 MW Ennore SEZ Coal based super critical thermal power project at ash dyke of North Chennai Thermal Power Station (Kattupalli) – EPC cum Debt Finance Contract awarded to M/s.BHEL on 27.09.2014 - Sub Vendor Items approval sought by BHEL/PEM for "EFFLUENT TREATMENT PLANT" -Approval accorded –Reg.

Ref:
1) Lr.No. CE/P/SE/M/P/EE-10/E/P/F.2x660 MW Ennore SEZ STPP / D.60/14,dt.27.09.2014.
2) Your letter Ref: MS-1-13-E-0005 dated 27.09.2014.
3) Lr.No.CE/P/SE/E/T&H(P)/EE-6/E/P/F. 2X660 Ennore SEZ STPP/D. 115 /14,dt 19.12.14.
4) BHEL/PEM Lr.No PEM-412-ENNORE-23/17 dated 25.05.2017 (Hard copy received on 29.05.17).
5) Lr.No.CE/P/SE/E/T&H(P)/EE-6/E/P/AEE/M/F. 2X660 Ennore SEZ STPP/D. 186 /17,dt 13.06.17.
6) Lr.No.CE/P/SE/E/T&H(P)/EE-6/E/P/F. Ennore SEZ Vendor Appl/ D. 226 /17,dt 03.07.17
7) BHEL/PEM Ref:PE-X-22/412/8VA/ETP1 dated 15.07.17. (Hard copy received on 20.07.17)
8) Lr.No.CE/P/SE/E/T&H(P)/EE-6/E/P/F. Ennore SEZ Vendor Appl/ D. 265 /17,dt 07.08.17
9) BHEL email dated 14.08.2017
10) Lr.No.CE/P/SE/E/T&H(P)/EE-6/E/P/F. Ennore SEZ Vendor Appl/ D. 287 /17,dt 26.08.17
11) BHEL/PEM Ref:BHEL/EPC/ETPS/19-20/JULY/03 dt 09.07.19 (received on 12.07.19)

****

Please refer to the letters cited above.

The final order was placed on the vendor M/s Clear Water Limited., for the EFFLUENT TREATMENT PLANT for 2X660 MW Ennore SEZ STPP. In Continuation to the subvendor approval accorded vide Ref (10), the sub vendor items are approved as per the annexure for EFFLUENT TREATMENT PLANT requested against the list of vendors submitted vide Ref (11) by M/s BHEL /PEM.

Encl: As above (11 Pages)

Yours faithfully,

CHIEF ENGINEER /PROJECTS I

Copy to the CE/Civil/Ennore Sez/Chennai -120. (by email)
Copy to the SE/Civil/Ennore Sez/Chennai -120(by email)
Copy to the SE/Electrical/Ennore Sez/Chennai -120(by email)
Copy to M/S.Desein Pvt Ltd, New Delhi. (by email)

2X660MW ENNORE SEZ STPP		
This is Annexure to vendor Items approval to M/s Clear water Limited for Effluent Treatment Plant		
Lr.No CE/P I /SE/E/ P -I/ AEE/M/ F. 2X660MW Ennore SEZ Vendor appl /D 298 / 19 dated 08 .08.2019		
BHEL: PEM : Ref dated 09.07.2019 (Handed over on 12.07.19) for ETP Package		
S. No/ Name of Equipment	Sub-Vendor name	TANGEDCO approval for Ennore SEZ STPP
1. L.T. Motors	ABB	Approved
	Crompton	Approved
	Bharat Bizlee	Approved
	Kirloskar	Approved
2. Reduction Gear		
a) Worm	Premium (Greaves)	Approved
b) Helical Gear Head	Premium	Approved
c) Bevel / Sprocket	Clear Water	Approved
d) Proprietary Drive Head	Clear Water	Approved
3.1 Valves / Penstocks		
a) C.I. Sluice/Non Return valves	Venus	Approved
	H.Sarkar	Approved
	AV Valves	Approved
b) Butterfly Valve	AV Valves	Approved
	Venus	Approved
	R & D Multiple	Approved
	Cair	Approved
c) Diaphragm Valve (C.I)	Cair	Approved
	Crane	Approved
	Floway	Approved
	IME	Not approved .
	Avcon	Not approved .
d) Solenoid Diaphragm Valve	Cair	Approved
	AVCON	Not approved .
	Procon	Approved
e) Diaphragm Valve (P.P)	Cair	Approved
	Orient	Approved
	Joly	Approved
	Parth	Approved
f) Bronze/GM Valves	Sant.	Not approved .

BHARAT HEAVY ELECTRICALS LTD
PROJECT ENGINEERING MANAGEMENT.
This approval status shall be interpreted as laid down in the contract and it shall not relieve the contractor from the responsibilities and obligations.
APPROVAL CATEGORY AWARDED >>
CAT I - Approved
CAT II - Approved With Comments as Noted
CAT III - Not Approved
CAT IV - Drawing Pending
DEPARTMENT : MECHANICAL AUXILIARY
NAME :
PRESENT STATUS :

FALGUNI SAHA
2020.02.05 13:54:59 +05'30'

2X660MW ENNORE SEZ STPP		
This is Annexure to vendor Items approval to M/s Clear water Limited for Effluent Treatment Plant		
Lr.No CE/P I /SE/E/ P -I/ AEE/M/ F. 2X660MW Ennore SEZ Vendor appl /D 298 / 19 dated 08 .08.2019		
BHEL: PEM : Ref dated 09.07.2019 (Handed over on 12.07.19) for ETP Package		
S. No/ Name of Equipment	Sub-Vendor name	TANGEDCO approval for Ennore SEZ STPP
g) S.S. Valve	Crescent	Approved
	Hitech	Approved
	Niton	Approved
	Sakhi	Not approved .
	AK Sons	Not approved .
h) Forged Steel Valves (CS) upto 50 NB Size	Fouress	Approved
	KSB	Approved
	Audco	Approved
	Leader	Approved
	AV Valves	Approved
i) Cast Steel Valves	KSB	Approved
	Fouress	Approved
	Leader	Approved
	Audco	Approved
	KBL	Approved
	BDK	Approved
	Venus	Approved
	AVV	Approved
j) Sluice Gate / Penstock	Mecha Tech	Not approved .
	Oriental	Not approved .
	Durga	Approved
	Venus	Approved
k) Plug Valves (Manual)	AV Valves	Approved
	Cair Euromatic Automation	Approved
	Audco	Approved
	Parth	Approved
3.2 Electric Actuator	Marsh	Not approved .
	Auma	Approved
	Rotark	Approved
4. **Pipes**		
a) G.I. / M.S. Pipes (upto 450 dia)	Jindal	Approved

2X660MW ENNORE SEZ STPP		
This is Annexure to vendor Items approval to M/s Clear water Limited for Effluent Treatment Plant		
Lr.No CE/P I /SE/E/ P -I/ AEE/M/ F. 2X660MW Ennore SEZ Vendor appl /D.298 / 19 dated 08 .08.2019		
BHEL: PEM : Ref dated 09.07.2019 (Handed over on 12.07.19) for ETP Package		
S. No/ Name of Equipment	Sub-Vendor name	TANGEDCO approval for Ennore SEZ STPP
	Surya Roshni	Approved
	Indian Tube	Approved
	BHEL approved	Not approved . Vendor list shall be furnished.
b) M.S.Pipes (450 & above)	'Cleawat' Fabricated as per IS 3589	Approved
c) C.I. Pipes & Specials	As per I.S. Codes	Vendor list shall be furnished.
d) PVC Pipes & Specials	Prakash	Approved
	Uniplas	Approved
	Ori-Plast	Approved
	IS marked	Vendor list shall be furnished.
e) HDPE Pipes & Specials	PIL	Approved
	Phoel	Approved
	Hasti	Not approved .
	Ori-Plast	Not approved .
	IS marked	Vendor list shall be furnished.
f) SS Pipes	Jindal	Approved
	Remi	Approved
	Choksi	Not approved .
	Apex	Not approved .
h) CPVC Pipes	Astral	Approved
	Phoel	Approved
	IS marked	Vendor list shall be furnished.
5. **Pumps (if any)**		
a) Horizontal Pumps	Sintech	Approved
	Flowmore	Approved
	Kishore	Approved
b) Vertical Pumps (Water)	Sintech	Approved
	Kishore	Approved
	Flowmore	Approved
c) Vertical Pumps (Sludge)	Sintech	Approved

2X660MW ENNORE SEZ STPP		
This is Annexure to vendor Items approval to M/s Clear water Limited for Effluent Treatment Plant		
Lr.No CE/P I /SE/E/ P -I/ AEE/M/ F. 2X660MW Ennore SEZ Vendor appl /D 298/ 19 dated 08 .08.2019		
BHEL: PEM : Ref dated 09.07.2019 (Handed over on 12.07.19) for ETP Package		
S. No/ Name of Equipment	Sub-Vendor name	TANGEDCO approval for Ennore SEZ STPP
	Kishore	Approved
	Flowmore	Approved
d) Screw Pump	UT Pump	Approved
	Positive	Approved
	ROTO	Approved
e) Metering Pump	Milton Roy	Approved
	Positive	Approved
6. **Centrifuge**	Hiller	Approved
7. **Proprietary Items (if any)**		
a) Flash Mixer/ Propeller / Flocculator	Clear Water	Approved
b) Clarifier-Scraper Bridge Structure with accessories (Current Collector/Flocculator Paddle/Propeller/Periphery Drive /Flocculator DriveHead/ Central Bearing Housing); Turn Buckle Assly; Misc Fab. Items	Clear Water	Approved
c) TPI/Lamella Clarifier	Clear Water	Approved
d) Thickener-Scraper Bridge Structure with accessories	Clear Water	Approved
e) C.I. R/L Wheels	Clear Water	Approved
f) Constant Bleed Assly.	Clear Water	Approved
g) M.S. Tank (atmospheric/Pressure)	Clear Water	Approved
h) Chemical Tank Agitators/Strainer Plate	Clear Water	Approved
i) Channel Shutter	Clear Water	Approved
j) Head Stock / Operating Shaft / Hand Wheels/Step Ladder/ Cage Ladder	Clear Water	Approved
k) Bevel gear/sprockets	Clear Water	Approved
l) Eye wash Fountain	Clear Water	Approved
m) Drive Heads (if any)	Clear Water	Approved

2X660MW ENNORE SEZ STPP		
This is Annexure to vendor Items approval to M/s Clear water Limited for Effluent Treatment Plant		
Lr.No CE/P I /SE/E/ P -I/ AEE/M/ F. 2X660MW Ennore SEZ Vendor appl /D 298/ 19 dated 08.08.2019		
BHEL: PEM : Ref dated 09.07.2019 (Handed over on 12.07.19) for ETP Package		
S. No/ Name of Equipment	Sub-Vendor name	TANGEDCO approval for Ennore SEZ STPP
n) Sprocket Pinion	Clear Water	Approved
8. **MISC. ITEMS (if any)**		
i) Roller Chain	Xilin	Approved
	Diamond	Approved
	TIDC	Approved
ii) Link Chain	LYCA	Approved
iii) Bearing	ARB	Approved
	ZKL	Approved
	Romania	Approved
iv) Coupling (Tyre)	Unique	Approved
v) R/L Work	Rishi Industries	Approved
	Engindia Rubber	Approved
	Murthal Tanks	Approved
vi) Hoist & Chain Pulley Block	Indef	Approved
	Reva	Approved
	Brady	Approved
	Delta	Approved
	Herculies	Approved
	Powerlift	Approved
	PMC	Approved
vii) Weighing Machine	Avcon	Approved
	Aman	Approved
	Amar	Approved
	CAS	Approved
viii) Load Indicator(Crane Weighing Scale)	Birdman Chemeng (Yota)	Approved
	Aman	Approved
9. Blowers	Beta (Noida)	Approved
	Everest	Approved
10. **Electrical**		
10.1 Local Control Panel /JB/LPBS	Contronics	Not approved .
	RYBSwitchgear	Approved
	Trident	Not approved .
	MileStone	Approved

2X660MW ENNORE SEZ STPP		
This is Annexure to vendor Items approval to M/s Clear water Limited for Effluent Treatment Plant		
Lr.No CE/P I /SE/E/ P -I/ AEE/M/ F. 2X660MW Ennore SEZ Vendor appl /D 298 / 19 dated 08 .08.2019		
BHEL: PEM : Ref dated 09.07.2019 (Handed over on 12.07.19) for ETP Package		
S. No/ Name of Equipment	Sub-Vendor name	TANGEDCO approval for Ennore SEZ STPP
	Vidhyut Control	Approved
	Schneider Electronic	Approved
	Control & Switchgear	Approved
	Elemech	Approved
	Jasper	Approved
	Electronic	Approved
	Swati	Not approved .
	Basic Automation	Not approved .
	IKPA	Not approved .
10.2 **Panel Components (as applicable)**		
a) Motor Starters	BCH	Approved
	L&T	Approved
	Siemens	Approved
	NGEF	Approved
	KEC	Approved
b) Rotary Switch	LT	Approved
	Siemens	Approved
	G.E. Power	Approved
	Schneider	Approved
	CSC	Approved
c) HRC Fuse	EE	Approved
	LT	Approved
	Siemens	Approved
	G.E.Power	Approved
	CGL	Approved
	Schneider	Approved
	CSC	Approved
d) MCB	L&T	Approved
	MDS	Approved
	Datar	Approved
	Havells	Approved
	Indo-Siemens	Approved
	GE	Approved
	Schneider Electric	Approved
	CSE	Approved

2X660MW ENNORE SEZ STPP		
This is Annexure to vendor Items approval to M/s Clear water Limited for Effluent Treatment Plant		
Lr.No CE/P I /SE/E/ P -I/ AEE/M/ F. 2X660MW Ennore SEZ Vendor appl /D298 / 19 dated 08 .08.2019		
BHEL: PEM : Ref dated 09.07.2019 (Handed over on 12.07.19) for ETP Package		
S. No/ Name of Equipment	Sub-Vendor name	TANGEDCO approval for Ennore SEZ STPP
e) Contactor	LT	Approved
	Siemens	Approved
	BCH	Approved
	G.E. Power	Approved
f) Aux. relay contacts	LT	Approved
	Siemens	Approved
	BCH	Approved
	G.E. Power	Approved
g) Protective relay	EEL	Approved
	UEL	Approved
	Jyoti	Approved
	Asea	Approved
	MEI	Approved
h) Single Phase Preventors	LT	Approved
	Minillic	Approved
i) Push Button	LT	Approved
	BCH	Approved
	CONCORD	Approved
	G.E POWER	Approved
j) Ammeter / Voltmeter	AE	Approved
	IMP	Approved
	Kappal	Approved
	Havell	Approved
	Goliya	Approved
	IML	Approved
	MEL	Approved
	VEL	Approved
	Rishab	Approved
k) Selector Switch	L&T	Approved
	EE	Approved
	Kaycee	Approved
l) Indicating Lamps	G.E.POWER	Approved
	BCH	Approved
	CONCORD	Approved
	L&T	Approved
	Vashinw	Approved
m) Tiny Switches	Anchor	Approved

2X660MW ENNORE SEZ STPP		
This is Annexure to vendor Items approval to M/s Clear water Limited for Effluent Treatment Plant		
Lr.No CE/P I /SE/E/ P -I/ AEE/M/ F. 2X660MW Ennore SEZ Vendor appl /D.298 / 19 dated 08.08.2019		
BHEL: PEM : Ref dated 09.07.2019 (Handed over on 12.07.19) for ETP Package		
S. No/ Name of Equipment	Sub-Vendor name	TANGEDCO approval for Ennore SEZ STPP
	Record	Approved
n) Alarm Annunciators	Procon	Approved
	Pecon	Approved
	IIC	Approved
	INDIGICONT	Approved
o) Timers	LT	Approved
	Concord	Approved
	BCH	Approved
p) Terminal Block	Elmex	Approved
	Techno Plast	Approved
	Tosha	Approved
	Phoenix	Approved
q) Cables lugs	Dowells	Approved
	Comment	Approved
r) Cable Glands	Control Switch Gear	Approved
	Electromac	Approved
	Comment	Approved
	Balija	Approved
s) Door Switch	Kaycee	Approved
	Easen	Approved
t) Power Capacitor	Yesha	Approved
	Volta	Approved
	Univeral	Approved
	Madhav	Approved
	CGL	Approved
u) Digital Indicators	AE	Approved
	MASDUS	Approved
10.3 PLC Panels	ABB	Approved
	GE	Approved
	Schneider	Approved
11. **Instruments**	-	
11.1 Open Channel Flow Meter	SBEM	Approved
	ANI	Approved
11.2 Rotametèr	Flow Star	Approved
	Levcon	Approved
	Eureka	Approved

2X660MW ENNORE SEZ STPP		
This is Annexure to vendor Items approval to M/s Clear water Limited for Effluent Treatment Plant		
Lr.No CE/P I /SE/E/ P -I/ AEE/M/ F. 2X660MW Ennore SEZ Vendor appl /D 298 / 19 dated 08.08.2019		
BHEL: PEM : Ref dated 09.07.2019 (Handed over on 12.07.19) for ETP Package		
S. No/ Name of Equipment	Sub-Vendor name	TANGEDCO approval for Ennore SEZ STPP
	BHEL appd. Make.	Not approved .
11.3 Pressure Gauge	Fibeg	Approved
	H. Guru	Approved
	ANI	Approved
	Precision	Approved
	Millennium	Not approved .
	GIC	Approved
	WIKA	Approved
	WAREE	Approved
	GLUCK	Approved
11.4 Differential Pressure Gauge	H. Guru	Approved
	Switzer	Approved
	ANI	Approved
11.5 Level Gauge	FlowStar	Not approved .
	Levcon	Approved
	Sigma	Approved
	Beacon	Not approved .
	SBEM	Approved
	Electromech	Not approved .
	Chemtrols	Approved
	WAREE	Approved
	V. Automat	Approved
	DK Instruments	Approved
	Jayati	Not approved
	Magnatrol	Approved
	Bliss Anand Instrument	Approved
	Technomatic	Not approved .
11.6 Level controllers / Level Switch (Conductivity Type)	Flow Star	Not approved .
	Level-Tech	Not approved .
	V- Automat	Approved
	Pyrotron	Not approved .
	SBEM	Approved
	Levcon	Approved
	Bliss Anand Control	Approved
	BHEL approved vendor	Not approved .

2X660MW ENNORE SEZ STPP		
This is Annexure to vendor Items approval to M/s Clear water Limited for Effluent Treatment Plant		
Lr.No CE/P I /SE/E/ P -I/ AEE/M/ F. 2X660MW Ennore SEZ Vendor appl /D 298/ 19 dated 08 .08.2019		
BHEL: PEM : Ref dated 09.07.2019 (Handed over on 12.07.19) for ETP Package		
S. No/ Name of Equipment	Sub-Vendor name	TANGEDCO approval for Ennore SEZ STPP
11.7 Level Indicator (Float type)	Clear Water	Not approved .
	Flowstar	Not approved .
11.8 Ultrasonic Level Transmitter	Flowstar	Not approved .
	RLTInstruments	Approved
	IPS	Not approved .
	Automation	Approved
	Emerson	Approved
	Siemons	Approved
11.9 Pressure Switch	Flowstar	Not approved .
	Indfoss	Approved
	Switzer	Approved
	SOAINC	Not approved .
	Dresser	Approved
	V-Automat	Approved
11.10 Ultrasonic Pressure Transmitter	RLT Instruments	Approved
	IPS Automation	Not approved .
	Emerson	Approved
	Siemons	Approved
11.11 Chlorine Analyzer	Pyrotron	Not approved .
	HNL System	Not approved .
	Hach	Approved
	Industrial Devices	Not approved .
	Perfect	Not approved .
11.12 pH Analyzer	Hach	Approved
	Pyrotron	Not approved .
	Ion Exchange	Not approved .
11.13 Turbidity Analyzer	Hach	Approved
	Ion Exchange	Not approved .
11.14 Conductivity Meter	Pyrotron	Not approved .
	Levcon	Not approved .
	Flow Star	Not approved .

2X660MW ENNORE SEZ STPP		
This is Annexure to vendor Items approval to M/s Clear water Limited for Effluent Treatment Plant		
Lr.No CE/P I /SE/E/ P -I/ AEE/M/ F. 2X660MW Ennore SEZ Vendor appl /D 298/ 19 dated 05 .08.2019		
BHEL: PEM : Ref dated 09.07.2019 (Handed over on 12.07.19) for ETP Package		
S. No/ Name of Equipment	Sub-Vendor name	TANGEDCO approval for Ennore SEZ STPP
Note : Additional Sub vendor for the above items or Sub Vendor of any additional item not appearing in above list shall be chosen either from BHEL Sub Vendor list or Credential shall be submitted to BHEL for approval during further progress/execution of project.		TANGEDCO approval shall be taken for any additional vendors.
General: (ii) Forbes marshall, ABB, Honeywell automation, Yokogowa India ltd were already approved to BHEL for PH & Conductivity meters. (iii) ABB /Hach already approved to BHEL for Chloride analyser.		
CHIEF ENGINEER/PROJECTS I		

TAMIL NADU GENERATION AND DISTRIBUTION CORPORATION LIMITED

From
Er.P.S.SHANMUGANATHAN,B.E.,(I/c)
Chief Engineer/Projects I,
V Floor, Western Wing,
144, Anna Salai,
Chennai-600 002.
Fax No : 044- 28520878
Cell No: 9445857543
Email ID: cepr@tnebnet.org

To
Er.Anil Kumar Pal,Sr Mnager –PG II,
M/s. Bharat Heavy Electrical Limited,
Project Engineering Management
PPEI Building, HRDI & ESI Complex,
Plot No.25, Sector-16A, Noida-201301(U.P)
Fax : 0120-423522
E mail : anujkumar@bhelpem.co.in,
jd@bhel.in,deveshverma@bhel.in,
pmgss@bhel.in, rajivb@bhel.in

Lr.No.CE/P/SE/E/ P- I/EE.II/E/AEE/M/F. Ennore SEZ Vendor Appl/D.998 /20,dt 14.10.20

Sir,

Sub: TANGEDCO - Setting up of 2x660 MW Ennore SEZ Coal based super critical thermal power project at ash dyke of North Chennai Thermal Power Station (Kattupalli) – EPC cum Debt Finance Contract awarded to M/s.BHEL on 27.09.2014 - Sub Vendor Items approval sought by BHEL/PEM for "SUPPLY OF BLOWERS IN EFFLUENT TREATMENT PLANT" -Approval accorded –Reg.

Ref:
1) Lr.No. CE/P/SE/M/P/EE-10/E/P/F.2x660 MW Ennore SEZ STPP / D.60/14,dt.27.09.2014.
2) Your letter Ref: MS-1-13-E-0005 dated 27.09.2014.
3) Lr.No.CE/P/SE/E/T&H(P)/EE-6/E/P/F. 2X660 Ennore SEZ STPP/D. 115 /14,dt 19.12.14.
4) BHEL/PEM Lr.No PEM-412-ENNORE-23/17 dated 25.05.2017 (Hard copy received on 29.05.17).
5) Lr.No.CE/P/SE/E/T&H(P)/EE-6/E/P/AEE/M/F. 2X660 Ennore SEZ STPP/D. 186 /17,dt 13.06.17.
6) Lr.No.CE/P/SE/E/T&H(P)/EE-6/E/P/F. Ennore SEZ Vendor Appl/ D. 226 /17,dt 03.07.17
7) BHEL/PEM Ref:PE-X-22/412/8VA/ETP1 dated 15.07.17. (Hard copy received on 20.07.17)
8) Lr.No.CE/P/SE/E/T&H(P)/EE-6/E/P/F. Ennore SEZ Vendor Appl/ D. 265 /17,dt 07.08.17
9) BHEL email dated 14.08.2017
10) Lr.No.CE/P/SE/E/T&H(P)/EE-6/E/P/F. Ennore SEZ Vendor Appl/ D. 287 /17,dt 26.08.17
11) BHEL/PEM Ref:BHEL/EPC/ETPS/19-20/JULY/03 dt 09.07.19 (received on 12.07.19)
12) Lr.No.CE/P/SE/E/P-1/AEE/M/F, Ennore SEZ Vendor Appl/ D.298 /19,dt 08.08.19
13) BHEL letter Ref: No BHEL /EPC/ETPS/20-21/SEP/01 Dt.10.09.2020 (Received on.29.09.2020)

14) DESEIN recommended letter D4027/TANGEDCO/8347/29.SEP.2020.

****

In Continuation to the sub vendor approval accorded vide Ref (12), the following firm is hereby approved for SUPPLY OF BLOWERS against EFFLUENT TREATMENT PLANT package awarded to M/s.Clear water Limited, New Delhi

S.No	Work Description	Name of the Agencies	TANGEDCO Remarks on Sub Vendor approval for 2X660MW Ennore SEZ
01.	Blower	M/s Kulkarni Power Tools,Mumbai	**Approved**

Yours Sincerely,

29/10/2020

CHIEF ENGINEER /PROJECTS I

Copy to the CE/Civil/Ennore Sez/Chennai -120. (by email)
Copy to the SE/Electrical/Ennore Sez/Chennai -120(by email)
Copy to M/S.Desein Pvt Ltd, New Delhi. (by email)

TAMILNADU GENERATION AND DISTRIBUTION CORPORATION

From	To
Er.S.SUYA JOTHI,B.E., Superintending Engineer/Electrical/ Projects-I, TANGEDCO,5th Floor, Western wing, 144,NPKRR Maaligai, Anna salai, Chennai-2 Mobile:+919445859001 Email: sepr1@tnebnet.org	Shri Madan Lal, DGM,BHEL/PS-PMG, Tower-A,4th floor, Advant Navis Business Park, Plot No:7, Sector-142, Expressway Noida, Gautam Buddh Nagar(UP) - 201305 Direct:0120- 6748021 Mobile :+919425080823 Email : mlal@bhel.in)

Lr.No.:SE/E/PrI/EE-7/M/AEE/M/F.En SEZ STPP/D.130/19 dt.03.09.2019

Project Title	2x660 MW ENNORE SEZ Supercritical TPP
TANGEDCO REF.	LOA. Lr.No. CE/P/SE/M/P/EE-10/E/P/F.2x660 MW En SEZ STPP/D.60/14,dt.27.09.'14
BHEL REF.	1.BHEL Emails Dt.20.08.'19,24.08.'19. 2.DESEIN REF:D6953,D6954,D6962 dt.21.08.'19,D6968 dt.26.08.'19.
Subject	TANGEDCO –Approval on ETP drawings-submitted by M/s BHEL/PEM - Reg

Sir,
The approval on the drawing/document submitted by M/s BHEL on the above subject received vide BHEL transmittal under reference (1) is furnished below.

S.No.	DRG/DOC.No:	Rev.	DESCRIPTION	Status
1	PE-V0-412-164-A003	1	Data sheet for Metering Pumps for ETP	04
2	PE-V0-412-164-A007	2	Technical data sheet for Screw Pumps for ETP	04
3	PE-V0-412-164-A012	2	QAP for Screw pumps with motor for ETP	04
4	PE-V0-412-164-A016	1	QAP for Metering pumps with motor for ETP	04

Status : Category 1- Approved. Category: 2 – Approved with comments, Resubmit for approval under, Category 1. Category 3 – Not approved (See attachment Memo) Resubmit for approval. Category 4 – Information furnished is noted.

Yours faithfully,
-sd-/dt.03.09.2019
Superintending Engineer/E/PrI

REV	DATE	ALTERED	CHECKED	DOC. TITLE :
				QAP FOR SCREW PUMPS WITH MOTOR FOR EFFLUENT TREATMENT PLANT
				STATUS : CONTRACT
				JOB NO.: 17-04

BHARAT HEAVY ELECTRICALS LTD
PROJECT ENGINEERING MANAGEMENT.

This approval status shall be interpreted as laid down in the contract and it shall not relieve the contractor from the contractual obligation.

APPROVAL CATEGORY AWARDED = I

CAT I - Approved
CAT II - Approved With Comments as Noted
CAT III - Not Approved
CAT IV - Reference Drawing

DEPARTMENT	MECHANICAL AUXILIARY
NAME: FALGUNI SAHA	2020

FALGUNI SAHA
2020.02.05 13:54:06 +05'30'

DOC APPROVED VIDE Lr.No.:SE/E/PrI/EE-7/M/AEE/M/F.En SEZ STPP/D.130/19 dt.03.09.2019

CUSTOMER: **TAMILNADU GENERATION & DISTRIBUTION CORPORATION LTD.**
2x660 MW Ennore Sez STPP

PACKAGE: EFFLUENT TREATMENT PLANT

ORGINATOR	TURNKEY CONTRACTOR:-	**CWL. DOC. NO.**
	CLEAR WATER LTD. B-14/1, OKHLA INDUSTRIAL AREA PHASE-II, NEW DELHI-110020 PHONE: 011 26386095 EMAIL: clearwater@bol.net.in	**QAP-01/17-04M(92)** **Dtd. 01.05.2019**

BHARAT HEAVY ELECTRICALS LIMITED

PROJECT ENGINEERING MANAGEMENT, NEW DELHI

REV.	NAME	SIGN	DATE	BHEL DOCUMENT NO.	REV
				PE-V0-412-164-A012	02
01	R. R. BAGARI		01.05.2019		
00	R. R. BAGARI		03.04.2019	NO. OF SHEETS: 1	EXCLUDING COVER PAGE

QUALITY ASSURANCE PLAN

Clear Water Doc. No. QAP-1 [17-04M(83)]

UT PUMPS & SYSTEMS PVT. LTD.
14/7,MATHURA ROAD,
FARIDABAD -121003

Single Screw Pump

CUSTOMER : Clear Water Limited
PROJECT : 2x660 MW Ennore SEZ STPP
P.O.NO. : 92-1704 dt 27.11.18
PUMP MODEL. : Single Screw Pumps

BHEL DOC NO.

QAP NO. : QAP - 118187
DATE : 20-8-19
REVISION : 02

PE-V0-412-164-A012

S.NO	Component/Operation	Characteristic	Classification	Type of check	Quantum of Check	Referance Document	Acceptance Norms	Format of Record	Agency P	Agency W	Agency V	Remarks
(I)	**RAW MATERIAL**											
1	Pump Casing	Physical Properties	Major	Test & analysis	1/Heat	Approved data sheet	CI Gr FG -260, IS 210	Supplier's TC	3	-	1	
2	Shaft & Rotor	Chemical Properties	Major	Test & analysis	1/Heat	Approved data sheet	AISI 316	Test Report	2	-	1	
3	Stator	Finish & Dimensions	Major	Visual	Lot	Mfg. Std.	Mfg. Std.	Test Certificate	2	-	1	
4	Bearing, Packings etc.	Size, make & No.	Major	Visual, Measurement	100%	Mfrs. Std.	Mfrs. Std.	Cert. of Conformance	2	-	1	
(II)	**IN-PROCESS INSP.**											
1	Pump Casing	Leak Tightness	Critical	Hydro Test at 1.5 times of disch Press.	100%	Appd. Data Sheet	No Leakage	Test Report	2	-	1	
		Dimensions & Finish	Major	Visual, Measurement	100%	Mfrs. Std/ Drg.	Mfrs. Std/ Drg.	Cert. of Conformance	2	-	1	
2	All Components	Workmanship,Finish & Dimensions	Major	Visual, Measurement	100%	Mfrs. Std./Drg.	Mfrs. Std./Drg.	Cert. of Conformance	2	-	1	
(III)	**FINAL INSPECTION**											
1	Pump Assembly	Completeness, Correctness & Cleanliness	Major	Visual	100%	Mfg. Drgs.	Mfg. Drgs.	Cert. of Conformance	2	-	1	
		Performance Test										
		Head Vs Power Head Vs Capacity	Major	Performance Check	1/Model	Appd. Data sheet	VDMA-24284. Gr. II Cl. II	Test Certificate	2	1	-	
		Noise Level	Major	Meeasurement	1/Model	85 dbA Max.	85 dbA Max.	Test Certificate	2	1	-	
2	Pump mounted On Base Frame	Overall Dimensions	Critical	Visual, Measurement	1/Each Type	Appd. G.A. Drg.	Appd. G.A. Drg.	Insp. Report	2	1	-	
(IV)	**PAINTING**	Surface Preparation & colour shade	Major	Visual	100%	UTPSL Std/ Appd data sheet	UTPSL, Std/Appd data sheet	Cert. of Conformance	2	-	1	

PREPARED BY :-

Name :

Sign. :-

LEGENDS :- P -Perform, W-Witness ,V- Verification
1 -Inspection Agency / Client , 2 - UTPSL, 3 - Vendor

Remarks :- 1. Pump shall be tested at rated speed with job/shop motor using Water Oil Emlsion at 1 cst.
2. Performance test shall be witnessed of 1 pump per Model & Internal test report shall be reviewed of other pumps.

APPROVED BY :-

Name :-

Sign. :-

CLEAR WATER LTD. NEW DELHI

Bharat Heavy Electricals Limited PPEI SECTOR-16A NOIDA 201301 PEM/Mech.Aux.

TAMILNADU GENERATION AND DISTRIBUTION CORPORATION

From	To
Er.S.SUYA JOTHI,B.E., Superintending Engineer/Electrical/ Projects-I, TANGEDCO,5th Floor, Western wing, 144,NPKRR Maaligai, Anna salai, Chennai-2 Mobile:+919445859001 Email: sepr1@tnebnet.org	Shri Madan Lal, DGM,BHEL/PS-PMG, Tower-A,4th floor, Advant Navis Business Park, Plot No:7, Sector-142, Expressway Noida, Gautam Buddh Nagar(UP) - 201305 Direct:0120- 6748021 Mobile :+919425080823 Email : mlal@bhel.in)

Lr.No.:SE/E/PrI/EE-7/M/AEE/M/F.En SEZ STPP/D.130/19 dt.03.09.2019

Project Title	2x660 MW ENNORE SEZ Supercritical TPP
TANGEDCO REF.	LOA. Lr.No. CE/P/SE/M/P/EE-10/E/P/F.2x660 MW En SEZ STPP/D.60/14,dt.27.09.'14
BHEL REF.	1.BHEL Emails Dt.20.08.'19,24.08.'19. 2.DESEIN REF:D6953,D6954,D6962 dt.21.08.'19,D6968 dt.26.08.'19.
Subject	TANGEDCO –Approval on ETP drawings-submitted by M/s BHEL/PEM - Reg

Sir,
The approval on the drawing/document submitted by M/s BHEL on the above subject received vide BHEL transmittal under reference (1) is furnished below.

S.No.	DRG/DOC.No:	Rev.	DESCRIPTION	Status
1	PE-V0-412-164-A003	1	Data sheet for Metering Pumps for ETP	04
2	PE-V0-412-164-A007	2	Technical data sheet for Screw Pumps for ETP	04
3	PE-V0-412-164-A012	2	QAP for Screw pumps with motor for ETP	04
4	PE-V0-412-164-A016	1	QAP for Metering pumps with motor for ETP	04

Status : Category 1- Approved. Category: 2 – Approved with comments, Resubmit for approval under, Category 1. Category 3 – Not approved (See attachment Memo) Resubmit for approval. Category 4 – Information furnished is noted.

Yours faithfully,
-sd-/dt.03.09.2019
Superintending Engineer/E/PrI

DOC APPROVED VIDE Lr.No.:SE/E/PrI/EE-7/M/AEE/M/F.En SEZ STPP/D.130/19 dt.03.09.2019

2X660 MW ENNORE SEZ COAL BASED STPP AT ASH DYKE OF NCTPS, CHENNAI
CUSTOMER: TAMILNADU GENERATION AND DISTRIBUTION CORPORATION LTD. (TANGEDCO)
MINUTES OF MEETING FOR MAUX PACKAGES DURING ERM DATED 30-31 July 2019 AT PSSR HQ CHENNAI

DOC. TITLE :TECHNICAL DATA SHEET OF SCREW PUMPS FOR EFFLUENT TREATMENT PLANT
BHEL DOCUMENT NO. :PE-V0-412-164-A007

SNo.	TANGEDCO Comments	BHEL Reply	Resolution
01.	MOC of Drive shaft for all the pumps shall be CF8M.	Noted ; Doc. revised	Noted. Point Closed.
02.	Capacity of Lime solution Transfer pump shall be 5 Cu.m./hr.	As per approved P & I Drg. And process sizing calculations capacity is 0.5cu.m/hr	Noted. Point Closed.
03.	TDS for screw pumps for Fuel Oil area sump transfer pump (1W + 1S – Cap.10 Cu.m./hr) & TDS for screw pumps for Fuel oil overflow sump Transfer pump (1W + 1S – Cap.10 Cu.m./hr) to be included in this document.	These pumps are not part of ETP package. Data sheet of Fuel Oil area sump transfer pump have been submitted and approved separately. (Drawing : PE-V0-412-166-A005: DATASHEET & GAD OF SCREW PUMPS & MOTORS FOR FOHS)	BHEL informed that 2 nos Sump pumps (30 m3/hr. each) have been included in fuel oil area oil separator for transferring outlet water to TPI oil separator in ETP area. The details of Sump pumps is part of Datasheet & GAD of Sump Pumps & Motors in FOHS (doc no PE-V0-412-166-A048) TANGEDCO Noted. Point Closed.
04.	Sludge transfer pump is to 'vertical' type. Hence remove it from TDS of screw pumps and include the same in TDS of vertical pumps for ETP (yet to be uploaded in PEDM) with MOC of the pump as Forged Duplex SS.	As per approved P & I drg. Sludge transfer pump is of Horizontal nature for transfer of sludge.	BHEL informed that screw pumps of SS 316 for sludge application is suitable as per approved P&ID . TANGEDCO noted. Point closed.
05.	Attach sub- vendor approval by TANGEDCO with ref.	Sub Vender list already submitted to **TANGEDCO** Vide PE-V0-412-164-A034	BHEL informed that sub-vendor list for ETP is pending with TANGEDCO . Sub-vendor shall be selected from approved sub-vendor for screw pumps and updated in the data sheet of screw pumps.

Based on the above Revised document will be submitted to TANGEDCO for formal approval.

(BHEL) 31/7/19

(DESEIN)

(TANGEDCO) 1.8.19

Sub-vendor list doc no. PE-V0-412-164-A034 is approved by TSGENCO on 08-08-2019.
UT pumps is approved.

REV	DATE	ALTERED	CHECKED	DOC. TITLE :
				TECHNICAL DATA SHEET OF SCREW PUMPS FOR EFFLUENT TREATMENT
				STATUS : CONTRACT
				JOB NO.: 17-04

DOC APPROVED VIDE Lr.No.:SE/E/PrI/EE-7/M/AEE/M/F.En SEZ STPP/D.130/19 dt.03.09.2019

BHARAT HEAVY ELECTRICALS LTD
PROJECT ENGINEERING MANAGEMENT.

This approval status shall be interpreted as laid down in the contract and it shall not relieve the contractor from the contractual obligation.

APPROVAL CATEGORY AWARDED = I

CAT I - Approved
CAT II - Approved With Comments as Noted
CAT III - Not Approved
CAT IV - Reference Drawing

DEPARTMENT	MECHANICAL AUXILIARY
NAME: FALGUNI SAHA	

FALGUNI SAHA
2020.02.05 13:53:08 +05'30'

CUSTOMER: **TAMILNADU GENERATION & DISTRIBUTION CORPORATION LTD.**
2x660 MW Ennore Sez STPP

PACKAGE: EFFLUENT TREATMENT PLANT

ORGINATOR	TURNKEY CONTRACTOR:-	**CWL. DOC. NO.**
	CLEAR WATER LTD. B-14/1, OKHLA INDUSTRIAL AREA PHASE-II, NEW DELHI-110020 PHONE: 011 26386095 EMAIL: clearwater@bol.net.in	**DS-01/17-04M(83) REV 01** **Dtd. 03.04.2019**

BHARAT HEAVY ELECTRICALS LIMITED

PROJECT ENGINEERING MANAGEMENT, NEW DELHI

REV.	NAME	SIGN	DATE	BHEL DOCUMENT NO.	REV
				PE-V0-412-164-A007	02
01	R. R. BAGARI		03.04.2019		
00	R. R. BAGARI		16.01.2019	NO. OF SHEETS: 8	EXCLUDING COVER PAGE

BHEL Document No. PE-V0-412-164-A007				
Clear Water Limited **B-14/1, Okhla Indl. Area, Phase-II,** **New Delhi- 110 020**		**DATA SHEET** **TECHNICAL DATA SHEET OF SCREW PUMPS FOR EFFLUENT TREATMENT PLANT**	**CWL DOC. No.**	**DS-01/17-04M(83)**
				Rev-02
			Sheet	**1 of 2**
	OPERATING CONDITIONS			
	Services	Power House Area Service Waste water transfer pump	I) Coal Mill Oily Waste water transfer pump ii)	Coal Mill Oily Waste water transfer pump
	Hold up Capacity (Cu.m)	10	5	85
	Tag No	a) 10GNA04/AP001 &2 b) 20GNA04/AP001 &2	a)10GNA02/AP001 & 2 b) 10GNA03/AP001 & 2 c) 20GNA02/AP001 & 2 d) 20GNA03/AP001 & 2	a) 10GNA01/AP01 & 2 b) 20GNA01/AP001 & 2
	Liquid	Oily Waste water	Oily Waste water	Oily Waste Water
	Operational period	Intermittent	Intermittent	Intermittent
	Operating Temperature	Ambient (Assumed)	Ambient (Assumed)	Ambient (Assumed)
	Operating Viscosity	2 – 5 cst	2 – 5 cst	2 – 5 cst
	Suction Condition (Maximum)	(-) 3 m	(-) 3 m	(-) 3 m
	Differential Head (MWC)	20	20	20
	Capacity Required (M^3 /hr)	15	5	10
	Quantity (Nos)	a) 02 (1W + 1SB) b) 02 (1W + 1SB)	a) 02 (1W + 1SB) b) 02 (1W + 1SB) c) 02 (1W + 1SB) d) 02 (1W + 1SB)	a) 02 (1W + 1SB) b) 02 (1W + 1SB)
	Pump Type	Horiz./ Single Screw Pump	Horiz./Single Screw Pump	Horiz./Single Screw Pump
	Pump Model	**EH1024**	**EH 375**	**E2H 1024**
	Operating Speed	300 RPM	280 RPM	390 RPM
	Capacity available @ minimum Viscosity	15 m^3/hr. @ 2 cST	5 m^3/hr. @ 2 cST	10 m^3/hr. @ 2 cST
	Power absorbed at - - @ Differential Head	3.0 kW @ 5 cST	1.5 kW @ 5 cST	2.4 kW @ 5 cst
	Drive Arrangement	thru V belt / pulley	thru V belt / pulley	thru V belt / pulley
	Maximum Suction Lift (M)	(-) 3.0	(-) 3.0	(-) 3.0
	Motor	**TEFC/NFLP 3.7 KW/1450 RPM, IE2, Horizontal Foot Mounted**	**TEFC/NFLP 2.2 KW/1450 RPM, IE2, Horizontal Foot Mounted**	**TEFC/NFLP 3.7 KW/1450 RPM, IE2, Horizontal Foot Mounted**

Rev	Description	Date
01	Revised as commented	03.04.2019
00	Submitted for approval	16.01.2019

Project: 2x660 MW Ennore Sez STPP
Client: Tamilnadu Generation & Distribution Corporation Limited
Consultant: Desein Pvt Ltd. New Delhi

BHEL Document No. PE-V0-412-164-A007			
Clear Water Limited **B-14/1, Okhla Indl. Area, Phase-II,** **New Delhi- 110 020**	**DATA SHEET** **TECHNICAL DATA SHEET OF SCREW PUMPS FOR EFFLUENT TREATMENT PLANT**	**CWL DOC. No.**	**DS-01/17-04M(83)**
			Rev-02
		Sheet	**2 of 2**

	Material of Construction of Pump			
	Casing	CI IS 210 Gr. FG-260 2% Ni	CI to IS 210 Gr. FG- 260 2% Ni	CI to IS 210 Gr. FG - 260 2% Ni
	Rotor	SS – 316	SS – 316	SS – 316
	Joint Shaft	SS – 316	SS – 316	SS – 316
	Drive Shaft	CF 8M/ SS-316	CF 8M/ SS-316	CF 8M/ SS-316
	Stator	Nitrile Rubber	Nitrile Rubber	Nitrile Rubber
	Sealing	Gland Packing	Gland Packing	Gland Packing
	Base Frame	MS Fabricated	MS Fabricated	MS Fabricated
	CONNECTIONS			
	Mounting	Horizontal Foot Mounted; Motor on Top	Horizontal Foot Mounted; Motor on Top	Horizontal Foot Mounted; Motor on Top
	Inlet Size / Rating/ Position	80 NB/ ANSI-B16.5#150 ; FF/ Side	80 NB/ ANSI-B16.5#150 ; FF/ Side	80 NB/ ANSI-B16.5#150 ; FF/ Side
	Outlet Size/ Rating/ Position	65 NB/ ANSI-B16.5#150 ; FF/ Axial	50 NB/ ANSI-B16.5#150 ; FF/ Axial	50 NB/ ANSI-B16.5#150 ; FF/ Axial
	Direction of Rotation	CCW From Drive End	CCW From Drive End	CCW From Drive End
	PERFORMANCE TEST			
	Test Tolerance	VDMA 24284 Gr-II, Cl.II		
	Noise level (Max)	85 db		
	PAINTING	Epoxy	Epoxy	Epoxy
	ACCESSORIES			
	Base Frame / Safety Guard	Provided along with Pumps ; MS to IS:2062,Gr-A ;Epoxy Painted		
	V-Belt Pulley	Provided along with Pumps ; As per Mfr's Standard		
	Mandatory Spares	No Mandatory spares supply have been specified in spec. Spares are available with Sub-vendor generally ex-stock.		
	Total Weight (approx)	135 Kg	105 Kg	135 Kg
	Starting Torque	75 Nm	65 Nm	105 Nm
	DOCUMENTS			
	Product Drg. GA Drawing No	GA- 2155	GA- 2153	GA- 2155/01
	Performance Curve	PC_118087-EH 1024-01	PC_118087_EH 375-02	PC_118087_E2H 1024-03

Rev	Description	Date
01	Revised as commented	03.04.2019
00	Submitted for approval	16.01.2019

Project: 2x660 MW Ennore Sez STPP
Client: Tamilnadu Generation & Distribution Corporation Limited .
Consultant: Desein Pvt Ltd. New Delhi

BHEL Document No. PE-V0-412-164-A007			
Clear Water Limited **B-14/1, Okhla Indl. Area, Phase-II,** **New Delhi- 110 020**	**DATA SHEET** **TECHNICAL DATA SHEET OF SCREW PUMPS FOR EFFLUENT TREATMENT PLANT**	**CWL DOC. No.**	**DS-02/17-04M(83)**
			Rev-02
		Sheet	**1 of 2**

	OPERATING CONDITIONS			
	Services	Sludge transfer pump	Lime Solution transfer pump	Effluent Transfer Pump
	Tag No	90GNSO1/ AP001&2	90GNNO2/ AP001&2	90GTA02/AP001 & 2
	Liquid	Sludge	Lime Solution	Effluent
	Operational Period	Intermittent	Intermittent	Intermittent
	Operating Temperature	Ambient (Assumed)	Ambient (Assumed)	Ambient (Assumed)
	Operating Viscosity (cst) Maxm	20	10	20
	Suction Condition (Max) M	- 3	Flooded	- 3
	Differential Head (MWC) (Max)	20	10	10
	Capacity Required (m^3/hr.)	10	0.5	40
	Quantity (Nos)	02 (1W + 1SB)	02 (1W + 1SB)	02 (1W + 1SB)
	Pump Type	Single Screw Pump	Single Screw Pump	Single Screw Pump
	Pump Model	**EH 600**	**E2H 164**	**EH 1900**
	Operating Speed (RPM)	350	350	200
	Capacity available @ min. Visc.	10 m^3/hr. @ 2 cST	0.5 m^3/hr. @ 2 cST	40 m^3/hr. @ 2 cST
	Power absorbed at - - @ Differential Head	2.0 kW @ 5 cST	0.3 kW @ 5 cST	7.0 kW @ 5 cST
	Drive Arrangement	thru V belt / pulley	thru V belt / pulley	thru gear box/ motor
	Maximum Suction Lift	3.0 m	3.0 m	3.0 m
	Motor	**TEFC/NFLP 3.7 KW/1450 RPM, IE2, Horizontal Foot Mounted**	**TEFC/NFLP 0.75 KW/1450 RPM, IE2, Horizontal Foot Mounted**	**TEFC/NFLP 9.3 KW/960 RPM, IE2, Horizontal Foot Mounted**
	Material of Construction of Pump			
	Casing	CI IS 210 Gr. FG-260 2% Ni	CI to IS 210 Gr. FG-260 2% Ni	CI to IS 210 Gr. FG - 260 2% Ni
	Rotor	SS – 316	SS – 316	SS – 316
	Joint Shaft	SS – 316	SS – 316	SS – 316
	Drive Shaft	CF 8M/ SS-316	CF 8M/ SS-316	CF 8M/ SS-316

Rev	Description	Date
01	Revised as commented	03.04.2019
00	Submitted for approval	16.01.2019

Project: 2x660 MW Ennore Sez STPP
Client: Tamilnadu Generation & Distribution Corporation Limited .
Consultant: Desein Pvt Ltd. New Delhi

BHEL Document No. PE-V0-412-164-A007				
Clear Water Limited **B-14/1, Okhla Indl. Area, Phase-II,** **New Delhi- 110 020**		**DATA SHEET** **TECHNICAL DATA SHEET OF SCREW PUMPS FOR EFFLUENT TREATMENT PLANT**	**CWL DOC. No.**	**DS-02/17-04M(83)**
				Rev-02
			Sheet	**2 of 2**

	Stator	Nitrile Rubber	Nitrile Rubber	Nitrile Rubber
	Sealing	Gland Packing	Gland Packing	Gland Packing
	Base Frame	MS Fabricated	MS Fabricated	MS Fabricated
	CONNECTIONS			
	Mounting	Horizontal Foot Mounted, Motor on Top	Horizontal Foot Mounted Motor on Top	Horizontal Foot Mounted Motor on Top
	Inlet Size / Rating/ Position	80 NB/ B16.5 CL150 FF/Side	25 NB/B16.5 CL150 FF/ Side	125 NB/B16.5 CL150 FF/ Side
	Outlet Size/ Rating/ Position	65 NB/ B16.5 CL150 FF/Axial	20 NB/B16.5 CL150 FF/ Axial	100 NB/B16.5 CL150 FF/ Axial
	Direction of Rotation	CCW From Drive End	CCW From Drive End	CCW From Drive End
	PERFORMANCE TEST			
	Test Tolerance	VDMA-24284 Gr. II Cl II		
	Noise level (Max)	85 dB		
	PAINTING	Epoxy		
	ACCESSORIES			
	Base Frame / Safety Guard	Provided ; MS to IS:2062,Gr-A ;Epoxy Painted		
	V-Belt Pulley	Provided along with pump ; As per Mfr's Standard		
	Mandatory Spares	No Mandatory spares supply have been specified in spec. Spares are available with Sub-vendor generally ex-stock.		
	Total Weight (approx)Kg	125	55	200
	Starting Torque(Nm)	55	20	90
	DOCUMENTS			
	Product Drg. GA Drawing No	GA- 2154	GA- 2157	GA-2156
	Performance Curve	PC-118087-EH600-04	PC-118087-E2H 164-05	PC-118087-EH 1900

Rev	Description	Date
01	Revised as commented	03.04.2019
00	Submitted for approval	16.01.2019

Project: 2x660 MW Ennore Sez STPP
Client: Tamilnadu Generation & Distribution Corporation Limited .
Consultant: Desein Pvt Ltd. New Delhi

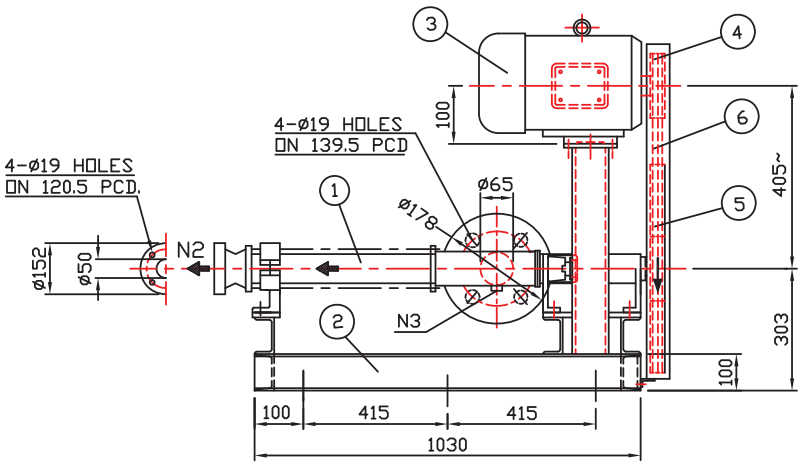

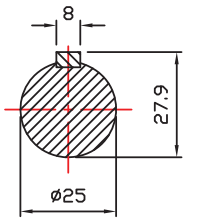

PUMP SHAFT END DETAIL

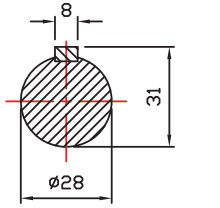

MOTOR SHAFT END DETAIL

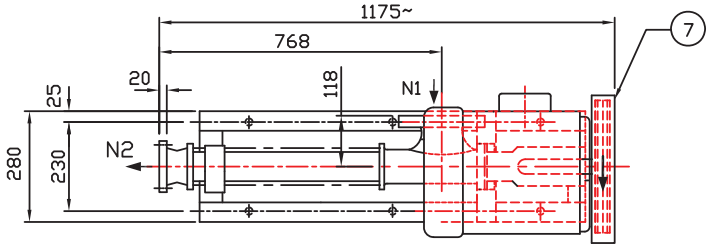

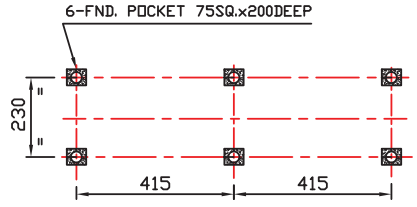

FOUNDATION POCKET DETAIL

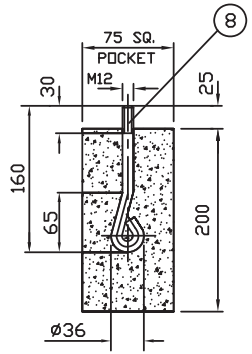

FOUNDATION BOLT
& POCKET DETAIL

* MOTOR FRAME SIZE TO BE CONFIRMED BY CWL.

S.No.	DESCRIPTION	TYPE/SIZE	QTY.	SCOPE OF SUPPLY
08	FOUNDATION BOLTS (SET)	M12x160L	06	UTPSL
07	BELT GUARD	MS FAB.	01	UTPSL
06	V-BELT	A-SEC.	02	UTPSL
05	PUMP PULLEY	2A 400	01	UTPSL
04	MOTOR PULLEY	2A 80	01	UTPSL
* 03	NFL MOTOR IE2, FRAME: 100L	2.2KW/1450RPM	01	CWL SCOPE
02	BASE FRAME	ISMC FAB.	01	UTPSL
01	PUMP (SINGLE SCREW)	EH-375	01	UTPSL

NOZZLE SCHEDULE

NOZZLE	DETAILS.	QTY	REMARKS
N1	65NB. FOR SUCTION	01	AS PER ANSI, CL-150 FF.
N2	50 NB. FOR DISCHARGE	01	AS PER ANSI, CL-150 FF.
N3	1/2" B.S.P. FOR DRAIN	01	PLUGGED CONNECTION

TECHNICAL DATA

LIQUID	:	OILY WASTE WATER
VISCOSITY	:	2-5 CST
CAPACITY REQD.	:	5m3/hr.
SUCTION HEAD	:	(-) 3M
DIFF. HEAD	:	15-20MWC
PUMP SPEED	:	280 RPM APPROX.
MOTOR RATING	:	2.2KW/1450RPM
DIR. OF ROTATION	:	CCW (VIEWING FROM DRIVE SIDE)

CUSTOMER	:	M/S. CLEAR WATER LTD.
PO. NO.	:	92-1704 DT. 27-11-2018
CLIENT	:	ENNORE
CONSULTANT	:	DESINEIN PVT. LTD.
PROJECT	:	2x660MW ENNOR SEZ STPP
ITEM DESC.	:	OILY WASTE WATER TRANSFER PUMPS
TAG NOS.	:	PUMP A'-10GNA02/AP001 & 10GNA02/AP002
	:	PUMP B'-20GNA03/AP001 & 20GNA03/AP002

2018	NAME	DATE
DRAWN	BS	28/11
CHECKED		
APPROVED		

UT PUMPS & SYSTEMS PVT. LIMITED
FARIDABAD

PUMP MODEL	DESCRIPTION	SCALE
EH-375	G.A. DRAWING OILY WASTE WATER TRANSFER PUMPS	NTS.
W.O. NO. 118187	DRG.NO. GA-2153	Rev. 0

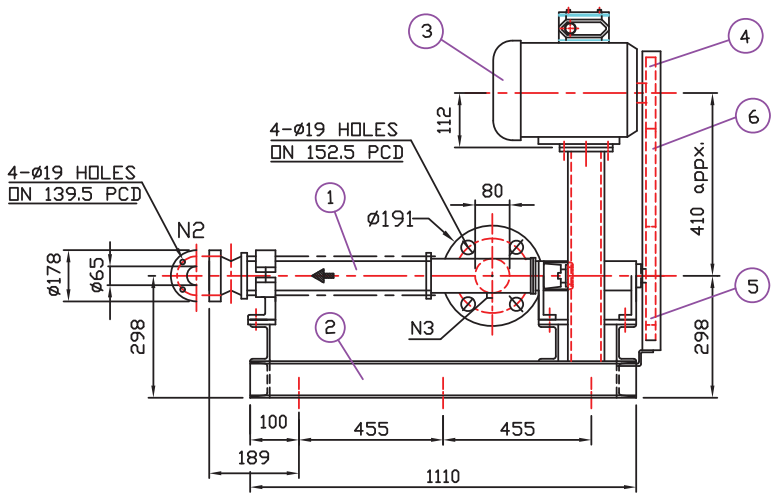

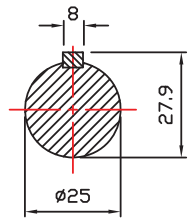

PUMP SHAFT END DETAIL

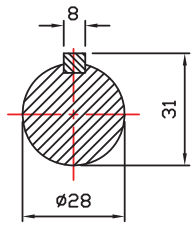

MOTOR SHAFT END DETAIL

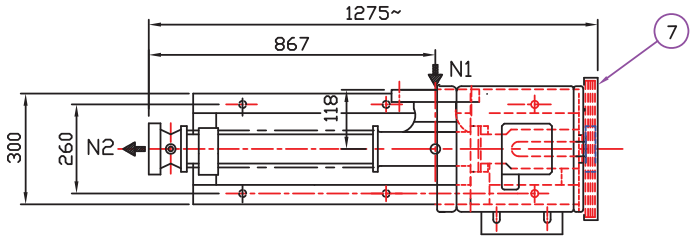

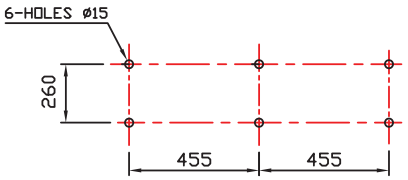

BASE FRAME MOUNTING DETAIL

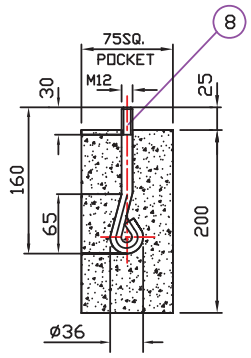

FOUNDATION BOLT

NOZZLE SCHEDULE

NOZZLE	DETAILS.	QTY	REMARKS
N1	80 NB. FOR SUCTION	01	AS PER ANSI, CL-150 FF.
N2	65 NB. FOR DISCHARGE	01	AS PER ANSI, CL-150 FF.
N3	1/2" B.S.P. FOR DRAIN	01	PLUGGED CONNECTION

TECHNICAL DATA

LIQUID	:	SLUDGE
VISCOSITY (MAX.)	:	20 CST
CAPACITY REQD.	:	10m3/hr.
SUCTION HEAD	:	(–) 3M
DIFF. HEAD	:	15–20MWC
PUMP SPEED	:	350 RPM APPROX.
MOTOR RATING	:	3.7KW/1450RPM
DIR. OF ROTATION	:	CCW (VIEWING FROM DRIVE SIDE)

CUSTOMER	:	M/S. CLEAR WATER LTD.
PO. NO.	:	92–1704 DT. 27–11–2018
CLIENT	:	ENNORE
CONSULTANT	:	DESINEIN PVT. LTD.
PROJECT	:	2x660MW ENNOR SEZ STPP
ITEM DESC.	:	SLUDGE TRANSFER PUMPS
TAG NOS.	:	90GNSO1/AP001& 90GNSO1/AP002
QTY.	:	02 NOS.

* MOTOR FRAME SIZE TO BE CONFIRMED BY CWL

S. No.	DESCRIPTION	TYPE/SIZE	QTY.	SCOPE OF SUPPLY
08	FOUNDATION BOLTS (SET)	M12x160L	06	UTPSL
07	BELT GUARD	MS FAB.	01	UTPSL
06	V-BELT	A SEC. (A-64)	03	UTPSL
05	PUMP PULLEY	2A 400	01	UTPSL
04	MOTOR PULLEY	2A 100	01	UTPSL
* 03	NFL MOTOR IE2,FRAME: 112M	3.7KW/1450 RPM	01	CWL SCOPE
02	BASE FRAME	ISMC FABRICATED	01	UTPSL
01	PUMP (SINGLE SCREW)	EH-600	01	UTPSL

2018	NAME	DATE	UT PUMPS & SYSTEMS PVT. LTD. FARIDABAD	
DRAWN	BS	28/11		
CHECKED				
APPROVED				
PUMP MODEL: EH-600			DESCRIPTION: G.A. DRAWING SLUDGE TRANSFER PUMPS	SCALE: NTS.
CUSTOMER: M/S. CLEAR WATER LTD.			DRG.NO. GA-2154	REV. 0
W.O. NO. 118187				

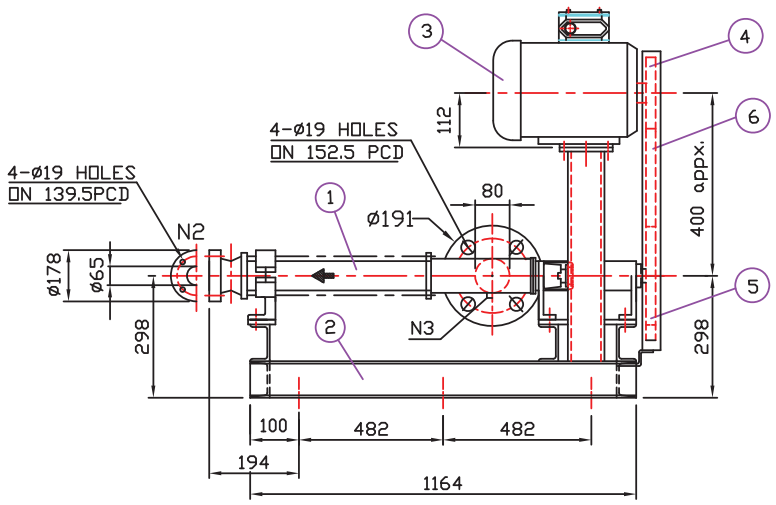

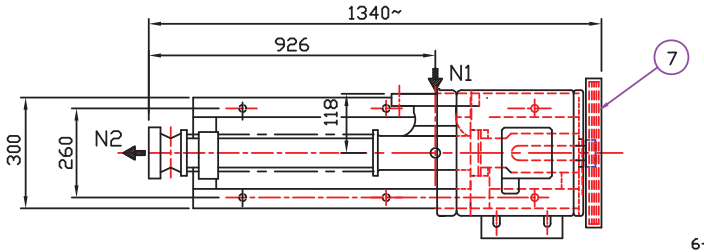

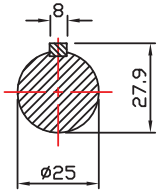

PUMP SHAFT END DETAIL

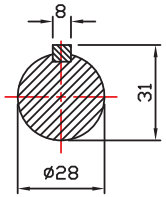

MOTOR SHAFT END DETAIL

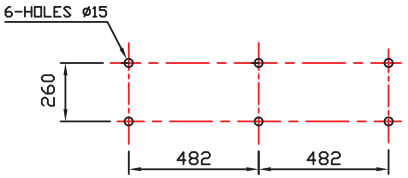

BASE FRAME MOUNTING DETAIL

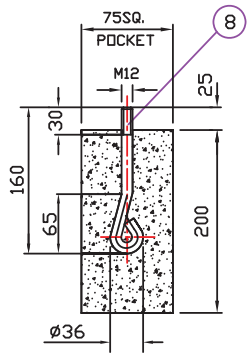

FOUNDATION BOLT

* MOTOR FRAME SIZE TO BE CONFIRMED BY CWL

	S.No.	DESCRIPTION	TYPE/SIZE	QTY.	SCOPE OF SUPPLY
	08	FOUNDATION BOLTS (SET)	M12x160L	06	UTPSL
	07	BELT GUARD	MS FAB.	01	UTPSL
	06	V-BELT	A-SEC.	03	UTPSL
	05	PUMP PULLEY	3A 400	01	UTPSL
	04	MOTOR PULLEY	3A 85	01	UTPSL
*	03	NFL MOTOR,IE2,FRAME: 112M	3.7KW/1450 RPM	01	CWL SCOPE
	02	BASE FRAME	ISMC FABRICATED	01	UTPSL
	01	PUMP (SINGLE SCREW)	EH-1024	01	UTPSL

NOZZLE SCHEDULE

NOZZLE	DETAILS	QTY	REMARKS
N1	80 NB. FOR SUCTION	01	AS PER ANSI, CL-150 FF.
N2	65 NB. FOR DISCHARGE	01	AS PER ANSI, CL-150 FF.
N3	1/2" B.S.P. FOR DRAIN	01	PLUGGED CONNECTION

TECHNICAL DATA

LIQUID	:	OILY WASTE WATER
VISCOSITY	:	2-5 CST
CAPACITY RQD.	:	15m3/hr.
CAPACITY AVL.	:	15m3/hr. @2SCT.
SUCTION HEAD	:	(-) 3M
DIFF. HEAD	:	15-20MWC
PUMP SPEED	:	300 RPM APPROX.
MOTOR RATING	:	3.7KW/1450RPM
DIR. OF ROTATION	:	CCW (VIEWING FROM DRIVE SIDE)

CUSTOMER	:	M/S. CLEAR WATER LTD.
PO. NO.	:	92-1704 DT. 27-11-2018
CLIENT	:	ENNORE
CONSULTANT	:	DESINEIN PVT. LTD.
PROJECT	:	2x660MW ENNOR SEZ STPP
ITEM DESC.	:	OILY WASTE WATER TRANSFER PUMPS
TAG NOS.	:	PUMP A'-10GNA01/AP001& 10GNA01/AP002
	:	PUMP B'-20GNA03/AP001& 20GNA03/AP002
QTY.	:	04 NOS.

2018	NAME	DATE	UT PUMPS & SYSTEMS PVT. LTD. FARIDABAD	
DRAWN	BS	28/11		
CHECKED				
APPROVED				
PUMP MODEL: EH-1024			DESCRIPTION: G.A. DRAWING OILY WASTE WATER TRANSFER PUMPS	SCALE: NTS.
CUSTOMER: M/S. CLEAR WATER LTD.			DRG.NO. GA-2155	REV. 0
W.O. NO. 118187				

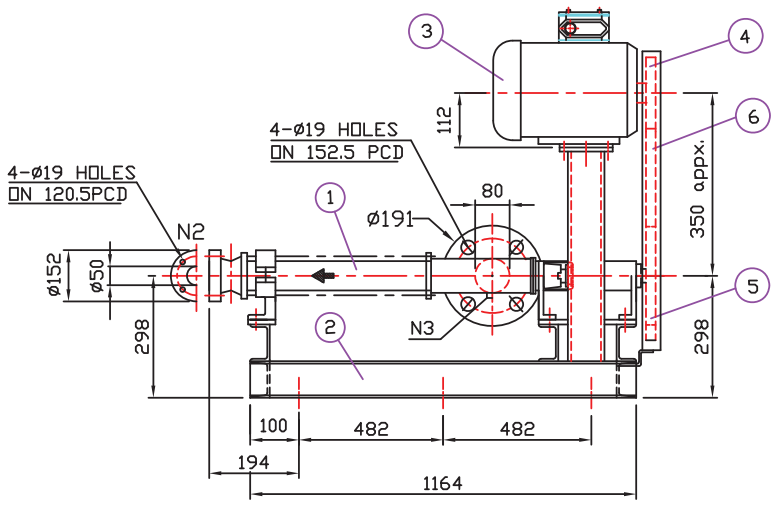

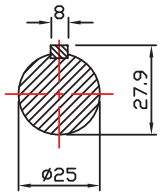

PUMP SHAFT END DETAIL

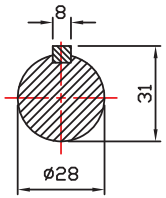

MOTOR SHAFT END DETAIL

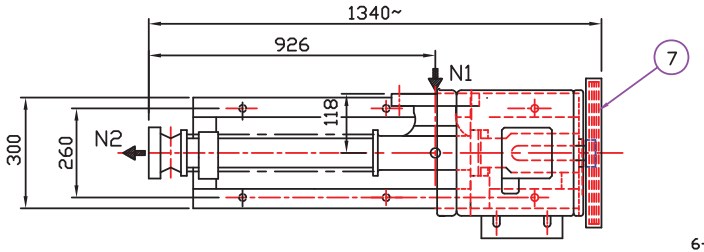

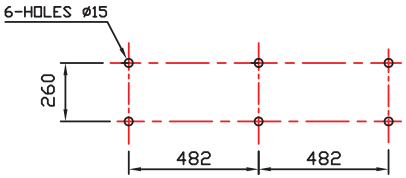

BASE FRAME MOUNTING DETAIL

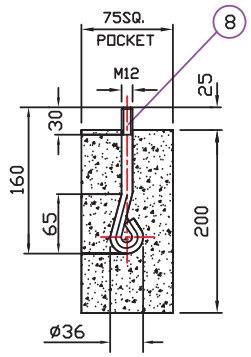

FOUNDATION BOLT

* MOTOR FRAME SIZE TO BE CONFIRMED BY CWL

	S.No.	DESCRIPTION	TYPE/SIZE	QTY.	SCOPE OF SUPPLY
	08	FOUNDATION BOLTS (SET)	M12x160L	06	UTPSL
	07	BELT GUARD	MS FAB.	01	UTPSL
	06	V-BELT	A-SEC.	03	UTPSL
	05	PUMP PULLEY	3A 300	01	UTPSL
	04	MOTOR PULLEY	3A 85	01	UTPSL
*	03	NFL MOTOR,IE2,FRAME: 112M	3.7KW/1450 RPM	01	CWL SCOPE
	02	BASE FRAME	ISMC FABRICATED	01	UTPSL
	01	PUMP (SINGLE SCREW)	E2H-1024	01	UTPSL

NOZZLE SCHEDULE

NOZZLE	DETAILS	QTY	REMARKS
N1	80 NB FOR SUCTION	01	AS PER ANSI, CL-150 FF.
N2	50 NB FOR DISCHARGE	01	AS PER ANSI, CL-150 FF.
N3	1/2" BSP. FOR DRAIN	01	PLUGGED CONNECTION

TECHNICAL DATA

LIQUID	:	OILY WASTE WATER
VISCOSITY	:	2-5 CST
CAPACITY RQD.	:	10m3/hr.
CAPACITY AVL.	:	10m3/hr. @2CST
SUCTION HEAD	:	(-) 3M
DIFF.HEAD	:	15-20MWC
PUMP SPEED	:	390 RPM APPROX.
MOTOR RATING	:	3.7KW/1450RPM
DIR. OF ROTATION	:	CCW (VIEWING FROM DRIVE SIDE)

CUSTOMER	:	M/S. CLEAR WATER LTD.
PO. NO.	:	92-1704 DT. 27-11-2018
CLIENT	:	ENNORE
CONSULTANT	:	DESINEIN PVT. LTD.
PROJECT	:	2x660MW ENNOR SEZ STPP
ITEM DESC.	:	OILY WASTE WATER TRANSFER PUMPS
TAG NOS.	:	PUMP A'-10GNA01/AP01& 10GNA01/AP02
	:	PUMP B'-20GNA01/AP001& 20GNA01/AP002
QTY.	:	04 NOS.

2018	NAME	DATE	UT PUMPS & SYSTEMS PVT. LTD. FARIDABAD	
DRAWN	BS	28/11		
CHECKED				
APPROVED				
PUMP MODEL: E2H-1024			DESCRIPTION: G.A. DRAWING OILY WASTE WATER TRANSFER PUMPS	SCALE: NTS.
CUSTOMER: M/S. CLEAR WATER LTD.			DRG.NO.: GA-2155/01	REV.: 0
W.O. NO.: 118187				

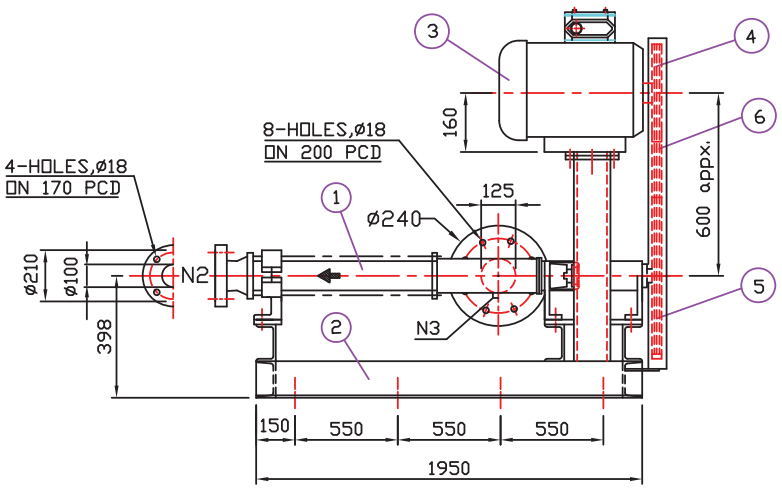

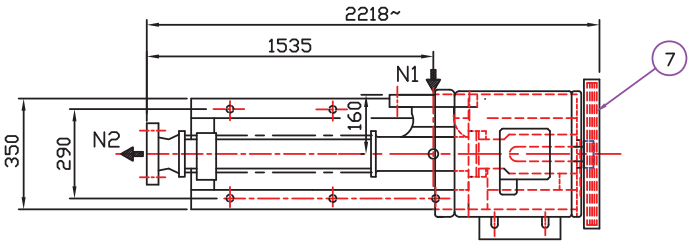

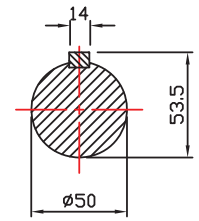

PUMP SHAFT END DETAIL

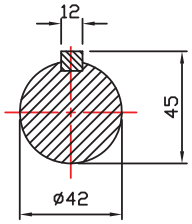

MOTOR SHAFT END DETAIL

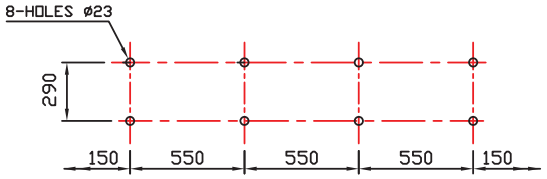

BASE FRAME MOUNTING DETAIL

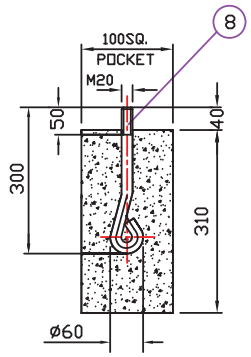

FOUNDATION BOLT

* MOTOR FRAME SIZE TO BE CONFIRMED BY CWL

S.No.	DESCRIPTION	TYPE/SIZE	QTY.	SCOPE OF SUPPLY
08	FOUNDATION BOLTS (SET)	M12x160L	08	UTPSL
07	BELT GUARD	MS FAB.	01	UTPSL
06	V-BELT	A-SEC.	04	UTPSL
05	PUMP PULLEY	4A600	01	UTPSL
04	MOTOR PULLEY	4A125	01	UTPSL
* 03	NFL MOTOR FRAME: 160M	9.3KW/960RPM	01	M/S. CLEAR WATER
02	BASE FRAME	ISMC FAB.	01	UTPSL
01	PUMP (SINGLE SCREW)	EH-1900	01	UTPSL

NOZZLE SCHEDULE

NOZZLE	DETAILS.	QTY	REMARKS
N1	125 NB. FOR SUCTION	01	AS PER IS:6392 TABLE-5,FF
N2	100 NB. FOR DISCHARGE	01	AS PER IS:6392 TABLE-5,FF
N3	1/2" B.S.P. FOR DRAIN	01	PLUGGED CONNECTION

TECHNICAL DATA

LIQUID	:	OILY WASTE WATER
VISCOSITY	:	2-5 CST
CAPACITY	:	40m3/hr.
SUCTION PR.	:	(-) 3M
DISCH. PR.	:	15-30M (1.5-3Kg/Cm2)
PUMP SPEED	:	200 RPM APPROX.
MOTOR RATING	:	9.3KW/960RPM
DIR. OF ROTATION	:	CCW (VIEWING FROM DRIVE SIDE)

CUSTOMER	:	M/S. CLEAR WATER LTD.
PROJECT	:	ETP ENNOR PROJECT
ITEM DESC.	:	OILY WASTE WATER TRANSFER PUMPS
QTY.	:	02 NOS. (1W + 1SB)

2018	NAME	DATE
DRAWN	BS	14/09
CHECKED		
APPROVED		

UT PUMPS & SYSTEMS PVT. LTD.
FARIDABAD

PUMP MODEL: EH-1900	DESCRIPTION: G.A. DRAWING OILY WASTE WATER TRANSFER PUMP	SCALE: NTS.
CUSTOMER: M/S. CLEAR WATER LTD.	DRG.NO.: GA-2156	REV.: 0
W.O. NO.: -		

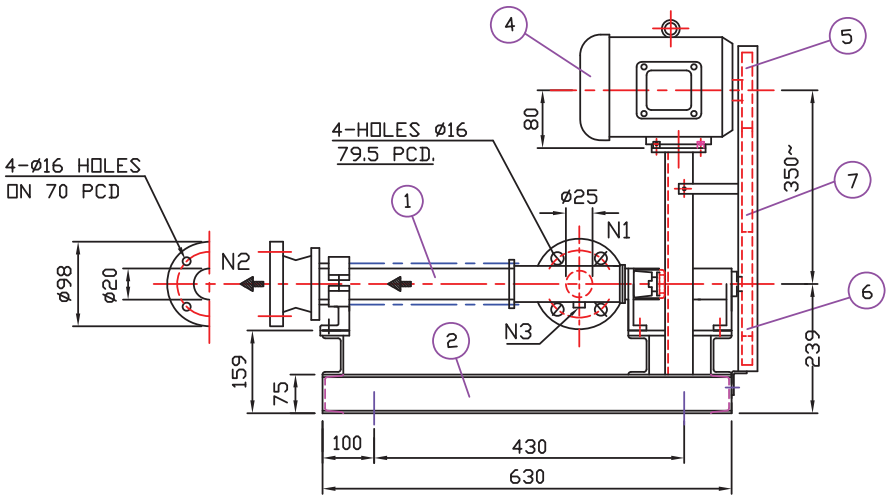

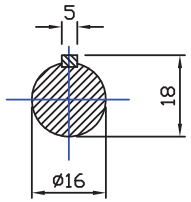

PUMP SHAFT END DETAIL

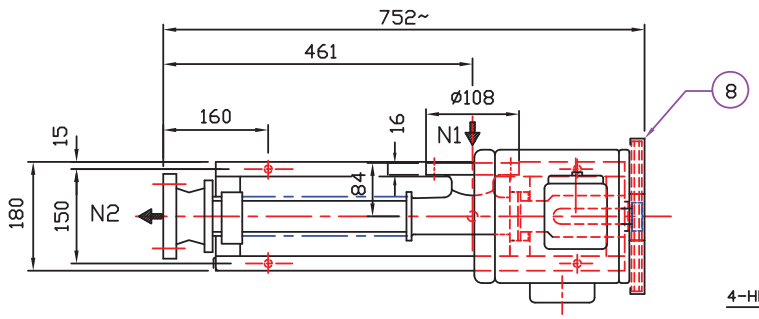

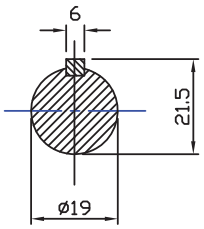

MOTOR SHAFT END DETAIL

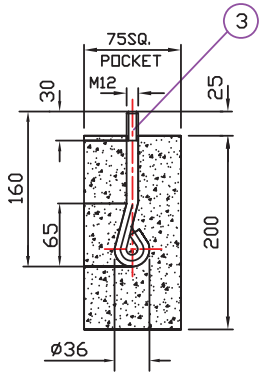

FOUNDATION BOLT

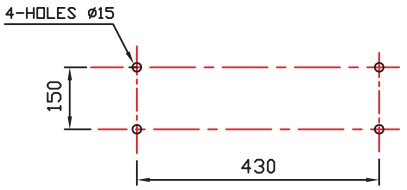

BASE FRAME MOUNTING DETAIL

NOZZLE SCHEDULE

NOZZLE	DETAILS	QTY	RATING.
N1	25 NB FOR SUCTION	01	AS PER ANSI, CL-150FF
N2	20 NB FOR DISCHARGE	01	AS PER ANSI, CL-150FF
N3	3/8" BSP FOR CASING DRAIN	01	PLUG CONNECTION

TECHNICAL DATA

LIQUID	:	LIME SOLUTION
VISCOSITY (MAX)	:	10 CST
CAPACITY REQD.	:	0.5m3/hr.
SUCTION PR.	:	FLOODED
DIFF. HEAD	:	5-10MWC
PUMP SPEED	:	350 RPM APPROX.
MOTOR RATING	:	0.75KW/1450RPM
DIR. OF ROTATION	:	CCW (VIEWING FROM DRIVE SIDE)

CUSTOMER	:	M/S. CLEAR WATER LTD.
PO. NO.	:	92-1704 DT. 27-11-2018
CLIENT	:	ENNORE
CONSULTANT	:	DESINEIN PVT. LTD.
PROJECT	:	2x660MW ENNOR SEZ STPP
ITEM DESC.	:	LIME SOLUTION TRANSFER PUMPS
TAG NOS.	:	90GNNO2/AP001& 90GNNO2/AP002
QTY.	:	02 NOS.

S. No.	DESCRIPTION.	TYPE/SIZE	QTY.	SCOPE OF SUPPLY
8	BELT GUARD	MS. FAB.	01	UTPSL
7	V- BELT	A SEC.	01	UTPSL
6	PUMP PULLEY	1A300	01	UTPSL
5	MOTOR PULLEY	1A75	01	UTPSL
4	NFL MOTOR,IE2 (FRAME: 80)	0.75KW/1450 RPM	01	CWL SCOPE
3	FOUNDATION BOLT	M12x160L	04	UTPSL
2	BASE FRAME	ISMC FABRICATED	01	UTPSL
1	PUMP SINGLE SCREW	E2H-164	01	UTPSL

REV.	MODIFICATIONS	DATE	SIGN.
03			
02			
01			

2018	NAME	DATE
DRAWN	BS	28/11
CHECKED		
APPROVED		

UT PUMPS & SYSTEMS PVT. LTD.
FARIDABAD

PUMP MODEL: E2H-164
W.O. NO.: 118187
DESCRIPTION: GA. DRAWING (LIME SOLUTION TRANSFER PUMP)
DRAWING NO.: GA-2157
SCALE: NTS.
ALL DIMN. ARE IN MM
REV.: 00

UT PUMPS & SYSTEMS PVT. LTD. 14/7, Mathura Road, Faridabad- 121 003	PERFORMANCE CURVE 0.5 m3/hr. @ 1 bar PUMP MODEL : E2H 164	REV. 0	DATE 29-11-2018

Guaranteed parameters are with tolerances as per VDMA 24284 Gr -II CL II on plotted value

n : 350 RPM

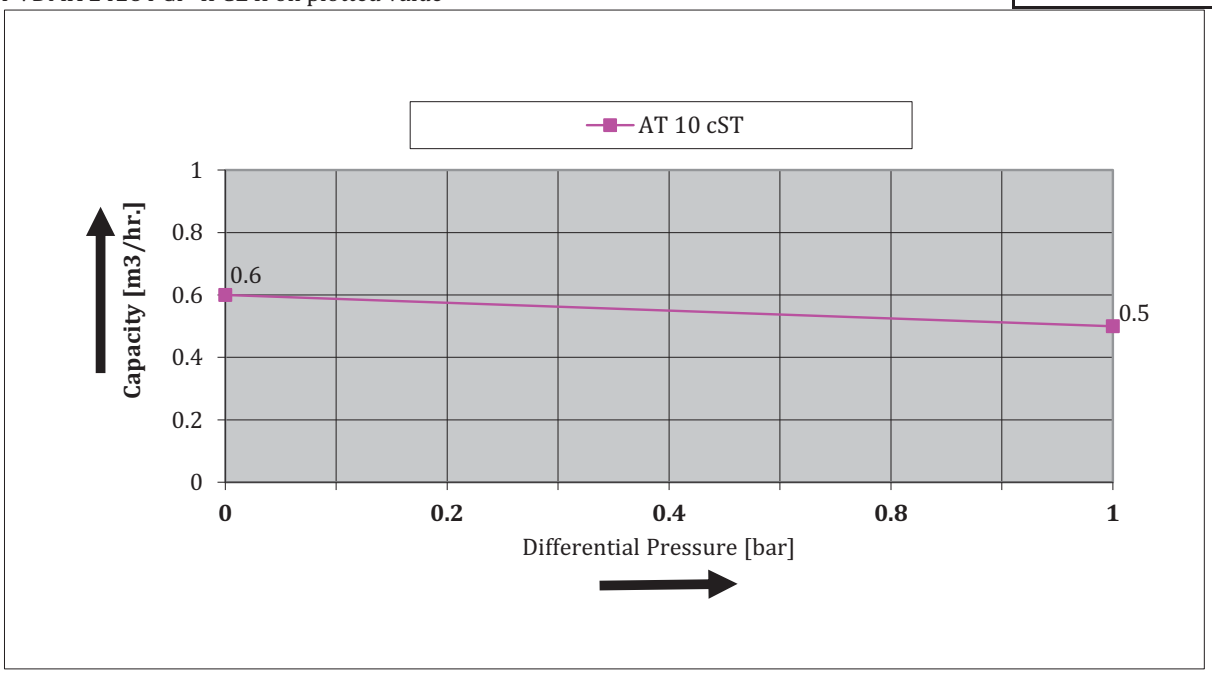

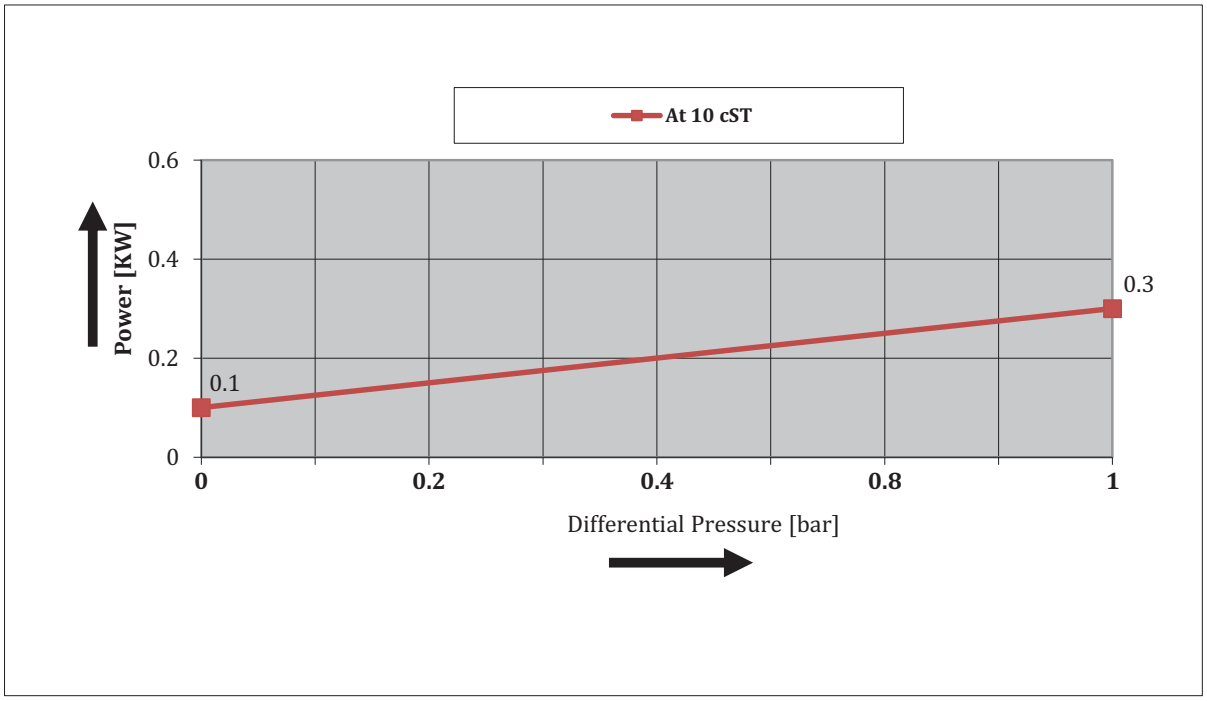

Made By
UT Pumps System Pvt. Ltd.
29-11-2018

UT PUMPS & SYSTEMS PVT. LTD. 14/7, Mathura Road, Faridabad- 121 003	PERFORMANCE CURVE 10 m3/hr. @ 2 bar PUMP MODEL : E2H 1024	REV. 0	DATE 29-11-2018

Guaranteed parameters are with tolerances as per VDMA 24284 Gr -II CL II on plotted value

n : 390 RPM

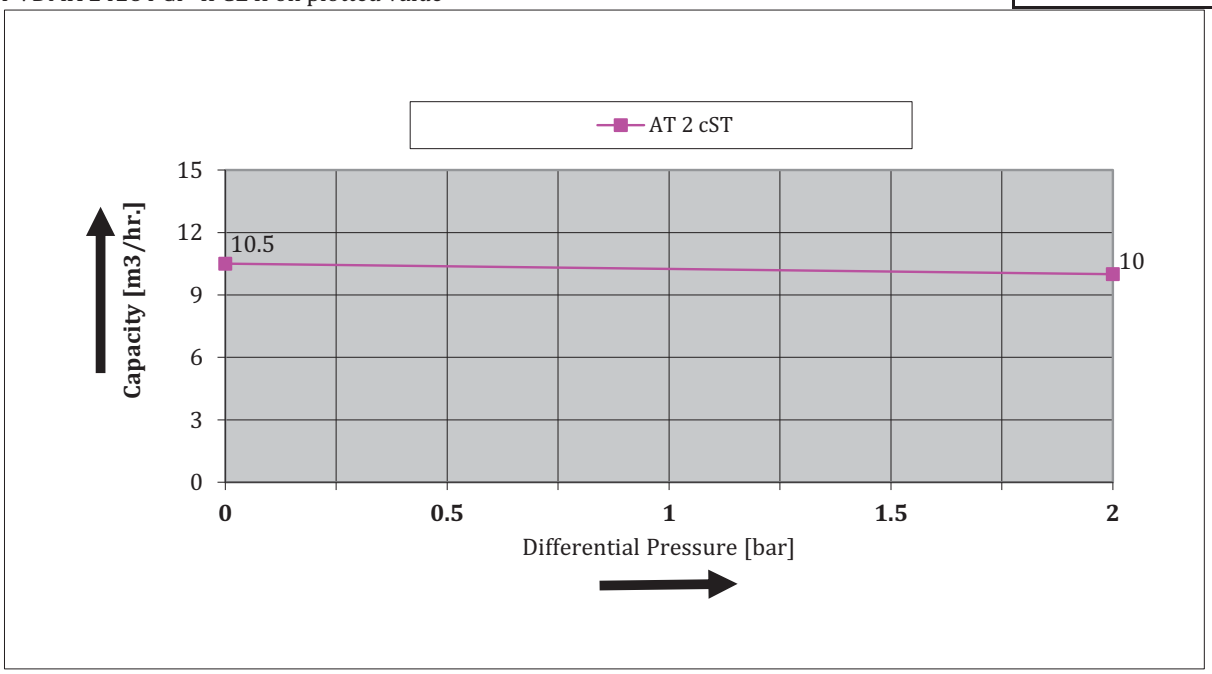

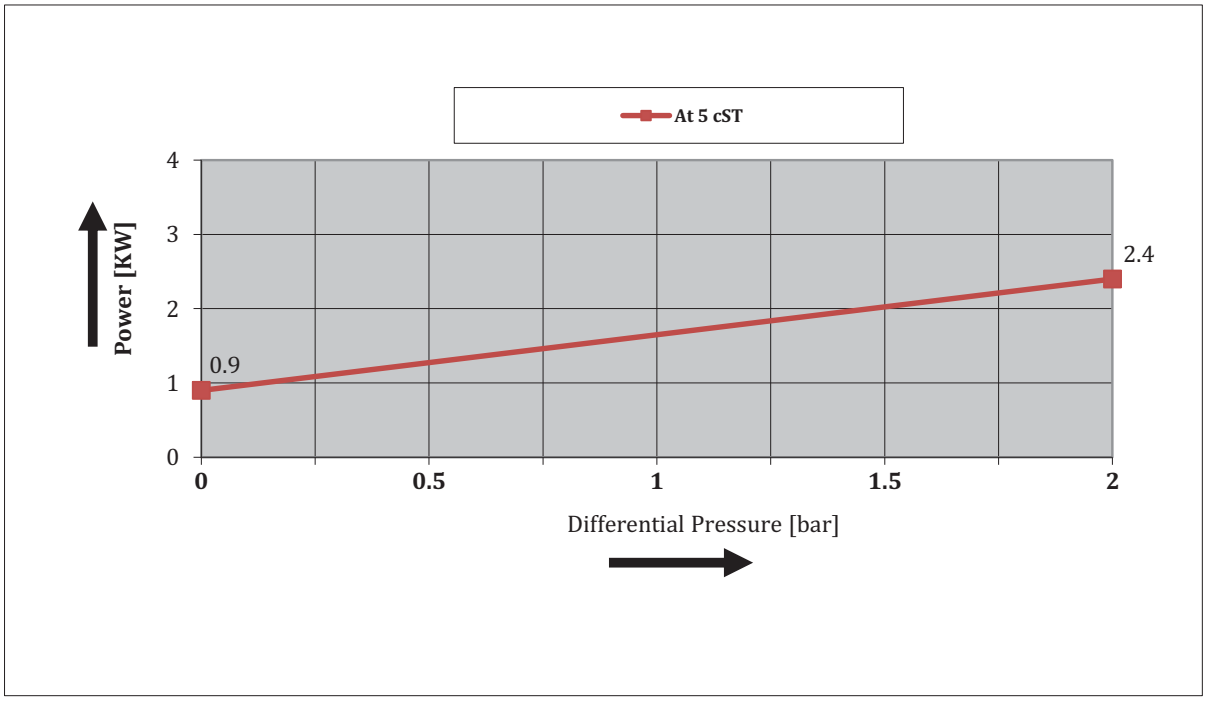

Made By
UT Pumps System Pvt. Ltd.
29-11-2018

UT PUMPS & SYSTEMS PVT. LTD. 14/7, Mathura Road, Faridabad- 121 003	PERFORMANCE CURVE 15 m3/hr. @ 2 bar PUMP MODEL : EH 1024	REV. 0	DATE 29-11-2018

Guaranteed parameters are with tolerances as per VDMA 24284 Gr -II CL II on plotted value

n : 300 RPM

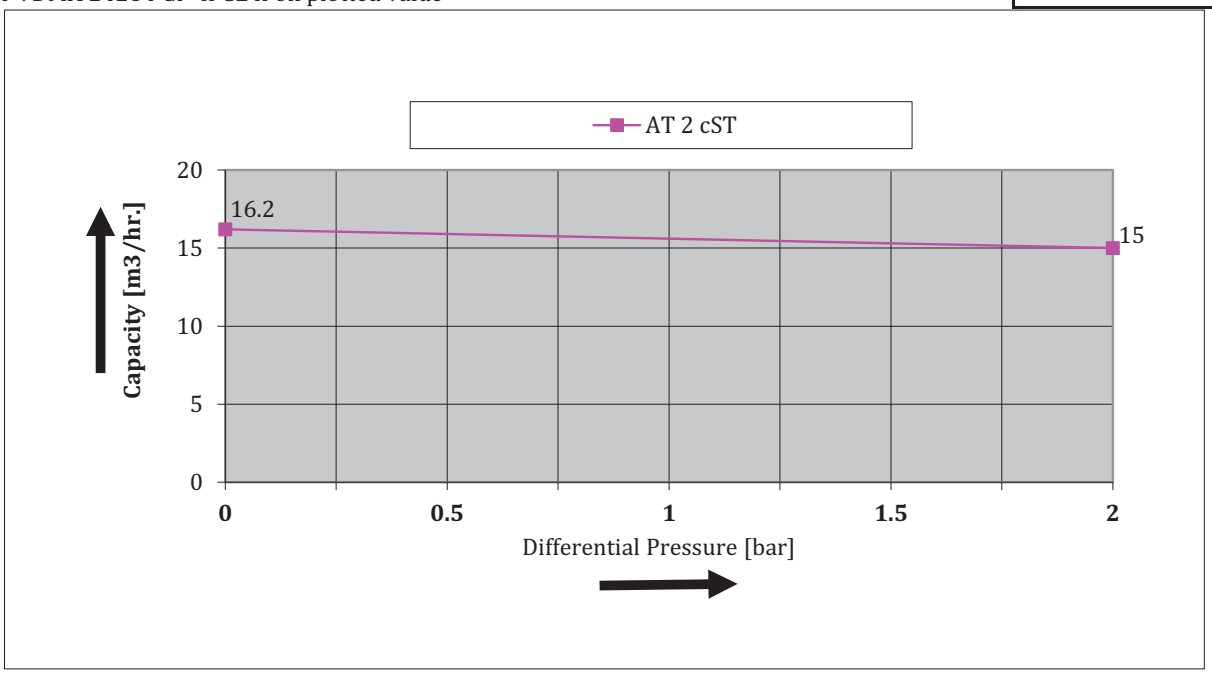

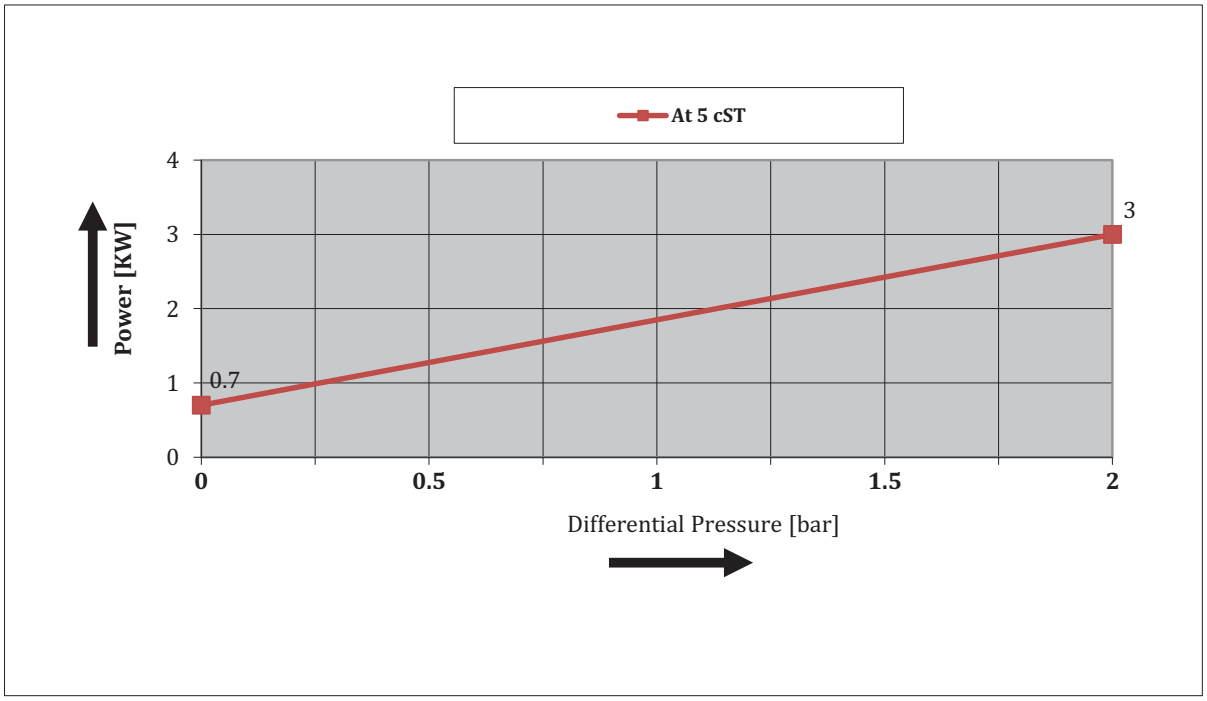

Made By
UT Pumps System Pvt. Ltd.
29-11-2018

UT PUMPS & SYSTEMS PVT. LTD. 14/7, Mathura Road, Faridabad- 121 003	PERFORMANCE CURVE 5 m3/hr. @ 2 bar PUMP MODEL : EH 375	REV. 0	DATE 29-11-2018

Guaranteed parameters are with tolerances as per VDMA 24284 Gr -II CL II on plotted value

n : 280 RPM

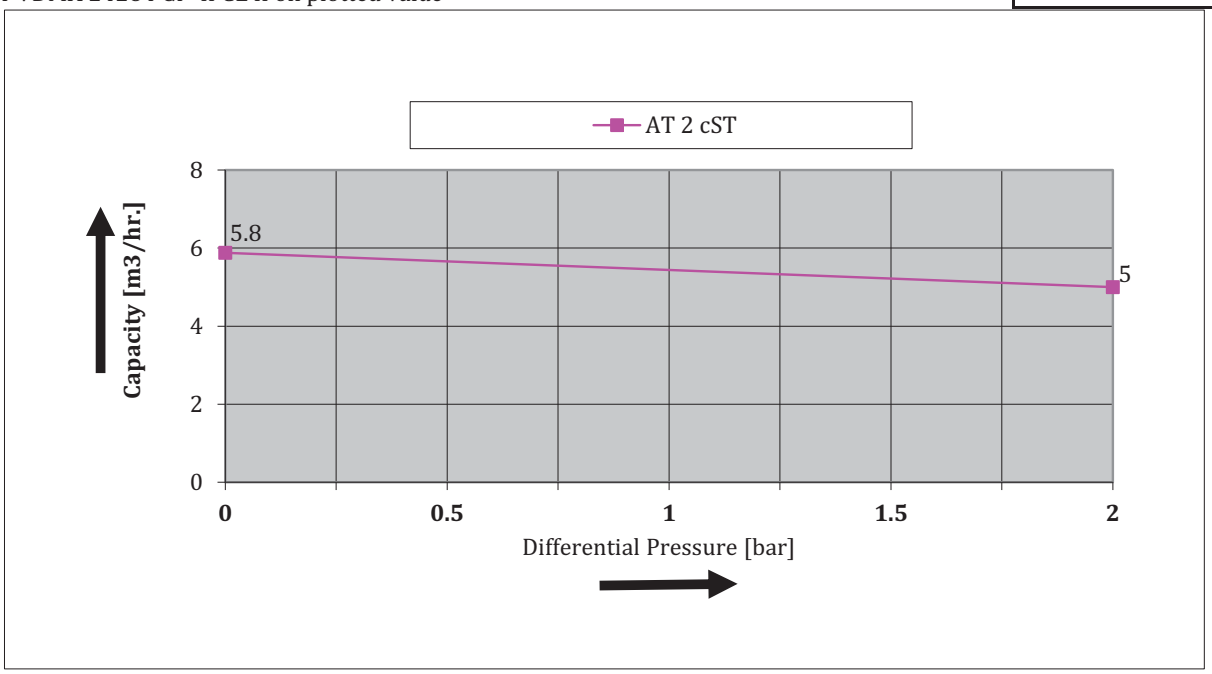

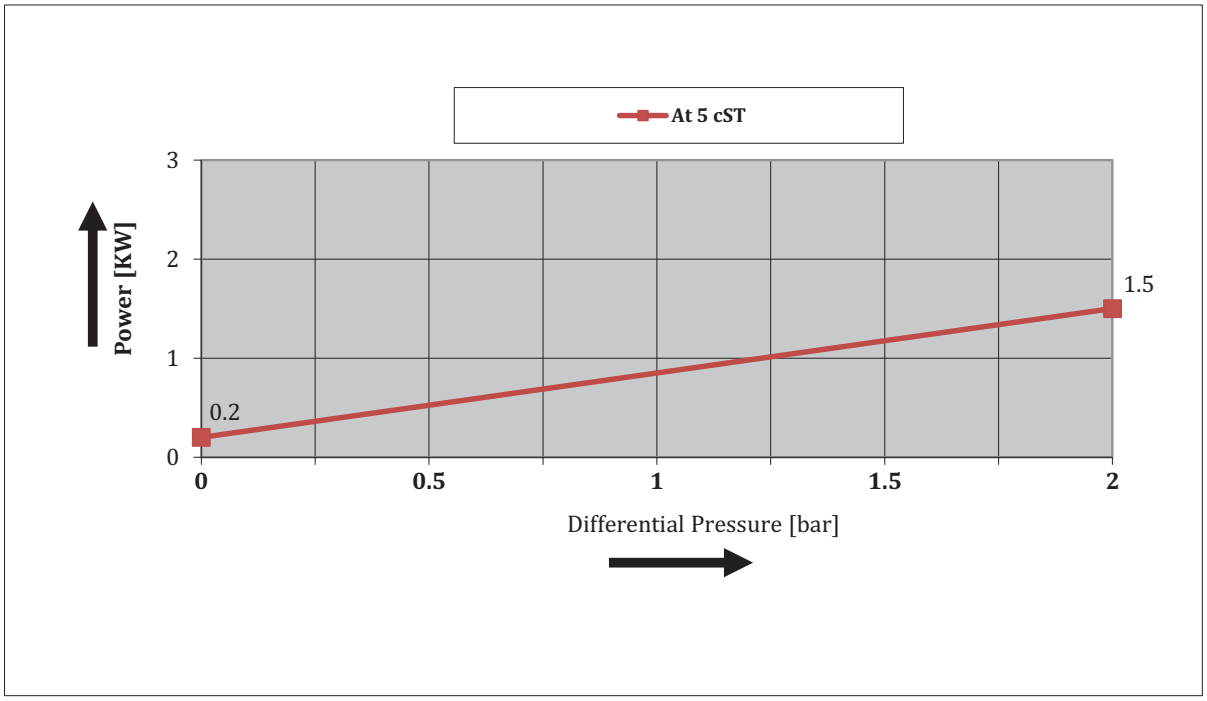

Made By
UT Pumps System Pvt. Ltd.
29-11-2018