2000 TPD BCGCL COAL TO AMMONIUM NITRATE - LSTK-1

TECHNICAL SPECIFICATION FOR INDUCED DRAFT COOLING TOWER

BOOK 1 OF 2

(MECHANICAL, ELECTRICAL AND C&I SPECIFICATION)

SPECIFICATION No. PE-TS-544-165-W001
REV NO. 01

BHARAT HEAVY ELECTRICALS LIMITED
POWER SECTOR
PROJECT ENGINEERING MANAGEMENT
NOIDA, INDIA

INDEX

SL NO.	DESCRIPTION	SHEET NO.
1	Project Information	3-6
2	Scope	7-10
3	General Technical Requirement	11-18
4	Specific Technical Requirement	
a)	Technical Data - Part - A (Mechanical)	19-24
b)	Mechanical specification	25-37
c)	Technical Data - Part - A (Electrical)	38-41
d)	Electrical Specification	42-99
e)	Technical Data - Part - A (C&I)	100-133
f)	Technical Data - Part - B (Supplier Data to be submitted after of contract)	134-143
g)	Compliance Drawings	144-147
5	Performance Guarantees to be Demonstrated at Site	148-165
6	Sub Vendor List	166-290
7	Quality Plan	291-336
8	Painting Requirement	337
9	Documentation Requirement	
a)	Documents Required Along With Bid By Bidders	338
b)	Documents to be submitted by Successful Bidder after award of contract along with submission schedule	338-342
c)	Documents To Be Submitted As Final/As-Built	342
10	Schedule of Performance Guarantees to be submitted along with Bid	343
11	Pre-Qualification Requirement (Technical)	345-358
12	Compliance Certificate	359

PROJECT INFORMATION

2. LOCATION AND BRIEF DESCRIPTION OF THE SITE

The proposed site for AMMONIUM NITRATE PLANT is in the vicinity of Mahanadi Coal Field, Lakhanpur. The project site is on coal bearing area and of open cast mining. It's a **pre-project activity for high ash coal-to-ammonium nitrate plant based on indigenously developed coal gasification technology**. This specification deals with the topographical survey works of the proposed plant area and preparation of Survey Report required for design & construction of the proposed project. Bharat Coal Gasification & Chemicals Limited (BCGCL) , a joint venture company of CIL and BHEL have entered into an agreement for setting up India's first commercial-scale Coal to ammonium nitrate plant through surface coal gasification (SCG) technology route the gasification plant will be based on developed coal gasification technology by BHEL, which utilised the high ash coal from Lakhanpur Area to produce 0.66 million metric tons per annum (MMTPA) of technical grade ammonium nitrate. A land of around 350 acre is readily available with the CIL and off-take of final product Ammonium Nitrate will be taken by CIL and will be used in explosive activity for mining of coal. This will be the first commercial Coal gasification plant that showcase the indigenously developed coal gasification technology developed by BHEL.

The latitude and longitude of project site area- 21.71811°N and 83.83961°respectively.

The site is located at about 16 kms from Belpahar town and 16.6 km from NH49 (Jharsuguda- Raigarh Road). Further, project site is located at about 36 km. from District headquarter Jharsuguda, located on NH 49. The nearest National Highway is NH-49, at about 16.6 km from the site. The nearest airport is Jharsuguda Airport, at about 37 km from the site. The site has access to the MCL, Lakhanpur through motorable village roads. The nearest rail head, Belpahar, on Jharsuguda-Raigarh Broad-Gauge (BG) Section of the South Eastern Railways is about 16 km at Belpahar town.

Most of the surveyed area is almost plain with some open area, road, drain, culvert, Laboratory, Houses, defunct railway line, Temple, cultivated land, trees etc. Southern part of the land parcel is close to the Hirakud Reservoir and is of Marshy land. The details are shown in the Topographical Drawing. We have found nos of Brick Factory in this area. Mostly developed ponds are due to Brick Factory. Ground level of the surveyed area is ranging from 208m to 228m from MSL.

HFL:

As per information gathered and following topography all around, the area is found to be a flood free upland. Hence no HFL information or marking was available in the surveyed area. Hirakud dam has the reservoir near to this site and its HFL is 190.5m (RL).

RAINFALL INTENSITY , AMBIENT PARAMETERS

Located at an elevation of 233.57 meters (766.31 feet) above sea level, Belpahar has a Tropical wet and dry or savanna climate (Classification: Aw). The district's yearly temperature is 30.41ºC (86.74ºF) and it is 4.44% higher than India's averages. Belpahar typically receives about 156.07 millimeters (6.14 inches) of precipitation and has 121.01 rainy days (33.15% of the time) annually.

Month	Jan	Feb	Mar	Apr	May	Jun	Jul	Aug	Sep	Nov	Oct	Dec	Year
Record high °C (°F) (AMBIENT TEMPERATURE)	35.0 (95.0)	40.0 (104.0)	46.0 (114.8)	51.0 (123.8)	52.0 (125.6)	49.0 (120.2)	41.0 (105.8)	38.0 (100.4)	38.0 (100.4)	37.0 (98.6)	34.0 (93.2)	33.0 (91.4)	52.0 (125.6)
Average high °C (°F) (AMBIENT TEMPERATURE)	28.49 (83.28)	32.68 (90.82)	37.25 (99.05)	41.65 (106.97)	43.45 (110.21)	38.91 (102.04)	33.15 (91.67)	32.19 (89.94)	32.57 (90.63)	32.21 (89.98)	30.62 (87.12)	28.07 (82.53)	34.27 (93.69)
Daily mean °C (°F) (AMBIENT TEMPERATURE)	23.38 (74.08)	27.68 (81.82)	32.74 (90.93)	37.37 (99.27)	39.42 (102.96)	35.82 (96.48)	30.78 (87.4)	29.75 (85.55)	29.82 (85.68)	28.65 (83.57)	26.28 (79.3)	23.27 (73.89)	30.41 (86.74)
Average low °C (°F) (AMBIENT TEMPERATURE)	14.93 (58.87)	17.94 (64.29)	21.7 (71.06)	25.87 (78.57)	28.84 (83.91)	28.93 (84.07)	26.37 (79.47)	25.34 (77.61)	24.75 (76.55)	22.33 (72.19)	18.62 (65.52)	15.45 (59.81)	22.59 (72.66)
Record low °C (°F) (AMBIENT TEMPERATURE)	10.0 (50.0)	13.0 (55.4)	16.0 (60.8)	19.0 (66.2)	21.0 (69.8)	22.0 (71.6)	22.0 (71.6)	20.0 (68.0)	21.0 (69.8)	16.0 (60.8)	13.0 (55.4)	9.0 (48.2)	9.0 (48.2)
Average precipitation mm (inches)	10.32 (0.41)	11.49 (0.45)	10.05 (0.4)	15.48 (0.61)	18.9 (0.74)	218.57 (8.61)	542.07 (21.34)	520.72 (20.5)	388.32 (15.29)	114.16 (4.49)	6.45 (0.25)	16.32 (0.64)	156.07 (6.14)
Average precipitation days (≥ 1.0 mm)	2.09	2.27	2.36	3.64	3.82	17.55	27.91	26.82	21.45	10.64	0.91	1.55	10.08
Average relative humidity (%)	45.06	37.99	28.96	27.02	31.29	49.88	72.33	77.74	75.55	65.27	53.52	50.09	51.23
Mean monthly sunshine hours	8.58	8.6	11.62	12.73	13.06	12.85	11.75	11.67	11.04	11.04	9.01	8.57	10.88

Maximum Relative Humidity = 86 %

METEOROLOGICAL ANALYSIS OF THE AREA

Meteorological data was collected from the nearby weather station. These parameters are essential for input in the AERMET module of AERMOD. From the input two type of files were generated, one is the wind rose diagram for the year and other was AERMET file which was used as an input file in the AERMOD. Cloud Cover (tenths), Dry Bulb Temp (°C), Relative Humidity (%), Station Pressure (mbar), Wind Direction (deg), Wind Speed (m s -1), Ceiling Height (m), Hourly Precipitation (1/100th of inch), Global Horizontal Radiation (Wh m-3) were taken as meteorological parameter for the study. The direction suggests the direction from which the wind blows. Figure below shows the Wind rose diagram for the data with 36 directions. Wind frequency

classification was also plotted. It shows percentage of wind with a different speed range. It also shows the time for which calm situation prevailed. The calm state prevailed for 34.17%. The average wind speed for the whole year was found to be 2.33 m s -1 . The predominant wind direction was North-Easterly to South-Westerly.

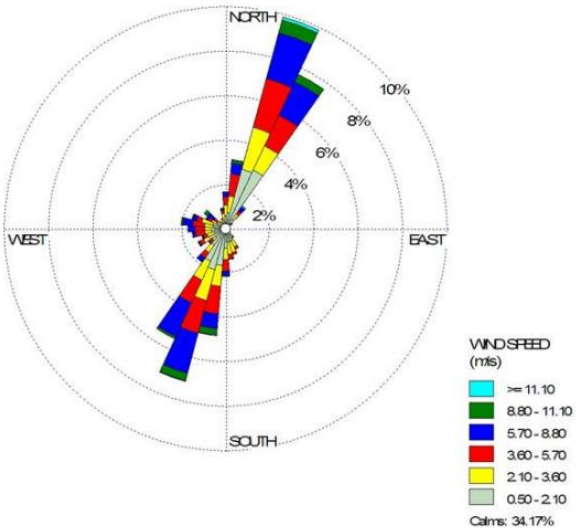

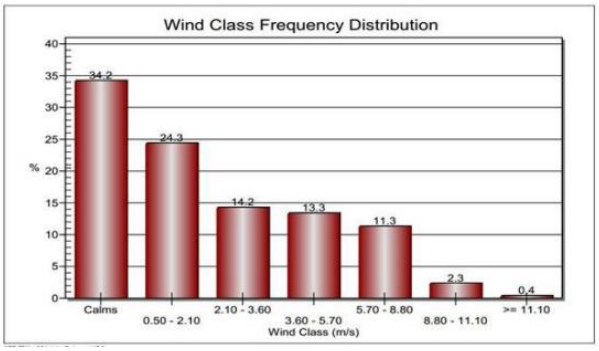

ATTACHMENT-A

Parameters	Temperature	Remarks
Dry Bulb (Summer)	Max. - 45 °C Min. – 19.9 °C	
Dry Bulb (Winter)	Max. – 35 °C Min. - 8.4 °C	
Wet Bulb Temperature	27.5 °C	

Rainfall	Value	Remark
Design rainfall (per hour)	421.7mm	

Relative Humidity	RH %	Remark
Relative Humidity, Minimum	40	
Relative Humidity, Maximum	86	
Relative Humidity, Average	74	

SCOPE of Supply and Services

Each Cooling Tower shall be complete with following:

This enquiry covers the complete cooling tower including design, manufacture, assembly, inspection and testing at manufacturer's and/or his sub-contractors works, proper packing, delivery at site, transportation, unloading/ handling at site, storage at site, erection, site painting, commissioning, performance guarantee testing of Induced draft cooling tower (IDCT) including all Mechanical, Electrical, C&I, Civil & Structural works for cooling tower, complete with hot water distribution system, cold water basin, outlet channels, sludge pit, staircase from ground level to deck, paving, etc. as specified & as necessary for completeness in all respects and for efficient & trouble free operation along with O&M spares (as applicable).

It is not the intent to specify herein all the details of design and manufacture. However, the equipment shall conform in all respects to high standards of design, engineering and workmanship, and shall be capable of performing the required duties in a manner acceptable to Engineer/Owner.

1	Complete packing / fill material and drift eliminators for cooling tower.
2	Complete Hot water Distribution System consisting of:-
2.1	Concrete encased CW pipes to carry hot water from BHEL's terminal point to cooling tower including its supporting arrangement.
2.2	Manually operated butterfly valve with open/close limit switch at inlet to each cell of cooling towers.
2.3	Hot water distribution systems along with water spray nozzles for cooling tower.
3	Design and fabrication of anchors, hangers and supports wherever required.
4	Drain sump and sludge disposal system for each cooling tower, including sludge sump, associated pipe work, Auto-coupling submersible type sludge pumps (minimum capacity 150 cum/hr and minimum head 40 MWC), valves, accessories and piping up to BHEL's terminal point. Suitable portable type tripod arrangement for handling of sump pumps to be considered in bidder's scope.
5	Inlet air louvers (if applicable) for cooling tower.
6	Complete air moving equipment consisting of fans, reduction gear unit, transmission equipment, lubricating system and electrical motors with rain hood arrangement etc.
7	Screens and Stop log gates along with guides embedded in concrete shall be provided at the outlet of cold water basin. The minimum thickness of skin plate shall be 8 mm. The structural design of the stop log gate shall generally conform to relevant IS codes. The gate shall be painted with corrosion resistant paint.
8	Handling arrangement with monorail and a chain operated hoist with a travelling trolley and chain pulley blocks for stoplogs, screens and sludge pumps along with accessories.
9	Mechanical and electrical equipment Handling system and maintenance facilities for drive system gear reducers, fans, motor for each cooling tower.
10	Cross over facility, as required, over hot water pipes as per layout requirement.
11	Provision of three numbers of Isolation (Gate valve) Valves (in the stub connections) at the locations (in purchaser's scope of Piping) where flow measurement is to be carried out by means of pitot tubes.

12	All steel / cast iron inserts, plates, bolts, nuts, sleeves etc. to be grouted in concrete work and used to hold/ support the equipment/ system being supplied and erected under this specifications.
13	Counter flanges, bolts, nuts & gaskets for all piping connections in the scope of bidders and also at terminal points.
14	Flushing lines with davit type valves in each branch at the end of hot water distribution pipes to enable removal of debris from the system at the start of commissioning.
15	Carrying out performance test of the Cooling Tower through CTI (Cooling Technology Institute-USA) / BCGCL approved /BHEL approved / listed testing agency.
16	The following are also included in bidder's scope:
16.1	One set of special tools & tackles required for maintenance of equipment & accessories in the cooling towers.
16.2	Various drawings, datasheets, calculation, test reports/ certificates, operation & maintenance manuals including "As built drawings" etc. as specified & as necessary.
16.3	Supply of first fill of lubricants for all equipment under this package including second fill/ replenishment as necessary after commissioning & handing over of the plant.
16.4	Supply of commissioning spares on as required basis.
16.5	Supply of O&M spares.
17	The items/equipment though not specifically mentioned but are needed to make the system/ plant complete shall also be furnished, erected, and commissioned unless otherwise specifically excluded.
18	**Exclusions from bidder's scope:**
18.1	DCS Panels for Complete Cooling Tower. However, LCP for Sludge pumps and any other equipment's (as required) shall remain in bidder's scope.
18.2	Vibration Monitoring system along with its cabling is in BHEL scope (bidder to provide the vibration pad and key notch for mounting of BHEL supplied VMS sensors / probes in their scope). However, all other accessories like cable trays are in bidders scope as per scope demarcation mentioned in Electrical Scope Split.
19	Cooling Tower MCCs and MCC Building shall be provided by BHEL near IDCT.
20	**Equipment & Services to be provided by Purchaser:**
20.1	Cement and Reinforcement Steel (Refer Terms and conditions for free issue items being given along with NIT)
20.2	Supply and erection of incoming hot water piping up to bidder's terminal point.
20.3	Chlorine di-oxide dosing to control biological/ algae (if required) is envisaged in purchaser's scope.
20.4	Cold-water outlet channel for cooling tower beyond the bidder's terminal point.
20.5	For Electrical, C&I and Civil works refer respective sub-sections.
21	**Terminal Points:**
21.1	Hot water header: Refer layout drawing Annexure-3.
21.2	Cold Water Outlet: Refer layout drawing Annexure-3.
21.3	Power Cables, Control cables and Screened control Cables: As per Electrical scope split.
21.4	Cable Trench/cable Tray: As per Electrical scope split.

PROJECT: 2000TPD COAL TO AMMONIUM NITRATE (LSTK-1)
PACKAGE : COOLING TOWER (INDUCED DRAFT)
SCOPE OF VENDOR: SUPPLY, CIVIL WORKS, ERECTION & COMMISSIONING OF VENDOR'S EQUIPMENT
PROJECT :

S.NO	DETAILS	SCOPE SUPPLY	SCOPE E&C	REMARKS
1	415V MCC	BHEL	BHEL	240 V AC (supply feeder)/415 V AC (3 PHASE 4 WIRE) supply shall be provided by BHEL based on load data provided by vendor at contract stage for all equipment supplied by vendor as part of contract.
2	Local Push Button Station (for motors)	BHEL	BHEL	Located near the motor.
3	Power cables, control cables and screened control cables for a) both end equipment in BHEL's scope b) both end equipment in vendor's scope c) one end equipment in vendor's scope	 BHEL BHEL BHEL	 BHEL Vendor BHEL	1. For 3.b) & c): Sizes of cables required shall be informed by vendor at contract stage (based on inputs provided by BHEL) in the form of cable listing. Finalisation of cable sizes shall be done by BHEL. Vendor shall provide lugs & glands accordingly. 2. Termination at BHEL equipment terminals by BHEL. 3. Termination at Vendor equipment terminals by Vendor.
4	Junction box for control & instrumentation cable	Vendor	Vendor	Number of Junction Boxes shall be sufficient and positioned in the field to minimize local cabling (max 10-12 mtrs) and trunk cable.
5	Cabling material (Cable trays, accessories & cable tray supporting system)	Vendor	Vendor	1. Layout details between vendors supplied equipment & installation dwgs by vendor. 2. BHEL will provide cable trench/cable racks/cable padestals along with cabling material up to the terminal point approx. 10 m away from cooling tower. Further cabling (supply and E&C) shall be in vendor's scope.
6	Cable glands ,lugs, and bimetallic strip for equipment supplied by Vendor	Vendor	Vendor	1. Double compression Ni-Cr plated brass cable glands 2. Solder less crimping type heavy duty Lugs. Aluminium lugs/ ferrules shall be used for Aluminium cables and Copper lugs/ferrules shall be used for Copper cables. Bimetallic washers or bimetallic type lugs shall be used for bimetallic connections.
7	Equipment grounding (including electronic earthing) & lightning protection	Vendor	Vendor	Material and sizes shall be as per specification and subject to BHEL approval during detailed engineering stage. Refer note no. 4 for electronic earthing.
8	Below grade grounding	BHEL	Vendor	MS Rod material shall be provided by BHEL. All other materials/ consumables are in vendor's scope.

PROJECT: 2000TPD COAL TO AMMONIUM NITRATE (LSTK-1)
PACKAGE : COOLING TOWER (INDUCED DRAFT)
SCOPE OF VENDOR: SUPPLY, CIVIL WORKS, ERECTION & COMMISSIONING OF VENDOR'S EQUIPMENT

S.NO	DETAILS	SCOPE SUPPLY	SCOPE E&C	REMARKS
9	LV Motors with base plate and foundation hardware	Vendor	Vendor	Makes shall be subject to customer/ BHEL approval at contract stage.
10	Lighting System	Vendor	Vendor	In addition to other lighting system items, vendor shall consider Lighting panels (LP) with timer control as per requirement. Further wires, any other material required for lighting system shall also be considered by vendor in their scope. **BHEL will provide the power supply along with LDB at one location near Cooling Tower for feeding cooling tower vendor LPs/other lighting loads. Further distribution including material is in vendor scope.**
11	Any other equipment/ material/ service required for completeness of system based on system offered by the vendor (to ensure trouble free and efficient operation of the system).	Vendor	Vendor	

NOTES:

1. Make of all electrical equipment/ items supplied shall be reputed make & shall be subject to approval of BHEL/customer after award of contract without any commercial implication.
2. All QPs shall be subject to approval of BHEL/customer after award of contract without any commercial implication.
3. In case the requirement of Junction Box arises on account of Power Cable size mis-match due to vendor engineering at later stage, vendor shall supply the Junction Box for suitable termination.
4. Vendor shall indicate location of Electronic Earth pit in their civil assignment drawing.

	GENERAL TECHNICAL REQUIREMENT
1	The equipment shall comply with all applicable safety codes and statutory regulations of India where the equipment is to be installed.
2	The design, manufacture, inspection & testing and performance of Cooling Tower complete with all accessories, shall generally conform to the latest editions of the appropriate standards.
3	Latest codes and standards shall be applicable as on date of bid submission.
4	In the event of any conflict between the requirements of two clauses of this specification, documents or requirements of different codes and standards specified, stringent requirement as per the interpretation of the BHEL / owner shall apply.
5	Bidder to note that drawing/document submission shall be through web based Document Management System. Bidder would be provided access to the DMS for drg/doc submissions and adequate training for the same. Bidder to ensure proper net connectivity at their end.
6	The first revision drawings/ documents submitted by vendor shall be complete in all respects. Any incomplete drawing submitted shall be treated as non- submission with delays attributable to vendor's account. For any clarification/ discussion required to complete the drawings, the bidder shall himself depute his personal to BHEL / Customer's place as per the requirement for across the table submissions / discussions/ finalizations of drawings.
7	Drawing / documents to be submitted by bidder shall be as per "Documentation Requirement" given in this specification.
8	The scope of supply/ works including civil works as complete turnkey package includes complete civil works between the terminal points which are stated or unstated but required as per the system requirements except for items specifically mentioned in exclusion list of works.
9	Scope of works includes preparation of design and drawings, obtaining necessary approvals, materials, execution as per codes, specification, best engineering practices and to the satisfaction of BHEL/ Owner for all mechanical, architectural, civil structural, building electrification, etc. BHEL will not bear any liability for any extra work, which might not have been perceived by the bidder but functionally required. The cost of such work will be entirely borne by the bidder.
10	The omission of specific reference to any component / accessory which is necessary for completion of the system and for the proper performance of the equipment / Cooling Tower shall not relieve the bidder of the responsibility of providing such facilities to complete the supply / erection / commissioning etc. of Cooling Tower and its drives at quoted prices. In case this is not clear to bidder, the bidder may seek clarifications to same, failing which the specification intent shall be binding on bidder.
12	Bidder shall visit and apprise himself fully with existing site conditions including soil condition, rainfall data, availability of all construction materials including backfill, graded material etc. and other aspects for construction of plant, building structures etc. No extra claim whatsoever on any account shall be entertained by BHEL.

13	The materials of construction for various components specified are the minimum requirements. Superior materials suitable for fluid handled is also acceptable subject to Customer/BHEL approval. Materials of construction for other components not specified shall be similarly selected by the bidder for the intended duty and subject to Customer/BHEL approval.
14	Cost of Piling (if any) shall be included by bidder's in their quoted price.
15	The quality of water in CW system shall be Circulating Water (with COC 5). Water analysis is enclosed in 'Compliance drgs'.
16	The location, orientation, wind rose, scope demarcation etc. for the cooling tower shall be as per the sketch enclosed in 'Compliance drgs' as Annexure-3.
17	Size of Branch & Cell isolation Butterfly Valves shall be same as that of pipe size.
18	The sizing of the hot water distribution system shall be done by limiting the velocity through the pipes to a maximum of 2.0 m/sec.
19	Piping upto 150 NB shall be carbon steel as per IS-1239 'HEAVY' Grade.
20	Piping 200 NB & above shall be Carbon steel rolled and Welded as per IS 3589 from CS plates as per IS:2062.
21	Minimum pipe thickness for overground piping shall be as follows: • 5.4 mm for pipe size upto 150 NB • 6.0 mm for pipe size from 200 NB and upto 600 NB • 7.0 mm for Pipe size 700 NB • 8.0 mm for pipe size 800 NB • 10 mm for Pipe size 900 NB to 1100 NB • 12 mm for pipe size 1200 NB • 12.5 mm for pipe size for 1400 NB • 16 mm for pipe sizes from 1600NB to 1800NB • 20 mm for pipe size for 2000 NB • 20 mm for pipe size for 2200 NB • 20 mm for pipe size from 2200 NB upto 2500 NB All pipes shall be adequately supported.
22	Burried CW pipe in Bidder's scope shall be concrete encased. Concrete encasement shall be of min 500 mm thick with square shape outside. M20 grade PCC encasement shall be provided other than locations of duct crossing road, rail or any other facility where RCC encasement of grade M25 shall be adopted. Minimum two layers of reinforcement (On both faces) of 12 mm diameter bars @ 200 mm c/c shall be provided for RCC encasement of CW Duct. Top of CW duct encasement shall be min. 1.5 m below FGL.

23	The minimum thickness of concrete encased steel pipes shall be as follows including corrosion tolerance of 2 mm: • Below 1800 mm dia. - As per thickness of above ground piping indicated above. • For pipes above 1800 mm upto and including 2500 mm dia. - 14 mm However, for concrete encased steel pipes running below rail/road, minimum thickness of CW pipe shall be 20 mm.
24	Following shall be considered for design of C.W. concrete encased CW Pipes: (a) Maximum design water pressure 10.0 Kg / Sq.cm (g) (b) Surge or water hammer pressure of 10.0 Kg / Sq.cm. (c) Vacuum of 0.1 kg/cm² (abs). (d) Soil overburden (e) Surcharge Pressure of 2T/Sq.m (f) The effect of concrete encasement shall not be considered in the design of CW duct.
25	The completed pipe shall be tested for water tightness, for the pressure equal to twice the working pressure or 1.5 times the design pressure whichever is higher and shall be generally water tight to BHEL/BCGCL's satisfaction. The testing pressure shall be held for minimum period of 30 minutes without any signs of leakage or failure of weld. Any in flow / leakage of water from the duct shall be sealed / repaired at Contractor's cost. However, tests in part of length of duct may be permitted with prior approval only.
26	Wherever required anchor / thrust blocks shall be provided with RCC M25 grade concrete.
27	Drain and vents shall be provided by Bidder in their scope of pipe work along with isolation valves and fittings as per actual layout requirement.
28	Under each valve, flange joint & such other items prone to gland/ joint leakage, suitable trays/ channels shall be provided so that any leakage water does not spread on the surroundings. This is also applicable for any air release valve that has to be mounted on hot water riser top. Erection of such air release valves is also to be done by the bidder.
29	The hot water distribution piping and valves shall be designed for the design pressure as indicated in the Technical Data Part-A.
30	Manual operated B.F. valves with open/close limit switch shall be provided in hot water distribution piping such that each cell can be isolated without affecting the operation of other cells.
31	Special tools & tackles, if any, shall be included in scope of supply by the bidder. A list giving description of such tools & tackles shall be furnished by vendor.
32	The Cooling Tower shall be designed for continuous operation to cool not less than the design flow of water from specified inlet temperature to outlet temperature at a design ambient wet bulb temperature.
33	All the components shall be capable of safe, proper and continuous operation at all cooling water flows upto and including those specified under Technical Data Part-A and shall be designed with regard to ease of maintenance, repair, cleaning and inspection.

34	No wood/ timberwork shall be used in any component of the cooling tower.
35	The Cooling Tower structure shall be of adequate strength to withstand the wind load and the effect of earthquake on the structure. Design wind pressure and horizontal / vertical seismic coefficient shall be taken as mentioned in the specification for civil works enclosed to this specification.
36	All parts subjected to periodical maintenance & inspection such as Inlet louvers (if applicable), fills, drift eliminators etc. shall be readily accessible.
37	For review/approval of drawings, bidder shall depute its concerned personnel for across the table finalization of drgs/docs at BHEL/owner's office, as and when required. No price shall be admissible to bidder for same and bidder's offer shall be considered inclusive of the same.
38	It is mandatory for the bidder to submit along with the bid, the deviations if any – whether major or minor in the schedule of deviations only. In the absence of deviations listed in the "Schedule of deviations, the offer shall be deemed to be full conformity with the specification, "not-withstanding" anything else stated elsewhere in bidder's offer. The implied/indirect deviations shall not be binding on the purchaser.
39	Bidder may note the thermal calculations must be enclosed with the offer. In case these calculations are based on the collaborator's design then these calculations should be duly vetted by his collaborator. The bidder shall show, explain and prove the validity of the basis, procedures and methods used in these calculations.
40	The spares provided shall be suitably protected, coated, covered or boxed and crated to prevent damage or deterioration during handling/storage at site till the time of erection/usage.
41	The Contractor shall guarantee the long term availability of spares to BCGCL for the full life of the equipment covered under the contract. The Contractor shall guarantee that before going out of production of spares parts of the equipment covered under the Contract, he shall give the Employer atleast 2 years advance notice so that the latter may order his bulk requirement of spares, if he so desires. The same provision will also be applicable to sub-contractors. Further, in case of discontinuance of manufacture of any spares by the Contractor and/or his sub contractors, Contractor will provide the Employers, two years in advance, with full manufacturing drawings, material specifications and technical information including information on alternative equivalent makes required by the Employer for the purpose of manufacture/ procurement of such items.
42.1	Bidder to note that all sub vendors shall be subject to BHEL/ Customer approval in the event of order.
42.2	The interpretation of any technical specification clause, requirement, or provision within this document shall rest solely with BHEL. The decision and interpretation made by BHEL shall be deemed final and binding on bidder without exception.
42.3	Irrespective of the type of cooling tower (i.e. RCC/FRP cooling tower) , each riser pipe of Cooling Tower shall be connected to the Cooling Tower through a rubber expansion joint of the diameter same as that of the riser pipe and meeting the requirement of REJ as specified elsewhere in this specification. Rubber expansion joint is in Bidder scope.

43	**BUTTERFLY VALVES:**
43.1	All valves shall have indicators or direction clearly marked on the hand-wheel so that the valves opening/closing can be readily determined.
43.2	Special attention shall be given to operating mechanism for large size valves with a view to obtaining quick and easy operation ensuring that a minimum of maintenance is required.
43.3	The actuator-operated valves (as applicable) shall be designed on the basis of the following:
43.3.1	The internal parts shall be suitable to support the pressure caused by the actuators.
43.3.2	The valve actuator unit shall be suitably stiff so as not to cause vibrations, misalignments, etc.
43.3.3	All actuator-operated valves shall be provided with hand operated gearing mechanism also.
43.3.4	All actuators operated valves shall open/ close fully within time required by the process.
43.4	All valves shall be provided with embossed name plate giving details such as tag number, type, size etc.
43.5	Wherever required valves shall be provided with chain operator, extension spindles and floor stands or any other arrangement approved by BCGCL/BHEL so that they can be operated with ease from the nearest operating floor. Wherever necessary for safety purpose locking device shall be provided. Further, necessary small platforms for facilitating easy valve operation shall be provided by the contractor wherever necessary in consultation with BCGCL/ BHEL site engineer.
43.6	The valves shall be designed for the design pressure/temperature as indicated in Technical data Part-A and in accordance with AWWA-C-504, EN-593 or any other approved equivalent standard latest edition.
43.7	The valves shall be suitable for installation in any position (horizontal/vertical etc.) and shall be generally of double-flanged construction. However, for sizes 600 NB and below the valves of Wafer construction are also acceptable.
43.8	Valves-350Nb and above shall have pressure equalizing bypass valves, wherever system parameters warrant the same.
43.9	Valves-200Nb and above shall also be provided with gear operator arrangement as a standard practice suitable for manual operation. Manual operation of valve shall be through gear arrangement having totally enclosed gearing with hand wheel diameter and gear ratio designed to meet the required operating torque. It shall be designed to hold the valve disc in intermediate position between full open and full closed position without creeping or fluttering. Adjustable stops shall be provided to prevent over travel in either direction.
43.10	Limit and torque switches (if applicable) shall be enclosed in watertight enclosures along with suitable space heaters for motor actuated valves, which may be either for On-Off operation or inching operation with position transmitter.

44	**RUBBER EXPANSION JOINTS**
44.1	All parts of expansion joints shall be suitably designed for all stresses that may occur during continuous operation and for any additional stresses that may occur during installation and also during transient condition.
44.2	The expansion joints shall be single bellow rubber expansion joints. The arches of the expansion joints shall be filled with soft rubber.
44.3	The tube (i.e. inner cover) and the cover (outer) shall be made of natural or synthetic rubber of adequate hardness. The shore hardness shall not be less than 60 deg. A for outer and 50 deg. A for inner cover.
44.4	The carcass between the tube and the cover shall be made of high quality cotton duck, preferably, square woven to provide equal strength in both directions of the weave. The fabric plies shall be impregnated with age resistant rubber or synthetic compound and laminated into a unit.
44.5	Reinforcement, consisting of solid metal rings embedded in carcass shall be provided.
44.6	Expansion joints shall be complete with stretcher bolt assembly. The expansion joints shall be suitable to absorb piping movements and accommodate mismatch between pipe lines.
44.7	The expansion joints shall be of heavy duty construction made of high grade abrasion resistant natural or synthetic rubber compound. The basic fabric for the 'duck' shall be either a superior quality braided cotton or synthetic fiber having maximum flexibility and non-set characteristic.
44.8	The expansion joints shall be adequately reinforced, with solid steel rings, to meet the service conditions under which they are to operate.
44.9	All expansion joints shall be provided with IS 2062 Gr E-250B galvanized steel retaining rings for use on the inner face of the rubber flanges, to prevent any possibility of damage to the rubber when the bolts are tightened. These rings shall be split and beveled type for easy installation and replacement and shall be drilled to match the drilling on the end rubber flanges and shall be in two or more pieces.
44.10	The expansion joints shall have integral fabric reinforced full-face rubber flanges. The bolt on one flange shall have no eccentricity in relation to the corresponding bolt hole on the flange on the other face. The end rubber flanges shall be drilled to suit the companion pipe flanges. The flanges shall be as per ANSI B 16.5. For higher sizes, not covered under ANSI B 16.5, the same shall be as per AWWA.
44.11	All exposed surfaces of the expansion joint shall be given a 3 mm thick coating of neoprene. This surface shall be reasonably uniform and free from any blisters, porosity and other surface defects.
44.12	Each control unit shall consist of two (2) numbers of triangular stretcher bolt plates, a stretcher bolt with washers, nuts, and lock nuts. Each plate shall be drilled with three holes, two for fixing the plate on to the companion steel flange and the third for fixing the stretcher bolt.
44.13	Each joint shall have a permanently attached brass or stainless-steel metal tag indicating the tag numbers and other salient design features.
45	**CLEANING AND FLUSHING OF PIPES:**

45.1	All piping shall be cleaned by the Bidder before and after erection to remove grease, dirt, dust, scale and welding slag.
45.1	Before erection all pipe work, assemblies, sub-assemblies, fittings, and components, etc. shall be thoroughly cleaned internally and externally by blast cleaning or by power driven wire brushes and followed by air-blowing. The brushes shall be of the same or similar material as the metal being cleaned.
45.1	After erection, all water lines shall be mass flushed with water. The cleaning velocities in water lines shall be 1.2-1.5 times the operating velocities in the pipelines.
46	**ELECTRICAL: Please refer electrical portion.**
47	**CONTROL AND INSTRUMENTATION: Please refer C&I portion.**
48	All the first fill and one year's topping requirement of consumables such as greases, oils, lubricants, servo fluids / control fluids etc. which will be required to put the equipment covered under the scope of specifications into successful commissioning / initial operation and to establish completion of facilities shall be supplied by the contractor. Suitable standard lubricants as available in India are desired. Efforts should be made to limit the variety of lubricants to minimum.
49	FRP tower shall be with proper sealing/isolation between cells to avoid short circuiting of air between adjacent cells of Cooling Tower and ensure that there is no reverse rotation of fan.
50	**3D MODEL REQUIREMENT:**
50.1	Supply of 3D model of IDCT package: Bidder to provide complete 3D model (with attributes) of IDCT package in the following file formats: 1..IFC 2..DGN 3..DXF 4..DWG 5..SDNF

51	**BID EVALUATION CRITERIA:**
51.1	The bids shall be evaluated based on the Cooling Tower prices quoted by the bidder and quantity of Cement and reinforcement steel used in Cooling Tower.
51.2	Bidder shall furnish the quantity of Cement and reinforcement steel in the Price offer. The evaluation rate for Cement and reinforcement steel shall be as per the rates given in the Price Schedule/NIT.
51.3	During civil design while furnishing the drawing/ design for BHEL's review / approval, bidder shall also furnish the design quantities of Cement and reinforcement steel in the drawings.
51.4	If the total quantity of Cement and reinforcement steel during contract execution is found to be more than the quantities quoted at tender stage, the additional cost for excess quantity of Cement, reinforcement steel and Structural steel shall be deducted from the bidder's payments as per the rates, terms & conditions specified in the NIT.

	TECHNICAL SPECIFICATION INDUCED DRAFT COOLING TOWER 2000 TPD BCGCL COAL TO AMMONIUM NITRATE - LSTK-1	PE-TS-544-165-W001 Rev. No. 01 03.08.2026

TECHNICAL DATA - PART - A (MECHANICAL)			
SL.NO	**DESCRIPTION**	**UOM**	**DETAIL**
1.0	**DESIGN CODES & STANDARDS**		
1.1	Acceptance Test Code for Industrial Water Cooling tower.		Cooling Tower Institution of USA, Bulletin ATP-105
1.2	Performance Test Code for Atmospheric Water Cooling equipment.		PTC-23:ASME
1.3	Specification for Water Cooling Towers.		BS-4485.
1.4	Design of FRP components of cooling tower		CTI STD- 131 and CTI ESG-152.
1.5	Fiberglass Pultruded Structural Products for use in Cooling Towers		CTI STD-137
1.6	Structural Design of FRP components		CTI STD-152
1.7	Practice for Classifying Visual Defects in Thermosetting Reinforced Plastic Pultruded Products.		ASTM D-4385
1.8	Practice for Classifying Reinforced Plastic Pultruded Shapes According to Composition.		ASTM D-3647
1.9	Specification for Dimensional Tolerance of Thermosetting Glass-Reinforced Plastic Putlruded Shapes.		ASTM D-3917
1.10	Definitions of Terms Relating to Reinforced Plastic Pultruded Products.		ASTM D-3918
1.11	Property of PVC/PP fill		CTI 136: 2010
1.12	Thermo-Hydraulic Design of Induced Draught Counterflow Cooling Towers — Guidelines		IS 18758 : 2024
2.0	**DESIGN /SYSTEM PARAMETERS FOR EACH COOLING TOWER**		
2.1	No. of Cooling Towers required	Nos.	One (01) no. for station
2.2	Duty	-	Continuous
2.3	Type	-	RCC/FRP Induced draught Cooling tower
2.4	Air & Water Flow pattern	-	Counter Flow
2.5	Fill Type	-	Splash/Modular/Trickle
2.6	Design Cooling water flow	M3/hr	25000
2.7	Design Ambient Wet bulb temp	Deg C	27.5
2.8	Recirculation allowance	Deg C	0.6
2.9	Design Inlet wet bulb temp	Deg C	28.1
2.10	Design Cold water temperature	Deg C	33

2.11	Hot water inlet temperature	Deg C	43.2
2.12	Cooling Range	Deg C	10.2
2.13	Design Ambient Relative Humidity	%	74
2.14	Contribution of rain and spray zone to be considered in thermal design of tower		NIL
2.15	Liquid Handled	-	CW (Circulating Water with COC 5) (For CW water quality refer Annexure-1)
2.16	Maximum IDCT Pumping head permissible, viz. static head plus frictional losses as below: - Static head w.r.t. FGL - Frictional losses within bidder's T.P. with 10% margin	MWC	20.0
2.17	Maximum limit on total power consumption per cooling tower for the cooling tower fans at fan motor inlet terminals	KW	850
2.18	No. of working Cells	Number	As per bidder's design
2.19	No. of spare Cells	Number	One (1)
2.20	Evaporation loss.	%	Bidder to inform
2.21	Maximum permissible drift loss	%	0.001
2.22	Design pressure for hot water distribution system	kg / cm2(g)	10
2.23	Maximum permissible Cooling Tower Plan dimensions at 'FGL' (Excluding staircase & pavement)	M x M	Refer layout drawing Annexure-3.
2.24	Minimum Fill Plan area (including standby cells)	SqM	As per bidder's design
2.25	Maximum Cooling tower flow capacity to be considered for design of hot water distribution and cold water channel	%	120
2.26	Finished ground level (FGL)	M	EL 0.0 M (RL 218.0 M)
2.27	Maximum water level	M	EL 0.0 M (RL 218.0 M)
2.28	Normal Water Level	M	EL (-) 0.5 M (RL 217.5 M)
2.29	Min. Water level	M	EL (-) 1.0 M (RL 217.0 M)
2.30	Min. Free board above Maximum water level	M	0.3 M
2.31	Invert level of CT Basin	M	EL (-) 1.5 M (RL 216.5 M)

2.32	Depth of Sludge pit	M	At least 2m x 2m plan area and minimum 2.5m deep
2.33	Submersible Type sludge pumps	No.	2 nos. Sludge Sump (of min cap 150 cub M/ Hr.)
2.34	Number of sludge pits	No.	One
2.35	Number of cold water outlet channels		One no. CW Cold water outlet channel & shall match with Purchaser's channel at TP (Annexure-2)
2.36	Number of screens and gates in common outlet channel/Basin each) (Minimum)	No.	One (1)
2.37	Maximum allowable effective velocity through Cold water Outlet Channel	M/sec	1
3.0	**CONSTRUCTION FEATURES FOR EACH COOLING TOWER (REFER ANNEXURE -S1 FOR DETAILS)**		
3.1	Whether fan blades to have adjustable pitch		Yes
3.2	Whether fills are easily installable & removable		Yes
3.3	Fills supported by nailing acceptable		No
3.4	Type of Gear box		Spiral bevel or Worm type.
3.5	Gear box service factor (minimum) on motor rating		3
3.6	Factor of Safety for drive Shaft over the torque to be transmitted at design duty (minimum)		2
3.7	Fan Motor rating Selection		Fan motor shall have atleast 10% margin over the maximum power requirement of fan when the fan is operating at its test block condition and at 50 deg. C ambient temperature as required at gear box input end.
3.8	Minimum clear space required between any two fan stacks on adjacent cells	M	1.5
3.9	Min. clear corridor width required all along the cooling tower roof for equipment handling	M	2
3.10	Required number of stair cases from ground level to cooling tower fan deck	Nos.	Two(2) viz. one at each end.
4.0	**Material of construction (REFER ANNEXURE -S1 FOR DETAILS)**		
4.1	**For RCC Induced Draught Cooling tower**		
4.1.1	Cold water basin, outlet channel/ sump & sludge pit.		R.C.C.

4.1.2	Casing & Superstructure		R.C.C
4.1.3	Cell partition walls		Precast solid concrete blocks with provision of pilasters for walls, if required
4.1.4	Cooling tower roof (top deck)		R.C.C
4.1.5	Fan Cylinder/ recovery stack		R.C.C / Pultruded FRP / GRP
4.1.6	Staircase		R.C.C
4.1.7	Supporting structures		R.C.C.
4.1.8	Hot water basin for cross flow cooling tower		R.C.C.
4.2	**For FRP Induced Draught Cooling tower**		
4.2.1	Cold water basin, outlet channel/ sump & sludge pit.		R.C.C.
4.2.2	Casing & Superstructure		Pultruded FRP
4.2.3	Cell partition walls		Pultruded FRP
4.2.4	Cooling tower roof (top deck)		Pultruded FRP
4.2.5	Fan Cylinder/ recovery stack		Pultruded FRP / GRP
4.2.6	Staircase		Pultruded FRP
4.2.7	Hand rails at deck Level		Pultruded FRP
4.2.8	Supporting structures		Pultruded FRP
4.2.9	Hot water basin for cross flow cooling tower		Pultruded FRP
4.3	Hot water distribution nozzles		PP/PVC
4.4	Hot water distribution pipes for counter flow cooling tower		PVC (IS 4985 Class 3)
4.5	Carbon /Mild steel parts or structures used in Cooling Tower or its vicinity		Heavily galvanized (610 gm/ sq.m) in accordance with IS: 2629 with corrosion resistant protective coating Surface preparation in accordance with IS:6129.
4.6	Hand rail		As per civil specification (Book 2 of 2)
4.7	Fills		UV stabilized virgin PVC/PP
4.8	Fill support		SS:316 grid
4.9	Louvers		Bidder’s proven practice
4.10	Drift eliminators		PVC (UV Stablised)

4.11	Fan blades		FRP
4.12	Fan hub		Heavily Galvanised M.Steel
4.13	Gears		Alloy Steel/ Equivalent
4.14	Gearbox and fan hub supporting structure		heavily Galvanised M. Steel
4.15	Fan drive shaft		Stainless conforming AISI-304 /Carbon fibre composite material with SS 304 couplings
4.16	Fan drive shaft coupling		Stainless conforming AISI-304
4.17	Bolts, nuts etc. for fan blades		SS-316
4.18.1	BF Valves - Body & disc (Design as per AWWA-C-504)		ASTM A48, Gr. 40 with 2% Ni / IS: 210. Gr. FG-260, with 2% Ni/ SG iron BSEN 1563, Gr. EN GJS-400-15 with 2% Ni and epoxy coated. Fabricated steel (IS: 2062 GR. E-250B) butterfly valves instead of cast iron body valves are also acceptable for size above 300 mm Nb diameter.
4.18.2	BF Valves - Shaft		BS 970 431 S: 291 / EN 57, or SS 410 Test pressure & duration shall comply with AWWA C504.
4.18.3	BF Valves - Seat ring		18-8 Stainless steel
4.18.4	BF Valves - Seal		Nitrile Rubber
4.19	Other Valves		Body & bonnet : ASTM A 216 Gr. WCB / ASTM A 105 Trim: ASTM A 182 Gr. F6 or Equivalent
4.20.1	Sludge pit isolation valves - Body		CI to IS-210 Gr. FG-260
4.20.2	Sludge pit isolation valves -Spindle & Trim		13% Cr. Steel.
4.21	Sludge outlet pipe		C.I.
4.22.1	Stop Log gate in Cold water Outlet Basin		As per civil specification (Book 2 of 2)
4.22.2	Guide for Stop Log gates		As per civil specification (Book 2 of 2)
4.23.1	Screen		As per civil specification (Book 2 of 2)
4.23.2	Guide for Screen		As per civil specification (Book 2 of 2)
4.24	Bolts, buts & other hardware		SS 316
4.25.1	Submesible Sludge Pumps - Casing		2.5 Ni% Ni-Ci to IS 210 Gr. FG-260
4.25.2	Submesible Sludge Pumps -Impeller		ASTM A351 CF8M
4.25.3	Submesible Sludge Pumps - Shaft/Sleeves		SS-316/SS-410
4.26	Material of construction for items not specified		As per purchaser’s approval during detailed engineering.

5.0	**GUARANTEED PERFORMANCE PARAMETERS**		
5.1	Cold-water temperature	DegC	33
5.2	Fan Auxiliary power consumption	kW	850
5.3	Maximum IDCT Pumping head permissible (as per sl. no. 2.16 above)	MWC	20

CLAUSE NO.	TECHNICAL REQUIREMENTS
	(B) COOLING TOWERS - INDUCED DRAFT (MECHANICAL)
1.00.00	**GENERAL**
	This specification covers the design, engineering, manufacture, shop fabrication, testing at works, transportation to site, unloading and storage at site, fabrication at site, Installation, testing and commissioning of induced draught RCC/ Pultruded FRP cooling towers for power plant cooling system.
2.00.00	**CODES AND STANDARDS**
2.01.00	The design, manufacture, inspection, and testing shall comply with all currently applicable standards. The equipment shall also conform to the latest applicable British/American standards. The equipment shall conform to the latest edition of the following standards: -
	i) Cooling Tower Institute Publications.
	ii) BS 4485-Specification for Water Cooling Towers.
2.02.00	**CODES AND STANDARDS FOR FRP COMPONENTS**
	The design of FRP components of cooling tower shall comply with the requirements stipulated in CTI STD- 131, CTI STD -137, and CTI ESG-152. The cooling tower and its components shall be designed to withstand the most onerous loading case / combination resulting from the various loading cases / combinations stipulated in CTI ESG 152. All material properties, stresses and their reduction factors, deflection criteria, material service factors, connection details and their tolerances etc., as applicable as per CTI codes CTI STD- 131, CTI STD -137, CTI ESG-152, shall be so considered such that the cooling tower and its components withstand the severest temperatures in the place of installation and application and serve a reasonably long life not less than CTI indicated life expectancy.
3.00.00	**DESIGN REQUIREMENTS / CRITERIA**
3.01.00	Each cooling tower shall be complete with tower, basin, foundations and mechanical equipment as described below. The tower shall be of double inlet, counter flow type with type of fill as specified in technical data sheets. The tower shall be of induced draught type with the fan located on top of the tower.
3.02.00	The cooling tower shall be designed to meet the duty conditions as specified in this tender specification. Employer may get the verification and review of contractor's design done through third party (who can be employer's consultant/reputed designer/ National or International Technological Institute/National or International body on cooling tower & it's components), if required (during detailed engineering). All necessary data/ details/ drawings shall be provided by the contractor to get the same carried out.
3.05.00	3All cells of the tower shall be identical. Thermal design of the cooling towers shall be such that the guaranteed performance is met without operating spare cell
3.07.00	For counter flow tower the area covered by the projected circle at 45 deg. angle from the fan cylinder opening on the drift eliminator plan area shall not be less than 80% of the drift eliminator plan area.
3.08.00	The layout of the cooling tower in the plant area and the wind rose is indicated in the drawings titled "General Layout Plan". The Bidder shall examine the proposed layout of the tower and accordingly determine the recirculation, which must be taken into consideration for the purpose of design of the tower to ensure that the design parameters of the tower are

maintained when all the cooling towers in the plant are operating simultaneously. Bidder must apply a correction factor to the design wet bulb ambient temperature to accommodate the recirculation effect. Minimum value of this recirculation correction factor shall be as given in technical data sheets. The length of the cooling tower shall be decided based on plant layout to be optimized by the bidder.

3.10.00 **Thermal Design Criteria**

The thermal design of cooling towers shall fulfil following design criteria.

Sensible heat of evaporated water shall be taken into consideration in the thermal design of the cooling tower. The air flow requirement shall not be less than that worked out by the formula given below:

GH = L(TI-T2) + EvT2

Where

L = Water flow rate in kg/hr.
TI = Water inlet temperature to the tower in deg C.
T2 = Water outlet temperature to the tower in deg C.
EV = Evaporation loss in kg/hr at ambient RH
G = Air flow rate in kg/hr.
H = Change in enthalpy of air in kcal/kg.

3.11.00 Calculations justifying the selected airflow and evaporation loss shall be enclosed with the bid. International/National standard table of properties of air shall be used and a copy of the table clearly indicating the standard used shall be enclosed with the bid.

3.12.00 The bidder shall furnish in his bid the following:

i) Heat balance calculations and air requirements for cooling tower as per format given elsewhere.

ii) Available tower characteristics (KaV/L - as a function of air & water rates, fill geometry, hot water temperature, air velocity etc.) based on field performance tests. The relationship shall be of general form of equation given below and shall include values of the constants “C” and “n”. The equation shall cover range of L/G values from at least 20% above to at least 20% below design.

KaV/L = C(L/G)n

The bidder shall also submit an equation and / or curve defining the demand requirement at design approach, range and wet bulb temperature. The design L/G value shall be identified.

iii) Various pressures drop in the air circuit of the cooling tower to arrive at discharge pressure of fan.

iv) Calculations for arriving at the design power consumption.

v) Calculations for pumping head in the format given in elsewhere.

vi) Tower Performance curves (for both ambient and inlet WBT.)

Bidders may note that the calculations/curves specified above must be enclosed with the offer without which bids run the risk of rejection. In case, these calculations are based on the collaborator's design, then these calculations should be duly vetted by collaborator. The Bidder shall show/explain and prove the validity and the basis of procedures and methods used in the calculations.

3.13.00 The tower configuration shall be such that it shall offer minimum restriction to air flow.

3.14.00 To ensure uniform and stable distribution of entering air, the velocity pressure ratio shall not be less than 5 (Five). Velocity pressure ratio is defined as the ratio of system pressure drop

(i.e. from air inlet to the drift eliminator) to the velocity pressure at the inlet. For counter flow towers, the velocity at air inlet shall be calculated based on the clear air entry area available in vertical plane at the inner face of cooling tower wall. For purpose of calculating the velocity pressure ratio, the air velocity shall be computed considering the total airflow entering the individual cell and the total gross inlet air area of the individual cell. This will be calculated independently for each cell and the value calculated for each cell shall not be less than 5. For towers provided with over-dimensioned cold-water basin, the inlet air area shall be computed considering the water level in the cold-water basin at normal water level.

3.15.00 The exit air velocity of the fan recovery stack outlet shall not be less than 6m/s.

3.16.00 Maximum air Inlet velocity should be 5m/s.

4.00.00 Constructional Features

Wood/timber shall not be used as construction material in any part of the cooling tower.

SN	Component Description	Material of Construction	
		RCC IDCT	**FRP IDCT**
1	Hot water header	MS to IS:2062 (around cooling tower)	
2	Hot water distribution pipes for counter-flow tower	PVC (IS 4985 Class 3) / GRP / HDPE (IS 4984 PN6, Grade PE 80)/ as per Bidder's proven practice	
4	Cooling tower shell/ structure	RCC	Pultruded FRP
5	Cooling tower basin	RCC (Refer Civil specifications)	
6	Drift Eliminators	PVC	
7	Louvers	Bidder’s proven practice	
8	Fill	PVC/ PP	
9	Fill supports	SS:316 grid	
10	Fan blades	Fiber glass reinforced polyester/ Epoxy (hollow cast)	
11	Fan Hub	Heavily Galvanized M.S	
12	Fan Deck	RCC	Pultruded FRP

SN	Component Description	Material of Construction	
		RCC IDCT	FRP IDCT
13	Drive shaft and coupling	Stainless steel conforming to AISI 304 or Carbon fiber Composite material with SS 304 couplings.	
14	Base frame and base plate for gear box and motor/ Torque Tube Support	Heavily Galvanized MS	
15	Stair case	RCC	Pultruded FRP
16	Recovery Stack	RCC	Pultruded FRP/ GRP
17	Stop logs	Refer civil specifications.	
18	Any other hardware such as fasteners, clamps, supports etc. in direct contact with water	~~Stainless steel conforming to AISI: 304 or equivalent.~~ **SS 316**	
19	Any other mild steel parts used in cooling tower or its vicinity	Heavily galvanized (610 gm/m^2) in accordance with IS:2629 with corrosion resistant protective coating Surface preparation in accordance with IS:6129	
20	Hand Rails	Refer civil specifications.	Deck Level – Pultruded FRP Others – Refer civil specifications.
21	Misc. Structure(s)	Refer civil specifications.	
22	Nozzles/ Splash cups	PVC/ PP/ Gun metal as per IS:318 Gr. VI	
23	Cladding Sheets	RCC	FRP

4.02.00 **Pultruded FRP structural components**

The Pultruded FRP structural members shall be proven for use in Cooling Towers application. Documentary evidence about past experience of parties in respect of design, manufacture, supply, erection & satisfactory operation of Pultruded structure shall be submitted to the employer.

4.02.01 **Manufacturing Process**

a) **Pultrusion**: The process of pulling continuous forms of reinforcing materials, such as glass-fiber rovings, glass-fiber mats and various surfacing veils through a bath of liquid resin. The mass of fully wetted-out material then continues to a performer and directly into a healed forming and curing die where a chemical reaction is initiated which causes the thermosetting resin to harden and the composite structural shape is formed. An optional method of cure is to pass the wetted-out composite through a radio frequency (RF) preheated. The RF preheat initiates the cure process prior to entering the heated forming die. This process is particularly useful for heavy section processing. The hardened (or cured) shape is cooled in line by water or air and then enters a pulling device where continuous pulling is maintained. Both caterpillar type and reciprocating pullers are used in pultrusion. Upon exiting the puller, the composite structural shape is cut to the desired length.

b) Definition of terms relative to pultrusion can be found in ASTM D-883 and ASTM D- 3918.

c) Other forms or combinations of reinforcements such as carbon fiber, aramid fiber, etc. can also be utilized when different mechanical and physical properties are required. Specific mechanical and physical properties should be negotiated between the pultrusion supplier and cooling tower.

4.02.02 **Design Temperature**

For members in cooling towers which are subjected to extended periods of operation in temperatures greater than 77°F, the pultrusion suppliers published allowable design values for flexural and compressive loads shall be reduced to account for reduced properties at the higher temperatures. These correction factors are published in Table II of CTI STD-137. For Type IV products, pultrusion suppliers are to supply the cooling tower manufacturer with temperature-moisture correction factors. All structural components for the tower should be selected to account for maximum expected hot water temperature including any upset conditions as a minimum (i.e., maximum hot water temperature +10°). This will account for the possible the effects of fan off operation, tower idle in hot weather and load excursions. A statement indicating the design temperature should be included as part of the cooling tower manufacturer's proposal.

4.02.03 **Materials**

a) Glass fiber-reinforcements may be either continuous roving's, continuous strand mats, woven or non-woven fabrics, uni-directional fabrics or combinations of these. Glass fibers shall be made for A, C, E or S-type glass. Other reinforcements may be specified for custom applications.

b) The resin grade shall either be a Grade I isophthalic polyester resin or Grade 3 vinyl ester resin as per Section 4.2 of CTI Std. 137. The resin may contain additives for various purposes such as flame retardancy. UV stabilization, pigmentation or smoke reduction. These additives should be selected so as to add to the overall performance of the product without affecting the structural properties, chemical resistance an/or longevity of the part.

c) Surfacing veils shall be used to improve surface appearance, assistance in chemical resistance, improved weatherability and to prevent glass fibres from coming to the surface as a result of wear or UV attack. Surfacing veils are thin tissue-type products incorporated during the pultrusion manufacturing operation as the outermost surface layer of non-resinous material. All exterior surfaces of Pultruded members shall have a minimum surface veil of 10mil and shall have UV inhibitors to protect against UV degradation. Heavier surface veils may be provided on supplier's discretion. The final degree of UV protection is a function of the total manufactured thickness of the surfacing veils and/or surface coatings. Glass fibres exposed during fabrication process and/ or installation shall be gel coated and sealed to prevent wicking.

4.02.04 **Physical Properties**

CLAUSE NO.	TECHNICAL REQUIREMENTS
	Physical properties should be in line with CTI specifications, CTI-STD-137. Moreover, the pultruded FRP structural components shall be fire retardant with the resin composite having a flame spread rating less than 25 as per ASTM E 84 standards.
4.02.05	**Mechanical Properties from Coupons** Minimum mechanical properties (taken from coupons) shall be as per CTI specifications CTI-STD-137.
4.02.06	**Applicable Documents** a) CTI STD-137: Fiberglass Pultruded Structural Products for use in Cooling Towers b) CTI STD-152: Structural Design of FRP components c) ASTM D-4385 Practice for Classifying Visual Defects in Thermosetting Reinforced Plastic Pultruded Products. d) ASTM D-3647 Practice for Classifying Reinforced Plastic Pultruded Shapes According to Composition. e) ASTM D-3917 Specification for Dimensional Tolerance of Thermosetting Glass-Reinforced Plastic Putlruded Shapes. f) ASTM D-3918 Definitions of Terms Relating to Reinforced Plastic Pultruded Products.
4.02.07	Ultraviolet exposure test for 300 hours to be carried out at reputed third party laboratory once as per ASTM G-154 and Impact resistance test before & after UV exposure shall be conducted as per ASTM D-256. This will be applicable to Pultruded as well as moulded FRP components.
4.02.08	FRP tower shall be with proper sealing/isolation between cells to avoid short circuiting of air between adjacent cells of Cooling Tower and ensure that there is no reverse rotation of fan.
4.03.00	**Cooling Tower Basin and Shell Structure** The material of cooling tower basin and super structure shall be as mentioned above. The depth of basin shall be at least 1.0 m from normal water level with free board of at least 0.3 m above maximum water level unless otherwise indicated in relevant tender drawing. The Velocity of water at the outlet of the cooling tower should not exceed 1 (one) m/sec. If required, the basin may be suitably depressed to meet this requirement.
4.04.00	Cold Water Basin **Drainage Arrangement**
4.04.01	Cold water from the basin shall flow by gravity to cooling water channel through the outlet channel.
4.04.02	Provision shall be made to completely drain the basin. For this purpose, the basin floor shall slope towards the drain sump in the Cooling Tower as shown in the relevant tender drawing. Water shall flow from the drain sump into an external sludge sump through a 300 mm NB GRP pipe 12mm thick and a gate valve of size 300mm NB with extended spindle. Two sludge sumps shall be provided for each tower. The sludge sump shall be at least 2m x 2m plan area and minimum 2.5m deep. One number sludge disposal pump of capacity 150 cum/hr and suitable head shall be supplied for each sludge sump. Sludge Pumps can be of fixed type or submersible type with proper handling arrangement.
4.05.00	**Inlet Louvers**

The water loss in the inlet air openings shall be prevented with provision of adequate number of louvers of proper slope, width and spacing or alternatively by over dimensioning the cold-water basin by minimum 1.0 meter all-around. Louvers, if provided, must be properly designed to give uniform distribution of air with minimum pressure drop and must be able to withstand the corrosive atmosphere.

4.06.00 Cooling Tower **Fill and Fill Supports**

1) The fill shall be of non-clogging type fills like Splash/Modular/Trickle type fills and easily installable. The fills shall be adequately supported to prevent sagging and damage. The tower shall be levelled so that water will be uniformly distributed over the fills and does not cause channeling. The splash type fills shall be placed horizontally.

2) The non-clogging type fills shall be in modular form. These fills are to be mechanically assembled without any use of adhesives. Assembling by other proven method is also acceptable. The fill shall be freely rested, and bottom supported to prevent any sagging and damage.

3) The fill material shall promote a high rate of heat transfer, provide low resistance to air flow and maintain uniform water and air distribution throughout the fill volume. The fill material shall be highly resistant to deterioration and shall be fire retardant. PVC/PP fill, shall be of proven quality. The make and its properties shall be subject to Employer's approval. Bidder shall furnish details of PVC/PP fill regarding fire-retarding properties, ageing effect, vibration caused by water and wind effects. The property of PVC/PP fill shall be in line with CTI 136: 2010.

4) In case of PVC/PP fill, the material should be ultra violet ray stabilized and only virgin PVC/PP material should be used.

5) The type of fill to be supplied for this package shall be of proven design. Necessary supporting data for this shall be enclosed along with the bid.

6) Preferably, the fill shall not be extended into the air inlet area. In case the bidder's standard design calls for such an arrangement, then field performance test results of towers with comparable fill arrangement supplied by the bidder duly certified by the user shall be furnished along with the bid to establish the design.

7) Type Test of PVC/PP Material

In addition to the routine tests specified in this Technical specifications, ultra-violet exposure for 500 hours on the PVC/PP material shall be carried out for this contract once as per ASTM-G155, Test Method 3 and Impact resistance test before and after UV exposure shall be conducted as per ASTM D-256. The above type test shall be carried out by the Contractor at reputed third-party laboratory.

Offered fills shall be tested by an independent reputed laboratory approved by OWNER to validate thermal characteristic and pressure drop correlation of the offered fill. In case the bidder has conducted such tests for other reputed clients in the past, the report of same is also acceptable subject to owner's approval.

4.07.00 **Inlet Water Distribution System**

1) General Requirements:

The hot water distribution system of the tower shall be designed to ensure uniform distribution to all operating cells and also to all areas in a cell.

Each

cell shall be able to operate independently. Suitable valves for isolation of any cell for any maintenance or repair work and to regulate the flow of water to individual cells shall be provided. The water shall be discharged throughout the plan area of the packing. For counter flow towers sufficient headroom (minimum 1.8M) shall be provided between the water distribution system and drift eliminator for inspection and maintenance. Fill cone down spray/up spray water distribution system should be provided so that there is no interference between the nozzle exit and top of fill.

2) Special requirements of distribution Nozzles:

i. The Nozzles shall be arranged in a uniform pattern with proper distance to produce 15% overlapping of the individual sprays.

ii. Selected nozzle characteristics like 'Head vs Flow' and 'Head vs Spread area' at three or four distances from nozzle bottom to fill top shall be furnished based on the 'Single nozzle test' and 'Four nozzle test'. Previous test reports are to be furnished covering all tests along with the offer. In case the test was not conducted in the past, the above tests shall be carried out in presence of the Employer.

iii. Single Nozzle Test: The nozzle shall be placed at the bottom of the overhead tank. The head in the tank can be maintained at different head of 0.1 m, 0.2 m and 0.3 m by adjusting the inlet flow. The water spread area for different heads and flow can be measured with the help of spread measuring instrument (scale) in LHS and RHS.

iv. Four Nozzle Test: The nozzle shall be placed at the bottom of tank. The water-collecting compartment shall be placed at the bottom and center of spray nozzles. For different head, the quantity of water collected in the collecting compartments for 30 seconds/ 60 seconds shall be measured and this shall be verified with the design prediction/ assumption.

v. Nozzle connection with internal hot water distribution pipes shall be preferably by fasteners. Fasteners shall be of stainless steel. Push on fit type connection is not acceptable.

4) Specific Requirements for counter flow towers:

All distribution pipe work shall be adequately supported. The pipe supports shall accommodate thermal movement while ensuring the pipe joints do not fail when subjected to pressure surges. The Bidder shall submit the details of the proposed method of supporting distribution system. The design calculations for sizing of the system shall be furnished by the Bidder for Employer's approval during detailed engineering stage.

5) Specific Requirements for Pultruded FRP Cooling Towers:

Each riser pipe in case of Pultruded FRP Cooling Towers shall be connected to the Cooling Tower shell through a rubber expansion joint of the diameter same as that of the riser pipe and meeting the requirement of REJ as specified elsewhere in this specification.

4.08.00 **Drift Eliminators**

The drift eliminators shall be designed to keep the drift loss to a maximum of 0.001% of total water in circulation. The drift eliminators shall be of profile type and gluing is not allowed. The air pressure drop across the eliminators shall be kept to a minimum by providing proper

number of airflow direction changes across the eliminators. The water collected in the eliminators shall be returned to the tower basin and shall not mix with the discharge air system.

HOT WATER PIPING, VALVES, ACCESSORIES

The hot water pipe running along the air inlet side of CT shall be underground.

4.09.00 Recovery stack

Recovery stack shall be of proper shape to improve the fan performance. The height of the stack shall be sufficient to recover the velocity and discharge the humid air to a sufficiently high level to minimize recirculation. The maximum efficiency of the stack for velocity recovery to be considered for calculation of fan power consumption shall be 75%. No credit shall be given during bid evaluation for efficiency of the stack for velocity recovery beyond the specified efficiency. In case, Fan power consumption figure (quoted by the bidder) is derived considering higher velocity recovery, the same shall be corrected for evaluation purpose. A minimum clearance between the stack and fan blades shall be maintained along the entire periphery of the stack to prevent the rubbing of fan blades while rotating.

4.10.00 Fan Deck

4.10.01 Fan deck shall act as an access platform for the mechanical equipment.

4.10.02 Adequate access for roof deck, fan deck, distribution level, and drift eliminators shall be provided. For counter flow towers there shall be provision for access to water distribution level of each cell from tower roof deck or through stair case provided at each cased face of the tower. Walkways with platforms and suitable hand and knee rails and toe guards shall be provided inside towers.

4.10.03 Handrails shall be provided all around the periphery of the cooling tower fan deck. Pipes shall be of 32 NB (Medium class). Handrails provided elsewhere should also conform to the above specification.

4.12.00 Staircase

For access up to the top (roof) of the cooling tower, two numbers of staircases one at each face of the tower shall be provided for cooling tower. The staircases shall be constructed adequately away from the face of cooling tower in order to prevent splashing of water on the stairs.

4.13.00 **Gearbox**

The fans shall be motor driven through suitable reduction gear. Flexible coupling shall be provided both at motor and reducer to minimize the effect of misalignment on account of any setting and/or warping. Flexible couplings should be pin and bush type. The support structure of the reduction gear shall be rigid. The reduction gear shall be heavy-duty type suitable for installation in outdoor and humid environment. The gear drive shall be of spiral bevel or worm type and the reduction may be accomplished in either single stage or multi stages.

4.13.01 The gearbox shall be of proven design. Design rating of the gear box shall be arrived at after considering a suitable service factor (min. 3.0) on motor rating. In selecting the gear box design rating the thermal derating effects at 50 degree C shall also be considered. Gearbox thermal rating shall be calculated considering max. Operating Gearbox Oil temperature which should be at least 5 deg C lower than the Permissible Gearbox Oil temperature. Detailed gear box

CLAUSE NO.	TECHNICAL REQUIREMENTS
	sizing calculation shall be furnished for Employer's approval during detailed engineering. In no case, the design thermal rating of the gear box shall be less than 125% of the name plate kW rating of the selected drive motor. Also, the mechanical rating shall be checked so that minimum 25% margin is available at Pull Out Torque of the motor.
4.13.02	The piping for oil level gauge/dipstick and thermometer shall be arranged in such a way that oil can be drained and refilled from outside the stack. This pipe shall have proper supports at frequent intervals and shall be insulated. Further, a breather connection shall be provided in the gear box. The breather provided shall be such that it prevents moisture from entering the gear box. The breather arrangement and details of oil seals shall be to Employer's approval. Oil temperature gauge should be located outside the cell through a capillary tube, which is connected to gear box stub.
4.13.03	The gear box design should be such that the temperature of oil shall be within the manufacturer's recommended limits during all operating conditions.
4.13.04	The gear boxes shall utilize non-hygroscopic oil for lubrication so that its lubricating properties are not lost if contaminated with water vapor.
4.13.05	Each gear box shall be provided with a base plate. The vibration measurement sensors shall be mounted on the gear box. Vibration probe should not be mentioned on the inspection cover of the gearbox.
4.13.06	Bidder shall furnish the maximum temperature that the lube oil can withstand and shall guarantee the maximum value of lube oil temperature when the gear reducer is in operation.
4.14.00	**Drive shaft**
	The drive shaft shall be of tubular construction. The design of the shaft shall take into consideration a factor of safety of 2 (minimum) over the torque to be transmitted at design duty conditions. The fan shaft shall be designed in such a way that the first critical speed shall be at least 120% of the operating speed of the shaft. Shaft design requiring intermediate bearings are not acceptable. The beams at fan deck level should be designed based on dynamic analysis. The bearings shall be of proven design and shall be suitable for operation in the humid condition prevalent in the fan stack. The minimum life of bearing shall not be less than 30,000 working hours. The drive shaft design shall be such that the fan blades should not be damaged in case of shaft failure.
	In case of Carbon fiber composite material, drive shaft shall have the following additional requirements.
	1) Shaft flanges shall be preferably of Carbon fiber composite material.
	2) Bonding between shaft and shaft flange shall be done by a proven method.
	3) The Carbon fiber composite material should be ultra violet ray stabilized.
4.15.00	**Fans**
4.15.01	Induced draught fans of suitable capacity shall be provided. Fans shall be axial/propeller type with blades, which can be adjusted so that pitch can be altered +/- 5 deg. from the normal setting. For adjusting the fan blades, graduated stop marks with suitable locking arrangements shall be provided on the hub so that all the blades can be set to the same angle accurately. The fan blades shall be easily removable. These shall be of aerofoil section and shall provide uniform air velocity from hub to tip with low noise and vibration. Fan shall be manufactured as per the processes listed below:
	i) Hand Moulded Seamless FRP fan blades using ballooning method. The method of hand moulding with parting plane is not acceptable.
	ii) Hand moulded FRP fan blades with PU foam core and hot forming.
	iii) Pultruded FRP fan blades.

CLAUSE NO.	TECHNICAL REQUIREMENTS
4.15.02	Stack shall be provided to eliminate air turbulence in the throat area. Blades, shanks and hubs shall be suitably insulated to prevent electrolytic corrosion.
4.15.03	The number of blades shall not exceed twelve (12) and the blade tip velocity shall not exceed 65 m/Sec. Each fan shall be driven by an electric motor.
4.15.04	Fans to be supplied for this package shall be of proven design and make and shall be subject to approval of Employer.
4.15.05	Fan for each cooling tower cell shall be sized (fan design point at test block) to have at least 5% margin on flow and min 10% margin on total head over and above the maximum cooling tower fan air flow and total head required (cooling tower fan duty point), to meet the specified / guaranteed cooling tower performance. Bidder shall submit detailed cooling tower fan calculation, characteristic curves etc. for the fan sizing as per the above.
4.15.06	A scaled down model test of the fan offered shall be carried out by the contractor at the fan supplier test facility or at any other identified/recognized fan test facility to establish the rated parameters such as efficiency, power consumption etc. of the fan. Scale of model shall be minimum 1:10. The test should be carried out prior to start of manufacturing of the fan and shall be conforming to requirement of ANSI/AMCA A 210 or equivalent code.
4.16.00	**FAN MAINTENANCE FACILITIES**
4.16.01	For maintenance of drive equipment (Fan, motor, gear reducer, etc.) following arrangements shall be furnished.
4.16.02	Each cell of cooling tower shall be provided with a monorail. In addition 3 numbers of manually operated chain pulley blocks along with travelling trolley for each of the cooling towers shall be provided. The capacity of the hoist shall be such as to be able to lift the heaviest portion of the fan motor assembly, but in no case less than 2.0 MT. Out of these specified numbers of monorail hoists, one will be used to lift equipment from ground level to tower top and accordingly the lift shall be provided. Balance two numbers of hoists shall be used for handling equipment for two (2) numbers of cells simultaneously during maintenance. The lift of these two (2) hoists shall be selected accordingly. In addition to the above a hand trolley which is sized to carry the heaviest and largest single piece of equipment shall also be provided for the cooling tower. This trolley will be used on the fan deck to transport equipment from each cell to and from the end of tower where the monorail hoist is located to lift equipment from ground level to tower top. For cross flow type of tower care shall be taken so that the equipment to be lifted does not need to be carried over the distribution basin. Suitable platforms/ scaffoldings (for at least 2 fans) for doing maintenance work in situ for gear reducer, fan and motor shall also be provided in addition to permanent walkways as specified elsewhere in the specification.
4.16.03	Alternative arrangements are also acceptable, if the arrangement provided is adequate to carry out maintenance on at least two cells of the tower simultaneously. In such a case, the complete equipment for easy removal of equipment from fan flume and bringing it down to ground level shall be furnished. The arrangement proposed shall be clearly brought out in the offer by the bidder.
4.17.00	**FAN MOTOR** Each electric motor shall be provided with a base plate and a base frame. Fan motor shall have at least 10% margin over the maximum power requirement of the fan when the fan is operating at its test block condition and at 50 deg. C ambient temperature as required at gear box input end.
4.18.00	**STOPLOG GATE AND HANDLING FACILITY** For isolation of the cold-water basin of the tower, groove for steel stop log gate shall be provided in the cold-water outlet channel of each tower. Number of stop logs to be supplied by bidder shall be as mentioned in the civil section. The minimum thickness of skin

plate shall be 8 mm. The structural design of the stop log gate shall generally conform to relevant IS codes. The gate shall be painted with corrosion resistant paint.

To handle the stop log gate a monorail beam at sufficient height shall be provided across each cold-water channel. A hand operated chain pulley block with travelling trolley of adequate capacity to handle the stop log gate shall be provided for each tower. The capacity of the hoist however shall in no case be less than 125% the weight of the stoplog gate.

4.19.00 **Torque Tube Support (in case of Pultruded FRP Tower)**

The torque tube support shall be designed to stabilize the fan within the fan cylinder and maintain constant alignment between the motor and gear reducer. The pipe, heavy angles and plates shall be hot dip galvanized after assembly. It shall be properly fastened to the structure.

5.00.00 MISCELLANEOUS

5.01.00 Necessary stub connections for pitot tube shall be provided in the hot water header of cooling tower for measurement of flow.

Any special equipment tools and tackles required for the successful completion of the Performance & Guarantee Test shall be included by the bidder in his scope.

6.00.00 TESTS AT SITE

After Installation at site, the complete systems/equipment will be operated at site to show satisfactory performance as required by the applicable clauses of the specification. Further, all piping shall be hydraulically tested at site.

7.00.00 PG Test

7.01.00 Bidder shall guarantee that the equipment offered shall meet the ratings and performance requirements stipulated for various equipment covered in these specifications.

7.02.00 The cold water temperature as specified in technical data sheets shall be guaranteed for the design conditions of CW flow, range, ambient WBT specified in technical data sheet and design power consumption indicated by the bidder.7.03.00 COOLING TOWERS

The test circulating water flow shall be corrected for change in test fan power consumption as compared to the design fan power consumption using the cube root formula. “Predicted cold water temperature” shall then be arrived at from the guaranteed cold water temperature by correcting the same for the test conditions of range, ambient conditions and corrected circulating water flow using the performance curves furnished by the contractor. In case the “Test cold water temperature is higher than the “Predicted cold water temperature”, Employer reserves the right to reject/accept the tower after assessing the liquidated damages. The liquidated damages for not meeting the guarantee(s) have been specified elsewhere.

7.04.00 The performance test of Cooling Tower shall be carried out by the Contractor through approved/listed testing agency in presence of Employer. The testing agency proposed by the Contractor shall be subject to approval by the Employer.

The data logged in the data logger shall be given to EMPLOYER in soft form for reference immediately after the test, which should be readable in EMPLOYER computer. In case, any software is required, the same shall be supplied to employer without any extra cost to employer. The testing agency shall simultaneously submit their final report to both Contractor as well as the client (EMPLOYER).

CLAUSE NO.	TECHNICAL REQUIREMENTS
7.05.00	To ascertain the fulfillment of Guarantees of the Cooling Towers, the test results of the tower tested through approved testing agency shall be considered for PG test evaluation and based on the test result, the liquidated damage if applicable shall be levied for all the Cooling Towers.
8.00.00	**CONTROL & OPERATION PHILOSOPHY**
8.01.00	This control write-up/ operation philosophy details the control / operation requirements of cooling tower fans as a general guideline only and the contractor shall furnish his proposed philosophy during detailed engineering for approval of the Employer.
8.02.00	Modes of Operation: The fans can be started in SOLO mode or in GROUP mode. The selection for individual and Group operation shall be made from OWS. Further, any of the fan can be put either in STANDBY mode or NOT IN STANDBY mode. (i) Group Mode START In Group Mode: On receipt of the GROUP START command from OWS, all pre-selected fans (except for the fans selected as "STANDBY") would start sequentially one after another after pre-defined time gap between start of the fans. STOP in GROUP Mode: On receipt of the GROUP STOP command from OWS, all the running fans will be tripped simultaneously. GROUP STOP command will have priority over and already executing GROUP START command. (ii) SOLO Mode: In the OWS, for each individual FAN, a separate START/STOP Button will be provided. The START button will be enabled only when the SOLO mode is selected. A fan can be started in SOLO mode immediately by pressing the START button. The fan can be stopped either by pressing the STOP push-button (of the corresponding Fan) or GROUP STOP button.
8.03.00	Interlock and Protection Following are the Start-up permissive for the fans: 1. MCC Healthy 2. Oil Level Not Very Low 3. Emergency PB not pressed 4. Gear box oil Temperature not high Following are the protections for Fan tripping: 1. Oil Level Very Low 2. Emergency PB Pressed 3. Vibration Very High 4. Motor Overload 5. Gear box Temperature very high Control System shall issue OPEN/CLOSE command for Electrical Breaker operation and monitor status. Necessary interlocks finalized during detailed engineering shall be implemented.

TECHNICAL DATA - PART - A

SL.NO	DESCRIPTION	UOM	DETAIL
1.0	**DESIGN CODES & STANDARDS**		
1.1	Three phase induction motors :		IS15999, IEC:60034, IS: 12615, IS: 325
1.2	Energy Efficient motors		IS 12615, IEC:60034-30
1.3	Mechanical Vibration of Rotating Electrical Machines with Shaft Heights 56 mm and Higher - Measurement, Evaluation and Limits of Vibration Severity		IS 12075/IEC 60034-14
1.4	Designation of Methods of Cooling of Rotating Electrical Machines		IS 6362
1.5	Designation for types of construction and mounting arrangement of rotating electrical machines		IS 2253
2.0	**DESIGN /SYSTEM PARAMETERS**		
2.1	Rated voltage	V	415
2.2	Frequency	Hz	50
2.3	Permissible variations for		
a)	Voltage	%	+/-10
b)	Frequency	%	(+)3 to (-)5
c)	Combined	%	10 (absolute sum)
2.4	System fault level at rated voltage for 1 sec	kA	50
2.5	Short time rating for terminal boxes for 0.25 sec	kA	50
2.6	Type of motors		Squirrel cage induction motor
a)	Non-VFD		Suitable for direct on line starting
b)	VFD (if applicable)		Suitable for inverter duty
2.7	Efficiency class		
a)	Output rating (at 50 deg.C ambient temperature)		Efficiency class IE3
2.8	Rating		
a)	Motor duty		Continuously rated-S1
b)	Design margin over continous max. demand of the driven equipment (min)		10%
3.0	**CONSTRUCTION FEATURES**		
3.1	Winding		Electrolytic grade copper conductor
3.2	Enclosure Details		
a)	Degree of protection		
	i) Indoor application		IP 55
	ii) Outdoor application		IP 55 (Additional Canopy to be provided)
b)	Method of ventilation		Totally enclosed fan cooled (TEFC) type
3.3	Insulation		
a)	Class		'F' with temperature rise limited to class 'B'
b)	General Characteristics		Non-hygroscopic, oil resistant, flame resistant
c)	Special Characteristics		VPI insulation for VFD motors
3.4	Bearings		
a)	Horizontal motors		Grease lubricated ball or roller bearings
b)	Vertical motors		Grease lubricated ball or roller bearings or combined thrust and guide beaing
3.5	Main terminal box		
a)	Type		Detachable type

b)	Location		In accordance with Indian Standards clearing the motor base-plate/ foundation
c)	Terminals		Stud or lead wire type, substantially constructed and thoroughly insulated from the frame
d)	Markings		Phase markings on terminals and direction of rotation marked on the non-driving end
e)	DOP		Same as motor
f)	Position when veiwed from the non driving end		Left hand side
g)	Rotation		90 Deg.
h)	Space heater (for ratings 30 kW and above)		Suitable for 240V, 50Hz 1 ph AC. Separate terminal box provided for space heaters.
f)	Cable glands/lugs/gland plates		
i)	Size		As per cable size used
ii)	Lugs		Solderless crimpting type heavy duty (Aluminium lugs for Aluminium cables and copper lugs for copper cables)
iii)	Glands		Double compression Ni-Cr plated brass glands
iv)	Gland plate thickness		3 mm (hot/cold rolled sheet steel) or 4 mm (non magnetic material for single core cables)
3.6	Earthing points		
a)	No. of points on motor body		Two earthing points on opposite sides with two separate and distinct grounding pads complete with tapped holes, GI bolts and washers.
b)	No. of points on motor terminal box		One earthing point complete with tapped holes, GI bolts and washers.
c)	Earthing Flat size		
i)	LT Motors above 75 KW		50 x 6mm GS flat
ii)	30 KW to 75 KW		35 x 6mm GS flat
iii)	Upto 25 KW		25 x 3mm GS flat
iv)	Fractional kW		8 SWG GS Wire
3.7	Painting		Corrosion proof epoxy based paint with suitable additives to be used.
a)	Paint shade		RAL 5012 (Blue)
b)	Thickness of paint		The thickness of finish coat shall be minimum 50 microns (minimum total DFT 100 microns).
3.8	Minimum spacing between gland plate & centre of bottom terminal stud		
a)	UP to 3 KW		As per manufacturer's practice.
b)	Above 3 KW - upto 7 KW		85 mm
c)	Above 7 KW - upto 13 KW		115 mm
d)	Above 13 KW - upto 24 KW		167 mm
e)	Above 24 KW - upto 37 KW		196 mm
f)	Above 37 KW - upto 55 KW		249 mm
g)	Above 55 KW - upto 90 KW		277 mm
h)	Above 90 KW - upto 125 KW		331 mm
i)	Above 125 KW-upto 200 KW		385/203 (For Single core cables only) mm
3.9	Minimum inter-phase and phase-earth air clearances with lugs installed		
a)	UP to 110 KW		10mm
b)	Above 110 KW and upto 150 KW		12.5mm
c)	Above 150 KW		19mm
4.0	**PERFORMANCE PARAMETERS**		

4.1	Starting requirement		
a)	Minimum permissible voltage as a percentage of rated voltage, at start to bring the driven equipment upto rated speed		a) Up to 85% of rated voltage for ratings below 110 KW b) Up to 80% of rated voltage for ratings from 110 KW to 200 KW
b)	Maximum locked rotor current		As per IS 12615
c)	Starting duty		Two hot starts in succession, with motor initially at normal running temperature.
d)	The locked rotor withstand time		Speed switches mounted on the motor shaft shall be provided in cases where below requirements are not met.
	Starting time of motors at minimum permissible voltage during starting		The locked rotor withstand time under hot condition at highest voltage limit
i)	upto 20 secs.		atleast 2.5 secs. more than starting time
ii)	more than 20 secs. and upto 45 secs		atleast 5 secs. more than starting time
iii)	more than 45 secs.		more than starting time by at least 10% of the starting time
e)	Ratio of locked rotor KVA at rated voltage to rated KW (max.)		
i)	Below110KW		10
ii)	From 110 KW & upto 200 KW		9
4.2	Torque		
a)	Accelerating torque at any speed with the lowest permissible starting voltage		at least 10% motor full load torque
b)	Pull out torque at rated voltage		at least 205% of full load torque
4.3	Noise level (max.)		85 dB(A)
4.4	Vibration limits		As per IS 12075
5.0	**INSPECTION/TESTING**		
5.1	LIST OF TESTS FOR WHICH REPORTS HAVE TO BE SUBMITTED. The following type test reports shall be submitted for each type and rating of LT motor of above 100 KW only. 1. Measurement of resistance of windings of stator and wound rotor. 2. No load test at rated voltage to determine input current power and speed 3. Open circuit voltage ratio of wound rotor motors (in case of Slip ring motors) 4. Full load test to determine efficiency power factor and slip 5. Temperature rise test 6. Momentary excess torque test. 7. High voltage test 8. Test for vibration severity of motor. 9. Test for noise levels of motor(Shall be limited as mentioned above.) 10. Test for degree of protection and 11. Overspeed test.		
5.2	The type test listed above should have been conducted within 10 yrs prior to supply under this contract. In absence of type tests reports or in case reports are not found to be meeting the specification/standards requirements, vendor shall conduct all such type tests without any commercial/delivery implication to BHEL according to the relevant standards and reports shall be submitted to the owner for approval.		
5.3	All acceptance and routine tests as per the specification and relevant standards shall be carried out.Charges for these shall be deemed to be included in the equipment price.		

5.4	For motor rating upto 50 KW, BHEL QP No. PE-QP-999-Q-006 Rev 02 is to be followed. For motor ratings above 50 kW BHEL QP No. PE-QP-999-Q-007 Rev 04 is to be followed		

SPECIFIC TECHNICAL REQUIREMENTS: ELECTRICAL

1.0 EQUIPMENT & SERVICES TO BE PROVIDED BY BIDDER/ PURCHASER

1.1 Scope for supply, and erection & commissioning of various equipment forming part of electrical system for this package shall be as per Annexure-I "ELECTRICAL SCOPE BETWEEN BHEL AND VENDOR".

1.2 BHEL will provide 240 V AC (supply feeder)/415 V AC (3 PHASE 4 WIRE) supply based on load data provided by vendor at contract stage for all equipment supplied by vendor as part of contract.

2.0 DOCUMENTS TO BE SUBMITTED ALONG WITH BID

2.1 Bidder shall confirm total compliance to the electrical specification without any deviation from the technical/ quality assurance requirements stipulated.

2.2 No technical submittal such as copies of data sheets, drawings, write-up, quality plans, type test certificates, technical literature, etc, is required during tender stage. Any such submission even if made, shall not be considered as part of offer.

3.0 LIST OF ENCLOSURES

3.1 Electrical scope between BHEL & vendor (Annexure-I).
3.2 Technical specification - Motors (Annexure-II)
3.3 Technical specification/drawings- Cabling material (Annexure-III)
3.4 Technical specification- Lighting (Annexure-IV)
3.5 Technical specification/drawing- Above Ground Earthing and Lightning protection (Annexure-V)
3.6 Datasheets (Annexure-VI)
3.7 Quality Plans (Annexure-VII)
3.8 Load data format (Annexure-VIII).
3.9 Indicative Sub-vendor list (Annexure-IX)

Annexure-II

TECHNICAL SPECIFICATION
INDUCTION MOTOR

All rights reserved

CONTENTS

SECTION NUMBER	DESCRIPTION
1.0	SCOPE
2.0	STANDARDS TO BE FOLLOWED
3.0	SERVICE CONDITIONS
4.0	GENERAL DESIGN FEATURES
5.0	PERFORMANCE
6.0	COUPLING DETAILS
7.0	ACCESSORIES
8.0	VIBRATIONS
9.0	NOISE LEVEL
10.0	PAINTING
11.0	TESTS AND INSPECTION
12.0	PACKING
13.0	DRAWINGS AND DOCUMENTS
14.0	SPARES
15.0	DEVIATIONS
ANNEXURE - I	DOCUMENTATION FOR INDUCTION MOTORS

All rights reserved

1.0 SCOPE

1.1 This standard covers the technical requirements of design, manufacture, testing at works and delivery in well-packed condition of medium voltage and high voltage induction motors.

1.2 This standard shall be read in conjunction with relevant part of Design Philosophy - Electrical.

2.0 STANDARDS TO BE FOLLOWED

2.1 The design, manufacture and testing of the equipment covered by this standard shall comply with the latest issue of IS-325 and other relevant Indian Standards, unless otherwise specified. Equipment complying with equivalent IEC standards shall also be acceptable.

2.2 The design and operational features of the equipment offered shall also comply with the provisions of latest issue of the Indian Electricity Rules and other relevant Statutory Rules & Regulations. The supplier shall, whenever necessary, make suitable modification in the equipment to comply with the above mentioned rules.

2.3 Flame proof motors shall, in addition, comply with the requirements laid down in IS: 2148.

2.4 Increased safety motors shall, in addition, comply with the requirements laid down in IS: 6381.

2.5 Motors with type of protection “n” shall, in addition, comply with the requirements laid down in IS: 9628.

2.6 Wherever any requirement laid down in this standard differs from that in Indian Standard Specifications, the requirement specified herein shall prevail.

3.0 SERVICE CONDITIONS

3.1 Ambient Conditions

The ambient conditions shall be as indicated in the Design Philosophy - Electrical.

3.2 System Details

3.2.1 The details of power system to which the motors will be connected shall be as indicated in the Design Philosophy - Electrical.

3.2.2 The motors shall be suitable for connection to a power system where transient disturbances are very likely to occur. During the transient disturbances, voltage of the system may completely disappear and return in a short time with the motors still running and connected. Under this condition, the return of voltage may occur at such an instant that the induced e.m.f. in the motor is in phase with the applied voltage giving rise to current surges which may reach a value equal to 1.6 times the starting current and also cause transient torques of large magnitudes.

4.0 GENERAL DESIGN FEATURES

4.1 Enclosure

4.1.1 The enclosure of motors for indoor and outdoor services shall be IP-54 and IPW-55 respectively as per IS/IEC:60529, unless otherwise specified.

4.1.2 Motors for outdoor service shall be provided with special seals for the enclosure, joints, bearing housing, terminal boxes etc. so that no extra protective covering for ingress of water shall be required.

4.1.3 Vertical motors for outdoor installation shall be provided with a rain protective hood.

4.1.4 All external hardware shall be zinc passivated or cadmium plated.

All rights reserved

4.1.5 The enclosure shall be provided with threaded metallic plug to permit drainage of condensed water from the inside.

4.2 **Cooling**

4.2.1 All motors shall be totally enclosed fan cooled conforming to IC-0141 as per IS: 6362 unless otherwise specified.

4.2.2 In case of CACA construction, the same shall conform to IC-0161 as per IS: 6362.

4.2.3 In case of CACW construction, the same shall conform to ICW 37A 91 as per IS: 6362.

4.2.4 Wherever service conditions are such that corrosive agents are present in the surroundings, the following materials of construction for cooling tubes shall be adopted, unless otherwise specified.

For CACA motor - Aluminium tubes having minimum thickness of 1.6 mm

For CACW motor - Low carbon alloy steel

4.2.5 In case of CACW motors, the cooling tubes and flanges shall also be suitable for the cooling water analysis. Trays shall be provided for collection of leaking water with arrangement for its drainage.

4.2.6 The cooling fans shall be suitable for bidirectional rotation of motors. These shall be fastened to the motor shaft by means of compensating rings or will be balanced independent of the motor. Guide key or reference points shall be supplied to prevent wrong assembly. The cooling air shall be sucked from the non-driving end.

4.2.7 The cooling fans shall be made of non-sparking materials such as cast Aluminium (LM-6 alloy) / cast iron.

4.3 **Direction of Rotation**

4.3.1 Motors shall be suitable for both directions of rotation. In case of any design limitation, the same shall be indicated in the offer.

4.3.2 In either case, a plate showing the direction of rotation corresponding to the phase terminal markings shall be fitted at the driving end shield of the motors.

4.4 **Stator**

4.4.1 The stator laminations shall be made from suitable magnetic sheet iron varnished on both sides. Where ventilation is required, these shall be arranged in suitable packs, each pack being separated by spacers to form ventilating ducts for circulation of air.

4.4.2 The slot shall be open type with coils so arranged that the coils can be easily removed for inspection and repair.

4.5 **Rotor**

4.5.1 The rotor shall be of squirrel cage construction, unless otherwise specified.

4.5.2 For small motors, the squirrel cage shall preferably be of pressure die-cast construction. For large motors, the rotor bars and the end rings shall be of copper or copper alloy. The bars shall be firmly placed in slots to prevent vibration during start up / locked rotor condition. Conductor ends shall be securely fixed to the end rings using the latest brazing techniques. Retaining rings shall be provided for high speed machines for the end rings. The rotor cage shall be designed for the required starting and duty cycles.

4.5.3 Wherever wound rotor is specified, the windings shall have the same features as detailed for the stator windings. The rotor voltage shall not exceed the stator voltage.

All rights reserved

4.5.4 The rotor shall be dynamically balanced and shall rotate perfectly with no preferential stop points. The rotor shall be constructed such as to allow the removal or addition of material for balancing.

4.5.5 The rotor shaft shall be electrically and magnetically so balanced that the induced shaft voltage does not exceed 200 millivolt. Otherwise the bearing housing at non-driving end shall be insulated for 2 KV.

4.6 **Windings and Insulation**

4.6.1 The motor coils shall be made out of insulated electrolytic grade copper conductor. Successive coils shall be connected by accessible joints, well brazed and finished smooth to prevent damage to insulation.

4.6.2 The motors shall be insulated assuming the power system neutral as isolated.

4.6.3 All motors shall be insulated with F insulation with tropical and fungicidal treatments.

4.6.4 Wherever class F insulation is specified, the windings shall be easily replaceable type and the temperature rise shall not exceed that of class B insulation.

4.6.5 The winding coils shall be dried, properly impregnated with suitable varnishes to withstand the site conditions and properly baked. At least two additional impregnations and baking shall be applied to the assembled stator coil, making a total of three impregnations and baking. Finally the windings shall be painted with special anti-acid and anti-alkali paints to withstand the site conditions.

4.6.6 The windings shall be well brazed and capable of withstanding thermally and mechanically the transient disturbances specified under clause 3.2.2.

4.6.7 Lead-in wire between the windings and the outside terminals shall be made through bushings in H.V. motors. For M.V. motors, heat resistant insulated conductors shall be used as lead-in wire.

4.6.8 The windings shall be star connected for high voltage motors and delta connected for medium voltage motors.

4.7 **Slip Rings and Brushes**

4.7.1 Slip rings shall be located in the non-driving side. The material of construction shall be copper alloy. The slip rings and the brush gear shall be cooled by the motor cooling fan.

4.7.2 For explosion proof motors, the slip rings and brush gear shall be housed in a flameproof housing. In case this is not possible, the housing shall be pressurised type with flameproof pressure switch for interlocking with the motor. In either case, glass covers shall be provided for inspection.

4.7.3 The starting rheostats shall be designed for intermittent duty and rated for 10 minutes. Where speed regulation is required, the rheostats and the controllers shall be suitable for such duty and be continuously rated. Auxiliary contacts shall be provided on the controllers for connections to the motor supply controls to prevent wrong operations during starting.

4.8 **Bearings**

4.8.1 All motors shall be provided with bearings suitable for the application. The bearings must be guaranteed to ensure a smooth operation and a life not shorter than 30,000 hrs.

4.8.2 Where external thrusts are specified, the motors shall be fitted with special roller thrust bearings capable of withstanding the specified thrust. In such cases, the guaranteed life of the bearings shall not be less than 20,000 hours.

All rights reserved

4.8.3 The bearing housing shall be effectively sealed against ingress of dust and water and creep age of lubricants along the shaft.

4.8.4 The bearing shall be suitable for both directions of rotation of the motor.

4.8.5 All motors shall be provided with on-line grease lubrication arrangement for both DE and NDE side bearings except for motors of frame size 112 and less and flange mounted M.V. motors. The arrangement shall be complete with grease nipple and drain plug located at convenient locations.

4.8.6 All oil lubricated bearings shall be fitted with oil level indicator and resistance temperature detector/dial type thermometer with alarm and trip contacts.

4.8.7 Self cooled bearing system shall be preferred.

4.8.8 The manufacturer shall specify the type of lubricant and the time interval of lubrication for the bearings of each motor.

4.8.9 The bearing temperature shall not exceed 90ºC for grease lubricated bearings and 70ºC for oil lubricated bearings.

4.8.10 Wherever shaft end-play has been specified, the bearings shall be capable of providing the specified end-play.

4.9 **Terminal Box**

4.9.1 All the terminal boxes shall have identical degree of protection as that of the motor.

4.9.2 The power terminal box shall be mounted on the right hand side of the motor as viewed from the coupling end. For M.V. Motors, design of terminal boxes shall be such that it may be possible to arrange top/bottom/side entry of cables at site.

4.9.3 The power terminal boxes shall be as follows:

a) For H.V. motors - Phase segregated type capable of with standing the system fault level for 0.2 Sec. or more.

b) For M.V. motors - Manufacturer's standard box with epoxy or SRBF moulded terminal board.

4.9.4 The mounting arrangement of power and neutral side terminal boxes for HV motors shall be identical so that it shall be possible to interchange the boxes at site.

4.9.5 In case of H.V. motors, all the six leads of the motors shall be taken out, three on one side and three on the other side to separate terminal boxes. However, neutral shorting link shall be provided on the neutral box for star connection.

4.9.6 In case of M.V. motors, all the six leads of the motors shall be taken out to a common terminal box. Shorting links for delta connections shall be provided in the terminal box for motors 112 frame and above.

4.9.7 For increased safety motors and for motors with type of protection "n", the terminals shall be provided with positive locking device so that they do not become loose during normal operation.

4.9.8 The power terminal boxes shall have adequate clearances in between the terminals and also between the terminals and cable gland for proper termination of cables. Where more than one cable is required to be terminated in parallel, the spacing in the box shall be adequate for easy termination.

4.9.9 Separate terminal boxes shall be provided for connection of power, control and space heater cables.

4.9.10 All terminal boxes shall be complete with heavy duty double compression type cable glands and lugs/connectors to receive the external cables.

All rights reserved

4.9.11 Where cross linked polyethylene cables are specified, the terminal box shall be suitably designed for proper termination of such cables.

4.9.12 The cable lugs shall be of tinned copper and suitable for crimping.

4.10 **Geared Motors**

Where geared motors are specified, the gears shall be oil lubricated, heavy duty as per AGMA class III and capable of transmitting the rated motor power continuously. They shall be capable of withstanding moderate shock loads having a service factor of 2 and the starting duties. They shall be silent and smooth in operation. Inspection glass shall be provided to indicate the oil level in the gear box.

5.0 PERFORMANCE

5.1 **Starting**

5.1.1 The motors shall be capable of being started direct-on-line, unless otherwise specified.

5.1.2 The starting torque of each motor shall be higher than the initial resisting torque of the driven load throughout the starting period even at a feeding voltage of 85% of the rated voltage for normal purpose motor and 80% of the rated voltage for special purpose motor.

5.1.3 The starting current of 415 V Motors shall not exceed the values indicated in IS: 12615. Also there shall be no further positive tolerance on the values of starting current.

The starting current of 11 KV & 3.3 KV motors shall not exceed 550% of FLC. No positive tolerance is acceptable over 550% FLC.

5.1.4 The motors shall be suitable for the following starting cycle:

a) With the motor at ambient temperature - 2 successive starts and 3rd start after 5 minutes.

b) With the motor at steady state load temperature - 1 immediate start and 2nd start after 5 minutes. This sequence shall be repeated in the next hour.

5.1.5 Speed switch shall be provided, wherever required, to fulfil the starting conditions.

5.2 **Locked Rotor Condition**

5.2.1 The locked rotor withstand time (t_E), under hot condition at 110% of rated voltage shall be more than the starting time of the motor coupled to the load even at the lowest stipulated starting voltage by 2 secs. for motors, having starting time up to 10 secs. and by 5 secs. for motors, having starting time more than 10 secs.

5.2.2 For increased safety motors, t_E under hot condition shall not be less than 10 secs. The value of t_E shall be determined in the presence of purchaser's representative unless test certificate from an independent testing authority is submitted for similar motors. The time t_E and the locked rotor current shall be stamped on the name plate as well as indicated in the test certificates.

5.2.3 For deciding the time t_E in all cases, the temperature of the insulated stator and rotor shall not exceed the value stipulated under clause no. 5.4.3.

5.3 **Running**

5.3.1 All motors shall be continuous maximum rated (S1 duty as per IS: 325), unless otherwise specified.

5.3.2 The motors shall be capable of delivering the rated output without exceeding the specified temperature rise under the system voltage and frequency variation conditions.

All rights reserved

5.3.3 The motors shall be suitable for running at the rated load for 5 minutes duration at 80% voltage and for 1 Sec. duration at 70% voltage, without exceeding the specified temperature rise.

5.4 **Temperature Rise**

5.4.1 The total temperature of the stator winding under full load running condition shall not exceed the values permissible for the specified insulation class. For increased safety motors, the total temperature shall be 10ºC less than for normal motors.

5.4.2 For explosion proof motors, the maximum surface temperature shall not exceed the values applicable for temperature class of the hazardous gases / vapours present in the surrounding area. However for type 'n' motors, the maximum allowable temperature shall not exceed 200ºC.

5.4.3 In case of starting and locked rotor conditions stipulated under clause nos. 5.1.4 and 5.2.1 respectively, the maximum temperature in the rotor shall not exceed the following values:

For squirrel cage rotor	-	300ºC
For wound rotor	-	As applicable to the insulation class
For explosion proof motor	-	As per temperature class of the hazardous gases / vapours, without exceeding the above temperature as applicable

6.0 COUPLING DETAILS

6.1 Unless otherwise specified, all motors shall be coupled to the driven equipment through flexible coupling.

6.2 Normally the coupling half for the motor shaft shall be supplied by the driven equipment supplier. The coupling half shall be keyed on the shaft with a tapered joint or shrunk with a straight joint. For this purpose, the motor manufacturer shall coordinate all details of the coupling system with the driven equipment manufacturer, wherever required.

6.3 Where rigid coupling is specified, the motor shaft shall have the desired class of accuracy.

6.4 For all vertical flange mounted motors, the limitations on shaft extension, run out, perpendicularity and eccentricity, as required by the driven machine supplier shall be complied with by the motor supplier.

6.5 i) If the motor is to be coupled to a reciprocating pump or compressor requiring fluctuating torque, the motor supplier shall ensure that the inertia of the driving and driven machine assembly shall be such that the variation in the armature current shall not exceed ±66% of the rated current while delivering full load.

ii) The measurement of armature current shall be done with the oscillograph.

iii) The additional fly wheel, if any, shall be assembled at such a distance from the motor so as to allow easy inspection of the windings.

iv) All necessary coordination with driven equipment manufacturer shall be carried out by the motor manufacturer.

6.6 i) Wherever belt drive is specified, the motor supplier shall ensure that the shaft extension and the bearings are suitable for the duty specified.

ii) Unless otherwise specified, the slide rails for all belt driven motors shall be supplied by the motor manufacturer.

All rights reserved

7.0 ACCESSORIES

The motors shall be complete with all the accessories.

7.1 Space Heaters

7.1.1 Space heaters rated for 240 V A.C. shall be provided to keep the winding dry for all high and medium voltage motors, except for motors rated below 30 KW which shall be suitable for space heating by connecting 24 V A.C to any of the two motor winding terminals.

7.1.2 The location of the space heaters shall be such as to allow easy access for inspection, maintenance and replacement.

7.2 Name Plates

7.2.1 The name plates shall be of stainless steel with letters embossed on them.

7.2.2 The name plate shall contain all the relevant details as per IS: 325 and in addition shall indicate the following:

i) The description and code no. of motor

ii) Degree of protection of enclosure

iii) Temperature rise of windings under running condition

iv) Designation of bearings

v) Recommended type of lubricant and interval of lubrication

vi) Direction of rotation

vii) Mounting Arrangement

7.2.3 Flameproof motors shall have additional name plate containing relevant particulars as per IS: 2148.

7.2.4 Increased safety motors shall have additional name plate containing relevant particulars as per IS: 6381.

7.2.5 Motors with type of protection “n” shall have additional name plate containing relevant particulars as per IS: 9628.

7.3 Embedded Temperature Detectors

7.3.1 All high voltage motors shall be provided with 6 nos. of evenly distributed embedded resistance temperature detectors for measurement of winding temperature. These shall be located in positions at which the highest temperatures are likely to occur.

7.3.2 In addition, the high voltage motors shall be provided with

i) 1 no. RTD for hot air temperature measurement

ii) 2 nos. RTDs (1 on each side) for bearing temperature measurement of oil lubricated bearings. For grease lubricated bearings, RTD shall be provided only where specified

7.3.3 These RTDs shall be of platinum having 100 ohm resistance at 0ºC and temperature coefficient as 3.850×10^{-3}.

7.3.4 The RTDs shall be 3 lead type having power frequency insulation level of 2KV.

7.3.5 The RTDs shall comply with the requirements laid down in IS: 2848.

All rights reserved

7.4 **Dial Type Thermometers**

7.4.1 In high voltage motors, the measurement of hot air and bearing temperature (of oil lubricated bearings) by dial type thermometers shall be provided wherever specified.

7.4.2 The arrangement shall consist of a dial type of mercury-in-steel thermometer so mounted that its stem shall be located in the maximum temperature region.

7.4.3 The thermometer shall have two potential free contacts for alarm and trip.

7.4.4 All contacts shall be rated for 2 Amps. at 110 V D.C.

7.4.5 For bearing temperature measurement, separate thermometers shall be provided for each bearing.

7.4.6 For grease lubricated bearings, temperature measurement arrangement shall be provided only where specified.

7.5 **Oil Supply System**

7.5.1 For large sized motors, where forced oil lubrication system is considered, a common oil supply system for the motor and the driven equipment shall be provided by the driven equipment manufacturer.

7.5.2 However, the motor supplier shall quote separate price for the complete oil system of the motor.

7.5.3 The system shall be suitable for location near the motor.

7.5.4 The oil supply system for each motor shall include:

i) 2 Nos. 100% rated motor driven pumps with motors

ii) 1 No. oil tank complete with oil level gauge and thermometer

iii) 1 No. oil cooler

iv) 1 No. oil filter

v) 1 No. differential pressure switch for filter

vi) 2 Nos. pressure switches

vii) Necessary piping

viii) Necessary control and interlocks

8.0 VIBRATIONS

The motor vibrations measured at the bearings must not exceed the limits specified in IS: 12075.

9.0 NOISE LEVEL

The motor noise level shall not exceed 85 dB measured at a distance of 1 metre from the motor.

10.0 PAINTING

10.1 Enclosures of the motor and its accessories shall be painted with two coats of anti-rust paint and two coats of anti-corrosive paint after suitable pre-treatment.

10.2 Epoxy paint shall be used.

10.3 Unless otherwise specified, the finishing shade shall be light grey having shade No. 631 as per IS: 5.

All rights reserved

11.0 TESTS AND INSPECTION

11.1 All motors shall be routine tested as per relevant standards.

11.2 Additional tests, wherever specified, shall be carried out on one motor of each rating.

11.3 For high voltage motors of each rating, polarization index test shall also be carried out.

11.4 All the above mentioned tests shall be carried out in the presence of purchaser's representative. In addition, the motor shall be subject to stage inspection at works and inspection at site for final acceptance.

11.5 These inspections shall, however, not absolve the vendor from their responsibility for making good any defects which may be noticed subsequently.

12.0 PACKING

12.1 The motors shall be properly packed to safeguard against weather conditions and handling during transit.

12.2 The shaft shall be properly clamped / supported.

12.3 Rust inhibiting agents shall be applied to fittings and sliding surfaces.

12.4 All flanges shall be closed with blanking plates to avoid entry of foreign materials.

12.5 The loose pieces of the motor / spare parts / Instruments shall be separately wrapped in moisture resistant paper and marked with identification marks and name plate of the corresponding motors.

12.6 The packing box / crate shall include a copy of installation, operation and maintenance manual.

13.0 DRAWINGS AND DOCUMENTS

13.1 Drawings and documents as per Annexure-I shall be supplied, unless otherwise specified.

13.2 All drawings and documents shall have the following descriptions written boldly:

- Name of client
- Name of consultant
- Enquiry / order number with plant / project name
- Motor Code No. and Description

14.0 SPARES

14.1 Commissioning Spares: Commissioning spares, as required, shall be supplied with the main equipment. Item-wise list of recommended commissioning spares shall be furnished for approval.

14.2 Spare Spares for 2 Years operation (Mandatory), as specified shall be supplied.

14.3 Recommend 2 years Operational Spares (other than mandatory spare) alongwith recommended quantity & item-wise unit price shall be furnished.

14.4 All spare parts shall be identical to the parts used in the equipment

15.0 DEVIATIONS

15.1 Deviations, if any, from this standard shall be clearly indicated in the offer with reasoning.

All rights reserved

ANNEXURE - I

DOCUMENTATION FOR INDUCTION MOTORS

Sl. No.	Document Description	Documents Required (Y / N)		
		With Bid	For Approval	Final
1.	Specification Sheet and Technical Particulars	N	Y	Y
2.	Dimensional Drawings	N	Y	Y
3.	Drawings and data for air / water heat exchangers, if necessary	N	Y	Y
4.	Drawings and data for oil system, if necessary	N	Y	Y
5.	Characteristic curves			
	a) Thermal withstand curve	N	Y	Y
	b) Load Vs FL current	N	Y	Y
	c) Load Vs Efficiency	N	Y	Y
	d) Load Vs Power factor	N	Y	Y
	e) Load Vs Speed	N	Y	Y
	f) Voltage Vs Thermal Withstand time	N	Y	Y
	g) Starting current Vs Time	N	Y	Y
6.	Connection diagram for RTDs, thermometer etc.	N	Y	Y
7.	Terminal Box drawings	N	Y	Y
8.	Illustrative and Descriptive catalogues	N	N	Y
9.	Catalogues of bought out accessories	N	N	Y
10.	Spare parts list	N	N	Y
11.	Installation, Operation and Maintenance manual	N	N	Y
12.	Test certificates			
	a) Routine	N	N	Y
	b) Type	N	N	Y
	c) For enclosure	N	N	Y
13.	Guarantee Certificates	N	N	Y

Note:

1. 4 hard copies & 1 soft copy shall be supplied for approval after order within 4 weeks from the date of LOI.
2. 8 hard copies & 2 soft copies in CD shall be submitted as final documents prior to despatch of the equipment. These shall be made in sets and supplied in fine plastic coated folder.

Y - Yes, N - No

All rights reserved

Annexure-III

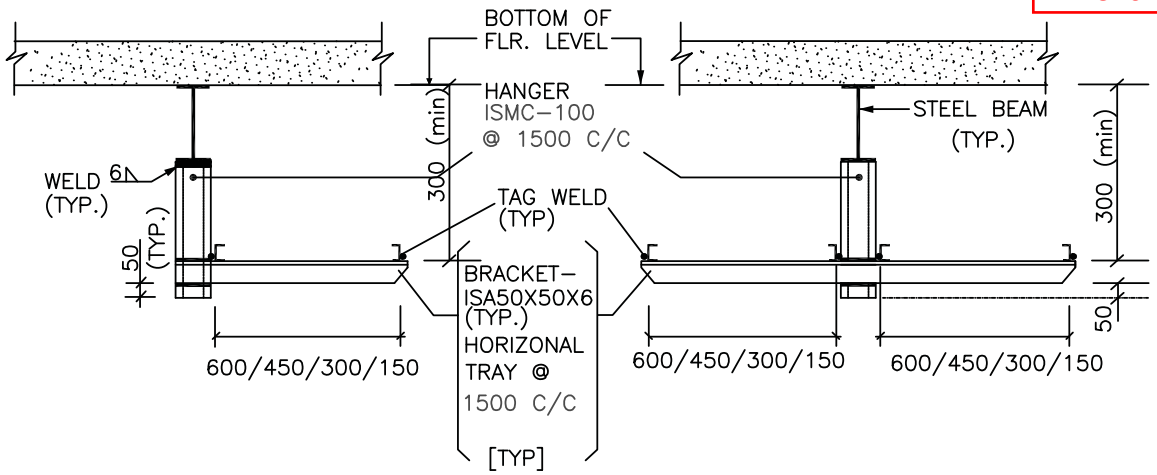

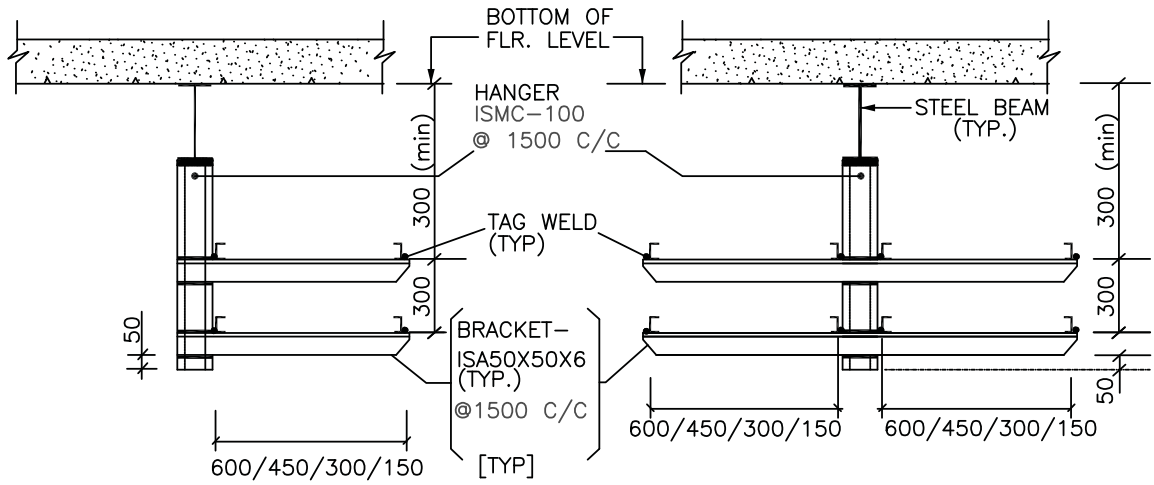

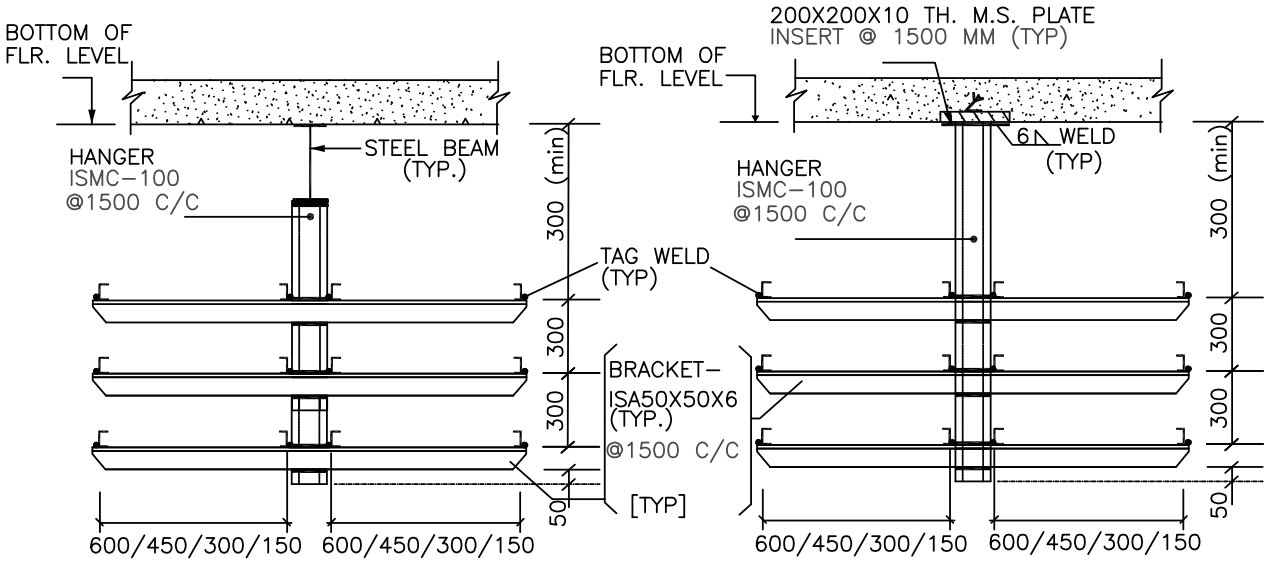

MOUNTING ARRANGEMENT
(FROM CEILING)

MOUNTING ARRANGEMENT (FOR UPTO & INCLUDING THREE TRAYS WITH TOP SUPPORT)

FOR GENERAL NOTES REFER SHEET 15 OF 15

TYPICAL CABLING ARRANGEMENT DETAILS	DWG. NO. PE-DG-511-507-E006
	REV. 01 SHT. 02 OF 15

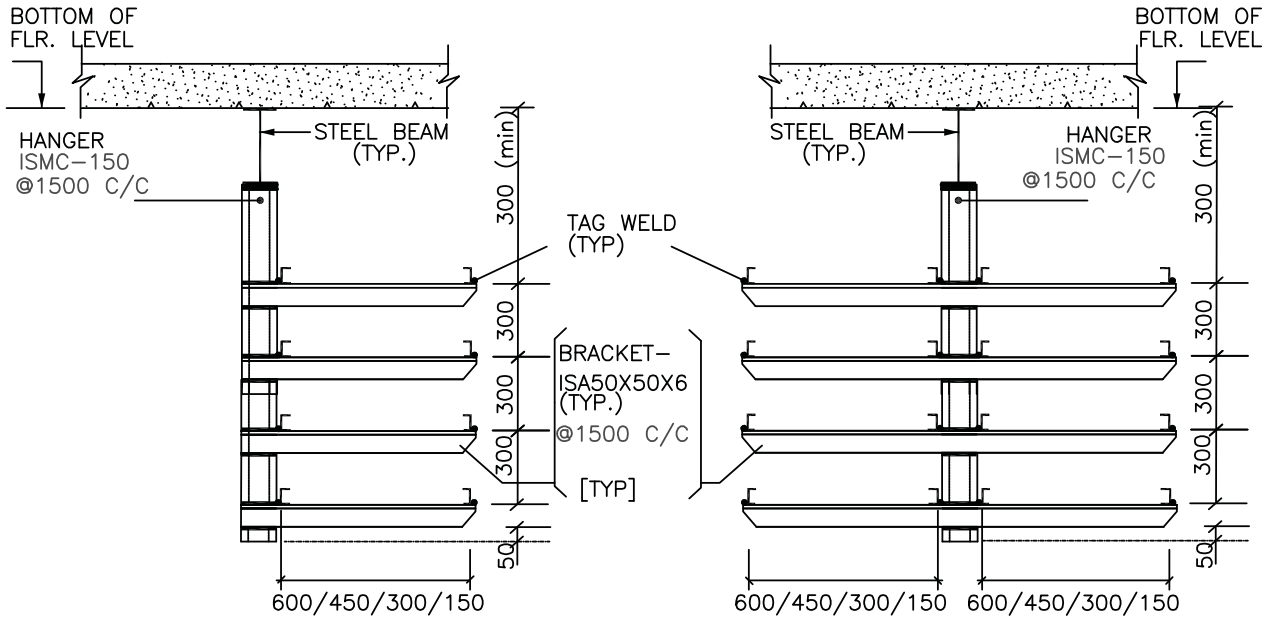

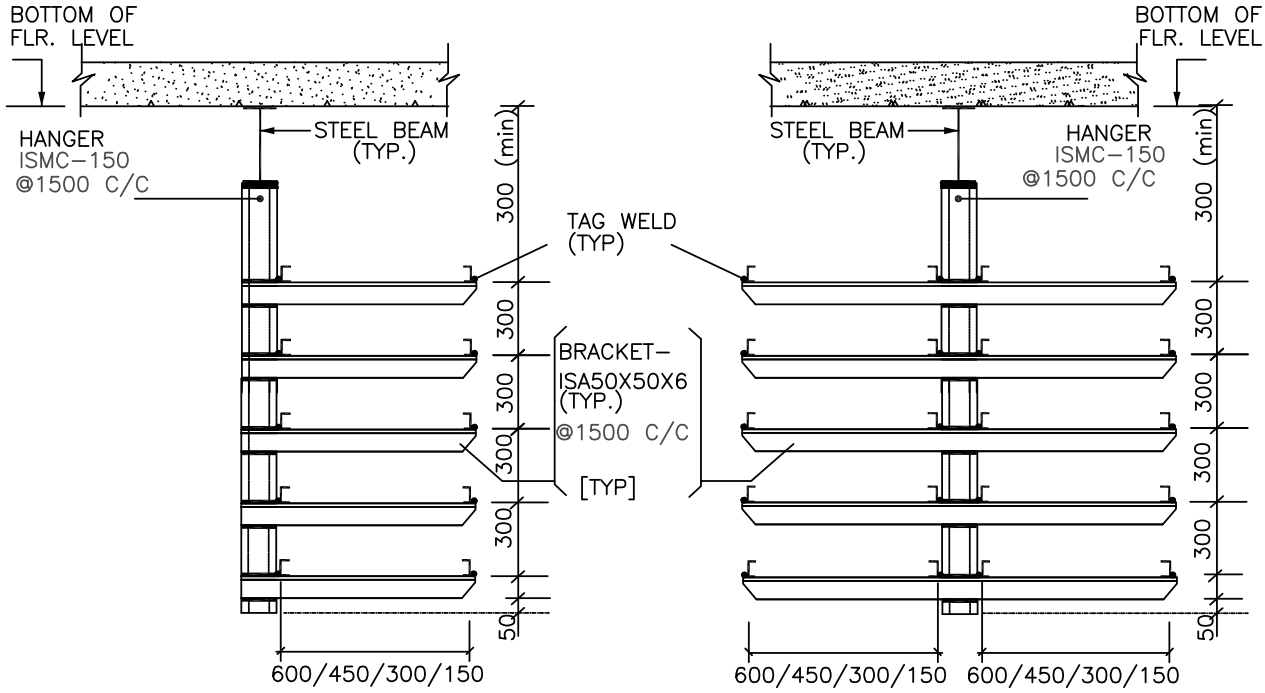

MOUNTING ARRANGEMENT (FOR MORE THAN THREE TRAYS WITH TOP SUPPORT)

FOR GENERAL NOTES REFER SHEET 15 OF 15

TYPICAL CABLING ARRANGEMENT DETAILS	DWG. NO. PE-DG-511-507-E006
	REV. 01 SHT. 03 OF 15

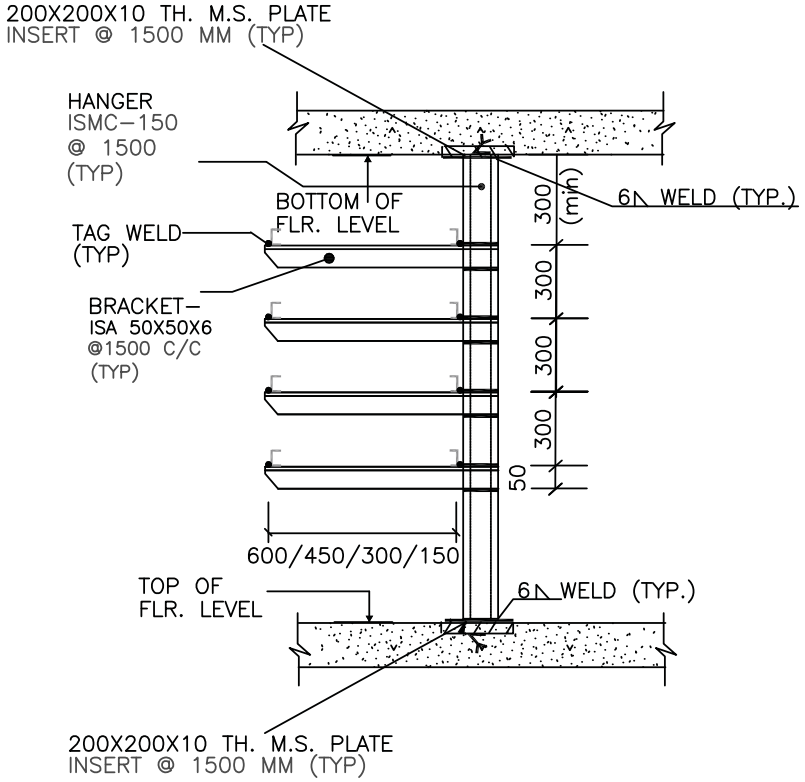

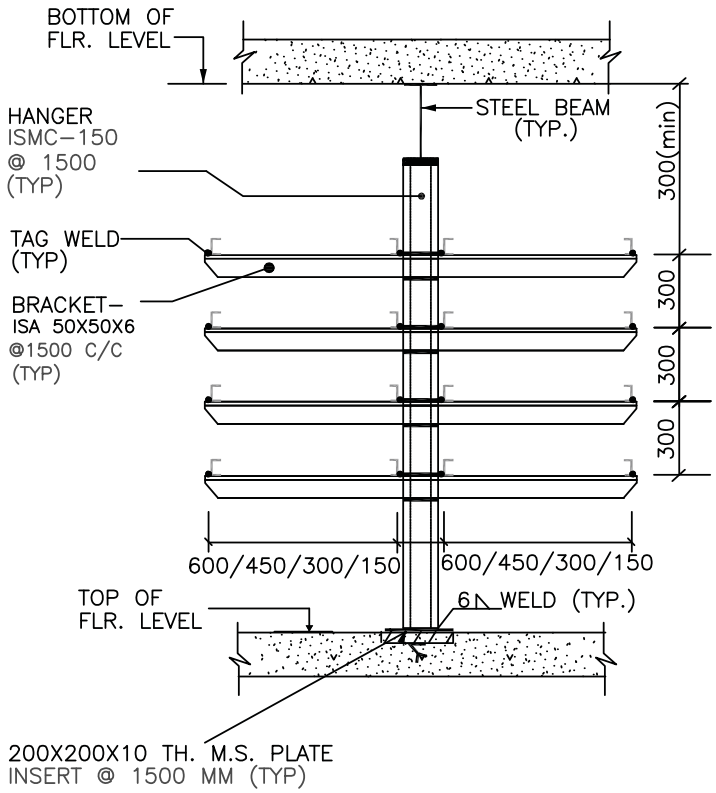

MOUNTING ARRANGEMENT (FOR MORE THAN THREE TRAYS WITH BOTH SIDE SUPPORT)

FOR GENERAL NOTES REFER SHEET 15 OF 15

बीएचईएल BHEL TYPICAL CABLING ARRANGEMENT DETAILS	DWG. NO. PE-DG-511-507-E006
	REV. 01 SHT. 04 OF 15

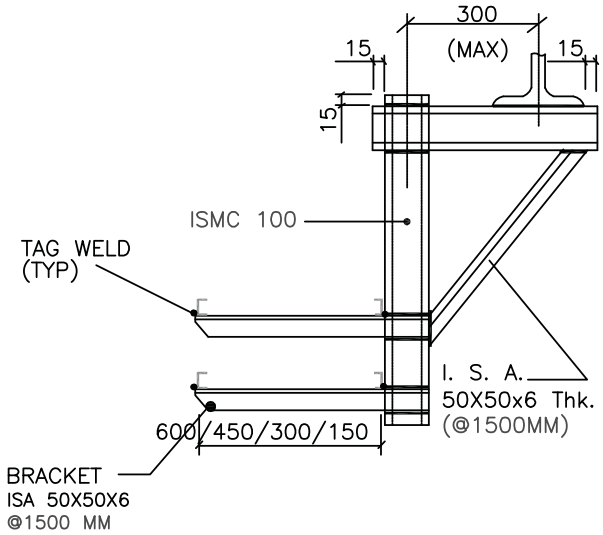

MOUNTING ARRANGEMENT
(FROM FLOOR BEAM)

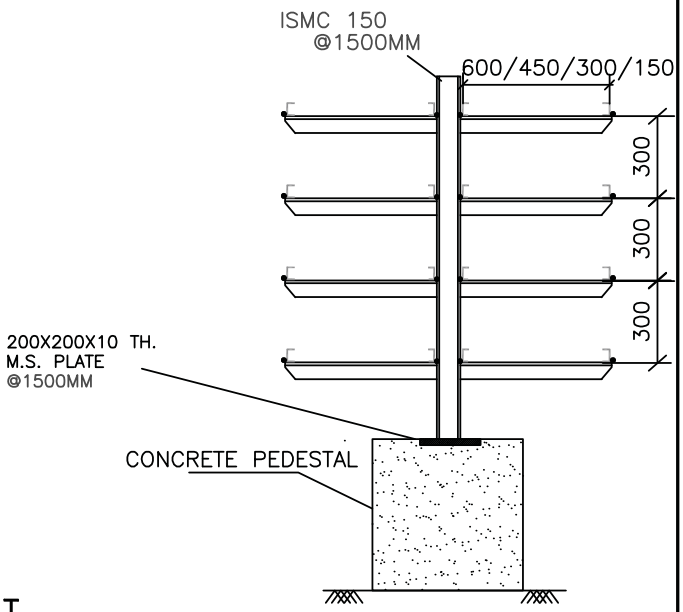

MOUNTING ARRANGEMENT
(ON PEDESTAL)

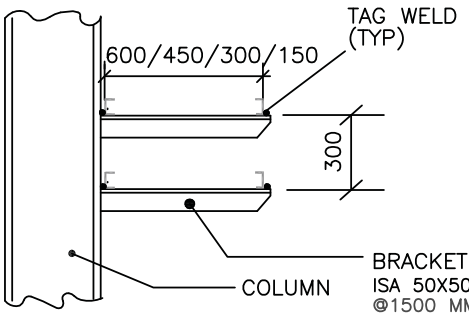

MOUNTING ARRANGEMENT
(FROM STEEL COLUMN)

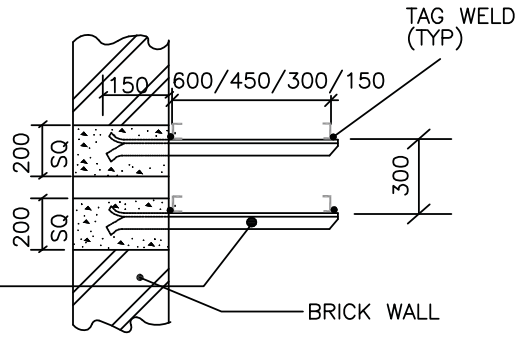

MOUNTING ARRANGEMENT
(FROM BRICK WALL)

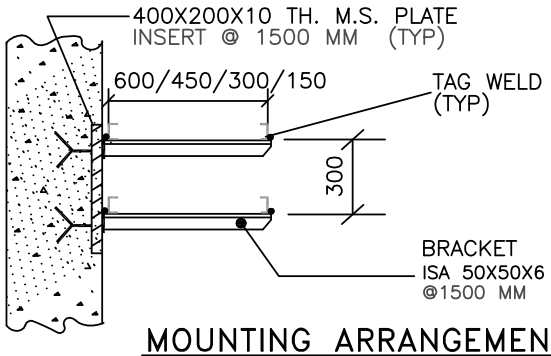

MOUNTING ARRANGEMENT
(FROM CONCRETE COLUMN)

FOR GENERAL NOTES REFER SHEET 15 OF 15

TYPICAL CABLING ARRANGEMENT DETAILS	DWG. NO. PE-DG-511-507-E006
	REV. 01 SHT. 05 OF 15

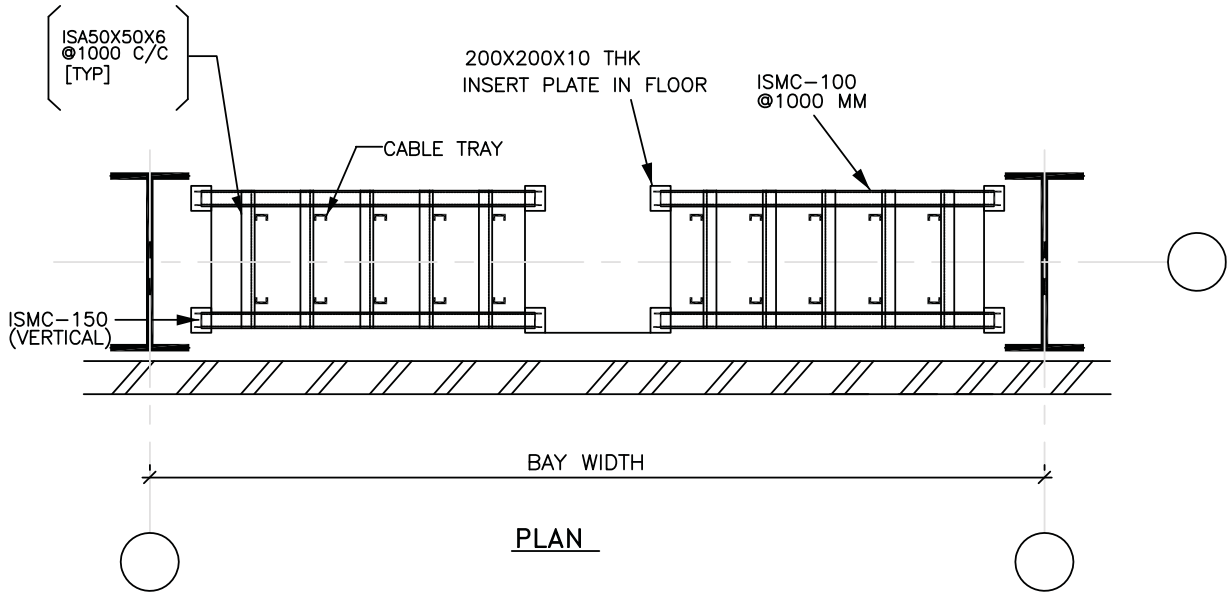

PLAN

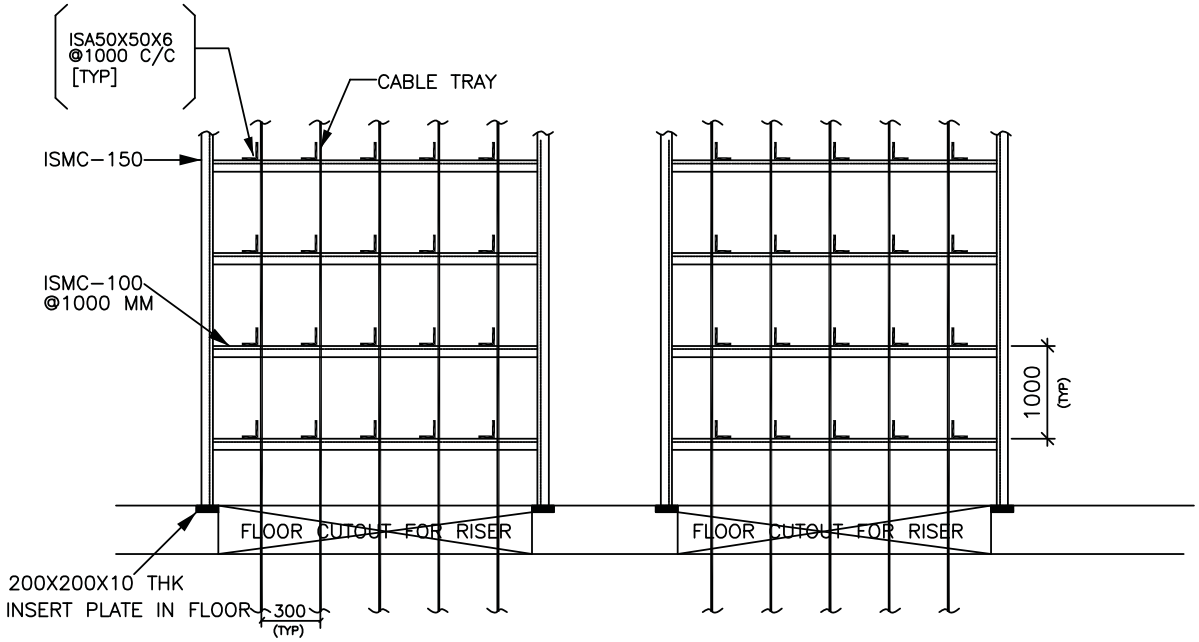

ELEVATION

TYPICAL CABLE RISER IN MAIN PH BLDG

FOR GENERAL NOTES REFER SHEET 15 OF 15

TYPICAL CABLING ARRANGEMENT DETAILS	DWG. NO. PE-DG-511-507-E006
	REV. 01 SHT. 06 OF 15

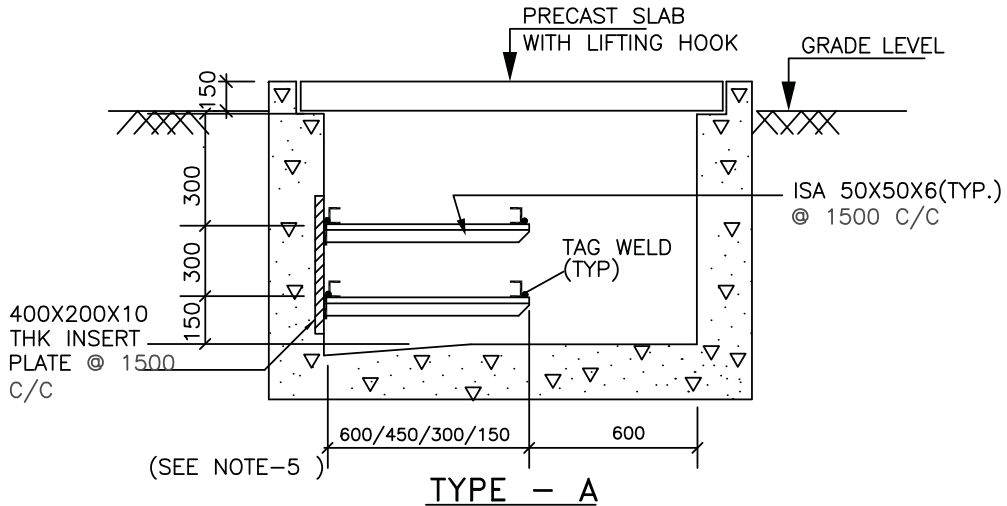

TYPE – A

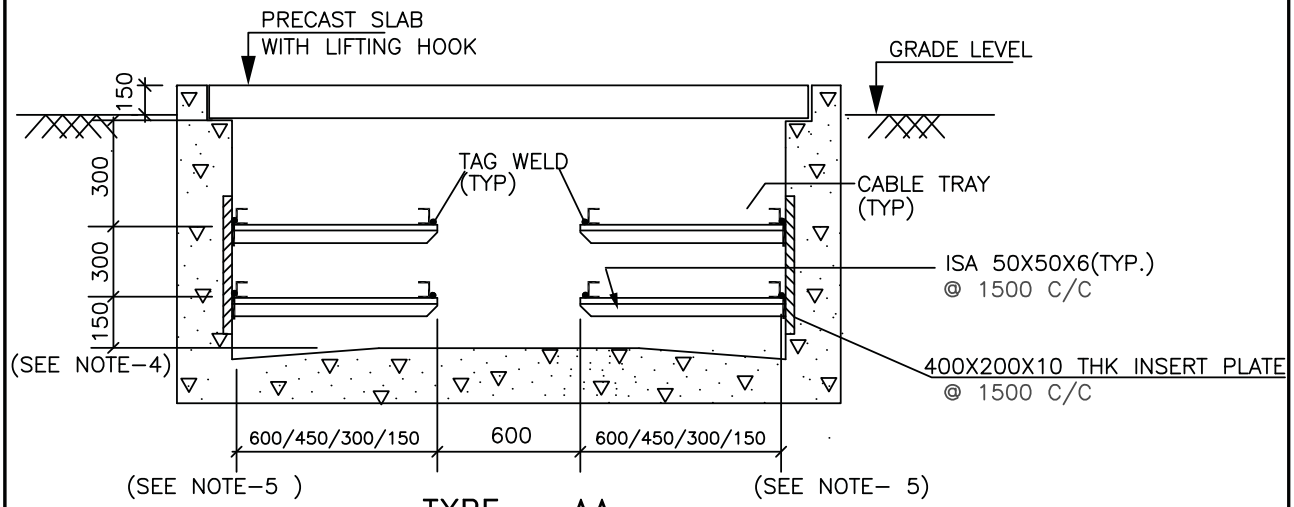

TYPE – AA

MOUNTING ARRANGEMENT IN CABLE TRENCH (SEE NOTE 5)

FOR GENERAL NOTES REFER SHEET 15 OF 15

TYPICAL CABLING ARRANGEMENT DETAILS	DWG. NO. PE-DG-511-507-E006
	REV. 01 SHT. 07 OF 15

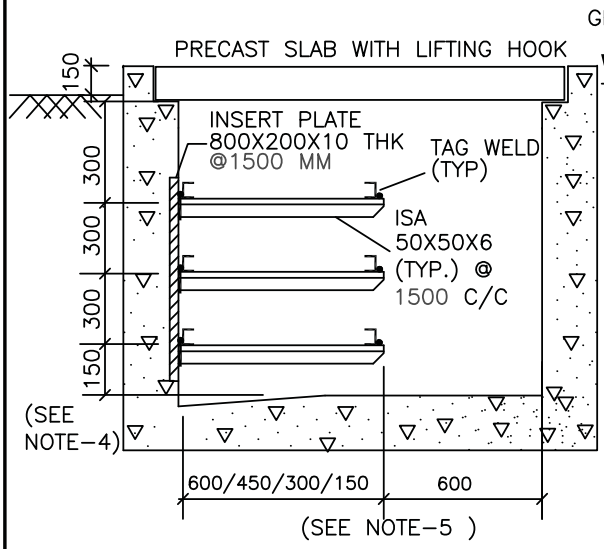

TYPE – B

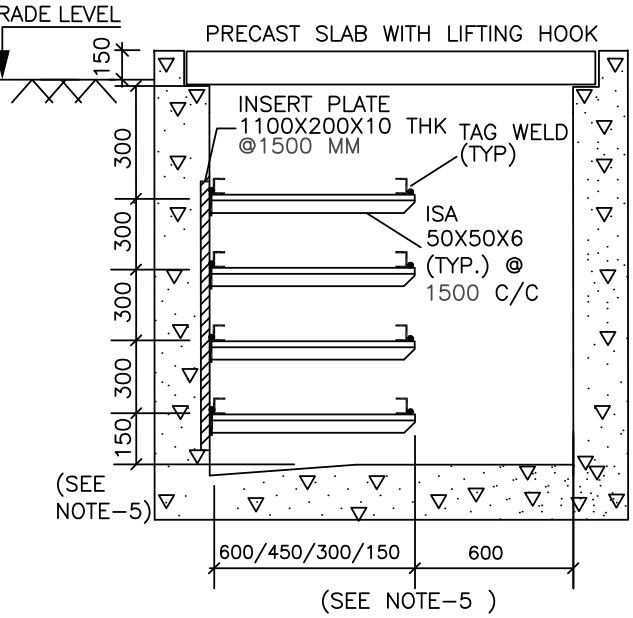

TYPE – C

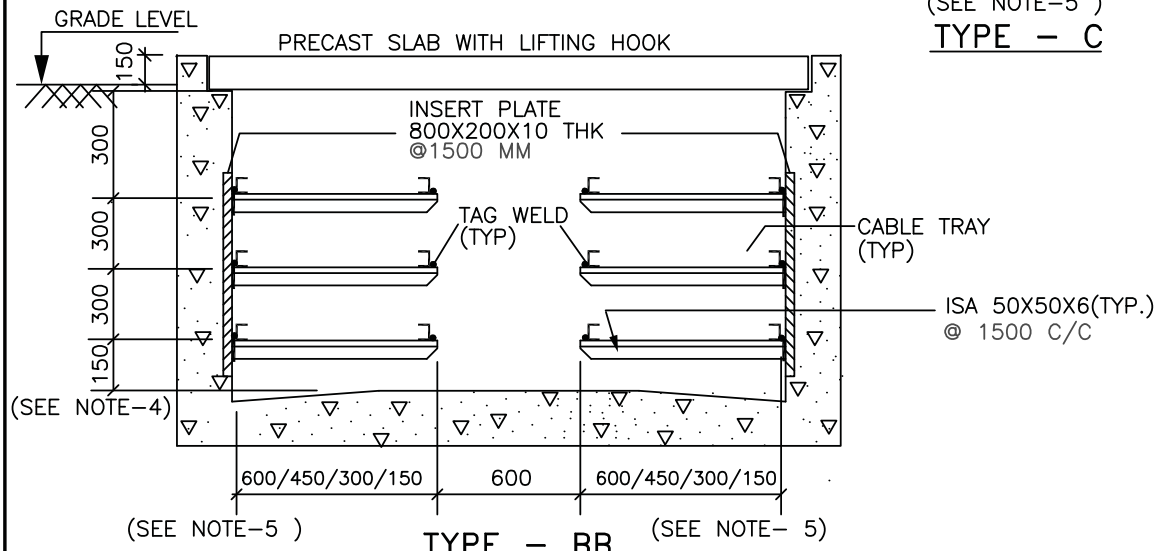

TYPE – BB

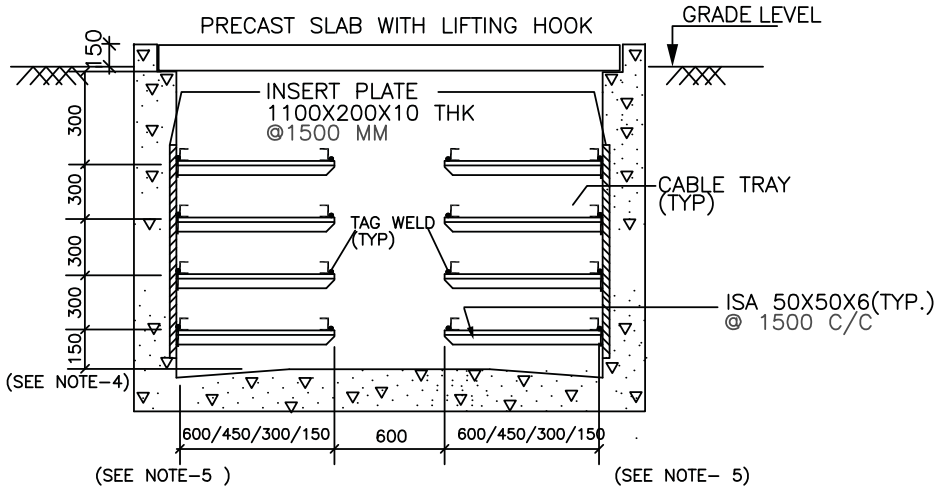

TYPE – CC

MOUNTING ARRANGEMENT IN CABLE TRENCH (SEE NOTE 5)

FOR GENERAL NOTES REFER SHEET 15 OF 15

TYPICAL CABLING ARRANGEMENT DETAILS	DWG. NO. PE-DG-511-507-E006
	REV. 01 SHT. 08 OF 15

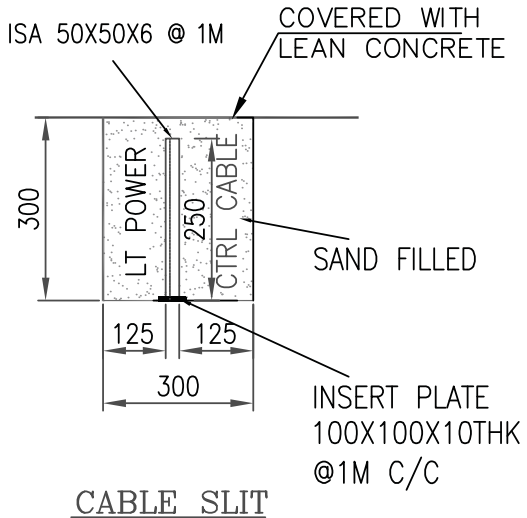

CABLE SLIT
300W x 300D

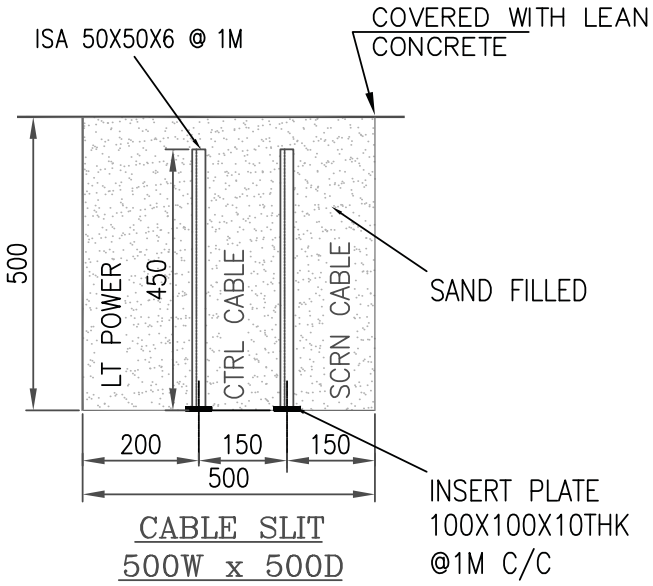

CABLE SLIT
500W x 500D

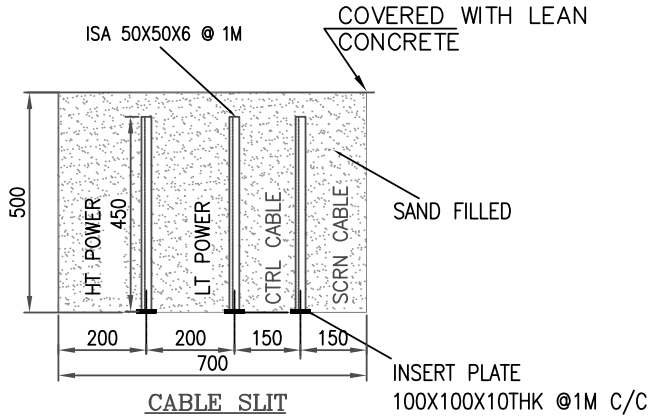

CABLE SLIT
500W x 500D

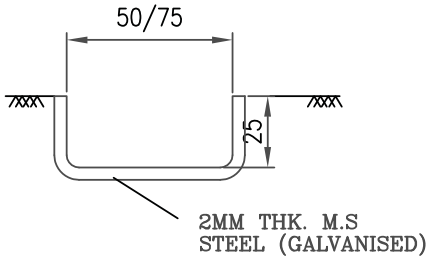

CABLE TROUGHS USED FOR BRANCHING OUT FROM MAIN CABLE ROUTE

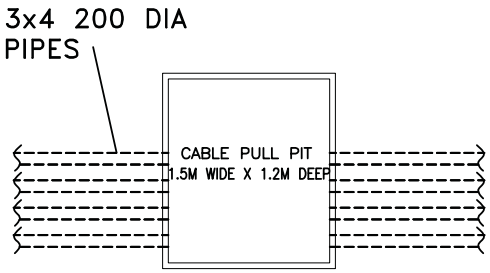

PLAN VIEW

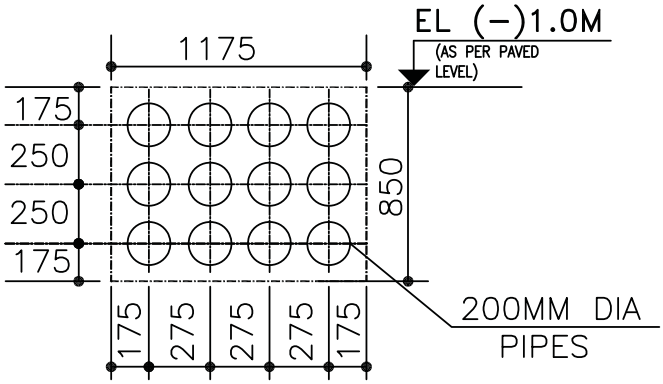

ELEVATION VIEW

TYPICAL PULL PIT/DUCT BANK ARRANGEMENT AT ROAD CROSSING

FOR GENERAL NOTES REFER SHEET 15 OF 15

TYPICAL CABLING ARRANGEMENT DETAILS	DWG. NO. PE-DG-511-507-E006
	REV. 01 SHT. 09 OF 15

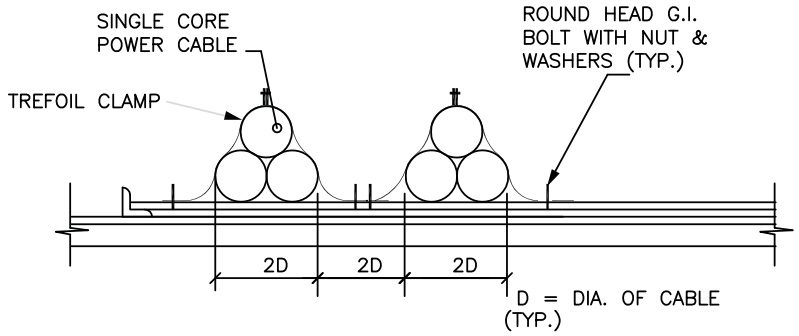

CABLE CLAMPS IN TREFOIL FORMATION
FOR SINGLE CORE POWER CABLES

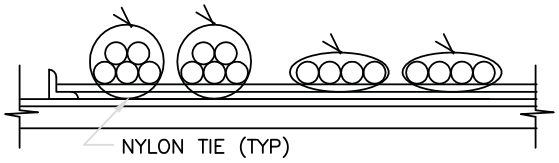

CLAMPING ARRANGEMENT
OF POWER CABLES(MAX. EIGHT NOS)

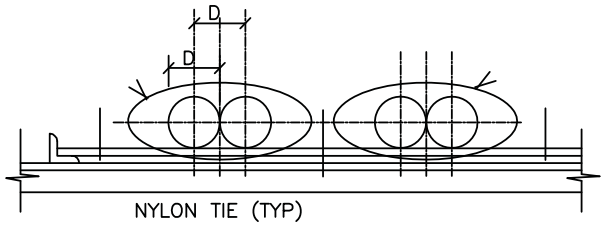

CABLE CLAMPS FOR
MULTICORE POWER CABLES
TOUCHING

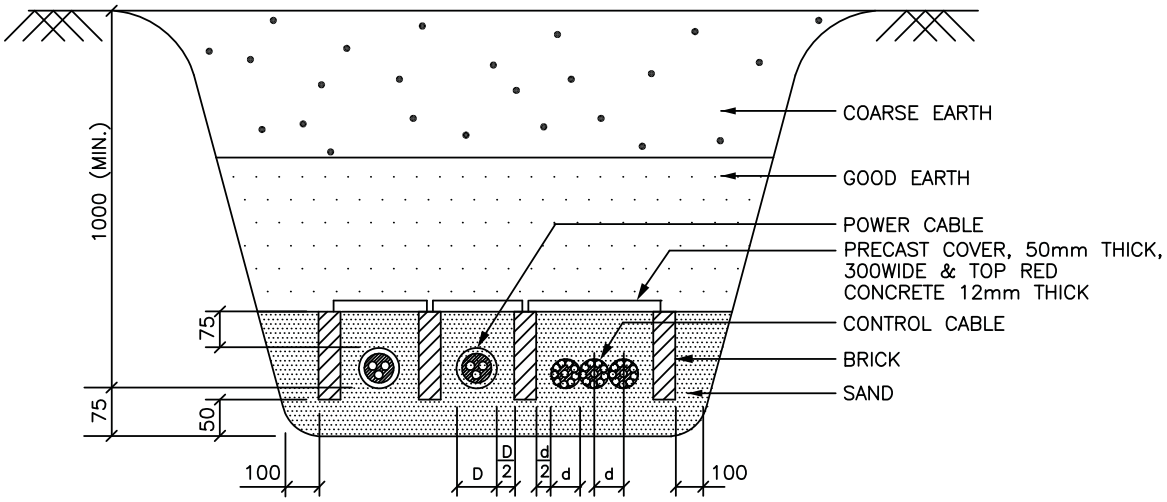

BURIED CABLE LAYING DETAILS

FOR GENERAL NOTES REFER SHEET 15 OF 15

TYPICAL CABLING ARRANGEMENT DETAILS	DWG. NO. PE-DG-511-507-E006
	REV. 01 SHT. 10 OF 15

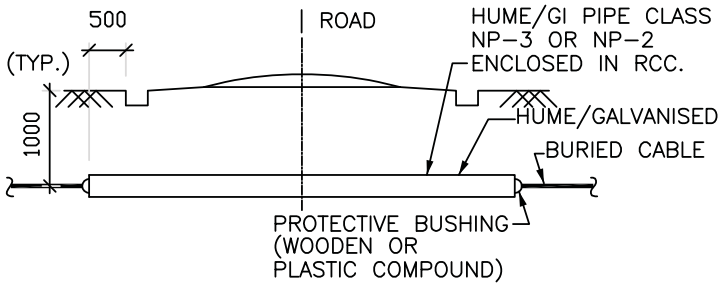

ROAD CROSSING
OF BURIED CABLE

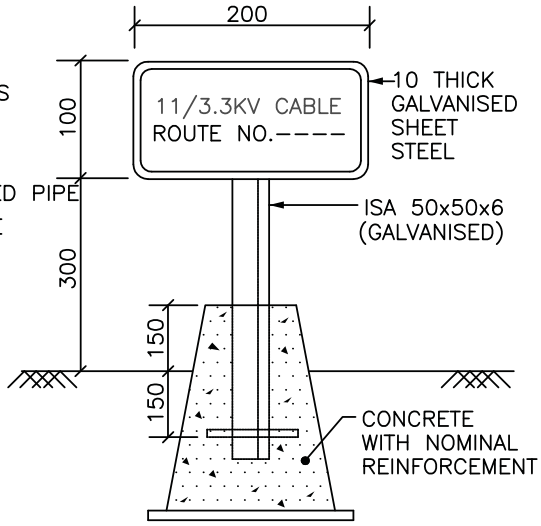

CABLE ROUTE MARKER

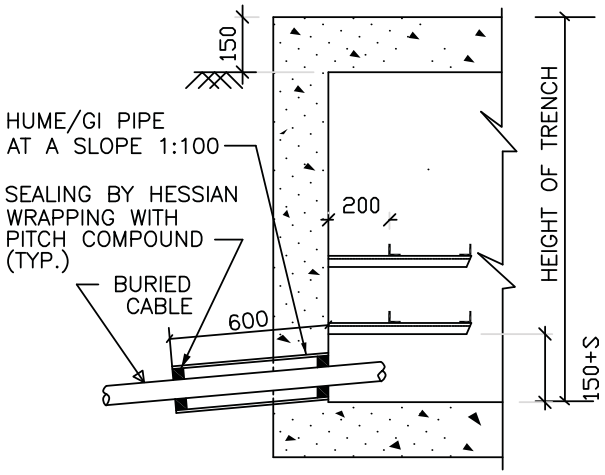

TYP. DETAILS OF BURIED CABLE
ENTRY TO BLDG. OR CABLE TRENCH

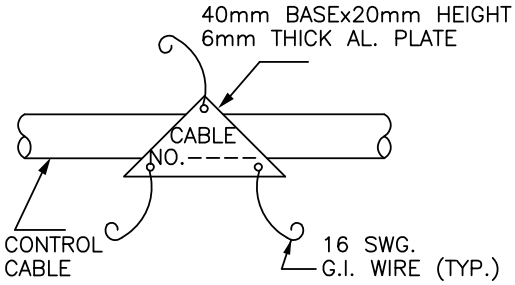

CABLE TAG
CONTROL CABLE

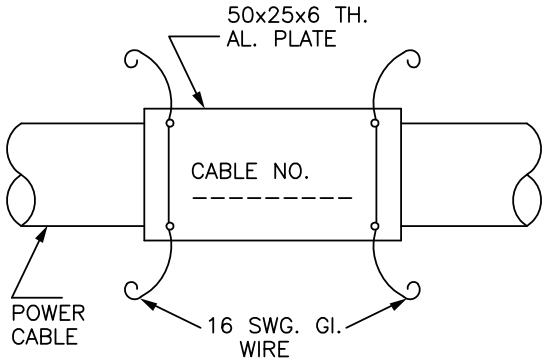

CABLE TAG
POWER CABLE

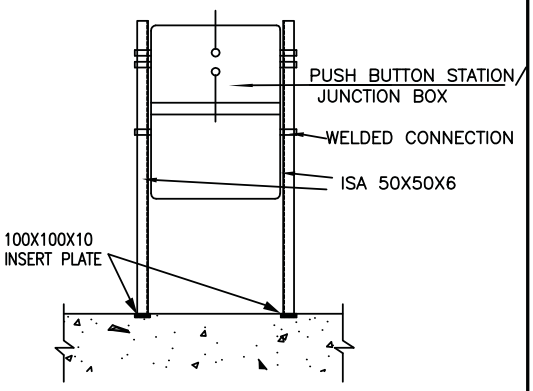

SUPPORT FOR PUSH BUTTON STATION

FOR GENERAL NOTES REFER SHEET 15 OF 15

TYPICAL CABLING ARRANGEMENT DETAILS	DWG. NO. PE-DG-511-507-E006
	REV. 01 SHT. 11 OF 15

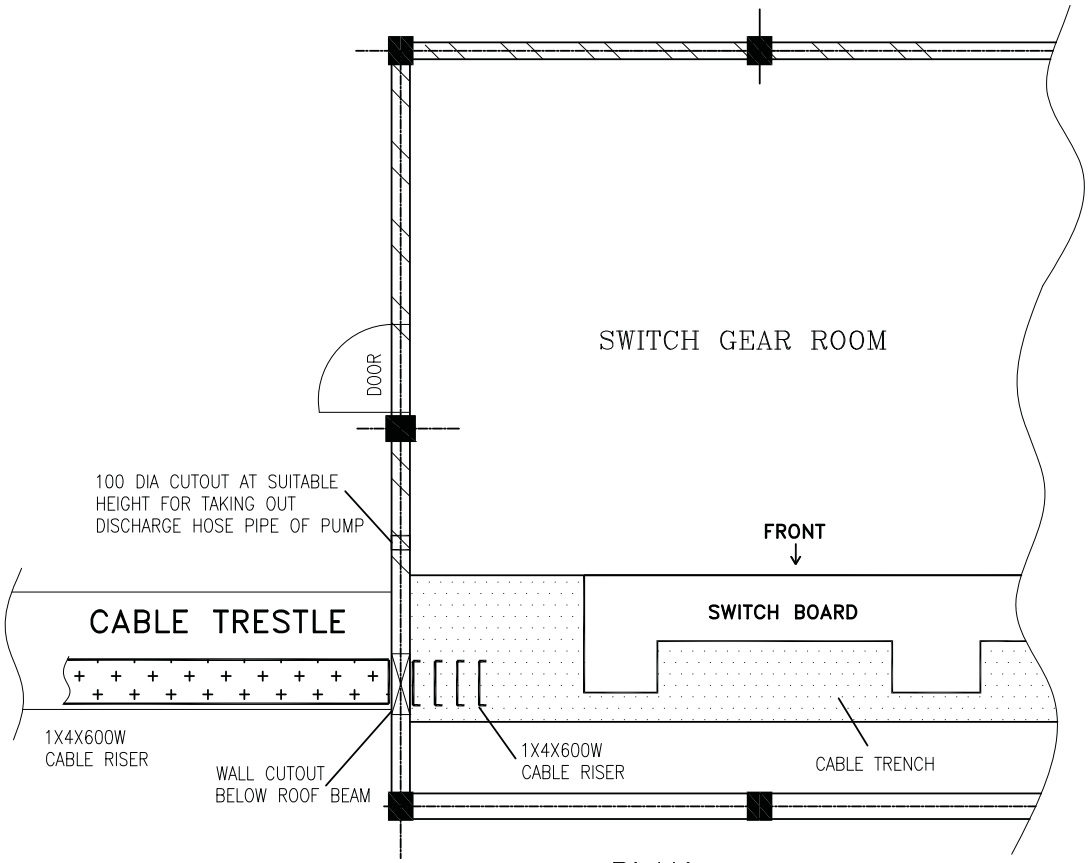

PLAN

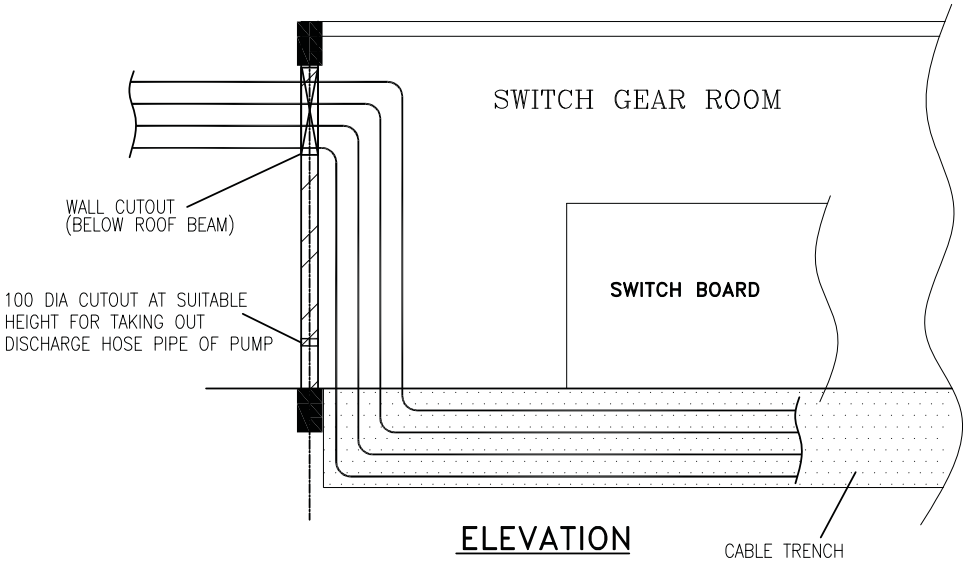

ELEVATION

TYP. SECTION OF OVERHEAD CABLE ENTRY TO BOP AREA BUILDING

FOR GENERAL NOTES REFER SHEET 15 OF 15

TYPICAL CABLING ARRANGEMENT DETAILS	DWG. NO. PE-DG-511-507-E006
	REV. 01 SHT. 12 OF 15

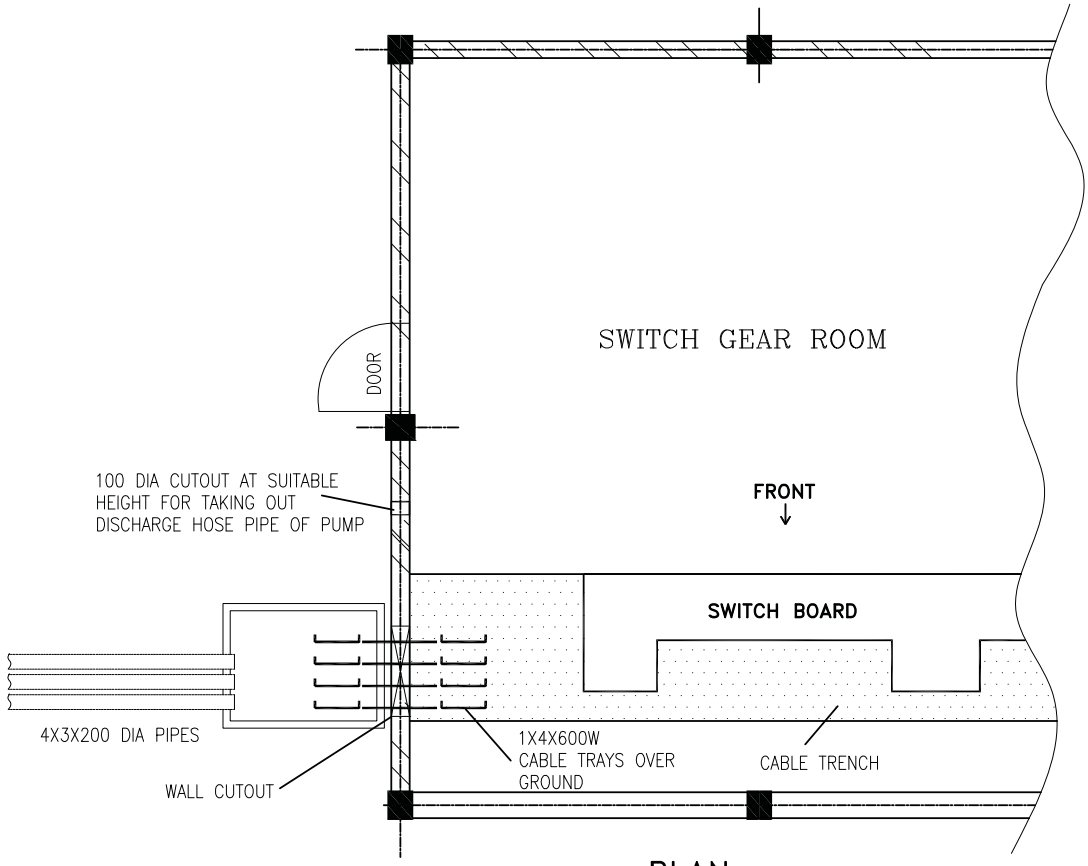

PLAN

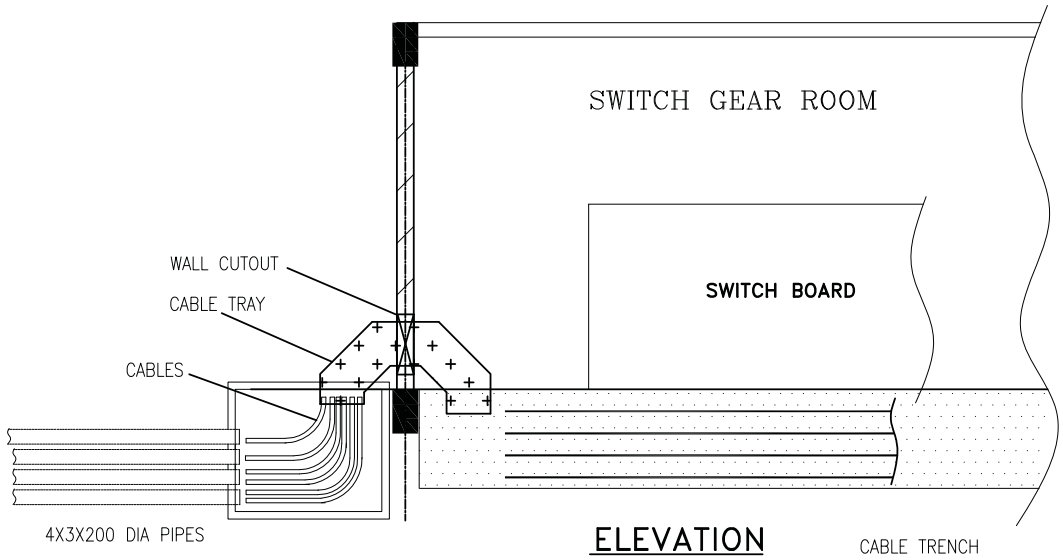

ELEVATION

TYP. SECTION OF CABLE ENTRY FROM CABLE PULL PIT TO BOP AREA BUILDING

FOR GENERAL NOTES REFER SHEET 15 OF 15

TYPICAL CABLING ARRANGEMENT DETAILS	DWG. NO. PE-DG-511-507-E006
	REV. 01 SHT. 13 OF 15

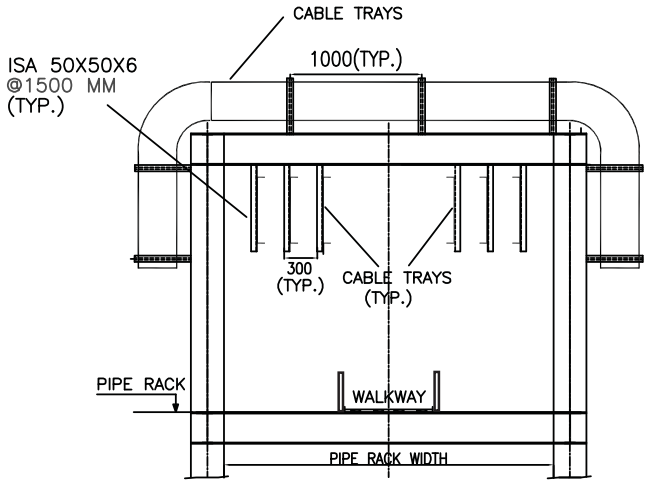

TYPICAL VERTICALLY ORIENTED TRAY
SUPPORT ARRANGEMENT ALONG PIPERACK

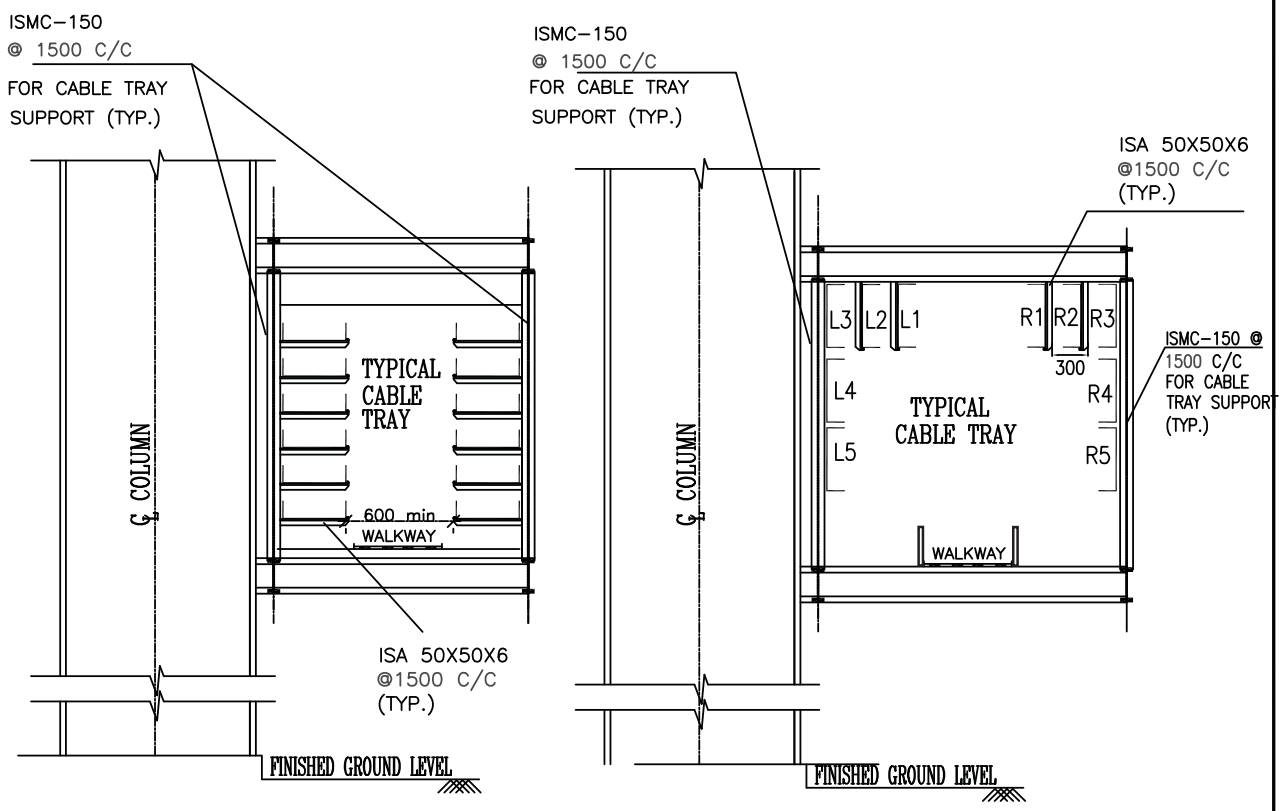

MOUNTING ARRANGEMENT FOR TRAYS ON TRESTLE

FOR GENERAL NOTES REFER SHEET 15 OF 15

TYPICAL CABLING ARRANGEMENT DETAILS	DWG. NO. PE-DG-511-507-E006
	REV. 01 SHT. 14 OF 15

NOTES:–

1. ALL DIMENSIONS SHOWN ARE IN MM.
2. CABLE TRAYS SHALL BE SUPPORTED @ 1.5M FOR HORIZONTAL RUNS & @ 1M FOR VERTICAL RUNS I.E. CABLE TRAY RISERS.
3. CABLE TRAYS SUPPORTING STRUCTURE SHALL BE FABFRICATED AT SITE OUT OF HOT–DIP GALVANISED STRUCTURAL MEMBERS (ISMC/ISA) AS PER REQUIREMENT. AND SHALL BE WELDED TO STRUCTURAL STEEL(WHERE AVAILABLE), OR INSERT PLATES PROVIDED ALONG FLOOR SURFACES/WALLS/BOTTOM OF CEILING.
4. MINIMUM DEPTH REQUIREMENTS FOR TRENCHES ARE INDICATED. SLOPE DETAILS SHALL BE TAKEN CARE OF IN CIVIL DRAWING.
5. CABLE TRENCH TYPES SHALL BE AS UNDER:–

   a)TYPE–A – DOUBLE TRAYS, SINGLE SIDE
   b)TYPE–AA – DOUBLE TRAYS, BOTH SIDES
   c)TYPE–B – THREE TRAYS, SINGLE SIDE
   d)TYPE–BB – THREE TRAYS, BOTH SIDES
   e)TYPE–C – FOUR TRAYS, SINGLE SIDE
   f)TYPE–CC – FOUR TRAYS, BOTH SIDES

6. GALVANISATION DAMAGED DUE TO WELDING SHALL BE MADE GOOD WITH APPLICATION OF COLD GALVANISING PAINT.
7. NUMBER OF TIERS ARE VARIABLE AS PER THE REQUIREMENT & SHALL BE SHOWN IN RESPECTIVE CABLING LAYOUT DRAWINGS.
8. CABLE TRAYS SHALL GENERALLY BE INSTALLED IN HORIZONTAL ORIENTATION. IN AREAS SUSCEPTIBLE TO COAL/ASH DUST DEPOSITION (E.G OVERHEAD CABLING PATHS IN BOILER AREA, TRAYS BELOW BOILER PLATFORMS ETC.) CABLE TRAYS SHALL BE INSTALLED IN VERTICAL ORIENTATION.
9. CABLE TRAYS SHALL BE TAG WELDED TO SUPPORTING HORIZONTAL ARM BRACKET ISA 50X50X6.
10. CABLE TAGS SHALL BE FIXED AT TERMINAL ENDS, AT TRAY INTERSECTION / BEND AND AT EACH SIDE OF FLOOR/WALL/DUCT CROSSINGS ETC. AND AT EVERY 30M IN CABLE TRENCH/TRAY OR BURIED RUN.
11. BURIED CABLE ROUTES SHALL HAVE MARKER PROJECTING 150MM ABOVE GROUND AND SHALL BE SPACED AT AN INTERVAL OF 30M ALONG THE ROUTE & AT EVERY BEND.
12. IN CASE OF BURIED CABLES, CABLE MARKERS SHALL ALSO BE PROVIDED AT THE LOCATION OF CABLE JOINTS WITH AN INSCRIPTION "CABLE JOINT"

TYPICAL CABLING ARRANGEMENT DETAILS	DWG. NO. PE–DG–511–507–E006
	REV. 01 SHT. 15 OF 15

ANNEXURE III

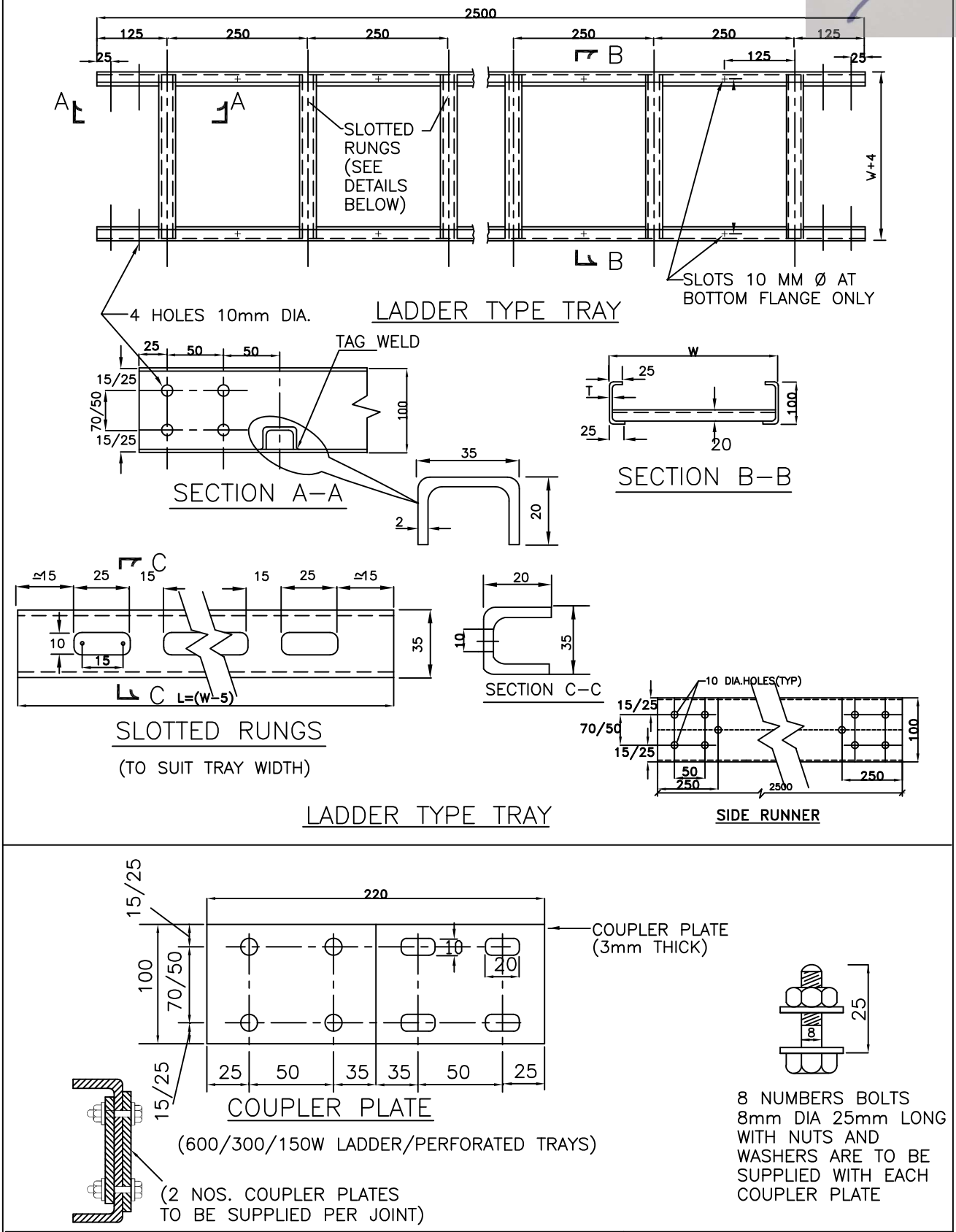

बीएचईएल BHEL	TYPICAL DETAILS OF CABLE TRAYS AND ACCESSORIES	DRAWING NO. PE–DG–508–507–E005
		SH 2 OF 12 | REV 00

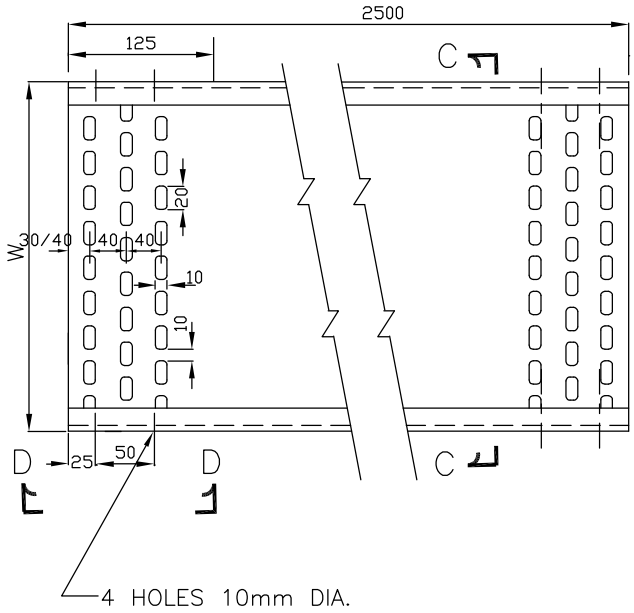

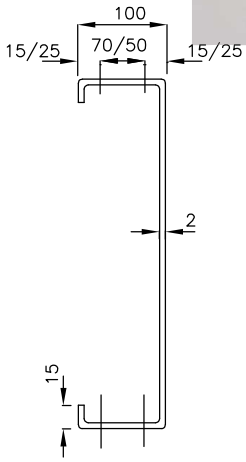

SECTION–CC

600/300/150 TRAYS

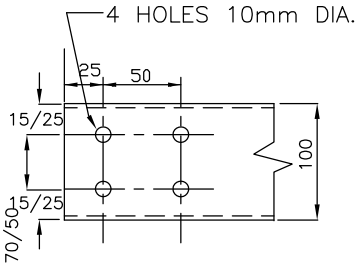

SECTION–DD

600/300/150 TRAYS

PERFORATED TYPE TRAY

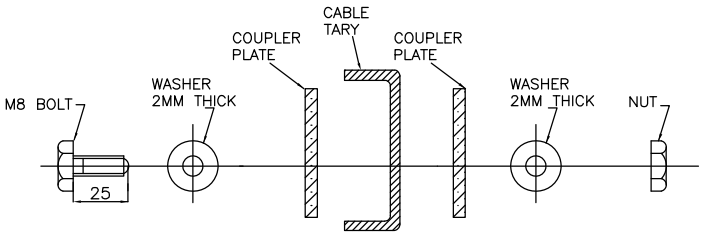

SEQUENCE OF M8 BOLT, WASHER, NUT, COUPLER PLATE & CABLE TRAY

FOR TYPICAL CABLE TRAY JOINT

SEE GENERAL NOTES IN SHEET 12.

बीएचईएल BHEL	TYPICAL DETAILS OF CABLE TRAYS AND ACCESSORIES	DRAWING NO. PE–DG–508–507–E005
		SH 3 OF 12 | REV 00

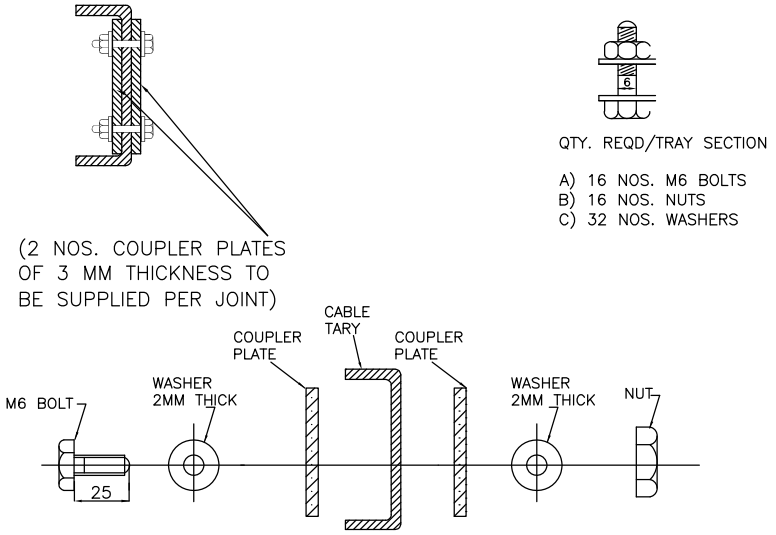

SEQUENCE OF M6 BOLT, WASHER, NUT, COUPLER PLATE & CABLE TRAY

FOR TYPICAL CABLE TRAY JOINT

SEE GENERAL NOTES IN SHEET 12.

बीएचईएल BHEL	TYPICAL DETAILS OF CABLE TRAYS AND ACCESSORIES	DRAWING NO. PE-DG-508-507-E005
		SH 4 OF 12 | REV 00

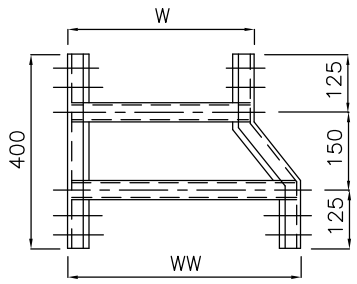

LEFT HAND REDUCER

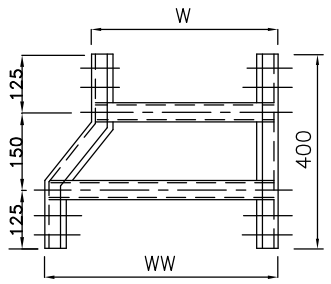

RIGHT HAND REDUCER

WW	W	DEPTH
600	300	100
600	150	100
300	150	100

LADDER TYPE

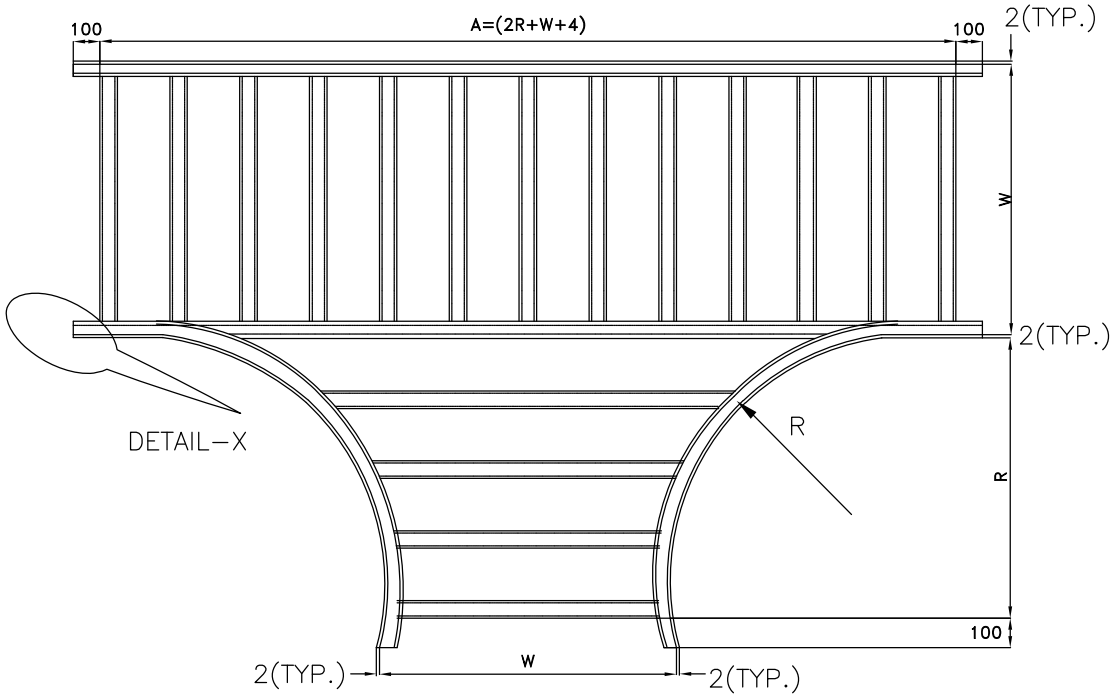

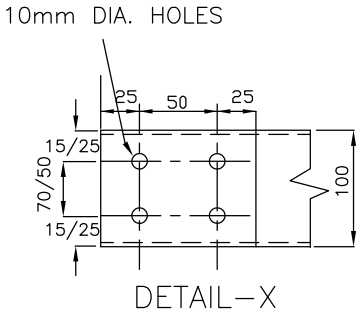

WIDTH W	BENDING RADIUS R	DEPTH	A		
			W		
			150	300	600
150, 300 & 600	600	100	1354	1504	1804

SEE GENERAL NOTES IN SHEET 12.

LADDER TYPE

बीएचईएल BHEL

TYPICAL DETAILS OF
CABLE TRAYS AND ACCESSORIES

DRAWING NO.
PE–DG–508–507–E005

SH 5 OF 12 | REV 00

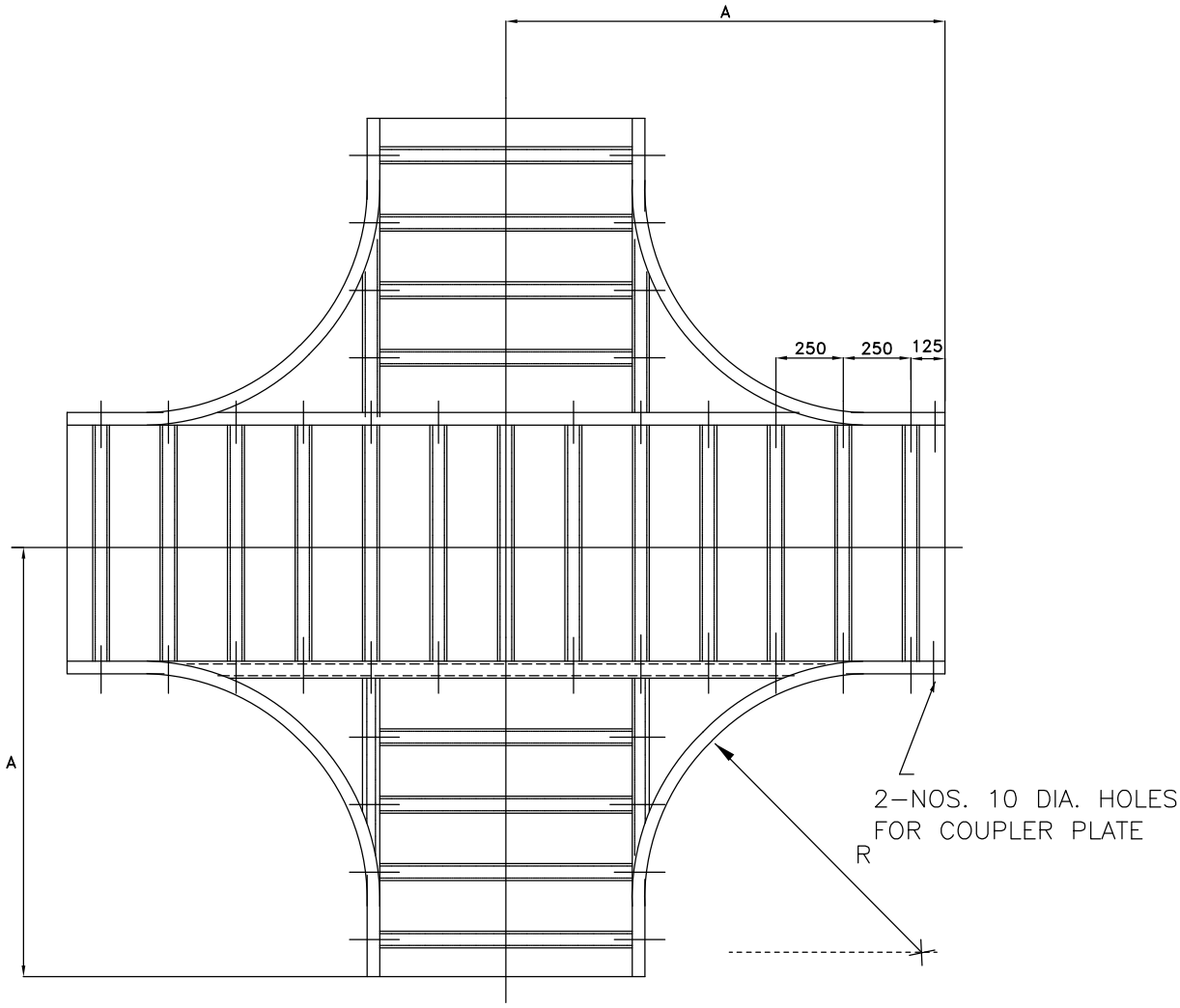

HORIZONTAL CROSS-PLAN

WIDTH W	BENDING RADIUS R	A=R+W/2+100
600	600	1000
300	600	850

SEE GENERAL NOTES IN SHEET 12.

बीएचईएल BHEL	TYPICAL DETAILS OF CABLE TRAYS AND ACCESSORIES	DRAWING NO. PE-DG-508-507-E005
		SH 6 OF 12 / REV 00

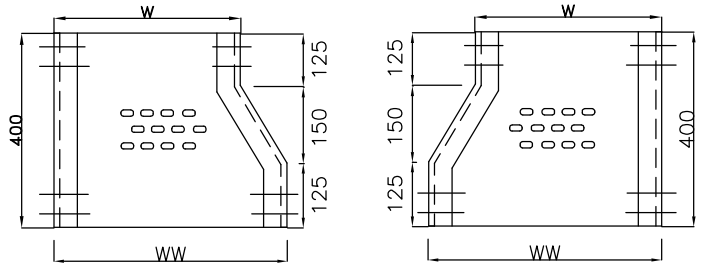

LEFT HAND REDUCER RIGHT HAND REDUCER

PERFORATED TYPE

WW	W	DEPTH
600	300	100
600	150	100
300	150	100

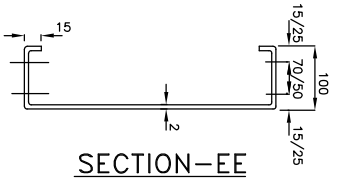

SECTION–EE

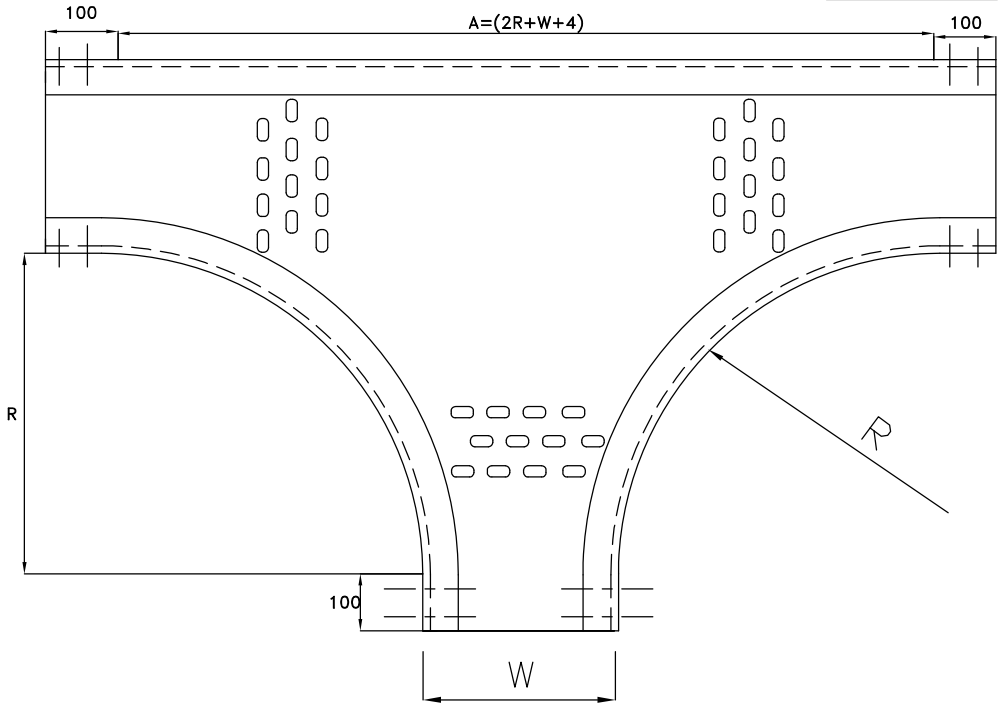

TEE

WIDTH W	BENDING RADIUS R	DEPTH	A		
			W		
			150	300	600
150, 300 & 600	600	100	1354	1504	1804

SEE GENERAL NOTES IN SHEET 12.

PERFORATED TYPE

बीएचईएल BHEL

TYPICAL DETAILS OF CABLE TRAYS AND ACCESSORIES

DRAWING NO.

PE–DG–508–507–E005

SH 7 OF 12 REV 00

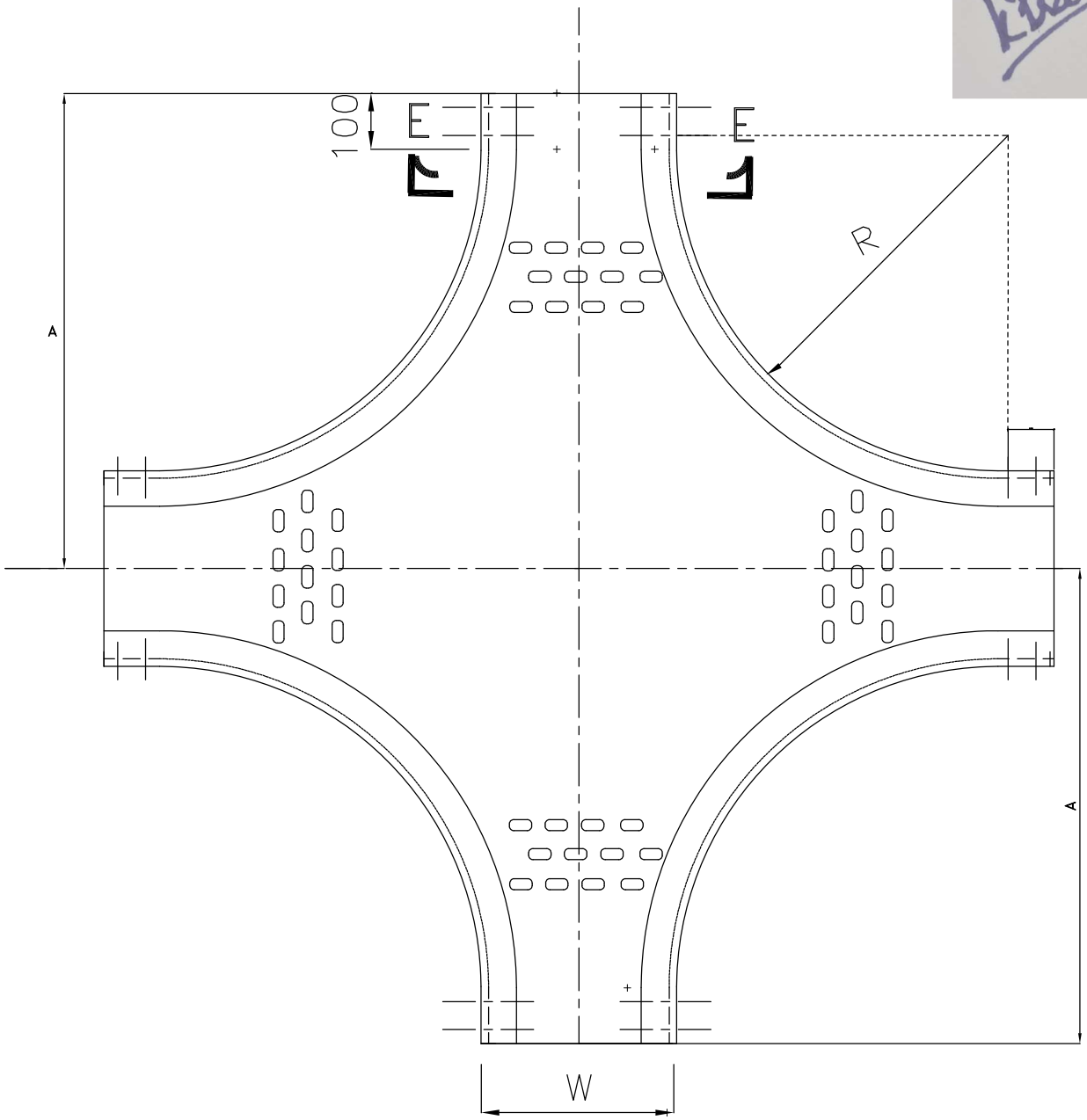

CROSS

WIDTH W	BENDING RADIUS R	A=R+W/2+100
600	600	1000
300	600	850

SEE GENERAL NOTES IN SHEET 12.

बीएचईएल BHEL	TYPICAL DETAILS OF CABLE TRAYS AND ACCESSORIES	DRAWING NO. PE-DG-508-507-E005
		SH 8 OF 12 / REV 00

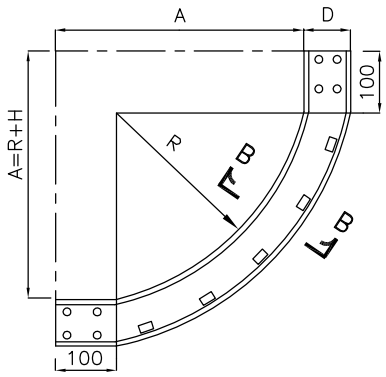

INSIDE TYPE

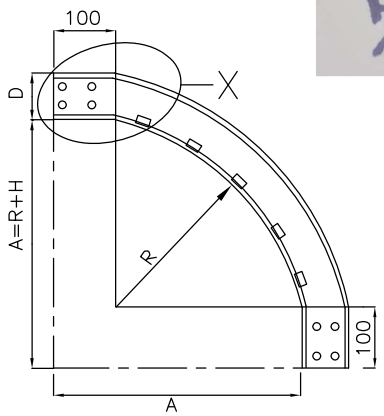

OUTSIDE TYPE

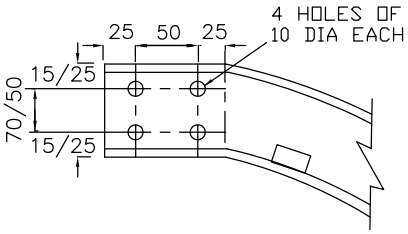

ENLARGED VIEW OF "X"

VERTICAL ELBOW 90 DEG UP/DOWN

INSIDE WIDTH W	BENDING RADIUS R	DEPTH	A
600, 300 & 150	600	100	700

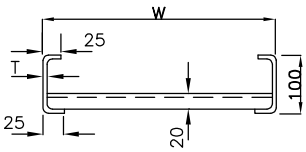

SECTION B–B

90° VERTICAL BEND – LADDER TYPE

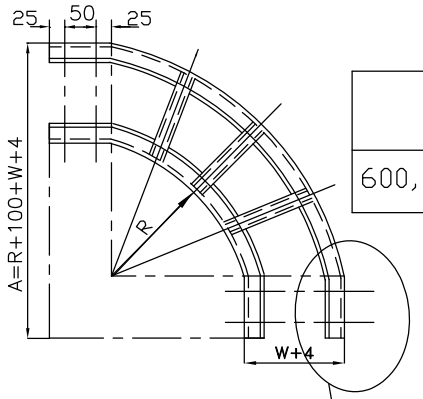

LADDER TYPE

X (AS ABOVE)

HORIZONTAL ELBOW 90 DEG

INSIDE WIDTH W	BENDING RADIUS R	DEPTH	A		
			W		
			150	300	600
600, 300 & 150	600	100	854	1004	1304

90° HORIZONTAL BEND – LADDER TYPE

SEE GENERAL NOTES IN SHEET 12.

भेल BHEL	TYPICAL DETAILS OF CABLE TRAYS AND ACCESSORIES	DRAWING NO. PE–DG–508–507–E005
		SH 9 OF 12 / REV 00

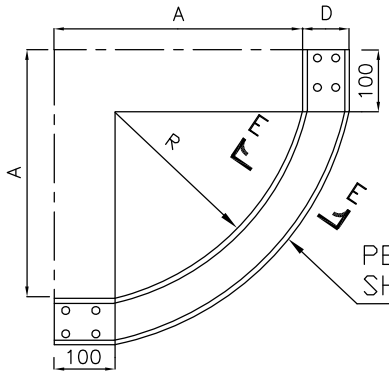

INSIDE TYPE

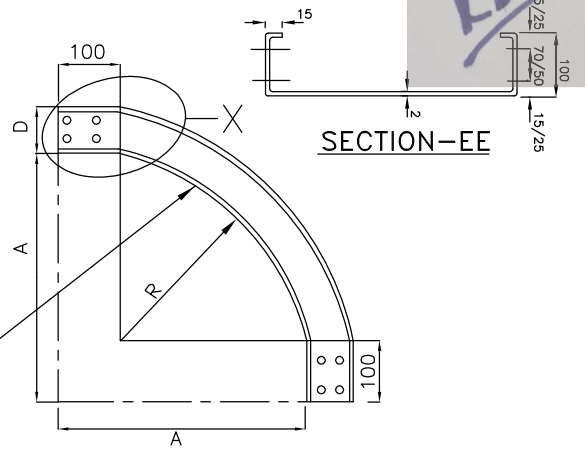

SECTION–EE

PERFORATED SHEET

OUTSIDE TYPE

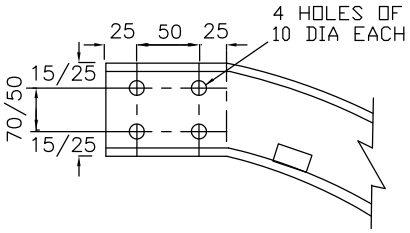

ENLARGED VIEW OF "X"

VERTICAL ELBOW 90 DEG UP/DOWN

INSIDE WIDTH W	BENDING RADIUS R	DEPTH	A
600, 300 & 150	600	100	700

90° VERTICAL BEND – PERFORATED TYPE

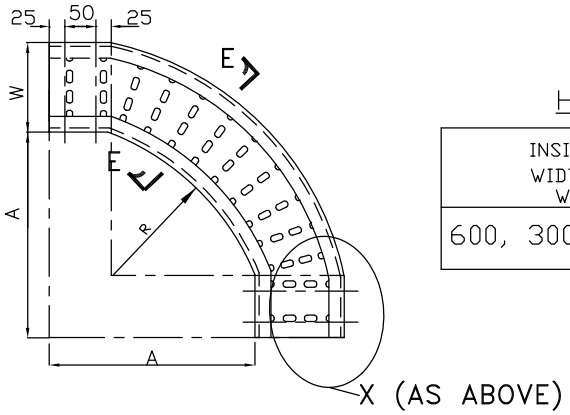

HORIZONTAL ELBOW 90 DEG

INSIDE WIDTH W	BENDING RADIUS R	DEPTH	A		
			W		
			150	300	600
600, 300 & 150	600	100	854	1004	1304

90° HORIZONTAL BEND – PERFORATED TYPE

SEE GENERAL NOTES IN SHEET 12.

बीएचईएल BHEL	TYPICAL DETAILS OF CABLE TRAYS AND ACCESSORIES	DRAWING NO. PE–DG–508–507–E005
		SH 10 OF 12 | REV 00

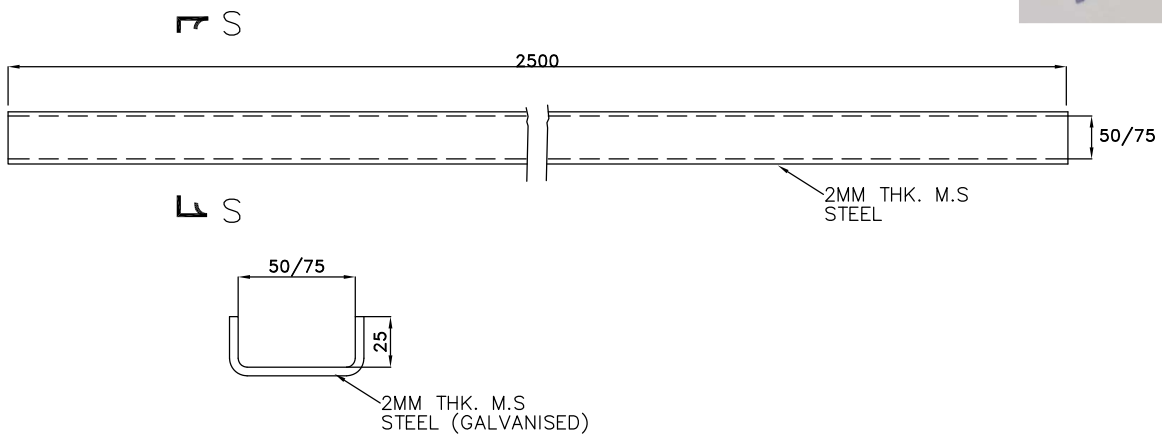

SECTION S–S

CABLE TROUGHS

SEE GENERAL NOTES IN SHEET 12.

TYPICAL DETAILS OF CABLE TRAY AND ACCESSORIES	BHEL DRAWING NO. PE–DG–508–507–E005	
	SH 11 OF 12	REV 00

NOTES:-

1. THE CABLE TRAYS AND ACCESSORIES SHALL BE MADE OF 2mm HOT ROLLED M.S.SHEET CONFIRMING TO IS:1079. ALL THE COUPLER PLATE SHALL BE OF 3 MM THICK.
2. THE CABLE TRAYS AND ACCESSORIES SHALL BE HOT DIP GALVANISED AS PER IS 2629.
3. FOR LADDER TYPE CABLE TRAYS AND ACCESSORIES, ALL RUNGS SHALL BE SLOTTED.
4. PERFORATED TRAYS SHALL BE FABRICATED OUT OF A SINGLE M.S. SHEET.
5. THE DIMENSIONS OF ALL BENDS, TEES, CROSSES, ETC. FOR PERFORATED CABLE TRAYS SHALL BE THE SAME AS FOR LADDER TYPE TRAY FITTINGS.
6. SIDE CHANNELS OF PERFORATED TRAY ACCESSORIES SHALL BE WELDED WITH THE PERFORATED SHEET AT INTERVALS OF 100mm.
7. LENGTH OF WELDING SHALL NOT BE LESS THAN 25mm. WELDING SHALL BE AS PER IS 9595.
8. PREFERABALY SINGLE MS PERFORATED SHEET SHALL BE USED AS BASE OF ALL PERFORATED TYPE TRAY ACCESSORIES. HOWEVER, IF USE OF PIECES OF PERFORATED SHEET IS UNAVIODABLE FOR BASE, PIECES SHALL BE WELDED WITH EACH OTHER IN LINE WITH THE ABOVE.
9. ALL TRAY CORNERS SHALL BE FREE OF SHARP EDGES & SMOOTH.
10. THE DEPTH, WIDTH AND LENGTH OF TRAYS AND ACCESSORIES SHALL BE WITHIN A TOLERANCE OF +/-2MM.
11. TO FACILITATE ASSEMBLY, ALL ACCESSORIES AT ENDS SHALL HAVE 100mm STRAIGHT PORTION.
12. ALL NUTS, BOLTS, WASHERS ETC., SHALL BE HOT DIP GALVANISED AS PER IS 1367 FOR SIZES ABOVE 12MM AND ELECTROPLATED/ELECTROGALVANISED FOR SIZES UPTO 12MM.
13. ALL DIMENSIONS ARE IN mm UNLESS NOTED OTHERWISE.
14. TRAY ACCESSORIES SHOWN IN THIS DRAWING SHALL BE FACTORY FABRICATED FOR USE AT SITE AS PER APPROVED LAYOUT DRAWINGS. FOR SPECIFIC SITE REQUIREMENTS (E.G. IRREGULAR ANGLE BENDS SUCH AS 30°/60° BENDS, ETC) AS PER SITE LAYOUT CONDITIONS, TRAY ACCESSORIES SHALL BE FABRICATED AT SITE FROM THE STRAIGHT LENGHT OF RESPECTIVE SIZES AS REQUIRED. GALVANISATION DAMAGED DURING CUTTING/WELDING OPEARTIONS SHALL BE BRUSHED AND RED LEAD PRIMER, OIL PRIMER AND ALUMINIUM PAINT SHALL BE APPLIED BEFORE INSTALLATION OF THE ACCESSORIES.
15. WIDTH OF CABLE TRAYS PROPOSED TO BE USED FOR PROJECT ARE AS UNDER :
    LADDER TYPE CABLE TRAY (MM) : 600,300 & 150.
    PERFORATED TYPE CABLE TRAY (MM) : 600,300,150.
16. 600MM WIDE CABLE TRAY SHALL BE SUITABLE FOR WEIGHT OF 100KG/M INCLUDING LIVE LOAD OF RUNNING LENGTH OF CABLE TRAY.
17. MAKE OF ALL ITEMS SHALL BE AS PER NTPC QA APPROVAL.
18. CABLE TROUGHS OR 50/75MM WIDE PERFORATED TYPE SHALL BE USED FOR LOCAL CABLING/BRANCHING OUT FEW CABLES FROM MAIN ROUTE.
19. AMOUNT OF ZN DEPOSIT OVER THREADED PORTION OF BOLTS, NUTS, SCREWS AND WASHERS SHALL BE AS PER IS 1367.
20. MASS OF ZN COATING SHALL BE 610gm PER SQ METER.

भेल BHEL	TYPICAL DETAILS OF CABLE TRAYS AND ACCESSORIES	DRAWING NO. PE-DG-508-507-E005
		SH 12 OF 12 | REV 00

TECHNICAL SPECIFICATION OF CABLE GLANDS AND LUGS

Cable glands shall conform to BS:6121. Cable glands shall be made of heavy duty brass machine finished and nickel chrome plated. Thickness of plating shall not be less than 10 micron. All washers and Hardware shall also be made of brass with nickel chrome plating. Rubber components shall be of neoprene or better synthetic material and of tested quality.

Cable lugs/ferrules shall be solderless crimping type suitable for power and control cables as per the DIN 46239. Aluminium solderless crimping lugs/ ferrules shall be used for Aluminium cables and Copper lugs/ferrules shall be used for Copper cables. Bimetallic washers or bimetallic type lugs shall be used for bimetallic connections

1.0 LIGHTING SYSTEM DESIGN:

1.1 The illumination system shall be designed to ensure uniform, reliable, aesthetically pleasing and glare free illumination. The lighting fixtures shall be designed for minimum glare. The finish of the fixtures shall be such that no bright spots are produced either by direct light source or by reflection. The diffusers/ louvers used in fixtures shall be made of impact resistant polystyrene sheet and shall have no yellowing property over a prolonged period.

1.2 All fixtures shall be of a proven design for applications in power plant environment.

1.3 **LED LUMINAIRES**

LED Luminaires shall be used for the lighting of all the indoor & outdoor areas. LED luminaires shall be surface mounting type.

The individual lamp wattage for LED shall be min 3 watt. Fractional wattage LEDs can also be provided. The LED chip efficacy shall be min 120 Lm/W. The luminaire efficacy shall be not less than 100 Lm/W. Suitable heat sink shall be designed & provided in the luminaire. The LED used in the luminaires shall have colour rendering index (CRI) of Min 80. Colour designation of LED shall be " cool day light" (min 5700K) type for indoor areas.For outdoor areas, the colour temperature of LED shall be min. 4000K, including rough & dust prone areas. LED shall conform to the LM 80 requirements.

The max. junction temperature of LED shall be 85 deg C. Further the lumen maintenance at this temperature shall be min 90%. The THD of LED Luminaires shall be less than 10%. Further the EMC shall be as per IS 14700. The power factor of the luminaire shall not be less than 0.9. The marking on luminaire & safety requirements of luminaire shall be as per IS standards. Suitable heat sink with proper thermal management shall be designed & provided in the luminaire.

The connecting wires used inside the system, shall be low smoke halogen free, fire retardant type and fuse protection shall be provided in input side specifically for LED luminaire.

Care shall be taken in the design that there is no water stagnation anywhere in the housing of the luminaire. The entire housing shall be dust and water proof protection as per IS 12063.

1.4 **DRIVER CIRCUIT-**

LED driver shall be integral type. LED modules and drivers shall be compatible to each other. The LED module driver's ratings and makes shall be as recommended by corresponding LED chip manufacturer.
LED drivers shall have following control & protection:

(i) Suitable precision current control of LED
(ii) Open circuit protection
(iii) Short circuit protection
(iv) Over temperature protection
(v) Overload protection
(vi) Surge Protection

1.5 The lighting fixtures in the plant area shall be group controlled from lighting panel. Lighting panel (LP) shall be provided with synchronous timer with additional provision to bypass the timer.

1.6 All outdoor fixtures shall be weather proof and of min. IP65 degree of protection.

1.7 Junction box for lighting shall be made of fire-retardant material. Material of JB shall be thermoplastic or thermosetting or FRP type. Degree of protection shall be IP55.

1.8 **LIGHTING PANELS-**

Lighting panels shall be constructed out of 2 mm thick CRCA sheet steel. The door shall be hinged and the panel shall be gasketted to achieve specified degree of protection. Lighting panels shall be powder coated with color shade RAL9002. Lighting panels shall have min. IP55 degree of protection.

All MCBs/Isolators/Switches/Contactors etc. shall be mounted inside the panel and a fibre glass sheet shall be provided inside the main door such that the operating knobs of MCBs etc., shall project out of it for safe operation against accidental contact.

Terminal bocks shall be 1100 V grade, clip-on stud type, made up of polymide 6.6 or better suitable for terminating multicore stranded aluminium conductor incoming cable and 10 Sq. mm. stranded aluminium conductor for each outgoing circuits voltage. All terminals shall be shrouded, numbered and provided with identification strip for the feeders.

MCB's shall be current limiting type with magnetic and thermal release suitable for manual closing and automatic tripping under fault condition. MCB's shall have short circuit interrupting capacity of 9 KA rms. MCB knob shall be marked with ON/OFF indication. A trip free release shall be provided to ensure tripping on fault even if the knob is held in ON position. MCB terminal shall be shrouded to avoid accidental contact.

Contactors of AC lighting panels shall be 3 no's,63 A, single pole continuous duty MCB, with neutral link,load make-break type suitable for 415 V, 3 phase 4 wire system.

Programmable Digital Timer shall be Electronic Astronomical Almanac Time switch with battery backup of min. TEN years, 4 Digit LED display, 24 hours range, manual override facility, 10 Amp 3 relay output, with NO/NC Contacts suitable for operation on 240V single phase AC supply.

Lighting Panels shall have 20% spare outgoing feeders.

2.0 ILLUMINATION DESIGN CALCULATION:

The following average illumination levels shall be achieved and guaranteed by the contractor after considering maintenance factor of not more than 0.6.

AVERAGE LUX LEVEL & TYPE OF FIXTURES			
S. NO.	LOCATION	AVERAGE LUX LEVEL	TYPE OF LIGHTING FIXTURES
1	AC Normal LIGHTING		
(i)	On equipment	150	LED Luminaire
(ii)	General area on fandeck	50	LED Luminaire
(ii)	Stairways and landings	100 Lux [minimum one (1) light fixture at each landing]	LED luminaire
(iii)	Building Periphery Lighting	10	LED Street Light fixture/ LED Luminaire

3.0 LIGHTING SYSTEM DESCRIPTION

Lighting system for IDCT will be provided with normal supply from lighting distribution boards / switchboard MCCs. AC Normal lighting will provide 100% illumination level and normally all AC lighting fixture shall remain 'ON' as long as normal AC supply is available.
AC Normal lighting fixtures are fed through a number of conveniently located AC Lighting panel (ACLP) which are fed from Lighting Distribution Board (LDB).

Each Lighting DB shall have 1x100% transformers. LDBs shall consist of dry type isolation transformer housed in LDB with proper separation from distribution panels.

AC normal lighting panel as per details given below is envisaged:

Incomer type: TPN MCB
Incomer rating: 63A
Outgoing feeder type: SP MCB
Outgoing feeder rating: 20A
Short circuit rating: 9kA
No. of outgoing feeders: 6/12/18 (as per loading requirement of the area where LP is installed)
On/off control: With synchronous timer (for outdoor LP)
20% spare outgoing feeders will be provided for lighting panels.

4.0 LOW VOLTAGE POWER SERVICES

4.1 Industrial receptacle: At least 01 no. 20A, 3-Pin, 240V AC industrial type receptacle with switch will be provided at suitable location for each IDCT. These receptacles will be controlled with a switch. Industrial receptacle will be fed from LP.
4.2 Welding receptacle: 63A, 3-phase, 415V AC welding receptacles with isolating switch will be provided at specific points near all major equipment and at an average distance of 50m (location will be decided during detailed engineering). Maximum 04 nos. receptacles will be fed through one feeder.
4.3 Receptacles boxes shall be fabricated out of 2 mm thick MS steel hot dip galvanized or of not less than 2.5 mm thick die-cast aluminium alloy or fabricated out of 2 mm thick CRCA sheet with electro static powder coating.
4.4. Welding receptacles shall be fed directly from nearest BHEL ACDB/MCC. (Feeder for same is to be specified in load data in format attached with this specification).

5.0 WIRING / CONDUITS

5.1 LDB to LP, cables shall be used. LP to downstream lighting system, wires shall be used. Wiring of lighting system will be done as follows:

(i) Wiring installation will be done by multi-stranded, PVC insulated, unsheathed, copper, colour coded wires laid in GI conduits conforming to IS-9537. Colour of the PVC insulation of wires shall be Red, Yellow, Blue, black for R, Y, and B phases & neutral respectively and white & grey for DC positive & DC negative circuits respectively.
(ii) Following sizes of 1100 V grade, PVC insulated, single core, stranded copper conductor wires will be used-
Lighting Panel to JBs: 2.5 sq. mm (Cu) wire
JBs to LED light fixtures: 1.5 sq. mm (Cu) wire
5.2 Welding receptacles shall be connected to BHEL ACDB/MCC by cable.

5.3 **Conduits-**

(i) Conduits will be heavy-duty type hot dip galvanised steel conforming to IS-9537 with 20 mm dia size (minimum). The thickness of conduits up to & including 25 mm dia will be 1.6 mm and conduits above 25 mm will be 2.0 mm.
Conduit accessories will be hot dip galvanised. In corrosive area, conduits will have suitable epoxy coating additionally.
(ii) Flexible conduits shall be water proof and rust proof made of electro galvanised mild steel strips and coated with PVC.
(iii) Conduits shall be threaded on both sides and thread length shall be protected by zinc rich paint.
(iv) Pull out boxes shall be provided at suitable interval in a conduit run. Boxes shall be suitable for mounting on Walls, columns, structures etc. Pull-out boxes shall have cover with screws and shall be provided with good quality gasket lining. Pull-out boxes used outdoors shall be weather proof type suitable for IP-55 degree of protection and those used indoor shall be suitable for IP-52 degree of protection. Pull-out boxes and its cover shall be hot dip galvanised.
(v) Filling area of wires in conduit shall not exceed 40% of the conduit area.
(vi) Lighting and receptacles will be fed from separate circuits. No two different phase circuits will be run in the same conduit. However, different circuits of same phase may be laid in the same conduit.

6.0 EARTHING

Earthing of lighting system will be done by using of following sizes of wire / flat:

Lighting Distribution Board	GS Flat 50X6 mm (two earthing leads)
Lighting panels	GS Flat 25X3 mm (two earthing leads)
Lighting fixtures,receptacles,conduits, junction boxes & switch boxes	14 SWG GI Wire (one earthing lead)
Welding receptacles	GS Flat 50X6 mm (two earthing leads)
Lighting pole	GS Flat 25X3 mm (one earthing leads)
Electrode for pole	1 no. 40 mm dia MS Rod, 3 mtr long

7.0 STATUTORY & REGULATORY REQUIREMENT

Statutory and regulatory regulation shall be applicable as per Indian Electricity Rule, 1956 with amendment-3 Rule no. 35, 48, 49, 50, 61 & 64 for illumination & low voltage power services.

8.0 TYPE TEST REPORTS

Type test reports of Lighting fixtures/Lighting panel/Junction boxes/LED/LED chip as per relevant Indian standards shall be submitted for approval if required by the ultimate customer.

ANNEXURE V

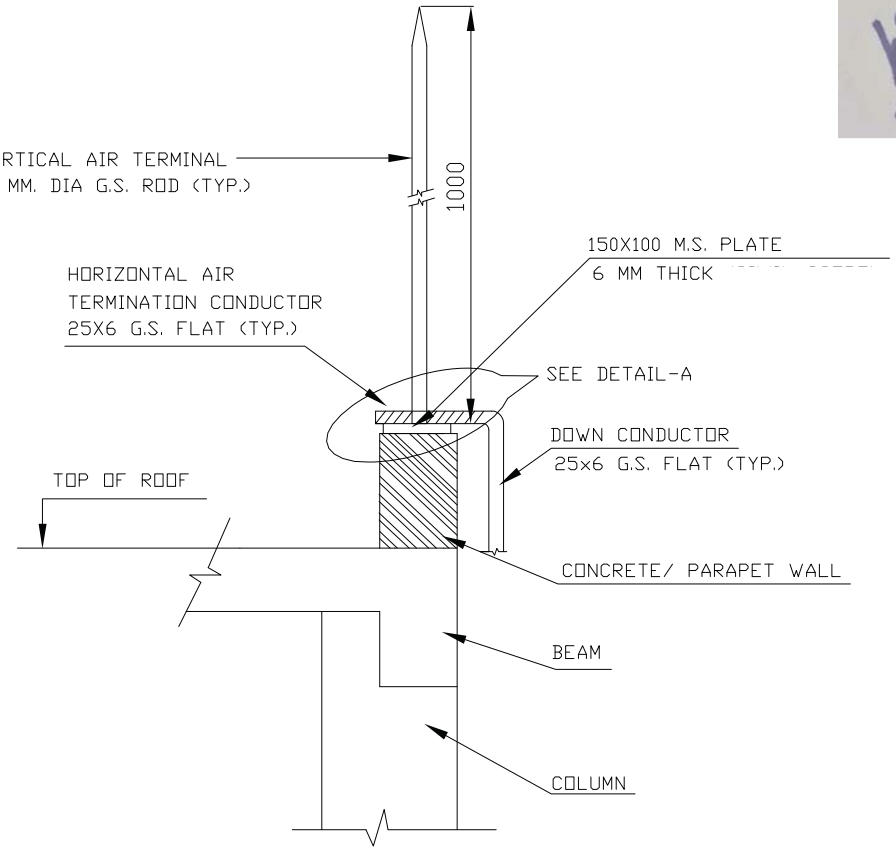

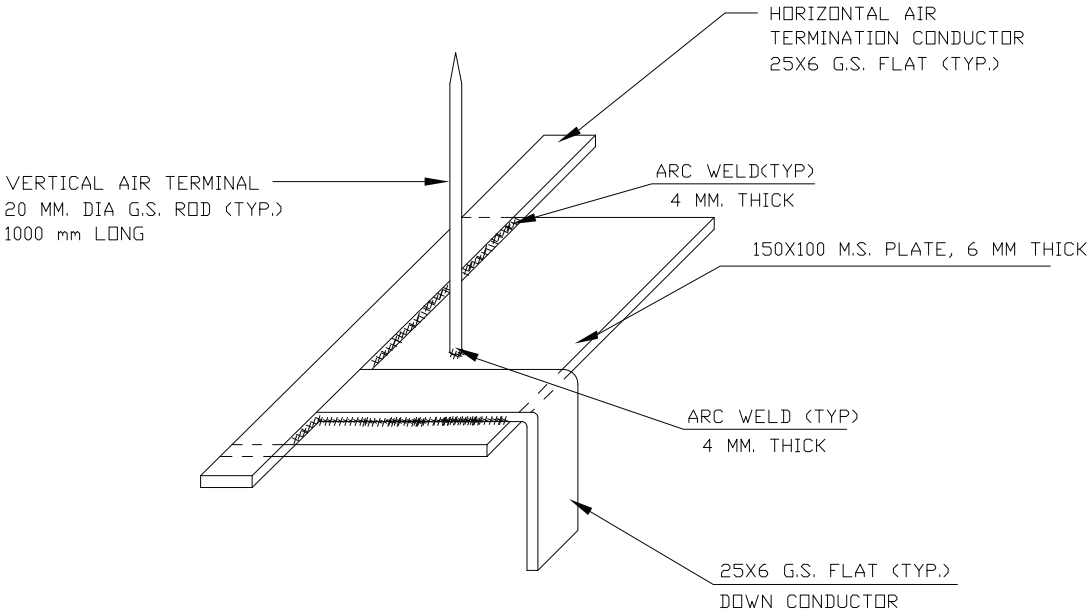

DETAIL-A

TYPICAL FIXING/CONNECTION DETAILS OF VERTICAL AIR TERMINAL ROD ON THE ROOF OF BUILDING

TITLE	BHEL DOCUMENT No. PE-DG-508-509-E006
TYPICAL LIGHTNING PROTECTION DETAILS	REV. No. 0
	SHEET 1 OF 6

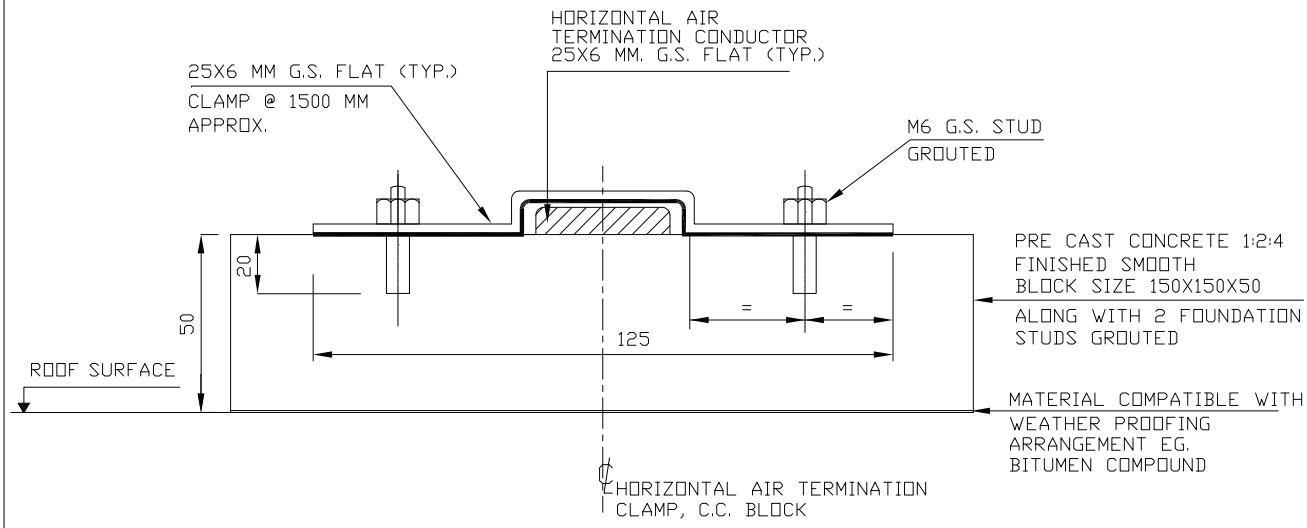

(A) OVER ROOF SURFACE

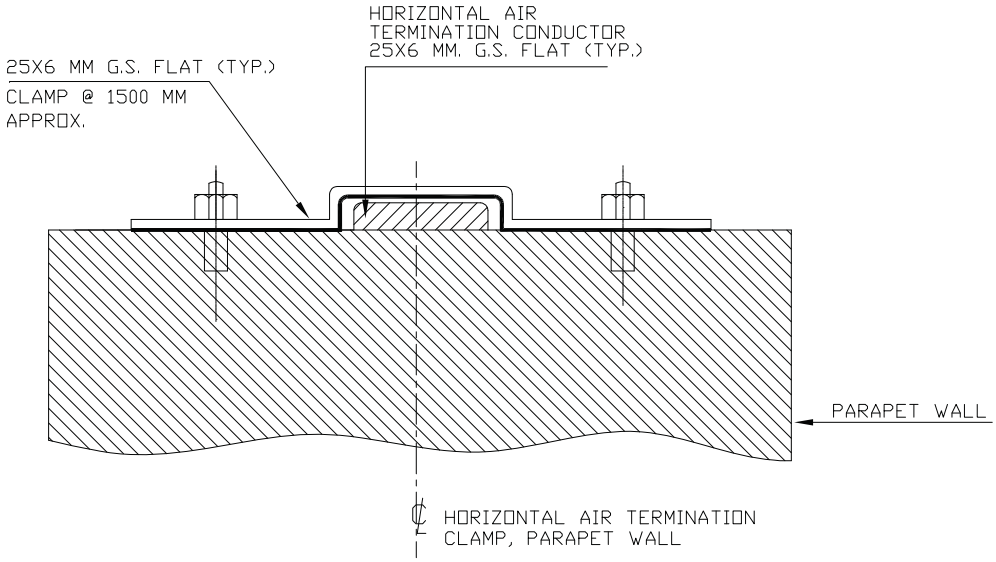

(B) OVER PARAPET WALL

TYPICAL DETAILS OF CLAMPING HORIZONTAL AIR TERMINATION CLAMPING OVER ROOF

TITLE	BHEL DOCUMENT No. PE-DG-508-509-E006
TYPICAL LIGHTNING PROTECTION DETAILS	REV. No. 0
	SHEET 2 OF 6

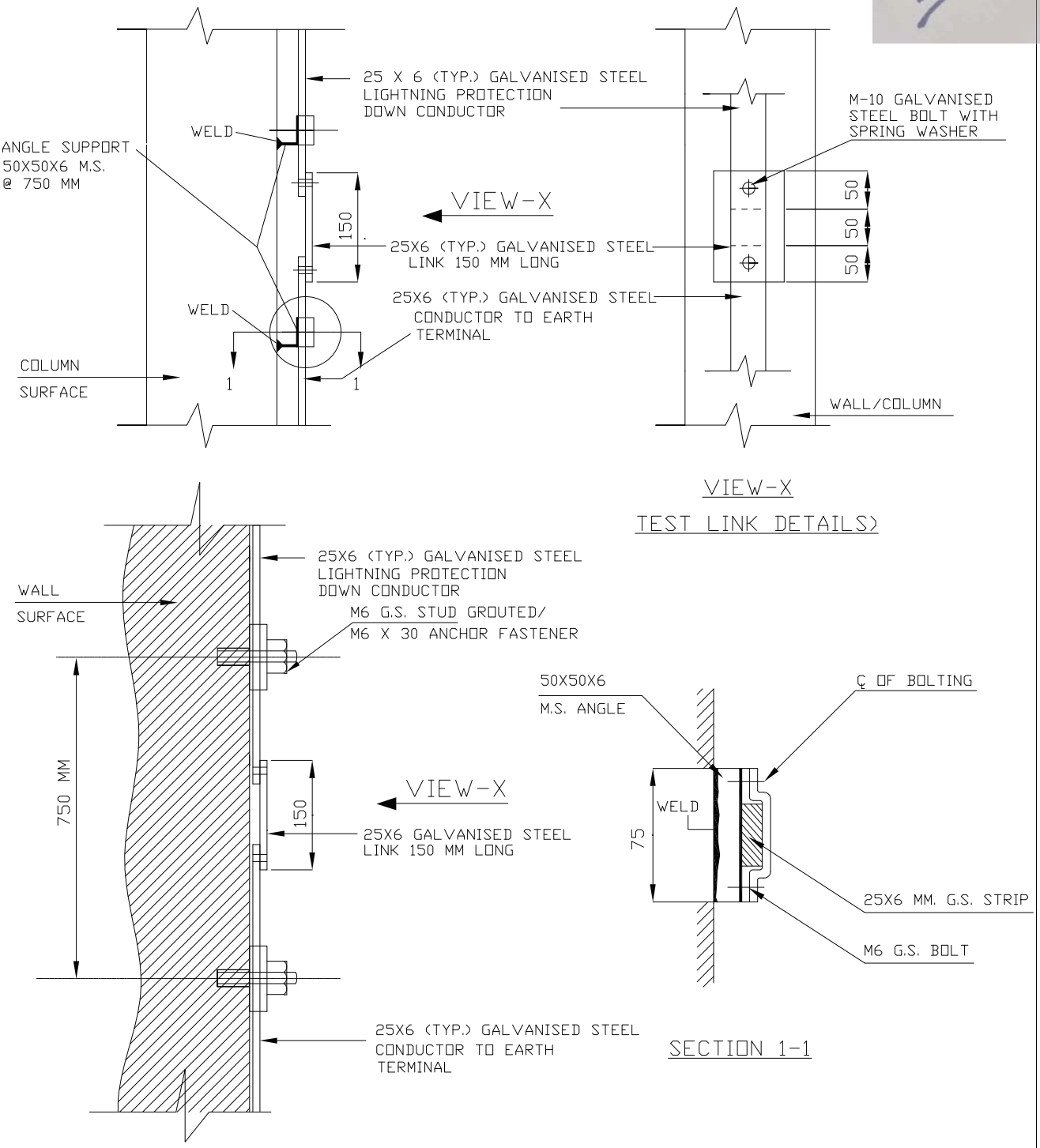

TYPICAL DETAILS OF DOWNCONDUCTOR
FIXING AND TEST LINK

TITLE	BHEL DOCUMENT No. PE-DG-508-509-E006
TYPICAL LIGHTNING PROTECTION DETAILS	REV. No. 0
	SHEET 3 OF 6

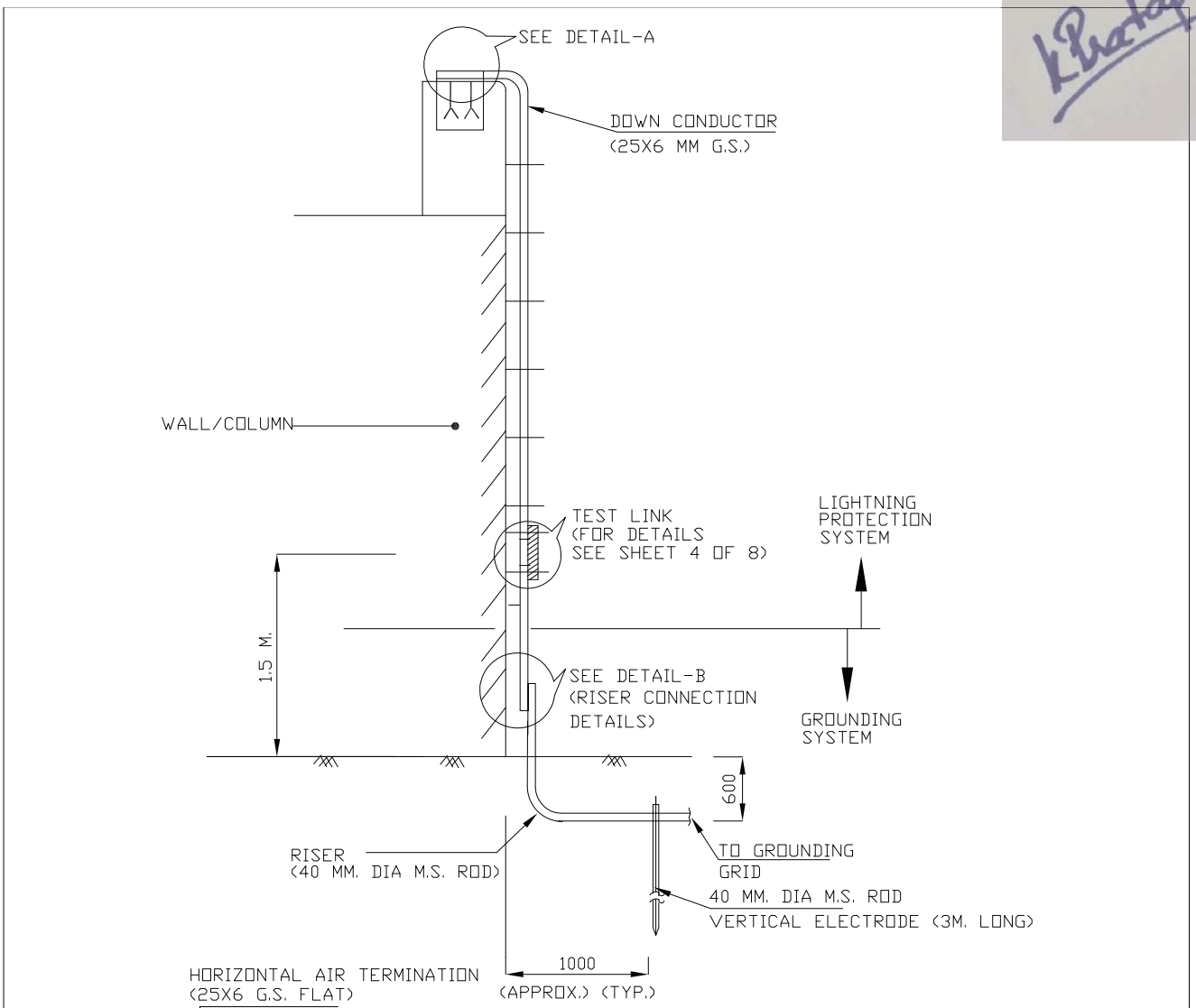

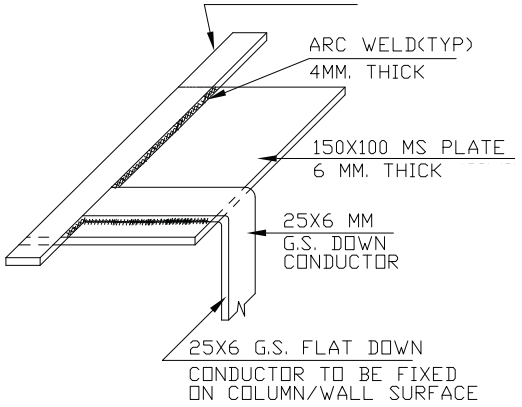

DETAIL-A

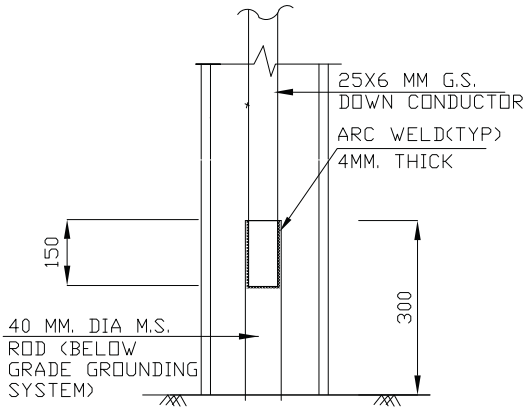

DETAIL-B

(RISER CONNECTION DETAILS)

TYPICAL DETAILS OF CONNECTION AMONG
HORIZONTAL AIR TERMINAL, DOWN CONDUCTOR AND RISER

TITLE	BHEL DOCUMENT No. PE-DG-508-509-E006
TYPICAL LIGHTNING PROTECTION DETAILS	REV. No. 0
	SHEET 4 OF 6

NOTES:-

1.0 AIR TERMINATIONS

1.1 HORIZONTAL/ VERTICAL AIR TERMINATION NETWORK WILL BE INSTALLED ON THE TOP OF ALL STRUCTURE/ BUILDINGS TO BE PROTECTED FROM LIGHTNING STROKES. THE INSTALLATION WORK SHALL BE DULY COORDINATED WITH THE OTHER ACTIVITIES SUCH AS WEATHER PROOFING APPLICATION ON ROOF, ETC.

1.2 HORIZONTAL AIR TERMINATIONS SHALL BE OF 25MM x 6MM GALVANISED STEEL FLATS CLAMPED TO THE SURFACE AT EVERY 1500 MM. HORIZONTAL AIR TERMINATION SHALL NOT BE DIRECTLY CLEATED ON SURFACE OF ROOF. SUPPORTING BLOCKS OF PRE CAST CONCRETE 1:2:4 SHALL BE USED FOR CONDUCTOR FIXING AT AN INTERVAL OF 1500MM. VERTICAL AIR TERMINATION'S SHALL BE 20 MM DIA GALVANISED MILD STEEL ROD 1000 MM LONG.

1.3 THE VERTICAL AIR TERMINATION ROD WILL BE PROPERLY FIXED AS PER DETAILS GIVEN IN THE DRAWING ON THE TOP OF THE BUILDING/ STRUCTURE TO WITHSTAND VERY HIGH WIND PRESSURE. THE HORIZONTAL & VERTICAL AIR TERMINATIONS SHALL BE PROPERLY FIXED ON THE TOP OF ROOF OF THE BUILDINGS SUCH AS NOT TO MAKE ANY PENETRATION IN THE WATER PROOFING LAYER.

2.0 DOWN CONDUCTORS

2.1 THE DOWN CONDUCTORS SHALL BE 25MM X 6MM GALVANISED STEEL FLATS. ONE END OF THESE FLATS SHALL BE CONNECTED TO THE VERTICAL / HORIZONTAL AIR TERMINATION NETWORK ON TOP OF ROOF / STRUCTURE AND THE OTHER END TO THE NEAREST EARTH TERMINALS.

2.2 EACH DOWN CONDUCTOR WILL HAVE AN INDEPENDENT GROUND TERMINATION. IN NO CASE CONDUCTORS OF THE LIGHTNING PROTECTION SYSTEM WILL BE CONNECTED WITH THE CONDUCTORS OF THE GROUNDING SYSTEM ABOVE GROUND LEVEL. THE INDEPENDENT GROUND TERMINATION WILL COMPRISE OF A RISER CONNECTION FROM A 3000 MM LONG GROUND ELECTRODE WHICH IN TURN WILL BE CONNECTED TO THE BELOW GRADE GROUNDING SYSTEM.

2.3 THE CONNECTION BETWEEN EACH DOWN CONDUCTOR AND EARTH TERMINAL WILL BE MADE VIA A TEST LINK LOCATED AT APPROXIMATELY 1500MM ABOVE GROUND LEVEL. THE TEST LINK SHALL BE ENCLOSED IN A PROTECTIVE GALVANISED MS BOX.

2.4 THE DOWN CONDUCTORS WILL BE LAID STRAIGHT AND SHARP BENDS WILL BE AVOIDED AS FAR AS PRACTICABLE. THESE WILL BE FIXED ON THE OUTSIDE OF THE BUILDING WALL AND OR COLUMNS/STRUCTURES AT INTERVALS OF ABOUT 750 MM, AS INDICATED IN THE DRAWINGS.

2.5 ALL EXPOSED METALLIC PARTS OF A BUILDING WILL BE BONDED TO THE DOWN CONDUCTORS. SUCH PARTS WILL INCLUDE LADDERS, BALCONIES, CONDUITS, METALLIC SHEET CLADDING, ETC.

2.6 ALL METALLIC STRUCTURES WITHIN A VICINITY OF TWO METERS OF THE CONDUCTORS SHALL BE BONDED TO CONDUCTORS OF LIGHTNING PROTECTION SYSTEM.

2.7 LIGHTNING CONDUCTORS SHALL NOT PASS THROUGH OR RUN INSIDE GI CONDUITS.

2.8 TESTING LINK SHALL BE MADE OF GALVANIZED STEEL OF SIZE 25X6 MM.

TITLE	BHEL DOCUMENT No. PE-DG-508-509-E006
TYPICAL LIGHTNING PROTECTION DETAILS	REV. No. 0
	SHEET 5 OF 6

3.0 JOINTING

3.1 MINIMUM NUMBER OF JOINTS IN THE LIGHTNING CONDUCTORS WILL BE PROVIDED.

3.2 ALL THE JOINTS WILL BE DONE BY ARC WELDING PROCESS. OVERLAPPING OF CONDUCTORS AT STRAIGHT JOINTS WILL NOT BE LESS THAN 150MM. THE CONTACT SURFACES WILL BE PROPERLY CLEANED BEFORE JOINTING.

3.3 THOSE PORTIONS OF GALVANISED STEEL FLATS, WHICH HAVE BEEN WELDED AT SITE, SHALL BE COATED WITH TWO (2) COATS OF RED OXIDE PAINT FOLLOWED BY TWO COATS OF ZINC PAINT.

3.4 THE VERTICAL AIR TERMINATION RODS WILL BE COATED WITH WEATHER RESISTANT ANTI-CORROSIVE PAINT. (ZINC CHROMATE FOLLOWED BY TWO COATS OF ALUMINIUM PAINT)

4.0 LIGHTNING PROTECTION SYSTEM SHALL BE IN ACCORDANCE WITH IEC 62305.

TITLE	BHEL DOCUMENT No. PE-DG-508-509-E006
TYPICAL LIGHTNING PROTECTION DETAILS	REV. No. 0
	SHEET 6 OF 6

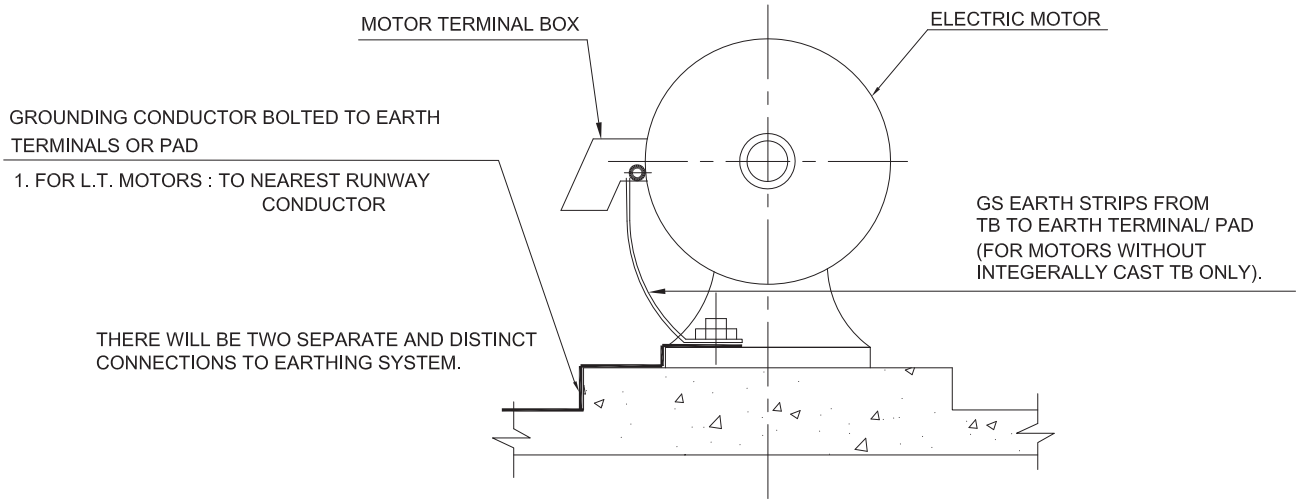

E1 : TYPICAL MOTOR GROUNDING DETAILS

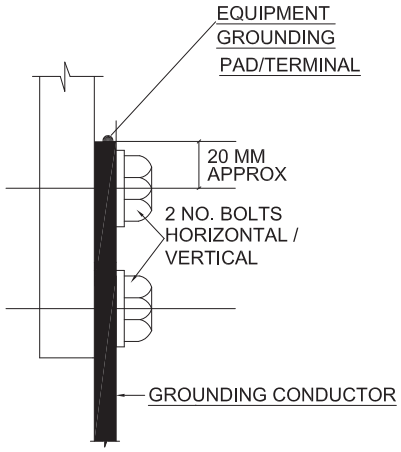

E2 : TYPICAL ARRANGEMENT BOLTED JOINT FOR EQUIPMENT GROUNDING

TITLE	
TYPICAL ABOVE GROUND EARTHING DETAILS	BHEL DRAWING No. PE-DG-508-509-E004
	REV. No. 0
	SHEET 1 OF 8

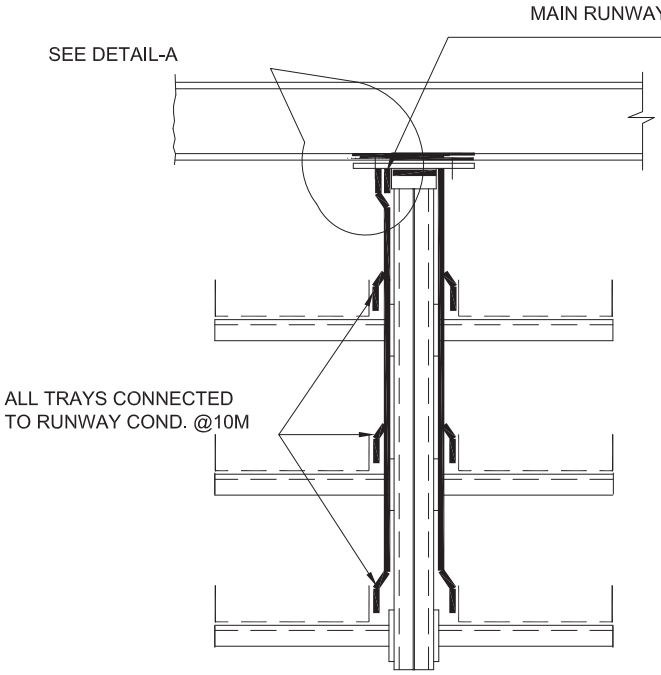

E3 : GROUNDING OF OVERHEAD TRAY STRUCTURE

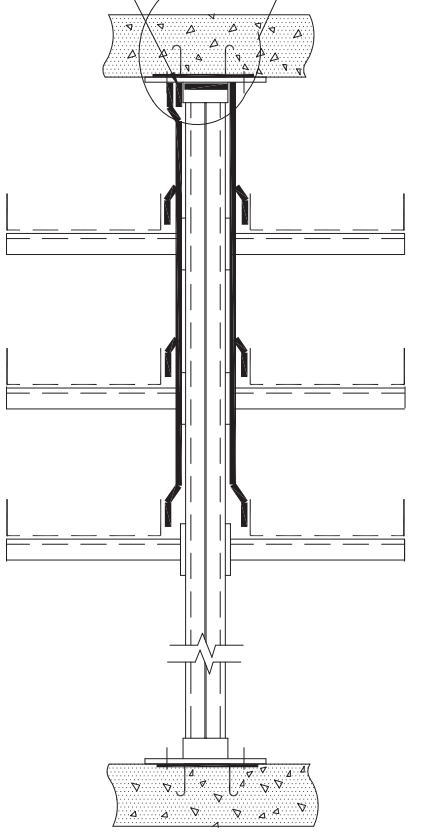

E4 : GROUNDING OF FLOOR SUPPORTED TRAY STRUCTURE

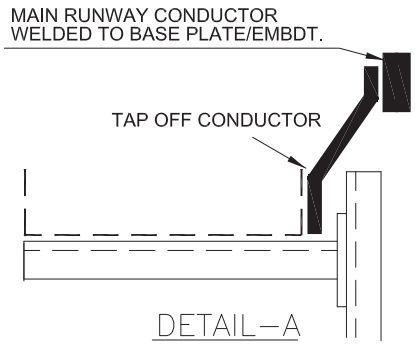

DETAIL–A

TITLE TYPICAL ABOVE GROUND EARTHING DETAILS	BHEL DRAWING No. PE-DG-508-509-E004
	REV. No. 0
	SHEET 2 OF 8

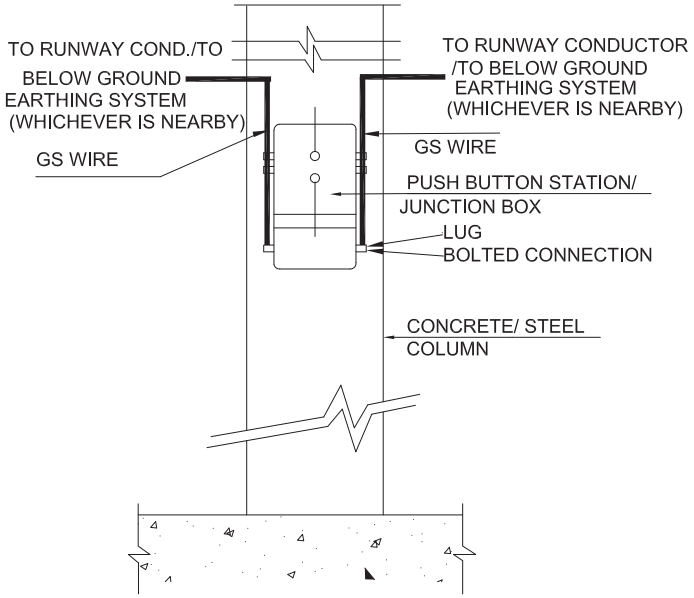

E5 : PUSH BUTTON STATION/

JUNCTION BOX GROUNDING

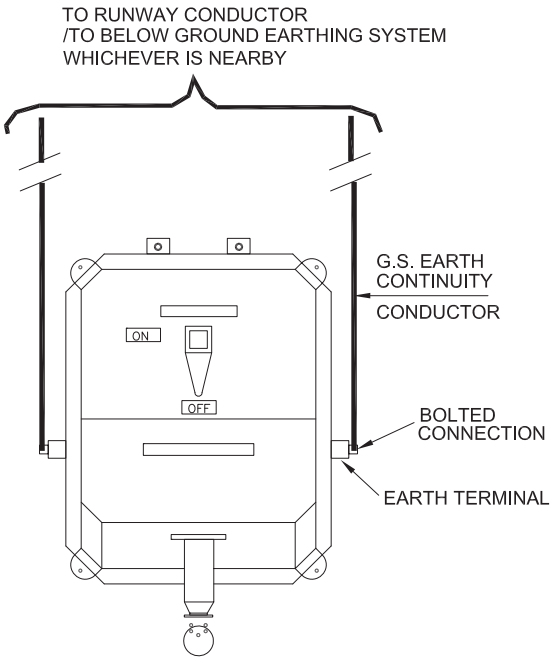

E6 : 3-PHASE WELDING

RECEPTACLE GROUNDING

TITLE	
TYPICAL ABOVE GROUND EARTHING DETAILS	BHEL DRAWING No. PE-DG-508-509-E004
	REV. No. 0
	SHEET 3 OF 8

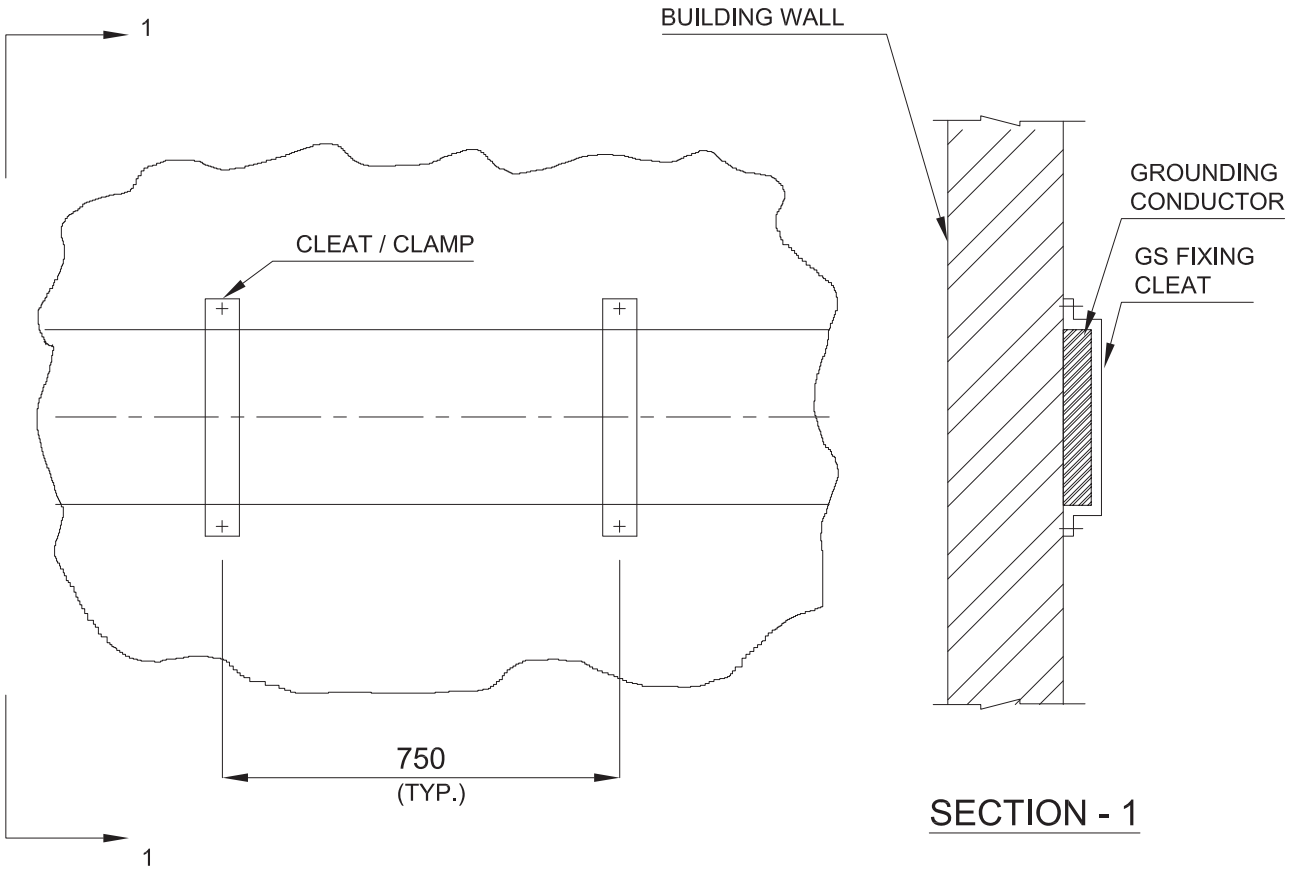

E7: GROUNDING CONDUCTOR ALONG BUILDING WALL

TITLE

TYPICAL ABOVE GROUND EARTHING DETAILS

BHEL DRAWING No.
PE-DG-508-509-E004

REV. No. 0

SHEET 4 OF 8

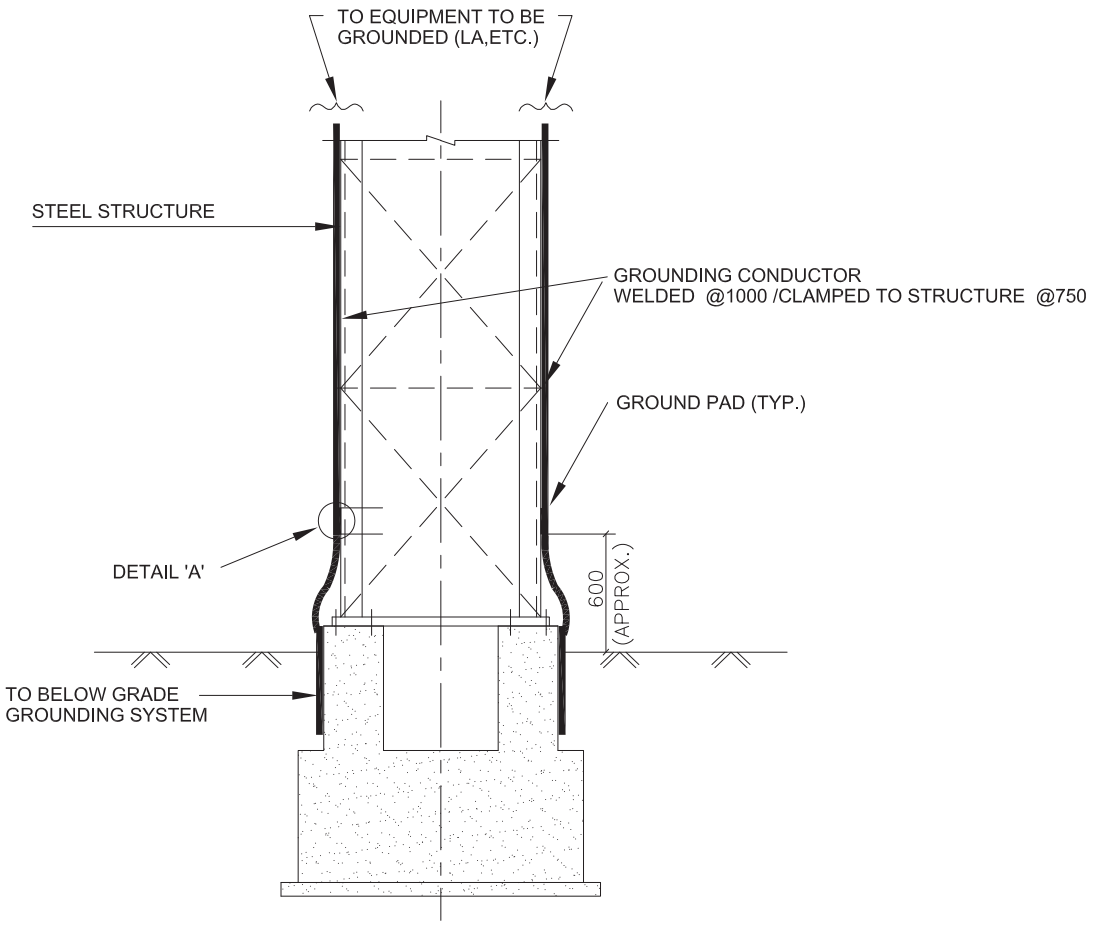

SECTION

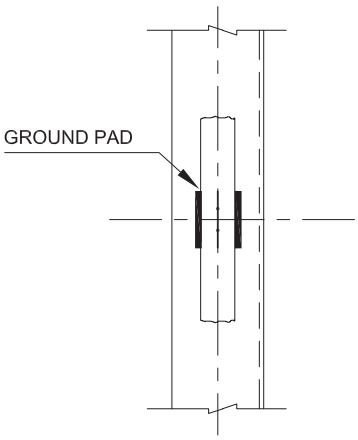

DETAIL - A

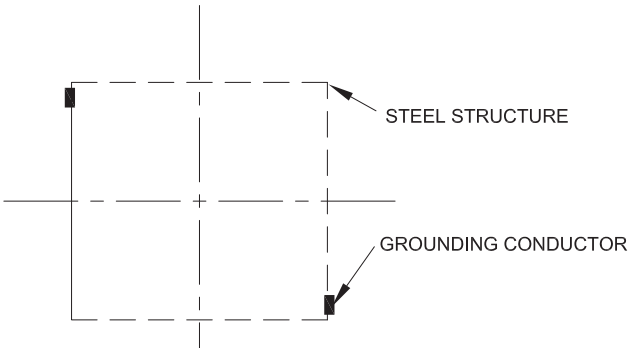

PLAN

E8: STRUCTURE AND EQUIPMENT GROUNDING

TITLE TYPICAL ABOVE GROUND EARTHING DETAILS	BHEL DRAWING No. PE-DG-508-509-E004
	REV. No. 0
	SHEET 5 OF 8

NOTES:

1. ALL GROUND CONDUCTOR CONNECTIONS AT EQUIPMENT ENDS ARE BOLTED.
2. ALL FASTENERS (NUTS/BOLTS/WASHERS) SHALL BE GALVANISED / ZINC PASSIVATED.
3. FROM BELOW GRADE GROUNDING SYSTEM, RISERS OF 40 MM. DIA. MILD STEEL ROD SHALL BE BROUGHT OUT AND CONNECTED TO MAIN GROUND CONDUCTOR (65X8 MM GALVANISED MS FLAT) RUN ALONG BUILDING COLUMNS/ WALLS AND SECURELY FIXED TO THE SAME BY WELDING/ CLEATING AT INTERVALS OF 1000 MM AND 750MM RESPECTIVELY.
   CONNECTIONS FROM EQUIPMENT EARTH TERMINALS, RUNWAY CONDUCTOR,FLOOR SUBMAT, ETC. SHALL BE CONNECTED TO THESE MAIN CONDUCTORS.
4. A CONTINUOUS 65X8 MM. GALVANISED M.S. FLAT EARTH CONDUCTOR (RUNWAY CONDUCTOR) SHALL BE INSTALLED ALONG ALL COLUMNS & STRUCTURES WHICH SHALL SERVE AS THE MAIN GROUNDING CONDUCTOR FOR RECEIVING INDIVIDUAL GROUND CONNECTIONS. ALL TRAY TIERS OF EACH SECTION SHALL BE CONNECTED TO THE RUNWAY CONDUCTOR AT AN INTERVAL OF ABOUT 10 M.
5. THE RUNWAY CONDUCTORS AT DIFFERENT BUILDING ELEVATIONS SHALL BE INTERCONNECTED BETWEEN THE MAIN RISERS ALONG COLUMNS/WALLS & SHALL ALSO BE CONNECTED TO THE NEAREST RISER/ STRUCTURAL COLUMNS AND THE DISTANCE BETWEEN EARTHING POINT SHALL NOT EXCEED 30M.
   WHEREVER EARTH MAT IS NOT AVAILABLE,NECESSARY CONNECTIONS SHALL BE DONE BY DRIVING AN EARTH ELECTRODE IN THE GROUND.
6. ALL ELECTRICAL EQUIPMENT AND ASSOCIATED NON CURRENT CARRYING METAL WORKS, SUPPORTING STRUCTURES, ETC. SHALL BE CONNECTED TO MAIN RUNWAY CONDUCTOR OR BELOW GROUND EARTHING SYSTEM BY TWO SEPARATE & DISTINCT CONNECTIONS EACH OF 100% CAPACITY. ELECTRICAL CONTINUITY SHALL BE ENSURED BY BONDING DIFFERENT SECTIONS OF HAND RAILS & METALLIC STAIRS.
7. TWO SEPARATE AND DISTINCT GROUND CONNECTIONS SHALL BE PROVIDED FOR GROUNDING OF EACH ELECTRICAL EQUIPMENT FRAMEWORK.
   ALL BUILDING STEEL COLUMNS, STRUCTURAL STEEL COLUMNS, DEVICES SUCH AS JUNCTION BOXES, PULL BOXES, PUSH BUTTON STATIONS, LOCKOUT SWITCHES, CABLE END BOXES ETC. SHALL BE GROUNDED WHETHER SPECIFICALLY SHOWN IN THE DRAWING OR NOT AS PER TABLE 1.
8. GROUND CONDUCTOR CONNECTIONS ABOVE GRADE LEVEL SHALL BE GENERALLY MADE BY ELECTRIC ARC WELDING EXCEPT AT EQUIPMENT TERMINALS. M.S. GROUND CONDUCTOR ABOVE GROUND LEVEL SHALL BE TREATED WITH RED LEAD OXIDE AND AFTERWARDS THICKLY COATED WITH BITUMEN COMPOUND TO PREVENT CORROSION. DAMAGED PORTIONS OF GALVANISED MS SHALL BE COATED WITH TWO COATS OF COLD GALVANISING AND ANTI-CORROSIVE PAINT AFTER WELDING.
9. AT EQUIPMENT ENDS, ONLY BOLTED CONNECTION SHALL BE MADE FOR GROUNDING OF EQUIPMENT/ DEVICES AND REMOVABLE STRUCTURES. THE CONTACT SURFACE SHALL BE THROUGHLY CLEANED BEFORE CONNECTION TO ENSURE GOOD ELECTRICAL CONTACT.
10. GROUNDING CONDUCTORS ON FLOORS (I.E. SUBMATS) SHALL BE PROVIDED AS AN ALTERNATIVE TO THE SYSTEM DESCRIBED AT 3,4 & 5 ABOVE ONLY WHERE DIRECT CONNECTION OF EQUIPMENT/ PANELS TO RUNWAY CONDUCTOR/ MAIN GROUND LEADS IS NOT POSSIBLE DUE TO LAYOUT CONSTRAINT. IN SUCH CASES GROUND CONDUCTORS ON FLOORS SHALL BE LAID ON RCC SLAB BEFORE FLOOR FINISHING IS DONE AND CONNECTED TO THE BELOW GROUND EARTHING SYSTEM THROUGH TWO RISERS LOCATED PREFERABLY DIAMETRICALLY OPPOSITE TO EACH OTHER. SUITABLE RISER STUBS SHALL BE PROVIDED ABOVE THE FINISHED FLOOR IF THE EQUIPMENT IS NOT AVAILABLE AT THE TIME OF LAYING THE MAIN GROUNDING CONDUCTOR.

TITLE	
TYPICAL ABOVE GROUND EARTHING DETAILS	BHEL DRAWING No. PE-DG-508-509-E004
	REV. No. 0
	SHEET 6 OF 8

11. EACH LIGHTING POLE, WILL BE GROUNDED BY 25X3 MM GS FLAT, WHICH WILL BE CONNECTED TO ONE NO. 40 MM DIA & 3M LONG EARTH ROD DIRECTLY DRIVEN INTO GROUND.

THE JUNCTION BOX AT EACH LIGHTING POLE IS GROUNDED AT ONE POINT FROM 1 NO. EARTHING TERMINAL BY 14 SWG GI WIRE.

A SEPARATE EARTHING CONDUCTOR SHALL BE PROVIDED FOR EARTHING LIGHTING FIXTURES, RECEPTACLES, SWITCHES, JUNCTION BOXES, LIGHTING CONDUITS, POLES ETC. THIS CONDUCTOR IN TURN SHALL BE CONNECTED TO MAIN EARTH GRID.

12. ELECTRICAL CONDUITS, PIPES AND CABLE TRAY SECTIONS SHALL BE BONDED TO ENSURE ELECTRICAL CONTINUITY AND CONNECTED TO EARTHING CONDUCTORS AT REGULAR INTERVALS.

STEEL/RCC COLUMNS, METALLIC STAIRS, HANDRAILS, CABLE TRAYS, METALLIC CONDUITS AND PIPES SHALL NOT BE USED AS EARTH CONTINUITY CONDUCTOR.

13. JOINTS SHALL BE AVOIDED AS FAR AS POSSIBLE.

14. FLEXIBLE CONDUITS ARE CONNECTED TO RIGID CONDUITS BY GI WIRE TO ENSURE CONTINUITY.

15. CABLE TRAY PIPE RACK/ TRESTLE COLUMNS SHALL BE GROUNDED THROUGH GI FLAT THAT WILL BE CONNECTED TO BELOW GROUND EARTHING SYSTEM.

16. ALL BIMETALLIC CONNECTIONS (IF ANY) SHALL BE BRAZED TYPE AND SHALL BE TREATED TO PREVENT MOISTURE INGRESSION.

17. GROUNDING INSTALLATION SHALL CONFORM TO THE FOLLOWING:
    (A) IS:3043
    (B) INDIAN ELECTRICITY RULE.

TITLE	
TYPICAL ABOVE GROUND EARTHING DETAILS	BHEL DRAWING No. PE-DG-508-509-E004
	REV. No. 0
	SHEET 7 OF 8

TABLE1 : ABOVE GRADE GROUNDING SYSTEM - CONDUCTOR SIZES

SL. NO.	TYPE OF EQUIPMENT	SIZE (MM)	MATERIAL	NO. OF LEADS
01	RUNWAY CONDUCTOR/ MAIN EARTH LEAD ALONG COLUMNS & STRUCTURES	65X8	GALVANISED MS FLAT	N.A.
02	FUSE DISTRIBUTION BOARDS, LDBS	50X6	GALVANISED MS FLAT	TWO
03	415V MOTORS : 75 KW & ABOVE	50X6	GALVANISED MS FLAT	TWO
04	415V MOTORS : ABOVE 30 KW AND UPTO 75KW	35X6	GALVANISED MS FLAT	TWO
05	415V MOTORS : UPTO 30 KW	25X3	GALVANISED MS FLAT	TWO
06	415V MOTORS : FRACTIONAL KW	8SWG	GS WIRE	TWO
07	PUSH BUTTON STATION & JUNCTION BOX	8SWG	GS WIRE	TWO
08	CABLE TRAYS, COLUMNS & STRUCTURES	50X6	GALVANISED MS FLAT	ONE
09	RAILS & METAL PARTS,	25X6	GALVANISED MS FLAT	TWO
10	WELDING OUTLETS 3-PHASE RECEPTACLES	50X6	GALVANISED MS FLAT	TWO
11	LOCAL PANELS, LIGHTING PANELS	25X3	GALVANISED MS FLAT	TWO
12	LIGHTING POLE	25X3	GALVANISED MS FLAT	ONE
13	LIGHTING FIXTURES, CONDUITS,SINGLE-PHASE RECEPTACLES, LIGHTING JBs , SWITCH BOXES	14SWG	GS WIRE	ONE

TITLE

TYPICAL ABOVE GROUND EARTHING DETAILS

BHEL DRAWING No.
PE-DG-508-509-E004

REV. No. 0

SHEET 8 OF 8

ANNEXURE VIII

LOAD TITLE	RATING (KW / A)		UNIT (U)/STN (S)	Nos.		VOLTAGE CODE*	FEEDER CODE**	EMER. LOAD (Y)	CONT.(C)/ INTT.(I)	STARTING TIME >5 SEC (Y)	LOCATION	BOARD NO.	CABLE		BLOCK CABLE DRG. No.	CONTROL CODE	REMARKS	LOAD No.
	NAME PLATE	MAX. CONT. DEMAND (MCR)		RUNNING	STANDBY								SIZE CODE	NOs				
1	2	3	4	5	6	7	8	9	10	11	12	13	14	15	16	17	18	19

NOTES:

1. COLUMN 1 TO 12 & 18 SHALL BE FILLED BY THE REQUISITIONER (ORIGINATING AGENCY); REMAINING COLUMNS ARE TO BE FILLED UP BY PEM (ELECTRICAL)
2. ABBREVIATIONS : * VOLTAGE CODE (7):- (ac) A=11 KV, B=6.6 KV, C=3.3 KV, D=415 V, E=240 V (1 PH), F=110 V (dc): G=220 V, H=110 V, J=48 V, K=+24V, L=-24 V
   : ** FEEDER CODE (8):- U=UNIDIRECTIONAL STARTER, B=BI-DIRECTIONAL STARTER, S=SUPPLY FEEDER, D=SUPPLY FEEDER (CONTACTER CONTROLLED)

	LOAD DATA (ELECTRICAL)	JOB NO.		ORIGINATING AGENCY		PEM (ELECTRICAL)	
		PROJECT TITLE		NAME		DATA FILLED UP ON	
		SYSTEM / S	IDCT	SIGN.		DATA ENTERED ON	
		DEPTT. / SECTION		SHEET 1 OF 1	REV. 00	DE'S SIGN. & DATE	

TECHNICAL DATA - PART - A

SL.NO	DESCRIPTION	UOM	DETAIL
1.0	**DESIGN CODES & STANDARDS**		
1.1	Impulse pipes, tubes (material, rating)		ANSI B31.1, ANSI B31.1a, ANSI/ISA 77.70
1.2	Valves (material, pr. Class, size)		ASTM A182/ASTM A105 as per ASME 16.34
1.3	Fittings (size, rating, material)		ANSI B31.1, ANSI B31.1a, ASME B16.11
1.4	Installation schemes		BS 6739-2009, ANSI/ISA 77.70
1.5	Transducers		IEC-688, IS-12784
1.6	Instruments and apparatus for pressure measurement		ASME PTC19.2
1.7	Bourdon tube pressure and vacuum gauges		IS-3624
1.8	Instrument and apparatus for temperature measurement		ASME PTC 19.3(1974)
1.9	Temperature measurement by electrical Resistance thermometers		IS:2806
1.10	RTD Sensor		IS: 2848/ DIN-43760
1.11	Protection system		NFPA 85 & IBR latest editions
2.0	**DESIGN /SYSTEM PARAMETERS**		
2.1	**SPECIFICATIONS - PRESSURE GAUGE**		
	Type		Direct Reading
	Sensing element		Bourdon for high pressure, diaphragm/bellow for low pressure
	Sensing element material		SS316
	Movement material		SS316
	Body material		SS316
	Case material		Die Cast Aluminum with stoved enamel black finish/ SS316
	Dial size	mm	150mm with toughened shatter proof glass
	End connection	inch	1/2 inch NPT (M) Bottom connection for local mounting
	Accuracy	%	±1% of span or better
	Scale		Linear, 270° arc graduated in metric units
	Over range test		150% of maximum range by internal stop. External stop at zero
	Nameplate		Tag number and Service engraved in SS tag plate
	Standard applicable		IS:3624-1966
	Diaphragm seal material		Suitable for process fluid
	Diaphragm fill fluid		Inert liquid
	Wetted parts		All wetted parts upto diaphragm seal shall be suitable for process application
	Housing		IP-65
	Zero/span adjustment		Micrometer screw for zero adjustment
	Accessories		a) Stainless steel Diaphragm seals (SS armoured capillary of 5 mtrs length min) for corrosive, viscous and solid-bearing or slurry type process fluids, flushing ring with plug required. b) Gauge saver, Syphon wherever required c) 3-Way stainless steel Gauge valve/ 2-valve SS-316 manifold for pressure gauges. Process connection ½" NPT d) 5-valve SS316 manifold constructed from bar-stock for differential pressure gauge. Process connection ½" NPT. e) Union, nut & tail piece and other Installation accessories as required. f) All wetted parts shall be of SS316 or better

2.2	**SPECIFICATIONS - LEVEL SWITCH**		
	Repeatability	%	+/-0.5% of full range
	No. of contacts		2 No.+2NC. SPDT snap action dry contact
	Rating of contacts	V, VA	60 V DC, 6 VA
	Elect. Connection		Plug in socket.
	Set point adjustment		Provided over full range.
	Dead band adjustment		Adjustable/ fixed as per requirement of application.
	Enclosure		IP-55
	Power Supply	V	24V DC
	Sensing Element		Float type, conductivity type, Ultrasonic type as per suitability to the application
	Material		316 SS
	End connection		Manufacturer standard
	Over range/ proof pressure	%	150% of maximum operating pr.
	Accessories		All mounting accessories
2.3	**SPECIFICATIONS - TEMPERATURE GAUGE**		
	Type		Direct reading
	Sensing element		Bimetallic type for below 450 Deg. C and inert gas actuated for above 450 Deg. C, Inert type(capillary of 5 mtrs.length)
	Material of Construction		a) Stem - SS- 304 or better b) Movement Material - SS-316 or better c) Connection- SS-316 or better d) Case Material - Die Cast Aluminum with stoved enamel black finish/ SS 304 e) Capillary - SS-316 or better f) Armor - Flexible, SS 304, optional PVC covered
	Dial		Anti parallax heavy gauge aluminum with white matte finish glare free. Black lettering on white background
	Pointer		Aluminum Black Micrometer pointer
	Dampener		Dampening pointer oscillation
	Mounting		Surface mounting with adjustable angle
	Response Time		30 seconds (max.) with Thermowell and 15 seconds bare
	Nameplate		Tag number and Service engraved in stainless steel tag plate
	Applicable Standard		EN 13190
	End connection		1/2" NPT (M)
	Accuracy	%	± 1% of span
	Dial Size	mm	150 mm with toughened shatter proof glass
	Scale		Linear, 270° arc graduated in °C
	Range selection	%	Normal process pressure 50 ~ 70% of range (approximately)
	Over range protection		150% of range or more
	Housing		IP-65 (Explosion proof for NEC Class-1, Division 1 area)
	Zero/span adjustment		Required
	Accessories		SS Thermowell, Installation accessories as required

2.4	**SPECIFICATIONS - TEMPERATURE TRANSMITTER**		
	Transmitter Type		Microprocessor based 2 wire type, HART protocol compatible
	Input		Same transmitter shall be capable to handle Pt-100 RTD, Thermocouples –K types (input to be selectable at site through HART calibrator/ terminal)
	Isolation		Min. 500 V AC
	Output Signal		4~20 mA DC (Analog) along with superimposed digital signal (HART based)
	Body Material		Epoxy coated Die cast Aluminium/ SS316
	Load Impedance		600 Ohms (min.) at 24 Volts DC
	Electrical Connection		½" NPT (F)
	Operating Voltage		24V DC ±10%
	Output Indicator		LCD type digital integral indicators with scale of engineering units
	Cold Junction Compensation		Built-in (for Thermocouples)
	Burn-out Protection		In case of failure (open or burn-out) of RTD/ Thermocouple, Temperature Transmitter shall provide Low Temperature output
	EMC Compatibility		As per EN 61326
	Diagnostics		Self-indicating feature
	Operating Ambient Temperature		0-85°C (without indicator) 0-70°C (with indicator)
	Repeatibility		0.05 % of span
	Span and Zero		Adjustable in field , Non- interacting facility of elevation and suppression of zero.
	Calibration		As per N.I.S.T Monograph 125 for T/C and European Curve Alpha = 0.00385 for RTD.
	Composite Accuracy		a) For DIN-rail Mounted Type RTD ≤0.4% of 0-250° span TC-K type ≤0.4% of 0-600° span b) For Dual Input Type RTD ≤0.25% of 0-250° span TC-K type ≤0.2% of 0-600° span
	Nameplate		Tag number and Service engraved in stainless steel tag plate
	Accessories		Mounting arrangements including clamps, Cable gland, Hi-tensile carbon steel Ubolts etc.

2.5	**SPECIFICATIONS - RESISTANCE TEMPERATURE DETECTOR (RTD)**		
	Type		Four/ Three wire, Pt-100
	No. of element		Duplex
	Junction		Ungrounded
	Sheath		a) Sheath Diameter - 8 mm b) Sheath Material - SS316 c) Sheath Insulation - Compacted Magnesium Oxide High purity (99.4% minimum)
	Head Assembly		a) Head Style - Threaded Cover with SS Chain, Neoprene Gasket b) Head Type - IP-65 universal screwed type. (Explosion proof for NEC Class-1, Division 1 area) c) Head Material - Epoxy coated Die cast aluminum or better
	Terminal Block		High quality ceramic, polarity embossed terminal block Brass - Ni Plated (Spring Loaded)
	Instrument Connection		½" NPT (M)
	Electrical Connection		½" NPT Double entry, one unused entry with blind plug
	Process Connection		a) M33x2 b) Flanged
	Extension		Threaded union (SS316) ½" NPT (F) with two nipples of SS 316 having ½" NPT (M) threads at both ends
	Extension Neck Length		Minimum 100 mm above insulation of pipe and minimum 160 mm when there is no insulation in pipe
	Calibration & Accuracy		As per DIN-43760/IEC 60751 Class-A
	Response Time		a) Bare RTD - Less than 4-6 seconds b) With Protective Sheath - Less than 10 seconds c) With Thermowell - Less than 30 seconds
	Characteristic		Linear with respect to temperature within ±0.5% of top range value
	Standard		DIN-43760/IEC 60751 for RTD and ASME PTC-19.3 (latest edition) for Thermowell
	Nameplate		Tag number and Service engraved in stainless steel tag plate with chain
	Accessories		Thermowell (as specified below) and shall be spring loaded for positive contacts with the well
	NOTES		The protective-sheath material shall be SS 316, seamless tubes using compacted magnesium oxide packing for insulation. The insulation resistance at 540°C shall not be less than 5 mega-ohms.
			The specifications for RTDs of winding/ bearings of motor/ pump can be as per their manufacturer standards. The manufacturer shall submit the adequate supporting documents for establishing their standard practice. However, the type of RTD shall be PT100
2.6	**SPECIFICATIONS - THERMOWELL**		
	Design		ASME PTC-19.3 TW-Latest Edition
	Material		SS316

2.7	**SPECIFICATIONS - Anemometer WIND SPEED SENSOR**		
	Anemometer system shall be complete with wind speed sensor with integral cable, wind direction sensor with integral cable, combined dual display unit for displaying wind velocity as well as wind direction		
	Power Supply		240V AC, 50Hz (UPS)
	Output		a) Wind Velocity - Frequency Proportion to Wind Velocity b) Direction- 4 - 20mA Proportional to degrees
	Display		Graphic Display
	Range		a) Velocity : 5-245 km/hr Two (2) trip points “Alarm” and “Danger” settable over full range. Manual Reset 2NO+2NC (200 VA at 230V AC) b) Direction : 0-360 Deg.
	Accuracy		±2% of span, ±5°
	Mounting		a) Monitor - Panel mounting b) Sensor - Pipe/ Mast mounting
	Housing		Weather proof
2.8	**SPECIFICATIONS - WIND DIRECTION SENSOR**		
	Principle		Potentiometric type Sensor proportional to Wind direction)
	Range	Degree	0-360 degree
	Accuracy	%	2 % of full scale
	Threshold	m/sec	0.3 m/ sec
	Operating Temperature	DegC	0 to 50 deg C
	Feature		Data Logging, Interface with DCS
2.9	**SPECIFICATIONS - LIMIT SWITCH**		
	Sensing system		Non-contact type inductive Proximity/Namur type
	Sensing Distance		10 mm minimum
	Indicator		LED indication
	Temperature Range		-25 to 85°C
	Protection Class		IP-65
	Switch configuration		2 SPDT
	Contact rating		5A min. at 240V AC on resistive load
	Power Supply		24V DC/ 8V DC (for NAMUR)
	Integral Cable		Provided
	Hysteresis		Max. 10% of sensing distance
	Mounting		Flush mounting with check nut
2.10	**CABLE GLAND**		
	Type		Double compression
	Entry Thread		NPT
	Material		SS316
	Protection		IP 65 or better
	Accessories		Neoprene gasket, locknuts, reducers etc

2.11	**SPECIFICATIONS - JUNCTION BOX**		
	Type of Enclosure		Dust tight & weatherproof conforming to IP 65/ Flame proof/ Explosion proof as per area classification
	No. of Ways		12/24/36/48/64/72/96/128 with 20% spare terminals. Number of ways should be decided by vendor as per requirement.
	Material		4 mm min. thickness FRP (Fiberglass Reinforced Polyester) with protective coating (UV stabilized)
	Type of Cover		Hinged lockable type door, screwed at all four corners
	Door Handle		SS
	Door Lock		Identical locks for all junction boxes with common key
	Gland Plate		Undrilled / with knock-outs removable gland plate of 3 mm CRCA/ 4 mm Thick Brass for FRP JB
	Gasket		Neoprene/ polyurethane (6 mm thickness) Silicon for high temperature area (All doors, gland plate removables shall be gasketted)
	Cable Entry		Bottom/ Side
	Cable Gland		Double Compression type SS 316
	Mounting		Indoor/ Outdoor mounting on walls/ columns/ structures/ surface/ 2" pipe/ stanchion etc.
	Terminal Block		Rail mounted cage clamp type screwless terminals suitable for 0.5 mm2 to 2.5 mm2 cable. Terminal blocks shall be properly arranged inside JB with end plate & end clamp in DIN rail (MS plated) and marked-up with TB nos. from top to bottom to facilitate easy termination of the cables. Suitable cable channel with cover shall be provided on both sides of TB's for all JB's.
	Mounting Plate		2 mm Thickness MS powder coated DIN Rails and cable channels shall be bolted to the mounting plate/ rear body using studs
	Top Surface		With slope
	Grounding		Copper earth bus bar shall be provided in each JB Earth bus bar shall be 25 mm x 6 mm Copper
	Earthing Stud		M6 Nickel plated Brass Earthing stud with green screw head (External 2 nos., Internal 1 no.)
	Paint		RAL 7032 (Pigmented Color for FRP)
	Identification		SS Tag plate suitable for three rows engraving with tag no. Black back ground with red letters for explosion proof JBs. Identification label shall be provided for each cable and tags for cable. Instrument tag vis-à-vis service and terminal details shall be printed on Phenolic board mounted on back side of door.
	Accessories		a) Ferrules & lugs b) Canopy at top for outdoor junction boxes Canopy shall be minimum 3 mm thick extended 40 mm (approx.) from each side c) Mounting Brackets (SS 304) Wall mounting brackets shall be welded to rear side of JB d) Bolts, nuts (SS 304)
	Routine & Acceptance Test		Visual, GA, Layout, Dimension, Component Rating, IR & HV Test
	Type Test		Degree of protection Test as per IEC 60529 mentioned in IS/ IEC 60947-1:2004
	NOTES:		
	(a) Separate Terminal blocks shall be used for Analog & Digital Signals & also for signals with different voltage levels.		
	(b) The terminal blocks shall be arranged with at least 100 mm clearance between two sets of terminal blocks and between terminal blocks and junction box walls.		
	(c) Separate shield bus shall be provided with screw connection for terminating cable shields.		
	(d) All spare cable entries shall be provided with plugs.		

2.12	**Impulse piping for water area/equipment**		
	Painting color scheme		Grey RAL 9002
	Identification Tag/band color scheme		Sea green, ISC no. 217
2.13	**Impulse piping for Oil area**		
	Painting color scheme		Grey RAL 9002
	Identification Tag/band color scheme		Light Brown, ISC no. 410

	GENERAL TECHNICAL REQUIREMENT
1	The equipment shall comply with all applicable safety codes and statutory regulations of India as well as of the locality where the equipment is to be installed.
2	In the event of any conflict between the requirements of two clauses of this specification, documents or requirements of different codes and standards specified, however more stringent requirement as per the interpretation of the owner shall apply.
3	Bidder to note that drawing/document submission shall be through web based Document Management System. Bidder would be provided access to the DMS for drg/doc approval and adequate training for the same. Bidder to ensure proper net connectivity at their end.
4	The first revision drawings/ documents submitted by bidder shall be complete in all respects. Any incomplete drawing submitted shall be treated as non- submission with delays attributable to bidder's account. For any clarification/ discussion required to complete the drawings, the bidder shall himself depute his personal to BHEL / Customer's place any number of time as per the requirement for across the table discussions/ finalizations/ submissions of drawings.
5	**PROVEN PRODUCT** All equipment, systems and accessories furnished under this specification shall be from the latest proven product range of a reputed experienced manufacturer whose successful performance has been established by a considerable record of satisfactory operation in similar power stations. Bidder shall furnish satisfactory evidence regarding successful operation and high reliability of the proposed equipment/ systems in similar applications for meeting this requirement as specified elsewhere. The Bidder shall furnish a complete list of bought out items (i.e., items not from manufacturing range) which the Bidder has included in his proposal along with the names of proposed sub-vendors as a part of his proposal. However the make and model of all bought out items supplied by the Bidder shall be as approved by Owner / Consultant during detailed engineering stage.
6	Latest codes and standards shall be applicable as on date of bid submission.

C&I TECHNICAL REQUIREMENT

1	Control of Induced Draft Cooling Tower(IDCT) package shall be through DCS(BHEL Scope) with 24" LED based OWS located in Control Room.
2	Complete Field Intrumentation for monitoring and operation of IDCT package be provided by bidder.
3	The quantity of instruments for the system indicated in "General Technical Requirement" shall be considered as minimum requirement by the bidder. Any other instrument/item required for completeness of the system shall be in bidder's scope of supply.
4	All instrumentation, control and automation devices and accessories shall be designed with the following considerations: a) Stable in spite of temperature fluctuations. (b) Able to withstand high humidity. c) Weather proof. d) Dust proof. e) Corrosion resistant. f) Erosion resistant. g) Able to withstand high vibration. h) Easily accessible for operation & maintenance.
5	INSTRUMENT SCALE DISPLAY a) All displays shall be in engineering units. Instrument scales displayed on screen shall have graduations with scale divisions based on multiples of 10. The smallest division shall preferably be a whole number approximately 1% of the scale range if not otherwise impracticable. b) Pressure instrument shall have the unit suffixed with 'a' or 'g' to indicate absolute or gauge pressure respectively. c) Scales and charts of all instruments shall have linear graduations.
6	INSTRUMENT RANGE The ranges of the instruments shall be selected based on the following philosophy: Deviation indicators shall have the null position at mid-scale. The normal operating parameter shall be identified with a clear green mark. • For pressure and draft measurements, the maximum operating pressure shall be within 70 to 80% of the maximum scale range. • For temperature measurement, the maximum operating temperature shall be within 80 to 90% of the maximum scale range. • For pressure switches and temperature switches, the set points shall fall within 40% to 70% of the scale range selected. • For level measurement, the maximum of the range shall cover the overflow point or six inches from the top of the vessel and the minimum of the range shall be six inches above the bottom of the vessel. Also, the gauge glasses will be stacked with overlap to cover permissive, alarm and trip levels.
7	ENVIRONMENTAL CONDITIONS minimum design requirement of 55°C (Max.) and 4°C (Min.) and 95% RH.,

8	Instrumentation sensing, transmission, measuring and computing system shall be solid-state electronic type. Field process transmitters shall be smart (HART based) type.
9	Diaphragm seal shall be provided with Instruments having contact with corrosive / viscous media. For corrosive applications, all instruments applications, they shall be provided with wetted parts made of Monel/Hastelloy C. All instruments shall be provided with durable epoxy coating for housings and all exposed surfaces
10	The enclosures of all electronic instruments shall conform to IP-65 unless otherwise specified (Explosion proof for NEC article 500, class 1/2, Division 1 area & Flame proof area) and an anti corrosive paint shall be applied to the field mounted enclosures / instruments.
11	All instruments shall be supplied with valid calibration and test certificates provided by OEM.
12	Following items are to be supplied for process as a minimum: □ Temperature Elements with temperature transmitters, thermowell and Temperature Gauges for each Gear box. Temperature sensors shall be on gear box while display (Gauge Meter & Transmitter display) shall be outside RCC Stack (near Fan Motor). □ One no. Level Switch for each of the gear box for lube oil level.
13	Following items are to be supplied as a minimum for PG Test: □ Temperature Elements with temperature transmitters and Temperature Gauges for each of the Hot Water Riser. □ Temperature Elements with temperature transmitters and Temperature Gauges with necessary stub, fitting, mounting arrangements etc. in the cold water channel for each cooling tower in canopy. □ Pressure Gauges for each of the Hot Water Riser. □ Pitot Tube along with manometers for Flow measurement with stub connections. □ Anemometer (one number) for measurement of wind velocity. □ Psychrometer (one number) - Mechanically aspirated with RTD □ Barometer (one number) for measurement of atmospheric pressure. □ A temporary test Data Acquisition System (DAS) shall be used to monitor the majority of the precision test pressures and temperatures. The requirements given here are to be read in conjunction with "CTI - ATC 105" performance test code.The more stringent requirement as per interpretation of customer shall prevail without any commercial implication.
14	Root valves, impulse piping, drain cocks, gauge-zeroing cocks, valve manifold, junction boxes and all other accessories required for erection of local / remote instruments shall be provided by bidder.
15	The contacts of equipment mounted instruments, sensors, switches etc. for external connection including spare contacts shall be wired out in flexible/rigid conduits, independently to suitably located common junction boxes.
16	Bidder shall provide mounting pads for vibration sensors for each fan motor.
17	Bidder to provide temperature transmitter along with junction box & other erection hardware.
18	All instruments shall be terminated on junction box in the field. Number of Junction Boxes shall be sufficient and positioned in the field to minimize local cabling and trunk cable.
19	Number of pairs to be selected for Screen /Control cable 1. F-Type: 2P/4P/8P/12P (Size: 0.5sqmm2) 2. G-Type: 2P/4P/8P/12P (Size: 0.5sqmm2)
20	Vibration Monitoring System is envisaged for Cooling Tower Fan/Motor which is in BHEL scope. However, for mounting of vibration sensors/probe, vendor to provide vibration pad (of dimension of 80 mm*80mm*10mm each) for mounting of sensors and a notch/slot for mounting of key phasor.
21	All Temperature sensors shall be Duplex type and temperature transmitter shall be provided for all temperature measurement applications. Bidder to provide temperature transmitter along with JB/Rack & other erection hardware.
22	Bidder to furnish electrical/UPS load data required for any instruments etc. during detailed engineering
23	All instruments shall be terminated on JB/Rack/LCP in field where both instrument and JB/Rack/LCP are in bidder
24	For cable scope refer to electrical scope between BHEL and vendor defined in electrical specification.
25	Bidder to provide mandatory spares as per mandatory spares list.
26	All the transmitters supplied by Bidder shall be rack mounted. The transmitter racks shall be in Bidder's scope of supply. All transmitters shall be HART compatible. Only two wire transmitter shall be used. Instrument shall have the provision to be calibrated using Universal Hand held Calibrator.
27	Number of Junction Boxes shall be sufficient and positioned in the field to minimize local cabling (max 10-12 mtrs) and trunk cable.

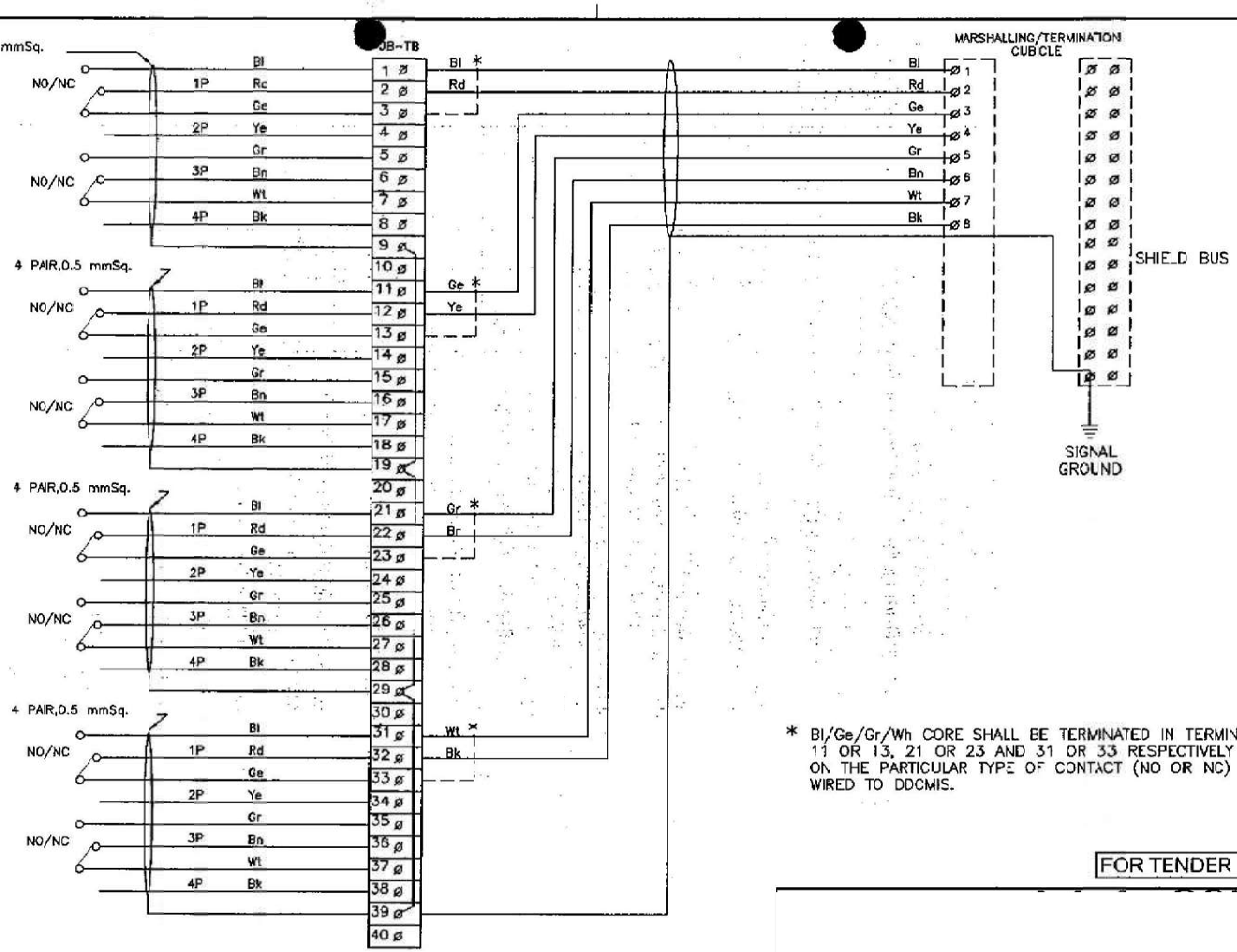

* Bl/Ge/Gr/Wh CORE SHALL BE TERMINATED IN TERMINAL 1 OR 3, 11 OR 13, 21 OR 23 AND 31 OR 33 RESPECTIVELY DEPENDING ON THE PARTICULAR TYPE OF CONTACT (NO OR NC) IS TO BE WIRED TO DDCMIS.

FOR TENDER PURPOSE ONLY

REV.NO.	DESCRIPTION	DRAWN	DESIGN	CHKD.	M	E	C	C&I	ARCH.	APPD	DATE
A	FIRST ISSUE										29.04.06

CLEARED BY

TITLE: INTERFACING OF FIELD INSTRUMENTS SWITCH TERMINATION DETAILS NO/NC

SIZE	SCALE	DRG. NO.	REV. NO.
A3	NTS	0000-999-POI-A-065 SH 02 OF 14	A

This document is the property of NATIONAL THERMAL POWER CORPORATION LTD.
No part of this document will be reproduced by any means without the written permission.

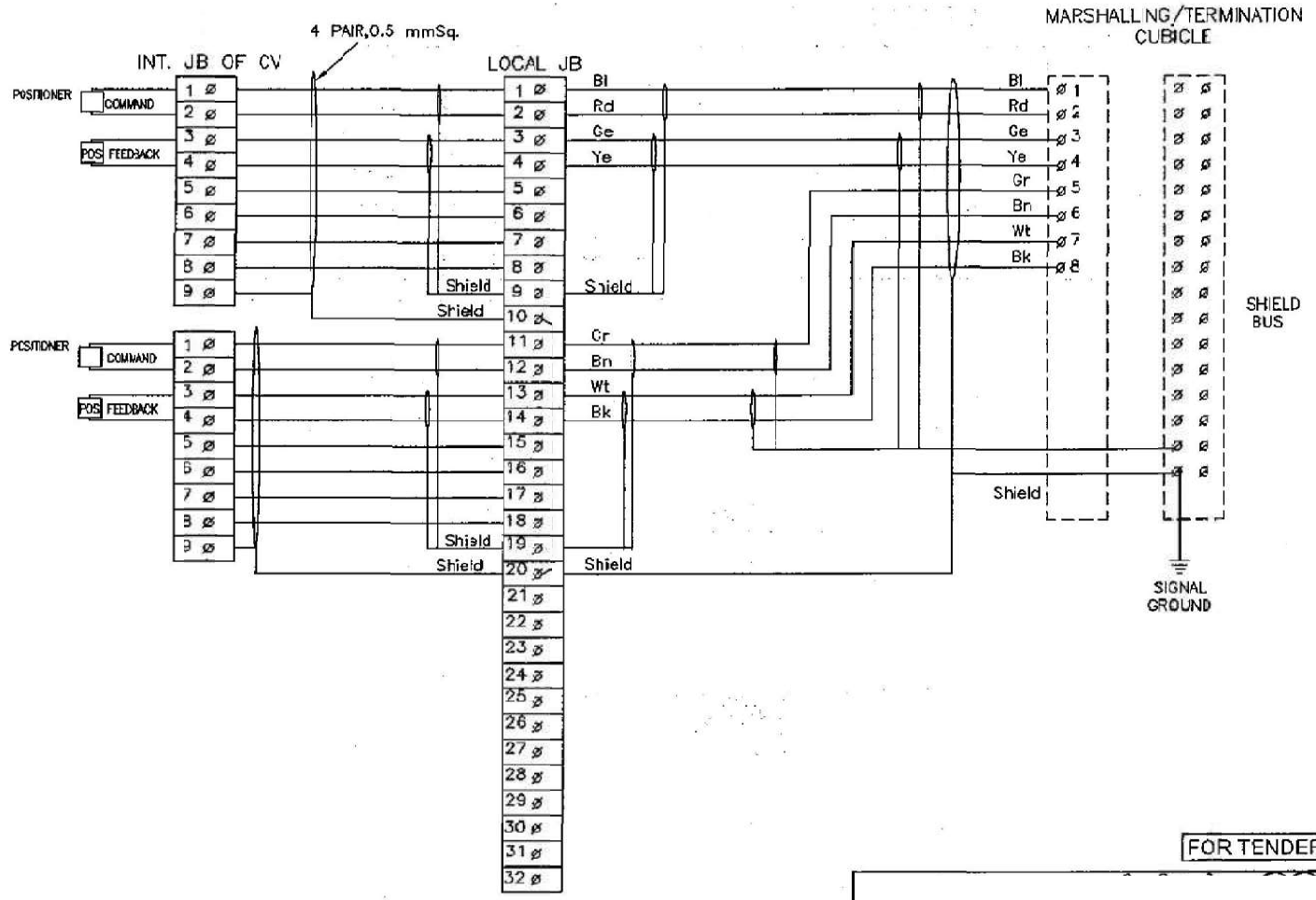

FOR TENDER PURPOSE ONLY

This document is the property of NATIONAL THERMAL POWER CORPORATION LTD.
No part of this document will be reproduced by any means without the written permission.

REV.NO.	DESCRIPTION	DRAWN	DESIGN	CHKD.	M	E	C	C&I	ARCH.	APPD	DATE
A	FIRST ISSUE										29.04.06

CLEARED BY

TITLE: INTERFACING OF FIELD INSTRUMENTS CONTROL VALVE

SIZE	SCALE	DRG. NO.	REV. NO.
A3	NTS	0000-999-POI-A-065 SH 03 OF 14	A

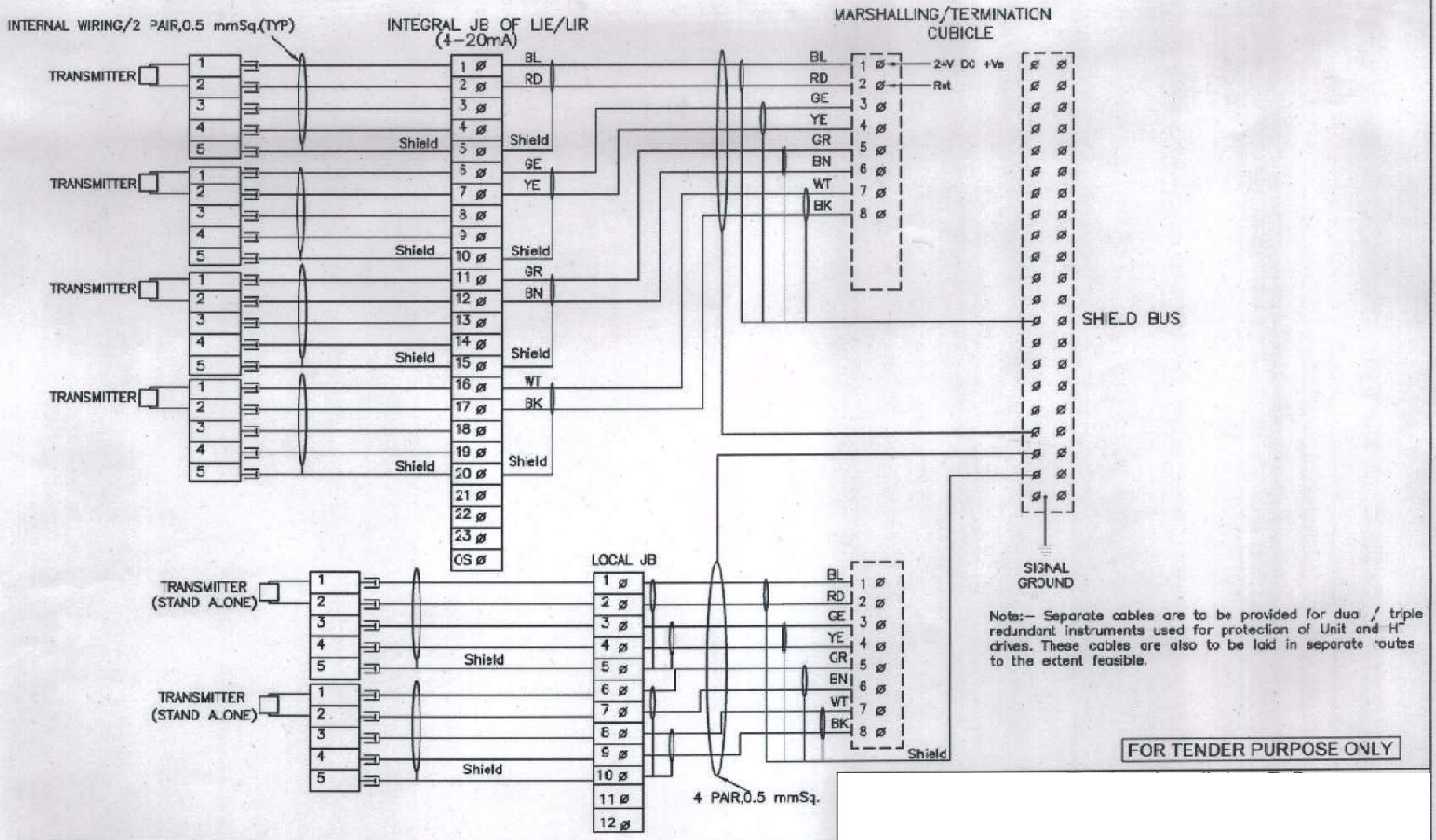

Note:- Separate cables are to be provided for dua / triple redundant instruments used for protection of Unit and HT drives. These cables are also to be laid in separate routes to the extent feasible.

FOR TENDER PURPOSE ONLY

This document is the property of NATIONAL THERMAL POWER CORPORATION LTD.
No part of this document will be reproduced by any means without the written permission.

REV.NO.	DESCRIPTION	DRAWN	DESIGN	CHKD.	M	E	C	C&I	ARCH.	APPD	DATE
C	NOTE REGARDING CABLE IS ADDED.										10.12.13
B	INTERNAL WIRING FOR LIE/LIR MOUNTED SHOWN WIRING OF STAND ALONE TXTR SHOWN										10.12.06
A	FIRST ISSUE										12.1.05

CLEARED BY

TITLE	SIZE	SCALE	DRG. NO.	REV. NO.
INTERFACING OF FIELD INSTRUMENTS 4-20mA	A3	NTS	0000-999-POI-A-055 SH 04 OF 14	C

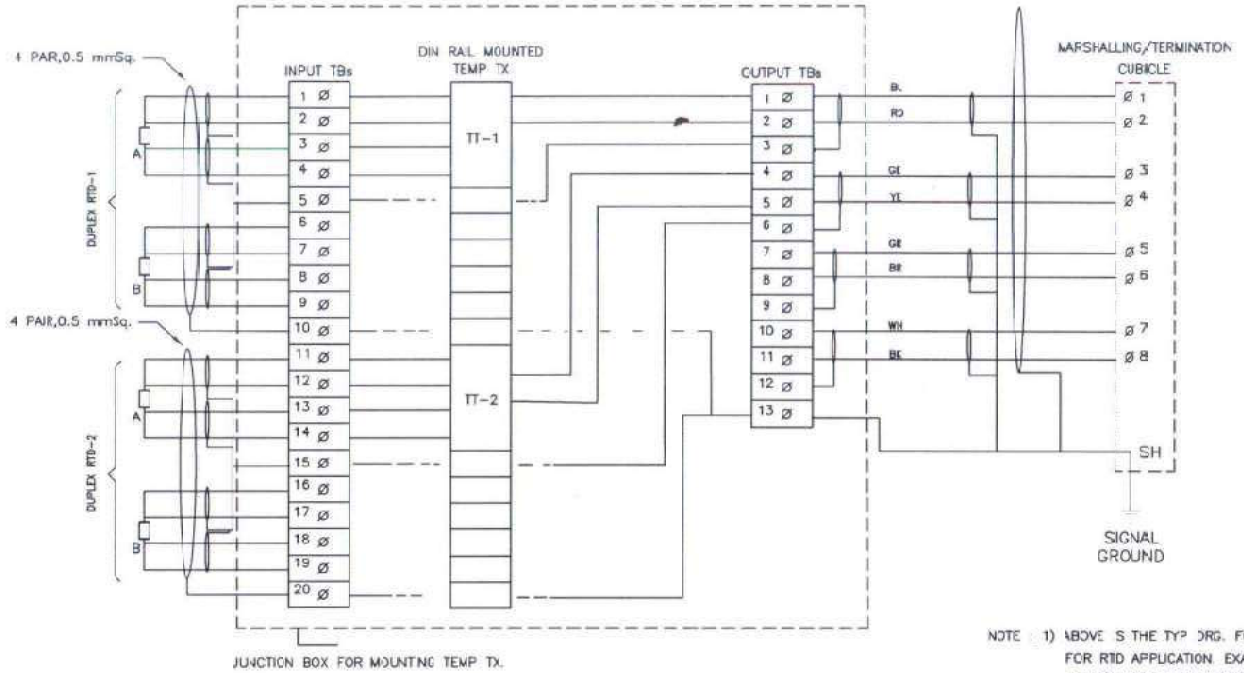

NOTE : 1) ABOVE IS THE TYP DRG. FOR DIN RAIL MOUNTED TEMP TRANSMITTERS FOR RTD APPLICATION. EXACT TYPE OF TEMP TRANSMITTER SHALL BE AS PER PART-A OF SPECIFICATION.

2) THE EXACT GROUPING OF TEMP TXs SHALL BE FINALISED DURING DETAILED ENGG. STAGE.

FOR TENDER PURPOSE ONLY

REV. NO.	DESCRIPTION	DRAWN	DESIGN	CHKD.	M	E	C	C&I	ARCH.	APPD	DATE
A	FIRST ISSUE										25.04.06

CLEARED BY

TITLE: INTERFACING OF FIELD INSTRUMENTS
TYPICAL RTD CONNECTION WITH TEMP TRANSMITTERS IN JBs

SIZE	SCALE	DRG. NO.	REV. NO.
A3	NTS	0000-999-POI-A-065 SH 06 OF 14	C

This document is the property of NATIONAL THERMAL POWER CORPORATION LTD.
No part of this document will be reproduced by any means without the written permission.

This document is the property of NATIONAL THERMAL POWER CORPORATION LTD.
No part of this document will be reproduced by any means without the written permission.

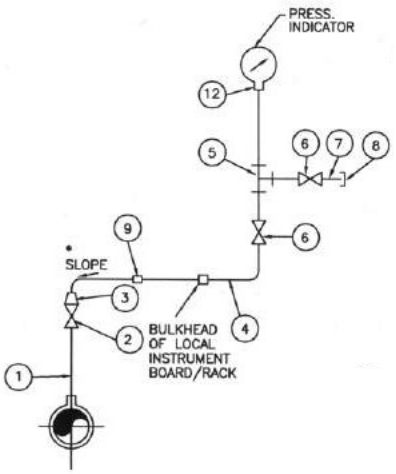

ELEVATION
INST./ SERVICE AIR

(PRESSURE INDICATORS MOUNTED REMOTE FROM INSTRUMENT SOURCE POINT)

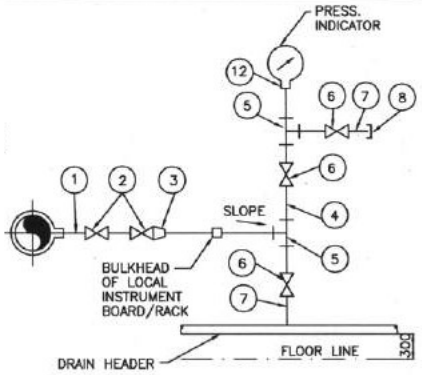

ELEVATION
LIQUID SOURCE

(GAUGE MOUNTED ABOVE INSTRUMENT SOURCE POINT)

LIST OF MATERIALS

ITEM NO.	DESCRIPTION
1.	1/2" , 3/4" , 1" NPS SCH 40/80/160/XXS/P91 (AS PER PROCESS REQUIREMENT) NIPPLE OF MATERIAL SAME AS THAT OF MAIN PIPE.
2.	1/2"/3/4"/1' SW GLOBE VALVE/GATE VALVE
3.	3/4" / 1" x 1/2" SW REDUCING INSERT
4.	1/2" / 3/4" PIPE
5.	1/2" / 3/4" SW EQUAL TEE
6.	1/2" / 3/4" SW GLOBE VALVE.
7.	1/2" / 3/4" NPS SW x 1/2" / 3/4" NPT(M) CARBON/ALLOY STEEL NIPPLE.
8.	1/2" / 3/4" NPT(F) CAP.
9.	1/2" / 3/4" PIPE UNION.
10.	6" SS SYPHON
11.	1/2" BLIND 300lbs RF ANSI FLANGE DRILLED AND TAPED FOR 1" NPT PIPE.
12.	SUITABLE ADAPTER.
13.	1/4" CHROME MOLY STEEL TUBE.
14.	
15.	1"/3/4" SW EQUAL TEE.
16.	DIAPHRAGM(WAFER ELEMENT)
17.	ISOLATION VALVE 316 SS,1/4"SW

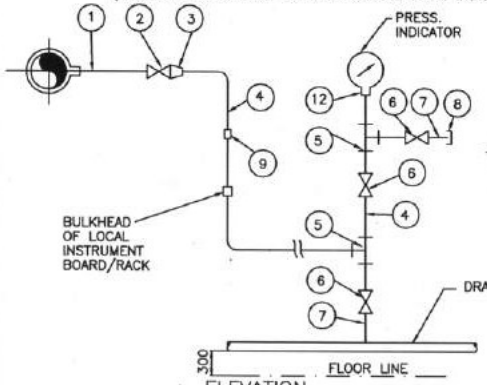

ELEVATION
LIQUID SOURCE

(GAUGE MOUNTED BELOW INSTRUMENT SOURCE POINT)

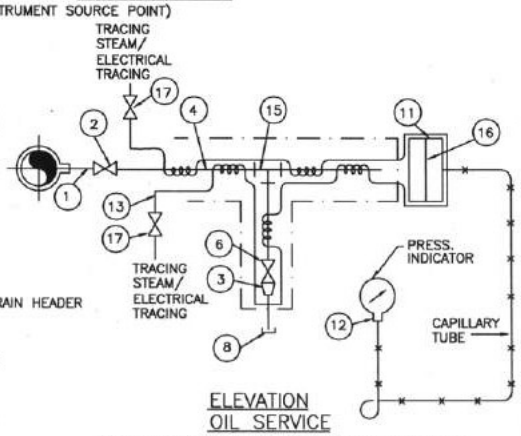

ELEVATION
OIL SERVICE

(GAUGE MOUNTED BELOW INSTRUMENT SOURCE POINT)

NOTES:-

1. THE MATERIAL SPECIFICATION AND SCHEDULE NO. OF IMPULSE PIPE & NIPPLE AS LISTED HEREIN SHALL BE AS PER TECHNICAL SPECIFICATIONS.
2. THE MATERIAL SPECIFICATION AND RATING OF FITTINGS AS LISTED SHALL BE AS PER SPECIFICATIONS. WELDED/THREADED FITTINGS SHALL CONFIRM TO ANSI-B.16-11.
3. INSTRUMENTS VALVES BODY STEM MATERIAL AND PRESSURE CLASS SHALL BE AS PER TECHNICAL SPECIFICATIONS.
4. FOR BOILER AIR/FLUE GAS SERVICES SOURCE CONNECTIONS IMPULSE PIPING AND ALL FITTINGS SHALL BE OF 3/4" NB SIZE.
5. GAUGES SHALL NOT BE MOUNTED ON THE PIPE. IT WILL BE MOUNTED ON A CHANNEL OR FRAME OR A RACK..
6. * SLOPE APPROX. 50 MM / METRE.

FOR TENDER PURPOSE ONLY

REV.NO.	DESCRIPTION	DRAWN	DESIGN	CHKD.	M	E	C	C&I	ARCH.	APPD	DATE
A	FIRST ISSUE							T.G.			21.08.12

CLEARED BY

TITLE: INSTRUMENT INSTALLATION DIAGRAM (FOR PRESSURE GAUGE)

SIZE	SCALE	DRG. NO.	REV. NO.
A3	N.T.S.	0000-999-POI-A-022	A

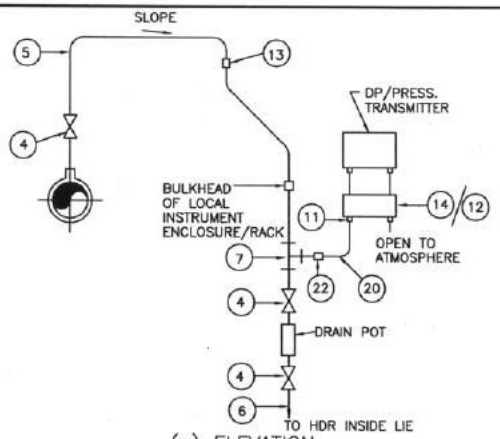

(a) ELEVATION

INST/SERVICE AIR PRESSURE MEASUREMENT

TRANSMITTER MOUNTED BELOW INSTRUMENT SOURCE POINT

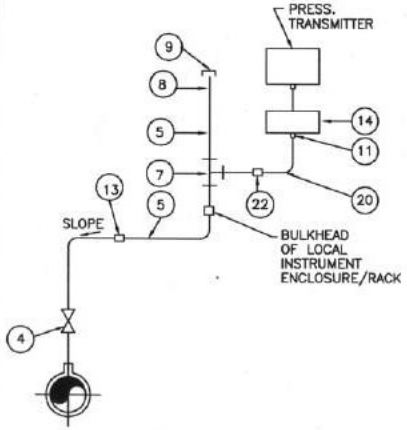

ELEVATION

INST/SERVICE AIR PRESSURE MEASUREMENT

TRANSMITTER MOUNTED ABOVE INSTRUMENT SOURCE POINT

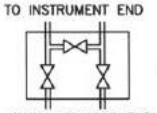

DETAIL OF 3-VALVE MANIFOLD

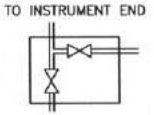

DETAIL OF 2-VALVE MANIFOLD

LIST OF MATERIALS

ITEM NO.	DESCRIPTION
1.	42 X 405 MM M.S. BLACK PIPE
2.	M42x2 TO 3/4" REDUCING INSERT
3.	M42x2(F) M.S.CAP
4.	3/4" SW GLOBE VALVE/GATE VALVE
5.	3/4" NPS PIPE
6.	3/4" NPS SW 3/4" NPT(M) CS/AS NIPPLE
7.	3/4" SW EQUAL TEE
8.	3/4" NPS SCH 80 CARBON/ALLOY STEEL NIPPLE
9.	3/4" NPT(F) CS/AS CAP
10.	3/4" SW CS/AS EQUAL CROSS
11.	1/2" TUBE ADOPTER
12.	3 VALVE MANIFOLD
13.	3/4" PIPE UNION
14.	2 VALVE MANIFOLD
15.	3/4" SW 4 WAY VALVE
16.	QUICK DISCONECT FITTING
17.	3/4"SWx1/2"SW BRANCH TEE
18.	1/2" NB SEAMLESS GI PIPE
19.	1/2" NPT (F) GI FITTING
20.	SS TUBE
21.	FLEXIBLE HOSE WITH ONE END SOCKET WELDED (PIPE SIDE) & OTHER END WITH SUITABLE FITTINGS.
22.	3/4" x 1/2" S.S. TUBE UNION

NOTES:-

1. SEE NOTES UNDER DRG. NO.0000-999-POI-A-022.
2. IMPULSE LINE DRAIN CONNECTIONS SHALL BE DONE AS PER TECHNICAL SPECIFICATIONS
3. THE SLOPE IN THE HORIZONTAL OF THE IMPULSE PIPE SHALL BE APPROX. 50 mm/mtr.
4. THE EXACT ORIENTATION OF THE TRANSMITTERS WITH RESPECT TO VALVE MANIFOLDS ETC. WILL BE FINALISED DURING DETAILED ENGINEERING KEEPING IN VIEW THE MANUFACTURER'S RECOMMENDATIONS.
5. COMMON INSTRUMENT AIR HEADER (1"NB) USING REDUNDANT AIR FILTER REGULATORS WILL BE MADE IN EACH TRANSMITTER ENCLOSURE REQUIRING PURGE AIR. PURGE AIR FOR EACH INSTRUMENT LINE SHALL BE TAPPED FROM THIS HEADER USING INDIVIDUAL PURGE ROTAMETERS AS SHOWN IN DRG. NO. 0000-999-POI-A-034 TYPICALLY.

FOR TENDER PURPOSE ONLY

This document is the property of NATIONAL THERMAL POWER CORPORATION LTD.
No part of this document will be reproduced by any means without the written permission.

REV.NO.	DESCRIPTION	DRAWN	DESIGN	CHKD.	M	E	C	C&I	ARCH.	APPD	DATE
A	FIRST ISSUE							T.G.			21.08.12

CLEARED BY

TITLE: INSTRUMENT INSTALLATION DIAGRAM (PRESSURE MEASUREMENT USING PRESS / DP TRANSMITTERS (INST./SERVICE, DIRTY AIR/FLUE GAS)

SIZE	SCALE	DRG. NO.	REV. NO.
A3	N.T.S.	0000-999-POI-A-023	A

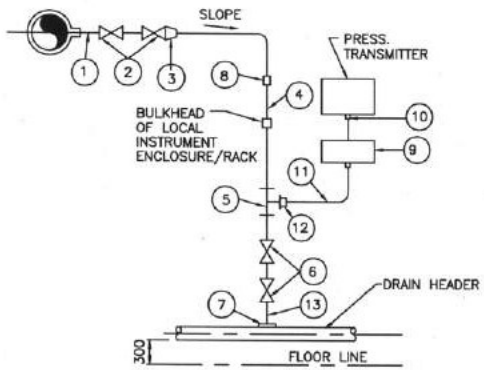

ELEVATION

TRANSMITTER MOUNTED BELOW INSTRUMENT SOURCE POINT

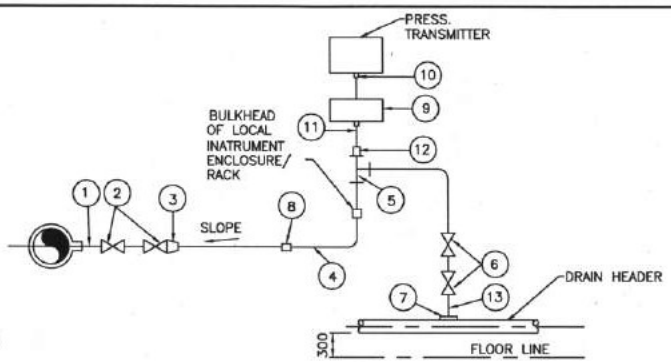

ELEVATION

TRANSMITTER MOUNTED ABOVE INSTRUMENT SOURCE POINT

LIQUID PRESSURE MEASUREMENT

LIST OF MATERIALS

ITEM NO.	DESCRIPTION
1.	1/2" / 3/4" / 1" NPS SCH. 80/160/XXS/P91 NIPPLE OF MATERIAL SAME AS THAT OF MAIN PIPE.
2.	3/4"/1" SW GLOBE VALVE.
3.	3/4"/1" TO 1/2" REDUCING INSERT
4.	1/2" NPS PIPE
5.	1/2" SW EQUAL TEE
6.	1/2"SW GLOBE VALVE
7.	1/2"NPS SCH. 80/160 SWx1/2"CS/AS COUPLER
8.	1/2" PIPE UNION
9.	2/3 VALVE MANIFOLD (FOR DETAIL SEE DRAWING NO.0000-102-POI-A-023.
10.	SUITABLE ADAPTER
11.	SS TUBE
12.	1/2" PIPE x 1/2"TUBE UNION
13.	1/2"NPS SCH. 80/160 SWx1/2" NPT(M) CS/AS NIPPLE

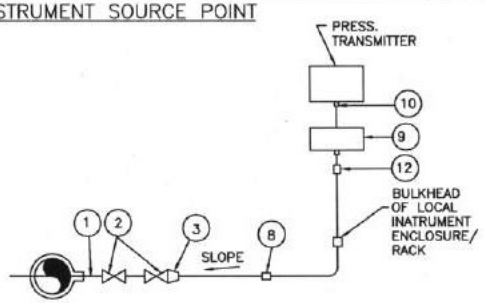

ELEVATION

VACCUM PRESSURE MEASUREMENT

NOTES:-

1. SAME NOTES UNDER DRG. NO. 0000-999-POI-A-023.
2. FOR VACUUM APPLICATION OTHER PORT OF TRANSMITTER SHALL BE KEPT OPEN TO ATMOSPHERE.

FOR TENDER PURPOSE ONLY

This document is the property of NATIONAL THERMAL POWER CORPORATION LTD.
No part of this document will be reproduced by any means without the written permission.

REV.NO.	DESCRIPTION	DRAWN	DESIGN	CHKD.	M	E	C	C&I	ARCH.	APPD	DATE
A	FIRST ISSUE							T.G.			21.08.12

CLEARED BY

TITLE: INSTRUMENT INSTALLATION DIAGRAM (PRESSURE MEASUREMENT USING PRESS /DP TRANSMITTERS STEAM/LIQUID VACUUM)

SIZE	SCALE	DRG. NO.	REV. NO.
A3	N.T.S.	0000-999-POI-A-025	A

This document is the property of NATIONAL THERMAL POWER CORPORATION LTD.
No part of this document will be reproduced by any means without the written permission.

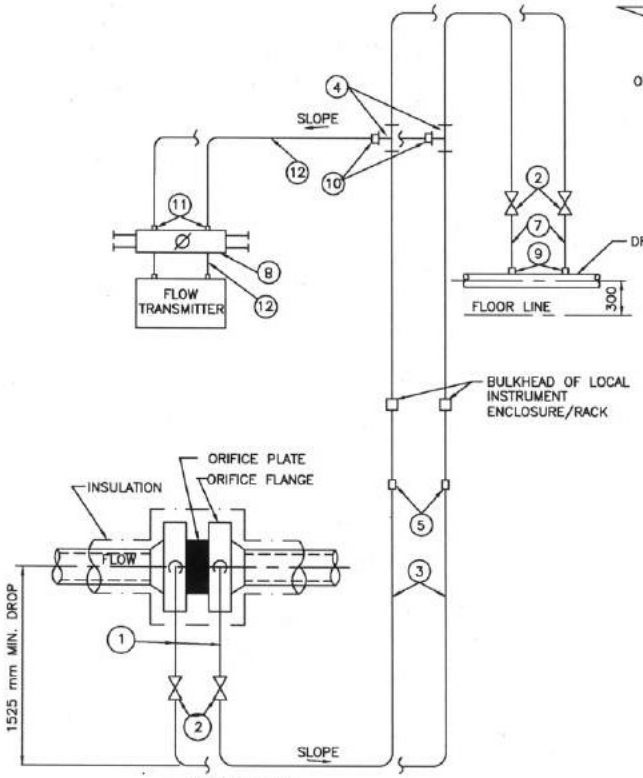

ELEVATION

HORIZONTAL PIPE RUN

TRANSMITTER MOUNTED ABOVE INSTRUMENT SOURCE POINT

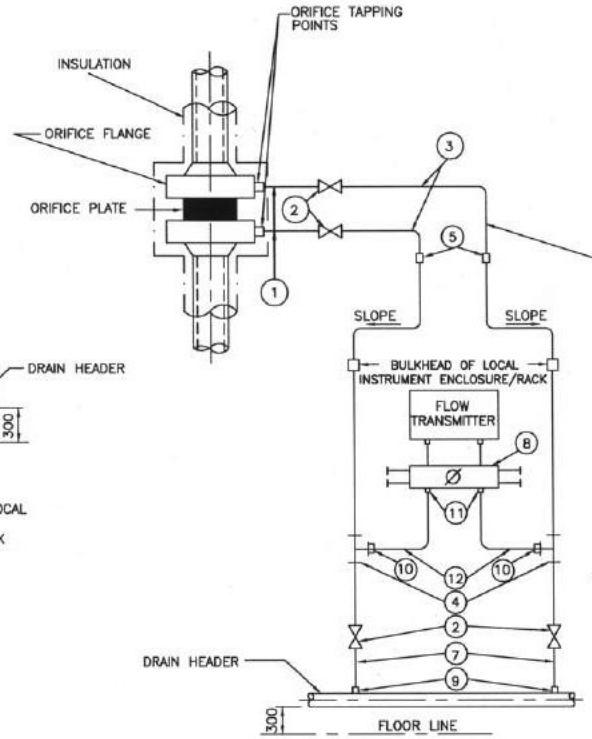

ELEVATION

VERTICAL PIPE RUN

TRANSMITTER MOUNTED BELOW INSTRUMENT SOURCE POINT

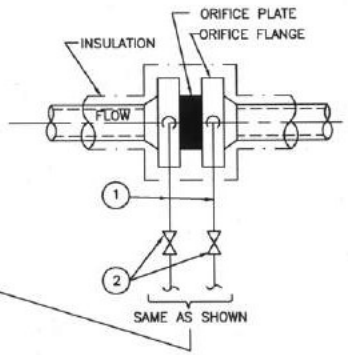

ELEVATION

HORIZONTAL PIPE RUN

LIST OF MATERIALS

ITEM NO.	DESCRIPTION
1.	1/2"NPS SCH. 80 NIPPLE OF MATERIAL SAME AS THAT OF MAIN PIPE WITH NECESSARY ATTACHMENT TO FLANGE OF ORIFICE
2.	1/2"SW GLOBE VALVE.
3.	1/2" NPS PIPE
4.	1/2" SW EQUAL TEE
5.	1/2" PIPE UNION
6.	–
7.	1/2"NPS SCH. 80 SWx1/2"NPT (M) S.S. NIPPLE
8.	5 VALVE MANIFOLD FOR DETAIL REFER DRAWING NO.0000-102-POI-A-026.
9.	1/2" T SW HALF COUPLET
10.	1/2" PIPE x 1/2" TUBE UNION
11.	SUITABLE ADAPTER
12.	SS TUBE

NOTES:–

1. SAME NOTES AS UNDER DRG. NO. 0000-999-POI-A-023.

FOR TENDER PURPOSE ONLY

REV.NO.	DESCRIPTION	DRAWN	DESIGN	CHKD.	M	E	C	C&I	ARCH.	APPD	DATE
A	FIRST ISSUE							T.G.			21.08.12

CLEARED BY

TITLE: INSTRUMENT INSTALLATION DIAGRAM
FLOW MEASUREMENT (USING ORIFICE PLATES)
CONDENSATE & SERVICE WATER

SIZE	SCALE	DRG. NO.	REV. NO.
A3	N.T.S.	0000-999-POI-A-027	A

This document is the property of NATIONAL THERMAL POWER CORPORATION LTD.
No part of this document will be reproduced by any means without the written permission.

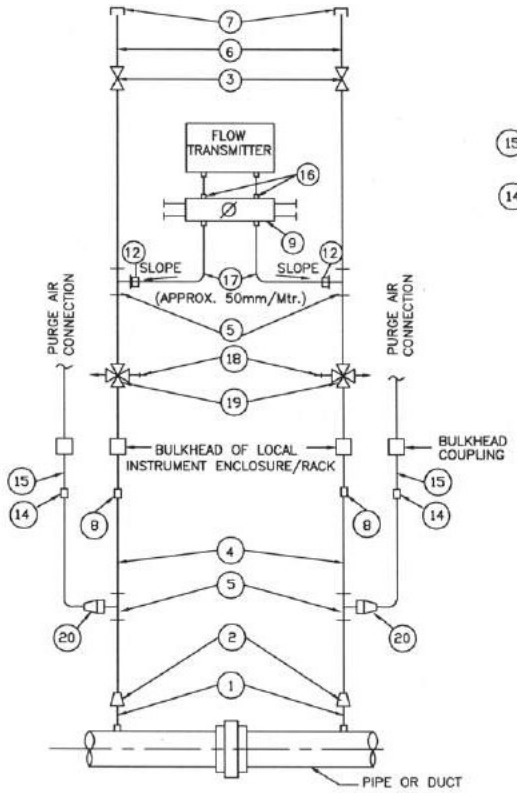

ELEVATION

TRANSMITTER MOUNTED ABOVE INSTRUMENT SOURCE POINT

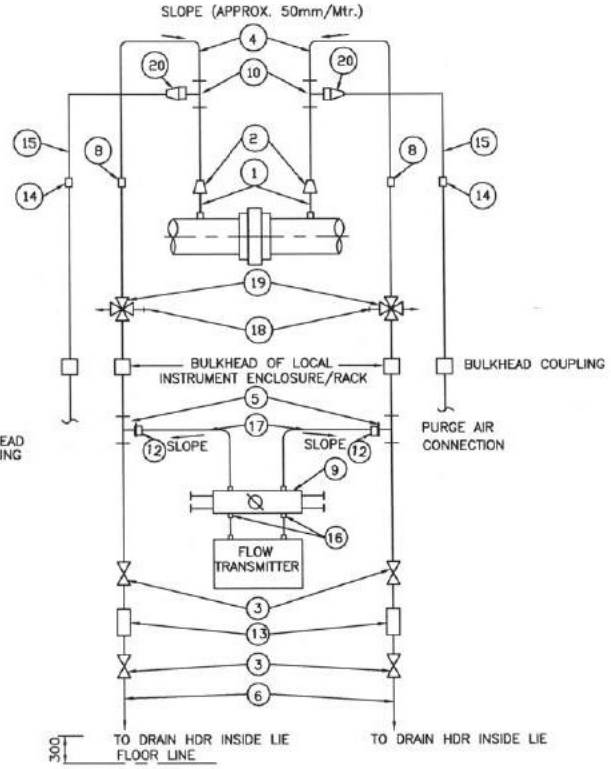

ELEVATION

TRANSMITTER MOUNTED BELOW INSTRUMENT SOURCE POINT

LIST OF MATERIALS

ITEM NO.	DESCRIPTION
1.	42x4.05mm M.S. BLACK PIPE.
2.	M 42x2 TO 3/4"SW REDUCING INSERT.
3.	3/4" SW GLOBE VALVE.
4.	3/4" PIPE.
5.	3/4" SW EQUAL TEE.
6.	3/4" SCH. 80 SWx3/4" NPT (M) CS/AS NIPPLE
7.	3/4" NPT (F) CAP.
8.	3/4" PIPE UNION.
9.	5 VALVE MANIFOLD FOR DETAIL REFER DRAWING NO.0000-102-POI-A-026.
10.	3/4" SW EQUAL TEE.
11.	3/4" SW GATE VALVE.
12.	3/4" PIPE x 1/2" TUBE UNION
13.	DRAIN POT.
14.	1/2" GI FITTING
15.	1/2" NB GI PIPE
16.	SUITABLE ADAPTER
17.	SS TUBE
18.	QUICK DISCONNECT FITTINGS.
19.	3/4" SW 4 WAY VALVE.
20.	3/4" x1/2" REDUCER.

NOTES:-

1. SAME NOTES AS UNDER DRG. NO. 0000-999-POI-A-023.

FOR TENDER PURPOSE ONLY

AIR/GAS FLOW MEASUREMENT USING HEAD TYPE PRIMARY ELEMENT

REV.NO.	DESCRIPTION	DRAWN	DESIGN	CHKD.	M	E	C	C&I	ARCH.	APPD	DATE
A	FIRST ISSUE							T.G.			21.08.12

CLEARED BY

TITLE: INSTRUMENT INSTALLATION DIAGRAM (FLOW MEASUREMENT AIR/GAS)

SIZE	SCALE	DRG. NO.	REV. NO.
A3	N.T.S.	0000-999-POI-A-028	B

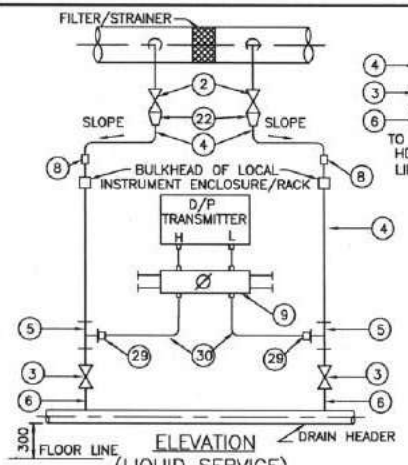

ELEVATION
(LIQUID SERVICE)

TRANSMITTER MOUNTED BELOW INSTRUMENT SOURCE POINT

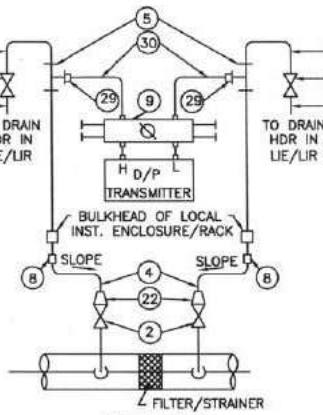

ELEVATION
(LIQUID SERVICE)

TRANSMITTER MOUNTED ABOVE INSTRUMENT SOURCE POINT

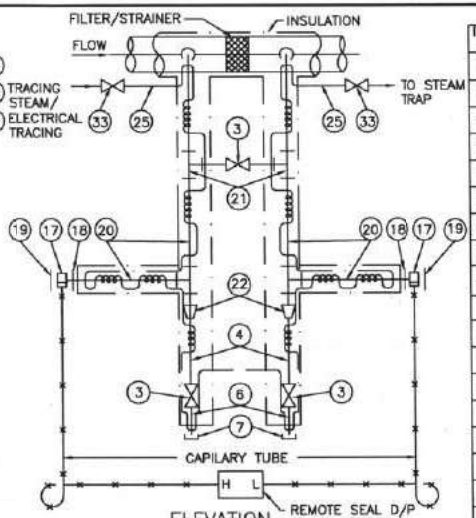

ELEVATION
OIL SERVICE

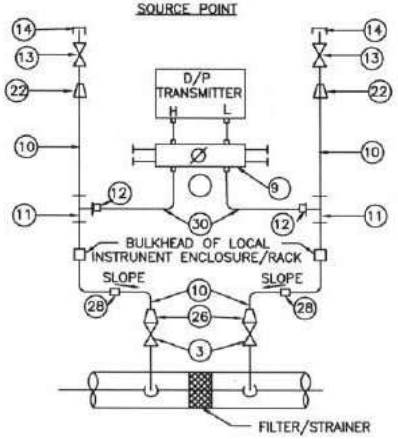

ELEVATION
CLEAN GAS/AIR SERVICE

TRANSMITTER MOUNTED ABOVE INSTRUMENT SOURCE POINT
DIFFERENTIAL PRESSURE MEASUREMENT

1. SAME NOTES AS UNDER DRG. NO. 0000-999-POI-A-023.

FOR TENDER PURPOSE ONLY

LIST OF MATERIALS

ITEM NO.	DESCRIPTION
1.	42x2 TO 3/4" SW REDUCING INSERT.
2.	3/4" SW GLOBE VALVE.
3.	1/2" SW GLOBE VALVE FOR LIQUID APPLICATION & 3/4"/1" IN GAS/AIR APPLICATION
4.	1/2" NPS 40/80/160 (AS PER PROCESS REQUIREMENT) CARBON/ALLOY STEEL PIPE.
5.	1/2" SW EQUAL TEE.
6.	1/2" NPS SW x 1/2" NPT (M) NIPPLE.
7.	1/2" NPT (F) CAP.
8.	1/2" PIPE x 1/2" PIPE UNION.
9.	5 VALVE MANIFOLD (FOR DETAIL REFER DRAWING NO.0000-999-POI-A-026.
10.	3/4" SCH 80 CARBON/ALLOY STEEL PIPE.
11.	3/4"/1/2" SW EQUAL TEE.
12.	3/4"x1/2" TUBE UNION.
13.	1/2" SCREWED GLOBE VALVE.
14.	1/2" NPT (M) PLUG.
15.	3/4" SW GATE VALVE.
16.	3/4" SW EQUAL CROSS.
17.	WAFER ELEMENT FOR USE WITH 3"ANSI R.F. VALVE.
18.	3"BLIND 300lbs R.F. WELD NECK FLANGE DRILLED FOR 1" SCH. 40/80 PIPE.
19.	3" BLIND FLANGE.
20.	1"NPS SCH. 40/80 (AS PER PROCESS REQUIREMENT) CS PIPE.
21.	1" SW EQUAL TEE.
22.	3/4" x 1/2"SW REDUCING INSERT.
23.	3/4" SW x 3/4" NPT (M) CS/AS NIPPLE
24.	3/4" NPT (F) CS/AS CAP.
25.	1/4" NPS ALLOY STEEL PIPE.
26.	1" x 3/4" SW REDUCING INSERT.
27.	3/4" SW x 1/2" PSW BRANCH TEE.
28.	3/4" PIPE UNION
29.	1/2" CLAMP UNION (THREADED) SUITABLE FOR FLEXIBLE CONNECTION OF NYLON REINFORCED PVC TUBE.
30.	SS TUBE
31.	3/4" SW 4 WAY VALVE.
32.	QUICK DISCONNECT FITTINGS.
33.	1/4" SW ISOLATION VALVE 316SS
34.	1/2" x 1/2" SS PIPE UNION.

This document is the property of NATIONAL THERMAL POWER CORPORATION LTD.
No part of this document will be reproduced by any means without the written permission.

REV.NO.	DESCRIPTION	DRAWN	DESIGN	CHKD.	M	E	C	C&I	ARCH.	APPD	DATE
A	FIRST ISSUE							T.G.			21.08.12

CLEARED BY

TITLE
INSTRUMENT INSTALLATION DIAGRAM
DIFF. PRESS.MEASUREMENT (LIQUID, OIL, AIR/GAS SERVICE)

SIZE	SCALE	DRG. NO.	REV. NO.
A3	N.T.S.	0000-999-POI-A-030	A

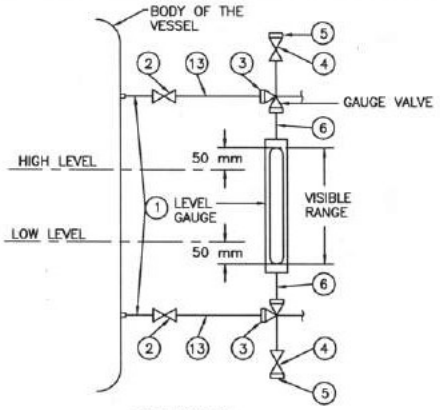

ELEVATION

LOCAL LEVEL INDICATION USING GAUGE GLASS

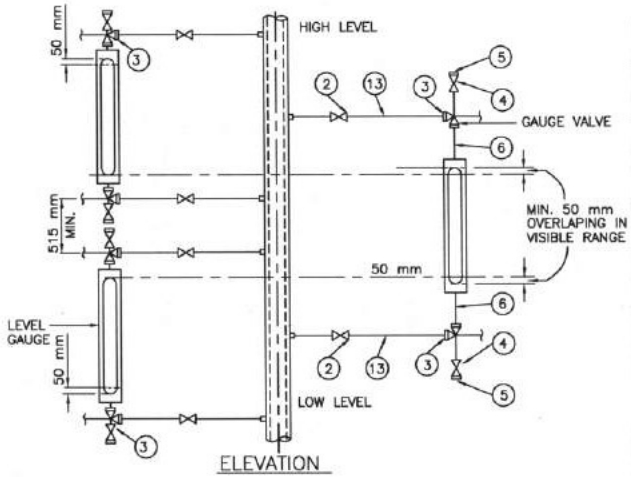

ELEVATION

LOCAL LEVEL INDICATION USING MULTIPLE GAUGES FOR INCREASED RANGE NOT COVERED IN A SINGLE UNIT

LIST OF MATERIALS

ITEM NO.	DESCRIPTION
1.	3/4"/1" NPS SCH.40/80/160/P91 (AS PER PROCESS REQUIREMENT) CARBON /ALLOY STEEL PIPE.
2.	3/4" SW GLOBE VALVE.
3.	3/4" SW UNION.
4.	3/4" NPT GLOBE VALVE.
5.	3/4" NPT (M) CAP.
6.	3/4" NPT (F) UNION CONNECTION.
7.	1" SW EQUAL UNION.
8.	1" x 1/2" SW REDUCING INSERT.
9.	1" SW EQUAL TEE.
10.	1/2" SW GLOBE VALVE.
11.	1/2" NPS SWx1/2" NPT(M) CS/AS NIPPLE.
12.	1/2" NPT (F) CAP
13.	3/4"x1/2" NPS SCH.40/80 CS/AS PIPE.
14.	1/2" NPS SCH.80/160 CS/AS NIPPLE.
15.	1" SW GLOBE VALVE.

NOTES:-

1. FOR LEVEL GAUGE 3/4" AND FOR LEVEL SWITCH 1" PROCESS CONNECTION SHALL BE PROVIDED.
2. NOTES UNDER DRG. NO. 0000-999-POI-A-023 (WHICHEVER ARE RELEVENT).

FOR TENDER PURPOSE ONLY

REV.NO.	DESCRIPTION	DRAWN	DESIGN	CHKD.	M	E	C	C&I	ARCH.	APPD	DATE
A	FIRST ISSUE							F.G.			21.08.12

CLEARED BY

TITLE: INSTRUMENT INSTALLATION DIAGRAM (LEVEL GAUGE & SWITCHES)

SIZE	SCALE	DRG. NO.	REV. NO.
A3	N.T.S.	0000-999-POI-A-031	A

This document is the property of NATIONAL THERMAL POWER CORPORATION LTD.
No part of this document will be reproduced by any means without the written permission.

This document is the property of NATIONAL THERMAL POWER CORPORATION LTD.
No part of this document will be reproduced by any means without the written permission.

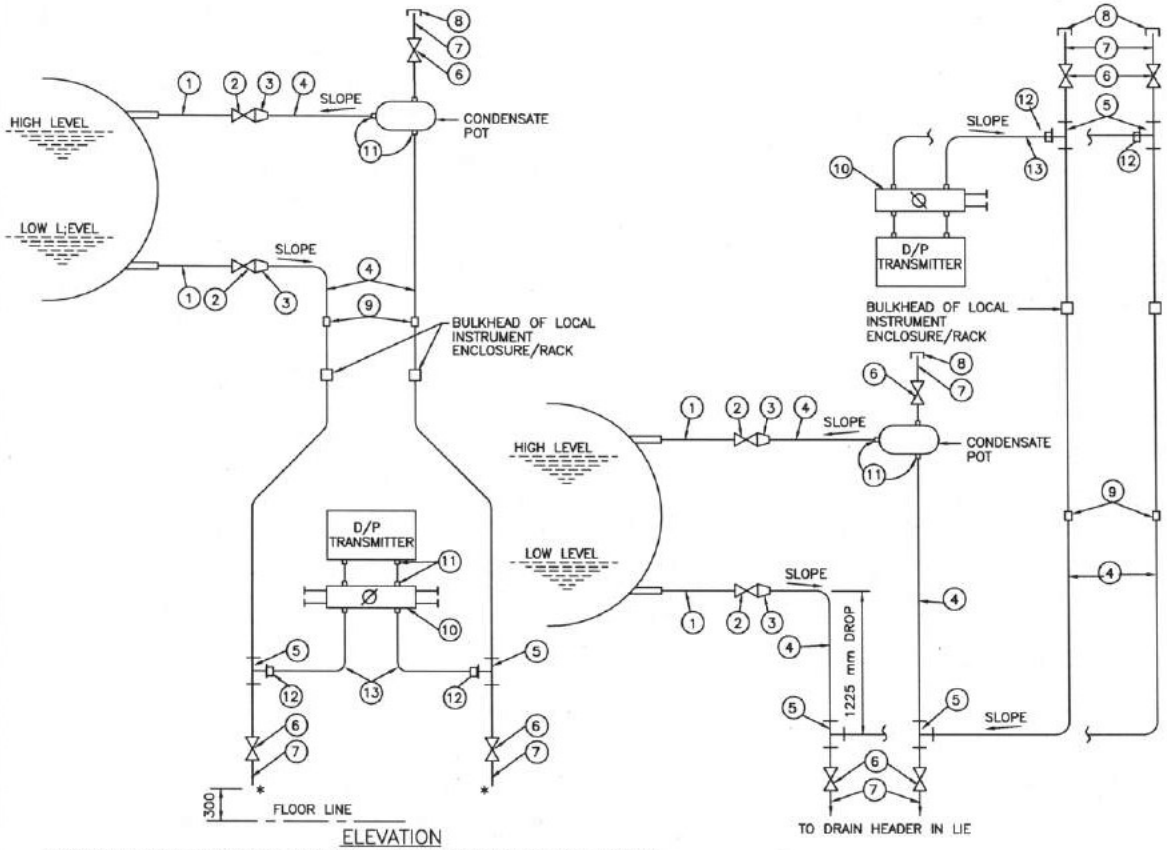

ELEVATION
TRANSMITTER MOUNTED BELOW INSTRUMENT SOURCE POINT

ELEVATION
TRANSMITTER MOUNTED ABOVE INSTRUMENT SOURCE POINT

LIST OF MATERIALS

ITEM NO.	DESCRIPTION
1.	1" NPS SCH.40/80/160/XXS/P91 (AS PER PROCESS REQUIREMENT) CARBON /ALLOY STEEL PIPE.
2.	1" SW GLOBE VALVE.
3.	3/4"/1" TO 1/2" REDUCING INSERT.
4.	1/2" NPS SCH.80/160/XXS(AS PER PROCESS REQ.)CS/AS PIPE.
5.	1/2" SW EQUAL TEE.
6.	1/2" SW GLOBE VALVE.
7.	1/2" NPS SWx1/2" NPT(M) CS/AS NIPPLE.
8.	1/2 NPT (F) CAP.
9.	1/2" PIPE UNION.
10.	5-VALVE MANIFOLD (FOR DETAILS REF. DRG. NO.0000-999-POI-A-026.
11.	SUITABLE ADAPTER.
12.	1/2" PIPE x 1/2" TUBE UNION.
13.	S.S. TUBE.

NOTES:-

1. SAME NOTES AS UNDER DRG. NO.0000-999-POI-A-023. (WHICHEVER ARE RELEVENT).

* TO DRAIN HEADER IN LIE/LIR.

FOR TENDER PURPOSE ONLY

LEVEL MEASUREMENT OF CLEAR NON-VISCOUS OR NON-CORROSIVE LIQUID IN CLOSED VESSEL WITH CONDENSABLE ATMOSPHERE USING D/P TRANSMITTER

REV.NO.	DESCRIPTION	DRAWN	DESIGN	CHKD.	M	E	C	C&I	ARCH.	APPD	DATE
A	FIRST ISSUE							T.G.			21.08.12

CLEARED BY

TITLE: INSTRUMENT INSTALLATION DIAGRAM (LEVEL MEASUREMENT USING D/P TRANSMITTERS)

SIZE	SCALE	DRG. NO.	REV. NO.
A3	N.T.S.	0000-999-POI-A-032 SH 1 OF 2	A

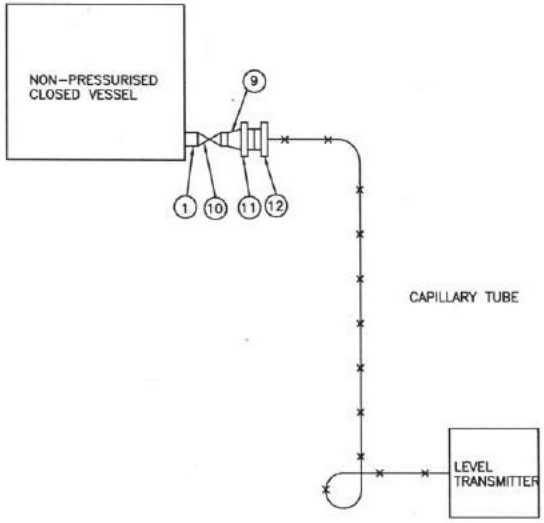

ELEVATION

LEVEL MEASUREMENT OF VISCOUS OR CORROSIVE LIQUID IN CLOSED VESSEL USING FLUSH DIAPHRAGM/WAFER TYPE LEVEL TRANSMITTER WITH REMOTE SEAL

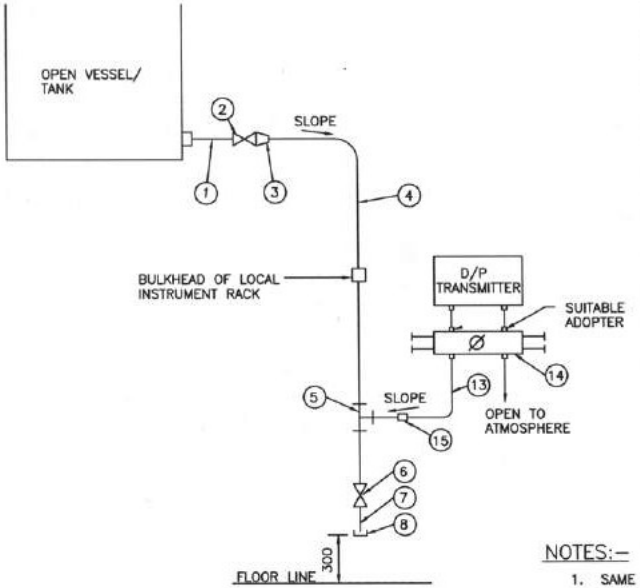

ELEVATION

LEVEL MEASUREMENT OF CLEAN LIQUID IN AN OPEN VESSEL USING D/P TRANSMITTER

LIST OF MATERIALS

ITEM NO.	DESCRIPTION
1.	3/4"/ 1" NPS 40/80 PIPE.
2.	3/4" SW GLOBE VALVE.
3.	3/4"/ 1/2" SW REDUCING INSERT.
4.	1/2" NPS SCH. 40/80 PIPE.
5.	1/2" SW EQUAL TEE.
6.	1/2" SW GLOBE VALVE.
7.	1/2" NPS SWx1/2" NPT(M) NIPPLE.
8.	1/2" NPT (F) CAP.
9.	3/4" TO 4" EXPANDER.
10.	3/4" BUTT WELDED GATE VALVE.
11.	4" ANSI 300 lbs R.F. WELD NECK FLANGE.
12.	4"ANSI MATCHING FLANGE WITH FLUSH DIAPHRAGM OF LEVEL TRANSMITTER
13.	SS TUBE.
14.	3-VALVE MANIFOLD (FOR DETAIL REF. DRG. NO. 0000-999-POI-A-023.
15.	1/2" PIPE x 1/2" TUBE UNION.

NOTES:-

1. SAME NOTES UNDER DRG. NO. 0000-999-POI-A-023.
2. FOR VACUUM APPLICATION OTHER PORT OF TRANSMITTER SHALL BE KEPT OPEN TO ATMOSPHERE.

FOR TENDER PURPOSE ONLY

REV.NO.	DESCRIPTION	DRAWN	DESIGN	CHKD.	M	E	C	C&I	ARCH.	APPD	DATE
A	FIRST ISSUE							T.G.			21.08.12

CLEARED BY

TITLE: INSTRUMENT INSTALLATION DIAGRAM (LEVEL MEASUREMENT-OPEN VESSEL)

SIZE	SCALE	DRG. NO.	REV. NO.
A3	N.T.S.	0000-999-POI-A-033	A

This document is the property of NATIONAL THERMAL POWER CORPORATION LTD.
No part of this document will be reproduced by any means without the written permission.

This document is the property of NATIONAL THERMAL POWER CORPORATION LTD.
No part of this document will be reproduced by any means without the written permission.

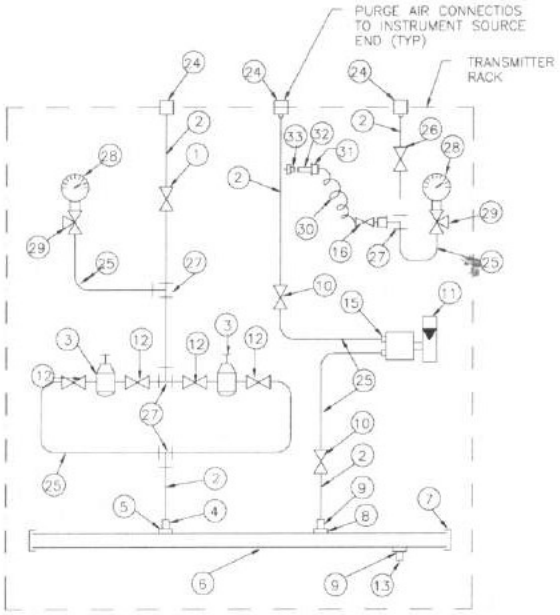

TYPICAL PURGE AIR CONNECTION INSIDE THE INST. ENCLOSURE

(APPLICABLE FOR AIR & FLUE GAS SERVICE INSTRUMENTS REQUIRING PURGE AIR)

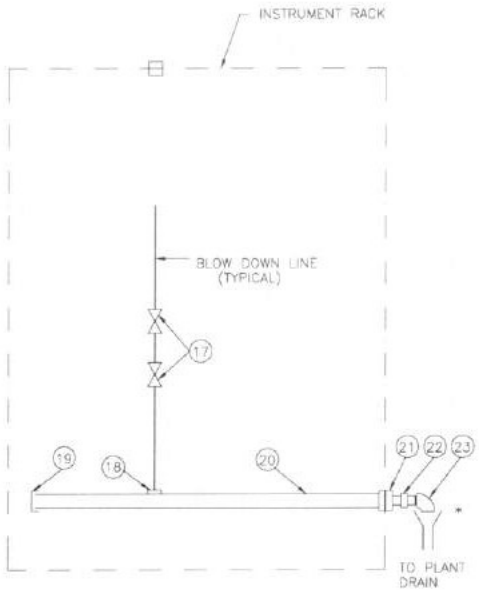

TYPICAL BLOW DOWN HEADER CONNECTION INSIDE THE INSTRUMENT RACK/ENCLOSURE

**

LIST OF MATERIALS

ITEM NO.	DESCRIPTION
1.	ISOLATION VALVE(gate/globe) SS.
2.	1/2" O.D. SEAMLESS SS PIPE.
3.	1/2" NPT (F) AIR FILTER REGULATOR.
4.	1/2" NPT x 1/2" O.D. (M) CONNECTOR SS.
5.	1/2" NPT (F) COUPLET SS.
6.	1" NB INST. AIR HEADER SS.
7.	1" PSB END CAP SS.
8.	1/2" NPT (F) COUPLET SS.
9.	1/2" NPT x 1/2" O.D. (M) CONNECTOR SS.
10.	1/2" COMP. NEEDLE VALVE SS.
11.	1/2" NPT (F) AIR PURGE SET.
12.	1/2" NPT (M) x 1/2" COMP. VALVE SS.
13.	1/2" NPT PLUG SS.
14.	
15.	1/2" TUBE SS CONNECTOR.
16.	1/2" TUBE COMP. EQUAL TEE UNION.
17.	DRAIN VALVE 1/2" SW FOR WTR/STM/COND & 3/4" FOR AIR/FLUE GAS.
18.	1/2" SW HALF COUPLET.
19.	2" SW CAP SS.
20.	2" NB ASTMA 105 GR. B SCH.80 BLOWDOWN HEADER
21.	2" PSW x 1" NPT (F) COUPLING.
22.	1" NPT x 1" BSP HEX NIPPLE.
23.	1" BSP ELBOW.
24.	BULKHEAD-SS 1/2" SWx1/2"NB THREADED, SUITABLE FOR GI PIPE CONNECTION
25.	1/2" O.D. SEAMLESS TUBE SS.
26.	1/2" SW PRESS. GAUGE ISOLATION VALVE SS.
27.	1/2" TUBE x 1/2" NPT (F) BRANCH TEE SS.
28.	4" DIAL x 1/2" NPT PR. GAUGE.
29.	1/2" SW x 1/2" NPT (F) PR. GAUGE VALVE SS.
30.	1/2" I.D. NYLON FLEX. HOSE BRAIDED WITH SS WIRE.
31.	1/2" NPT (M) x 1/2" HOSE BARBED CONN. SS.
32.	1/2" NPT (F) QUICK DISCONNECT SS.
33.	1/2" NPT (M) QUICKDISCONNECT SS.

NOTE:-

*1. DRAIN SHALL BE CONNECTED BY THE BIDDER TO THE NEAREST PLANT DRAIN THROUGH OPEN FUNNEL USING 2" CS PIPE FROM FUNNEL TO PLANT DRAIN.

**2. FOR AIR/FLUE GAS LIEs FOR DRAINING THE IMPULSE LINE BETWEEN ITEM 17 DRAIN POT TO BE PROVIDED ALONGWITH DRAIN HEADER, 3/4" SW HALF COUPLET, ITEM 19,20,22,23 & FUNNEL ALONGWITH 1/2" PIPING TO PLANT DRAIN HEADER SHALL BE PROVIDED FOR STM/WATER. ALL ITEMS EXCEPT DRAIN POT TO BE PROVIDED.

3. GI PIPES SHALL BE PROVIDED FOR PURGE AIR CONNECTION OUTSIDE LIE/LIR.

FOR TENDER PURPOSE ONLY

REV.NO.	DESCRIPTION	DRAWN	DESIGN	CHKD.	M	E	C	C&I	ARCH.	APPD	DATE
A	FIRST ISSUE							T.C.		P.S.C	02.05.14
					CLEARED BY						

TITLE: INSTRUMENT INSTALLATION DIAGRAM
TYPICAL PURGE AIR CONNECTION & BLOWDOWN HEADER CONNECTION INSIDE INSTRUMENT RACK

SIZE	SCALE	DRG. NO.	REV. NO.
A3	N.T.S.	0000-999-POI-A-034	B

This document is the property of NATIONAL THERMAL POWER CORPORATION LTD.
No part of this document will be reproduced by any means without the written permission.

PRESS. MEASUREMENT

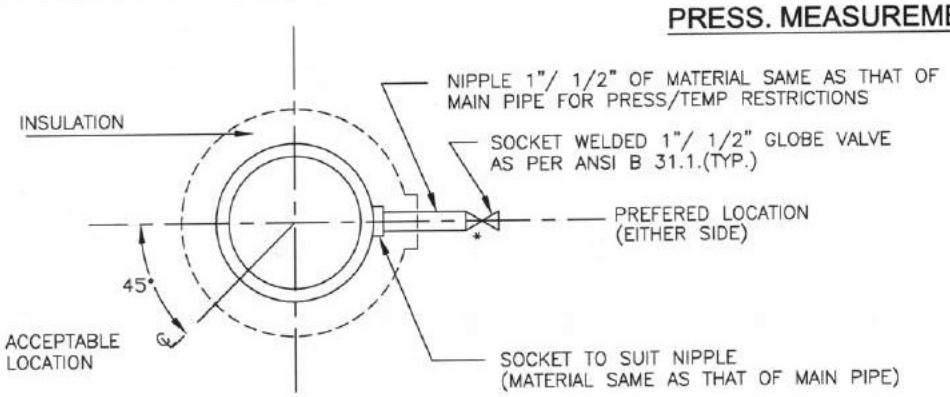

ELEVATION
LIQUID SERVICE

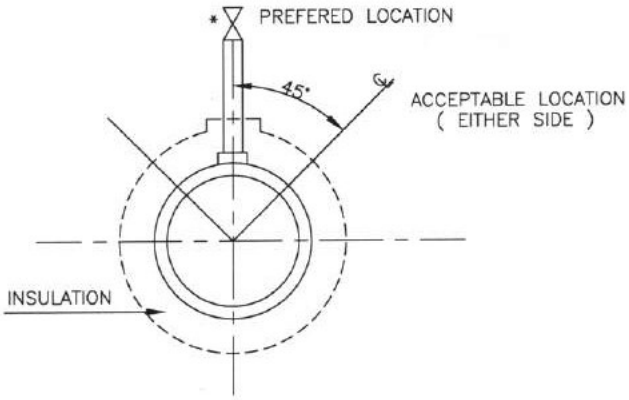

ELEVATION
STEAM SERVICE

PRESSURE CONNECTION ON HORIZO

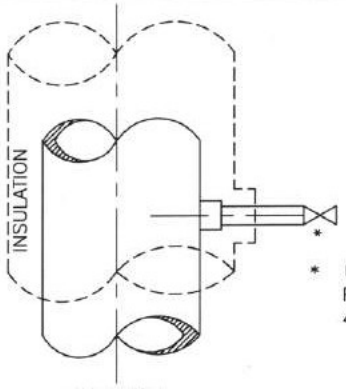

SOLATION VALVES FOR
UAL TO OR EXCEEDING

ELEVATION
LIQUID OR STEAM SERVICE

PRESSURE CONNECTIONS ON VERTICAL PIPES

FOR TENDER PURPOSE ONLY

REV. NO.	DESCRIPTION	DRAWN	DESIGN	CHKD.	M	E	C	C&I	ARCH.	APPD.	DATE
A	FIRST ISSUE							T.G.			21.06.18

CLEARED BY

TITLE: INSTRUMENT SOURCE CONNECTION DETAILS

SIZE	SCALE	DRG. NO.	REV. NO.
A4	N.T.S.	0000-999-POI-A-035 Sh-1 Of 14	A

This document is the property of NATIONAL THERMAL POWER CORPORATION LTD.
No part of this document will be reproduced by any means without the written permission.

PRESSURE MEASUREMENT

(SYSTEM PR.>40Kg/Sq Cm CL 6000)

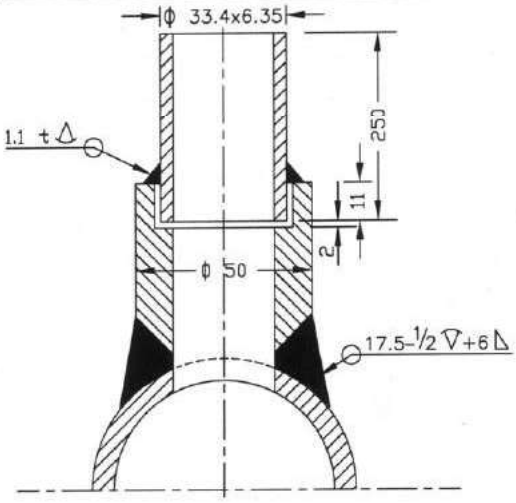

(SYSTEM PR. <40Kg/Sq cm Nb 15 CL 3000)

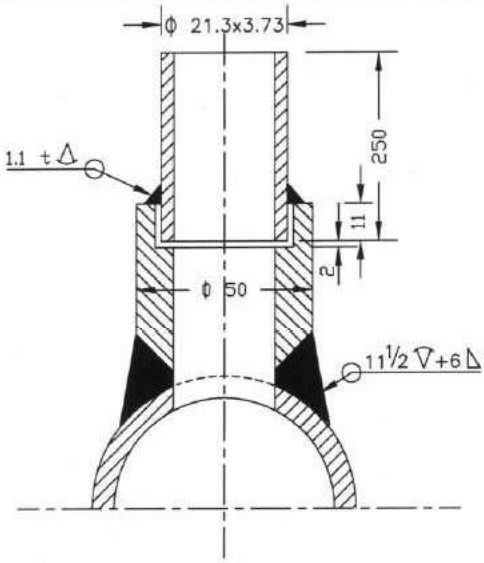

NOTES:–

1. MATERIAL OF THE BOSS AND NIPPLE SHALL BE THE SAME AS THE PIPE INTO WHICH IT IS WELDED AND CONFIRM TO ANSI B 16.11.
2. THE LENGTH OF THE NIPPLE SHOULD BE 250mm.
3. THE OTHER END OF THE NIPPLE SHALL BE SOCKET WELDED WITH 1" GLOBE VALVE OF MATERIAL AS PER ANSI B 16.1.
4. TWO ISOLATED VALVES ARE TO BE USED FOR PRESSURE = >40 Kg/Cm2.
5. EDGE HOLE MUST BE CLEAN AND SQUARE OR ROUNDED SLIGHTLY (1/64" RADIUS) FREE FROM BURRS, WIRE EDGES OR OTHER IRREGULARITIES.
6. ORIENTATION OF TAP WILL BE VARY WITH TYPE OF PROCESS FLUID AND NATURE OF RUN OF THE PIPE.
7. ACTIVITIES TO BE COMPLETED AT THE SHOP, WELD THE COUPLING (OR BOSS) ON THE PIPE AND DRILL PRESSURE CONNECTION HOLE (SAME AS I D OF NIPPLE) IN THE PIPE IN ALLIGNMENT WITH HOLE IN THE COUPLING.
8. ALL DIMENSIONS ARE IN mm UNLESS OTHERWISE STATED.

FOR TENDER PURPOSE ONLY

REV. NO.	DESCRIPTION	DRAWN	DESIGN	CHKD.	M	E	C	C&I	ARCH.	APPD.	DATE
A	FIRST ISSUE							T.G.			21.06.12

CLEARED BY

TITLE: INSTRUMENT SOURCE CONNECTION DETAILS

SIZE	SCALE	DRG. NO.	REV. NO.
A4	N.T.S.	0000-999-POI-A-035 Sh-2 Of 14	A

TEMP. MEASUREMENT

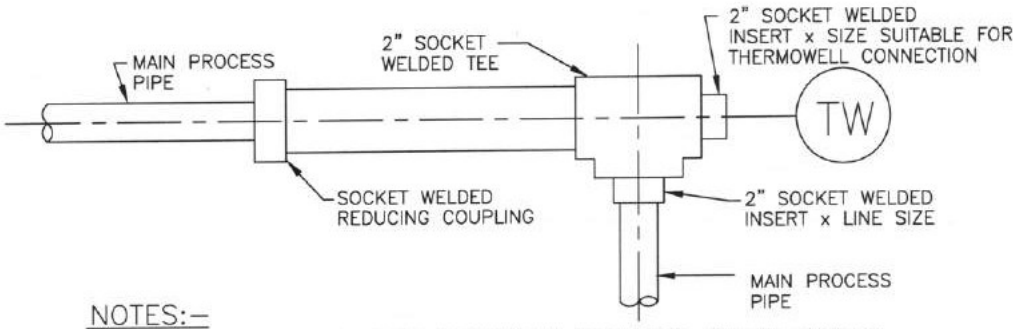

NOTES:–

1. THIS TYPE OF THERMOWELL INSTALLATION IS SUITABLE FOR THE PROCESS PIPE OF 2" NPS AND SMALLER.
2. FOR STEAM SERVICE THIS TYPE OF THERMOWELL INSTALLATION 90° BEND MAY BE USED ONLY IN VERTICAL PLANE.
3. THE LENGTH OF THE LARGER PIPE SECTION SHALL BE MINIMUM 150mm (IT MUST BE GREATER THAN THERMOWELL LENGTH).

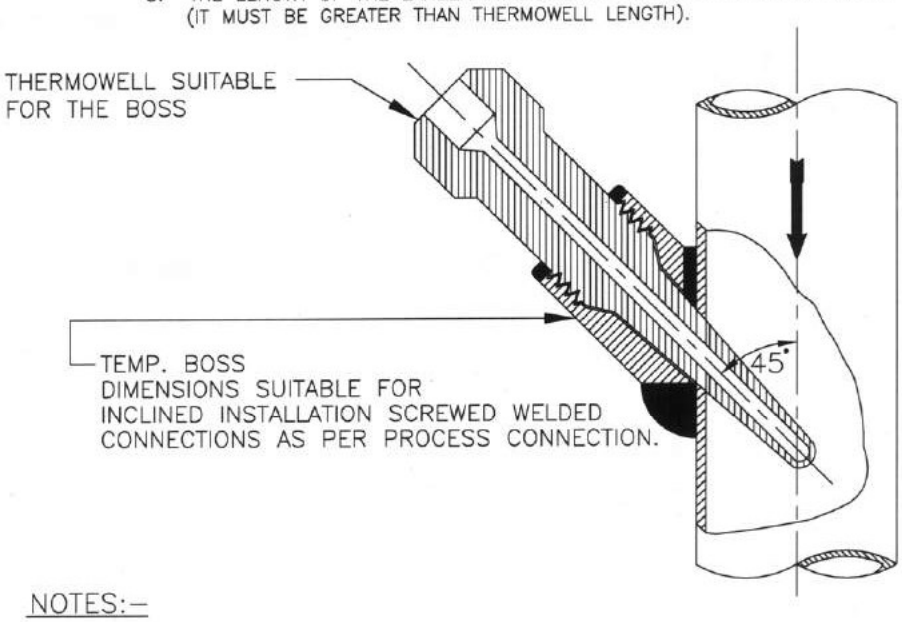

NOTES:–

1. INCLINED INSTALLATION OF THERMOWELL SHALL BE APPLICABLE FOR 4" AND SMALLER LINE SIZE BUT LIMITED TO MIN. 3" LINE SIZE.
2. FOR 2" AND SMALLER LINE SIZE NECESSARY EXPANDER OF MIN. 3" SIZE OF MAIN PIPING SPECIFICATION SHALL BE USED.
3. THIS TYPE OF INSTALLATION IS APPLICABLE FOR HORIZONTAL AND VERTICAL PIPE SECTION.
4. FOR STEAM SERVICES EXPANDER SECTION MAY BE USED ONLY IN VERTICAL RUN.
5. THE EXPANDER SECTION SHALL BE OF ADEQUATE LENGTH (ATLEAST 3–4 TIMES DIA OF THE MAIN PROCESS PIPE AT BOTH SIDE OF THE INSTALLED THERMOWELL).

FOR TENDER PURPOSE ONLY

REV. NO.	DESCRIPTION	DRAWN	DESIGN	CHKD.	M	E	C	C&I	ARCH.	APPD.	DATE
A	FIRST ISSUE							T.G.			21.06.13

CLEARED BY

TITLE	SIZE	SCALE	DRG. NO.	REV. NO.
INSTRUMENT SOURCE CONNECTION DETAILS	A4	N.T.S.	0000-999/102-POI-A-035 Sh–4 Of 14	A

This document is the property of NATIONAL THERMAL POWER CORPORATION LTD.
No part of this document will be reproduced by any means without the written permission.

This document is the property of NATIONAL THERMAL POWER CORPORATION LTD.
No part of this document will be reproduced by any means without the written permission.

TEMP. MEASUREMENT

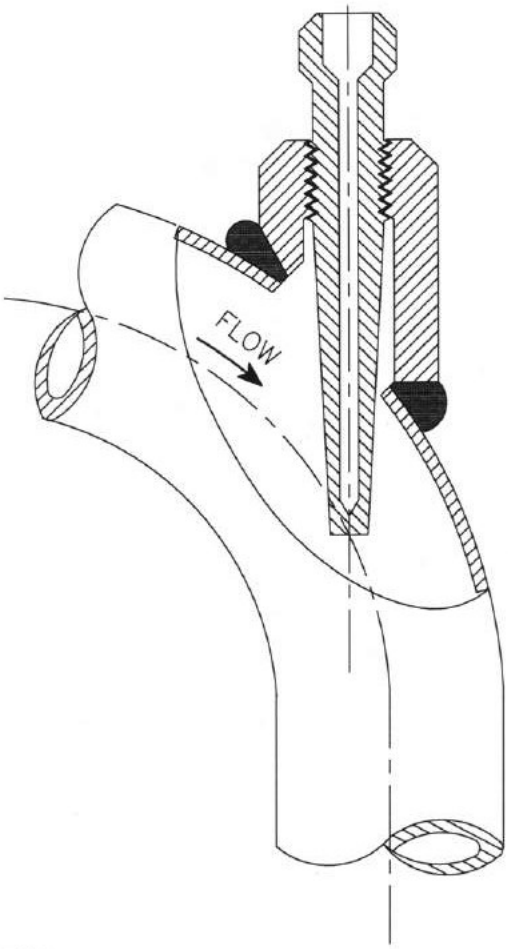

NOTES:–

1. FLOW INSTALLATION OF THERMOWELL SHALL BE APPLICABLE FOR 4" AND SMALLER LINE SIZE BUT LIMITED TO MINIMUM 3" LINE SIZE.

2. FOR 2" AND SMALLER LINE SIZE NECESSARY EXPANDER OF ELBOW FORM (AS SHOWN) OF MINIMUM 3" SIZE SHALL BE USED.

3. ELBOW EXPANDER SECTION IN HORIZONTAL PLANE MAY BE USED FOR LIQUID SERVICES. ONLY STEAM SERVICES EXPANDER SECTION MAY BE USED IN VERTICAL PLAN.

FOR TENDER PURPOSE ONLY

REV. NO.	DESCRIPTION	DRAWN	DESIGN	CHKD.	M	E	C	C&I	ARCH.	APPD.	DATE
A	FIRST ISSUE							T.G.			01.08.13

CLEARED BY

TITLE: INSTRUMENT SOURCE CONNECTION DETAILS

SIZE	SCALE	DRG. NO.	REV. NO.
A4	N.T.S.	0000-999-POI-A-035 Sh-5 Of 14	A

TEMP. MEASUREMENT

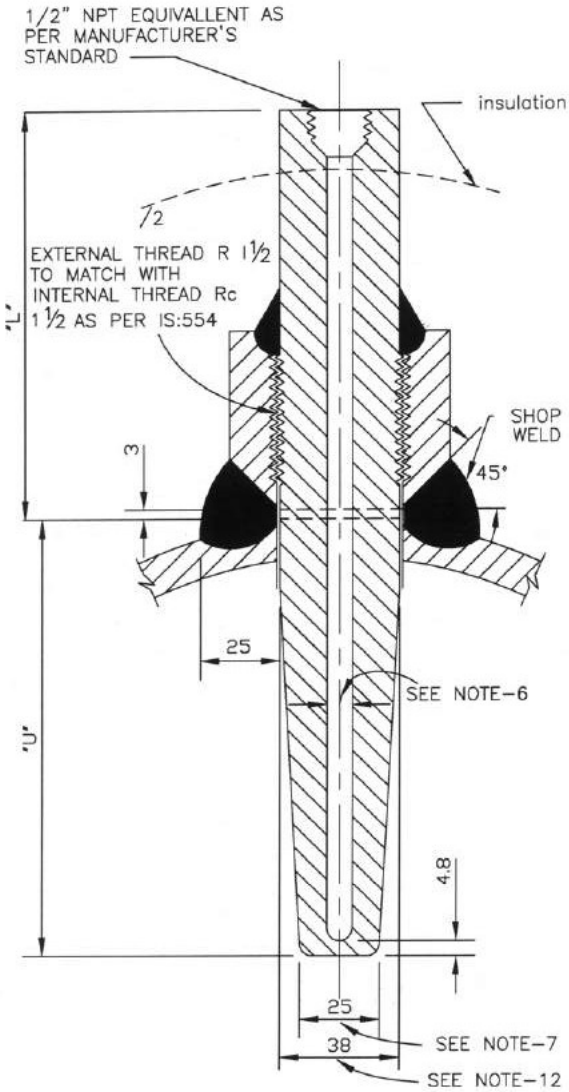

NOTES:-

1. THIS TYPE OF TEMPERATURE BOSS SHALL BE USED FOR THE PROCESS PRESS EQUAL/ABOVE 40 Kg/Cm2(g).
2. THE MATERIAL OF THE BOSS SHOULD BE SIMILAR TO THAT OF PIPING MATERIAL OF SPECIFICATION.
3. ALL WELD TO BE TESTED IN ACCORDANCE WITH APPLICABLE CODES BY MANUFACTURER.
4. MATERIAL OF THE THERMOWELL SHALL BE OF 316SS.
5. THERMOWELL SHALL BE DRILLED BARSTOCK TYPE.
6. INTERNAL BORE OF THE THERMOWELL SHOULD BE SELECTED BASED ON THE NORMAL SIZE OF THE SENSING ELEMENT AS PER ASME,PTC-19.3.
7. THE BOTTOM DIAMETER OF THE THERMOWELL TYPICALLY SHOWN HERE SHALL BE SUBJECT TO VARIATION BASED ON THE INTERNAL BORE OF THERMOWELL AND THICKNESS OF THERMOWELL MATERIAL TO WITHSTAND THE PROCESS PRESS.AND TEMP.,AS PER ASME,PTC-19.3.
8. THE TYPE OF TAPERED THERMOWELL SHALL BE USED FOR LIQUID VELO-CITIES UP TO 92M.P.S.(300F.T.P.S.).
9. THERMOWELL WITH THE INSULATION LAG EXTENSIONS SHALL BE USED WHEREVER APPLICABLE.
10. ACTIVITIES TO BE COMPLETED AT THE SHOP. WELD THE BOSS ON THE PIPE AND DRILL THE HOLE IN THE PIPE IN ALLIGNMENT WITH HOLE IN THE BOSS. PROVIDE INTERNAL THREAD AS PER IS:554 TO MATCH WITH THE THERMO-WELL EXTERNAL THREAD.
11. ALL DIMENSIONS ARE IN MM UNLESS OTHERWISE STATED.
12. WIILL BE SUITABLE TO MATCH THE STUB DIMENSIONS AS PER RC 1½
13. THE "U" & "L" DIMENSIONS SHALL BE BE SELECTED BASED ON PARTICULAR APPLICATION AND THE SAME SHALL BE SUBJECT TO OWNER'S APPROVAL DURING DETAILED ENGINEERING.
14. ALL DIMENSIONS ARE INDICATIVE ONLY.

FOR TENDER PURPOSE ONLY

REV. NO.	DESCRIPTION	DRAWN	DESIGN	CHKD.	M	E	C	C&I	ARCH.	APPD.	DATE
A	FIRST ISSUE							T.G.			21.06.12

CLEARED BY

TITLE: INSTRUMENT SOURCE CONNECTION DETAILS

SIZE	SCALE	DRG. NO.	REV. NO.
A4	N.T.S.	0000-999-POI-A-035 Sh-6 Of 14	A

This document is the property of NATIONAL THERMAL POWER CORPORATION LTD.
No part of this document will be reproduced by any means without the written permission.

TEMP. MEASUREMENT

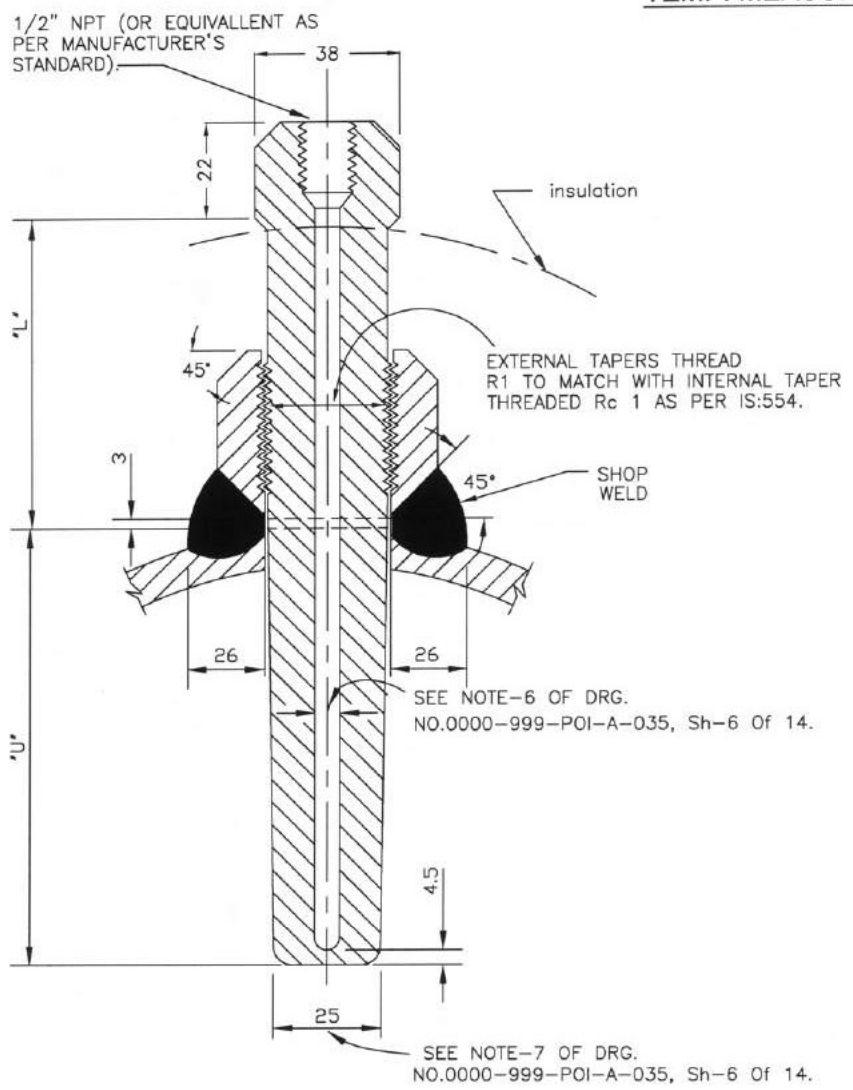

NOTES:-

1. THIS TYPE OF TEMPERATURE BOSS IS APPLICABLE FOR THE PROCESS PRESSURE/TEMPERATURE BELOW 40 Kg/Cm2(g)/400°C
2. FOR PRESSURE TIGHT JOINTS THE BOSS SHOULD HAVE INTERNAL TAPERED PIPE THREAD Rc 1 AS PER IS:554. THE LENGTH OF THREAD ENGAGEMENT SHOULD BE AS PER ABOVE STANDARD.
3. PIPES HAVING PROBABILITY OF PROLONGED VIBRATION SEAL WELDING MAY BE DONE ALL AROUND AFTER TIGHTENING THERMOWELL WITHIN THE BOSS.
4. SEE NOTES-2 TO 14 OF DRG. NO. 0000-999-POI-A-035, Sh-6 Of 14.

FOR TENDER PURPOSE ONLY

REV. NO.	DESCRIPTION	DRAWN	DESIGN	CHKD.	M	E	C	C&I	ARCH.	APPD.	DATE
A	FIRST ISSUE							T.G.			21.06.13
					CLEARED BY						

TITLE	SIZE	SCALE	DRG. NO.	REV. NO.
INSTRUMENT SOURCE CONNECTION DETAILS	A4	N.T.S.	0000-999-POI-A-035 Sh-7 Of 14	A

This document is the property of NATIONAL THERMAL POWER CORPORATION LTD.
No part of this document will be reproduced by any means without the written permission.

FLOW MEASUREMENT

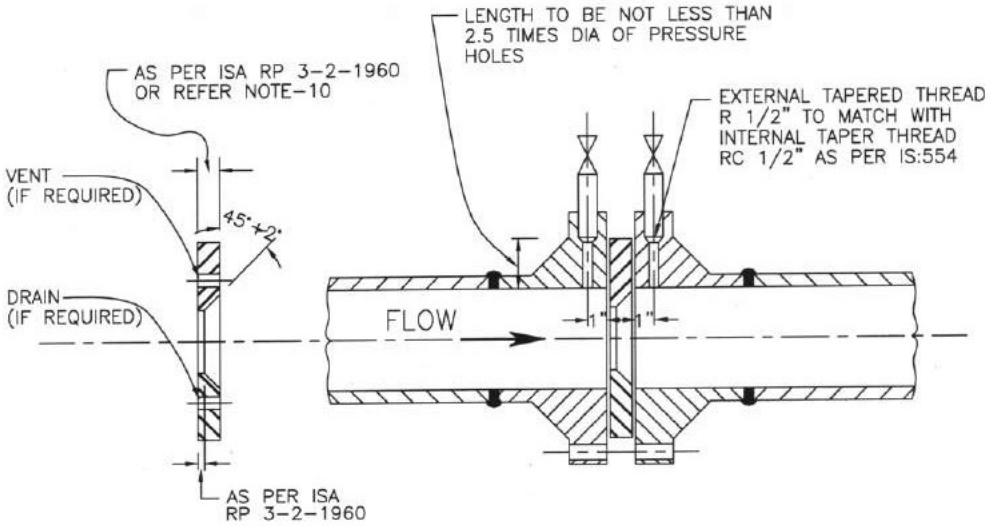

NOTES:-

1. ORIFICE PLATE MOUNTED BETWEEN FLANGES WITH FLANGE TAPPING (AS SHOWN ABOVE) SHOULD BE LIMITED TO PIPE SIZES OF 2" OR LARGER.
2. ORIFICE PLATE SHALL BE MOUNTED BETWEEN PIPING FLANGES WITH THE SHARP EDGE FACING UPSTREAM SUCH THAT CENTRE OF THE CONCENTRIC ORIFICE SHOULD BE WITHIN 0.79 mm (1/32") OF THE AXIS OF THE PIPE.
3. TWO GASKETS SHALL BE INSERTED BETWEEN THE PLATE AND THE FLANGES AND INSIDE DIAMETER OF THE GASKETS SHOULD BE ATLEAST 1.5 mm (1/16") GREATER THAN THE INSIDE DIAMETER OF THE PIPE SO THAT THEY DO NOT PROTRUDE INTO THE PIPE.
4. PIPING FLANGES SHALL BE ANSI WELD NECK, RAISED FACE TYPE. THE FLANGE IS TO BE ALIGNED WITH THE FACE PERPENDICULAR TO THE FLOW AXIS.
5. BIDDER TO SUPPLY ORIFICE PLATE SPECIAL TYPE (HAVING PRESS. CONNECTIONS) OF FLANGES ALONG WITH GASKETS, NIPPLES AND SOURCE VALVES.
6. ON HORIZONTAL PIPE RUN PRESSURE CONNECTIONS ARE TO BE TAKEN FROM SIDES FOR LIQUID AND STEAM SERVICE AND FROM TOP FOR DRY GAS SERVICE. FOR PROCESS LIQUIDS INSTALLATION OF PRESSURE TAPS MAY BE ALLOWED WITHIN AN ANGLE OF 45° ELBOW THE HORIZONTAL IN SPECIAL CASES BUT NO BOTTOM CONNECTIONS ARE ALLOWED.
7. THE LOCATION OF PRESSURE TAPS MUST BE WITHIN 1.5 mm (1/16") OF THE DISTANCE SPECIFIED.
8. MAXIMUM DIAMETER OF PRESS. CONNECTION HOLES SHALL BE AS PER RECOMMENDATIONS OF ASME PTC 19.5. THE DIAMETER OF THE HOLE SHOULD REMAIN THE SAME FOR A DISTANCE NOT LESS THAN 2.5 TIMES OF THE DIAMETER BEFORE EXPANDING INTO THE PRESSURE PIPE.
9. THERE MUST BE NO BURRS WIRE EDGES OR OTHER IRREGULARTIES ALONG THE EDGE OF THE HOLE AND IT MUST BE SQUARE AND ROUNDED SLIGHTLY (1/64" RADIUS).
10. ORIFICE PLATE SHOULD BE FLAT WITHIN 0.02 mm (0.001") AND THE SURFACE ROUGHNESS SHOULD NOT EXCEED 20 MICRO INCH. THE THICKNESS OF THE ORIFICE PLATE SHOULD BE AS PER EN ISO 5167:2003.
11. FOR HORIZONTAL PIPE RUN DRAIN HOLES IN ORIFICE PLATES ARE AT THE BOTTOM (APPROX. TANGENT TO INSIDE DIA OF PIPE) FOR STEAM OR GAS SERVICE. VENT HOLES SHOULD BE LOCATED ON UPPER SIDE FOR INCOMPRESSIBLE FLUID.
12. ORIFICE PLATE SHOULD BE OF 316 SS (ASTM A167-54 GRADE-II).
13. RECOMMENDED MINIMUM LENGTHS OF STRAIGHT PIPE PRECEDING AND FOLLOWING ORIFICES SHALL BE AS PER EN ISO 5167:2003.
14. THREE PAIRS OF PRESSURE TAPS SHALL BE PROVIDED WITH NIPPLES OF REQUIRED LENGTH AND SOURCE VALVES AND THE UN-USED TAPS ARE PLUGGED.
15. THE INTERNAL TAPERED CONNECTION WITHIN THE FLANGE FOR PRESSURE TAPS SHOULD BE RC 1/2" AND THE NIPPLE SHOULD ALSO OF EXTERNAL THREADED R 1/2" AS PER IS:554. THE LENGTH OF THREADED ENGAGEMENT SHALL BE AS PER ABOVE STANDARD.

FOR TENDER PURPOSE ONLY

REV. NO.	DESCRIPTION	DRAWN	DESIGN	CHKD.	M	E	C	C&I	ARCH.	APPD.	DATE
A	FIRST ISSUE							T.G.			21.08.13

CLEARED BY

TITLE: INSTRUMENT SOURCE CONNECTION DETAILS

SIZE	SCALE	DRG. NO.	REV. NO.
A4	N.T.S.	0000-999-POI-A-035 Sh-12 Of 14	A

This document is the property of NATIONAL THERMAL POWER CORPORATION LTD.
No part of this document will be reproduced by any means without the written permission.

LEVEL MEASUREMENT

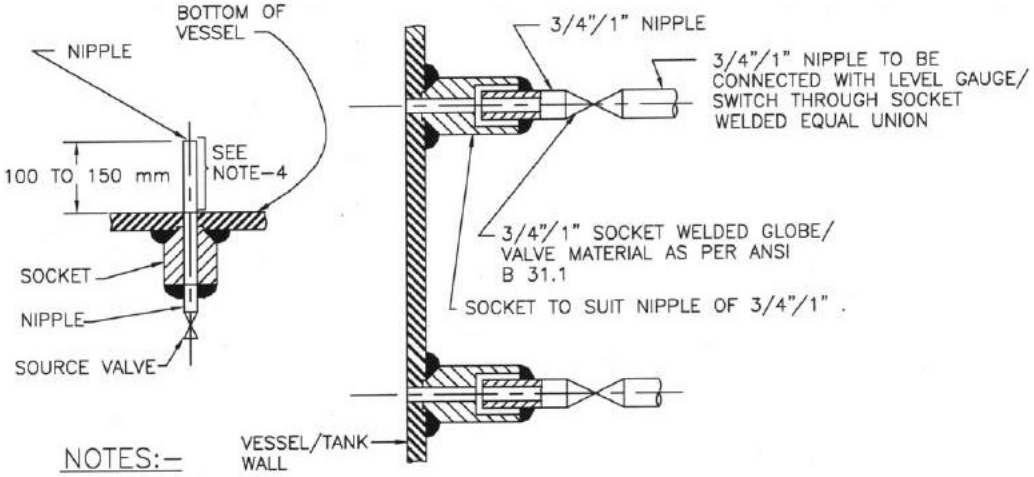

NOTES:-

1. THIS TYPE OF PROCESS CONNECTION SHALL BE USED FOR LEVEL GAUGE AND EXTERNAL CAGE TYPE FLOAT OR DISPLACER OPERATED LEVEL SWITCH.
2. FOR GAUGES 3/4" NIPPLE ALONG WITH 3/4" SW SOURCE VALVE AND FOR SWITCHES 1" NIPPLE ALONG WITH 1" SW SOURCE VALVE SHALL BE PROVIDED AS PROCESS CONNECTION.
3. SOURCE CONNECTION ON VESSEL SHOULD NOT BE LOCATED AT PLACES SUBJECTED TO INTERFACE AND TURBULENCE FROM INLETS AND OUTLETS.
4. IF LOWER CONNECTION IS TAKEN FROM BOTTOM OF THE VESSEL THEN THE NIPPLE MUST BE 100 mm TO 150 mm ABOVE THE BOTTOM OF THE VESSEL.

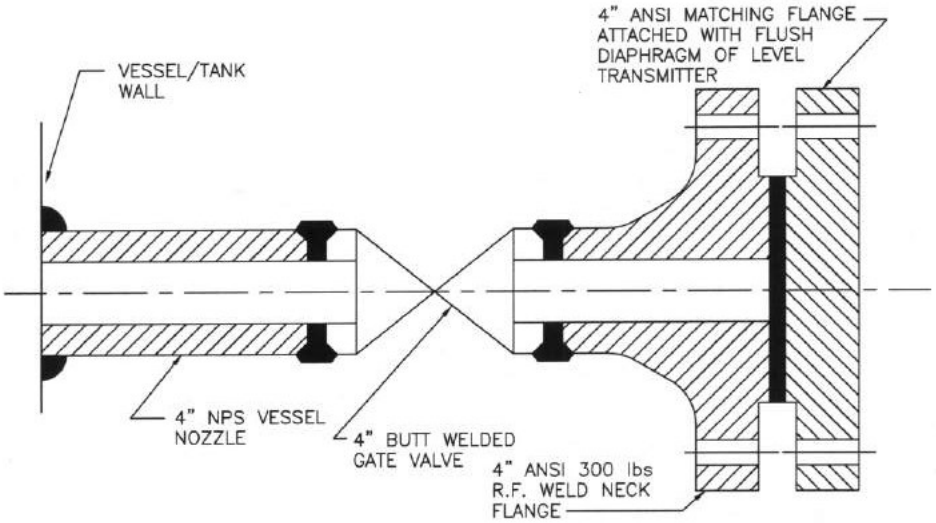

NOTES:-

1. THIS TYPE OF PROCESS CONNECTION SHALL BE PROVIDED FOR TANK LEVEL MEASUREMENT OF VISCOUS OR CORROSIVE LIQUID USING FLUSH DIAPHRAGM/WAFER TYPE LEVEL TRANSMITTER.
2. WELDING OF MATCHING FLANGE TO GATE VALVE SHALL BE DONE BY BIDDER.

FOR TENDER PURPOSE ONLY

REV. NO.	DESCRIPTION	DRAWN	DESIGN	CHKD.	M	E	C	C&I	ARCH.	APPD.	DATE
A	FIRST ISSUE							T.G.			01.06.13

CLEARED BY

TITLE: INSTRUMENT SOURCE CONNECTION DETAILS

SIZE	SCALE	DRG. NO.	REV. NO.
A4	N.T.S.	0000-999-POI-A-035 Sh-13 of 14	A

This document is the property of NATIONAL THERMAL POWER CORPORATION LTD.
No part of this document will be reproduced by any means without the written permission.

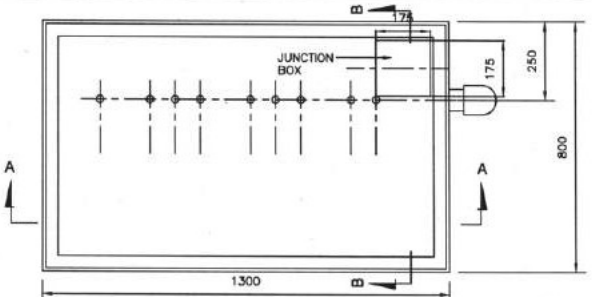

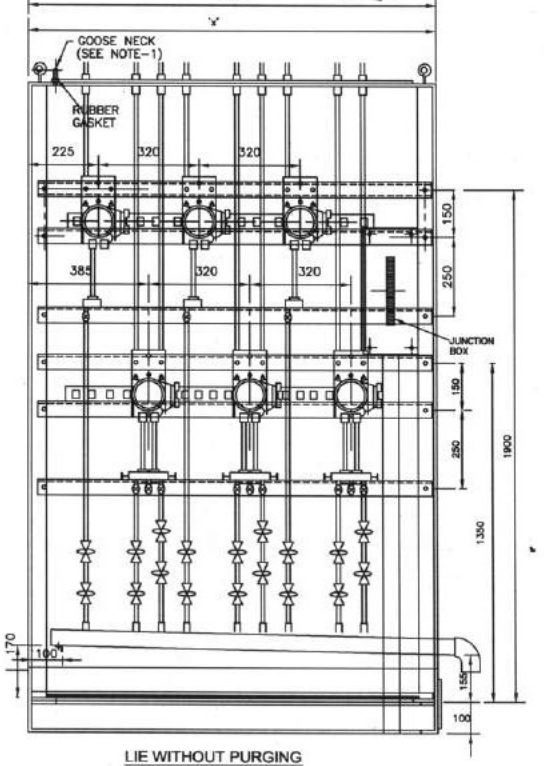

LIE WITHOUT PURGING

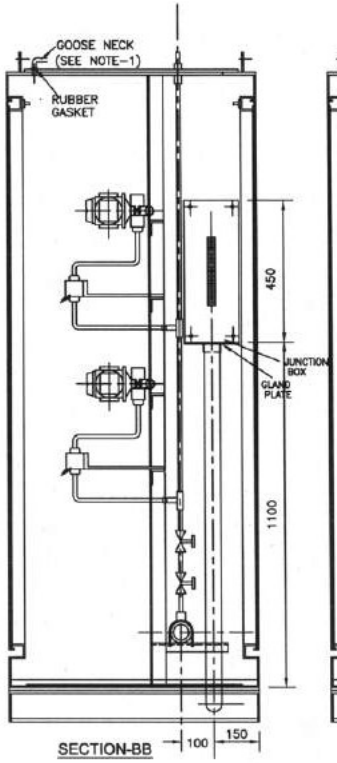

SECTION-BB

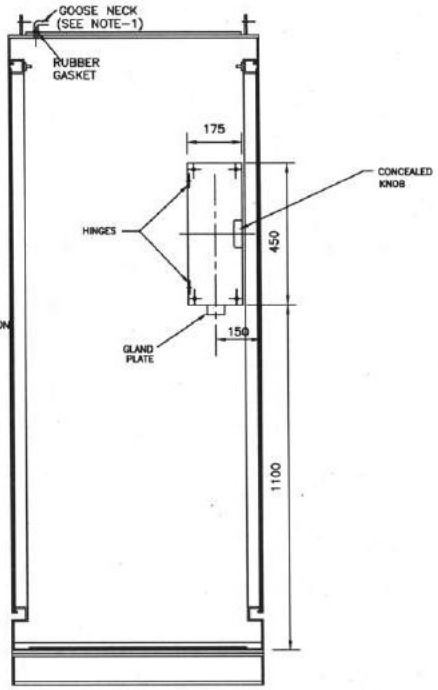

SIDE ELEVATION

LIE TYPE	MAX. NO. OF TRANSMITTERS	DIMENSION 'X' (mm)
A	6	1250
B	4	930
C	2	630

NOTES:-

1. TO BE PROVIDED FOR LIEs USED IN STEAM & WATER APPLICATION.
2. MATERIAL OF JBs FOR LIEs SHALL BE SAME AS THAT OF LIE.

FOR TENDER PURPOSE ONLY

REV.NO.	DESCRIPTION	DRAWN	DESIGN	CHKD.	M	E	C	C&I	ARCH.	APPD	DATE
A	FIRST ISSUE							T.G.			21.06.12

CLEARED BY

TITLE: TYPICAL GA OF LOCAL INSTRUMENT ENCLOSURE / RACK

SIZE	SCALE	DRG. NO.	REV. NO.
A2	N.T.S.	0000-999-POI-A-064 SHEET 01 OF 03	B

This document is the property of NATIONAL THERMAL POWER CORPORATION LTD.
No part of this document will be reproduced by any means without the written permission.

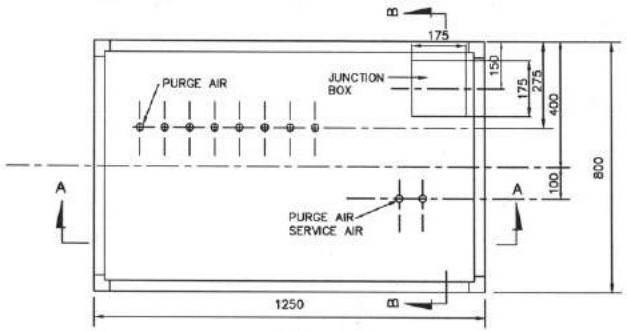

LIE TYPE	MAX. NO. OF TRANSMITTERS	DIMENSION 'X' (mm)
A	6	1300
B	4	980
C	2	680

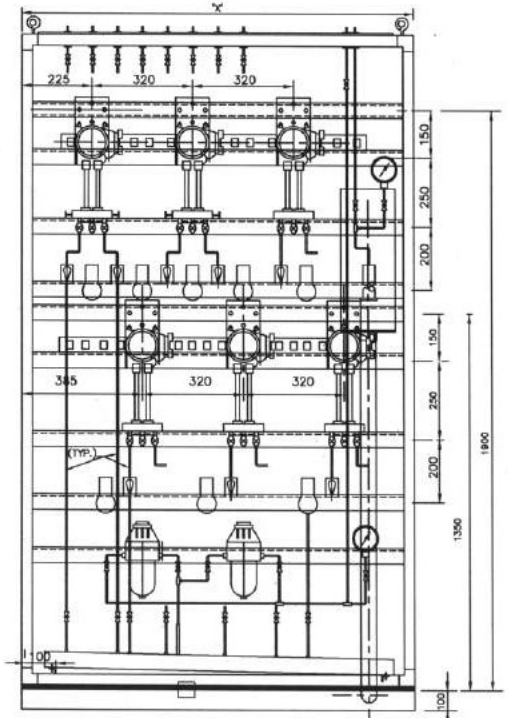

LIE WITH PURGING

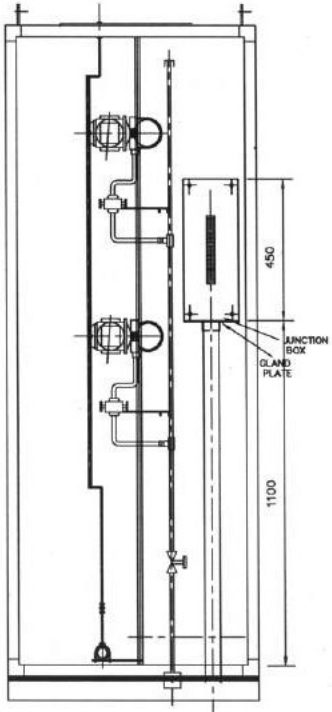

SECTION-BB

NOTES:-

1. MATERIAL OF JBs FOR LIEs SHALL BE SAME AS THAT OF LIE.

FOR TENDER PURPOSE ONLY

This document is the property of NATIONAL THERMAL POWER CORPORATION LTD.
No part of this document will be reproduced by any means without the written permission.

REV.NO.	DESCRIPTION	DRAWN	DESIGN	CHKD.	M	E	C	C&I	ARCH.	APPD	DATE
A	FIRST ISSUE							T.G.			19.04.12

CLEARED BY

TITLE: TYPICAL GA OF LOCAL INSTRUMENT ENCLOSURE / RACK

SIZE	SCALE	DRG. NO.	REV. NO.
A2	N.T.S.	0000-999-POI-A-064 SH- 02 OF 03	B

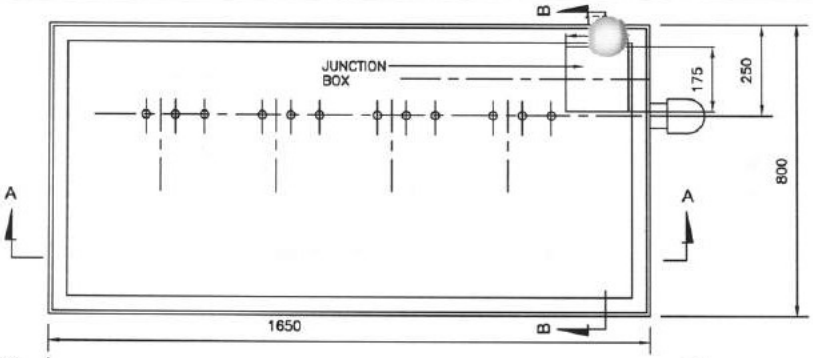

LIR TYPE	MAX. NO. OF TRANSMITTERS	DIMENSION 'X' (mm)
A	8	1650
B	6	1330
C	4	1010

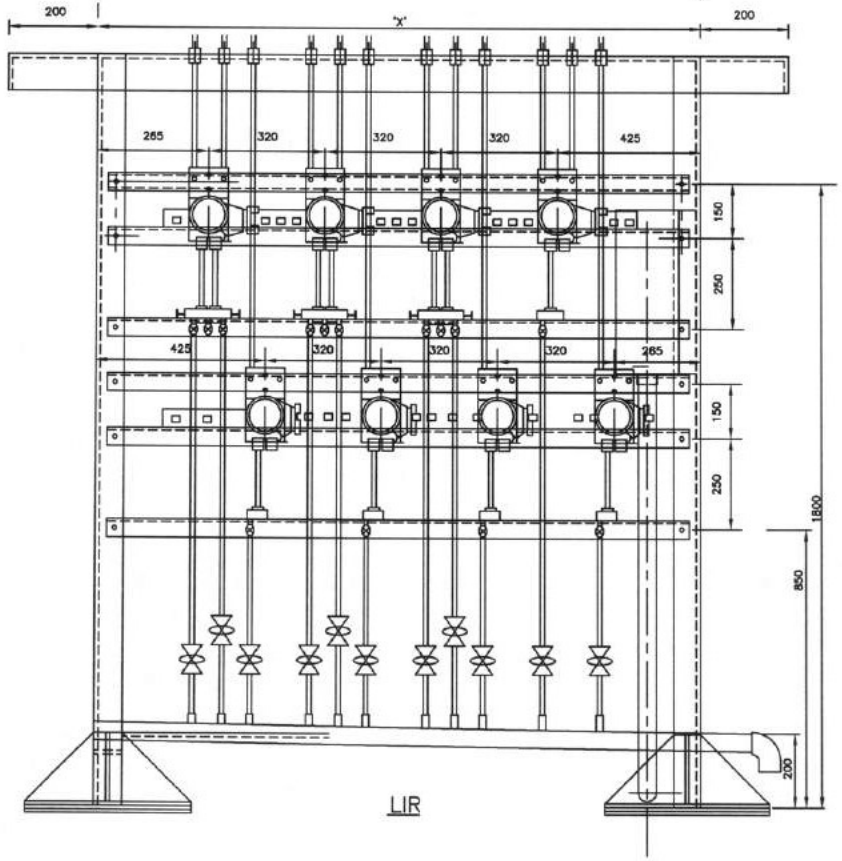

LIR

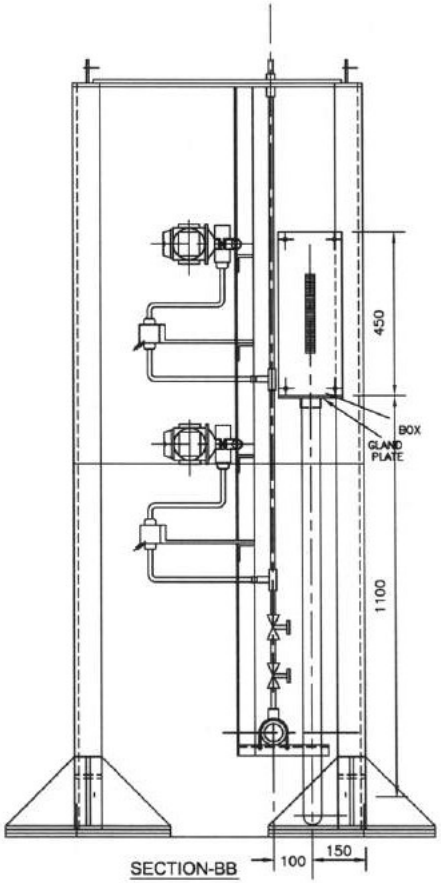

SECTION-BB

NOTE:-

1. MATERIAL OF JBs FOR LIRs SHALL BE SAME AS THAT OF LIR.

FOR TENDER PURPOSE ONLY

SECTION-AA
LIR WITHOUT PURGING

REV.NO.	DESCRIPTION	DRAWN	DESIGN	CHKD.	M	E	C	C&I	ARCH.	APPD	DATE
A	FIRST ISSUE							T.G.			21.08.12

CLEARED BY

TITLE: TYPICAL GA OF LOCAL INSTRUMENT ENCLOSURE / RACK

SIZE	SCALE	DRG. NO.	REV. NO.
A3	N.T.S.	0000-999-POI-A-064 SH- 03 OF 03	A

This document is the property of NATIONAL THERMAL POWER CORPORATION LTD.
No part of this document will be reproduced by any means without the written permission.

	TECHNICAL SPECIFICATION INDUCED DRAFT COOLING TOWER 2000 TPD BCGCL COAL TO AMMONIUM NITRATE - LSTK-1	PE-TS-544-165-W001 Rev. No. 00 07.05.2026

TECHNICAL DATA - PART - B (MECHANICAL)
(SUPPLIER DATA TO BE FURNISHED AFTER AWARD OF CONTRACT)

SL.NO	DESCRIPTION	UOM	DETAIL
1.0	Type Model No. (Single air inlet, Double air inlet)		
2.0	Quantity	Nos/ Unit	
3.0	Rated Capacity	M^3/Hr	
4.0	No. of Cells	Nos./ CT	
4.1	Working		
4.2	Standby		
5.0	Ambient Design Wet Bulb Temperature	°C	
6.0	Recirculation Allowance	°C	
7.0	Design Inlet Wet Bulb Temp (including recirculation allowance)	°C	
8.0	Cold Water Temperature	°C	
9.0	Cooling Tower Approach	°C	
10.0	Cooling Tower Range	°C	
11.0	Cooling Tower Loss		
11.1	Evaporation Loss		
11.2	Drift Loss		
11.3	Blow Down Loss (Concentration Factor to be indicated)		
12.0	Basin Storage capacity	M3/hr	
13.0	Cell size (Length x Width x Height)	M x M x M	
14.0	Overall Size of Cooling Tower (Length x Width x Height)	M x M x M	
15.0	Required Pumping Head including all losses measured	M	
16.0	Dia of fan stack	M	
17.0	Cooling Tower Levels		
17.1	Graded Level	M	
17.2	Maximum Water Level	M	
17.3	Basin Curb Level	M	
17.4	Minimum Water Level	M	
17.5	Basin Bottom Level	M	
18.0	Overall Tower Height from Basin Floor	M	
19.0	Basin Dimensions		
19.1	Length	M	
19.2	Width	M	
19.3	Depth (from basin curb)	M	
20.0	Free Board (Above Max. Water Level)	mm	
21.0	Heat Transfer Data		
21.1	Heat Transfer Coefficient (K)		
21.2	Tower Coefficient © Ka V/L	M	
21.3	Average Fill Height	M	
21.4	Total Fill Volume	Cub M	

21.5	Total Water wetted surface	Sq M	
21.6	Total Tower Wetted Surface	Sq M	
22.0	Hot Water Distribution Piping		
22.1	Size (OD X Thk)	mm x mm	
22.2	Elevation of Center Line of Hot Water distribution Header	M	
22.3	Design pressure for Hot Water Distribution System	Kg/cm2(g)	
23.0	Isolation Valves in Hot Water Risers		
23.1	Size	mm	
23.2	Quantity	Nos./ cell	
23.3	Type/Code & Standard		
23.4	Make		
23.5	Pressure drop across the valve in fully open position	MWC	
23.6	Materials of Construction		
23.6.1	Body		
23.6.2	Disc		
23.6.3	Drive Shaft/Stub Shaft		
23.6.4	Bearings		
23.7	Test Pressure / duration	Kg/cm2(g) / Min	
24.0	Flow Control Valves (If Applicable)		
24.1	Make		
24.2	Size	mm	
24.3	No. of Cell	Nos	
24.4	Materials of Construction		
24.4.1	Body		
24.4.2	Spindle		
24.4.3	Trim		
25.0	**Isolating Valve in Sludge Pit**		
25.1	Size	mm	
25.2	Quantity	Nos / CT	
25.3	Type		
25.4	Make		
25.5	Conform to which code in respect of design/testing		
25.6	Materials of Construction		
25.6.1	Body		
25.6.2	Stem		
25.6.3	Trim		
26.0	**Stationary Screen**		
26.1	Quantity	Nos / CT	
26.2	Size & Material of Bar		
26.3	Clear Space between the bar		
26.4	Lifting Arrangement		

27.0	**Fill & Fill Supports**		
27.1	Type of fill		
27.2	Material		
27.3	Type of treatment (in case of timber fill)		
27.4	Expected Life	Years	
27.5	Arrangement of Fill/splash bars (horizontal etc.)		
27.6	Method to prevent dislocation of Fills		
27.7	Type/Material/Size of fixing arrangement to supporting grid		
27.8	Fill Support Grids		
27.8.1	Type		
27.8.2	Material (give full specification)		
27.8.3	Size		
27.8.4	Colour of Fill		
27.9	Grid Supporting Frames		
27.9.1	Type		
27.9.2	Material (give full specification)		
27.9.3	Size		
27.10	Fasteners		
27.10.1	Type		
27.10.2	Fill		
27.10.3	Fill Support Grids		
27.10.4	Frames for Supporting the Grids		
28.0	Drift Eliminators		
28.1	Number of Passes		
28.2	Gross Face Area per pass	Sq M	
28.3	Type		
28.4	Eliminator Blades		
28.4.1	Material		
28.4.2	Maximum Length of blade	mm	
28.4.3	Size and shape of blades		
28.4.4	Type and material of drain boards		
28.5	Blade Support Spacers		
28.5.1	Type		
28.5.2	Material		
29.0	**FANS**		
29.1	Manufacturer		
29.2	Type		
29.3	Model Number		
29.4	Number furnished	Nos./CT	
29.5	Diameter	M	
29.6	Number of Blades/fan		
29.7	Fan speed	RPM	

29.8	Tip speed	M/Sec	
29.9	Blade tip clearance	mm	
29.10	BHP per fan		
29.11	Air delivery per fan	Cubm/hr	
29.12	Fan static efficiency	%	
29.13	Blade material		
29.14	Hub material		
29.15	Fasteners & Hardware material		
29.16	Entire fan assembly statically balanced		
29.17	Total differential pressure drop (considering receovery)		
29.17.1	Drop through louvers	MWC	
29.17.2	Drop through fills	MWC	
29.17.3	Drop though eliminators	MWC	
29.17.4	Velocity pressure	MWC	
29.18	Drop through plenum	MWC	
29.19	Noise level of fan at rated pitch and speed	dB	
29.20	Total guaranteed power consumption at motor inlet (to be supported by calculations)	KW/Fan	
29.21	Fan motor rating	KW	
30.0	**GEAR REDUCER**		
30.1	Manufacturer		
30.2	Model Number		
30.3	Reduction Ratio		
30.4	Service factor at rated HP of drive		
30.5	Bearing and material		
30.6	Material of gear tooth and hardness.		
31.0	**DRIVE SHAFT**		
31.1	Manufacturer		
31.2	Number		
31.3	Rated HP		
31.4	Drive and shaft material		
31.5	Coupling material		
31.6	Number of couplings furnished per driving unit		
31.7	Type of couplings and whether coupling guard provided.		
31.8	Drive shaft statically dynamically balanced.		
32.0	**Gate in Cold Water Outlet Channel**		
32.1	Number per cold water outlet channel		
32.2	Gate Type		
32.3	Name of Manufacturer		
32.4	Gate Size		
32.5	Weight of each gate	Kg	
32.6	Are elements of gate dismantling type?		

32.7	Weight of each Element	Kg	
32.8	Frame Type		
32.9	Fixing arrangement of frame with RCC channel		
33.0	**Lifting Arrangement of Gate**		
33.1	Type of treatment for the wood (in case of wooden gates)		
33.2	Expected Life	Years	
34.0	**VERTICAL SLUDGE PUMP & MOTOR (Optional Item)**		
	Vertical sludge pumps complete with electric motors, valves, piping and fittings at their discharge offered.	Yes / No	
34.1	Make & Model No.		
34.2	Rated capacity	M3/Hr	
34.3	TDH	MWC	
34.4	Pump speed	RPM	
34.5	Pump efficiency	%	
34.6	Power consumption at rated flow	KW	
34.7	Motor HP provided	HP / KW	
34.8	Material of Construction		
34.8.1	Impeller		
34.8.2	Casing		
34.8.3	Pump & Line Shaft		
34.8.4	Bearings		
34.8.5	Impeller/Casing Wearing Rings		
35.0	Oil Level Indication in Gear Box provided	Yes/No	
35.1	Type & Model No.		
35.2	Manufacturer		
35.3	Contact rating		
36.0	Cooling Tower Materials of Construction		
36.1	Casing		
36.2	Louvers		
36.3	Cell Partition Walls		
36.4	Basin Partition Walls		
36.5	Stack		
36.6	Stair Case		
36.7	Hot Water piping		
36.8	Hot Water distribution basin		
36.9	Internal Walkways		
36.10	Supporting Structure		
36.11	Hand Rails		
36.12	Structure Connector		
36.13	Bolts, nuts, washers and other hardware		
36.14	Nails		

36.15	Anchor Bolts		
36.16	Hot Water Distribution Nozzle		
36.17	Hot Water distribution Plates		
36.18	Spacers		
36.19	Mechanical Equipment Support		
37.0	Weight of Equipments		
37.1	Weight of Heaviest part to be handled	Kg	
37.2	Size of largest part to be handled		
37.3	Weight of gear box	Kg	
37.4	Weight of fan drive motor	Kg	
38.0	Inspection & Testing		
38.1	Hydro Test Pressure for Hot water piping		
38.1.1	Test Pressure	Kg/cm2(g)	
38.1.2	Duration	Minutes	
38.2	Balancing test for the fan and the drive shafts shall be conducted.	Yes / No	
38.3	Field performance test for the tower shall be conducted.	Yes / No	
39.0	Flow per cell at design condition	M^3/Hr	
40.0	Maximum Water Handling capacity (per cell)	M^3/Hr	
41.0	Cooling Water Flow Rate (L)	Kg/m^2/Hr	
42.0	Dry Air Flow Rate (G)	Kg/m^2/Hr	
43.0	Ratio of Water to Air	(L/G)	
44.0	Dry Air Flow	Kg/Hr	
45.0	Temperature of air leaving the Stack	°C	
46.0	Inlet air Enthalpy	KCal/Kg	
47.0	Exit air Enthalpy	KCal/Kg	
48.0	Total Heat Exchange/Kg of Inlet Dry air	KCal/Kg	
49.0	Losses in hot water piping	MWC	
50.0	Type of air inlet	MWC	
51.0	Pressure recovery from fan stack	mm	
52.0	Air inlet are per cell	Max.	
53.0	Splash surface of fill per cell	M^2	
54.0	Whether fan blades are adjustable degree of pitch adjustment	°C	
55.0	Max. possible discharge through fan (indicate angle of pitch)	M^3/Hr	
56.0	Design value of discharge through fan (indicate angle pitch)	M^3/Hr	
57.0	Weight of complete fan assembly	kg	

	TECHNICAL SPECIFICATION DOUBLE GIRDER EOT CRANE LARA SUPER THERMAL POWER PROJECT STAGE-II (2X800 MW)	PE-TS-XXX-YYY-HZZZ Issue No: 01 Rev. No. 00 Date :

ANNEXURE-VI

TECHNICAL DATA - PART - B (SUPPLIER DATA TO BE FURNISHED AFTER AWARD OF CONTRACT)

SL.NO		UOM	DETAIL
1.0	**GENERAL**		
i)	Manufacturer & Country of origin.		
ii)	Equipment driven by motor)		
iii)	Motor type		
iv)	Country of origin		
v)	Quantity	nos.	
2.0	**DESIGN AND PERFORMANCE DATA**		
i)	Frame size		
ii)	Type of duty		
iii)	Type of enclosure and method of cooling		
vi)	Type of mounting		
vii)	Direction of rotation as viewed from DE END		
viii)	Standard continuous rating at 40 deg.C. ambient temp. as per Indian Standard	(KW)	
ix)	(A) Derated rating for specified normal condition i.e. 50 deg. C ambient temperature	(KW)	
	(B) Rating as specified in load list	(KW)	
xi)	Rated speed at rated voltage and frequency	rpm	
xii)	At rated Voltage and frequency		
	a) Full load current	A	
	b) No load current	A	
xiii)	Power Factor at		
	a) 100% load		
	b) At duty point		
	c) 75% load		
	d) 50% load		
	e) NO load		
	f) Starting.		
xiv)	Efficiency at rated voltage and frequrecy		
	a) 100% load		
	b) At duty point		
	c) 75% load		
	d) 50% load		
xv)	Starting current*(inclusive of IS tolerance)* at		
	a. 100 % voltage	A	
	b. Minimum starting voltage	A	
xvi)	Starting time with minimum permissible voltage		
	a. Without driven equipment coupled	sec	
	b. With driven equipment coupled	sec	
xvii)	Safe stall time with 110% of rated voltage		
	a. From hot condition	sec	

	b. From cold condition	sec	
xviii)	**Torques :**		
	a. Starting torque at min. permissible voltage	(kg-mtr.)	
	b. Pull up torque at rated voltage.	(kg-mtr.)	
	c. Pull out torque	(kg-mtr.)	
	d. Min accelerating torque available	(kg-mtr.)	
	e. Rated torque	(kg-mtr.)	
xix)	Stator winding resistance per phase (at 20 Deg.C.)	Ohm	
xx)	GD^2 value of motors		
xxi)	Locked rotor KVA input (at rated voltage)		
xxii)	Locked rotor KVA/KW.		
xxiii)	**Bearings**		
	a. Type		
	b. Manufacturer		
	c. Self Lubricated or forced Lubricated		
	d. Recommended Lubricants		
	e. Guaranteed Life in Hours		
	f. Whether Dial Type thermometer provided		
	g. Oil pressure Gauge/switch		
	i. Range		
	ii. Contact Nos. & ratings		
	iii. Accuracy		
xxiv)	**Vibration**		
	a) Velocity	mm/s	
	b) Displacement	microns	
xxv)	Noise level	db	
3	**CONSTRUCTIONAL FEATURES**		
i	Stator winding insulation		
	a. Class & Type		
	b. Tropicalised (Yes/No)		
	c. Temperature rise over specified max.		
	i. Cold water temperature of 38 DEG. C.		
	ii. Ambient Air 50 DEG. C.		
	d. Method of temperature measurement		
	e. Stator winding connection		
	f. Number of terminals brought out		
ii	Type of terminal box for		
	a. stator leads		
	b. space heater		
	c. Temperature detectors		
	d. Instrument switch etc.		
iii)	For main terminal box		
	a. Location		
	b. Entry of cables		
	c. Recommended cable size		
	d. Fault level	MVA	
iv)	Temperature detector for stator winding		
	a Type		
	b. Nos. provided		
	c . Location		
	d. Make		
	e. Resistance value at 0 deg. C	ohms	

vi)	Paint shade		
vii).	Weight of(approx)		
	a. Motor stator (KG)		
	b. Motor Rotor (KG)		
	c. Total weight (KG)		
4	Relevant motor curves		

TECHNICAL DATA - PART - B (SUPPLIER DATA TO BE FURNISHED AFTER AWARD OF CONTRACT)

SL.NO	DESCRIPTION	UOM	DETAIL
	FOLLOWING DATA SHALL BE FILLED UP BY VENDOR FOR EACH INSTRUMENT(LS, RTD, THERMOWELL, TT, TG, PG, LIMIT SWITCH ETC.)		
1.0	MAKE		
1.1	MODEL		
1.2	TAG NO. / KKS NO.		
1.3	SERVICE		
1.4	QUANTITY		
1.5	OPERATING PRESSURE		
1.6	OPERATING TEMPERATURE		
1.7	DESIGN PRESSURE		
1.8	DESIGN TEMPERATURE		
1.9	RANGE		