	TITLE: 4X210MW+3X500 MW KAHALGAON STPP TECHNICAL SPECIFICATIONS FOR MISCELLANEOUS FGD TANKS	SPECIFICATION No: PE-TS-481-167-A101
		SECTION-I, SUB-SECTION-D
		REV. 00
		Date:

SECTION-I, SUB-SECTION-D

ANNEXURE-I

LIST OF MAKES

	TECHNICAL SPECIFICATION FOR MISCELLANEOUS TANKS SUB-VENDOR LIST ANNEXURE-I	SPECIFICATION NO. PE-TS-XXX-167-A001	
		VOLUME II-B	SECTION 'E'
		REVISION 01	DATE: 07/07/2015
		PAGE 2 of 5	

SUB-VENDORS - MISCELLANEOUS TANKS

S.NO	ITEM	SUB-VENDORS	PLACE	TECHNICAL LIMIT
1	CS PIPES ERW	TISCO	JAMSHEDPUR	UP TO 350 NB
		SAIL	ROURKELA	
		SURYA ROSHNI	BAHADURGARH	UP TO 400 NB
		JINDAL	GHAZIABAD	UP TO 350 NB
		RATNAMANI	KUTCH	UP TO 400 NB
		MAHARASHTRA SEAMLESS	RAIGARH	UP TO 500 NB
		WELSPUN	ANJAR	UP TO 400 NB (IS 3589)
2	CS PIPES SEAMLESS	MAHARASHTRA SEAMLESS	RAIGARH	UP TO 350 NB
		ISMT	AHMEDNAGAR	UP TO 150 NB
		JINDAL SAW	NASHIK	
		REMI METAL GUJRAT LTD	BHARUCH	UP TO 150 NB HOT FINISH & UPTO 100NB COLD FINISH
		ISMT	BARAMATI	UP TO 200 NB
3	SS PIPES	REMI	TARAPUR	
		RATNAMANI	KUTCH	
		APEX TUBES	BEHROR (ALWAR)	
		PRAKASH STEELAGE LTD	MUMBAI	SS SEAMLESS PIPE UPTO 50MM
		SUMITAMO	JAPAN	
4	STRUCTURAL STEEL / MS PLATE	SAIL		
		ESSAR STEEL		
		TISCO		
		RINL		
		JINDAL		
		M/S UTTAM VALUE STEEL (LLOYDS)		
		ISPAT		
		JSW		
		INDIAN IRON & STEEL CO. LTD		
5	GATE, GLOBE AND CHECK (STAINLESS STEEL VALVES)	A.V. VALVES LTD	AGRA	
		FLUIDLINE VALVES COMPANY PVT.LTD.	GHAZIABAD	
		M/S GM ENGINEERING	RAJKOT	
		INTERVALVE (INDIA) LTD.	PUNE	A) STEEL GATE VALVES: UPTO 50NB, #800 AND 65NB TO 150NB, #150 B) STEEL GLOBE VALVES: UPTO 50NB, #800 AND 65NB TO 100NB, #150 C)SUPPLIER NOT REGISTERED FOR NR VALVES
		LEADER VALVES LTD.	JALANDHAR	
		NITON VALVE INDUSTRIES PVT LTD	MUMBAI	
		NSSL LIMITED.	NAGPUR	
		STEEL STRONG VALVES (I) PVT.LTD.,	MUMBAI	LIMIT AS PER VD FILE AS ATTACHED IN SHEET 2
		VALTECH INDUSTRIES	MUMBAI	CAST CARBON & ALLOY STEEL - VALVE/RATING/SIZE- GV/150/900,GV/300/400, GV/600/300 , GV/GLV/NRV/900/250 , GLV/300/300,GLV/150/350/ , SCNRV/150/700, SCNRV/300/350, SCNRV/600/250.

		V.K. VALVES PVT. LTD.,	JALANDHAR	
		WEIR BDK VALVES	NEW DELHI	
		AUDCO		
		OSWAL INDUSTRIES		
6	GATE, GLOBE AND CHECK (CS STEEL VALVES)	A.V. VALVES LTD	AGRA	
		ATAM VALVES PVT. LTD.	JALANDHAR	
		FLUIDLINE VALVES COMPANY PVT.LTD.	GHAZIABAD	
		M/S GM ENGINEERING	RAJKOT	
		INTERVALVE (INDIA) LTD.	PUNE	A) STEEL GATE VALVES: UPTO 50NB, #800 AND 65NB TO 150NB, #150 B) STEEL GLOBE VALVES: UPTO 50NB, #800 AND 65NB TO 100NB, #150 C)SUPPLIER NOT REGISTERED FOR NR VALVES
		LEADER VALVES LTD.	JALANDHAR	
		NITON VALVE INDUSTRIES PVT LTD	MUMBAI	
		NSSL LIMITED.	NAGPUR	
		STEEL STRONG VALVES (I) PVT.LTD.,	MUMBAI	LIMIT AS PER VD FILE AS ATTACHED IN SHEET 2
		VENUS PUMPS AND ENGG. WORKS	KOLKATA	CC/CSS-GATE-BBT-UPTO600NB CL UPTO300,GATE-PSBT UPTO250NB CL 1500,GLV-BBT-UPTO300NB CL UPTO600,SCNRV-BBT-UPTO600NB CL UPTO150,SCNRV-BBT-UPTO300NB CL 300,SCNRV-PSBT-UPTO150NB CL UPTO900
		VALTECH INDUSTRIES	MUMBAI	CAST CARBON & ALLOY STEEL - VALVE/RATING/SIZE- GV/150/900,GV/300/400, GV/600/300 , GV/GLV,/NRV/900/250 , GLV/300/300,GLV/150/350/ , SCNRV/150/700, SCNRV/300/350, SCNRV/600/250.
		V.K. VALVES PVT. LTD.,	JALANDHAR	
		WEIR BDK VALVES	NEW DELHI	
		AUDCO -L&T	CHENNAI / COIMBATORE	
		OSWAL INDUSTRIES		
		HITECH	AHMEDABAD	
		KSB WATER PUMPS / VALVES	COIMBATORE	
		KBL	KONDHAPURI	
		HAWA ENGINEERS	AHMEDABAD	
		BHEL	GOINDWAL	
		FOURESS ENGG	MUMBAI	UPTO 600 NB, CL-300 & 300NB CL-600
		FOURESS ENGG	AURANGABAD	
7	LEVEL INDIATOR FLOAT AND BOARD TYPE	FLOW STAR	FARIDABAD	
		SCIENTIFIC DEVICES	MUMBAI	
		GAUGES BOURDEN	PANVEL	
		PUNE TECHTROL	PUNE	
		SBEM	PUNE	
		LEVCON	KOLKATA	
		SIGMA	[illegible]	04/05/2021

	TECHNICAL SPECIFICATION FOR MISCELLANEOUS TANKS SUB-VENDOR LIST ANNEXURE-I	SPECIFICATION NO. PE-TS-XXX-167-A001	
		VOLUME II-B	SECTION 'E'
		REVISION 01	DATE: 07/07/2015
		PAGE 4 of 5	

		CHEMTROL		
		DK INSTRUMENT	KOLKATA	
		V AUTOMAT	DELHI	
8	**PAINT**	ASIAN PAINT		
		BERGER		
		KANSAI NEROLAC		
		JOTUN		
		SHALIMAR		
		JENSON & NICHOLSON (I) LTD		
		CDC CARBOLINE (I) LTD.		
		ADDISON PAINTS LTD		
		GRAND POLYCOAT		
		BOMBAY PAINTS		
		HEMPLE PAINTS (SINGAPORE)		
		AKZONOBEL COATINGS		
9	**FITTINGS (MS/SS)**	PIPE FIT ENGINEERS	VADODARA	
		GUJRAT INFRA PIPES	VADODARA	
		MS FITTINGS	KOLKATA	
		TUBE PRODUCT	VADODARA	
		SIDDARTH & GAUTAM	FARIDABAD	
		EBY	MUMBAI	
		NL HAZRA	KOLKATA	
		EXCEL METAL		
		INTERTECH		
		FITTECH		
		METAL LLOYDS	MUMBAI	
		TRUE FORGE	FARIDABAD	
10	**SEAL POT / NAOH BREATHER**	SELF MANUFACTURED ITEM		
	INSPECTION CATEGORIZATION			
	1. CAT I :INSPECTION BY OWNER, BHEL/BHEL NOMINATED TPIA & VENDOR .MDCC WILL BE ISSUED BASED ON INSPECTION REPORT IN LINE ITH APPROVED QAP.			
	2. CAT II:INSPECTION BY BHEL/BHEL NOMINATED TPIA & VENDOR. MDCC WILL BE ISSUED BASED ON INSPECTION REPORT IN LINE ITH APPROVED QAP.			
	3. CAT III: MDCC WILL BE ISSUSED BASED COC & MTC ISSUSD BY VENDOR AND VERIFICATION BY BHEL/OWNER IN LINE WITH APPROVED QAP/CHECK LIST			

The make of Sub-vendor items shall be generally as indicated above which is subject to customer / BHEL approval during detail engineering.

Make of any unlisted items shall be subject to customer / BHEL approval during detail engineering. For such items, bidder to furnish list of sub-vendors during detail engineering stage for Customer / BHEL's review and approval. Bidder shall furnish following supporting documentation within 1 month of placement of LOI. Thereafter no request for additional sub-vendor shall be entertained.

04/05/2021

a) Documentation to show that the equipment /system has been supplied for a plant of similar or higher capacity.

b) Documentation in the form of certificate that the equipment/system has been operating satisfactorily for two years as on the scheduled date of bid opening.

The successful bidder will get the makes of all items approved from Customer/ Consultant during detail engineering within two months of placement of LOI. The complete list will be necessarily be submitted within one month of placement of LOI to ensure timely placement of order for BOIs

Bidder to assess the capability of their proposed sub-vendors in terms of preparation of drawings, calculations, documents, quality assurance, supply of material etc. as per project schedule before placing the order on them.

Dealers are not acceptable for any item of the package. Bidder shall procure all items including plates, structural, flanges; counter flanges etc. from approved sub vendor only.

QUALIFYING REQUIREMENTS FOR RUBBER LINING & VINYL ESTER GLASS FLAKE FOR SLURRY TANKS

Lining for the Wet Limestone based Flue Gas Desulphurisation (FGD) System offered by the Bidder shall be only from such bidders(s) who has previously executed this lining application for coal based thermal power station for Wet Limestone based FGD application or similar corrosive environment of min 2500 Sq.m for at least 1 project such that the lining should have been in successful operation for a period not less than two (2) year reckoned as on the date of bid opening. Proof of such experience (End user certificate/performance certificate) shall be submitted along with the offer.

	TITLE: 4x210MW+3x500 MW KAHALGAON STPP TECHNICAL SPECIFICATION FOR MISCELLANEOUS GFD TANK	SPECIFICATION No: PE-TS-481-167-A101	
		SECTION-I, Sub Section-D	
		REV. 00	DATE:
		SHEET : 1	

Sl.no.	Item	Category of Inspection	Sub-vendor	Place	Remarks
1.	PAINT	III	ASIAN PAINT		
		III	BERGER		
		III	KANSAI NEROLAC		
		III	JOTUN		
		III	SHALIMAR		
		III	JENSON & NICHOLSON (I) LTD		
		III	CDC CARBOLINE (I) LTD.		
		III	ADDISON PAINTS LTD		
		III	GRAND POLYCOAT		
NOTES: INSPECTION CATEGORIZATION					
CAT I: INSPECTION BY OWNER, BHEL/BHEL NOMINATED TPIA & VENDOR. MDCC WILL BE ISSUED BASED ON INSPECTION REPORT IN LINE ITH APPROVED QAP.					
CAT II: INSPECTION BY BHEL/BHEL NOMINATED TPIA & VENDOR. MDCC WILL BE ISSUED BASED ON INSPECTION REPORT IN LINE ITH APPROVED QAP.					
CAT III: MDCC WILL BE ISSUSED BASED COC & MTC ISSUSD BY VENDOR AND VERIFICATION BY BHEL / OWNER IN LINE WITH APPROVED QAP/CHECK LIST					

- The list of all bought out items like gearbox, coupling, bearings etc. with makes and country of origin and contact details of the manufacturers to be mentioned along with offer to be submitted in the format attached in Section II, Annexure-6 as information to BHEL.

- Acceptance of makes shall be subject to BHEL/ End customer acceptance during the detailed engineering without cost and delivery implication to BHEL.

- Bidder has to submit the sub-vendor questionnaire (attached herewith) along with necessary credentials in case the proposed sub-vendor is not as per the list provided.

- The complete list will be necessarily submitted within one month of placement of LOI to ensure timely placement of order for BOIs. Bidder to assess the capability of their proposed sub-vendors in terms of preparation of drawings, calculations, documents, quality assurance, supply of material etc. as per project schedule before placing the order on them.

NTPC	Project :			MECHANICAL ITEMS- INDICATIVE SUB-VENDOR LIST				Doc No	:	
	Package : FGD Package			LIST OF ITEMS REQUIRING QUALITY PLAN AND SUB-SUPPLIER APPROVAL				Rev No	:	
	Supplier :							Date	:	
	Contract No.:							Page	:	
Sl No	**ITEM**	**QP / Insp. Cat.**	**QP No:**	**QP Sub. Sch.**	**QP approval Sch.**	**Proposed sub-supplier**	**Place**	**Sub-Supplier approval status / category**	**Sub-supplier Details submission sch**	**Remark**
20	Rubber Lining of Pipes					Jasmino Polymertech	Taloja	A		
						CORI Engineers	Chennai	A		
						Western Rubber	Mumbai	A		
						Elastomer Lining	Ambernath	A		
						Emkay Rubber	Mumbai	A		
						Rishi	Bahalgarh	A		
						Poly Rubber	Mumbai	A		
						Temsec Rubber	Kolkata	A		
						Presidency Rubber	Howrah	A		
						Arul Rubber Pvt.Ltd	Hosur	A		
						Industrial Moulders	Vadodara	A		
21	FRP PIPE with fittings					Main Contractor Approved Source				
22	Rubber Lining for Tank and Absorber					MIL Industries	Chennai	A		
						TIP TOP	USA / India	A		
						Stealuer	Germany/ India	A		
						Arul Rubber	Hossur	A		
						Temsec Rubber	Kolkata	A		
23	Ventillation Fans					Patel Air	Ahmedabad	A		
						Marathan Electric	Kolkata	A		
						Howden	Kolkata / Chennai	A		
						SK System	Sonepat	A		
						Andrew Yule	Kalyani	A		
24	Structual Steel Rolled /Plate Sections(CS)					SAIL	INDIA	A		
						TATA STEEL	INDIA	A		
						JSPL	INDIA	A		
						ESSAR	INDIA	A		
						Ispat Industries	INDIA	A		
						Lloyeds Steel	INDIA	A		
						JSW	INDIA	A		
25	Structural Steel - Pipes IS 1161					Main Contractor Approved Source				
26	S S Plate					SAIL	India	A		
27	Insulation Cladding					Main Contractor Approved Sources				

INDICATIVE VENDOR LIST

ANNEXURE-A

- Bidder has to submit the sub-vendor questionnaire (attached herewith) along with necessary credentials in case the proposed sub-vendor is not as per the list provided.

- Acceptance of makes shall be subject to BHEL/ End customer acceptance during the detailed engineering without cost and delivery implication to BHEL.

एनटीपीसी NTPC

CORPORATE QUALITY ASSURANCE

SUB-VENDOR QUESTIONNAIRE

i.	Item/Scope of Sub-contracting			
ii.	Address of the registered office	Details of Contact Person (Name, Designation, Mobile, Email)		
iii.	Name and Address of the proposed Sub-vendor's works where item is being manufactured	Details of Contact Person: (Name, Designation, Mobile, Email)		
iv.	Annual Production Capacity for proposed item/scope of sub-contracting			
v.	Annual production for last 3 years for proposed item/scope of sub-contracting			
vi.	**Details of proposed works**			
1.	Year of establishment of present works			
2.	Year of commencement of manufacturing at above works			
3.	Details of change in Works address in past (if any)			
4.	Total Area			
	Covered Area			
5.	Factory Registration Certificate	Details attached at Annexure – F2.1		
6.	Design/ Research & development set-up (No. of manpower, their qualification, machines & tools employed etc.)	Applicable / Not applicable if manufacturing is as per Main Contractor/purchaser design) Details attached at Annexure – F2.2 (if applicable)		
7.	Overall organization Chart with Manpower Details (Design/Manufacturing/Quality etc)	Details attached at Annexure – F2.3		
8.	After sales service set up in India, in case of foreign sub-vendor (Location, Contact Person, Contact details etc.)	Applicable / Not applicable Details attached at Annexure – F2.4		
9.	Manufacturing process execution plan with flow chart indicating various stages of manufacturing from raw material to finished product including outsourced process, if any	Details attached at Annexure – F2.5		

CORPORATE QUALITY ASSURANCE

SUB-VENDOR QUESTIONNAIRE

10.	**Quality Control exercised during receipt of raw material/BOI, in-process , Final Testing, packing**	**Details attached at Annexure – F2.6**
11.	**Manufacturing facilities** **(List of machines, special process facilities, material handling etc.)**	**Details attached at Annexure – F2.7**
12.	**Testing facilities** **(List of testing equipment)**	**Details attached at Annexure – F2.8**
13.	**If manufacturing process involves fabrication then-** **List of qualified Welders** **List of qualified NDT personnel with area of specialization**	**Applicable / Not applicable** **Details attached at Annexure – F2.9** **(if applicable)**
14.	**List of out-sourced manufacturing processes with Sub-Vendors' names & addresses**	**Applicable / Not applicable** **Details attached at Annexure. –F2.10** **(if applicable)**
15.	**Supply reference list including recent supplies**	**Details attached at Annexure – F2.11** **(as per format given below)**

Project/ package	*Customer Name*	*Supplied Item (Type/Rating/Model /Capacity/Size etc)*	*PO ref no/date*	*Supplied Quantity*	*Date of Supply*

16.	**Product satisfactory performance feedback letter/certificates/End User Feedback**	**Attached at annexure - F2.12**
17.	**Summary of Type Test Report (Type Test Details, Report No, Agency, Date of testing) for the proposed product (similar or higher rating)** **Note:- Reports need not to be submitted**	**Applicable / Not applicable** **Details attached at Annexure – F2.13** **(if applicable)**
18.	**Statutory / mandatory certification for the proposed product**	**Applicable / Not applicable** **Details attached at Annexure – F2.14** **(if applicable)**
19.	**Copy of ISO 9001 certificate** **(if available)**	**Attached at Annexure – F2.15**
20.	**Product technical catalogues for proposed item (if available)**	**Details attached at Annexure – F2.16**

Name:		**Desig:**		**Sign:**		**Date:**	

Company's Seal/Stamp:-

SECTION-I, SUB-SECTION- D

ANNEXURE-II

QUALITY PLANS

QAP OF MS PLATES

Manufacturer's Name: Approved sub vendor	MANUFACTURING QUALITY PLAN ITEM: MS PLATES Sub-system- Misc.tanks	PROJECT: PACKAGE: Misc.Tanks (Site Fabricated) LOI No. : Customer : BHEL	BHEL Doc. No.: Rev. No. : 0 Date: SHEET 1 OF 1

Sl. No.	Components and Operation	Characteristic/ Item	Class	Type of Check	Extent of Check	Reference Document	Acceptance Norm	Format of Record (D*)	D	Agency M	Agency B	Agency C	Remarks
1	2	3	4	5	6	7	8	9		11			12
	RAW MATERIAL												
1	STEEL PLATES	Chemical compostion and Mechnical test	MA	Review of corelated MTC	one/heat	IS:2062	IS:2062	Mfgr. TC	√	P	V	V	Refer Note below
2		Visual and dimensionl check	MA	Visual and measurement	100%	Mfg.TC	Mfg.TC IS1852	Mfgr. TC	√	P	**W	**W	
3		Identification/marking	MA	Corelation establish	100%	As per manufacturing practice	As per manufacturing practice IS 2062	Mfgr. TC	√	P	V	**W	

	LEGEND : * RECORDS INDENTIFIED WITH "TICK" SHALL BE INCLUDED		DOC. NO. : Rev No.0
	C: BHEL B : VENDOR M.Manufacturer	P - Perform W - Witness V - Verification	
Manufacturer / Contractor / Sub contractor Signature	CR-Critical Characteristics MA - Major Characteristics MI- Minor Characteristics	FOR BHEL	FOR CUSTOMER APRD. BY

Notes ** In case material is despatced directly from Approved sub-vendor plant/stockyard or procured from dealer against co related TC's witnessing by BHEL is waived off and material will be accepted based on MTC of approved sub vendor. In case material is procured from dealer and co related TC's are not available,check on 100% quantity of plates will be performed on sample drawn from them at NABL certified/approved laboratory for chemical & physical properties,however dimensional check shall be witnessed by BHEL

- Above quality plan is tentative. Final QAP shall be decided during detailed engineering.

QAP OF PIPE FITTINGS ,FLANGES & ACCESSORIES

Manufacturer's Name:	QUALITY ASSURANCE PLAN INSPECTION CHECK LIST FOR PIPE FITTINGS ,FLANGES & ACCESSORIES	PROJECT: PACKAGE: Misc.Tanks (Site Fabricated) LOI No. : Customer : BHEL	BHEL Doc. No.: Rev. No. : 0 Date: SHEET 1 OF 1

Sl. No.	Components and Operation	Class	Type of Check	Reference Document/Acceptance Norm	Agency M	Agency B	Agency C	Remarks
1	2	3	4	5	6			7
1	Pipes Fittings,Flanges & Accessories	MI	Visual	As per Approved Data Sheet/Tech spec.	P	V	V	
2		MI	Dimensional	As per Approved Data Sheet/Tech spec.	P	V	V	
3		MI	Review of TC	As per MTC	P	V	V	
		MA	Hydro Test	As per MTC	P	V	V	

LEGEND : * RECORDS INDENTIFIED WITH "TICK" SHALL BE INCLUDED

C : CUSTOMER /BHEL
B. : VENDOR
M. : Manufacturer

P - Perform
W - Witness
V - Verification

DOC. NO. :

Manufacturer / Contractor / Sub contractor	CR-Critical Characteristics MA - Major Characteristics MI- Minor Characteristics IR-Inspection Report ,MTC-Material/Manufacturer's Test. Certificate	FOR BHEL	FOR CUSTOMER	APRD. BY	APPROVAL SEAL
Signature					

- Above quality plan is tentative. Final QAP shall be decided during detailed engineering.

बी एच ई एल BHEL	CONTRACTOR'S NAME & ADDRESS	MANUFACTURING QUALITY PLAN	PROJECT
		ITEM : RUBBER LINING OF PIPING CONFORMING TO Tech Spec.	Q.P.No:7374QPC01 REV-01
		BHEL Customer No. : 7374,7391& 7392	Dt- 13.02.2019
			PACKAGE
			CONTRACT No.:
			MAIN-SUPPLIER

S.No	COMPONENT & OPERATIONS	CHARACTRISTICS	CLASS	TYPE OF CHECK	QUANTUM OF CHECK M	REFERENCE DOCUMENT	ACCEPTANCE NORMS	FORMAT OF RECORDS	D*	AGENCY M	AGENCY C	AGENCY N	REMARKS
1	2	3	4	5	6	7	8	9	10	** 11			12
1.0	**RAW MATERIAL**												
1.1	Rubber Mix	a. Tensile Strength b. % Elongation c. Specific Gravity d. Hardness e. Thickness of Sheet	Major	Verfication	1 sample/lot	As per Tech Spec./Relevant IS , Material Spec.		TC	√	P	V	-	TC - Test Certificate
		f. Resistance to Bleeding #	Major	Chemical	1 sample/lot	Immersion for 24 hours @40 deg C in 10% of H2SO4 and 10% of HNO3	No discoloration and Weight change -0% +4%	TC	√	P	V	-	# TC shall be from NABL approved lab.
2.0	**INPROCESS INSPECTION**												
2.1	Surface Preparation	Cleanliness & Uniformity	Major	Visual	100%	IS 4682 Part I , Sa 2.5 Grade Surface Finish		TC	-	P	V	-	
2.2	Continuity of Lining at Uncured stage	Spark test	Major	Visual	100%	IS 4682 Part I		TC	-	P	V	-	
2.3	Curing of Rubber Lining	Control of Pressure,Temperature & Time	Major	Visual	100%	IS 4682 Part I and Manufacturer's Procedure		Log Book	-	P	V	-	
3.0	**FINAL INSPECTION**												
3.1	Complete Lining	a. Surface Defects	Major	Visual	100%	IS 4682 Part I		IR	√	P	W	-	
		b. Shore Hardness	Major	Measurement	Random	IS 4682 Part I		IR	√	P	W	-	
		c. Spark Test	Critical	Visual	100%	IS 4682 Part I		IR	√	P	W	-	
		d. Rubber lining Thickness	Major	Measurement	Random	IS 4682 Part I		IR	√	P	W	-	
		e. Adhesion Test	Critical	Peel-Off test	One sample per Vulc. Lot	IS 4682 Part I		IR	√	P	W	-	
4.0	**Documentation**	Review of Reports	Major	Verification	100%	All reports required as per QP.				P	V	-	

LEGEND:

* RECORDS, INDENTIFIED WITH "TICK" (√) SHALL BE ESSENTIALLY INCLUDED BY SUPPLIER IN QA DOCUMENTATION.

** M:MANUFACTURER/SUB-SUPPLIER,C: BHEL/BHEL AUTHORISED AGENCY, N: NTPC, P: PERFORM W: WITNESS AND V: VERIFICATION

CHP: NTPC SHALL IDENTIFY IN COLOUM 'N' AS 'W'

PREPARED BY	APPROVED BY	FOR NTPC USE:	REVIEWED BY	APPROVED BY	APPROVAL SEAL
MAIN-SUPPLIER					
SIGNATURE	PAGE 01 OF 02				

DOC.NO. 6130-109-RVM-R-012 Rev 01 CAT...

बी एच ई एल BHEL	CONTRACTOR'S NAME & ADDRESS	**MANUFACTURING QUALITY PLAN** **ITEM : RUBBER LINING OF PIPING CONFORMING TO IS 4682 PART I.** **BHEL Customer No. : 7374,7391& 7392**	Q.P.No:7374QPC01 REV-01 Dt- 13.02.2019	PROJECT : PACKAGE CONTRACT No.: MAIN-SUPPLIER

S.No	COMPONENT & OPERATIONS	CHARACTRISTICS	CLASS	TYPE OF CHECK	QUANTUM OF CHECK	REFERENCE DOCUMENT	ACCEPTANCE NORMS	FORMAT OF RECORDS	D*	AGENCY			REMARKS
					M					M	C	N	
1	2	3	4	5	6	7	8	9	10	** 11			12

NOTES:

1. **Rubber Lining Vendor's Name & Address

a. M/s Lebracs Rubber Linings Private Limited ; Works Address : No16, Sedrapet, Puducherry-605111

b. M/s Jasmino Polymertech Pvt Ltd ; Works Address : L-61, MIDC Industrial Area, Taloja, Dist-Raigad, Maharashtra -410208

2. NTPC Inspection Category : Cat III
3. Repair, if any, should be carried out by same as per original rubber.
4. Adhesion test coupon shall be as prepared as per governing code.
5. NTPC Surveillance check may be carried out, if required.

		LEGEND: * RECORDS, INDENTIFIED WITH "TICK" (✓) SHALL BE ESSENTIALLY INCLUDED BY SUPPLIER IN QA DOCUMENTATION. ** M: MANUFACTURER/SUB-SUPPLIER, C: BHEL / BHEL AUTHORISED AGENCY, N: NTPC, P: PERFORM W: WITNESS AND V: VERIFICATION		DOC.NO. 6130-09-RVM-R-012 REV01.	CAT...	
PREPARED BY	APPROVED BY					
MAIN-SUPPLIER						
SIGNATURE	PAGE 02 OF 02		FOR NTPC USE:	REVIEWED BY	APPROVED BY	APPROVAL SEAL

-Above quality plan is tentative. Final QAP shall be decided during detailed engineering.

NTPC	SYSTEM EQUIPMENT Misc. Tanks	STANDARD FIELD QUALITY PLAN CONFORMING TO CODE: IS:803-1976	QP NO.: 0000-999-QOM – I -001 Rev. No 0 Date 15-02-2005 Page 1 Of 1 VALID UPTO : 14-02-2008

REVIEWED BY: APPROVED BY

अनुमोदित APPROVED

अनिल गुप्ता
ANIL GUPTA
अपर महाप्रबंधक (गुणवत्ता आश्वासन)
Addl. General Manager (QA)
एन टी पी सी लि./NTPC LTD.

SL. NO	ACTIVITY AND OPERATION	CHARACTERISTICS / INSTRUMENTS	CLASS # OF CHECK	TYPE OF CHECK	QUANTUM OF CHECK	REFERENCE DOCUMENT	ACCEPTANCE NORMS	FORMAT OF RECORD	D *	REMARKS
1.	2.	3.	4.	5.	6.	7.	8.	9.		10.
1	**RAW MATERIAL INSPECTION**									
1.1	MS Plates	Mechanical & Chemical	B	Mechanical & Chemical	1 sample per Heat	Appd Drg./ Data Sheet	Relevant Material Specs	TC		In absence of Correlated TCs, Check Testing shall be witnessed by NTPC.
		Surface Defects	B	Visual	100%	No Pitting/ Corrosion	Damaged Plates not to be used	IR		
		Thickness	B	Measure	100%	Appd Drg.	Appd Drg.	IR		
2	**IN PROCESS INSPECTION**									
2.1	Welding	WPS/PQR/WQR	A	Qualification / Verification	100%	ASME Sec-IX	ASME Sec-IX	WPS/ PQR		See Note # 1.
		Marking, Cutting, Rolling, Joint Set-up	C	Visual & Measure	100%	Appd Drg.	Appd Drg.	IR		
		NDT on Back Gauging	B	DPT	100%	ASTM E-165	No Indications	IR		Except for Bottom Plates.
		NDT on Root Run	B	DPT	100%	ASTM E-165	No Indications	IR		For Bottom Plates only.
		NDT on Finished Welds	A	Vacuum Testing	100%	IS:803	No Leakage	IR		For Bottom Plates only.
3	**FINAL INSPECTION**									
3.1	Finished Tank	Finish, Orientation	B	Visual	100%	IS:803 & Appd. Drg.	IS:803 & Appd. Drg.	IR		
		Dimensions including Verticality, Ovality	B	Visual & Measure	100%	IS:803 & Appd. Drg.	IS:803 & Appd. Drg.	IR		
		NDT on Final Welding	A	DPT	100%	ASTM E-165	No Indications	IR		Except for Bottom Plates. See Note # 2.
		Leak Proof ness	A	Water Fill Test	100%	IS:803 & Appd. Drg.	No Leakage	IR		For 24 Hours
3.2	Painting	Surface Preparation	B	Visual	100%	IS:803, Appd. Drg., NTPC Specs	IS:803, Appd. Drg., NTPC Specs	IR		
		Coating Thickness, Colour	B	Visual & DFT	100%	IS:803, Appd. Drg., NTPC Specs	IS:803, Appd. Drg., NTPC Specs	IR		

Note : - 1. Only Qualified Welders are to be used. If Welders qualified by NTPC/ BHEL/ LRQA/ BVQI are available & continuously doing the job, then re-qualification is not necessary.
2. NDT on Finished weld shall also include Spot RT (10%), if Joint efficiency is taken as 0.85, in line with requirements of Code.

LEGEND: * RECORDS, INDENTIFIED WITH "TICK" (√) SHALL BE ESSENTIALLY INCLUDED BY SUPPLIER IN QA DOCUMENTATION.
LEGEND TO BE USED: CLASS #: A = CRITICAL, B = MAJOR, C = MINOR; 'A' SHALL BE WITNESSED BY NTPC FQA, **'B'** SHALL BE WITNESSED BY NTPC ERECTION/ CONSTRUCTION DEPTT AND **'C'** SHALL BE WITNESSED BY MAIN SUPPLIER (A & B CHECK SHALL BE NTPC CHP STAGE)

	TITLE: 4X210MW+3X500 MW KAHALGAON STPP TECHNICAL SPECIFICATIONS FOR MISCELLANEOUS FGD TANKS	SPECIFICATION No: PE-TS-481-167-A101
		SECTION-I, SUB-SECTION- D
		REV. 00
		Date:

SECTION-I, SUB-SECTION- D

ANNEXURE-III

SIZING CALCULATION , SELECTION PARAMETER FOR ALL TANKS (SLURRY & WATER) AND TYPICAL DRAIN SUMPS SKECTH

P.S. CHOWDHURY
Addl. General Manager (PE - TF & R&M)
NTPC Limited
(A Government of India Enterprise)
Engineering Office Complex
A-8A, Sector-24, NOIDA-201301 (U.P.)
E-mail : pschowdhury@ntpc.co.in

1. **Gas condition for Tank Sizing:**

S.No.	Gas Condition	Feature
1	VWO	FGD Design Point

2. **Tank Sizing Basis**

Tank size is decided as per the following

LL – Pump LL level m

L – LL + 0.2 m

H - Effective height m

HH - H + 0.2 m

Top - HH + 0.5 m (If tank Ht. <10m)

-HH + 0.8 m (If tank Ht. >10m)

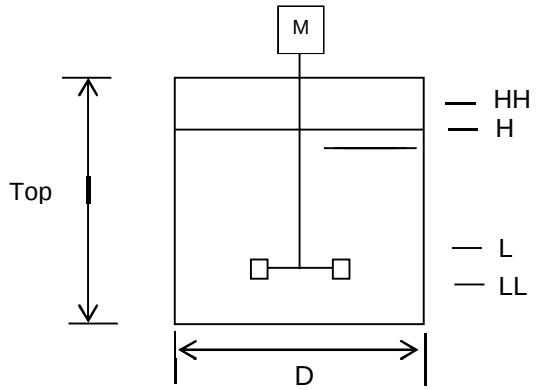

Effective volume = 3.14 / 4 x Φ ^ 2 x (H-L)

Hold volume = 3.14 / 4 x Φ ^ 2 x (HH)

H/D ratio = 1-1.2

NTPC
A Maharatna Company
Mob.: 9650992617
P.S. CHOWDHURY
Addl. General Manager (PE - TF & RE)
NTPC Limited
(A Government of India Enterprise)
Engineering Office Complex
A-8A, Sector-24, NOIDA-201301 (U.P.)
E-mail : pschowdhury@ntpc.co.in

S. No	Item No	Service	Design Spec	Process Parameter	Design Basis
1	00HTM 03 BB001	Filtrate water Tank	5000 mm D X 5300mm H Quantity = 1 no (Common for all units)	Process Capacity	127.3 m3/h (Stream No: <402> x 5 absorber units)
				Retention Time	0.5 Hr
				Required volume	127.3 m3/h x 0.5 hr =63.65 m3

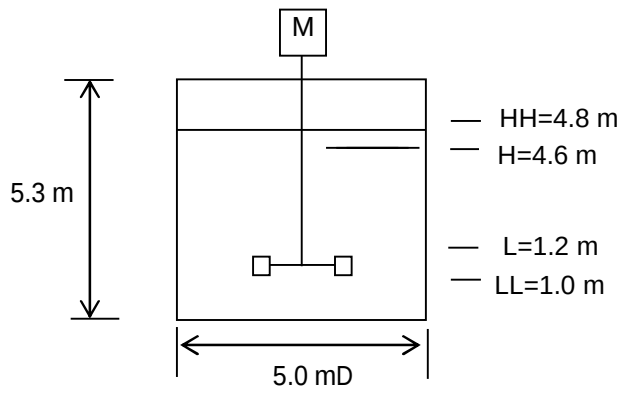

Tank Level is designated as follows

Top	5.3
HH	4.8
H	4.6
L	1.2*
LL	1.0*

<u>Circular Tank</u>

Effective volume

= 5.0 m Φ ^ 2 / 4 x π x (4.6-1.2) m

= 66.76 m3>63.65 m3

Hold Volume

= 5.0 m Φ ^ 2 / 4 x π x 4.8 m

= 94.25 m3

*L and LL level is finalized by vendor's information of filtrate water pump and agitator.

NTPC
A Maharatna Company
Mob.: 9650992617
P.S. CHOWDHURY
Addl. General Manager (PE - TF & R&M)
NTPC Limited
(A Government of India Enterprise)
Engineering Office Complex
A-8A, Sector-24, NOIDA-201301 (U.P.)
E-mail : psch@ntpc.co.in

S.No	Item No	Service	Design Spec	Process Parameter	Design Basis
2	00HTM00 BB001	Primary Hydro cyclone feed Tank	6500 mm D x 7050 mm H Quantity = 1 no. (Common for all units)	Process Capacity	159.208 m3/h (Stream No: <201> x 5 absorber units)
				Retention Time	1 Hour
				Required volume	159.2 m3/h x 1 hr = 159.2 m3

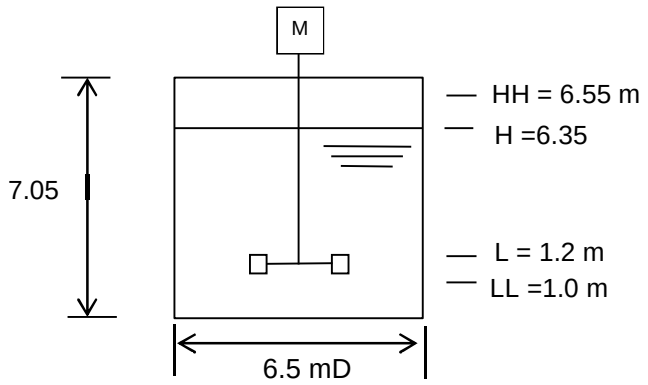

Tank Level is designated as follows

Top	7.05
HH	6.55
H	6.35
L	1.2*
LL	1.0*

<u>Circular Tank</u>

Effective volume

= 6.5 m Φ ^ 2 / 4 x π x (6.35-1.2)m

= 170.89 m3 > 159.2 m3

Hold Volume

= 6.5 m Φ ^ 2 / 4 x π x 6.55 m

=217.34 m3

*L and LL level is finalized by vendor's information of Waste water hydro cyclone feed pump and agitator.

NTPC
A Maharatna Company
P.S. CHOWDHURY
Addl. General Manager (PE - TF & R&M)
NTPC Limited
(A Government of India Enterprise)
Engineering Office Complex
A-8A, Sector-24, NOIDA-201301 (U.P.)

S.No	Item No	Service	Design Spec	Process Parameter	Design Basis
3	00HTM04 BB001	Secondary Hydro cyclone feed Tank	5500 mm D X 6050mm H Quantity = 1 no. (Common for all units)	Process Capacity	91.94 m3/h (Stream No: <202> x 5 absorber units)
				Retention Time	1 Hour
				Required volume	91.94 m3/h x 1 hr = 91.94 m3

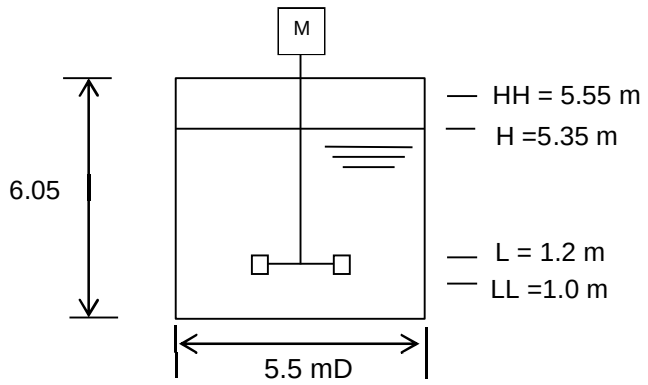

Tank Level is designated as follows

Top	6.05
HH	5.55
H	5.35
L	1.2*
LL	1.0*

<u>Circular Tank</u>

Effective volume

= 5.5 m Φ ^ 2 / 4 x π x (5.35-1.2) m = 98.6 m3>91.94 m3

Hold Volume

= 5.5 m Φ ^ 2 / 4 x π x 5.55 m = 131.8 m3

*L and LL level is finalized by vendor's information of Waste water hydro cyclone feed pump and agitator.

please provide capacity calculation for primary and secondary

NTPC A Maharatna Company
P.S. CHOWDHURY
Addl. General Manager (PE - TF & R&M)
NTPC Limited
(A Government of India Enterprise)
Engineering Office Complex
A-8A, Sector-24, NOIDA-201301 (U.P.)
E-mail : pschowdhury@ntpc.co.in

S. No	Item No	Service	Design Spec	Process Parameter	Design Basis
4	00HTM 05BB0 01	Waste water storage Tank	8000 mmD X 9600 mmH Quantity = 1 no.	Process Capacity	44.07 m3/h (Stream No: <205> x 5 Absorber units)
				Retention Time	8.0 Hours
				Required volume	44.07 m3/h x 8.0 hr = 352.6 m3

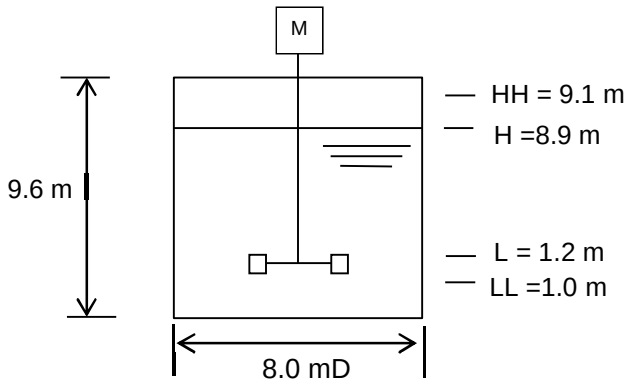

Tank Level is designated as follows

Top	9.6
HH	9.1
H	8.9
L	1.2*
LL	1.0*

<u>Circular Tank</u>

Effective volume

= 8.0 m Φ ^ 2 / 4 x π x (8.9-1.2) m

= 387 m3 > 352.6 m3

Hold Volume

= 8.0 m Φ ^ 2 / 4 x π x 9.1 m

= 457.4 m3

*L and LL level is finalized by vendor's information of Waste water pump and agitator.

NTPC A Maharatna Company
P.S. CHOWDHURY
Addl. General Manager (PE - TF & R&M)
NTPC Limited
(A Government of India Enterprise)
Engineering Office Complex
A-8A, Sector-24, NOIDA-201301 (U.P.)
E-mail : pschowdhury@ntpc.co.in

S. No	Item No	Service	Design Spec	Process Parameter	Design Basis
5	00HTK03BB001/002	Lime stone slurry storage Tank	13000 mmD X 13450mmH Quantity = 2 no. (1W+1S) (Common for all units)	Process Capacity for each tank	a) Limestone required = 27.437 TPH (Stream No: <501> x 5 Units) b) 20% (w/w) Limestone slurry = 27.437 TPH / 20% mass flow rate = 137.185 TPH c) 20%(w/w) Limestone slurry density = 1.130 t/m3 d) 20% (w/w) Limestone slurry = 137.185 TPH / 1.130 volume flow rate = 121.403 m3/hr
				Retention Time	12.0 hr
				Required volume	121.403 m3/h x 12 hr = 1456.84 m3

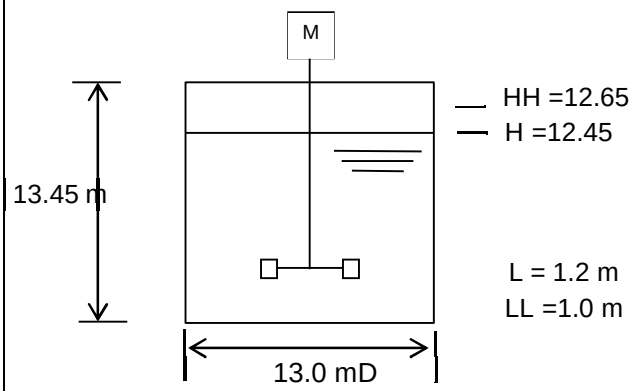

Tank Level is designated as follows

Top	13.45
HH	12.65
H	12.45
L	1.2*
LL	1.0*

<u>Circular Tank</u>

Effective volume

= 13.0 m Φ ^ 2 / 4 x π x (12.45-1.2) m

= 1493.24 m3 > 1456.84 m3

Hold Volume

= 13.0 m Φ ^ 2 / 4 x π x 12.65 m

= 1679.1 m3

*L and LL level is finalized by vendor's information of Limestone slurry Feed pump and agitator.

NTPC
A Maharatna Company
Mob.: 9650992617
P.S. CHOWDHURY
Addl. General Manager (PE - TF & R&M)
NTPC Limited
(A Government of India Enterprise)
Engineering Office Complex
A-8A, Sector-24, NOIDA-201301 (U.P.)
E-mail : pschowdhury@ntpc.co.in

S. No	Item No	Service	Design Spec	Process Parameter	Design Basis
6	00HTK00BB001	Auxiliary Absorbent Tank	12000mmD x 12900mmH Quantity = 1 no (Common for all units)	Process Capacity	Absorber Tank Volume = 1330.56 m3 (with 20% margin) (500MW Absorber tank Size –
				R T	Further, Bidder to provide the portable pumps of suitable capacity to drain the remaining slurry from the tank in max 2 hour into absorber area sump.
				Required volume	1330.56 m3

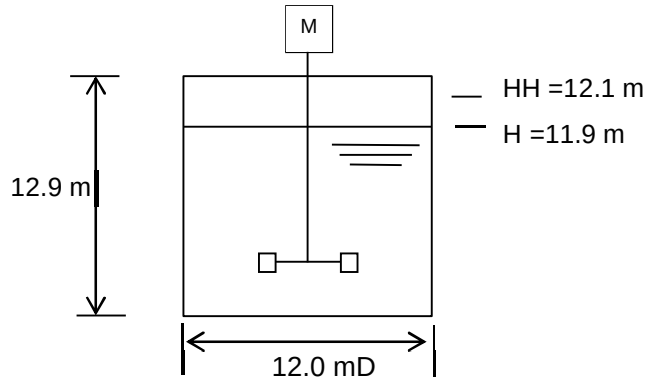

Tank Level is designated to be empty during normal operation. Therefore the volume from bottom to H is considered as effective volume of tank.

Top	12.9
HH	12.1
H	11.9
L	1.2*
LL	1.0*

<u>Circular Tank</u>

Effective volume

= 12.0 m Φ ^ 2 / 4 x π x 11.9 m

= 1345.8 m3 > 1330.56 m3

Hold Volume

= 12.0 m Φ ^ 2 / 4 x π x 12.1 m

= 1368.5 m3

*L and LL level is finalized by vendor's information of Auxiliary Absorbent tank pump and agitator.

P.S. CHOWDHURY
Addl. General Manager (PE - TF & R&M)
NTPC Limited
(A Government of India Enterprise)
Engineering Office Complex
A-8A, Sector-24, NOIDA-201301 (U.P.)

S. No	Item No	Service	Design Spec	Process Parameter	Design Basis
7	10/50HTT 00BB001	Absorber Area Drain Sump	4000mmW X 4000mmL X 4000mmH Quantity = 5 nos. for five absorber Units	Process Capacity for each Sump	25 m3
				Retention Time	Batch Operation
				Required volume	25 m3

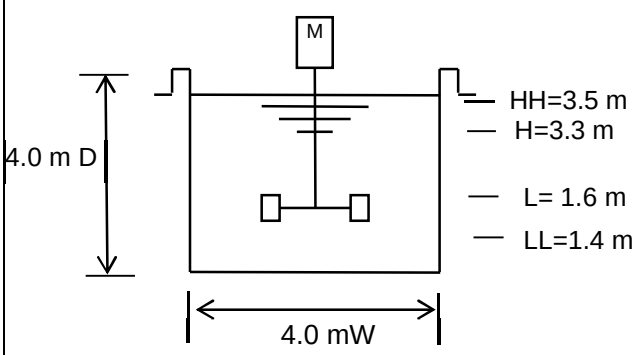

Tank Level is designated as follows

Top	4.0
HH	3.5
H	3.3
L	1.6*
LL	1.4*

<u>Rectangular Tank</u>

Effective volume

= 4.0 m x 4.0 m x (3.3-1.6) m

= 27.2 m3 >25 m3

Hold Volume

= 4.0 m x 4.0 m x 3.5 m = 56 m3

*L and LL level is finalized by vendor's information of Sump pump and agitator.

Why all sumps capacity are of 25 m3.

NTPC
A Maharatna Company
Mob. : 9650992617
P.S. CHOWDHURY
Addl. General Manager (PE - TF & R&M)
NTPC Limited
(A Government of India Enterprise)
Engineering Office Complex
A-8A, Sector-24, NOIDA-201301 (U.P.)
E-mail : pschowdhury@ntpc.co.in

S. No	Item No	Service	Design Spec	Process Parameter	Design Basis
8	00HTT01 BB001	Gypsum Area Drain Sump	4000mmW X 4000mmL X 4000mmH Quantity = 1 no. (Common for all units)	Process Capacity	25 m3
				Retention Time	Batch Operation
				Required volume	25 m3

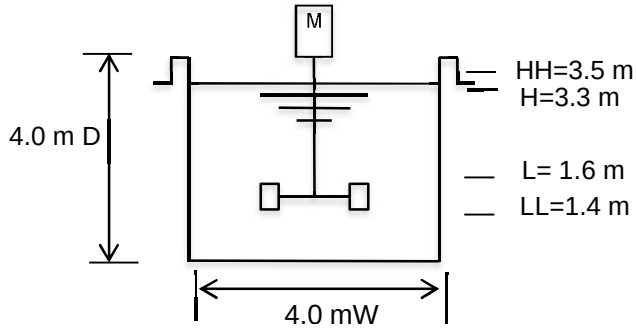

Tank Level is designated as follows

Top	4.0
HH	3.5
H	3.3
L	1.6*
LL	1.4*

<u>Rectangular Tank</u>

Effective volume

= 4.0 m x 4.0 m x (3.3-1.6) m

= 27.2 m3 >25 m3

Hold Volume

= 4.0 m x 4.0 m x 3.5 m = 56 m3

*L and LL level is finalized by vendor's information of Sump pump and agitator.

NTPC
A Maharatna Company
Mob. : 9650992617
P.S. CHOWDHURY
Addl. General Manager (PE - TF & R&M)
NTPC Limited
(A Government of India Enterprise)
Engineering Office Complex
A-8A, Sector-24, NOIDA-201301 (U.P.)
E-mail : pschowdhury@ntpc.co.in

S. No	Item No	Service	Design Spec	Process Parameter	Design Basis
9	00HTT02 BB001	Lime Stone Area Drain Sump	4000mmW X 4000mmL X 4000mmH Quantity = 1 no.(Common for all units)	Process Capacity	25 m3
				Retention Time	Batch Operation
				Required volume	25 m3
	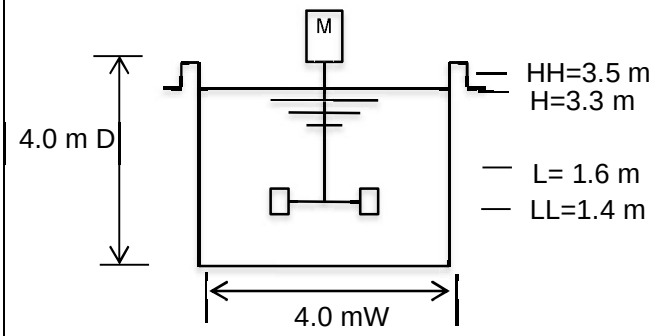				Tank Level is designated as follows Top 4.0 HH 3.5 H 3.3 L 1.6* LL 1.4* **<u>Rectangular Tank</u>** **Effective volume** = 4.0 m x 4.0 m x (3.3-1.6) m = 27.2 m3 >25 m3 **Hold Volume** = 4.0 m x 4.0 m x 3.5 m = 56 m3

*L and LL level is finalized by vendor's information of Sump pump and agitator.

NTPC
A Maharatna Company
Mob. : 9650992617
P.S. CHOWDHURY
Addl. General Manager (PE - TF & R&M)
NTPC Limited
(A Government of India Enterprise)
Engineering Office Complex
A-8A, Sector-24, NOIDA-201 301 (U.P.)
E-mail : pschowdhury@ntpc.co.in

S. No	Item No	Service	Design Spec	Process Parameter	Design Basis
10	00HTQ00BB001/002	Process Water Tank	6500 mmD X 7100 mmH Quantity = 2 nos. (common for all the units)	Process Capacity	568.335 m3/h (<801> + <802> + <803> + <804> + <805>/2 + <806>) x 5 units)
				Retention Time	0.25 hr
				Required volume	568.335 m3/h x 0.25 hr = 142.1 m3

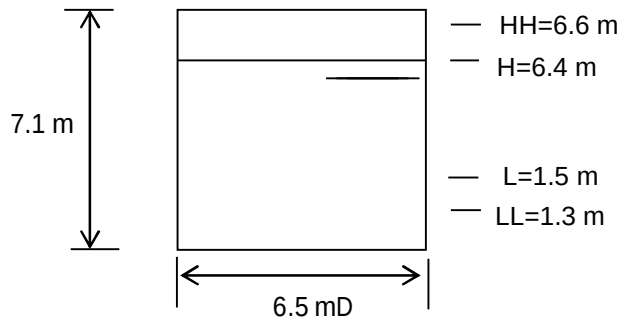

Tank Level is designated as follows

Top	7.1
HH	6.6
H	6.4
L	1.5
LL	1.3*

Effective volume

= 6.5 m Φ ^ 2 / 4 x π x (6.4-1.5) m

= 162.6 m3>142.1 m3

Hold Volume

= 6.5 m Φ ^ 2 / 4 x π x 6.6 m

= 219 m3

* LL level will be finalized by vendor's information of Process water pump.

please provide calculation for process water tank capacity

P.S. CHOWDHURY
Addl. General Manager (PE - TF & R&M)
NTPC Limited
(A Government of India Enterprise)
Engineering Office Complex
E-mail : pschowdhury@ntpc.co.in

S. No	Item No	Service	Design Spec	Process Parameter	Design Basis
11	00HTQ01BB001/002	Cake wash (Clarified water) Tank	3500 mmD X 3850 mmH Quantity = 2 nos.	Process Capacity for each tank	16.995 m3/h wt is the basis?? stream no. (<[illegible]>/2 for 5 absorbers).
				Retention Time	1hr
				Required volume	16.995 m3/h x 1hr = 16.995 m3

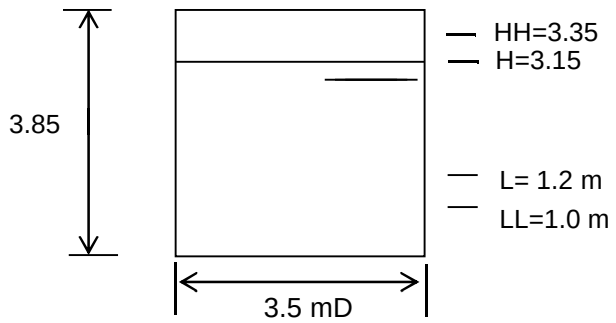

Tank Level is designated as follows

Top	3.85
HH	3.35
H	3.15
L	1.2
LL	1.0*

Effective volume

= 3.5 m Φ ^ 2 / 4 x π x (3.15-1.2) m

=18.76 m3 > 16.995 m3

Hold Volume

= 3.5 m Φ ^ 2 / 4 x π x 3.35 m

= 32.23 m3

*LL level is finalized by vendor's information of Cake wash tank pump.

Please provide calculation for cake wash tank capacity.

NTPC
A Maharatna Company
Mob.: 9650992617
P.S. CHOWDHURY
Addl. General Manager (PE - TF & R&M)
NTPC Limited
(A Government of India Enterprise)
Engineering Office Complex
A-8A, Sector-24, NOIDA-201301 (U.P.)
E-mail : pschowdhury@ntpc.co.in

wt is the basis??

S. No	Item No	Service	Design Spec	Process Parameter	Design Basis
12	00HTM01B B001/002	Belt Filter Wash Tank	3500 mmD X 3850 mmH Quantity = 2 nos.	Process Capacity for each tank	16.995 m3/h stream no. (<80%/2 for 5 absorbers).
				Retention Time	1hr
				Required volume	16.995 m3/h x 1hr = 16.995 m3

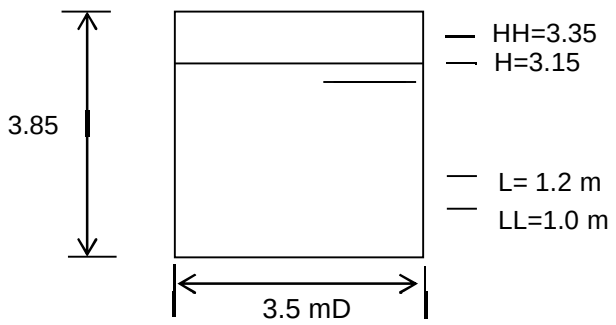

Tank Level is designated as follows

Top	3.85
HH	3.35
H	3.15
L	1.2
LL	1.0*

Effective volume

= 3.5 m Φ ^ 2 / 4 x π x (3.15-1.2) m

=18.76 m3 > 16.991 m3

Hold Volume

= 3.5 m Φ ^ 2 / 4 x π x 3.35 m

= 32.23 m3

*LL level is finalized by vendor's information of belt filter wash tank pump.

Reference Documents

Mass Flow Balance - 4200-109-RPT-PVM-W-035

SECTION-I, SUB-SECTION- D

ANNEXURE-IV

MASTER DRAWING LIST WITH SCHEDULE OF SUBMISSION

	TITLE: 4X210MW+3X500 MW KAHALGAON STPP TECHNICAL SPECIFICATIONS FOR MISCELLANEOUS FGD TANKS	SPEC. NO.: PE-TS-481-167-A101
		SECTION-I, SUB-SECTION- D,
		ANNEXURE-IV
		REV. NO.: 00
		DATE:

DRAWINGS/ DOCUMENTS REQUIRED DURING DETAIL ENGINEERING

The successful bidder shall submit the following drawings / documents during detail engineering for approval / information / reference (as the case may be): -

Sl. No.	BHEL Drawing / Document No.	Title	Schedule Submission Date from LOI	Resubmission after incorporating comments
1	PE-V0-481-167-A001	FABRICATION DRAWING OF MISC. FGD TANK	5 weeks	Within 1 week
2	PE-V0-481-167-A002	DESIGN CALCULATION OF MISC. FGD TANKS INCLUDING ROOF STRUCTURE WITH STAAD CALCULATION	3 weeks	Within 1 week
3	PE-V0-481-167-A003	GA DRAWING OF MISC. FGD TANKS	4 weeks	Within 1 week
4	PE-V0-481-167-A004	DATASHEET & GA DRAWING OF RUBBER LINING & VINYL ESTER GLASS FLAKE FOR MISC. FGD TANKS	6 weeks	Within 1 week
5	PE-V0-481-167-A005	DATASHEET & GA DRAWING OF COMPONENTS FOR MISC. FGD TANKS	6 weeks	Within 1 week
6	PE-V0-481-167-A006	QAP OF RUBBER LINING & VINYL ESTER GLASS FLAKE FOR MISC. FGD TANKS	6 weeks	Within 1 week
7	PE-V0-481-167-A007	QAP OF COMPONENTS FOR MISC. FGD TANKS	6 weeks	Within 1 week
8	PE-V0-481-167-A008	SUB VENDOR LIST WITH INSPECTION CATEGORY FOR MISC. FGD TANKS	3 weeks	Within 1 week
9	PE-V0-481-167-A009	SURFACE PREPARATION AND LINING PROCEDURES FOR MISC. FGD TANKS	7 weeks	Within 1 week
10	PE-V0-481-167-A010	O&M MANUAL FOR RUBBER LINING & VINYL ESTER GLASS FLAKE	8 weeks	Within 1 week
11	PE-V0-481-167-A011	O&M MANUAL FOR MISC. FGD TANKS	8 weeks	Within 1 week

	TITLE: **4X210MW+3X500 MW KAHALGAON STPP TECHNICAL SPECIFICATIONS FOR MISCELLANEOUS FGD TANKS**	SPEC. NO.: PE-TS-481-167-A101
		SECTION-I, SUB-SECTION- D,
		ANNEXURE-IV
		REV. NO.: 00
		DATE:

NOTE: Drwg/ Document shall be uploaded by the successful bidder on WRENCH /DMS.Procedure for the same will be informed after award of contract.

COMPANY SEAL

SIGNATURE: _____

NAME: _____

DESIGNATION: _____

COMPANY: _____

DATE: _____

SECTION-I, SUB-SECTION- D

PACKING PROCEDURE

DOMESTIC PACKING

COMMON GUIDELINES

1 GENERAL:

This standard lays down packing instructions for domestic packing of Components/ Assemblies/ Equipment to be despatched against Customer's contracts, for which there are no special instructions issued by the Engineering Departments. For Seaworthy Packing refer standard AA0490004 wherever applicable.

The Components/Assemblies need to be packed suitably to avoid physical damage & corrosion during transit & storage. For specific applications the concerned engineering department shall issue a product standard. Reference of this product standard, must appear in the Shipping list/Packing List.

2 SCOPE:

This procedure gives minimum guidelines to be complied with for domestic packing of Components /Assemblies/ Equipment. This domestic packing shall be suitable for different handling operations and for the adverse conditions during transportation and during indoor / outdoor storage of materials.

3 WOOD SPECIFICATION

Based on availability, the wood shall conform to specification AA51401 or AA51402.

4 TYPES OF PACKING:

The following 5 types of packing have been standardized for packing of General Components/ Assemblies.

1) '**OP**' - Open Type.
2) **'PP**' - Partially Packed.
3) '**CP**' – Crate/Box Packing - Components/Equipment requiring physical protection.
4) '**CQ**' - Case Packing – Machined components-Small & Medium Components/ Assemblies/ Equipment which require corrosion & physical protection.
5) '**CR**' - Case Packing – Electrical/Electronic Components/ Assemblies, which require special packing viz. Water Proof, Shock Proof etc…

5 DESCRIPTION OF TYPES OF PACKING:

The various types of packing, as standardized above, are described below.

5.1 'OP' - Open Type

In case, of components which are not affected by water & dust and do not require special protection, are generally not machined, shall be sent as open packages. However, these components may be sent in crates, wherever necessary.

5.2 'PP' - Partially Packed

Components which need special protection at selected portions only shall be despatched partially packed. Machined surfaces should not be allowed to come directly in contact with the wood. Such surfaces should be protected with 100GSM(Colourless) Multi Layered Cross Laminated Polyethylene

Film to Specification No. AA51420. All sharp corners and edges shall be protected by rubber mats to prevent damage to the polyethylene film

5.3 'CP' - Crate Packing

Assemblies/Components which need only physical protection from the point of view of handling shall be despatched duly packed in crates.

5.4 'CQ' - Case Packing - Machined Components/Assemblies/Equipment

Small and medium sized components/assemblies/equipment due to size/weight and to avoid handling and pilferage problems shall be packed in Case/Containers. Wherever required adequate quantity of silica gel to AA55619 or VCI Powder/Tablets, packed in thin muslin cloth cotton bags shall be suitably placed. Small machines/components of less weight shall be provided with suitable cushioning by Rubberised coir. The components inside the case shall be entirely covered with 100GSM(Colourless) Multi Layered Cross Laminated Polyethylene Film Specification No. AA51420, wherever required. This may be prescribed for electronic parts/critical machined components/surfaces.

For mechanical product like valves where motors are separately securely wrapped in polyethylene, the requirement of individual component wrapping shall be exempted.

5.5 'CR' - Case Packing - Electrical & Electronic Components/Assemblies

Delicate components likely to be damaged e.g. Gauges, Instruments etc. are to be wrapped in waxed paper or polyethylene air bubble film and packed in cartons. Adequate quantity of Silica gel to AA55619 packed in cotton bags of 100grams each are to be suitably placed in the cartons. The cartons shall be entirely covered with 100GSM(Colourless) Multi Layered Cross Laminated Polyethylene Film Specification No. AA51420 before being packed in the cases. VCI Powder/Tablets can be used as an alternative to Silica Gel to AA55619.

Empty space in the cartons shall be filled with rubberized coir to get proper cushioning effect. The cartons shall be manufactured from corrugated Fiber Board, meeting requirements of AA51414.

6 PREPARATION OF PACKING CASES

6.1 DIMENSIONS:

a) Thickness of planks for Front, rear, top and bottom sides and binding, jointing battens shall be 25/20mm +2/-3 mm as per applicable drawings of the respective units.

b) Width of all planks including the tongue shall be more than 125mm and after plaining it shall be minimum 100mm.

c) Minimum number of planks shall be used for a shook.

d) Horizontal, vertical, diagonal planks shall be given for binding (number of such planks depend on the dimension of panel.

e) Width of binding planks shall be minimum 100mm.

f) Distance between any 2 binding planks shall be less than 750mm.

g) diagonal planks shall be used in between vertical binding planks when distance between inner to inner of vertical planks is more than 750mm

h) Distance of the outer edges of these planks from the edge of case shall be less than 250mm.

i) Diagonal planks are not required for top planks and width side, if the width of pallet is less than 750mm.

6.2 JOINTING OF PLANKS

Single length planks shall be used for cubicles whose overall length is less than 2400mm. For cubicles of length more than 2400mm, jointing is permitted. The jointing shall be done with one single or maximum of 2 planks of wood same as other planks of width 250 mm (minimum) with two rows of nails on either side of the joint in zigzag manner. From the joint along height side, it shall be of lap joint with overlap of at least the width of plank.

6.3 TONGUE AND GROOVE JOINTS

Two consecutive planks shall be joined by tongue and groove joint. Depth of tongue shall be 12+1 mm, thickness of tongue shall be 8 +1 mm. The groove dimensions shall be such that the tongue fits tightly into the groove to make a good joint. This type of joint can be done based on the product requirement wherever required.

6.4 PERMISSIBLE DEFECTS

Wood shall be free from knots, bows, visible sign of infection and any kind of decay caused by insects, fungus, etc.

End splits: Longest end splits at each end shall be measured and lengths added together. The added length shall not exceed 60mm per meter run of shook's. Wood pins shall be used to prevent further development of split.

Surface cracks: Surface cracks with a maximum depth of 3mm are permissible. A continuous crack of any depth all along the length is not allowed.

6.5 OTHER MATERIALS

6.5.1 NAILS

The dia. of the nails shall be 3.15mm. The length of the nails shall be 65mm wherever two planks of 25mm thickness are joined and 75mm wherever a 25mm planks is joined to a 50mm plank.

6.5.2 BLUE NAILS

These are used for nailing bituminized Kraft paper/hessian cloth to the planks. The length of the nails shall be 16mm.

6.5.3 HOOP IRON STRIPS

These are used for strapping the boxes. The width of the strips shall be 19+1mm and thickness 0.6+0.01mm. The material shall be free from rust.If sufficient nailing is done for bigger boxes, strapping need not be done.

6.5.4 CLIPS

These shall be used for strapping the hoop iron strips on the boxes.

6.5.5 BRACKETS

These brackets are used for nailing to the corners of cubicle boxes. The brackets shall be of mild steel of thickness min 2mm and width 25+1mm. The brackets shall be of "L" shape, the length of each side being 100+2mm. Two holes shall be provided towards the end of each side for screwing /nailing.

6.5.6 FASTENERS

Bolts, double nuts, spring washers will have to be used for packing of some special items like transformers, reactors, breakers, etc., to hold the job to the bottom plank of the box. The bolts, nuts, washers will be provided by the vendor. Drilling of holes will have to be done using contractor's tools.

6.5.7 MULTI LAYERED CROSS LAMINATED POLYTHELENE FILM

100GSM (Colourless) Multi Layered Cross Laminated Polythelene Film Specification No: AA51420 are used to make covers to the jobs individually. The cross lamination gives qualities of extra toughness, together with flexibility and lightness coupled with good weather resistance to ultra violet rays.

6.5.8 RUBBERISED COIR:

The rubberized coir is used as cushioning material. For the packing of loose items, items are to be arrested by using rubberized coir. For the packing of cubicles rubberized coir of thickness 25mm and width 75mm shall be used.

6.5.9 FOAM RUBBER / 'U' FOAM:

This is used for covering the delicate items. This material is provided by the vendor.

6.5.10 MARKING PLATE:

This shall be of anodized aluminium sheet. Size of the marking plate shall be maintained minimum of size as per the details specified in the Figure 4.

6.5.11 PACKING SLIP HOLDER:

This shall be of galvanized iron tinned sheet /Aluminium sheet

6.5.12 SILICA GEL:

This shall be of indicating type to conform to IS: 3401/AA55619.Silical gel shall be used for such products only where moisture needs to be avoided.

6.5.13 COTTON BAGS:

These are used for holding silica gel. The bags shall have the following matter indicated on them:

BHEL-UNIT NAME	PLACE-PINCODE
SILICA GEL	INDICATING TYPE
BLUE :	ACTIVE
ROSE :	REDUCED ACTIVITY
WHITE :	NO ACTIVITY. TO BE REPLACED WITH FRESH SILICA GEL

6.5.14 COTTON/ PLASTIC TAPE:

This is used for tying small items. And also to prevent vibrations of moving parts within the cubicles.

6.5.15 MARKING INK:

The ink used normally is black in color. In some special cases other color also will have to be used. The ink shall be non-fading/indelible and non-washable by water.

6.5.16 POLYETHYLENE BAGS:

These are to be used for keeping the Packing slips. The bag shall be of size 70mm X 100mm (minimum).

6.5.17 Hessian cloth, twine thread, paint will have to be used in packing certain items.

6.5.18 Mechanical Latching clamps:

For CLW Railway panels and similar Panels self-locking clamps can also be used on need basis in conjunction with or apart from regular bolt and nut fixing arrangement. For reusable boxes, these clamps provide easy locking and unlocking arrangement. These clamps will be made available from BHEL in some cases.

6.5.19 STICKERS

The following stickers to be put by the vendor on cubicles/Boxes after packing.

1) Case No sticker: 2 nos. Size 25.Cm x 0.45Cm
2) BHEL Monogram sticker: 1 no. Size 1.75Cm x 2.3Cm
3) Address sticker: 2 nos. Size 3.8Cm x 3.0Cm
4) Direction sticker “Front” & “Back” - 4 nos. Size 2.0Cm x 0.75Cm
5) Chain Mark Sticker: 4 Nos. Size – 3.0Cm x 0.75Cm
6) "Fragile” sticker: 2 Nos. Size. 2.1Cm x 1.5Cm
7) "DO NOT STACK” sticker - 2 Nos. Size 3.0Cm x 2.2Cm

In place of stickers, writing all the details legibly with paint shall be allowed & respective units may take decision accordingly.

7 PACKING OF CUBICLES:

7.1 The packing is to be done as per clause 5 in all respects.

7.2 The cubicles are already fixed on wooden pallets. Hence the contractor need not arrange the bottom pallets normally.

7.3 The cubicles will be of different sizes both width wise and lengthwise. The cubicles may be made up of single suite, 2 Suite, 3 Suite, 4 Suite, etc., The width of the cubicles generally varies from 400 mm to 1650mm.The length of the cubicle, generally varies from 1500 mm to 4800 mm. The height is normally 2430 mm. In some cases, the height may be less/more.

7.4 MULTI LAYER CROSS LAMINATED POLY FILM

The inner surface of 4 sides of shook's shall be nailed with Multi-layer cross laminated poly film (as per 6.5.7) using blue nails (as per 6.5.2) wherever 2 pieces of Cross laminated poly film are used, the joint shall have an overlap of minimum 20mm.

The inner surface of top cover shall be nailed with Multi-layer cross laminated poly film (as per 6.5.7). This sheet shall project outside on 4 sides by at least 100mm and shall be nailed properly on sides. Joining of sheets should have overlap of minimum 20mm.

The cubicles shall be covered with Multi-layer cross laminated poly film (as per 6.5.7).

7.5 SILICA GEL:

Silica gel (as per 6.5.12) packed in cotton bags shall be kept at different places inside the cubicle as per BHEL-Unit directions. Each suit of cubicle shall be provided with 1 kg of Silica gel (for a 4 suit cubicle 4 kgs of Silica Gel to be used. The bag containing silica gel to be as per 6.5.13).

7.6 LOOSE PARTS:

Any loose parts in the cubicles shall be tied using cotton/ plastic tape. Wooden battens shall be provided wherever necessary.

7.7 WOODEN BATTENS:

In case of cubicle which are not rectangular in shape like control desks, sufficient number of wooden rafters/battens of proper size shall be provided to give strength to the package.

7.8 RUBBERISED COIR:

Gap between the cubicle and the case shall be filled with rubberized coir (as per 6.5.8) with distance between consecutive layers less than 500mm.

7.9 CLAMPING:

Packing shall be bound at edges by nailing M.S. Clamps / Brackets (as per 6.5.5). Each vertical edge shall have minimum 3 clamps. Top horizontal edges will have one clamp for every meter length of package. However, minimum 4 clamps shall be nailed at the top for any cubicle.

7.10 PACKING SLIP:

Packing slip kept in the polyethylene bag (As per 6.5.16) shall be placed in the box at appropriate place. In addition, one more packing slip covered in polyethylene cover and packing slip holder (as per 6.5.11) shall be nailed to front / rear of case.

7.11 MARKING PLATE:

One no. (As per 6.5.10) shall be nailed to the front side of the case.

7.12 CASE MOUNTING:

After complete packing, stencil marking of various details and marking of symbols shall be done as per BHEL instructions using indelible / non washable marking ink.

7.13 Different types (Typical) of Cubicles with sizes for Packing

1. Single suite cubicle - 900 x 950 x2500
2. Two suite cubicle - 1650 x 950 x 2500
3. Three suite cubicle - 2400 x 950 x2500
4. Four suite cubicle - 3150 x 950 x 2500
5. Regulation cub - 1300 x 1350 x 2500
6. Thy cub - 2870 x 1350 x 2500
7. VFD Cub - 3800 x 1550 x 2500

7.14 PACKING OF CUBICLES FOR EXPORT

Refer Corporate Standard AA0490009.

8 PACKING OF LOOSE ITEMS/SPARES

1) Shape of cases shall be square, rectangular with single gabled roof or with double gabled roof depending on the nature of the job to be packed. Construction shall be as per drawings enclosed. Only gable will be additional as required.
2) Wood shall conform to specification AA51401 or AA51402 with Tongue and Groove joint as per clause 6.3.
3) Width of planks shall be at least 100 mm. Width of binding planks (battens) shall be at least 75mm.
4) External surface of planks on front and rear shall be plane 100% (except bottom plank).
5) Inner surfaces of all 6 sides shall be lined with Multi Layered Cross Laminated Polythelene Film (as per clause 6.5.7) using blue nails.
6) Rubberized coir of minimum 25mm thickness and 100 mm width shall be nailed to inner surfaces of bottom and 4 sides of box.
7) Internal packing: Items that go into the box shall be packed using 100GSM, (Colourless) Multi Layered Cross Laminated Polyethylene Film Specification No: AA51420. Any space left between the job and the sides and the top of the box shall be filled with rubberized coir to get proper cushioning effect.
8) Certain items like transformers, reactors, breakers, etc., shall be bolted to the bottom of the box using bolts, nuts and washers.
9) Silica gel as per clause 6.5.12 held in cotton bags as per clause 6.5.13 shall be kept at proper places in the box.
10) Packing slip kept in polyethylene bag (clause 6.5.16) shall be placed in the box.
11) Marking plate as per clause 6.5.10 shall be nailed to side of the box.
12) Two numbers of hoop iron strips as per clause 6.5.3 shall be strapped tightly on the case using clips.
13) Stencil marking of various details and marking of various symbols shall be done as per BHEL instructions using indelible/non-washable marking ink.
14) Loose items to be kept inside the cubicle

- The components which are removed from cubicle for shipping purpose only, such as meters shall be kept inside the cubicle individually, kept in wooden box and tied firmly in bottom of Cubicle.

- Other items which are given loose in addition to cubicle shall be packed in separate boxes.

9 BOX SIZES

9.1 BOX SIZES

Table 1 – SPARES WOODEN BOX DETAILS

SNO	BOX TYPE	BOX SIZE (in mm)	BOX Wt (in KG)	Carrying Capacity
1	A	800 X 200 X 200	15	
2	B	1500 X 200 X 200	22	
3	C	2000 X 200 X 200	27	
4	D	1100 X 200 X 200	15	
5	E	200 X 200 X 200	5	
6	F	320 X 250 X 260	13	
7	G	320 X 250 X 430	16	
8	H	430 X 370 X 430	23	
9	I	1100 X 400 X 400	45	
10	J	1500 X 500 X 400	65	
11	K	2000 X 500 X 400	93	
12	L	2500 X 500 X 400	88	
13	M	900 X 600 X 600	100	
14	N	3000 X 400 X 400	60	
15	P	600 X 500 X 400	35	
16	Q	710 X 630 X 600	90	
17	R	850 X 630 X 670	102	
18	S	1000 X 770 X 670	140	
19	T	2500 X 850 X 800	180	
20	U	1500 X 700 X 700	120	
21	W	1200X900X600	120	
22	Y	450 X 200 X 200	10	

Table 2 – WOODEN BOX DETAILS

BOX TYPE	BOX SIZE (in MM)	BOX Wt (in KG)	Carrying Capacity
1	320X250X260	10	
2	320X250X430	15	
3	430X370X430	25	
4	670X670X470	65	
5	720X630X600	75	
6	1000X770X660	100	
7	1100X430X670	80	
8	1200X1200X900	80	
9	1300X770X1050	155	
10	2500X850X800	225	
11	2000X1500X1200	305	
12	1850X1050X1250	260	
13	2000X800X800	180	
14	2600X1500X1600	470	
15	250X250X600	20	
16	250X250X880	30	
17	300X300X700	25	
18	380X380X880	45	
19	510X510X1400	60	
20	570X570X1400	80	
21	575X575X1875	105	
22	3600X1100X1100	390	
23	900X500X800	110	
24	2000X950X740	225	
25	1600X1120X700	220	
26	2500X2000X1200	490	
27	2900X1900X1400	525	
28	3000X1000X900	370	
29	3200X2200X950	450	
30	2150X1100X750	325	
31	2000X2000X700	130	
32	700X1200X1325	130	

Table 3 – STEEL BOXES

SL NO	TYPE	DIMENSION IN MM			WEIGHT	CARRYING CAPACITY (KGS)
		LENGTH	BREADTH	HEIGHT		
1	I	2480	1680	1500	339	4500
2	II	1200	900	600	061	2000
3	IIB	1800	850	950	115	2500
4	III	900	600	600	029	1000
5	IV	600	450	500	019	750
6	V	400	350	300	011	500

TYPICAL PATTERN OF WOODEN BOX

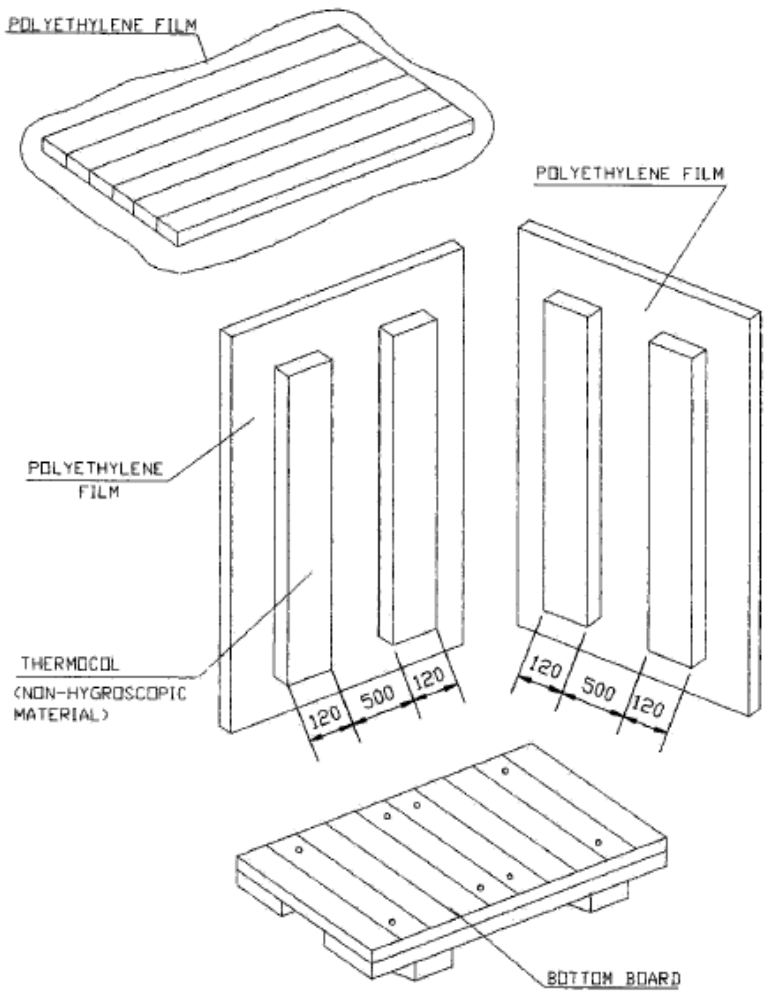

Figure 1

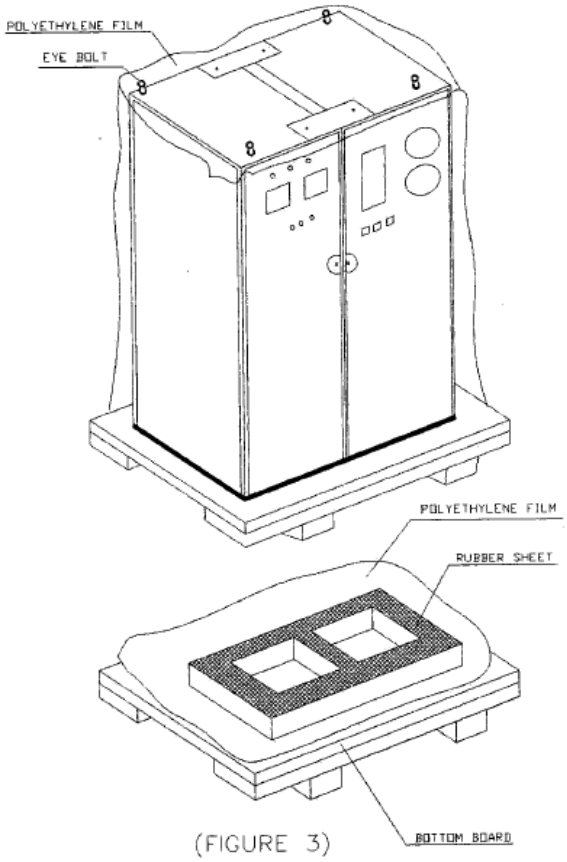

Figure 2

9.2 STEEL CONTAINERS:

Steel containers for packing can be used in case of repeated supplies of the same equipment. Empty steel containers are to be returned back from customer's end and to be reused for the next supplies. The containers are to be made of structural steel as per AA10108 with proper reinforcement with I, C and T Sections. Depends on the availability of resources & requirements units may be allowed to use standard cargo containers also instead of fabricated steel boxes.

a) Following precautions are to be taken during packing: -

b) Put the machine in the steel container properly,

c) Cover the machine with polythene.

d) To arrest the movement in the steel container necessary wooden Blocks/Battons may be put.

e) Put cover on steel, container and Bolt Properly

9.3 SEALED PACKING:

Components sub-assemblies and assemblies sensitive to climatic conditions shall be packed seal tight. All the openings of the sensitive components, sub-assemblies and assemblies shall be blanketed to prevent the ingress of dust and moisture. The components sub-assemblies and assemblies are completely covered with 2 layers of polyethylene sheet. All sharp corners and edges are to be protected by rubber mats to prevent the polyethylene sheet from damage. Top surface of the case shall be free from dents to prevent rain water pockets.

10 MARKINGS/STENCILINGS

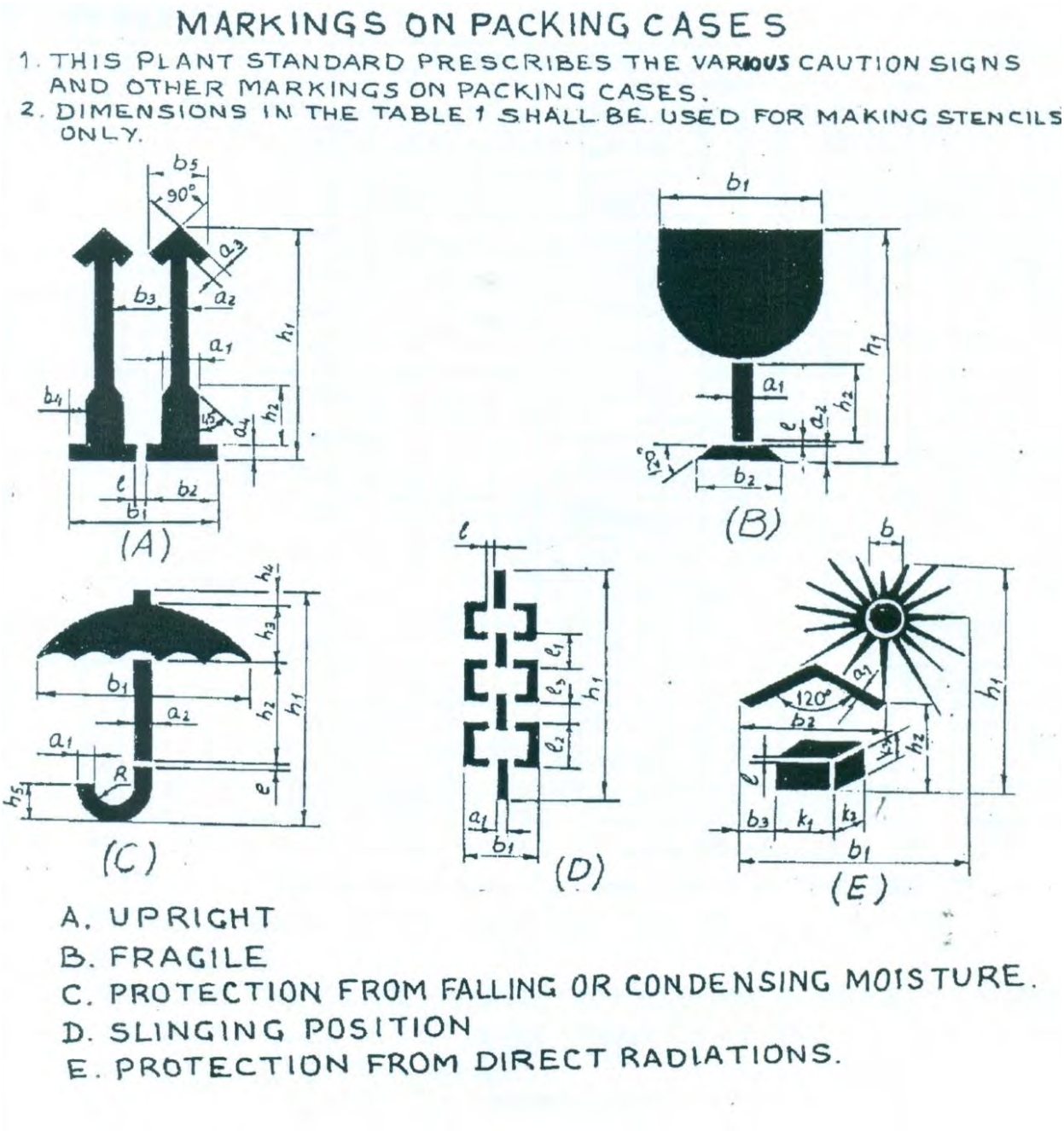

Center of Gravity

Figure 3

DESIGN-ATION		DIMENSION IN MM																						
		a1	a2	a3	a4	b1	b2	b3	b4	b5	b	l	h1	h2	h3	h4	h5	k1	k2	k3	l1	l2	l3	R
A	1	12	5	5	4	52	25	19	8	21		2	84	23										
	2	17	7	7	6	75	36	29	11	30		3	119	33										
	3	24	10	10	8	104	50	38	16	42		4	168	46										
	4	34	14	14	11	147	71	59	23	60		5	239	65										
B	1	5	5			50	33					2	84	25										
	2	7	7			71	47					3	119	36										
	3	10	10			100	66					4	168	50										
	4	14	14			142	94					5	239	71										
C	1	4	3			66						2	80	39	19	5	11							6
	2	6	4			85						3	114	55	27	7	16							9
	3	8	6			120						4	160	78	38	10	22							12
	4	11	9			170						5	227	110	54	14	31							17
D	1	6				30						4	148								30	30	10	
	2	9				42						5	209								42	42	14	
E	1	3				69	47	10			16	2	91	26				17	8	11				
	2	4				98	67	15			23	3	128	33				24	11	16				
	3	6				138	94	20			32	4	182	62				34	16	22				

Table 4

Black and Red Marking Ink to IS:1234 "Ink, Stencil, Oil Base, For Marking Porous Surfaces" or duplicating ink stencilling, oil base for marking porous surfaces.

All cases containing fragile items are to be stencilled with red marking and stencilling paint/ink

"HANDLE WITH CARE", "FRAGILE DO NOT TURN OVER".

Besides the caution signs the product information's shall be stencilled of letters with 13mm to 50mm height.

In case of consignment consists of more than one package, each package shall carry its package no as given in shipping list. All caution signs shall be stencilled in high quality full glossy out door finishing paint red in colour (AA56126). All other markings shall be carried out in black enamel(AA56126).

Caution signs & other markings shall be stencilled on both the end shooks & the side shooks.

Caution sign (for slinging) shall be stencilled only on side shooks at the appropriate place.

Note: Incase the size of package is small for using the stencils, then hand written letters/figures shall be allowed.

	BHEL – <unit> - <location> - <pin>				
CONSIGNEE					
MATERIAL					
CUSTOMER REF.				MO. NO.	
DESPATCH ADVICE NOTE NO				CASE NO	
DIMENSIONS(MM) L x B x H				NET WT –KGS	GROSS WT –KGS
SPECIAL INSTRUCTIONS	HANDLE WITH CARE - KEEP DRY DO NOT DROP - DO NOT TILT				

Figure 4 – TYPICAL MARKING PLATE (225 X 170)

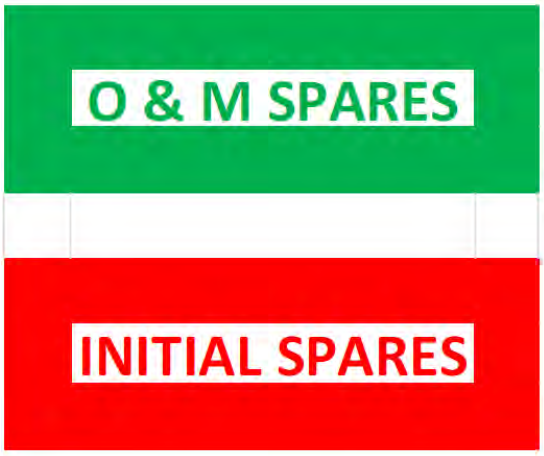

Figure 5

Easy spares [Initial and O&M] Traceability and Identification at units and as well as at sites:

11 RECYCLING OF INCOMING WOODEN PACKING CASES

OBJECTIVES

– To utilize useable wood of incoming packing cases, for manufacturing of new packing boxes.
– To recycle incoming wooden packing cases, as such, wherever possible.

1) All incoming wooden packing cases received from suppliers /customers will be opened carefully, with the intention of reusing them, by Shop.
2) After carefully taking out the contents, the empty wooden packing cases will be shifted by Shop to the specified locations i.e. bin / nearly spaces, already earmarked in stores.
3) Material shifting contractor engaged by store, will collect all such wooden packing cases and scrap wood from specified points, on a regular basis.
4) After collecting / loading the empty packing cases/ scrap wood, contractor will take the carrier first to Weighment Bridge for weighment, thereafter; he will go to Carpentry, where Carpentry representative will identify the packing cases which can be used by Carpentry for manufacturing of New Packing Boxes. All such identified packing boxes will be unloaded and handed over to Carpentry by contractor.
5) These packing boxes will be made re-useable after necessary rectification and additional work.
6) Contractor will again take the carrier for weighment and this second reading will also be recorded on the same “Weighment Slip”.
7) Weight of empty packing cases / scrap wood taken will be calculated on the basis of 1st and 2nd weighment readings recorded on the “Weighment Slip”. A copy of“Weighment Slip” (where both the weighment readings are recorded) will be given by the contractor to the carpentry representative. Based on this “Weighment Slip”, carpentry will maintain a register in which details of quantity received will be recorded.
8) All “Weighment Slips” will invariably be signed by carpentry representative (even when no boxes have been unloaded by carpentry). Store will accept the scrap wood only if “Weighment Slips” are signed by carpentry representative.
9) Balance empty packing cases / scrap wood will be handed over by contractor to Store, for storing in scrap yard.
10) A separate area in Scrap yard will be provided, for executing the work of denailing of wooden packing cases, under supervision of carpentry.
11) Carpentry contractor will identify packing cases / scrap wood for denailing, which will behanded over to him by Store, at Scrap yard, for denailing and further operation.
12) Quality and Carpentry will jointly inspect the wood generated by de-nailing process and will prepare “INSPECTION CUM RECEIPT REPORT OF USEABLE WOOD RECEIVED FROM TPS – STORE BY CARPENTRY”.
13) After acceptance of the wood by Quality and Carpentry, the same will be shifted to carpentry for receipt and its record will be maintained by carpentry.
14) This will be a Permanent Productivity Project executed by carpentry. “Productivity Savings “duly verified at the current Purchase Order rate of wood, will be sent every month to Resource Management Department, for highlighting it in their monthly progress report.

12 STANDARD METHOD OF PACKING

Table 5 - Standard Method of Packing

DESCRIPTION	CASE	CRATE	SKID	BUNDLE	BARE	DRUM	METAL DRUM	FIBRE DRUM
PRESSUE VESSELS								
TOWERS					O			
TANKS					O			
VESSELS					O			
GASKETS	O							
FASTENERS	O							
COVERS		O						
EXCHANGERS								

DESCRIPTION	CASE	CRATE	SKID	BUNDLE	BARE	DRUM	METAL DRUM	FIBRE DRUM
HEAT EXCHANGERS					O			
TUBE BUNDLE	O							
SHELL					O			
AIR FIN COOLERS					O			
COLOUMNS, MOTOR SUSPENSIONS, PLENUM CHAMBERS, SCREEN GUARDS, ETC					O			
BEARING BLOCKS	O							
FANS	O	O						
MOTORS	O							
GASKETS	O							
FASTENERS	O							
TEST FLANGES			O					
TEST RINGS			O					
COVERS			O					
CRYOGENIC VESSELS								
COLD CONVERTERS					O			
HORIZONTAL STORAGE TANKS					O			
TRANSPORTATION TANK					O			
COLD BOX					O			
DRYING UNIT					O			
DRYING BOTTLES					O			
MOISTURE SEPARATORS					O			
SILENCERS					O			
ONGC SKIDS					O			
VAPORISER		O						
SPECIAL PRODUCTS								
SI/VI PIPING		O						
CRO BIO CONTAINERS	O							
AIR BOTTLES	O							
TITANIUM BOTTLE	O							
WAR HEAD CONTAINER	O							
MISSILE CONTAINER	O							
FUEL CONTAINER	O							
AIR LOCK ASSEMBLY	O							
BOILER DRUMS					O			
BOILER ITEMS								
COILS			O					
PANELS					O			
HEADERS			O		O			
FEEDERS								
MACHINED ITEMS								
SHELL SEGMENTS					O			

DESCRIPTION	CASE	CRATE	SKID	BUNDLE	BARE	DRUM	METAL DRUM	FIBRE DRUM
SHELL SEGMENTS IN STACKS					O			
SPHERE PETALS								
COLOUMNS, BASE PLATES, TIERCOS, PIPES, NOZZLE E1, F1, INTERNAL PIPES, PADS ETC.					O			
ROLLERS	O							
VALVE TRAYS								
VALVE TRAY COMPONENTS	O							
LATTICE GIRDERS		O						
FASTENERS	O							
GASKETS	O							
SUB CONTRACTS								
FAB STRUCTURALS					O			
SUPPORTING STRUCTURALS					O			
STRUCTURE SUB ASSEMBLY					O			
FAB PIPES					O			
GRATINGS					O			
STAIR CASES					O			
HANDRAILS/ PLATFORMS					O			
BOUGHT OUT COMPONENTS								
IRON & STEEL (LIKE PLATES, BEAMS, ANGLES, CHANNELS ETC.)					O			
PIPE FITTINGS								
CS PIPES, TUBES					O			
SS PIPES, TUBES					O			
FIN TUBES	O							
ELBOWS		O			O			
FLANGES	O	O						
VALVES	O							
GAUGES	O							
DEMISTERS		O						
ABSCRBANTS (LIKE MOLECULAR SIEVES, ACTIVATED ALUMINA, MOBILE SORBID)						O		
PAINT TINS		O						
PAINT DRUMS						O		
IGNITORS	O							
SPRAY NOZZLES	O							
ELECTRICAL INSTRUMENTATION								
MOTORS, PUMPS, COMPRESSORS, TURBINES	O							
SWITCH BOARDS, DISTRIBUTION BOARDS, STARTERS, JUNCTION BOXES		O						
INDICATORS, VIBRATOR SWITCHES	O							

DESCRIPTION	CASE	CRATE	SKID	BUNDLE	BARE	DRUM	METAL DRUM	FIBRE DRUM
CABLE BUNDLES, CABLE DRUMS					O			
CABLE TRAYS, CABLE RACKS, EARTHING MATERIAL		O						
OPERATIONAL SPARES	O							

13 PROCEDURE FOR HANDLING OF COMPONENTS

The purpose of this procedure is to protect the quality of the components/equipment while handling in various stages of manufacturing packing & despatching.

13.1 Adequate care shall be taken in handling the material, and components to avoid damage during receipts, storage issue manufacture & despatch operations.

13.2 Appropriate material handling equipment like fork lifters, cranes etc. shall be used where needed.

13.3 Lifting by crane and transportation by trolley of critical items and large components like rotors castings etc. shall be done carefully.

13.4 For critical items, where specified, special handling fixtures shall be used for lifting.

13.5 Slings and shackles used for lifting the components/equipment shall be checked for fitness and suitability before use.

13.6 Slings used on machined surfaces shall be suitably padded. No slings shall be used on journal surfaces.

13.7 Precision machined components like blades, catches, rollers etc. shall be lifted using suitable wooden pallets.

13.8 HANDLING OF COMPONENTS ON RECEIPT/DESPATCH

Before loading/unloading a packing case from the carrier look for the following shipping instructions painted on the packing case.

a) The markings showing the upright position.

b) The markings showing the sling position

c) Markings showing the fragile contents.

d) Other required markings as per clause no.10

13.8.1 Appropriate cranes and slings should be used for different components/ cases. Slings should normally make an angle as minimum as possible (width wise) but in no case more than 15º.

13.8.2 Handling and lifting should be done without jerks or impacts.

13.8.3 Immediately after receipt of the goods, the packing should be examined all-round for any sign of damage. If necessary, lift the cover or a number of boards of the case so as to make the contents visible. In the event of sealed packing being used the plastic sheeting should not be damaged. It is imperative that the packing material is restored in original condition after the inspection.

13.8.4 On receipt of the equipment it should be checked with the shipping list and missing or damage if any should be reported immediately. It is important to arrange for immediate examination to determine the extent of the damage, the cause of the damage and where applicable the person or persons responsible for the damage. According to general practice when transporting by railway or by road vehicle the carrier concerned should be immediately called upon (within specified periods) for jointly establishing a statement of the damage. This is essential as a basis for a subsequent claim and possible damage report to the insurance company.

13.8.5 Protective coating applied on machined surfaces should not be disturbed. The plastic covering should be put back carefully so that it prevents ingress of dust and moisture. Some packing may have vapour phase inhibitor (VPI) paper enclosed inside the packing cases. This should be restored to its original place as far as possible.

13.8.6 Silica gel and such other chemicals kept in the box as desiccants and indicators should also be left in the box itself.

14 GENERAL GUIDELINES FOR ODC TRANSPORTATION/DESPATCH

Based on the Dimensions/Weight indicated in the Transportation Sketch, the type of Trailer is decided and indicated in the Tender Enquiry.

14.1 TRANSPORTATION:

1. LOW BED TRAILERS (LB 8):
   - Well Bed Length : 10000mm
   - Over Gooseneck : 13000mm
   - Width : 3000mm
   - Carrying Capacity : 40MT

2. LOW BED TRAILERS (LB 16):
   - Well Bed Length : 12000mm
   - Over Gooseneck : 16000mm
   - Width : 3000mm
   - Carrying Capacity : 75MT

3. TOW TYPE TRAILERS (WITH FRONT DOLLEY 16 TYRES): 12000MM length
   (for Exceptional equipment length: 30000mm and above)

   Bigger Dia equipment are loaded in the Well with overhanging.

   Smaller Dia equipment with excess length are loaded over Gooseneck with rear hanging.
   The Vehicle Dimensions are defined above are only guidelines for selection based on actual Dimensions/ Weight of the Consignment

14.2 PACKING:

For all ODCs, Wooden Saddles are cut to the diameter of equipment as per the Transportation Sketch.

Wooden Saddles	For Diameter up to 4000mm	For Diameter above 4000mm
Length:	1836/2743mm (6'0"/9'0")	3353mm (11'0")
Width:	300mm (1'0")	300mm (1'0")
Height:	Saddle + one/two wedges a top	Saddle + three/four wedges a top

Number of Saddles:	
Minimum	3 in case of Loading inside Well +1 when loaded on Gooseneck
Maximum:	4 in case of Loading inside Well +2 when loaded on Gooseneck

For Securing the equipment firmly on the Trailer, 19mm (3/4"), wire rope with 25mm (1") Heavy Duty Turn Buckles / BD Clamps are used as Lashing for the equipment.

14.3 NUMBER OF LASHINGS:

	CONSIGNMENT LOADED INSIDE WELL BED	CONSIGNMENT LOADED OVER GOOSENECK
a) up to 40MT	4 (2 Single Line lashing 2 Double Line Lashing)	5 (3 Single Line Lashing 2 Double Line Lashing)
b) 40MT to 60MT	5 (3 Single Line Lashing 2 Double Line Lashing)	5 (Single Line Lashing 3Double Line Lashing)
c) 60MT and above	5 (2 Single Line Lashing 3 Double Line Lashing)	6 (3 Single Line Lashing 3 Double Line Lashing)

15 GUIDELINES FOR HANDLING/LOADING/LASHING

15.1 HANDLING

Figure 6

Before unloading the jobs Completely painted and neatly stencilled will be checked.

Pipes with split type end cover will be checked

Figure 7

All Coil Tubes to be provided with End Caps.

Figure 8

Neatly stacked Coil Assemblies.

Figure 9

Columns to be lifted with Nylon belts. This protect painting, edges and attachments.

Figure 10

15.2 LOADING

All the components to be transported by putting inside the properly fabricated Crating

Figure 11

Small components may fall down while transporting without closed crating and there are chances of missing of small parts. Hence, it is always better to transport small components in closed containers/crating. Loose to be being shipped in a closed crating.

Figure 12

No component loaded over the crating.

Figure 13

Headers supported with wooden V blocks at 3 meters interval.

Figure 14

Spacers in between each coil assembly.

Figure 15

Goose pipe to be provided with rubber pad protects removal of painting and damage to the job.

Figure 16

15.3 LASHING

Use Nylon belts only for lashing of all components. It prevents removal off painting and cut in the materials.

Figure 17

Nylon Belts used for lashing the beams.

Figure 18

16 PRODUCT WISE SPECIAL INSTRUCTION

Additional instructions of packing not included in this standard shall be covered by individual product standard.

17 REFERRED STANDARDS (Latest publications including amendments):

1) AA51420	2) AA55619	3) AA51414	4) IS:3401	5) AA10108
6) AA56126	7) AA51402	8) AA51401	9) IS:1234	

VACUUM PACKING FOR ELECTRONIC COMPONENTS

1 GENERAL

This standard lays down the packing instructions for packing of components / Electronic module / Assemblies to be dispatched against Customer contracts.

2 SCOPE

This procedure covers method of packing electronic components using vacuum packing in a wooden packing boxes.

3 OBJECTIVE

To establish a rust proof safe packing procedure and where the components required to protect against temperature and humidity. In general minimum temperature +5 deg C and maximum temperature 45 deg C, and relative humidity between 10% to 40%.

4 PACKING BOX

Wooden Box shall be made as per BHEL Standard AA0490010 for Domestic/ AA0490009 for Export/ AA0490004 for Seaworthy packing. Size of the box as per the contract requirement which has to be checked by QC.

5 PACKING PROCEDURE

a) Cleaning parts shall be thoroughly cleaned just before VCI (Volatile Corrosion Inhibitor) Vacuum packing. Finger prints on cleaned items are to be avoided as the same are very corrosive.

b) VCI Rust preventive oil (Ferrous grade oil base) shall be applied to all the components to withstand any corrosion.

6 VCI VACUUM PACKING

a) Bubble wrapping the items VCI vacuum packing.

b) Appropriate vapour corrosive packets one pouch (1 gm. /pouch) of VCI Anticorrosive Powder and one pouch (10gm./ pouch) of VCI Desiccant per 1000 cub. meter packing space shall be placed inside the VCI vacuum packing.

c) All the components shall be separately packed using VCI laminated Aluminium foils from which air/moisture are removed by the air vacuum device and sealed thoroughly using heat sealing machine. At the time of the evacuation the vacuum inside the pack should be less than 0.5 ata.

d) One identification slip containing component information such as description of item, Material No. Customer PO, Item No. Quantity etc. shall be put inside the VCI vacuum packing.

e) Top cover of the wooden box shall be sealed only after final clearance from QC for confirmation of above.

f) All boxes should be covered by water proof tarpaulin over top and on all sides.

g) The packing boxes shall be covered with GI sheets (0.25 -0.4mm thick) on all the sides for Export / Seaworthy packing.

h) Vacuum packing room temperature and Relative Humidity should be maintained as mentioned below:

   Min. +5 deg. C and Max. 45 deg. C, Relative humidity between 10% to 40%.

7 COMPONENTS REQUIRED

7.1 VCI laminated Aluminium foil

Volatile Corrosion Inhibitor (VCI) safe foil shall be with aluminium barrier laminated which is flexible, heat sealable, water vapour and anticorrosion resistant barrier laminate of polyester, Aluminium foil and VCI Polyethylene. It is used as a primary packaging material for packing metal components and sealed with the help of a heat sealer after vacuuming with vacuum machine maintaining the humidity level below 40 RH inside the package.

7.2 Composition construction of VCI laminated Aluminium foil

a) PET Film : 12 Microns

b) Bonding layer : 2 Microns

c) Aluminium Foil : 9 Microns

d) Bonding layer : 2 Microns

e) VCI Poly film : 100 Microns

f) Total thickness : 125 Microns + or – 5%

7.3 Properties of VC Laminated Aluminium foil

a) Basic Weight : 138 gsm +/- 8%

b) Sealing condition : 180 C/ 2 sec

c) Tensile strength

MD: 20 kgf

CD: 18 kgf

d) Tear Strength

MD 4.8 kg

CD:3.4 kg

e) Heat Seal Strength : 30.380 N/cm

f) WVTR Value : 0.05gms/m /24 hrs.

g) OTR Value : 0.1 cc/m/24 hrs

8 MARKING OF PACKING BOX

Mark the following information on the two adjacent sides of the each package

a) Material No.

b) Customer PO

c) Item No.

d) Quantity

e) Storage Requirement : Indoor

f) Content Description : Electronic Module

g) Net weight (in kg)

h) Dimension (L x W x H in centimetres)

i) Project Name

j) Consignee

k) Water proofing (Umbrella Stencilling)

l) Upside direction

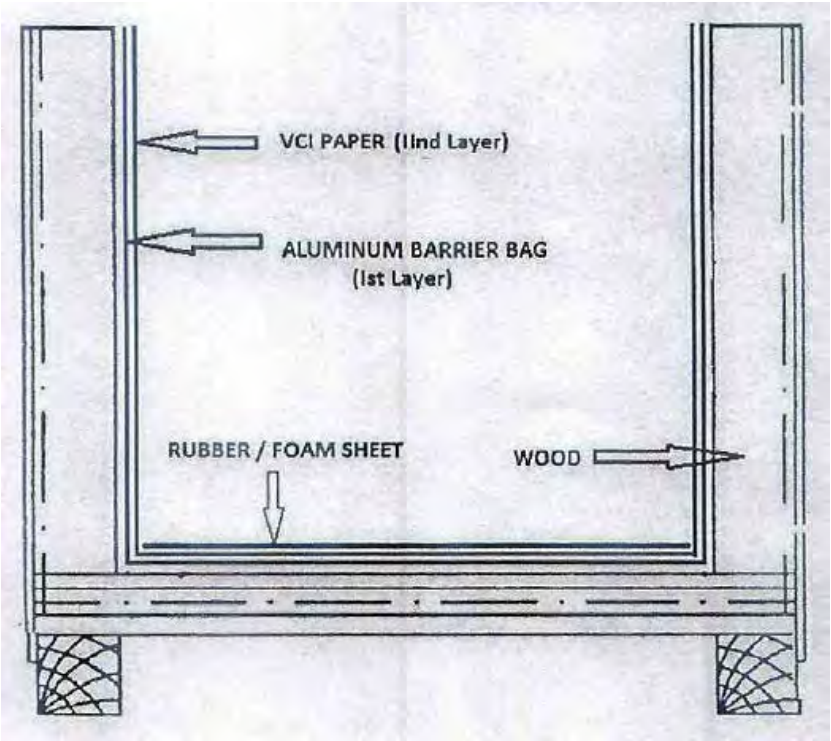
VCI PAPER (IInd Layer)
ALUMINUM BARRIER BAG
(Ist Layer)
RUBBER / FOAM SHEET
WOOD

Figure 1

VACUUM PACKING FOR ELECTRICAL COMPONENT

1 GENERAL

This standard lays down the packing instructions for packing of components / Electrical components Stator/ Rim punching, Wound Pole/ Field Coils and Stator coils / bars to be dispatched against Customer contracts.

2 SCOPE

This procedure covers method of packing component in a wooden packing boxes.

3 OBJECTIVE

To establish a rust proof safe packing procedure and where the components required to protect against temperature and humidity. In general minimum temperature +5 deg C and maximum temperature 45 deg C, and relative humidity between 10% to 40%.

4 PACKING BOX

Wooden Box shall be made as per BHEL Standard AA0490010 for Domestic/AA0490009 for Export/ AA0490004 for Seaworthy packing. Size of the box as per the contract requirement, which has to be checked by QC.

5 PACKING PROCEDURE

a) All items packed are to be marked by QC with “OK” stickers. Varnished stator punchings are to be brought down to room temperature before labelling them “OK” for packing. Do not pack hot/warm stator punchings that have is just received from the varnishing.

b) Packing of stator punchings, wound pole/ field coils and stator coils / bars should be done in a covered shed.

c) Packed materials are to be stacked in proper alignment and to be kept in wooden packing.

6 Additional Packing Methodology for Stator / Rim Punchings (Double stacking) only

In order to eliminate the use of studs avoid double stack packaging per box. Where double stacked packing boxes are unavoidable, the stator /rim punchings are to be securely tightened using GI studs, nuts and soft material washers (rubber/plastic). GI studs, nuts and soft material only to be used in case of double stacking of rim / stator punchings (with holes). Use soft rubber washers to seal the punctured opening at the bottom from where the studs pass in each layer of VCI (Volatile Corrosion Inhibitor) paper, polythene and tarpaulin sheet in case of rim /stator punchings (with holes).

a) GI studs with rubber washer to be placed initially inside the wooden packing box.

b) Over the wooden base, place water proof tarpaulin sheet.

c) Rubber washer shall be placed after the layer of tarpaulin sheet.

d) Then place a layer of porous plastic sheet with total thickness of at least 5mm (for cushioning and reduces the chances of damage to punchings).

e) Place the Aluminium Barrier laminated Bags over this porous sheet, place the rubber washer over it.

f) Place VCI papers on the Aluminium barrier bag and fix with rubber washer.

g) PVC Pipes shall be inserted over the GI studs. These pipes are to be used to cover each stud, to protect its direct contact and hence rubbing with punchings.

h) Now place the stack of punchings over the VCI paper and securely tighten the punchings using nuts and soft material, washers.

i) Each layer should be secured in position. Wrap the punchings with VCI paper and properly sealed separately using an adhesive tape.

j) Silica Gel packets are to be placed over the VCI paper and uniformly distributed inside the boxes on the VCI paper to remove/prevent moisture.

k) Aluminium barrier laminated bag has secured in position and properly sealed by using heat sealing machine and air to be drained out by using vacuum pump. At the time of the evacuation the vacuum inside the pack should be less than 0.5ata.

Use two separate VCI papers for doubled stacked boxes independently covering each stack. Similarly two Aluminium barrier laminated bag are to be used to wrap the two stacks independently, as explained above.

7 Additional Packing Methodology for Wound Pole/ Field Coils and Stator Coils/Bars only

a) Over the wooden base, place the waterproof tarpaulin sheet.

b) Then place a layer of porous plastic sheet with total thickness of at least 5mm (for cushioning and reduces the chances of damage to Wound pole/field coils and stator coils/ bars.

c) Place the Aluminium barrier laminated bag over this porous sheet.

d) Place the VCI paper (Volatile Corrosion Inhibitor as per BHEL Standard AA51406) on the Aluminium barrier laminated bag along with rubber washer.

e) Bare copper portion of field coils and stator coils / bars to be covered by VCI paper pouch and fasten with VCI tape.

f) Now place the wound pole, stack of field coil and stator coil / bars over the VCI paper.

g) Each layer should be secured in position. Wrap wound pole / field coils and stator coils / bars with VCI paper and properly sealed separately using an adhesive tape.

h) Silica Gel packets are to be placed and uniformly distributed inside the boxes on the VCI paper to remove/prevent moisture.

i) Then Aluminium barrier laminated bag has secured in position and properly sealed by using heat sealing machine and air to be drained out by using vacuum pump. At the time of evacuation the vacuum inside the pack should be less than 0.5ata.

j) The VCI paper must contact the stator / rim punchings, wound pole / field coils and stator coils/bars. It has to ensure that the VCI paper, Aluminium barrier bag should not get damage / puncture during the packing process.

k) Top cover of the wooden box shall be sealed only after final clearance from QC for confirmation of above.

l) All boxes should be covered by water proof tarpaulin over top and on all sides.

m) The packing boxes shall be covered with GI sheets (0.25 -0.4mm thick) on all the sides for Export / Seaworthy packing.

n) Vacuum packing room temperature and Relative Humidity should be maintained as mentioned below:

   Min. +5 deg. C and Max. 45 deg. C, Relative humidity between 10% to 40%.

8 COMPONENT REQUIRED

8.1 VCI laminated Aluminium foil

Volatile Corrosion Inhibitor (VCI) safe foil shall be with aluminium barrier laminated which is flexible, heat sealable, water vapour and anticorrosion resistant barrier laminate of polyester, Aluminium foil & VCI Polyethylene. It is used as a primary packaging material for packing metal components and sealed with the help of a heat sealer after vacuuming with vacuum machine maintaining the humidity level below 40 RH inside the package.

8.2 Composition construction of VCI laminated Aluminium foil

a) PET Film : 12 Microns

b) Bonding layer : 2 Microns

c) Aluminium Foil : 9 Microns

d) Bonding layer : 2 Microns

e) VCI Poly film : 100 Microns

f) Total thickness : 125 Microns + or – 5%

8.3 Properties of Aluminium Barrier laminated Bag

a) Basic Weight : Unit: g/sq. m 150 +/- 5

b) Tensile strength : Unit: N/sq. mm MD: 40 (min.)

Unit: N/sq. mm TD: 41 (min.)

c) Water Vapour Transmission : Unit: g/m^2 0.01 in 24 hrs. at 38 deg C & 90% RH(max)

d) Oxygen Transmission : Unit: cm^3/m^2 0.02 in 24 hrs. at 38 deg C & 90% RH (max)

e) Sealing Temp. : Unit : Degree C 180-220 deg C

9 MARKING ON PACKING BOX

Mark the following information on the two adjacent sides of the each package.

a) Box No.

b) Customer PO

c) Product Name.

d) Project Name

e) Quantity

f) Storage Requirement : Indoor

g) Net weight (in kg)

h) Dimension (L x W x H in centimetres)

i) Consignee

j) Water proofing (Umbrella Stencilling)

k) Upside direction

l) Sling position indicator

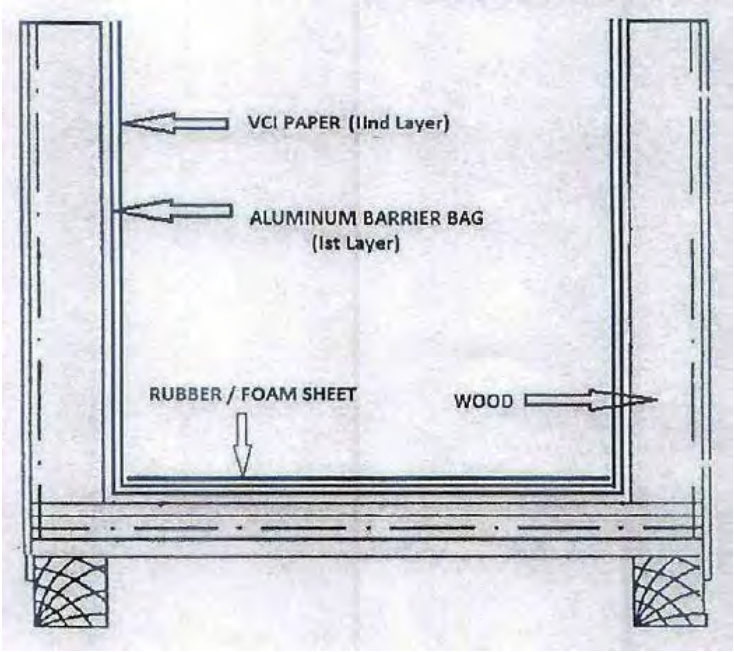

Figure 1

Figure 2

Figure 3

Figure 4

Figure 5

SECTION-II

SUB-SECTION-A

STANDARD TECHNICAL SPECIFICATIONS- MECHANICAL

1.0 SCOPE

This specification covers design, engineering, supply of material, fabrication, assembly, inspection and testing at shop as well as at site, erection and commissioning, painting and functional demonstration testing at site.

2.0 CODES & STANDARDS

The design, fabrication & assembly, erection & performance of steel tanks shall comply with all latest statutory regulations and safety codes applicable in the locality where the tanks are to be installed. Tanks shall conform to the latest applicable Indian / British / USA standards. The vendor shall not be construed to be relieved of his responsibility by virtue of this specification. The tank in general shall conform to the latest editions, as applicable, out of the following standards.

I. IS-800: Code of practice for use of steel in general building construction

II. IS-803: Code of practice for design, fabrication and erection of vertical mild steel cylindrical welded oil storage tank.

III. IS-804: Specification for rectangular pressed steel tanks

IV. IS-805: Code of practice for use of steel in gravity water tank.

V. IS-816: Code of practice for metal arc welding for general construction in MS.

VI. IS-817: Code of practice for training and testing for metal arc welder

VII. IS-2825: Code of practice for unfired pressure vessel

VIII. BS-2594: Specification for carbon steel welded horizontal cylindrical storage tank

IX. BS-2654: Specification for vertical steel welded storage tanks with butt welded shells for the petroleum industry

X. Indian Factories Act

XI. American code for oil tanks API 650

XII. Material Specification as per relevant IS / or approved equal

XIII. American water works association standards (AWWA D100)

3.0 DESIGN REQUIREMENT

3.1 General Requirement

3.1.1 All tanks will be mild steel tanks. The tanks will be of welded construction and will be designed to withstand satisfactorily the internal forces due to the liquid which these tanks have to hold as specified and external forces due to wind and seismic forces without deformation or undue strain.

The plates will be cold rolled through plate bending machines by several no. of passes to the curvature.

3.1.2 Tank thickness shall be calculated as per IS803 latest edition. Intermediary wind girder design, Wind Design, Seismic design, anchor bolt design / selection etc. shall be done as per API 650 latest edition, latest addendum available at the time of detail engineering.

3.1.3 All tanks will be designed for the capacities, dimensions and working conditions as specified in this specification. The tanks will be provided with all necessary connections as specified. The design of tanks will be such as to allow easy inspection, cleaning and repair. Due consideration will be given to wind loading and adequate stiffening will be provided to prevent failure of tank due to buckling when it is empty. A **1.5 mm** corrosion allowance for shells, bottom and roofs above and beyond the required thickness / calculated thickness / nominal thickness as specified in the design code shall be provided.

3.1.4 Vessel seams shall be so positioned that they do not pass through nozzle connections on vessel. For vessels consisting of more than two sections, longitudinal seams shall be offset.

3.1.5 The inside seam should be ground smooth, suitable for application of corrosion resistant primer. If the stiffening of shell, bottom and / or roof is necessary, tanks will be stiffened from outside.

3.1.6 Flange faces of all nozzles shall be machined and squared with the vessel center line.

3.1.7 All roofs and supporting structures shall be designed to support dead load plus a uniform live load of not less than 150 kg/m^2 of projected area.

3.1.8 The tanks shall be designed to have all courses truly vertical. Adequate distance between vertical joints in adjacent courses shall be taken so that the distortion is reduced to minimum.

3.1.9 When removing temporary attachments from shell plates, care should be taken that parent plate is not damaged. Holes in plate work to assist in fabrication / erection should be avoided as far as possible. The location of holes and method of filling shall be indicated in the fabrication drawing. Any projection of metal shall be chipped and ground flush with the plate surface. The plate shall not be gouged or torn in process of removing lugs.

3.1.10 In the construction of shell, very care shall be taken to minimize distortion or lack of circularity due to welding or for any other reason.

3.1.11 Material of construction of all tanks shall be mild steel conforms to IS – 2062 grade – B unless otherwise specified in the specification. Material of construction for structure (angles, channels etc.) shall be IS 2062 Gr. A.

3.2 Alignment

3.2.1 Plates to be joined by butt-welding shall be matched accurately. Misalignment in completed vertical joints shall not exceed 10% of the plate thickness or 1.5 mm for plates of 20 mm thick and under, whichever is larger.

3.2.2 In completed horizontal butt joints, the upper plate shall not project beyond the face of the lower plate at any point by more than 20% of the upper plate thickness with a maximum of 3 mm for plate

thickness exceeding 8 mm except that for plate thickness 8 mm and under, the maximum shall be 1.5 mm.

3.2.3 Each tank shall be properly constructed ensuring perfect vertical alignment with 5 mm or as specified in the relevant code / standard and tank circularity within 5 mm on diameter or as specified in the relevant code / standard. Local bulging and / or depressions at any location of tank particularly shell shall not be permitted.

3.3 WELDING

3.3.1 Tanks and other attachments shall be welded as per IS-816.

3.3.2 Welding sequence shall be so adopted that distortion due to welding shrinkage shall be minimum. Welding procedure specification shall be submitted for approval of BHEL giving details of material, welding position, sequence, type of electrode used, pre-heat & post weld requirement etc as per the code of construction. Brand name of electrodes to be used with proper classification (e.g. E 6013) shall be as per BHEL's approval.

3.3.3 Welding shall not be carried out when the surface is wet and during periods of rain and high winds unless the welder and the work are properly shielded which should meet the approval of the purchaser.

3.3.4 Inspection of all welds shall be carried out in accordance with the governing code of construction. All material used by the purchaser such as electrodes, gaskets, bolts, nuts etc. shall be conforming to relevant standards of repute and approved by the purchaser prior to use.

3.3.5 Each tank shall be complete with access staircase, ladder and safety cage and fittings like drain connection, overflow connection(pipe) till bottom of tank, tank inlet and outlet covers, level gauge glass, fittings with isolation cocks and protection covers, tank vent connection etc. all complete with needed accessories for the completeness of the tanks.

3.3.6 All openings in tank plate shall be well reinforced in approved manner by adding pad plates of adequate size and / or structural sections.

3.4 STAIRCASE / ACCESS LADDER AND HAND RAILING

3.4.1 All cylindrical vertical tanks shall be provided with spiral staircase and shall conform to the requirements specified in design codes / standards unless specified otherwise. All stair treads shall be 32 mm steel fabricated gratings. Each tread, if needed, shall be housed in individual steel fabricated frame which shall be adequately supported from the tank outer periphery. The staircase shall have minimum 1200 mm clear width.

3.4.2 Access ladder, one (1) for each horizontal cylindrical / rectangular tank shall be provided for access to the tank roof. It shall be steel fabricated having minimum 450 mm width. Ladder stringers shall be heavy steel flats or angle section. All rungs shall be minimum 20 mm diameter rods spaced at not more than 30 mm center to center. All ladders shall have steel fabricated safety cage to the approved construction. Safety cage shall be provided about 2.5 m clear height of the ladder. Access ladder's stringers shall be widely spaced at top for free access to the tank roof.

3.4.3 All staircase and roofs of vertical cylindrical tanks shall be provided with pipe hand railings of effective height as indicated in the relevant code / standard throughout. Handrails shall be constructed out of 32 mm medium class galvanized steel pipe conforming to IS- 1239: 1968. Handrail posts shall be arranged at spacing not greater than 1850 mm. Two (2) sets of pipes horizontal runners all along the length shall be provided. All welds joints in the handrails shall be ground flush to protect any person getting injured. Steel toe plates of 100 mm flats shall be used. Hand railing shall be fabricated and installed in an approved manner as directed by purchaser in accordance with approved drawings.

3.4.4 Unless otherwise specified, for all flanged connections, vendor shall furnish suitable counter flanges and necessary nuts, bolts and gaskets materials.

3.4.5 Unless otherwise specified, bolts and nuts shall be hexagonal head conforming to bolts and nuts shall be SA 193 & 194 respectively.

3.4.6 Gaskets shall be 3 mm thick full-face rubber. On completion of hydraulic test / water fill test, contractor shall replace the gaskets used during testing at his own cost.

3.4.7 Void.

3.4.8 During erection of tank, shell plates shall be suitably supported both for outside and inside to avoid buckling / collapsing of tank due to high-speed wind, gust or severe storm, if any, occurring during erection.

3.5 VERTICAL CYLINDRICAL STORAGE TANKS

3.5.1 The vertical cylindrical storage (non- pressure) tanks shall be of mild steel welded construction and shall be designed in accordance with codes and standards as specified. The vertical cylindrical storage tanks shall have slightly sloping bottom towards an adequately sized sump inside the tank to enable complete draining of the tank. The tank shall be designed for a wind pressure and seismic coefficient as specified.

3.5.2 Conical roof shall be either self-supported or supporting. The roof shall have a slope as specified in the relevant design code to ensure drainage of rainwater. Needed roof rafters and purlins adequately designed shall be provided.

3.5.3 All plates to be used for fabrication of tank shall be checked and all sides trimmed to make them square.

3.5.4 All bottom plates shall have butt weld joints to adequately support lining.

3.5.5 All shell course plates shall be taken during bending to prevent plate skewing. For butt weld joints, edges shall be prepared which shall be uniform and smooth throughout. To maintain needed root penetration gap at any butt weld joint, sufficient numbers of erection cleats shall be provided on all sides of outer periphery of each shell plate. Plates for tanks shall be straightened by pressing or by other non-injurious methods.

3.5.6 Each shell course shall be of uniform width throughout longitudinal weld in plates. Make up for the course width shall not be permitted. Shell plates in each course width shall be so arranged that all vertical joints be staggered having a minimum of 600 mm stagger. Shell thickness could be reduced

in upper courses depending on design requirements but in no case the plate thickness shall be less than 6 mm.

3.5.7 The tank height shall be completed by the provision of top curb/ angle which shall be butt-welded to the adjacent tank plate courses. The outstanding leg of the curb angle shall be kept outside the tank periphery. All butt weld joints shall be full strength welds but for design of shell plate thickness adequate weld efficiency as recommended by applicable code(s) shall be used.

3.5.8 Tank roof shall be either self-supported or supported from rafters / steel fabricated central column(s). Adequately sized and spaced rafters and purlins shall be provided. All rafters shall have sliding bolted connections at one end and preferably on the tank periphery side. The roof-supporting frame shall have needed tie rods or bracing sets.

3.5.9 Roof plates shall have butt-joints to adequately support lining. No joint of roof plate over the supporting frame shall be made.

3.5.10 Openings needed for mounting various specified accessories shall be well reinforced in accordance with application codes and as approved. Manhole shall the bolted and hinged covers unless otherwise specified.

3.5.11 All inlet pipe nozzles located at the top of tanks shall be provided with internal piping up to 500 mm high above the tank's bottom inside with suitable weir plate at bottom. The inside piping shall be adequately supported and shall be provided with adequately sized vent connection at pipe top.

3.6 RECTANGULAR TANKS

3.6.1 Rectangular tanks shall be fabricated in steel material and shall be designed to withstand internal hydrostatic pressure. In addition, these shall be checked for a wind pressure and seismic coefficient as specified wherever applicable. While worst of these two shall be considered, the permissible stress shall be increased as per good engineering practice when their effect considered with tank load.

3.6.2 Tank bottom and / or side plates shall be of minimum 8 mm thick plate. Corrosion margin of at least 1.5 mm shall be provided over the design thickness of bottom and / or side plates.

3.6.3 To support tank plates and to maintain required unsupported plate length, adequately sized and spaced steel structural closed frame shall be provided inside the tank. Longitudinal and / or vertical structural members to connect and adequately support these frames shall be provided at corners. Horizontal diagonal members / sway bracings at corner shall also be provided.

3.6.4 Tank plates cut to size shall be welded on these frames. Plate butt weld joints at other locations shall be eliminated to avoid warping of the plates at free joints. Adequate openings in the structural frames, particularly at the bottom shall be provided to ensure complete unrestricted drainage of tank at one point. Suitable sized drain valve of size minimum 25 NB unless otherwise specified, shall be provided below the tank bottom for proper draining of the tank.

3.6.5 Complete assembled tank shall have at its bottom longitudinal steel fabricated bearer beams welded to it. The tank with bearer will rest over number of concrete blocks to be provided by purchaser. The tank shall be adequately bolted / welded to the concrete blocks. Needed inserts / anchor bolts shall

be furnished by the bidders. Grouting of tank over concrete blocks in approved manner shall be included in bidder's scope of work, if erection is also awarded to the bidder.

3.6.6 Where rectangular tanks are flushed in dual compartments the inside partition plate shall be well reinforced to withstand hydrostatic test pressure completely on one side throughout the full height.

3.6.7 The rectangular tank shall be designed as per good engineering practice and reference shall be taken from the book named "Theory of plates and shells" by Timoshenko. Design calculation shall be done in accordance with the above mentioned book.

3.6.8 Suitable steel structural e.g. channels shall be provided below the bottom plate so that tank can rest on the foundation / slabs through the structural supports.

3.9 HORIZONTAL CYLINDRICAL TANK

3.9.1 The horizontal cylindrical tank with dished ends shall be of mild steel welded construction and shall be designed in accordance with BS – 2594 / IS – 2825 / ASME as specified. The tank shall be designed for a wind pressure and seismic coefficient as specified. While worst of these two shall be considered, the permissible stress shall be increased as per relevant code / standard.

3.9.2 The shell and dished end plate thickness shall be chosen as per design requirement but in no case the dished end and shell plate thickness shall be less than 8 mm.

3.9.3 All seams, longitudinal as well as circumferential, shall be butt-welded. Longitudinal seams should not be situated in the lower one-third of a tank or on the top center line.

3.9.4 All tank shall be supplied with integral saddle support and shall be designed in accordance with BS-2594 / IS – 2825 / ASME as specified.

4.0 TESTING AND INSPECTION AT MANUFACTURERER'S WORKS

4.1 General

4.1.1 The supplier shall provide inspection to establish and maintain quality of workmanship in his works and that of his subcontractors to ensure the mechanical accuracy of components, compliance with drawings identity and acceptability of all materials, parts and equipment. He shall conduct all tests required to ensure that the equipment and material furnished shall conform to requirements of the acceptable codes. All tests and test procedure proposed by manufacturer shall be submitted to the purchaser for their prior approval.

4.1.2 All materials used for manufacture of the equipment under this specification shall be of tested quality. Relevant test certificates shall be made available to the purchaser before the final shop inspection. In case the relevant correlating test certificates are not available, the supplier shall arrange to carry out the necessary tests required by codes at his own cost.

4.1.3 Alloy cast iron and cast steel components shall be tested for both physical and chemical properties in absence of purchaser's representatives. Test bears shall be either integral or taken from the same ladle of material as the casting they represent.

4.1.4 All materials including valves, instruments, pipings, flanges, counter flanges etc. shall be procured from BHEL approved manufacturer's only. Dealers are not acceptable.

4.2 TESTING AND INSPECTION FOR TANKS

4.2.1 The scope of testing and inspection for pressure vessel covered in this specification shall generally comprise of the following:

I. Examination and approval of fabrication drawings to ensure that design, materials and fabrication details meet requirement of code and specifications. Purchaser will review these drawings for interface problems and conformity with the general arrangement drawings and accord their approval.

II. Examination of materials of construction and identification with material test certificates.

III. All the plates of thickness 50 mm or more shall be ultrasonically tested to ensure freedom from laminations.

IV. Ensuring the relevant weld procedure and welder qualification tests are in accordance with stipulated code requirements.

V. Inspection of dished end flanges and alloy steel bolting where required.

VI. Inspection during fabrication at appropriate stages including fit ups.

VII. For all butt welds, the root run and final run shall be subjected to dye-penetrate or magnetic particle inspection. For all fillet welds the final run shall be subjected to dye-penetrate / magnetic particle examination.

VIII. Examination of radiographs including radiographic techniques, supervision of other non - destructive tests and heat treatment procedure as required by codes and specifications.

IX. Examination of internal cleanliness before final closure.

X. Dimensional examination of completed vessel including axis marking, proof marking, match marking etc.

XI. Witnessing of hydrostatic, pneumatic or vacuum tests or special tests as required by the code and specification. In case of hydrostatic tests, the test pressure must be kept for a minimum of two hours.

XII. Witnessing cleanliness, preservation, packing and marking.

XIII. Stamping of vessel and issue of certificates.

XIV. All tanks under this specification shall be tested as per the relevant design and testing code / standard. Supplier shall submit the detailed testing procedure for the tanks during detail engineering stage for BHEL / customer / consultant's approval and approved document shall be adhered by them and testing shall be done accordingly without any commercial implication.

4.2.2 **NON - PRESSURE TANKS**

The scope of testing and inspection for non-pressure tanks covered in this specification will comprise of the following:

i. Identification of materials to manufacturer's test certificates.

ii. Inspection of plate edges after edge preparation and checking curvature against templates if shell plates sent after rolling.

iii. Checking of dimension and match marking.

iv. Bottom testing

a. After the bottom and bottom course of shell plates have been welded, the bottom shall be tested by pumping air beneath the bottom plates to a pressure just sufficient to lift them off the foundation and in any case not less than 100 mm water gauge. The pressure shall be held by construction of a temporary dam of clay or other suitable material around the tank periphery. Soap suds or other suitable material shall be applied to all joints for detection of leaks.

b. Fuel oil may be used instead of air and soap suds to test for leaks, subject to prior agreement and approval of purchaser.

c. Alternatively, the bottom seams may be tested by vacuum box method subject to prior agreement and approval of the purchaser. The vacuum box used shall comply with IS- 803, 1976 (figure-24)

v. Shell testing

The shell of fixed roof non - pressure tanks shall be tested after completion of roof. Testing shall be done by filling the tank with water to the level of the top leg of the top curb angle and noting any leaks.

vi. Roof testing

The roof of the tank shall be tested by pumping air under the roof plates while the tank is still full of water. In the non - pressure tank, the roof shall be tested to a pressure of 75 mm of water gauge and in case of pressure roof tanks, to a pressure of one and a quarter times the pressure at which the pressure sides of the pressure / vacuum relief valve is designed to open. Soap suds or other suitable material shall be applied to all joints for detection of leaks.

vii. All field-testing shall be performed prior to any painting or coating application.

4.3 REPAIR OF LEAKS

4.3.1 All leaks detected during testing shall be repaired to the satisfaction of the purchaser and on completion retested for leakage as per approved procedure.

4.3.2 In the joints between roof plates only, pin hole leaks may be repaired by mechanical caulking. However, where there is any indication of considerable porosity, the leaks shall be sealed by laying down an additional layer of weld over the porous sections.

4.3.3 In all other joints, whether between shell plates or bottom plates or both, leak shall be repaired only by welding and if necessary, after first cutting out the defective part.

4.3.4 When the tank is filled with water for testing, defects in the shell joints shall be repaired with the water level at least 300 mm below the joint being repaired.

4.3.5 No welding shall be done on any tank unless all lines connecting thereto have been completely blanked off. No repairs shall be attempted on tanks while filled with oil, nor any tanks which have contained oil until the tanks have been emptied, cleaned and freed from gas in a safe manner. No repair shall be attempted on a tank which has contained oil except in a manner approved in writing by the purchaser, and in absence of the purchaser's inspector.

SECTION-II

SUB-SECTION-A

GUIDANCE FOR DESIGNING AND FABRICATION OF STEEL CONSTRUCTIONS FOR RUBBERLINING & VE GLASS FLAKE LINING

1. INTRODUCTION:

This guidance covers the minimum requirements for the design and fabrication of carbon steel vessels, equipment and pipes for rubber lining and VE Glass Flake lining.

2. GENERAL:

2-1 : Structure of steel constructions should be designed to withstand mechanical shocks under transportation and service. Particularly, hard rubber / VE Glass Flake lined vessels should be paid full attention because these vessels are liable to cause cracks when transported or installed.

2-2 : As the lining process is done manually, any constructions (except pipe) inaccessible by hands should be split into accessible one, as shown in Fig. 1.

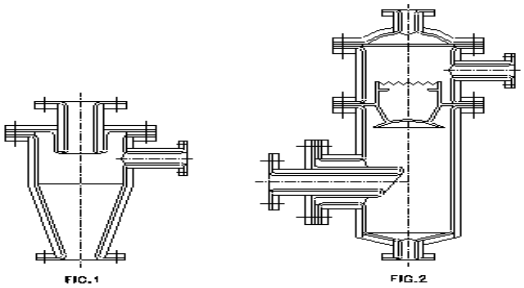

2-3 : The parts tend to wear must be designed to be able to dismount and check or exchange easily as shown in Fig.2

2-4 : All lining surface should be designed as simple as possible and reinforcement must be provided on the side not to be lined as shown in Fig.3.

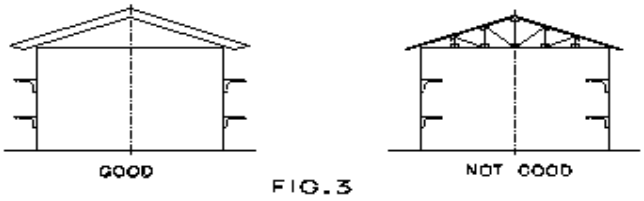

FIG.3

2-5 : When heating is necessary, care must be taken not to raise the temperature partially too high as shown in Fig.5 (b), or not to contact with rubber directly. It is recommended to design as shown in Fig. 5(a) and keep the hating pipe at least 100 mm apart from the lining.

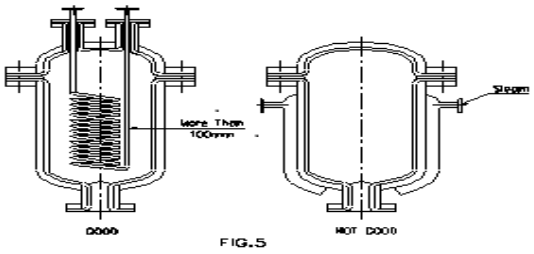

FIG.5

2-6 : When it is necessary to insert nozzles in vessels special attention should be paid to dimensions securing enough room at overlap of rubber lining as illustrated in Fig. 6.

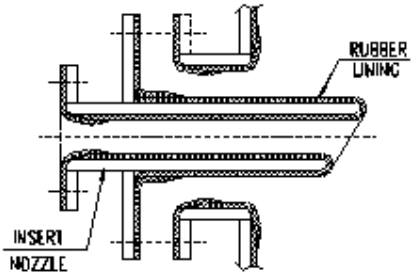

FIG.6

3. WELDING AND FINISHING:

In order to get the optimum adhesion between the base metal and rubber sheet / VE Glass Flake lining, or to prevent pinholes or other defects, designers and manufacturers of pipes, vessels and other steel constructions are requested to give proper consideration to the following points.

3-1 : Welds and flush on the side to be lined shall be ground smoothly and must be free of cracks, undercuts, overlaps, pinholes and blowholes.

3-2 : Butt joint is preferable and overlap joint is not recommended for lining vessels. Welding must be generally made from both sides as shown in Fig. 7.

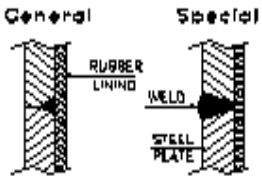

FIG.7

3-3 : All corners should have the curvature of at least 3 mmR for convex surface and at least 10 mmR for concave surface as shown in Fig. 8.

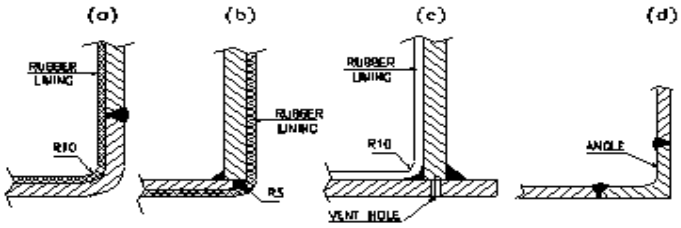

FIG.8

3-4 : All welds for lining vessels should be continuous as shown in Fig. 9.

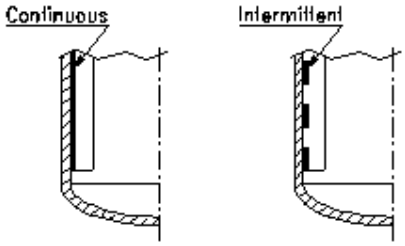

FIG.9

3-5 : When air pocket brought about by continuous welding cannot be avoided, air vent-hole or intermittent weld must be provided as shown in Fig. 10.

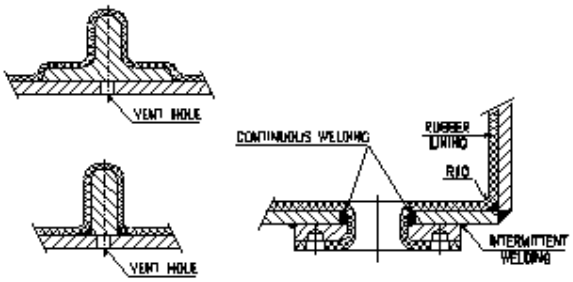

FIG.10

4. PIPES AND FITTINGS:

Pipes and Fittings should have smooth surface on the side to be lined. Lining on surfaces with sharp projection and irregularities should be avoided.

Flat-faced flanges shall be welded on square to pipes or fittings. The weld on the front face should be continuous and ground to a smooth convex surface not less than3 mm in radius.

Pipings should be designed to use standard pipes and fittings and complied with following requirement.

4-1 . STRAIGHT PIPES:

The maximum length of straight pipes, measured between flange face, which can be satisfactorily lined are given below:

Nominal diameter (mm)	Maximum length (mm)
Over 25 to 40	2750
Over 50 to 80	5500
Over 100 to 550	6000
Over 600	12000

4-2. STRAIGHT PIPES:

The dimensions of Elbows and Bends which can be satisfactorily lined are as below:

DIMENSIONS OF BENDS AND ELBOWS (STEEL) FOR RUBBER LINING FEASIBILITY :

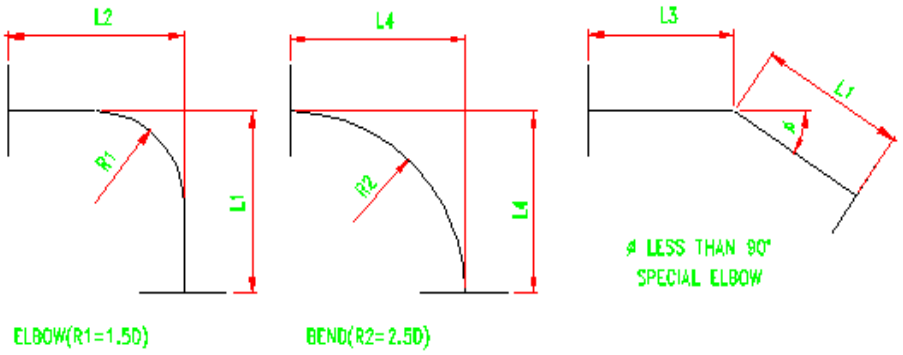

ALL DIMENSIONS IN MILLIMETRES:

NOM DIA.	MAX L1	MAX L2, L3	MAX. L4
25	90	300	175
32	95	300	210
40	100	300	250
50	115	500	280
65	130	2000	325
80	150	3000	400
90	170	3000	450
100	190	3000	500
125	195	3000	
150	230	3000	
200	310	3000	
250	385	3000	
300	465	3000	
350	540	3000	
400	615	3000	
450	692	1000	
500	770	1000	
550	838	5500	
600	912	5500	
650	990	5500	
700	1000	12000	

Note: The above tabulation shows sizes which can be fabricated and rubber lined satisfactorily.

DIMENSIONS OF REDUCING PIPES (STEEL) FOR RUBBER LINING FEASIBILITY of CONCENTRIC AND ECCENTRIC REDUCING PIPES.

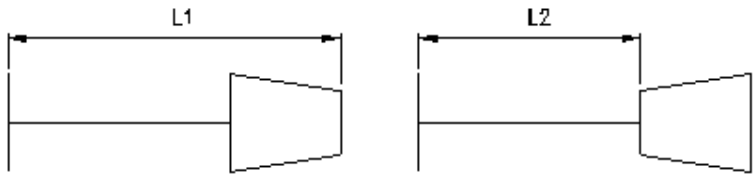

REDUCING PIPES

4-3 REDUCING PIPES:

The dimensions of concentric and eccentric reducing pipes which can be satisfactorily lined are given below. Pipes should be reduced by mechanical process or by high-frequency reducers.

ALL DIMENSIONS IN MILLIMETERS

NOM.DIA	L1 MAX.	L2 MAX.	NOM.DIA	L1 MAX.	L2 MAX.
25	100	2750	200	230	5500
32	120	2750	250	250	5500
40	120	2750	300	300	5500
50	130	5500	350	480	5500
65	150	5500	400	500	5500
80	150	5500	450	530	5500
90	160	5500	500	650	5500
100	160	5500	550	650	5500
125	200	5500	600	650	11000
150	220	5500	700 & above	2000	10000

Note:

- The above tabulation shows sizes which can be fabricated and rubber lined satisfactorily.

DIMENSIONS OF TEES, CROSSES AND BRANCHED PIPES (STEEL) FOR RUBBERLNING FEASIBILITY.

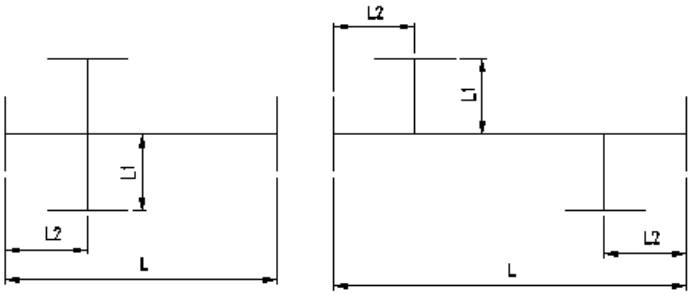

THE DIAMETER OF THE BRANCH(S) SHOULD BE THE SAME OR LESS THAN THAT OF THE STRAIGHT PIPE.

ALL DIMENSIONS IN MILLIMETERS

NOM.DIA	L	L1 MIN.	L2 MAX.
25	2750	80	100
32		85	100
40		90	100
50	5500	100	100
65		115	100
80		125	150
90		135	150
100	5500	145	150
125		165	150
150		190	200
200		225	250
250		270	300
300	5500	310	500
350		340	500
400		370	500
450		410	500
500		450	500
550		490	500
600 & above	12000	see notes below	see notes below

Note: The above tabulation shows sizes which can be fabricated and rubber lined satisfactorily.

5. FLANGES AND GASKETS:

5-1 All branches and outlets of tank should be equipped with flange to allow the rubber lining to over flange face. Typical flanged joints are illustrated in Fig.11.

5-2 Mating flange of sectional tank should be square and plumb, and sections should be made to avoid distortion and when bolted together.

5-3 Normally, soft rubber gaskets should be interposed between lined flanges. If the flange faces have to withstand very high loads, the flanges joint shown in Fig. 11(d) should be used.

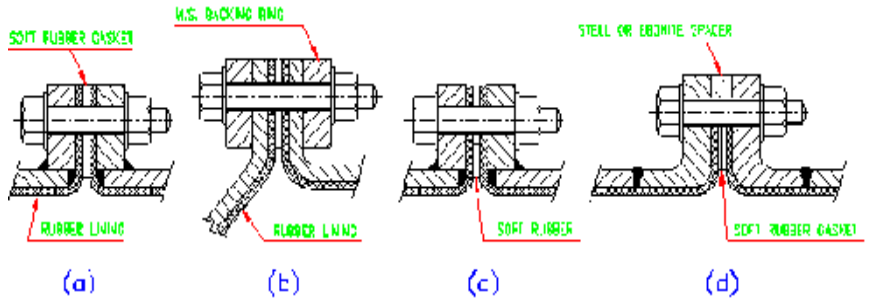

FIG. 11

6. NOTES:

6-1 : Any surface of the base metal to be lined should not be coated with paint or oil. However Red oxide zinc phosphate primer to IS 12744 (2 coats) will be applied for protection till lining of the surface

6-2 : Any surface of the base metal to be lined should not be galvanized.

6-3 : Although it is possible to line on various construction materials, carbon steel is most preferable as substrate. For cast materials special care should be taken to prevent blowholes or cavities.

7. INSPECTION PROCEDURE AND STANDARD FOR LINING PIPES:

Each pipe should be confirmed whether it is ready for rubber lining through checking dimensions, appearances and quality of weld etc. according to the drawings standard for lining.

If any obstacle is detected, repairing should be requested to the fabricator of pipes.

7.1 INSPECTION OF WELD ZONE:

a) Visual inspection:

Weld lines shall be free from weld cavity and spatters shall be completely removed. Under-cut shall be 0.3 mm or less.

Appearance shall be not unsightly.

b) Check Curved faces at corner :

Convex shall be 3 mm Radius at least, concave shall be 10 mm Radius at least.

c) Check height and width of weld bead :

Diameter 550 mm or less :	Diameter 600 mm or larger :
Height - 0.1 ~ 0.2 mm	Height - 1.0 ~ 1.5 mm
Width - 1.5 ~ 2.0 mm	Width - not specified

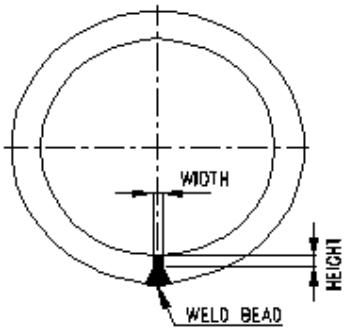

d) Check finish of bead end:

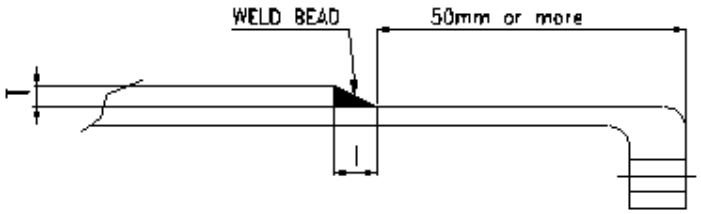

e) Check butt joint when plates of different thickness is used:

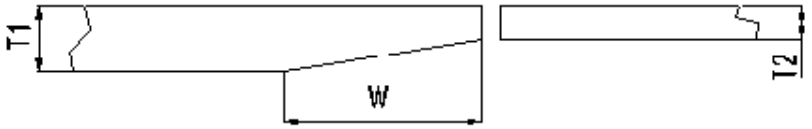

W = ($T_1 - T_2$) x 10 mm or longer

7-2 Visual inspection:

The flange faces to be lined shall be free from disadvantages irregularity.

7-3 Dimensional inspection:

a) Tolerance of length of pipes, bends and tees :

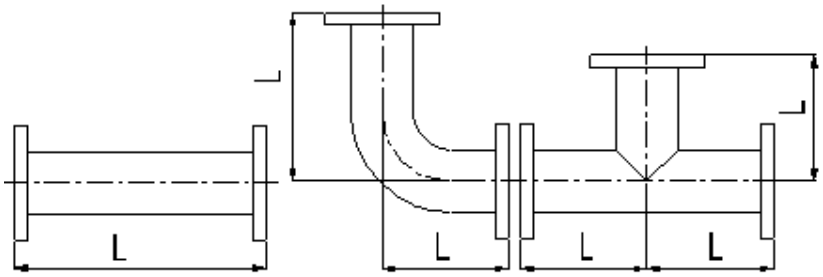

1 = + 0, - 3 (for length of 1000 mm and less)
1 = + 0, - 3 (for length over 1000 mm)

b) Inclination of flange:

A = ± 1/2º
B = max. 5 mm

c) misalignment of bolt holes :

A = ± 1.5 mm

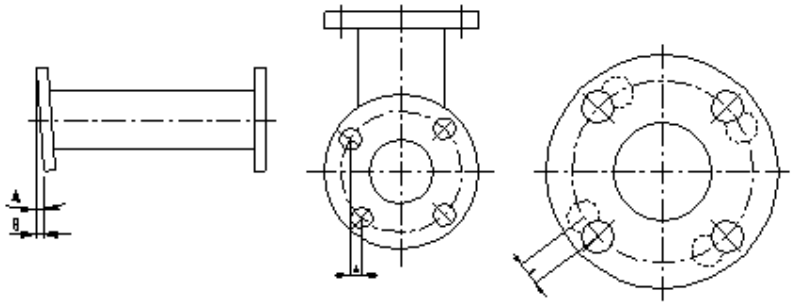

It should be noted that some tanks designed for operation, in vertical position, are to be handled in horizontal position during the various stages of lining. Hence, such vessels should be designed accordingly.

During operation of some rubber lined tanks, such as hydrochloric acid, the fumes / mist emanating out of the tank, tend to corrode the external surface especially at the roof. It may be advisable to provide rubber lining externally especially around the vent nozzles. In such of the tanks, sometimes due to overflow etc. corrosion occurs at the bottom kerbs, also the corrosive medium goes below the surface of the bottom plate. Care must be taken by suitable design to prevent such situations.

In large size tanks, piping, process equipment, suitable lifting lugs should be provided.

If the vessels, pipes require external hot / cold insulation, the steel cleat for holding the insulation should be welded before handing over the fabricated item for rubber lining.

Note:

1. In addition to above, Surface preparation, application including drying & curing of rubber / VE Glass Fake lining, packaging, storage, Inspection etc. shall be as ensured as recommended by OEM's of these lining.

SECTION-II, SUB-SECTION- B

(FORMAT FOR O& M MANUAL)

Check List for Operation & Maintenance Manual

Project name:

Project number:

Package Name:

Sl.no. & Sections	Description	Yes	No	Not Applicable	Remarks
1.	Cover page				
1.1	Project Name				
1.2	Customer Name				
1.3	Name of Package				
1.4	Supplier details with phone, FAX email address				
1.5	Name and sign of prepared by , checked by & approved by				
2.0	Index				
2.1	showing the sections & related page nos All the pages should be numbered section wise				
3.0	Description of Plant				
3.1	Description /write up of operating principle of system equipment/ associated sub-systems & accessories/controls system , operating conditions, performance parameters under normal , start up and special cases				
3.2	Equipment list and basic parameter with Tag numbers				
3.3	Data sheets approved by Customer/for information and catalogues provided by original manufacturer				
3.4	Associated other packages and Interface /terminal points				
3.5	P&ID & Process Diagrams				
3.6	GA Layout drawings, As-built drawings				
3.7	Single line/wiring diagrams				
3.8	Control philosophy /control write-ups				
4.0	Commissioning Activities (if not covered in separate document i.e. erection manual, commissioning manual)				
4.1	Pre-Commissioning Checks				
4.2	Transportation and handling at site				
4.3	Storage at site				
4.4	Unpacking & Installation procedure				
5.0	Operation Guidelines for plant personal/user/operator				
5. 1	Interlock & Protection logic along with the limiting values of protection settings for the				

	equipment along with brief philosophy behind the logic, drawings etc. to be provided.				
5. 2	Start up and shut down procedure for equipments along with the associated systems in step by step mode. Valve sequence chart, step list, interlocks etc with Equipment isolating procedures to be mentioned.				
5. 3	Do's & Don't of the equipments.				
5. 4	Safety precautions to be taken during normal operation. Safety symbols, Emergency instructions on total power failure condition/lubrication failure/any other condition				
5. 5	Parameters to be monitored with normal values and limiting values				
5. 6	Trouble shooting with causes and remedial measures				
5. 7	Routine operational checks, recommended logs & records				
5. 8	Changeover schedule if more than one auxiliary for the same purpose is given				
5. 9	Painting requirement and schedule				
5. 10	Inspection, repair , Testing and calibration procedures				
6.0	Maintenance guidelines for plant personal				
6.1	List of Special Tools and Tackles required for Overhaul/Trouble shooting including special testing equipment required for calibration etc.				
6.2	Stepwise dismantling and re-assembly procedure clearly specifying the tools to be used, checks to be made, records to be maintained, clearances etc. to be mentioned. Tolerances for fitment of various components to be given.				
6.3	Preventive Maintenance & Overhauling schedules linked with running hours/calendar period along with checks to be given				
6.4	Long term maintenance schedules especially for structural, foundations etc.				
6.5	Consumable list along with the estimated quantity required during commissioning, normal running and during maintenance like Preventive Maintenances and Overhaul.				
6.6	List of lubricants with their Indian equivalent, Lubrication Schedule, Quantity required for each equipment for complete replacement is to be given				

6.7	List of vendors & Sub-vendors with their latest addresses, service centres ,Telephone Nos., Fax Nos., Mobile Nos., e-mail IDs etc.				
6.8	List of mandatory and recommended spare parts list				
6.9	Tentative Lead time required for ordering of spares from the equipment supplier				
6.10	Guarantee and warranty clauses				
7.0	Statutory and other specific requirements considerations.				

SECTION-II, SUB-SECTION- C

SITE STORAGE AND PRESERVATION MANUAL

SITE STORAGE AND PRESERVATION GUIDELINES

FOR

MECHNANICAL BOPs

(Doc No: PE-DC-SSG-A001 REV.00)

PROJECT ENGINEERING MANAGEMENT, POWER SECTOR

BHARAT HEAVY ELECTRICALS LIMITED-NOIDA

CONTENT

1 SCOPE OF THE DOCUMENT

2 PURPOSE OF STORAGE & PRESERVATION

3 MEASURES TO BE TAKEN FOR STORAGE AND PRESERVATION

a) GENERAL STORAGE REQUIREMENTS

b) GENERAL PRESERVATION REQUIREMENTS

c) GENERAL INSPECTION REQUIREMENTS

4 TYPE OF STORAGE FOR VARIOUS EQUIPMENT

5. CONCLUSION

6. STACKING ARRANGEMENT FOR PLATES AND STRUCTURAL STEEL

1. SCOPE OF THE DOCUMENT

This guideline is prepared in intent to provide proper site storage and preservation of the Mechanical, Electrical and C & I items / equipment supplied under various bought out packages/items. This storage procedure shall be followed at different power plant sites by concerned agency for storage and preservation from the date of equipment received at site until the same are erected and handed over to the customer.

2. PURPOSE OF STORAGE & PRESERVATION

Many of the items may be required to be kept in stores for long period. It shall therefore be essential that proper methods of storage and preservation be applied so that items do not deteriorate, loose some of their properties and become unusable due to atmospheric conditions and biological elements.

3. MEASURES TO BE TAKEN FOR STORAGE, HANDLING & PRESERVATION

a) GENERAL STORAGE REQUIREMENTS

1. To the extent feasible, materials should be stored near the point of erection. The storage areas should have adequate unloading and handling facilities with adequate passage space for movement of material handling equipment such as cranes, fork lift trucks, etc. The storage of materials shall be properly planned to minimise time loss during retrieval of items required for erection.
2. The outdoor storage areas as well as semi-closed stores shall be provided with adequate drainage facilities to prevent water logging. Adequacy of these facilities shall be checked prior to monsoon.
3. The storage sheds shall be built in conformity with fire safety requirements. The stores shall be provided with adequate lights and fire extinguishers. ‘No smoking’ signs shall be placed at strategic locations. Safety precautions shall be strictly enforced.
4. Adequate lighting facility shall be provided in storage areas and storage sheds and security personnel positioned to ensure enforcement of security measures to prevent theft and loss of materials.
5. Adequate number of competent stores personnel and security staff shall be deployed to efficiently store and maintain the equipment / material.
7. The equipment shall be stored in an orderly manner, preserving their identification slips, tags and instruction booklets, etc., required during erection. The storage of materials shall be equipment-wise. Loose parts shall be stored in sheds on racks,

preserving the identification marks and tags in good condition. The group codes shall be displayed on the racks

6. At no time shall any materials be stored directly on ground. All materials shall be stored minimum 200 mm above the ground preferably on wooden sleepers

b) GENERAL PRESERVATION REQUIREMENTS

1. All special measures to prevent corrosion shall be taken like keeping material in dry condition, avoiding the equipment coming in contact with corrosive fluid like water, acid etc.
2. Materials which carry protective coating shall not be wrapped in paper, cloth, etc., as these are liable to absorb and retain moisture. The material shall be inspected and in case of signs of wear or damages to protective coating, that portion shall be cleaned with approved solution and coated with an approved protective paint. Complete record of all such observations and protective measures taken shall be maintained.
3. Generally equipment supplied at site are properly greased or rust protective oil is applied on machined/ fabricated components. However periodic inspection shall be carried out to ensure that protection offered is intact.
4. While handling the equipment, no dragging on the ground is permitted. Avoid using wire rope for lifting coated components. Use polyester slings (if possible) otherwise protective material (e.g. clothes, wood block etc.) should be used while handling the components with rope / slings
5. For Equipment supplied with finished paint, touch paint shall be done in case any surface paint gets peeled off during handling. Otherwise such surfaces shall necessarily be wrapped with polythene to avoid any corrosion. Further for equipment wherein finish coat is to be applied at site, site to ensure that equipment is received with primer coat applied.
6. It shall be ensured by periodic inspection that plastic inserts are intact in tapped holes, wherever applicable.
7. Pipes shall be blown with air periodically and it shall be ensured that there is no obstruction.
8. Silica gel or approved equivalent moisture absorbing material in small cotton bags shall be placed and tied at various points on the equipment, wherever necessary.
9. Heavy rotating parts in assembled conditions shall be periodically rotated to prevent corrosion/jamming due to prolonged storage.

10. All the electrical equipment such as motors, generators, etc. shall be tested for insulation resistance at least once in three months and a record of such measured insulation values shall be maintained.

11. Following preservatives/preservation methods can be used depending upon type of equipment

    a. Rust preventive fluid (RPF)

    b. Rust protective paints

    c. Tarpaulin covers, in case of outdoor storage

    d. De-oxy aluminate for weld-ments

c) GENERAL INSPECTION REQUIREMENTS

1. Period inspection of materials with specific reference to –

    - Ingress of moisture and corrosion damages.
    - Damage to protective coating.
    - Open ends in pipes, vessels and equipment -
        - In case any open ends are noticed, same shall be capped.

2. Any damages to equipment / materials.

    - In case of any damages, these shall be promptly notified and in all cases, the repairs / rectification shall be carried out.
    - Any items found damaged or not suitable as per project requirements shall be removed from site. If required to store temporarily, they shall be clearly marked and stored separately to prevent any inadvertent use.

4. TYPE OF STORAGE FOR VARIOUS EQUIPMENT

The types of storage are broadly classified under the following heads:

i **Closed storage with dry and dust free atmosphere**. (C)

The closed shed can be constructed by using cold-rolled / tubular components for structure and corrugated asbestos sheets / galvanised iron sheets for roofing. Brick walls / asbestos sheets can be used to cover all the sides. The floor of the shed can be finished with plain cement concrete suitably glazed. The shed shall be provided with proper ventilation and illumination.

ii **Semi-closed storage**. (S)

The semi closed shed can be constructed by using cold-rolled / tubular components for structure and corrugated / asbestos sheets for roofing. The floor shall be brick paved. If required a small portion of sides can be covered to protect components from rainwater splashing onto the components.

iii Open storage (O)

The open yard shall be levelled, well consolidated to achieve raised ground with the provision of feeder roads for crane approach along with access roads running all sides. One part of the open yard shall be stone pitched, levelled and consolidated with raised ground suitable for storing / stacking heavier and critical components with due space to handle them by cranes etc . Adequate number of sleepers, concrete block etc. to be provided to make raised platforms to stack critical materials.

A separate yard to be identified as “scrap yard” slightly away from main open yard to store wooden/steel scraps, which are to be disposed off. This is required to avoid mix up with regular components as well as to avoid fire hazard.

Some of the components, which are having both machined & un-machined surfaces and are bulky, shall be stored in open storage area on a raised ground and suitably covered with water proof / fire retardant tarpaulin.

The equipment listed below shall be stored and inspected as per requirement mentioned in the table below.

Sl. No.	Description of the equipment	Type of Storage	Check for	Remarks
Raw material /mechanical items like pipes, plates, structure sections etc.)				
1.	Steel pipes (lined/unlined)	S	Damage , paint, corrosion, rubber lining peeling	Provide end cap
2.	MS Plates	S	Damage, paint, corrosion	
3.	SS Plates	S	Damage	
4.	Non-metallic pipes	S	Damage, cracks	Provide end cap
5.	Stainless steel pipes	S	Damage ,	Provide end cap
6.	MS sections, beams	S	Damage, paint, corrosion	
7.	Cable trays	S	Damage, condition of preservations	
8.	Insulation sheets	S	Damage	
9.	Insulation	C	Damage, packing	
10.	Hangers Rods	S	Damage, paint, packing	
11.	Tubes	S	Damage, paint , packing	Provide end cap
12.	Hume pipes	O	Damage	
13.	Castings	O	Damage, paint, corrosion	
Fabricated mechanical items (pressure vessels, tanks etc.)				
14.	Pressure vessels (unlined)	O	Damage, paint, corrosion,	Covered nozzles
15.	Atmospheric storage tanks (unlined)	O	Damage, paint, corrosion	Covered nozzles

Sl. No.	Description of the equipment	Type of Storage	Check for	Remarks
16.	Pressure vessels (lined)	S	Damage, paint, corrosion, rubber lining	
17.	Atmospheric storage tanks(lined)	S	Damage, paint, corrosion, rubber lining	
18.	Support structures	O	Damage , paint, corrosion	
19.	Flanges	C	Damage , paint, corrosion	
20.	Fabricated pipes	S	Damage , paint, corrosion	Provide end cap
21.	Vessels internals	C	Damage , paint, corrosion ,packing	
22.	Grills	S	Damage , paint, corrosion	
23.	Angles	S	Damage , paint, corrosion	
24.	Bridge mechanism/clarifier mechanism	O	Damage , paint, corrosion	
25.	Cranes, rails	S	Damage , paint, corrosion	
26.	Stair cases	O	Damage , paint, corrosion	
27.	Ladders/handrails	O	Damage , paint, corrosion	
28.	Fabricated ducts	S	Damage , paint, corrosion	
29.	Isolation Gates	O	Damage , paint, corrosion	
30.	Fabricated boxes/panels	S	Damage , paint, corrosion	
Mechanical components like valves, fittings, cables glands, spares etc.)				
31.	Valves	S	Damage , packing	

Sl. No.	Description of the equipment	Type of Storage	Check for	Remarks
32.	Fittings	S	Damage , packing	Provide end cap
33.	Cable glands	C	Damage , packing	
34.	Tools & tackles	C	Damage , packing	
35.	Nut , bolts, washers,	C	Damage , packing	
36.	Gasket & Packings	C	Damage , packing	
37.	Copper tubes	C	Damage , packing, corrosion	Provide end cap
38.	SS tubing	C	Damage , packing	Provide end cap
Rotating assemblies (pumps, blowers, stirrers, fans, compressors etc.)				
39.	Pumps	S	Damage , packing, corrosion	Shaft rotation
40.	Blowers/Compressors	S	Damage , packing, corrosion	Shaft rotation
41.	Agitators/stirrers/radial launders	C	Damage , packing, corrosion	Shaft rotation
42.	Rollers for chlorine tonner mounting	C	Damage , packing, corrosion	
43.	Centrifuge	S	Damage , packing,	
44.	Gear box	C	Damage , packing, corrosion	
45.	Bearings	C	Damage , packing, corrosion	
46.	Fans	S	Damage , packing, corrosion	
47.	Dosing skids	S	Damage , packing, corrosion	
48.	Pump assemblies	S	Damage , packing, corrosion	
49.	Air washers(INTERNALS)	S	Damage , packing	
50.	Air conditioners (split)	C	Damage , packing	

Sl. No.	Description of the equipment	Type of Storage	Check for	Remarks
51.	Elevators(CONTAINERIZED)	O	Damage , packing, corrosion	
52.	Chillers/VA machines	S	Damage , packing	
53.	Air handling Unit/Package unit	S	Damage , packing	
54.	Chlorinators & Evaporators	C	Damage , packing	
55.	Ejectors	C	Damage , packing	
56.	Electrolyser	C	Damage , packing	
Miscellaneous items like chain pulley blocks, hoists etc.				
57.	Chain pulley blocks	S	Damage, Packing	
58.	Electric hoists	S	Damage, Packing	
59.	Fire extinguishers	C	Damage, expiry date	
60.	Fork Lift Truck	S	Damage, Packing	
61.	Hydraulic Mobile Crane	O	Damage, Packing	
62.	Mobile Pick Up & Carry Crane	O	Damage, Packing	
63.	Motor boats	O	Damage, Packing	
64.	Safety showers	S	Damage, Packing	
65.	Diffusers/dampers	S	Damage, Packing	
Chemicals and consumables (acid, alkali, paints, oils, reagents and special chemicals)				
66.	Hydro Chloric Acid (HCl)	Store in canes/ storage tank in dyke area	Date of production/ leakage/fumes	hazardous chemical
67.	Sulphuric acid (H_2SO_4)	Store in canes/ storage tank in dyke area	Date of production/ leakage/fumes	hazardous chemical

Sl. No.	Description of the equipment	Type of Storage	Check for	Remarks
68.	Sodium hydroxide (NaOH)	Store in canes/ storage tank in dyke area	Date of production/ leakage/ fumes/ breather	hazardous chemical ,breather to be checked for air ingress
69.	Sodium hypo chlorite	To be stored under shed	Date of production/ leakage/ fumes	hazardous chemical ,self-life normally 15-30 days after which strength of chemical decays
70.	Ammonia	S	Date of production/ leakage/ fumes	Store in closed storage tanks, hazardous chemical
71.	CW treatment chemicals	S	Date of production , Self-life	Store in closed canes
72.	RO/UF cleaning chemicals	S	Date of production , Self-life	Store in closed canes
73.	Lime	C	Damage to packing , seepage	Prevent moisture, rain
74.	Alum bricks	C	Damage to packing	Prevent moisture, rain
75.	Poly electrolyte	S		Store in closed storage tanks
76.	Laboratory chemicals(powder)	C	Damage, Packing self-life	
77.	Laboratory chemicals(liquid)	C	Damage, Packing self-life	
78.	Lubrication oils	C	Leakage	
79.	Paints	S	Leakage ,air tightness	
80.	Sand	O	Damage of packing	No hooks
81.	Salt (NaCl)	C	Damage of packing, water ingress	Prevent moisture, rain
82.	Anthracite	S	Damage of packing	
83.	Activated carbon	S	Damage of packing	

Sl. No.	**Description of the equipment**	**Type of Storage**	**Check for**	**Remarks**
84.	Thermal insulation	S	Damage of packing	
85.	Cement	C	Damage of packing	Prevent moisture, rain
86.	Gravels	O	Damage of packing	
87.	ION exchange resins	C	Damage , packing	Refer manufacturer guidelines
88.	RO membranes	C	Damage , packing	Refer manufacturer guidelines
89.	UF membranes	C	Damage , packing	Refer manufacturer guidelines
90.	Cleaning chemicals	C	Damage , packing	Refer manufacturer guidelines
91.	Chemicals for analysers/calibration	C	Damage , packing	Refer manufacturer guidelines
Electrical and C & I items (motors, cables etc.)				
92.	Motors	C	Damage , packing	
93.	Cable drums	O	Damage	
94.	Control Panel /control desk, UPS ,JB	S	Damage, Packing	
95.	Instruments(gauges/analysers)	C	Damage	
Special items		As per Manufacturer's item, like Hydrogen cylinders, Ozonator, Analyser, Chlorine dioxide generators etc.		

5. CONCLUSION

Concerned storage agency at site should make sure that loss in equipment performance and wear & tear are minimised through proper storage and preservation. The above are broad guidelines and cover major equipment / materials. However specific storage practices shall be followed as per manufacturer recommendation. All the necessary measures even in addition to the ones mentioned above, if found necessary, should be taken to achieve the objective.

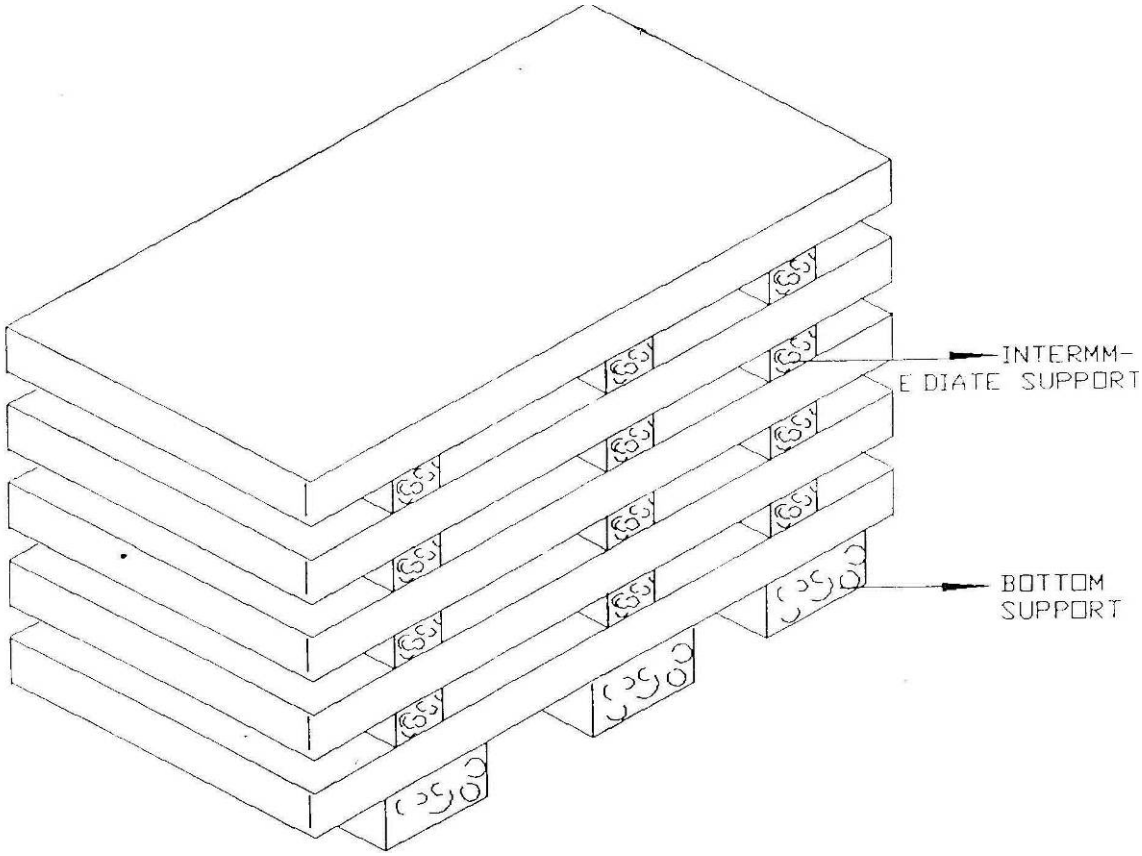

Figure – 1 – PLATE STACKING ARRANGEMENT

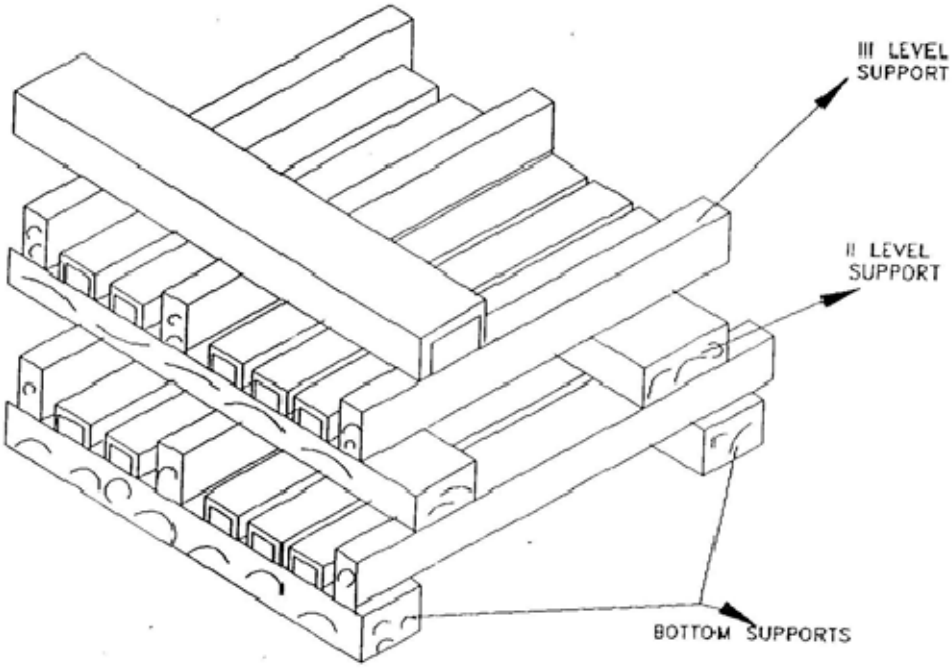

Figure – 2 – STRUCTURAL STEEL STACKING ARRANGEMENT

SECTION-III

	TITLE: 4X210MW+3X500 MW KAHALGAON STPP TECHNICAL SPECIFICATIONS FOR MISCELLANEOUS FGD TANKS	SPECIFICATION No: PE-TS-481-167-A101
		SECTION : III
		ANNEXURE-1
		REV: 00
		Date:

BIDDER SHOULD SUBMIT THE SIGNED AND STAMPED COPY OF THE FOLLOWING DOCUMENTS:

1. Compliance cum confirmation certificate (refer annexure-2 of section-III)
2. Pre-bid clarification schedule as per format given under Section-III (Annexure-3), in case of any clarifications.
3. Deviation schedule as per format given under Section-III (Annexure-4), in case of any deviations by bidder.
4. Un priced format for main package (mentioning quoted against each item)
5. Un priced format for Tools and Tackles (mentioning quoted against each item)
6. Un priced format for Commissioning spare (mentioning quoted against each item)
7. List of makes of sub vendor items (refer annexure-6 of section-III)
8. FGD Tanks Schedule & GA Drawing (Typical) with Agitator Platform (refer annexure-8 of section-III)

	TITLE: 4X210MW+3X500 MW KAHALGAON STPP TECHNICAL SPECIFICATIONS FOR MISCELLANEOUS FGD TANKS	SPECIFICATION No:PE-TS-481-167-A101
		SECTION : III
		ANNEXURE-2
		REV. NO. 00
		Date:

COMPLIANCE CUM CONFIRMATION CERTIFICATE

The bidder shall confirm compliance with following by signing / stamping this compliance certificate (every sheet) and furnish same with the offer.

a) The scope of supply, technical details, construction features, design parameters etc. shall be as per technical specification & there are no exclusions, other than those mentioned under "exclusion and those resolved as per 'Schedule of Deviations', with regard to same.

b) There are no other deviations w.r.t. specifications other than those furnished in the 'Schedule of Deviations'. Any other deviation, stated or implied, taken elsewhere in the offer stands withdrawn unless specifically brought out in the 'Schedule of Deviations'

c) Bidder shall submit QP in the event of order based on the guidelines given in the specification & QP enclosed therein. QP will be subject to BHEL / CUSTOMER approval & customer hold points for inspection / testing shall be marked in the QP at the contract stage. Inspection / testing shall be witnessed as per same apart from review of various test certificates/ Inspection records etc. This is within the contracted price without any extra implications to BHEL after award of the contract.

d) All drawings/ data-sheets / calculations etc. submitted along with the offer shall not be taken cognizance off.

e) The offered materials shall be either equivalent or superior to those specified in the specification & shall meet the specified / intended duty requirements. In case the material specified in the specifications is not compatible for intended duty requirements then same shall be resolved by the bidder with BHEL during the pre-bid discussions, otherwise BHEL / Customer's decision shall be binding on the bidder whenever the deficiency is pointed out.

For components where materials are not specified, same shall be suitable for intended duty, all materials shall be subject to approval in the event of order.

f) The commissioning spares shall be supplied on 'As Required Basis' & prices for same included in the base price itself.

g) All sub vendors shall be subject to BHEL / CUSTOMER approval in the event of order.

h) Guarantee for plant/equipment shall be as per relevant clause of GCC / SCC / Other Commercial Terms & Conditions

i) In the event of order, all the material required for completing the job at site shall be supplied by the bidder within the ordered price even if the same are additional to approved billing break up, approved drawing or approved Bill of quantities within the scope of work as tender specification. This clause will apply in case during site commissioning, additional requirements emerges due to customer and / or consultant's comments. No extra claims shall be put on this account

j) Schedule of drawings submissions, comment incorporations & approval shall be as stipulated in the specifications. The successful bidder shall depute his design personnel to BHEL's / Customer's / Consultant's office for across the table resolution of issues and to get documents approved in the stipulated time.

k) As built drawings shall be submitted as and when required during the project execution.

l) The bidder has not tempered with this compliance cum confirmation certificate and if at any stage any tempering in the signed copy of this document is noticed then same shall be treated as breach of contract and suitable actions shall be taken against the bidder.

m) Successful bidder shall furnish detailed erection manual for each of the equipment supplied under this contract at least 3 months before the scheduled erection of the concerned equipment / component or along with supply of concerned equipment / component whichever is earlier.

n) Document approval by customer under Approval category or information category shall not absolve the vendor of their contractual obligations of completing the work as per specification requirement. Any deviation from specified requirement shall be reported by the vendor in writing and require written approval. Unless any change in specified requirement has been brought out by the vendor during detail engineering in writing while submitting the document to customer for approval, approved document (with implicit deviation) will not be cited as a reason for not following the specification requirement.

o) In case vendor submits revised drawing after approval of the corresponding drawing, any delay in approval of revised drawing shall be to vendor's account and shall not be used as a reason for extension in contract completion.

PRE-BID CLARIFICATION SCHEDULE

S.No.	Section/Clause/ Page No.	Statement of the referred clause	Clarification required

The bidder hereby certifies that above mentioned are the only clarifications required on the technical specification for the subject package.

SIGNATURE: _____

NAME : _____

DESIGNATION: _____

COMPANY: _____

DATE: _____

COMPANY SEAL

DEVIATION SHEET (COST OF WITHDRAWL)

PROJECT:-4X210MW +3X500MW KAHALGAON STPP FGD

PACKAGE:- MISC. FGD TANKS

TENDER ENQUIRY REFERENCE:-

NAME OF VENDOR:-

SL NO	VOULME/ SECTION	PAGE NO.	CLAUSE NO.	TECHNICAL SPECIFICATION/ TENDER DOCUMENT	COMPLETE DESCRIPTION OF DEVIATION	COST OF WITHDRAWL OF DEVIATION	REFERENCE OF PRICE SCHEDULE ON WHICH COST OF WITHDRAWL OF DEVIATION IS APPLICABLE	NATURE OF COST OF WITHDRAWL OF DEVIATION (POSITIVE/ NEGATIVE)	REASON FOR QUOTING DEVIATION
TECHNICAL DEVIATIONS									
COMMERCIAL DEVIATIONS									

PARTICULARS OF BIDDERS/ AUTHORISED REPRESENTATIVE

NAME	**DESIGNATIONS**	**SIGN & DATE**	

NOTES:

1. For self manufactured items of bidder, cost of withdrawl of deviation will be applicable on the basic price (i.e. excluding taxes, duties & freight) only.
2. For directly dispatchable items, cost of withdrawl of deviation will be applicable on the basic price including taxes, duties & freight.
3. All the bidders have to list out all their Technical & Commercial Deviations (if any) in detail in the above format.
4. Any deviation not mentioned above and shown separately or found hidden in offer, will not be taken cognizance of.
5. Bidder shall submit duly filled unpriced copy of above format indicating "quoted" in "cost of withdrawl of deviation" column of the schedule above along with their Techno-commercial offer, wherever applicable.
6. Bidder shall furnish price copy of above format along with price bid.
7. The final decision of acceptance/ rejection of the deviations quoted by the bidder shall be at discretion of the Purchaser.
8. Bidders to note that any deviation (technical/commercial) not listed in above and asked after Part-I opening shall not be considered.
9. For deviations w.r.t. Payment terms, Liquidated damages, Firm prices and submission of E1/ E2 forms before claiming 10% payment, if a bidder chooses not to give any cost of withdrawl of deviation loading as per Annexure-VIII of GCC will apply. For any other deviation mentioned in un-priced copy of this format submitted with Part-I bid but not mentioned in priced copy of this format submitted with Priced bid, the cost of withdrawl of deviation shall be taken as NIL.
10. Any deviation mentioned in priced copy of this format, but not mentioned in the un-priced copy, shall not be accepted.
11. All techno-commercial terms and conditions of NIT shall be deemed to have been accepted by the bidder, other than those listed in unpriced copy of this format.
12. Cost of withdrawl is to be given seperately for each deviation. In no event bidder should club cost of withdrawl of more than one deviation else cost of withdrawl of such deviations which have been clubbed together shall be considered as NIL.
13. In case nature of cost of withdrawl (positive/negative) is not specified it shall be assumed as positive.
14. In case of descrepancy in the nature of impact (positive/ negative), positive will be considered for evaluation and negative for ordering.

	TITLE: 4X210MW+3X500 MW KAHALGAON STPP TECHNICAL SPECIFICATIONS FOR MISCELLANEOUS FGD TANKS	SPECIFICATION NO. PE-TS-481-167-A101 SECTION : III ANNEXURE :5 REV 00 Date:

LIST OF MAKES OF ITEMS

S.N.	ITEM NAME	MANUFACTURER	LOCATION

	TITLE: 4X210MW+3X500 MW KAHALGAON STPP TECHNICAL SPECIFICATIONS FOR MISCELLANEOUS FGD TANKS	SPECIFICATION NO. PE-TS-481-167-A101
		SECTION : III
		ANNEXURE-6
		REV 00
		Date:

TOOLS AND TACKLES

Bidder shall supply a set of special tools and tackles required either for erection or operation or maintenance of the Tanks units. A list of such tools and tackles shall be submitted along with the offer.

SECTION- III, ANNEXURE-7

4X210MW +3X500MW KAHALGAON STPP FGD- MISC. FGD TANKS PACKAGE
LIST OF COMMISSIONING SPARES (Required for Commissioning of Misc. FGD Tanks

Break up price for COMMISSIONING SPARES

Sl. no	Description	Qty.	Unit
1	CAF Gasket of each size	2 nos.	
2	Nuts, bolts & washers of each size (nos. of bolts, nuts & washers as required for each nozzle) as per approved Drg.	1 lot	
3	Any other item required for successful commissioning of the tanks including rubber lining & VE Glass Flake lining (to be specified clearly by bidder)	1 lot	

NOTE -

1. The items indicated in the above list are minimum. Any other spares if required shall be included by bidder in the above list.

2. Bidder shall furnish unit price of commissioning spares in above format alongwith the Bid. Any part even though not mentioned in list furnished but required at later date shall be supplied free of cost.

3.Bidder to note that the items indicated in the above list shall be provided prior to commissioning of the Misc FGD Tanks. Further, items indicated in the list shall be supplied over and above the consummables that is supplied along with the Misc FGD Tanks prior to start up.

TANK SCHEDULE (Signed and Stamped copy to be sumbmitted with the offer by Bidder)

Sl.no.	Description	Primary Hydrocyclone feed tank	Filtrate water tank	Secondary Hydrocyclone feed tank	Waste water Tank	Limestone Slurry Storage tank	Auxiliary Absorbent Tank	Process Water tanks	Belt filter wash tank	Cake wash(clarified water) tank	Absorber Area Drain Pit	Gypsum Area Drain Pit	Limestone Area Drain Pit
1	**Tank Sl No.**	1	2	3	4	5	6	7	8	9	10	11	12
2	**Type of agitator**	Vertical Type – (Center Mounted)	Vertical Type – (Center Mounted)	Vertical Type – (Center Mounted)	Vertical Type – (Center Mounted)	Vertical Type – (Center Mounted)	Marine Propeller – Horizontal Type (Side Entry),	Not applicable	Not applicable	Not applicable	Vertical Type – (Center Mounted)	Vertical Type – (Center Mounted)	Vertical Type – (Center Mounted)
3	**Medium to be handled**	Gypsum slurry	Gypsum slurry	Gypsum slurry	Gypsum slurry	Limestone slurry	Gypsum slurry	Process Water	Process Water	Process Water	Gypsum slurry	Gypsum slurry	Gypsum slurry
4	**Agitator Location**	Outdoor	Outdoor	Outdoor	Outdoor	Outdoor	Outdoor	Not applicable	Not applicable	Not applicable	Outdoor	Outdoor	Outdoor
5	**Agitator Operation**	Continuous	Continuous	Continuous	Continuous	Continuous	Whenever FGD is under maintenance	Not applicable	Not applicable	Not applicable	Continuous	Continuous	Continuous
6	**Tank details**												
a)	Tank Shape	Vertical cylindrical	Vertical cylindrical	Vertical cylindrical	Vertical cylindrical	Vertical cylindrical	Vertical cylindrical	Vertical cylindrical	Vertical cylindrical	Vertical cylindrical	Rectangular (RCC sump)	Rectangular (RCC sump)	Rectangular (RCC sump)
b)	Tank Material	IS:2062 E250 GR.BR	IS:2062 E250 GR.BR	IS:2062 E250 GR.BR	IS:2062 E250 GR.BR	IS:2062 E250 GR.BR	IS:2062 E250 GR.BR	IS:2062 E250 GR.BR	IS:2062 E250 GR.BR	IS:2062 E250 GR.BR	RCC (refer note-1)	RCC (refer note-1)	RCC (refer note-1)
c)	Tank/Sump Quantity (in No.)	1	1	1	1	2	1	2	2	2	5	1	1
	Capacity of Tank (in m3)												
e)	Capacity (Hold Volume)	Refer INPUT DRAWINGS OF TANKS ,ANNEXURE-III, SUB SECTION-D, SECTION-I											
f)	Capacity (Effective)												
	Dimension (in m)												
g)	Diameter	Refer INPUT DRAWINGS OF TANKS ,ANNEXURE-III, SUB SECTION-D, SECTION-I											
h)	Length	Refer INPUT DRAWINGS OF TANKS ,ANNEXURE-III, SUB SECTION-D, SECTION-I											
i)	Breadth	Refer INPUT DRAWINGS OF TANKS ,ANNEXURE-III, SUB SECTION-D, SECTION-I											
j)	Height *	Refer INPUT DRAWINGS OF TANKS ,ANNEXURE-III, SUB SECTION-D, SECTION-I (Refer note 4 for tank height)											
j)	Thickness	**Refer clause no 5.3(a) of SUB SECTION-C1-A, SECTION-I**											
7	**Quantity of Agitator per tank**	1	1	1	1	1	3 (Refer note-2)	Not applicable	Not applicable	Not applicable	1	1	1
8	**Total quantity of Agitators (for All units)**	1	1	1	1	2	3 (Refer note-2)	Not applicable	Not applicable	Not applicable	5	1	1
9	**Agitator Loads**												
a)	Static Load (per agitator assembly) (in Tonnes)	2.4	2.4	2.4	2.4	10.8	7 for each Agitator	Not applicable	Not applicable	Not applicable	0.9	0.9	0.9
b)	Dynamic load (per agitator assembly) (in Tonnes)	4.80	4.80	4.80	4.8	21.6	14 for each Agitator	Not applicable	Not applicable	Not applicable	2	2	2
10	**Tentative Nozzle size for Agitator (in NB)**	600	600	600	600	750	750	-	-	-	-	-	-
11	**Slurry Analysis**												
a)	Slurry to be handled	Gypsum slurry	Gypsum slurry	Gypsum slurry	Gypsum slurry	Limestone slurry	Gypsum slurry	Water	Water	Water	Gypsum slurry	Gypsum slurry	Limestone slurry
b)	Maximum solid particle size	200 mesh (74 µ)	6-7 mm	200 mesh (74 µ)	200 mesh (74 µ)	200 mesh (74 µ)	200 mesh (74 µ)	-	-	-	6-7 mm	6-7 mm	6-7 mm
c)	Normal solid particle size, d50	325 mesh (44 µ)	325 mesh (44 µ)	325 mesh (44 µ)	325 mesh (44 µ)	325 mesh (44 µ)	325 mesh (44 µ)	-	-	-	43 micron	43 micron	43 micron
d)	Solid to be handled	gypsum along with Limestone & other impurities	gypsum along with Limestone & other impurities	gypsum along with Limestone & other impurities	gypsum along with Limestone & other impurities	Limestone + impurities	gypsum along with Limestone & other impurities	-	-	-	gypsum along with Limestone & other impurities	gypsum along with Limestone & other impurities	Limestone + impurities

e)	Chloride concentration	max 25000 ppm	max 25000 ppm	max 25000 ppm	max 25000 ppm	max 1000 ppm	max 25000 ppm	-	-	-	max 25000 ppm	max 25000 ppm	max 1000 ppm
f)	Hardness of particle	5-7 mohs scale	5-7 mohs scale	5-7 mohs scale	5-7 mohs scale	5-7 mohs scale	5-7 mohs scale	-	-	-	5-7 mohs scale	5-7 mohs scale	5-7 mohs scale
g)	Slurry concentration, wt%	30 wt%	11%	16.60%	3%	30 wt%	30%	-	-	-	30%	30%	30 wt%
h)	Sp. Gravity of slurry	1.212	1.072	1.109	1.02	1.215	1.212	-	-	-	1.213	1.213	1.215
i)	Sp. Gravity of Lime Stone & Gypsum	2.32(avg)	2.32(avg)	2.32(avg)	2.32(avg)	2.32(avg)	2.32(avg)	-	-	-	2.32(avg)	2.32(avg)	2.32(avg)
j)	Viscosity of Slurry	10 cP	4 cP	4 cP	3 cP	30 cP	10 cP	-	-	-	10 cP	10 cP	30 cP
k)	pH	4 to 8	4 to 8	4 to 8	4 to 8	5 to 8	4 to 8	-	-	-	4 to 8	4 to 8	5 to 8
l)	SiO_2 Content	4 to 6 g/l	4 to 6 g/l	4 to 6 g/l	4 to 6 g/l	4 to 6 g/l	4 to 6 g/l	-	-	-	4 to 6 g/l	4 to 6 g/l	4 to 6 g/l
m)	Temperature	Normal -62 deg C; Design-70 deg C.	Normal -58 deg C; Design-70 deg C	Normal -62 deg C; Design-70 deg C.	Normal -62 deg C; Design-70 deg C.	Normal -45 deg C; Design-55 deg C.	Normal -62 deg C; Design-70 deg C.	36 deg C	Normal -58 deg C; Design- 70 deg C.	Normal -58 deg C; Design- 70 deg C.	Normal -62 deg C; Design-70 deg C.	Normal -62 deg C; Design-70 deg C.	Normal -45 deg C; Design-55 deg C.
12	**Process water Analysis**												
a)	Calcium as CaCO3	-	-	-	-	-	-	620	620	620	-	-	-
b)	Magnesium as CaCO3	-	-	-	-	-	-	380	380	380	-	-	-
c)	Chlorides as CaCO3	-	-	-	-	-	-	160	160	160	-	-	-
d)	Sulphate as CaCO3	-	-	-	-	-	-	276	276	276	-	-	-
e)	Alkalinity as CaCo3 (Bicarbonate)	-	-	-	-	-	-	1032	1032	1032	-	-	-
f)	Total Iron as Fe	-	-	-	-	-	-	1.2	1.2	1.2	-	-	-
g)	Total Silica as SiO2	-	-	-	-	-	-	48	48	48	-	-	-
h)	pH	-	-	-	-	-	-	8.8-9.2	8.8-9.2	8.8-9.2	-	-	-
i)	Turbidity as NTU	-	-	-	-	-	-	80	80	80	-	-	-
13	**Inside Lining of tank/sumps**												
a)	Lining specification / Painting specification of interior surface	Bromobutyl rubber lining with Shore A hardness as 55±5 and min 5 mm thickness as per Cl 10.00.00, sub section C2, Sec-I of specification.	Vinyl ester-based Glass Flake lining of min 3 mm thicknessas per Cl 10.00.00, sub section C2, Sec-I of specification.			Bromobutyl rubber lining with Shore A hardness as 55±5 and min 5 mm thickness as as per Cl 10.00.00, sub section C2, Sec-I of specification.		Epoxy lining of minimum 150 micron thickness (3 coats of 50 micron each)			Vinyl ester-based Glass Flake lining of min 3 mm thickness as per Cl 10.00.00, sub section C2, Sec-I of specification.		
14	Anchor Bolt(To be provided if required as per tank design calculation)	IS 1367 PART 3, CLASS 4.4	IS 1367 PART 3, CLASS 4.4	IS 1367 PART 3, CLASS 4.4	IS 1367 PART 3, CLASS 4.4	IS 1367 PART 3, CLASS 4.4	IS 1367 PART 3, CLASS 4.4	IS 1367 PART 3, CLASS 4.4	IS 1367 PART 3, CLASS 4.4	IS 1367 PART 3, CLASS 4.4	-	-	-
15	Mateial Specification	For material of construction for Plates, Structure, Pipes, Fitings, Flanges, Gasket, Anchor bolts amd Fasteners, refer Annexure-9, Section-III.											
16	Nozzles required on tanks	Refer Nozzle Schedule under Annexure - 10, Section -III											
Notes													
1	**The absorber area Drain Pit, Gypsum area Drain Pit, Limestone area Drain Pit is exluded from bidder scope of work. However ,lining of the same for mounting of free issue of a agitator in these pits also included in tank vendor's scope.**												
2	**The supply, erection and commissioning of the Glass flake lining within the pit shall be in bidder's scope. The erection of the agitators within the mentioned pits shall be in bidder's scope of work. The agitator for tanks and pits as mentioned above shall be free issued by BHEL. BHEL shall also arrange the supervision of Erection and commisssioning activity.**												
3	**For detailed scope of work refer the technical specification.**												
4	*** Height from HH level to tank top (free board) indicated is minimum. Any increase in free board in height required to meet codal requirement will be complied without any commercial implication.**												
5	**The outside surface of the tanks shall be coated with paint as approved by the BHEL/Customer.**												
6	**Agitator loads provided at S.N.9 above are for estimation purpose only. The final loads shall be furnished during detail engineering.**												
7	**The Nozzle sizes provided for Agitators at S.N. 10 are for estimation purpose only. The final nozzle sizes shall be furnihsed during detailed engineering and same shall be supplied without any commercial implications..**												

DRAWING NO. SKETCH-11

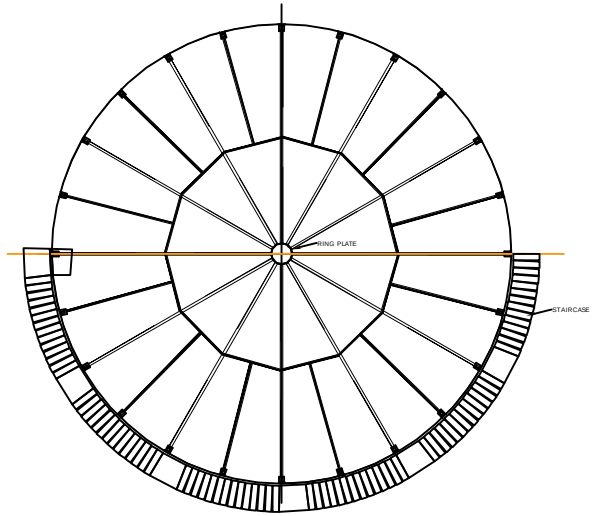

PLAN

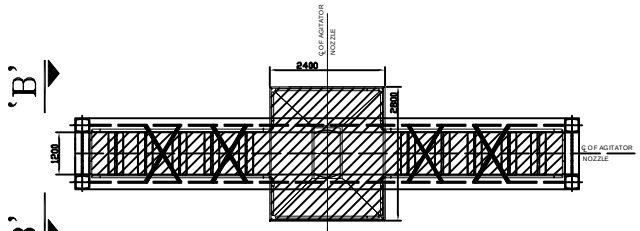

DETAILS OF PLATFORM FOR AGITATORS

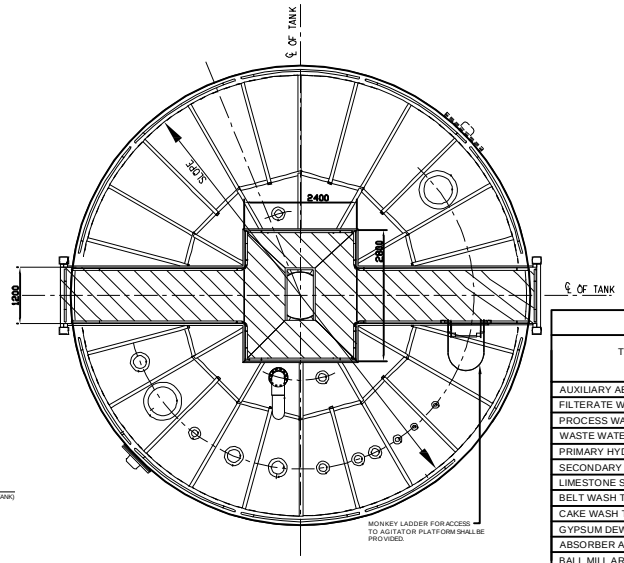

VIEW CC

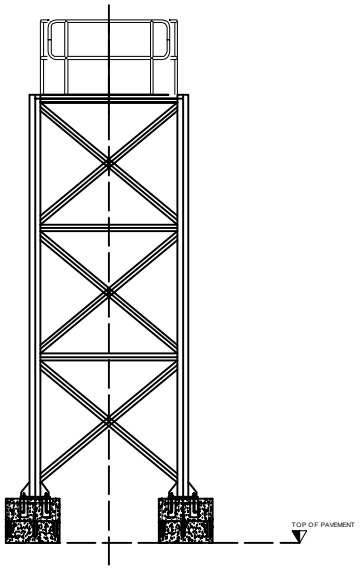

VIEW BB

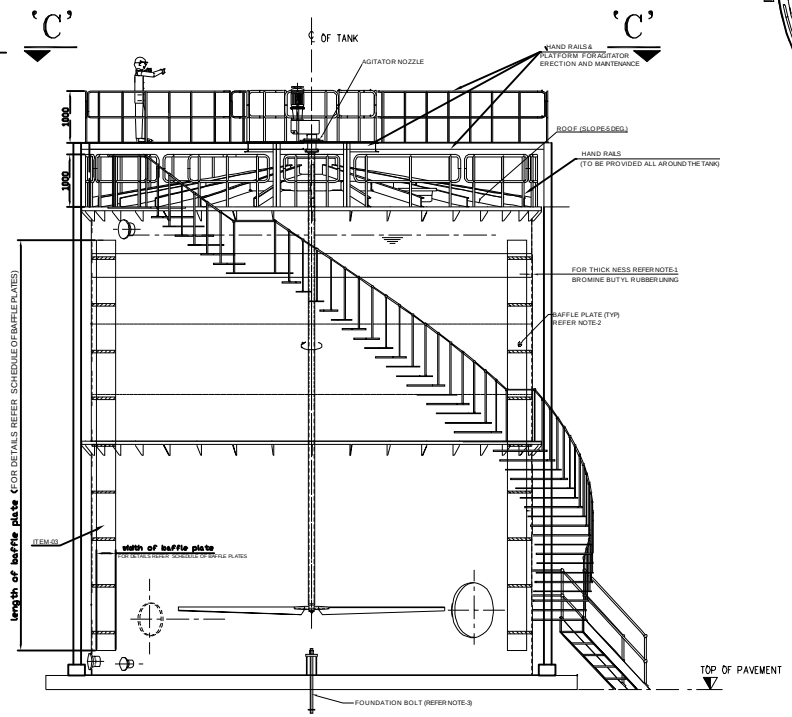

ELEVATION

SCHEDULE OF BAFFLE PLATES

TANK NAME	TANK DIA.(in M)	TANK HT.(in M)	BAFFLE PLATE DETAILS (All Dimensions in MM) (*)				REMARKS
			NOS./TANK	APPROX. LENGTH	APPROX. WIDTH	APPROX. THK.	
AUXILIARY ABSORBER TANK	12.0	12.9	-	-	-	-	BAFFLE PLATES NOT APPLICABLE
FILTERATE WATER TANK	5.0	5.3	04	4950	400	19	-
PROCESS WATER TANK	6.5	7.1	-	-	-	-	AGITATOR NOT APPLICABLE
WASTE WATER TANK	8.0	9.6	04	9000	640	19	-
PRIMARY HYDROCYCLONE TANK	6.5	7.05	04	6750	520	23	-
SECONDARY HYDROCYCLONE TANK	5.5	6.05	04	5850	440	22	-
LIMESTONE SLURRY STORAGE TANK	13	13.45	04	12600	1040	40	-
BELT WASH TANK	3.5	3.85	-	-	-	-	AGITATOR NOT APPLICABLE
CAKE WASH TANK	3.5	3.85	-	-	-	-	AGITATOR NOT APPLICABLE
GYPSUM DEWATERING AREA DRAIN PIT	4 (L) X 4 (W) X 4 (H)		-	-	-	-	BAFFLE PLATES NOT APPLICABLE
ABSORBER AREA DRAIN PIT	4 (L) X 4 (W) X 4 (H)		-	-	-	-	BAFFLE PLATES NOT APPLICABLE
BALL MILL AREA DRAIN PIT	4 (L) X 4 (W) X 4 (H)		-	-	-	-	BAFFLE PLATES NOT APPLICABLE

(*) THERE MAY BE A (+/-)10% VARIATION IN THE DIMENSIONS . EXACT DIMENSIONS SHALL BE DECIDED DURING DETAIL ENGINEERING.

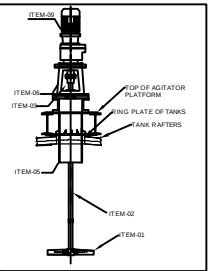

NOTES:

1. FOR THICKNESS AND SPECIFICATION OF RUBBER LINING (BIDDERS SCOPE) REFER TANKS SCHEDULE PROVIDED WITH THE TECHNICAL SPECIFICATION.
2. FOUNDATION BOLTS FOR ALL TANKS SHALL BE IN BIDDER'S SCOPE.
3. FOR ROOF SLOPE OF TANKS REFER TANKS SCHEDULE.
4. ALL DIMENSIONS, UNLESS OTHERWISE MENTIONED, SHALL BE IN MM.
5. 8MM THICK CHEQUERED PLATES SHALL BE CONSIDERED ON ALL AGITATOR PLATFORMS.
6. THE LOCATION AND ORIENTATION OF PLATFORM/STAIRCASE ARE REPRESENTATIVE ONLY. FINAL LOCATION AND ORIENTATION SHALL BE DECIDED DURING DETAIL ENGINEERING BASED ON THE ACTUAL LAYOUT.
7. THE NOZZLES SHOWN IN THE DRAWING IS INDICATIVE ONLY.
8. FOR SIDE MOUNTED AGITATORS MOUNTING ON AUXILARY ABSORBER TANK, REFER SKETCH-2

REMARKS	
1	This is typical drawing for vertical agitator mounting in circular tanks.
2	For tank dia (D) and Height (H) , bidder shall be refer to the technical specification.

S.NO	ITEM	SUPPLY	E&C	REMARKS
1	Impeller Blades	BHEL	BIDDER	SUPERVISION OF ERECTION BY AGITATOR SUPPLIER (SHALL BE ARRANGED BY BHEL). COMMISSIONING BY AGITATOR SUPPLIER
2	Shafts	BHEL	BIDDER	
3	Coupling arrangement (Flexible)	BHEL	BIDDER	SUPERVISION OF ERECTION BY AGITATOR SUPPLIER (SHALL BE ARRANGED BY BHEL). COMMISSIONING BY AGITATOR SUPPLIER
4	Gland Packing, Seals, O Rings, Glands	BHEL	BIDDER	
5	Shaft Sleeve	BIDDER	BIDDER	
6	Lantern Stools (Bearing Housing), Safety Guard	BHEL	BIDDER	SUPERVISION OF ERECTION BY AGITATOR SUPPLIER (SHALL BE ARRANGED BY BHEL). COMMISSIONING BY AGITATOR SUPPLIER
7	Bearings	BHEL	BIDDER	
8	AGITATOR Mounting Flanges with gaskets and fasteners	BIDDER	BIDDER	
9	Drive Motor(IE3) with gearbox arrangement	BHEL	BIDDER	SUPERVISION OF ERECTION BY AGITATOR SUPPLIER (SHALL BE ARRANGED BY BHEL). COMMISSIONING BY AGITATOR SUPPLIER
10	Mating Flange for Supporting on Slurry Tank Roof	BIDDER	BIDDER	
11	Baffle plate (min 4 nos. per tank)			

NTPC DRG. No.

PROJECT: 4X210MW + 2X500MW KAHALGAON STPP FGD (STREAM : FLUE GAS DESULPHURISATION)

CONSULTANT: NTPC

NTPC LIMITED.
(A GOVERNMENT OF INDIA ENTERPRISE)

BHARAT HEAVY ELECTRICALS LTD
POWER SECTOR
POWER ENGINEERING DEPARTMENT
INDIA

		DATE	SIGN	DATE
DESIGN				
CHECKED				
APPD				

TITLE: TYPICAL ARRANGEMENT OF VERTICAL MOUNTED AGITATOR & AGITATOR PLATFORM, BAFFLE PLATES

SCALE : NTS

DRAWING NO. SKETCH-11

SH 01 OF 02

REV. 00

Size A1

04/05/2021

1) ABSORBER TANK AGITATOR

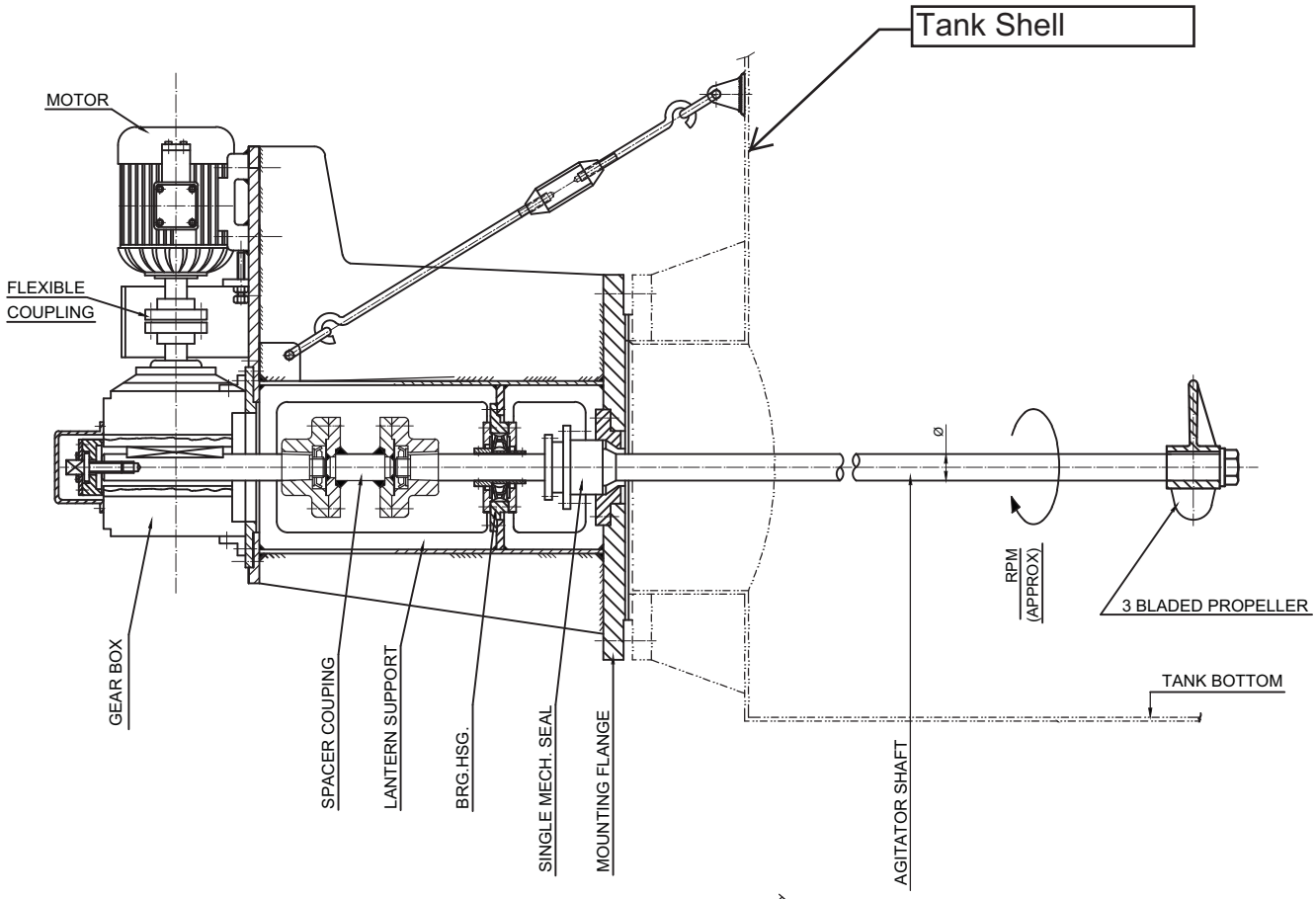

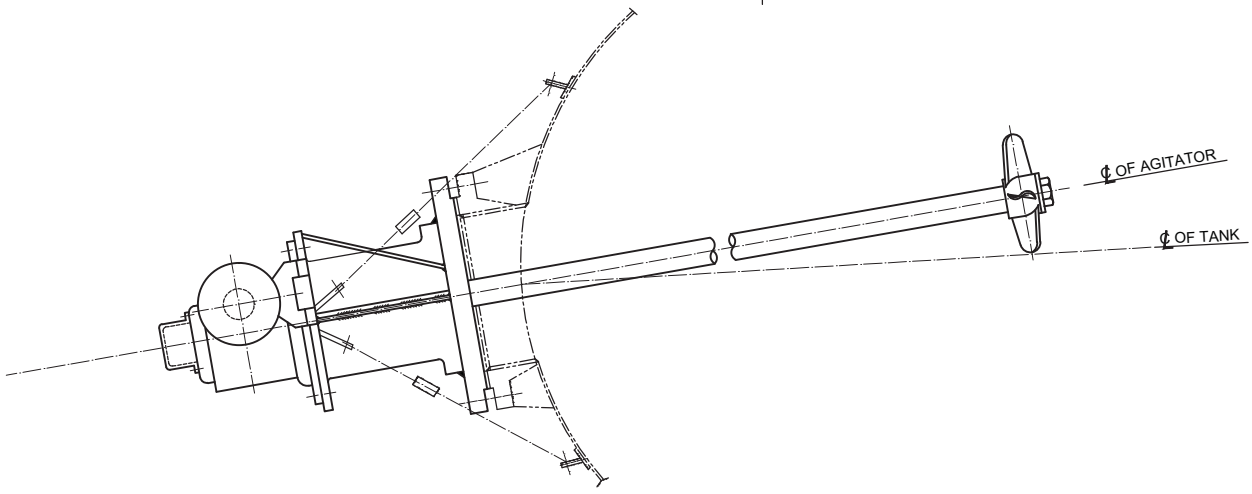

NOTES:

1) All supporting arrangement along with the mounting flange shall be in bidders scope.
2) The erection of the agitator shall be in bidder's scope. The agitators shall be provided as free issue item by BHEL. Further the supervision of the erection shall be arranged by BHEL.
3)Commissioning of agitator is excluded from the scope of bidder.
4) There shall be minimum 3nos. of agitator for the absorber tank.

INDICATIVE SKETCH

FOR REFERENCE ONLY

TYPICAL MOUNTING ARRANGEMENT OF SIDE MOUNTED AGITATOR-SKETCH-002

PROJECT : 4X210MW + 3X500MW KAHALGAON STPP FGD

ANNEXURE-9

Material of construction for pipes, fittings and other items

Item	Size	Thickness	Standard & Specification
PIPING	DN25 - DN50	Heavy	IS 1239 SML SW
	DN65 - DN150	Heavy	IS 1239 ERW BW
	DN200 - DN300	SCH20	IS 3589 Gr.410 ERW BE
	DN350 - DN500	SCH10	IS 3589 Gr.410 ERW BE
	DN550 - DN1000	7.9T	IS 3589 Gr.410 ERW BE
	DN1100 - DN1200	9.5T	IS 3589 Gr.410 ERW BE
	DN1350 - DN1500	11.9T	IS 3589 Gr.410 ERW BE
	DN1600 - DN1800	12.7T	IS 3589 Gr.410 ERW BE
FITTING	DN25 - DN50	Suit to PIPE	SW A234-WPB ASME-B16.11
	DN65 - DN500	Suit to PIPE	BW A234-WPB ASME-B16.9
	DN550 & above	Suit to PIPE	IS 2062 Gr.B (plate formed) ASME-B16.9
FLANGES	DN25 - DN600	-	IS 2062 Gr.B (plate) SO FF ASME B 16.5 Cl.150
	DN650 - DN1800	-	IS 2062 Gr.B (plate) SO FF AWWA-C207 Cl.D
MS PLATES	-		IS 2062 E250 BR/B0
STRCUTURE (ANGLE, CHANNEL, BEAM, BAR,FLAT ETC.)	-		IS 2062 GR.A /B
HANDRAIL	-		IS 1239 (MEDIUM), GALVANIZED
GASKETS	-		BUTYL RUBBER
ANCHOR BOLTS FOR FOUNDATION	-		IS 1367 PART 3, CLASS 4.4
BOLTS & NUTS	-		SA 193 GR B7 & SA 194 GR 2H
FASTENERS USED IN WETTED CONDITION	-		ALLOY 926 or BETTER MATERIAL

PROJECT :4X210MW+3X500MW KAHALGAON STPP FGD

ANNEXURE- 10

1.PRIMARY HYDRO CYCLONE FEED TANK

S.N.	NOZZLE MARK	SIZE (NB)	QTY (NOS)	SERVICE
1	N1 A/B	100	2	INLET TO TANK ON ROOF
2	N2 A/B/C	125	3	INLET TO TANK ON ROOF
3	A1	600	1	AGITATOR NOZZLE ON ROOF
4	MH1/MH2	800	2	MANHOLE ON SHELL AND ROOF
5	N3	400	1	TANK OVERFLOW
6	LT-1/LT-2	80	2	LEVEL TRANSMITTER ON ROOF
7	N4	80	1	VENT(WITH BIRD SCREEN) ON ROOF
8	N5	150	1	TANK DRAIN
9	N6 A/B	250	2	PUMP SUCTION (OUTLET)

2.FILTERATE WATER TANK

S.N.	NOZZLE MARK	SIZE (NB)	QTY (NOS)	SERVICE
1	N1 A/B	350	2	INLET TO TANK ON ROOF
2	N2 A/B	300	2	INLET TO TANK ON ROOF
2	N3 A/B	200	2	INLET TO TANK ON ROOF
3	N4	100	1	INLET TO TANK ON ROOF
4	N5	65	1	INLET TO TANK ON ROOF
5	A1	600	1	AGITATOR NOZZLE ON ROOF
6	MH1/MH2	800	2	MANHOLE ON SHELL AND ROOF
7	N6	350	1	TANK OVERFLOW
8	LT-1/LT-2	80	2	LEVEL TRANSMITTER ON ROOF
9	N7	80	1	VENT(WITH BIRD SCREEN) ON ROOF
10	N8	150	1	TANK DRAIN
11	N9 A/B	250	2	PUMP SUCTION (OUTLET)

3.SECONDARY HYDRO CYCLONE FEED TANK

S.N.	NOZZLE MARK	SIZE (NB)	QTY (NOS)	SERVICE
1	N1 A/B	250	2	INLET TO TANK ON ROOF
2	N2	150	1	INLET TO TANK ON ROOF
3	A1	600	1	AGITATOR NOZZLE ON ROOF
4	MH1/MH2	800	2	MANHOLE ON SHELL AND ROOF
5	N3	300	1	TANK OVERFLOW
6	LT-1/LT-2	80	2	LEVEL TRANSMITTER ON ROOF
7	N4	150	1	TANK DRAIN
8	N5 A/B	150	2	PUMP SUCTION (OUTLET)

9	N6	80	1	VENT(WITH BIRD SCREEN) ON ROOF

4. WASTE WATER TANK

S.N.	NOZZLE MARK	SIZE (NB)	QTY (NOS)	SERVICE
1	N1 A/B	200	2	INLET TO TANK ON ROOF
2	N2	80	1	INLET TO TANK ON ROOF
3	N3	50	1	INLET TO TANK ON ROOF
5	A1	600	1	AGITATOR NOZZLE ON ROOF
6	MH1/MH2	800	2	MANHOLE ON SHELL AND ROOF
7	N4	200	1	TANK OVERFLOW
8	LT-1/LT-2	80	2	LEVEL TRANSMITTER ON ROOF
9	AT-1/AT-2	80	2	ANALYSER TRANSMITTER ON ROOF
10	N5	80	1	VENT(WITH BIRD SCREEN) ON ROOF
11	N6	200	1	TANK DRAIN
12	N7 A/B	150	2	PUMP SUCTION (OUTLET)

5. LIMESTONE SLURRY STORAGE TANKS - 2 NOS

S.N.	NOZZLE MARK	SIZE (NB)	QTY (NOS)	SERVICE
1	N1 A/B	250	2	INLET TO TANK ON ROOF
2	N2 A/B/C/D/E	100	5	INLET TO TANK ON ROOF
3	A1	450	1	AGITATOR NOZZLE ON ROOF
4	MH1/MH2	800	2	MANHOLE ON SHELL AND ROOF
5	N3	200	1	TANK OVERFLOW
6	LT-1/LT-2	80	2	LEVEL TRANSMITTER ON ROOF
7	DT-1/DT-2	80	2	DENSITY TRANSMITTER ON ROOF
8	N4	80	1	VENT(WITH BIRD SCREEN) ON ROOF
9	N5	200	1	TANK DRAIN
10	N6 A/B/C/D/E	100	5	PUMP SUCTION (OUTLET)

6. AUXILIARY ABSORBENT TANK

S.N.	NOZZLE MARK	SIZE (NB)	QTY (NOS)	SERVICE
1	N1 A/B/C/D	350	4	INLET TO TANK ON ROOF
2	N2 A/B	300	2	INLET TO TANK ON ROOF
3	N3 A/B/C/D	250	4	INLET TO TANK ON ROOF
4	N4 A/B/C	200	3	INLET TO TANK ON ROOF
5	N5 A/B	150	2	INLET TO TANK ON ROOF
6	A1	670	1	AGITATOR NOZZLE ON ROOF
7	MH1/MH2	800	2	MANHOLE ON SHELL AND ROOF
8	N6	350	1	TANK OVERFLOW
9	LT-1	80	1	LEVEL TRANSMITTER ON ROOF
10	N7	80	1	VENT(WITH BIRD SCREEN) ON ROOF
11	N8	300	1	TANK DRAIN
12	N9 A/B	250	2	PUMP SUCTION (OUTLET)

7. PROCESS WATER TANKS - 2 NOS

S.N.	NOZZLE MARK	SIZE (NB)	QTY (NOS)	SERVICE
1	N1	250	1	INLET TO TANK ON ROOF
2	N2 A/B/C/D	50	4	INLET TO TANK ON ROOF
3	N3 A/B/C/D	80	4	INLET TO TANK ON ROOF
4	MH1/MH2	800	2	MANHOLE ON SHELL AND ROOF
5	N4	250	1	TANK OVERFLOW
6	LT-1/LT-2	80	2	LEVEL TRANSMITTER ON ROOF
7	N5	80	1	VENT(WITH BIRD SCREEN) ON ROOF
8	N6	125	1	TANK DRAIN
9	N7	250	1	PUMP SUCTION (OUTLET)
10	N8	350	1	PUMP SUCTION (OUTLET)

8. BELT FILTER WASH TANKS - 2 NOS

S.N.	NOZZLE MARK	SIZE (NB)	QTY (NOS)	SERVICE
1	N1	65	1	INLET TO TANK ON ROOF
2	N2	65	1	INLET TO TANK ON ROOF
3	MH1/MH2	800	2	MANHOLE ON SHELL AND ROOF
4	N3	125	1	TANK OVERFLOW
5	LT-1/LT-2	80	2	LEVEL TRANSMITTER ON ROOF
6	N4	50	1	VENT(WITH BIRD SCREEN) ON ROOF
7	N5	80	1	TANK DRAIN
8	N6 A/B	80	2	PUMP SUCTION (OUTLET)

9. CAKE WASH (CLARIFIED WATER) TANKS - 2 NOS

S.N.	NOZZLE MARK	SIZE (NB)	QTY (NOS)	SERVICE
1	N1	125	1	INLET TO TANK ON ROOF
2	N2	80	1	INLET TO TANK ON ROOF
3	N3	65	1	INLET TO TANK ON ROOF
6	MH1/MH2	800	2	MANHOLE ON SHELL AND ROOF
7	N4	125	1	TANK OVERFLOW
8	LT	80	1	LEVEL TRANSMITTER ON ROOF
9	N5	50	1	VENT(WITH BIRD SCREEN) ON ROOF
10	N6	80	1	TANK DRAIN
11	N7 A/B	80	2	PUMP SUCTION (OUTLET)

Notes

1: The above shown sizes and number of nozzles are indicative and for estimation purpose only. Final number and sizes of nozzles shall be furnihsed during detailed engineering.
2. Tank drain zonnle to be provided with drain box 500 mm2 for all slurry tank (except sl .on. 7, 8 & 9), drawing attached seperately .

ANNEXURE -11

All dimensions are in mm

Sketch of Drain Pit (Typical)

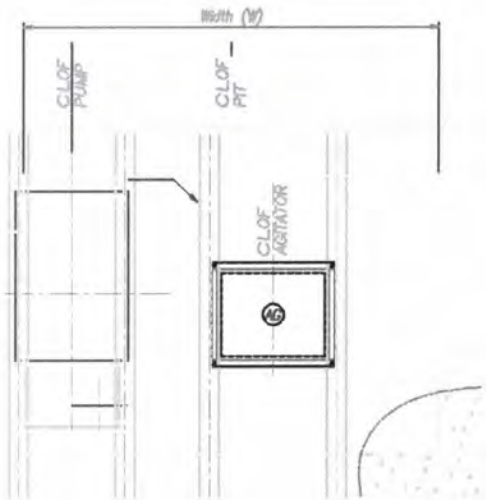

Plan

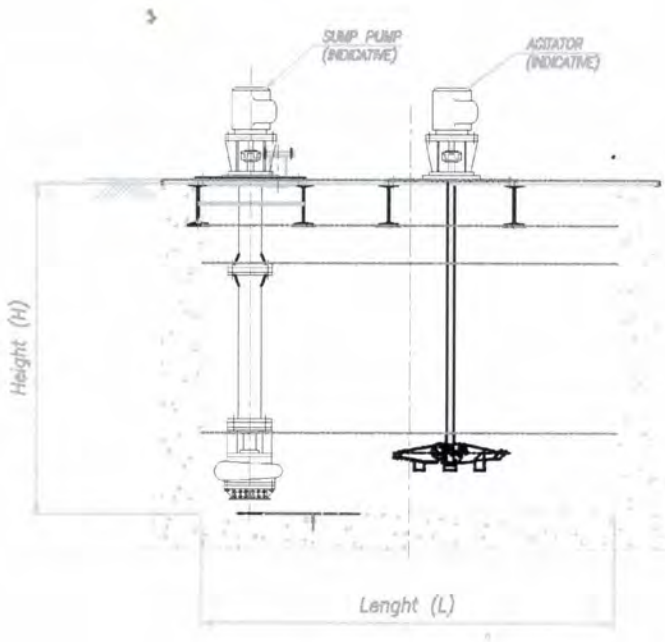

Elevation

Note:

For dimension, please refer clause no: 5.1 Table No: 4 of technical specificaion

DRAWING NO.: SKETCH-02

DRAWING NO. 3-FW-750-05101

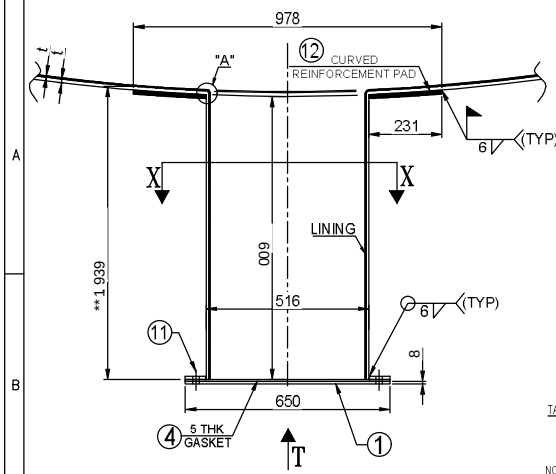

PLAN

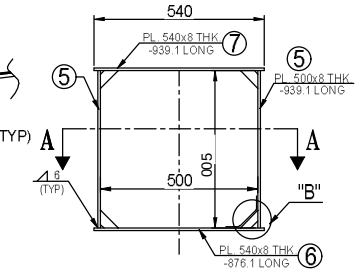

SECTION - XX

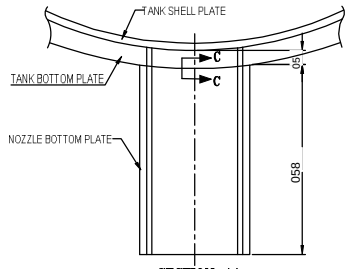

SECTION-AA

(NOZZLE BOTTOM PLATE DETAILS FOR CONNECTION WITH TANK BOTTOM PLATE)

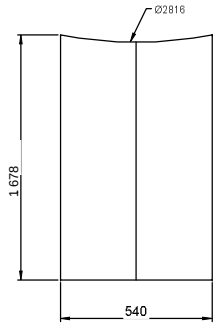

DETAIL OF ITEM NO. 6

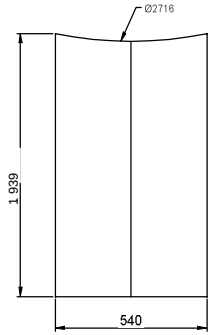

DETAIL OF ITEM NO. 7

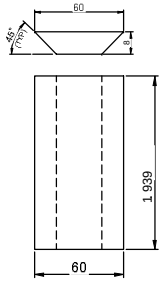

DETAIL OF ITEM NO. 8

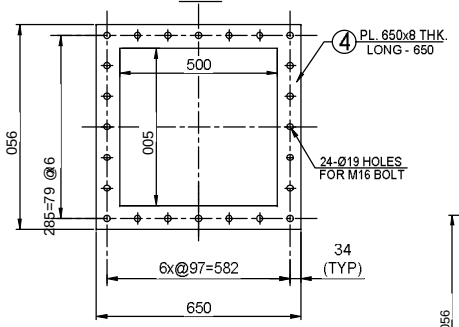

VIEW - T

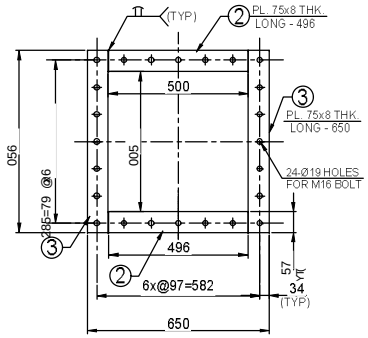

DETAIL OF ITEM NO.2 & 3

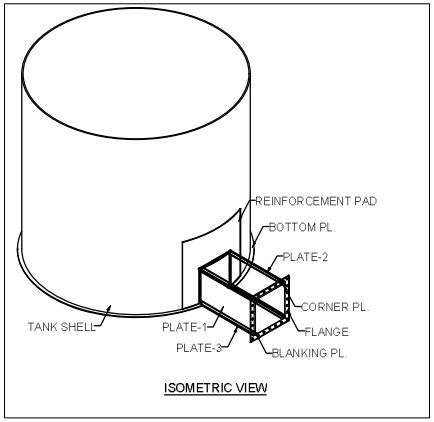

ISOMETRIC VIEW

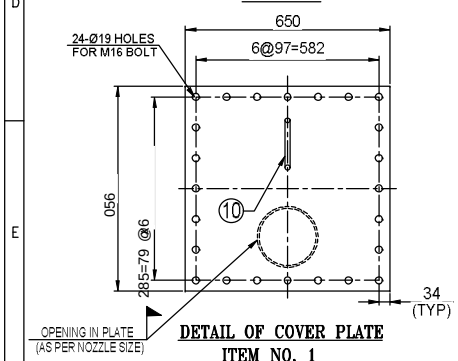

DETAIL OF COVER PLATE ITEM NO. 1

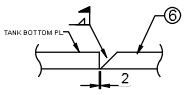

SECTION-CC

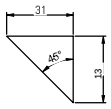

DETAIL OF ITEM NO.9

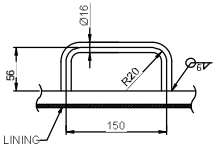

DETAIL OF HANDLE ITEM NO. 10

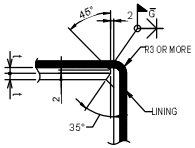

DETAIL OF -"A"

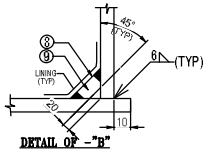

DETAIL OF -"B"

BILL OF MATERIALS

SL NO.	ERECTION MKD.	ITEM NO.	SECTION	LENGTH	Qty FOR ONE ASSEMBLY	UNIT WT. (KGS/M2)	WEIGHT FOR ONE ASSEMBLY (Kgs.)	NOS. OF ASSEMBLY	TOTAL WEIGHT
01	COVER PLATE	1	PL 650x8	650	1	78.50	26.53		
							26.53	1	26.53
02	FLANGE PL-1	2	PL 75x10	650	2	78.50	7.65		
							7.65	1	7.65
03	FLANGE PL-2	3	PL 75x10	496	2	78.50	5.85		
							5.85	1	5.85
04	GASKET	4	650x5	650	1	39.25	3.50		
							3.50	1	6.5
05	PLATE-1	5	PL 500x8	939.1	2	62.80	29.50		
							29.50	1	29.5
06	PLATE-2	6	PL 540x8	876.1	1	62.80	29.71		
							29.71	1	29.71
07	PLATE-3	7	PL 540x8	939.1	1	62.80	31.80		
							31.80	1	31.8
08	CORNER PL.	8	PL 60x8	939.1	4	62.80	12.30		
							12.30	1	12.3
09	BLANKING PL.	9	PL 31x8	31.0	8	62.80	0.25		
							0.25	1	0.25
10	HANDLE	10	ROD 16 DIA	283	1	1.573	0.42		
							0.42	1	0.415
11	HEX BOLT & NUT	11	BOLT M16x60	60	24	0.157	3.77		
							3.77	1	3.768
			TOTAL WEIGHT =						154.273

** EXTRA PROJECTION INSIDE TANK (DUE TO CURVATURE) TO BE TRIMMED SUITABLY AFTER ERECTION.

NOTES:-

01. ALL DIMENSIONS ARE IN mm.
02. ALL PLATE WELDING SHALL BE 5 MM FILLET U.N.O.
03. FOR ITEM NO. 12, REFER DWG NO. 3-FW-750-05106.
04. FOR STANDARD FABRICATION NOTES REFER 4-00-000-32487.
05. MATERIAL
    A. MATERIAL SHALL BE CARBON STEEL (C.S).
    B. NECK SHALL BE MADE WITH C.S PLATE. REINFORCING PADS SHALL BE OF THE SAME MATERIAL AND THICKNESS AS BOTTOM SHELL PLATE.
    C. GASKET SHALL BE MADE OF RUBBER AS PER SPECIFICATION. COTTON PIN SHALL BE MADE OF C.S.
    D. BOLTS AND NUTS SHALL BE MADE OF GALVANISED STEEL.
06. REMOVE ALL EXCESS WELD METAL AND SPATTER FROM METAL SURFACE TO BE LINED. FINESH METAL SURFACE SMOOTH.
07. FOR LOCATION REFER RESPECTIVE GA DRAWING.
08. ITEM NO.9 (BLANKING PL.) TO BE SUITABLE PLACE IN TRIANGULAR AREA FOR BLANKING & TO BE GRINDED FOR LINING.
09. FASTENERS RELEASED IN GMS ARE TO BE USED FOR ASSEMBLY OF NOZZLE, GASKET & COVER PL. DURING TRANSPORT.

REV	DATE	ALTERED
ZONE		CHECKED

CAUTION: The information of this drawing is the property of BHARAT HEAVY ELECTRICALS LTD. It must not be used directly or indirectly in any way detrimental to the interest of the company.

TYPE OF PRODUCT
OR NAME OF
CUSTOMER/PROJECT

BHARAT HEAVY ELECTRICALS LTD.,
UNIT: BOILER AUXILIARIES PLANT.
RANIPET - 632 406.

	NAME	SIGN	DATE	NO OF VAR.
DRN	DINESH/S.SARKAR		10.02.21	
CHD	MOHAHAK/SAHANI		12.02.21	-
APPD	K.B.PADHI		12.02.21	

DEPT	GRADE OF UNTOL.DIM	SCALE	WEIGHT (KG).	REF. TO ASSY/OLD DRG.	ITEM NO.	NO. OF ITEMS
AQCS				3-FW-000-03832/00	-	010
CODE 862	PR: AQ: 500	N.T.S				

TITLE: DETAILS OF 500 SQ. NOZZLE FOR BOTTOM DRAIN

CARD: U 01

DRAWING NO.: 3-FW-750-05101

REV: 0