COPYRIGHT AND CONFIDENTIAL
The information on this document is the property of BHARAT HEAVY ELECTRICALS LIMITED.
It must not be used directly or indirectly in any way detrimental to the interest of the company.

Instruction to bidders:

1) Bidders are advised to contact BHEL for essential technical queries in writing within one week of issue of Enquiry. Offers with incomplete information will not be considered for evaluation, and are likely to be rejected without any further correspondence with the Bidder.
2) Unsolicited requests from bidders for alterations to their already submitted offer will not be permitted. These would not be taken cognizance, and offers will be evaluated without taking into account such requests/correspondence.
3) Any technical features over & above BHEL enquiry specification requirements proposed by Bidder will not be given preference for the purpose of evaluation.
4) Bidders shall comply BHEL specifications in total. Incomplete offers will be rejected. In case feasible deviations are proposed by the bidder and subsequently withdrawn, no commercial implications can be claimed by the bidder.
5) The make of Bidder bought out items shall be as per vendor list. In case Bidder proposes alternate make / model of bought out item due to non-availability of statutory certification etc., the same shall not be binding on BHEL. Such changes shall be explicitly listed in deviation list with applicable price (for removal of the said deviation, if applicable) explicitly indicated (with specific item no) in the PRICED price schedule.
6) In the event of any conflict between these specifications, data sheets, related standards, codes etc. the bidder shall refer the matter to the purchaser for clarifications and only after obtaining the same shall proceed with the manufacture / procurement of the items in question.
7) Bidder shall submit duly filled deviation format enclosed with this specification along with technical offer, otherwise, it will be presumed that there are no deviations from this specification. Offer without this deviation list will not be evaluated & shall be rejected. If, there are no deviations, bidder shall submit signed copy of deviation format, mentioning "No Deviations".
8) Changes if any made by BHEL during technical evaluation on the specification requirements or Bill of material, bidder is requested by the purchase to submit impact price (amount to be reduced or increased to the original offered price) for those changed items only, other items for which there are no technical changes, unit rates shall be maintained as it is.
9) **In case of any technical query, bidders may contact the following BHEL engineer:**
   Name: Ramniwas Sangwa
   Designation: Manager
   Deptt: TC Engineering
   Phone: +91 40 2318 3548
   Email: ramsangwa@bhel.in

COPYRIGHT AND CONFIDENTIAL
The information on this document is the property of BHARAT HEAVY ELECTRICALS LIMITED.
It must not be used directly or indirectly in any way detrimental to the interest of the company.

TECHNICAL ADDENDUM FOR DRY GAS SEAL SKID
Project: HRRL DHDT RG Compressor

1 GENERAL

This specification is applicable for the variants mentioned in the table below and is an addendum to TC55450-R03 (Specification for Dry Gas Seal Skids for Centrifugal Compressors). Vendor shall explicitly bring out any conflict between this specification and its attachments with TC55450-R03.

2 VARIANT TABLE

Project	Description	Material Code	Remarks
HRRL DHDT Recycle Gas Compressor	Seal Gas Filter Skid	TC9765436017	1) The Seal Gas system consists of 01 set Filter Skid and 02 sets of Control Skids. 2) The skid rating shall be 1500# for Primary lines and 300# for secondary / barrier lines.
	Seal Gas Control Skid	TC9765436025	
	Seal Gas Skid Mand Spares (as per price schedule)	TC9765436033	
	Seal Gas Skid Loose Spares (unused items of Main + Spare BOM, dispatch to BHEL)	TC9765436041	

3 DESIGN

3.1 The project specific requirements shall as per the following attachments:

Sl. No.	Description	Document No.
a	Seal Gas P&ID	Annexure-1. For reference only. Condensate pot with drain On-Off valve is not indicated, however it is required.
b	TC55450-R03	Annexure-2.
c		
d	EIL specifications, ITP and datasheets	Annexure-4.
e	Additional Vendor List	Annexure-5.

3.2 Vendor shall include automatic change-over arrangement (On-Off valve) from normal to emergency / start up seal gas supply along with all the necessary instrumentation and controls required during start-up & emergencies.

3.3 Valve positioner shall be supplied along with valve diagnostic software / valve signature in USB. This software shall be integrated with customer control system for advance control valve diagnostics like seat ring condition, gland packing condition, actuator leakage etc.

3.4 The primary seal gas supply lines along with all inline equipment & instruments shall be min 2”. The gas velocity shall be limited to 30 m/s.

3.5 Vendors to note that the seal gas skid assembly may be changed to a single skid if accepted by end user, however the same shall be informed only during detail engineering only. No price or delivery implication will be accepted on account of this.

3.6 Vendor to refer DGS specification for all operating & design parameters.

COPYRIGHT AND CONFIDENTIAL
The information on this document is the property of BHARAT HEAVY ELECTRICALS LIMITED.
It must not be used directly or indirectly in any way detrimental to the interest of the company.

4 **PROJECT SPECIFIC REQUIREMENT**

4.1 For all other requirements, formats etc. refer Dry Gas Seal Skid specification TC55450-R03 along with the following project specific requirements.

Clause No	Existing	To be replaced with
2.1-a	Seal Gas P&I Diagram as per Variant Table-4 of this specification	Annexure-1
2.1-c	List of Instruments, make & model as per Table-1 of this specification	As per this addendum.
3.3	NACE	NACE MR 0103 is applicable
3.4	Piping material	Complete skid piping / tubing material shall be SS316L.
4.7	Filtration grade	**SEAL GAS DUPLEX FILTER:** Filtration efficiency : 99.9 % Particle efficiency : 1.0 micron ßx ≥ 1000 **SEC/BARR FILTER:** Grade of filtration : 1 µm
5.1	The Pipe sizes and terminal points shall be as per the Seal Gas P&ID indicated in variant table-4.	Refer 3.4 above. BHEL shall provide 2" connection or higher if required for primary seal gas.
5.4	Flange connection	All flanges shall be WN RF / RJ
5.5	PMI & IGC	PMI & IGC is applicable for all instrumentation, piping items.
6.5	All the instruments and quantity shall be as specified in Table-1.	As per this addendum.
7	Instrument installation	The instrument installation shall be piping standard. Primary inlet / vent / H_2S service shall be provided with double isolation valves. N2 Lines may be provided with tubing hookup.
6.6, 8.3	Foundation Fieldbus	Applicable for Open and Closed loop DCS instruments. FF JB by BHEL / Customer.
9	Documentation	Vendor to include documents listed in this specification.
10	Acceptance Criteria	The offered dry gas seal skid and panel shall be field proven and similar to the specified operating parameters as compared to at least FIVE UNITS designed, manufactured, tested and supplied by the proposed manufacturer and at least TWO of these units shall have completed at least ONE year of satisfactory operation without any major overhaul as on the bid due date.
Fig-1 to 5	Typical P&ID	Annexure-1
Table-1	List of Instruments, make & model	As per this addendum.
Table-4	List of variants	As per this addendum.
Table-5	Price Schedule	As per this addendum.
-	Cleanliness Test	No discoloration or hard articles found on 20 mesh screen after module blown for 5

Clause No	Existing	To be replaced with
		minutes with 7 kg/cm2g dry filtered gas.
14	Warranty / guarantee	All equipment / instrument supplied shall be guaranteed upto 31st August 2023 is proved under normal operating conditions to be of inadequate design or of defective material or of poor workmanship. In such event the guarantee period for the particular equipment / instrument shall be another 12 months from the date of acceptance by PURCHASER / OWNER of such replaced / repaired equipment / instrument. However, extended guarantee period shall have an upper limit till 31st August 2024.
15	Special requirement	Sourcing of any raw material or finish good products, any testing and processing on product (e.g. assembly) from China is not allowed except for the following: • Instrumentation items (Field transmitters like PT, PDT, LT, FT, TT etc. and Control Valve Positioner) **may have** some internal components / parts manufactured in China, however the instrument supplier shall not be from China.

5 **SEAL GAS SKID DIMENSIONS & PIPING ORIENTATION**

5.1 All the seal gas piping nozzles shall be terminated on top of the skids except drains.

5.2 Every effort shall be done to minimize the skid footprint. Efforts shall be made to minimize the skid size to 2000 mm x 1500 mm (Filter Skid) & 1500 mm x 1000 mm (Control Skid).

5.3 Vendor shall further try to reduce the above indicated dimensions based on its 3-D modeling of the skids.

5.4 Vendor shall submit seal gas skid 3D model in native file format for integration into BHEL 3D model of RGC Compressor House.

6 **DOCUMENTATION**

6.1 The following documents as a minimum shall be supplied by the vendor. The number of hard copies & CD/DVD/USB shall be as per TC55450-R03.

a) As-built GA drawings.
b) As-built Instrument datasheets including instrument vendor datasheets, GA drawings & sizing calculations.
c) Spares list.
d) Packing list.
e) Material test certificates.
f) Filter degree of filtration test certificate.
g) Explosion protection certificates for all electronic instruments.
h) Terminal wiring details of Junction Box.
i) Skid Photographs.
j) Instruction, Service and Maintenance manual.
k) Guarantee Certificates.

6.2 Three sets hard copies & one number CD/DVD/USB of the above documents shall be submitted to BHEL prior to dispatch of the skids.

COPYRIGHT AND CONFIDENTIAL
The information on this document is the property of BHARAT HEAVY ELECTRICALS LIMITED.
It must not be used directly or indirectly in any way detrimental to the interest of the company.

COPYRIGHT AND CONFIDENTIAL
The information on this document is the property of BHARAT HEAVY ELECTRICALS LIMITED.
It must not be used directly or indirectly in any way detrimental to the interest of the company.

7 **LIST OF INSTRUMENTS:**

SL. No.	Instrument	Qty Note (2)	Minimum Specification	Vendor	Model
1	Differential Pressure Gauges	12	Differential Pressure Gauge IP66; panel mount Range: as required Dial Size: 150mm Pr.Conn. : ¼" NPTF Static Pr. : 210 kg/cm2(g)	Vendor list	Switzer 109-V-E-2-6-0-S or eqv.
2	Pressure Gauges	30	Pressure gauge IP67; panel mount Accuracy: ±1% of full scale Range: as required Dial Size: 150mm Pr.Conn.: ½" NPTM Case & Bezel: All SS Construction Wetted parts: * Solid front type for seal gas line. Liquid filled / with pulsation damper. Over range protection: SS316	Vendor list	
3	Differential Pressure Transmitter	15	Smart-HART / FF Protocol Intrinsic safe Ex-ia / FISCO & flameproof Ex-d certified for IEC Zone1, Gas IIA, B, C Min Load: 600 ohms All SS construction Pr.Conn.: ½" NPTF Accuracy: 0.075% of span with TD of 1:10 Static Pr.: 210kg/cm2(g) Integral LCD indicator In built lightning & surge protection SIL certified for ESD / PLC	Yokogawa / Eqv. (refer vendor list for restrictions & additional vendors)	HART: EJA 110A E H S4 GU 2 CEB KU22 A D4 A1 M11 FF: EJA 110A FH S4 GU 2 CDB A D4 A1 M11 EE FS15 (KS26 / SS25)
4	Pressure Transmitter	40		Yokogawa / Eqv. (refer vendor list for restrictions & additional vendors)	HART: EJA 430A E * S4 GU 2 CEB KU22 A D4 A1 DG6 M11 FF: EJA 430A F * S4 GU 2 CDB A D4 A1 M11 EE FS15 (KS26 / SS25) Note : * is as per range
5	SMART positioner	For PDCV & On-Off valve partial stroke test	Positioner with Intrinsic safe Ex-ia & flameproof Ex-d certified for IEC Zone1, Gas IIA, B & C and metallic housing. 'Valve operating signature' in the form of hard copy and CD'	Metso, Fisher, Dresser, Flowserve & Samson	HART: Metso ND930 * HXT or eqv. Note : * is as per requirement

SL. No.	Instrument	Qty Note (2)	Minimum Specification	Vendor	Model
6	Flow Meter	10	Internal magnetic float or Rota meter design or an integral orifice and differential-pressure (DP) cell / thermal mass flow FF protocol Range: as required All other requirements same as PT / DPT. Pr.conn: Flanged	Vendor list	
7	Junction Box	8	SS316 / LM6 with SS316 cable glands	Vendor list	
8	Duplex filter (Coalescing type) with changeover transfer valve	1 set / 2 set	With changeover valve Startup diff. Pr.: * Max. Pr. For change over: * Filter vessel: SS316L Change over valve: SS 316L	BOLL & KIRCH FILTERBAU GMBH., DONALDSON INDIA FILTER SYSTEMS FLOWSERVE SANMAR LTD., FORAIN SRL HYDAC (INDIA) PVT. LTD., INDUFIL BV., ITALVALV SRL JOHN CRANE SEALING SYSTEMS PALL INDIA PVT. LTD.,	Filter sizing shall be as per API614. Vendor to provide TWO separate Primary seal gas Duplex filters in case of possibility of seal gas condensation in any operating scenario.
9	Pneumatic DP control valve	02 nos.	Material of body: SS316 L Material of Trim: * ANSI / FCI 70.2 Minimum class IV. Noise level shall not exceed 85db. Source treatment for noise shall be by using special trims like anti-noise trims; in case noise exceeds the allowable level. Bellow seal for corrosive & toxic gases like H2S, H2 etc. Actuator: Pneumatic diaphragm	Vendor list	
10	Secondary and barrier seal gas filters	04 sets	Same as duplex filter, except it is particulate filter.	Same as duplex filter	
11	Duplex Pressure regulator /	04 sets	As per system requirement		

COPYRIGHT AND CONFIDENTIAL
The information on this document is the property of BHARAT HEAVY ELECTRICALS LIMITED.
It must not be used directly or indirectly in any way detrimental to the interest of the company.

SL. No.	Instrument	Qty Note (2)	Minimum Specification	Vendor	Model
	PCV with SS housing and changeover transfer valve				
12	In line check valves	As reqd	As per system requirement	Vendor list	
13	Needle valves	As reqd	As per system requirement	Vendor list	
14	Instrument root & Isolation valves	As reqd	As per system requirement	Vendor list	
15	Tubes, Tube fittings	As reqd	As per system requirement	Swagelok, Parker Hannifin corp.	Additional vendor list not applicable for this item
16	Cable	As reqd	Single pair 1.5 mm2.	Vendor list	
17	Change over valve in startup gas & Condensate Drain valve	2no.	Full bore, On-off ball valve	Vendor list	
			ANSI / FCI 70.2 Minimum class VI TSO.		
			The body as well as the actuator shall meet the testing requirements as per API 617 latest revision.		
			Actuator: Pneumatic cylinder with spring return		
			SOV: 24VDC, IS, SIL 3 certified, Universal type, class H insulation.		
			Proximity type IS SIL certified limit switches, P&F make		
18	Temperature Gauges	05 nos.	Bi-metallic thermometer, every angle	Vendor list	
			IP67, direct mount		
			Accuracy: ±1% of full scale		
			Range: as per requirement		
			Dial Size: 150mm		
			Inst Conn: ½” NPTM bottom.		
			Case & Bezel: All SS Construction		
			Solid front type for gas line		
19	Temperature Gauge thermowell	05 nos	Instrument connection: ½” NPTF	Vendor list	Refer EIL drawing 7-52-0035
			Pr. Connections: 1-½” flanged. Rating as per skid		

COPYRIGHT AND CONFIDENTIAL
The information on this document is the property of BHARAT HEAVY ELECTRICALS LIMITED.
It must not be used directly or indirectly in any way detrimental to the interest of the company.

SL. No.	Instrument	Qty Note (2)	Minimum Specification	Vendor	Model
			rating. Line size shall be blown to 6" for thermowell mounting. All SS316 Construction. NACE certification Bore dia: suitable for TG		
20	Canopy for all transmitters, positioners & junction boxes	As reqd		Vendor list	
21	LT for condensate Pot	1 no	GWR	Vendor list	
22	MIMIC Panel	1 Set			

Notes:-

1. All instrument makes shall be as per this list.
2. Any item not covered in this list shall be from a reputed manufacturer unless otherwise specified in this specification elsewhere.
3. For the items, which are not covered in the list or vendors not indicated, vendor shall procure the same from their standard sub-vendors.
4. Since the instrument quantity indicated in the above table is more than the numbers required as per project specific P&I diagram, the additional quantity shall be supplied loose as LOOSE SPARES.
5. All the items of the same type of instrument shall be of same make.
6. Additional Vendor List as attached.
7. In case the above listed quantity is less than that required by the vendor as per vendor proposed P&ID, these additional instruments shall be considered by vendor.

8 DEVIATION FORMAT:

Bidder shall submit duly filled deviation format (as given below) along with technical offer, otherwise, it will be presumed that there are no deviations from this specification. Offer without this deviation list will not be evaluated & shall be considered for rejection. If, there are no deviations, bidder shall submit signed copy of this format, mentioning "No Deviations".

Sl. No.	Clause No. of Spec	Deviation	Reason for deviation	Deviation category	
				Product/design limitation	Optimization
1					
2					

9 CHECKLIST:

(TO BE FILLED BY THE VENDOR AND SUBMITTED ALONG WITH THE OFFER WITHOUT WHICH OFFER WILL NOT BE CONSIDERED)

Sl. No.	Requirement	Vendor Confirmation YES / NO
a.	Compliance to BHEL specification and its annexures.	

COPYRIGHT AND CONFIDENTIAL
The information on this document is the property of BHARAT HEAVY ELECTRICALS LIMITED.
It must not be used directly or indirectly in any way detrimental to the interest of the company.

Sl. No.	Requirement	Vendor Confirmation YES / NO
b.	Deviation (if any) included in offer with reason.	
c.	Price implication for deviation removal is indicated in Priced offer in case of any deviation.	
d.	Skid GA & BOM (with make/model) attached with technical offer.	
e.	Signed and stamped copy of BHEL specification attached with technical offer.	
f.	Spares BOM (with make/model) attached with technical offer.	
g.	Price schedule attached with technical offer with 'QUOTED' marked against each item.	
h.	PTR attached with technical offer.	

10 **SPARES PHILOSOPHY:**

SL NO	SPARE ITEM DESCRIPTION / SPARE PHILOSOPHY	QTY
a	Seal gas filter element with gaskets / O-rings (1 set is equal to 100% duplex filter replacement for complete skids): 6 Set.	1 set
b	Local Gauges: DP, Pressure, flow, temperature, level etc.-10% or min 01 no. each type with all accessories	
c	Transmitters: DP, Pressure, Level, Flow etc.-10% or min.1 no. each type with all accessories	
d	Control valve & On-Off Valve, Pressure Regulating Valve (self-Actuated) spares: 10 % or minimum 1 no of each type and size. i. Trim consisting of seat, seat ring/ seal ring, plug with stem, cage (wherever applicable), packing material. ii. Positioners (Smart) with links of each type and make. iii. Actuator Diaphragm. iv. Solenoid valve (02 nos) v. Proximity switch. vi. Air filter regulators of each type and size. vii. Bonnet Gaskets/ gland packing's, piston O-rings, bearing & liner. viii. Any special accessories provided along with the control valve like boosters, position transmitters (wherever applicable), etc.	
e	Instrument valves, manifolds & fittings: i. Fittings, lugs, nipples, sockets, blinds, unions: 10% or min. 2 no each type. ii. ½", ¾", 1", 1-½", 2" (etc.) valves (Ball, Globe, Gate, Needle, NRV etc.) : 10% or min. 1 no each type. iii. 2 valve & 3 valve manifolds, isolation valves, instrument valves, tube fittings, check valves, filter, regulator, orifice plates etc.: 10% or min. 1 no each type.	

COPYRIGHT AND CONFIDENTIAL
The information on this document is the property of BHARAT HEAVY ELECTRICALS LIMITED.
It must not be used directly or indirectly in any way detrimental to the interest of the company.

11 **PRICE SCHEDULE:**

Enquiry ref. no. Date:
Offer ref no. Date:

Sl no.	DESCRIPTION	Qty	TOTAL PRICE
1.	**Seal Gas Control system consists of the following:**		
a	SEAL GAS FILTER SKID HRRL: TC9765436017	1 set	
b	SEAL GAS CONTROL SKID HRRL: TC9765436025	2 set	
c	SEAL GAS SKID MAND SPARE HRRL: TC9765436033 (as per spares philosophy listed above)	1 set	
d	SEAL GAS SKID LOOSE SPARE HRRL: TC9765436041 (unsued items of Main + Spare BOM, dispatch to BHEL, **refer Notes-4 of clause 7)**	1 set	
2.	**Additional price to withdraw the deviations to following clauses: <Vendor To Indicate Clause Nos>**		
3.	**Optional offer for addition of each of the following instrument inclusive of root valves, piping & installation materials etc.**	**Optional price for each item**	
a	Filter cartridges / elements with gaskets / O-rings	1 set	
b	Pressure Transmitter	1 unit	
c	DP Transmitter	1 unit	
d	Pressure Gauge	1 unit	
e	Differential Pressure Gauge	1 unit	
f	Smart Positioner	1 unit	
g	Solenoid valve	1 unit	
h	Flow transmitter	1 unit	
i	Level transmitter	1 unit	
j	On-Off Valve	1 unit	
k	PDCV	1 unit	
l	PCV	1 unit	
4.	**Pre-Commissioning, Commissioning Supervision**		
a	Per diem for Commissioning activities for seal gas skid at site inclusive of Travel, boarding, lodging, and local conveyance.	Per diem	
5.	**Total Price for Evaluation {1+2}**		

Notes:

i. The word 'TYPE' means the Make, Model no., Type, Range, Size/ Length, Rating, Material as applicable.
ii. The individual prices for the spares and optional items above are valid for one year to order as and when the requirement arises.
iii. Any additional requirements which are essential for proper functioning of the dry gas seal system but not indicated in specification are included in the offer.

Vendor's signature & seal

COPYRIGHT AND CONFIDENTIAL
The information on this document is the property of BHARAT HEAVY ELECTRICALS LIMITED.
It must not be used directly or indirectly in any way detrimental to the interest of the company.

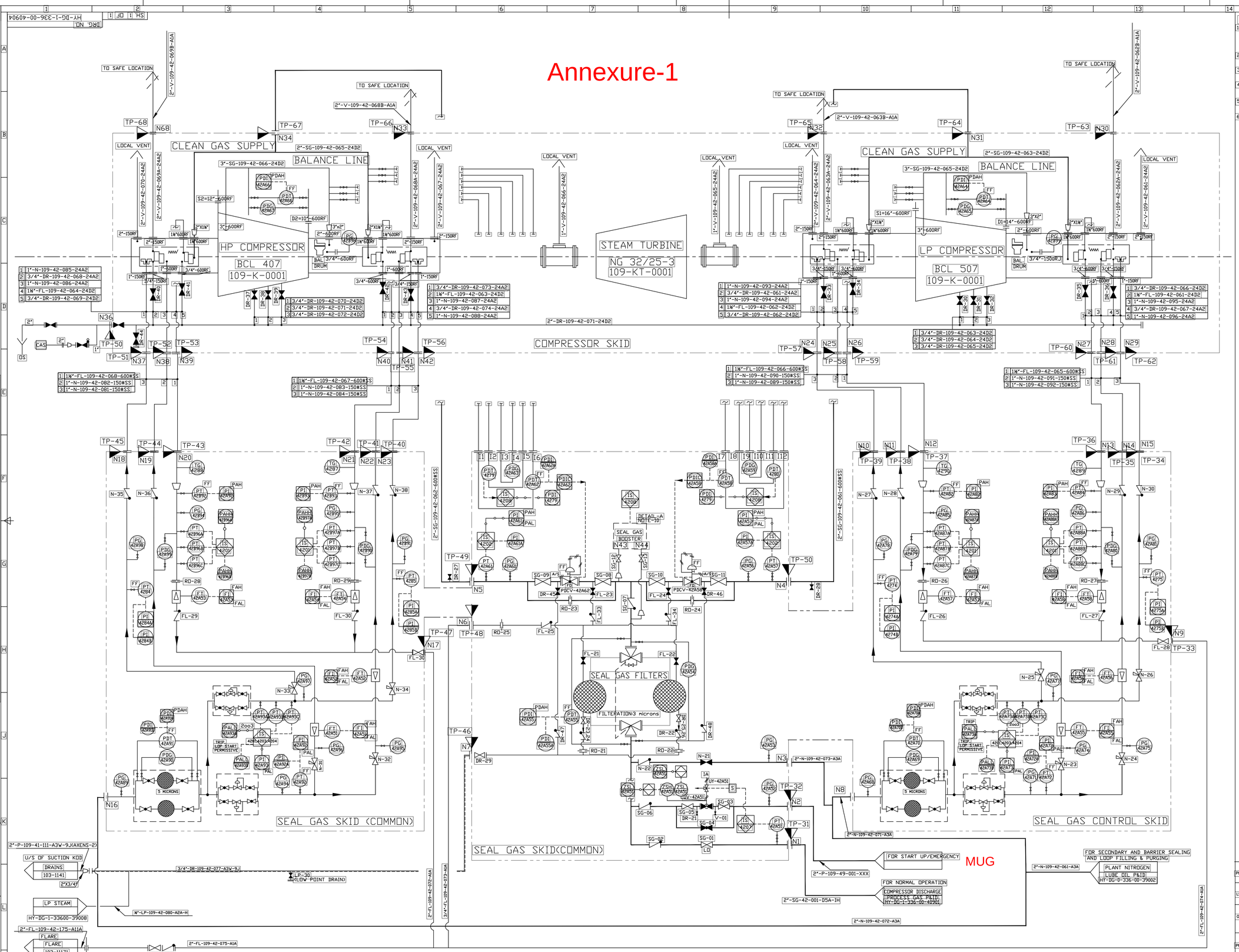

NOTES:

1. PIPING MATL WITHIN SEAL GAS FILTER AND CONTROL SKIDS SHALL BE ONE OF SS304/SS316/SS321 AS PER VENDOR. INTER-SKID CONNECTING PIPING ARE NOT IN BHEL SCOPE.
2. ALL LOW POINTS TO BE PROVIDED WITH DRAIN VALVE IN SEAL SUPPLY LINE TO COMPRESSOR SEALS.
3. THE HANDLES OF THE NEEDLE VALVES TO BE REMOVED AFTER THE INITIAL SETTING OF THE OPENING DURING THE INITIAL START UP.
4. COMMON SKID IS PROPOSED. HOWEVER ACTUAL NUMBER OS SKID SHALL BE INFORMED LATER.
5. PRESSURE INSTRUMENTS SHALL HAVE 3/4" SW GATE VALVE AS ROOT VALVE, TEMPERATURE GAUGES SHALL HAVE 1¼"-300RF (MIN) CONNECTION ON PIPES.
6. ALL INSTRUMENTS TAG NUMBERS SHALL BE PREFIXED WITH UNIT NO."109".

LEGEND:

SCOPE OF SUPPLY: TOYO | BHEL

VENT TO SAFE LOCATION

REFERENCE DRAWINGS:

1. LUBE OIL P&I DIAGRAM : HY-DG-0-336-00-40902
2. PROCESS GAS P&I DIAGRAM : HY-DG-1-336-00-40901
3. TABLE OF TERMINATING POINTS : HY-DS-4-336-00-40912
4. CAUSE & EFFECT TABLE : HY-DS-4-336-00-40916

PROJECT NAME :	RAJASTHAN REFINERY PROJECT RECYCLE GAS COMPRESSOR
LSTK :	TOYO ENGINEERING PVT LTD MUMBAI
OWNER :	HRRL DHDT BARMER REFINERY
PMC :	ENGINEERS INDIA LTD 1, BHIKAJI CAMA PLACE, NEW DELHI - 110 066
	BHARAT HEAVY ELECTRICALS LTD. HYDERABAD

	NAME	SIGN.	DATE	NO.OF VAR.
DRN.	MADHU		06.02.20	
CHD.	DEEPAK		06.02.20	NA
APPD.	KVM		06.02.20	

DEPT.	UNTOL. DIMS.	SCALE	WEIGHT (KG)	REF. TO ASSY. DRG.	ITEM NO.	NO.OF ITEMS
SI&ENGG. CODE: 415	CAD GENGF.	NTS	NA	NA	NA	NA

TITLE: SEAL GAS P&I DIAGRAM

CARD CODE | DRAWING NO. HY-DG-1-336-00-40904 | REV. 00

SHT. No 1 | NO. OF SHT. 1

REV.	DATE	ALTERED	CHD/APPD	ZONE

THE INFORMATION ON THIS DOCUMENT IS THE PROPERTY OF BHARAT HEAVY ELECTRICALS LIMITED. IT MUST NOT BE USED DIRECTLY OR INDIRECTLY IN ANY WAY DETRIMENTAL TO THE INTERESTS OF THE COMPANY.

Form No. RTD-E106
COPYRIGHT AND CONFIDENTIAL
The information on this document is the property of BHARAT HEAVY ELECTRICALS LIMITED.
It must not be used directly or indirectly in any way detrimental to the interest of the
Ref. Doc. C
COMP. FILE FILE NAME
TC55450. DOC

SPECIFICATION FOR DRY GAS SEAL SKIDS FOR CENTRIFUGAL COMPRESSORS

1. Scope

This specification covers the minimum requirements of design, detail engineering, fabrication and supply of completely assembled Gas Seal Control System (with impulse piping, tubing and wiring) for a Centrifugal Gas Compressor consisting of (a) Seal Gas Filter Skid & (b) Seal Gas Control Skid compatible with Dry gas seals. The detail of the different operating cases, Gas composition, ambient conditions and design parameters of the different lines, etc are furnished in the project specific DGS specification which is a part of this enquiry.

2. Brief description of Seal Gas Filter Skid and Seal Gas Control Skid for Centrifugal Compressor:

2.1 The Vendors minimum Scope of Supply and Work shall be as indicated below.

~~a) Seal Gas P&I Diagram as per Variant Table-4 of this specification.~~

b) Latest edition of API 614.

~~c) List of Instruments, make & model as per Table-1 of this specification.~~

2.2 The scope of supply shall include the following for each compressor:

1) Seal Gas Filter Skid
2) Seal Gas Control Skid
3) Mating flanges with gaskets, bolts and nuts at terminal points
4) Spare filter cartridges – ~~05 sets~~ (Each set consists of number of cartridges required for one Filter Bowl).
5) Loose supplied items like:
   i. Interconnection pipes and fittings between both assemblies.
   ii. Loose cable glands.
   iii. Foundation bolts and accessories
   iv. Instruments not mounted on the skids, etc.
   v. Any other item in Vendor's scope but not assembled on the skids

2.3 The function of the system is: -

- To supply and monitor process gas/ Nitrogen/ other gas, as applicable for primary injection to dry gas seals.
- To supply and monitor Nitrogen/ start up gas for purging
- To supply and monitor Inert gas (Nitrogen) for Secondary seals
- To supply and monitor Inert gas (Nitrogen)/ Instrument Air for barrier seals
- To monitor primary gas leakage and initiate Alarms/Shutdown in response to variation in leakage.

Rev. No.	Revisions	Prepared	Approved	Date
03	Refer to record of revisions	RAM	VVS	17/09/2010

2.4 The project specific P&I diagram shall be provided after the placement of the order during the detailed engineering. The availability of the gas for start up in primary injection line and barrier seal shall be finalized as per P&I diagram.

2.5 The total design and selection of the equipment of Seal gas filter skid and seal gas control skid is the responsibility of the Vendor. The ranges and set values of the Instruments are to be furnished by Seal Gas Control Skid & Seal gas filter skid Vendor for BHEL/Customer's review during detailed engineering after the placement of the order.

2.6 The primary seal gas line within filter skid shall be steam traced and insulated. All Piping, Valves and fittings forming a part of steam tracing shall be IBR certified. The steam parameters shall be provided during detailed engineering.

3. General arrangement of the skid Assemblies

3.1 Gas Seal Control System shall be designed as two Package Units: - a) Seal Gas control skid and b) Seal Gas filter skid. Each skid shall be stand-alone type and shall be formed out of suitable structural steel. A common skid shall be supplied in place of individual skids at a) and b) above, whenever indicated in the enquiry.

3.2 Equipments, Instruments, Regulators, Shut off ball valves, Modulating valves, Isolating valves, In-line check valves, Piping/Tubing with fittings, etc. shall be mounted and assembled on the respective skid.

3.3 All the materials in contact with primary seal gas inlet and vent shall be of SS 316L or Equivalent forging/casting materials and suitable for the gas composition specified in Dry Gas Seal specification. Also ,they shall comply with NACE-MR-01-75 latest edition

3.4 All the materials in secondary seal inlet and vent lines, barrier seal inlet and vent lines shall be of SS316 or Equivalent forging/casting materials.

3.5 Vendor to ensure that the Primary seal leakage to flare header lines along with the instruments shall be designed for the design parameters of seal gas lines up to NRV.

3.6 Vendor to provide the condensing pot as per design code ASME VIII div I as required along with control system instrumentation for automatic draining as part of scope of supply, for variants as per Table-4. Also, vendor to check the requirement and indicate in their offer for other variants in case of the following instances.

a) The gas passes through various elements in the system and shall be mixed with Hydrocarbons, which may become condensed on cooling. The vendor to provide suitable arrangement, if required to keep dryness in the gas in all operating conditions and removal of condensate as required for seals. Vendor to provide DEW point curve for our review along with the offer.

3.7 Whenever, the condensate pot is provided, the level transmitter shall be provided by selecting either of the following options which shall be selected after the placement of the order.

a) Guided wave radar type instrument shall be used for level measurement up to 1219 mm. ~~For all level measurement above 1219 mm diaphragm seal type differential~~

Form No. RTD-E106
COPYRIGHT AND CONFIDENTIAL
The information on this document is the property of BHARAT HEAVY ELECTRICALS LIMITED.
It must not be used directly or indirectly in any way detrimental to the interest of the
Ref. Doc. C
COMP. FILE FILE NAME
TC55450. DOC

~~pressure transmitter shall be used.~~ The Guided wave radar type level transmitter shall be with flange size and rating suitable for the design pressure of the system.

~~b) The level transmitter using remote diaphragm sealed DP transmitter shall be with 3" flange size and rating suitable for the design pressure of the system. The suitable flushing rings along with drain & vent valves shall be provided.~~

3.8 Whenever, the condensate pot is provided, the following shall be provided.

a) A solenoid valve operated drain control valve with proximity type limit switches designed for the condensate/oil flow envisaged for the project.

b) A level transmitter specified in 3.7 above.

~~c) A level gauge for local indication.~~

3.9 The Vendor shall note that the appearance engineering is one of the most important aspects. The whole Rack shall be very compact and shall give an aesthetically good look as this equipment is mounted on the operating floor of the compressor.

3.10 The Vendor shall take care of good accessibility for operation and maintenance of all parts. The Instruments and Components disposition /location on the rack and Piping/Tubing layout are paramount important aspect.

3.11 External paint shall be with the thickness 80-150 microns and internal paint shall be with the thickness 40-60 microns. The project specific painting specification, if applicable shall be provided during detailed engineering; vendor to carry out the same without any commercial implication.

3.12 The Skids shall be provided with lifting lugs for a 4-point lift.

3.13 Foundation holes shall be oval in shape to help in installation.

4. Seal Gas Duplex Filter (Coalescing)

4.1 The Duplex gas Filter shall be coalescing type as per design code ASME VIII div I, consisting of two filter bowls mounted in parallel with a change over valve. Each filter bowl is 100 % capacity. Clean Process gas is supplied to primary seal through a Duplex Filter with required filtration grade for liquids and solids as required for DGS.

4.2 The collapsible pressure for the cartridge is min. 10 kg/cm2 (g) differential.

4.3 The Gas Pressure to Primary Seal is maintained 0.5 kg/cm2 (g) more than Operating Gas by means of differential pressure controller and control valve.

4.4 While finalising the capacity (Flow) of Duplex Filter assembly, the maximum leakage through the labyrinth into the compressor and the primary seal leakage indicated in DGS specification shall be taken into account along with required margins.

4.5 The changeover valve is used for switching over from one filter bowl during operation so that one filter open to operating gas flow and other closed off for changing filter elements. There shall not be any reduction of flow during switching over operation. Arrows shall be provided on filter assembly to indicate the filter in operation. The change over valve shall be of Trans flow type. Double stage change over valve is preferred.

4.6 The filters shall be provided with drain and vent connections with valves.

Form No. RTD-E106
COPYRIGHT AND CONFIDENTIALITY
The information on this document is the property of BHARAT HEAVY ELECTRICALS LIMITED.
It must not be used directly or indirectly in any way detrimental to the interest of the
Ref. Doc. C
COMP. FILE FILE NAME
TC55450. DOC

Form No. RT-E 106 Rev D
COPYRIGHT AND CONFIDENTIAL
The information on this document is the property of BHARAT HEAVY ELECTRICALS LIMITED.
It must not be used directly or indirectly in any way detrimental to the interest of the
Ref. Doc. C
COMP. FILE FILE NAME
TC55450. DOC

~~4.7 Filtration grade:~~

~~a) Solids: Beta 75(98.7% efficient) on 2 microns or greater.~~

~~b) Liquids : Beta 75(98.7% efficient) on 1 microns or greater.~~

5. Piping

5.1 The Pipe sizes and terminal points shall be as per the Seal Gas P&ID ~~indicated in variant table-4.~~

5.2 The exact pipe size and terminal points shall be finalised as per the project specific P&I diagram provided during detailed Engineering after the placement of order.

5.3 Vendor shall supply the companion flanges, gaskets, O-rings, Stud nuts, etc. for all flanged end connections.

5.4 All piping and other items shall be as described below

Item	**For rating upto #300**	**For rating upto #600**	**For rating #900 & # 1500**
Pipe Schedule	Schedule 80 S	Schedule 80 S	Schedule 160 S
Flanges & 2” Valves	# 300 RF	# 600 RTJ	**#900RTJ &** #1500RTJ **as applicable**
Fittings & Valves upto 1½”	SW # 3000 rating	SW # 3000 rating	BW # Sch 160
Fittings for 2”	BW # Sch 80	BW # Sch 80	BW # Sch 160
SS Piping/ Tubing for instruments and control valve	½” piping (schedule 80S) / 12.7x2.1 mm thk Tubing for primary seal inlet and vent lines (Please refer Table 4 and Material code for requirement of Piping / Tubing against this enquiry)		¾” piping (schedule 160S) for primary seal inlet and vent lines
	12.7mm x 2.1mm thk for Secondary & Barrier seal lines		
	6mm x 1mm thk for pneumatic line for control valve		

5.5 Materials shall be as described below. PMI to be done for all materials, fittings & weld materials.

Item	Seal gas inlet & vent upto flare	Sec.seal inlet & vent	Barrier seal inlet & vent
Pipes and tubes	SS 316L	SS 316	SS316
Flanges & Valves	SS 316L	SS 316	SS316
Fittings	SS 316L	SS 316	SS316
Manifolds	SS 316L	SS 316	SS316
Filters	SS 316L	SS 316	SS316

5.6 The dimension of all fittings shall be as per ASME/ANSI standard.

5.7 In general, the following type of valves shall be provided.

a) For piping root valves Globe valves shall be used.

b) For isolation, gate valves shall be used

c) For equalisation and bypass, globe valves shall be used

d) For instrument air, Ball valves shall be used

e) For throttling in secondary and barrier seal lines, needle/globe valves shall be used.

5.8 All Butt-welded joints shall be TIG welded and the welds shall be 100% radio graphed.

5.9 Vent/ Drain/ Any header shall be bigger in size than the individual lines connected to it.

5.10 Supports shall be provided for all items inclusive of pipelines/ tubing/instruments.

5.11 All lines shall be cleaned in order to remove all dust, rust, slag, and all other foreign particles from internal and external parts.

5.12 All the vent/ drain holes, if any shall be plugged with threaded plugs/caps.

5.13 All the instruments shall be provided with individual root isolating valves. The double valves shall be provided for all high-pressure (pressures more than 40 ata) isolation, equalization, vent & drains.

5.14 Design pressure **at 170° C** of all piping, valves, fittings, instruments, filters shall be as described below

Item	For #300 rating	For #600 rating	**For rating #900 & # 1500**
Primary seal inlet and vent lines	**30** Kg/cm^2(g)	**60** Kg/cm^2 (g)	**90 Kg/cm^2 (g) for #900 & 152 Kg/cm^2(g) for #1500**
Secondary & Barrier seal lines	20 Kg/cm^2 (g)	20 Kg/cm^2 (g)	20 Kg/sq.cm(g)

5.15 Hydro test pressures for seal gas filter skid and seal gas control skid shall be carried out with water after the instrument dismounting and isolation of tubing line. After the test the piping should be blown with air. The hydraulic pressure is as follows:

Item	**For #300 rating**	**For #600 rating**	**For rating #900 & # 1500**
Primary seal inlet and vent lines	**60 Kg/sq.cm(g)**	**120 Kg/sq.cm(g)**	**180 Kg/cm^2 (g) for #900& 300 Kg/cm^2(g) for #1500**
Secondary & Barrier seal lines	**30 Kg/sq.cm(g)**	**30 Kg/sq.cm(g)**	**30 Kg/sq.cm(g)**

5.16 The items used for Seal gas inlet & vent upto flare, the following shall be strictly followed

a) All austenitic stainless steel grades shall be solution annealed after welding.

b) Ferrite No. Test: For all austenitic stainless steels, the weld deposit shall be checked for ferrite content. Ferrite No. (FN) not less than 3% and not more than 10% is required to avoid sigma phase embrittlement during heat treatment. FN shall be determined by Ferrite scope prior to post weld heat treatment.

Form No. RT-E106 Rev D
COPYRIGHT AND CONFIDENTIAL
The information on this document is the property of BHARAT HEAVY ELECTRICALS LIMITED.
It must not be used directly or indirectly in any way detrimental to the interest of the
Ref. Doc. C
COMP. FILE FILE NAME
TC55450. DOC

c) All girth welded joints (longitudinal and circumferential) shall be 100% radiographed in accordance with UW-51 of ASME Section VIII, Div-1 and ASME Section V.

d) VALVES:

i. All valve castings shall be of radiographic quality.

ii. All cast valve flanges & bodies with flange rating of Class 1500 shall be examined in accordance with paragraphs 7.2 through 7.5 of Appendix-7 of ASME SEC-VIII, DIV.1, regardless of casting quality factor.

iii. Body / bonnet / cover joints & stuffing box of all valves shall have low emission and shall be helium leak tested as per ASME Sec.V, Subsection A, Article 10 (Detector Probe Technique), Appendix IV at a minimum of 25% of the allowable (rated) cold working pressure. Sampling for helium leak Test shall be one valve selected at random for each item of the material requisition. The failure of helium leak test shall call for testing of remaining valves of that item at vendor's cost. The valve shall show no leakage. No leakage is defined as a total leakage rate of less than 0.0001 ml/s of helium. Test Duration shall be 12 Minutes

iv. Casting and test bar shall be heat treated together. Valve casting shall be in solution heat treated and pickled condition.

v. Critical body and bonnet casing section typically defined by ASME B16.34 shall be radiographed and shall meet ASTM E446 (upto 2" thick) Category A,B & CA Level 2, Category CB, OC & CD Level 3, Category D,B & F Level 0. For wall thickness 2" to 4.5" comparable plates of ASTM E186 shall be used. ASTM E94 and ASTM E142 shall be used for recommended practice & controlling quality of radiography as guide. The entire surface of all castings shall be dye-penetrant inspected after pickling.

vi. Repair welds shall be 100% radiographed and evaluated in accordance with paragraph 344.5 of ASME B31.3 with a minimum casting quality factor of 0.95. Dye Penetration test shall be as per ASTM E165 Procedure B-2, Interpretation as per Appendix-8 of ASME-VIII Div.1.

6. Instrumentation

6.1 The detailed technical specifications of Instruments, Filter Regulators, Valves, Junction Boxes and other equipment shall be furnished by the vendor.

6.2 All instruments & junction boxes shall be weather proof to IP-65 and shall be certified suitable for use in intrinsic safe circuit and explosion proof for area classification IEC Zone-1, Gr. IIA, IIB and IIC, T3 certified by a statutory body.

6.3 All Instruments shall have internal terminal blocks of anti-vibration type for cable termination suitable for terminating a minimum of 1.5sq.mm size cable conductors. Flying Leads are not acceptable.

6.4 All the instruments shall have Proven Track Record of 8000 hours of successful uninterrupted operation.

Form No. RTD-E106
COPYRIGHT AND CONFIDENTIAL
The information on this document is the property of BHARAT HEAVY ELECTRICALS LIMITED.
It must not be used directly or indirectly in any way detrimental to the interest of the
Ref. Doc. C
COMP. FILE FILE NAME
TC55450. DOC

6.5 All the instruments and quantity shall be as specified ~~in Table-1~~.The project specific requirements shall be finalised after the order placement. All the instruments shall be of Smart type and compatible to Hart communication until and unless specified otherwise.

6.6 In some specific projects **as indicated in variants of table-4**, the transmitters connected to DCS shall be of Foundation field bus type. The instruments ~~and their accessories like field bus cables, connectors, junction boxes, etc~~ shall be supplied compatible for FF Bus.(~~FNICO~~/FISCO)

6.7 Vendor to confirm compliance for the sub-vendors ~~indicated as per Table-1.~~ For the items, which are not covered in the list or vendors are not indicated, vendor has to procure from their standard sub-vendors

6.8 Vendor shall confirm that the bill of material furnished along with offer is only indicative and the final BOM, which shall be furnished during detailed Engineering (after order placement) for the approval of BHEL. The additional items, if any required for complying BHEL specification at later stage or for the satisfactory working of the seals shall be supplied by vendor without any price/delivery implications.

6.9 The body of the control valves shall be as per Piping Material Specification and as a minimum trim shall be with stelliting.

6.10 The vendor shall furnish the following test certificates for the instruments

a) Calibration/ test certificates
b) Material test certificates
c) Sub-vendor conformity certificates.
d) Third part statutory certificates

6.11 Vendor shall submit necessary statutory body certificates for the instruments & Junction Boxes, cable glands, etc from the following statutory authorities.

a) BIS (Bureau of Indian Standards)
b) CIMFR, Dhanbad
c) Petroleum and Explosives Safety Organization (PESO), Nagpur India (earlier CCOE)

Please note that the above are mandatory for all flame proof instruments of Indian origin.

6.12 Vendor shall submit necessary statutory body certificates for the instruments & Junction Boxes, cable glands, etc from Petroleum and Explosives Safety Organization (PESO), Nagpur India (earlier CCOE) in addition to the certificates from the country of origin for all flame proof items of foreign origin.

6.13 All the Device Description (DD) and common file format (CFF) files for all HART and FF instruments shall be supplied in CD/DVD for configuration.

6.14 The earth connections of all electrical components shall be brought to common bar for further connection to earth pit at site.

6.15 Electrical Junction Box shall be with LM-6 body, 2Nos of Outlet Connections of 1½" NPT at bottom and 12nos of Inlets of size ½" NPT. All inlets and outlets shall be complete with double compression cable glands. Blanking plugs shall be provided for all spare inlets/outlets. Material of cable gland shall be Nickel plated Brass material with PVC hood.

Form No. RTD-E106
COPYRIGHT AND CONFIDENTIAL
The information on this document is the property of BHARAT HEAVY ELECTRICALS LIMITED.
It must not be used directly or indirectly in any way detrimental to the interest of the
Ref. Doc. C
COMP. FILE FILE NAME
TC55450. DOC

Cable glands, JB's and blanking plug shall be suitable for area Classification IEC Zone 1, Gas IIA, IIB and IIC "EExd" type Cable OD for outlet gland shall be furnished during detailed engineering. Telephone sockets and plugs shall be provided in JB. External paint shade Light Blue Shade 101 as per IS 5.

6.16 Signal cable shall be as follows:

6.16.1. Single pair 7 stranded/ 0.53 mm dia (1.5 mm2) annealed tinned copper conductors of electrolytic grade copper, PVC insulated.

6.16.2. FRLS type, armoured and of 1100V grade and shall meet insulation resistance, voltage and spark test requirements as per BS 5308 part-2.

6.16.3. Conductors as per BS6360

6.16.4. Pr. Insulation: Fire retardant (FR) shall be as per standard IEC 60332.Shall have mica insulation and shall be as per IEC-331 CAT –A type. Primary insulation and inner jacket of polyethylene with maximum capacitance of 80 pf/m.

6.16.5. Conductor DC resistance at 20° C : ≤ 12.3 ohms / km ; Inductance : ≤ 0.9 μ H /Km between conductors at 1000 HZ; Capacitance ≤0.06 μ F/ Km between conductors at 1000 Hz; Insulation resistance 100 M ohm / Km.

6.16.6. Color coding: Core insulation: Black & Blue; Inner Jacket: Black; Outer Jacket: Light blue for intrinsically safe application and black for others.

6.17 Spur cable between FF instruments and FF JB shall be Type A as per IEC61158 part2.

7. Instrument Installation Standards

7.1 The Pressure & DP Gauges shall be grouped as per operational requirement and mounted on the Gauge Board in the front side of the Skids.

7.2 All the instruments mounted on the skids shall be installed as per hook up diagrams (to be furnished during the detailed engineering). Based on these, Vendor shall develop & submit a tag number wise installation Standard (hook up) directory for all the instruments supplied/ mounted in the skids based on the above diagrams for BHEL/Customer approval.

7.3 The tubing for Control valves (from air filter regulator, I/P converter and control valve) shall be of stainless steel tubing and the same is in vendor's scope.

7.4 Integral manifolds shall be used if hook up is envisaged as tubing. Integral manifolds shall be used in piping hook-ups for 300#.

7.5 If hook up is specified as "piping" in the variant table-4, the piping hookup with welded joints shall be considered for primary seal gas inlet and vent lines. Installation of impulse lines shall be as per piping class.

7.6 Tubing for impulse line to instruments shall be made of SS 316L (for primary seal gas inlet and vent) or SS316 (for secondary seal inlet and vent, barrier seal inlet and vent) tube with double compression fittings of "Swagelok"/"Parker" make and of material SS 316L (for primary seal gas inlet and vent) or SS316 (for secondary seal inlet and vent, barrier seal inlet and vent).

7.7 Instead of union; flange to be used in all impulse pipes and tubes irrespective of class.

Form No. TC-55450 Rev D-
COPYRIGHT AND CONFIDENTIAL
The information on this document is the property of BHARAT HEAVY ELECTRICALS LIMITED.
It must not be used directly or indirectly in any way detrimental to the interest of the
Ref. Doc. C
COMP. FILE FILE NAME
TC55450. DOC

7.8 For pipe class 600# and above, the impulse piping shall be as per pipe class. In these cases no integral type manifold shall be used. 2-valve or 3-valve manifold shall be fabricated with gate valve and pipe. Equalization with globe valve only. Closed coupled installation shall be considered for high viscous services or hydrocarbons containing water for flow/pressure transmitter. The size (NB) of impulse pipe shall be ¾" for corrosive/congealing and high pressure services to avoid frequent chocking.

7.9 For pipe class below 600#, the impulse piping shall be as per pipe class. However small portion of tubing from impulse line to transmitter shall be made of tube with double compression fittings of "Swagelok"/"Parker" make. In those cases the tube material shall be suitable for that process fluid condition. In these cases the transmitter with integral manifold shall be used.

7.10 Bypass line with isolation valves must be provided for inline instruments like Rotameters, Integral orifice, Control/On-Off valves.

7.11 For impulse line with viscous / congealing services a tee off with blind flange shall be provided for cleaning purpose near to first isolation valve.

7.12 All the transmitters shall have horizontal impulse entry to have easy interchangeability.

7.13 The double valves (2 valves in series) shall be provided for all high-pressure (pressures more than 40 ata) isolation, vent & drain application.

7.14 The instruments shall not be mounted directly on its hook-up. The instruments shall first be mounted on gauge board / 2"pipe and then the hook-up shall be connected.

8. Electrical Installation

8.1 Junction boxes shall be weather proof to IP-65 and shall be certified suitable for use in intrinsic safe circuit and explosion proof for area classification IEC Zone-1, Gr. IIA, IIB and IIC, T3 certified by a statutory body, as specified in cause no 6.12.

8.2 Separate Junction box shall be provided for the following signals and grouping of instruments shall be carried out accordingly.

a) Analog Signals for DCS
b) Analog Signals for PLC
c) Field Bus Signals
d) Proximity signals
e) Digital signals
f) Solenoid valves
g) Intrinsic/Explosion proof signals

~~8.3 Field bus junction boxes (FNICO/ FISCO/HPT).~~

~~a) Junction boxes shall be provided with wiring/ termination blocks.~~

~~b) Each Fieldbus junction box shall contain wiring terminal blocks for two Fieldbus segments. Wiring / termination block for each segment shall have four spur connections. However vendor shall use only three spur connections and one shall be kept as spare for future connection.~~

Form Ref. No. TC-6-10
COPYRIGHT AND CONFIDENTIAL
The information on this document is the property of BHARAT HEAVY ELECTRICALS LIMITED.
It must not be used directly or indirectly in any way detrimental to the interest of the
Ref. Doc. C
COMP. FILE FILE NAME
TC55450. DOC

Form No. RT-E106 Rev D
COPYRIGHT AND CONFIDENTIAL
The information on this document is the property of BHARAT HEAVY ELECTRICALS LIMITED.
It must not be used directly or indirectly in any way detrimental to the interest of the

~~c) In each Fieldbus segment, only one close loop can be connected (if applicable), remaining spur connection in the segment can be used for open loop.~~

~~d) Wiring/ termination blocks shall have built-in short circuit protectors.~~

~~e) Vendor shall provide field terminator for each segment inside Fieldbus junction box.~~

~~f) The junction boxes shall have metallic enclosure.~~

8.4 Tag plates shall be provided for all the Equipment, instruments & cables. Cable tags shall be provided for both ends.

8.5 All components (instruments, valves, cable glands, junction box etc.) shall be identified by means of a plate placed on the structure with stainless material tearing rivets. All instruments shall have a second stainless steel plate fixed to the instrument body by means of a steel wire. The junction boxes shall be equipped with a second plate fixed to its cover by means of an oil-proof adhesive (Loctite or similar). ALL THE PLATES SHALL BE MANUFACTURED AND ENGRAVED ACCORDING TO PROJECT SPECIFIC P&ID.

8.6 Identification ferrules and lugs for termination shall be provided at junction box end and instrument end.

8.7 All the Electrical Instruments shall be neatly concealed wired and terminated in a local junction box requiring only connection to purchaser's wiring. The cable connecting the instrument to junction box shall be armoured.

8.8 Stainless Steel perforated Cable Trays shall be used for cable laying. The edges of cable trays shall be covered suitably using rubber sleeve.

8.9 The JB grouping and terminal allocation shall be as per BHEL cable schedule (provided during detailed engineering).

8.10 Junction boxes will be installed on the side plates of the panel; the distance between the bottom of these junction boxes and the ground must be at least 800 mm and 500 mm in case of adjacent boxes.

8.11 Seal gas gauge board shall be equipped with n°2 earthing bosses.

8.12 Inside each panel a SS bar measuring 16 mm^2, rectangular-sectioned shall be included for the connection of ground cables coming from the instruments or other.

9. The supplier shall furnish the following Documents

9.1 Along with offer:

a) Compliance for BHEL specification and its Annexures

b) Signed and stamped Filled up check-list (Table-2).

c) Price Schedule as per table-5.

d) Proven Track Record as indicated in Clause no 10.0.

e) Dew Point Curve.

9.2 Within 2 weeks of Placement of Order/ LOI:

a) Vendor shall visit BHEL office within one week of receipt of PO / LOI to collect the project specific information for engineering their drawings / documents.

Ref. Doc. C
COMP. FILE FILE NAME
TC55450. DOC

b) Vendor shall submit following in 10 sets for approval for the documents as mentioned below within 2 weeks of Placement of PO /LOI:

i. General Arrangement drawing of Gas Seal Control System Skids giving overall dimensions. It shall show location /disposition of various equipments/Instruments on the Rack and location of customer termination connection.

ii. Bill of Material of all the equipments, instruments, components etc. The Bill of Material should clearly show the make and model of each component, which are subjected to BHEL/CUSTOMER approval.

iii. Instruments Data sheets as per ISA format.

iv. Filled in dry gas seal system data sheet as per API format.

v. Quality assurance plan.

vi. Spares list

9.3 Final Documentation: Vendor shall furnish (17 sets of hard copies for a) to c) below + 2 DVD's for all documents mentioned below)

a) Documents mentioned 9.2 above.

b) Terminal wiring details of Junction Box.

c) Instruction, Service and Maintenance manual

d) Test and Inspection reports : 3 copies

e) Guarantee Certificates : 3 copies

f) Photographs for all views : 2 sets (In DVD, the digital photos shall be provided).

10. Acceptance Criteria

10.1 The offered Dry Gas Seal system skids (Control system and filter) shall be proven and validly similar to the specified operating parameters, process gas service, pressures and configuration as compared to at least TWO UNITS designed, manufactured, tested and supplied from the proposed manufacturing plant and at least one of these units shall have been successfully operated in the field for at least 8000 hours of continuous operation without any major overhaul as on the date of issue of enquiry.

10.2 Vendor shall furnish complete reference list / details (Proven track record) along with the offer. These details shall include Plant name, year of commissioning, number of operating hours completed and name of contact person(s) etc. for the skids similar to one being offered.

11. Inspection and Tests

All the equipments shall be subject to inspection and witness tests by BHEL/CUSTOMER/CONSULTANT. The schedule of quality checks shall be furnished by the vendor in the quality plan which is subject to the approval of customer/consultant/ BHEL. The minimum shall be as indicated in clause 12.0 below and Table-3 Quality Plan.

Form Rev No. TD-E10-6
COPYRIGHT AND CONFIDENTIAL
The information on this document is the property of BHARAT HEAVY ELECTRICALS LIMITED.
It must not be used directly or indirectly in any way detrimental to the interest of the
Ref. Doc. C
COMP. FILE FILE NAME
TC55450. DOC

12. Material tests for filter and Changeover Valve for Duplex Filter (as a minimum)

	Type of Check and Test	Certificate Designation	Type of Inspection
12.1	Chemical Analysis	Mills Certificates	Verification of test report certificates by Lloyds
12.2	Mechanical Tests	Certified check by manufacturer	- do -
12.3	Non destructive Tests (as per manufacturer's standard)	- do -	- do -
12.4	Hydrostatic Test (Filter Housing and valve body)	Witness	Lloyds
12.5	Degree of filtration (filter element)	Certificate from manufacturer	Verification of test report certificates by Lloyds

13. Marking and Shipping

13.1 Name plates

The Individual components shall be provided with Nameplates giving important details like make, model etc. Each component shall be provided with stainless steel Tag plates duly punching Tag Nos. as applicable on it.

13.2 Preparation for Shipment

a) Equipment shall be suitably prepared for shipment. The preparation shall make the equipment suitable for 6 months of outdoor storage from the date of shipment.
b) Each assembly shall be marked with details like, drawing no, job number, PO No. etc. at a convenient location.
c) Exterior carbon Steel surfaces shall be given at least two coats of Epoxy paint.
d) Flanges openings shall be provided with metal closures.
e) Pipe union openings shall be suitably closed with Swagelok (or Parker) fittings.
f) Lifting Points and lifting lugs shall be clearly identified.
g) All Loose supplied items like interconnection pipe and fittings between both assemblies, loose cable glands, spare filter cartridges, foundation bolts, etc., which are in Vendor's scope shall be listed out separately in the packing list.
h) Adequate amount of silica gel or equivalent shall be provided in the box before despatch for the removal of moisture till installation.
i) All safety instructions for storage and handling shall be indicated on external surface of the box.

Form No. RTD-E106
COPYRIGHT AND CONFIDENTIAL
The information on this document is the property of BHARAT HEAVY ELECTRICALS LIMITED.
It must not be used directly or indirectly in any way detrimental to the interest of the
Ref. Doc. C
COMP. FILE FILE NAME
TC55450. DOC

14. Guarantee

The Gas Seal Control System Skids and each component of the unit shall be guaranteed for ~~18 months~~ of trouble free performance from the date of shipment or ~~12 months~~ from the date of commissioning whichever is earlier

15. Bids

Technical bids and Price bids are to be submitted in separate sealed covers. Un-priced copy of the price bid shall be furnished along with Technical bid.

16. Services:

Vendor shall provide services of their engineers for commissioning of Gas Seal Systems at site for 7 working days

17. Training:

Vendor shall at no extra cost to the purchaser, undertake to train 4 engineers selected by the purchaser for a period of 5 working days at BHEL Hyderabad or Vendors works or site

18. SPECIAL NOTES

18.1 Vendor should bring out in his offer clause wise deviations if any, with respect to proposed supply along with price adder for withdrawing the deviation to comply with specification. Failure to highlight the same will be construed as acceptance on the part of the vendor to meet the requirement of this specification totally.

18.2 Vendor shall provide the relevant technical information and supporting documents whenever asked for by the customer/ consultant.

18.3 Vendor to clearly bring out any additional requirements which are essential for proper functioning of the dry gas seal system. This shall be included in the offer.

Form No. RT-E 106 Rev D
COPYRIGHT AND CONFIDENTIALITY
The information on this document is the property of BHARAT HEAVY ELECTRICALS LIMITED.
It must not be used directly or indirectly in any way detrimental to the interest of the
Ref. Doc. C
COMP. FILE FILE NAME
TC55450. DOC

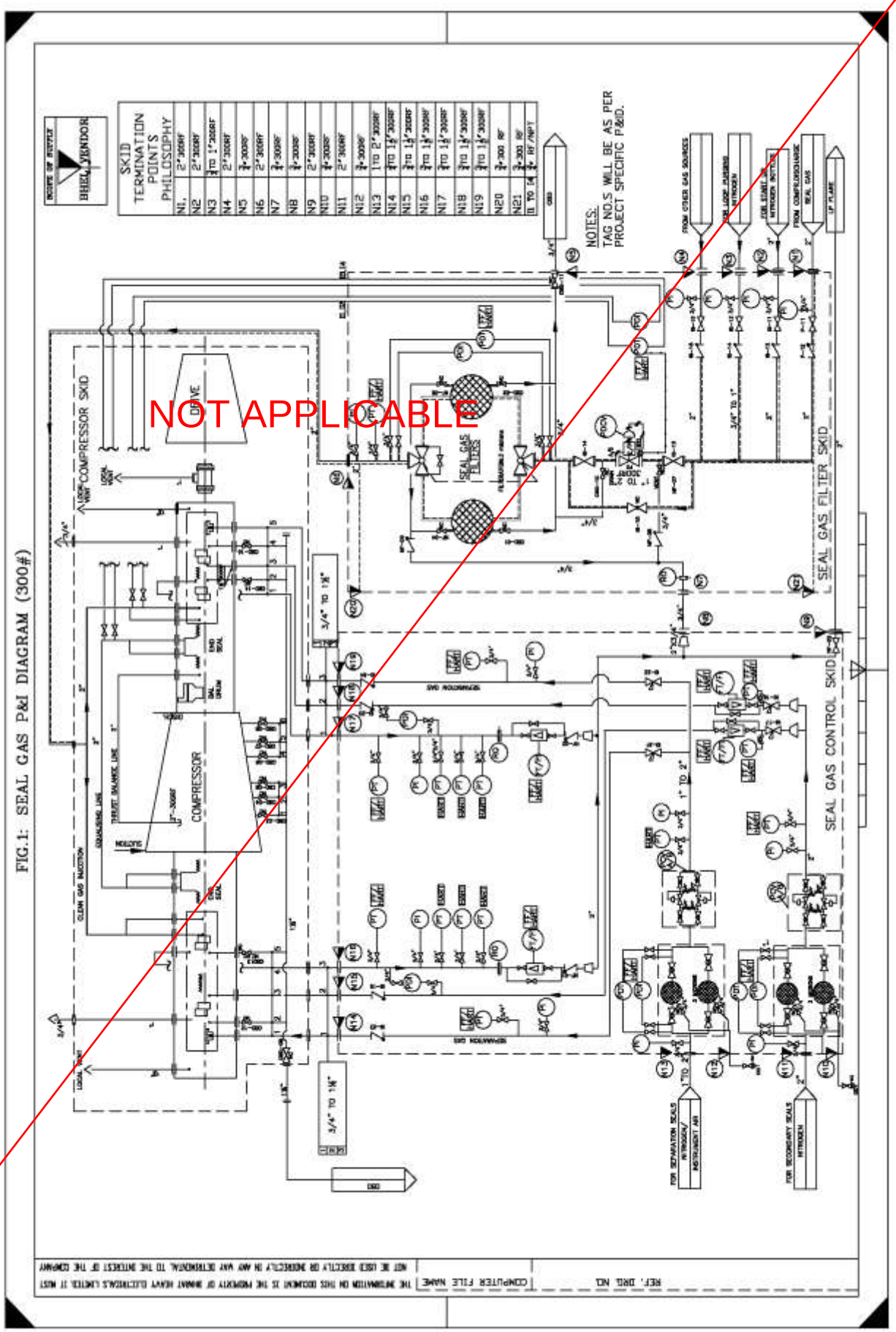

COPYRIGHT AND CONFIDENTIALITY

The information on this document is the property of BHARAT HEAVY ELECTRICALS LIMITED.

It must not be used directly or indirectly in any way detrimental to the interest of the

Ref. Doc. C

TC55450. DOC COMP. FILE FILE NAME

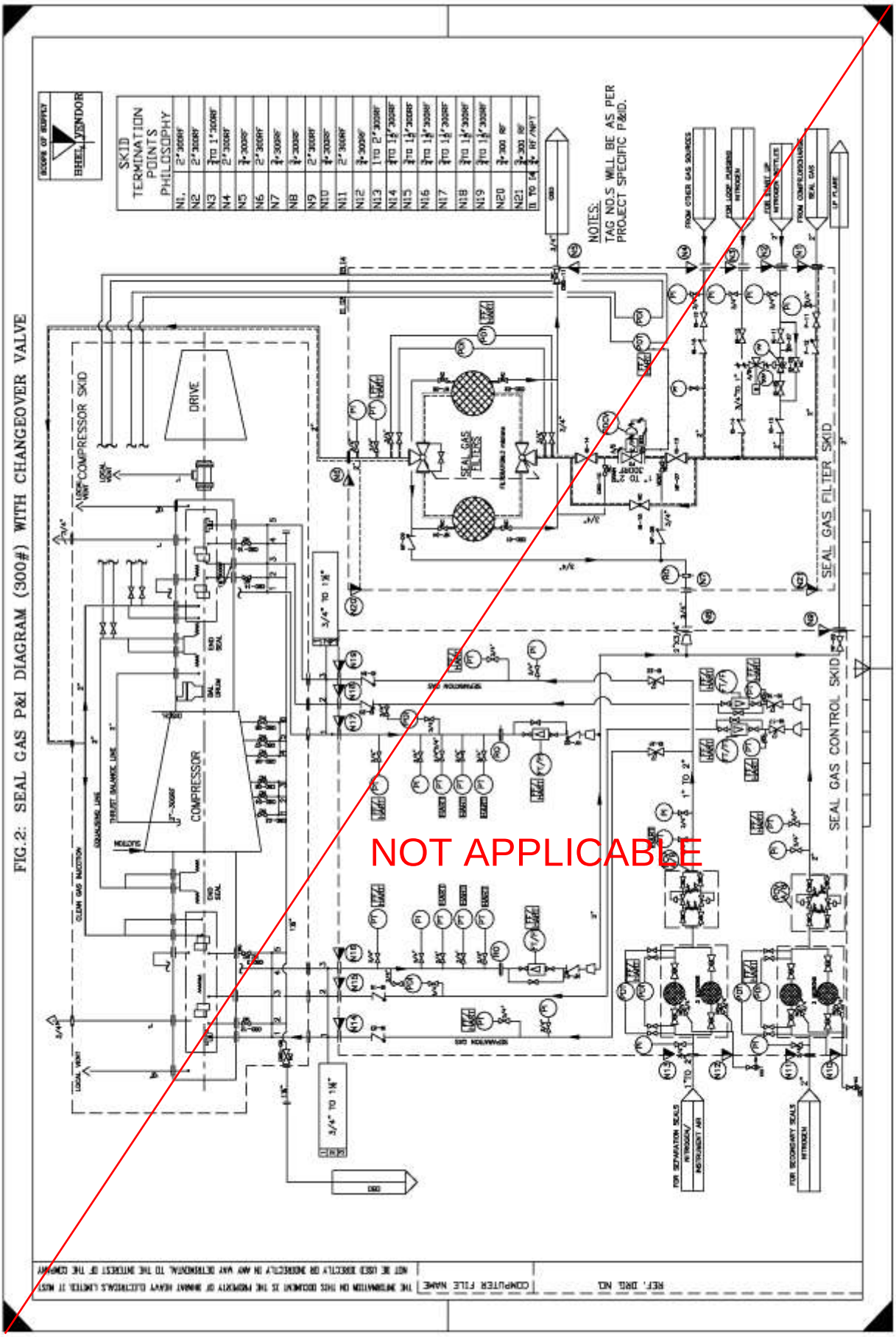

COPYRIGHT AND CONFIDENTIALITY

The information on this document is the property of BHARAT HEAVY ELECTRICALS LIMITED.

It must not be used directly or indirectly in any way detrimental to the interest of the

Ref. Doc. C

COMP. FILE FILE NAME

TC55450. DOC

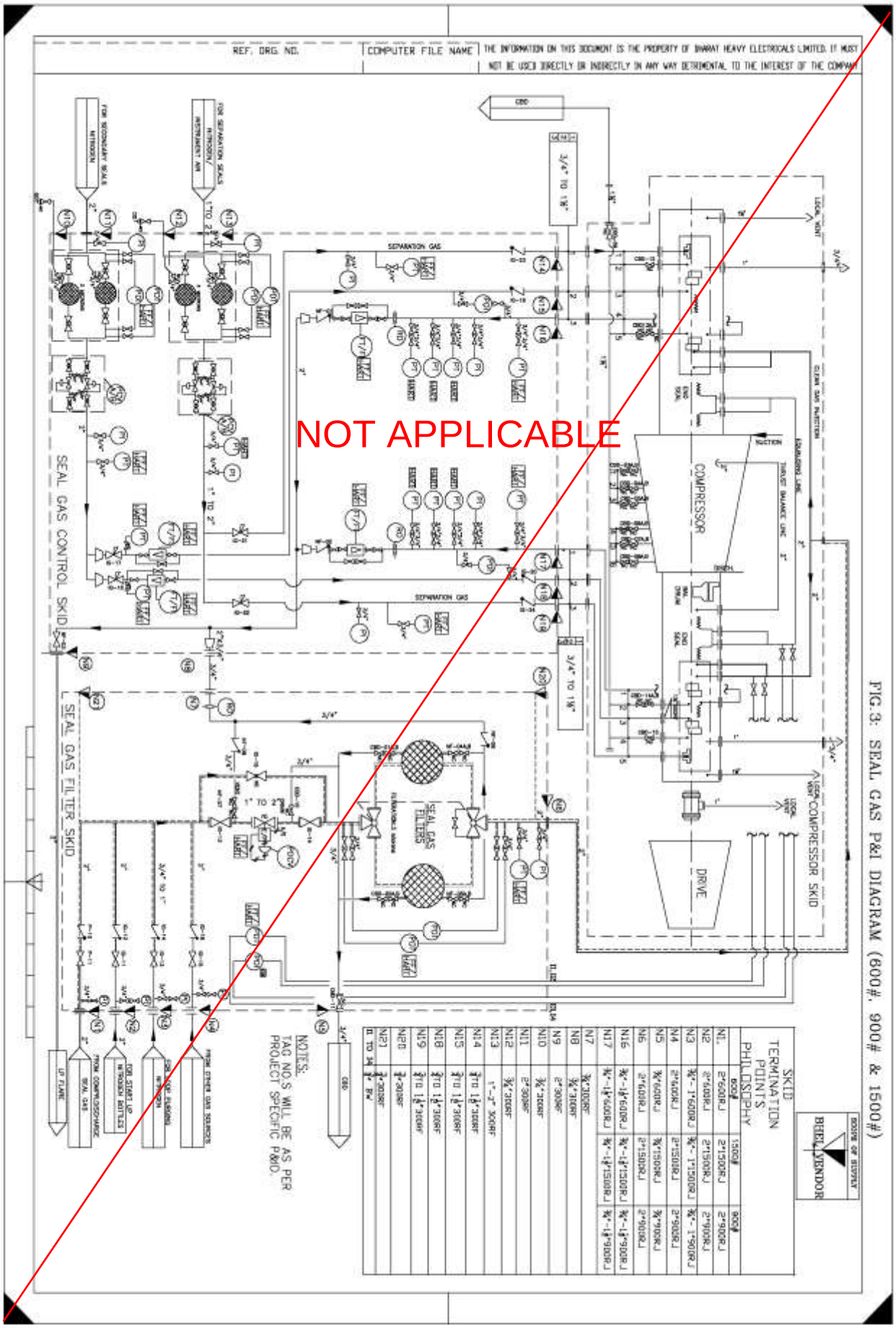

COPYRIGHT AND CONFIDENTIALITY

The information on this document is the property of BHARAT HEAVY ELECTRICALS LIMITED.

It must not be used directly or indirectly in any way detrimental to the interest of the

Ref. Doc. C

TC55450. DOC COMP. FILE FILE NAME

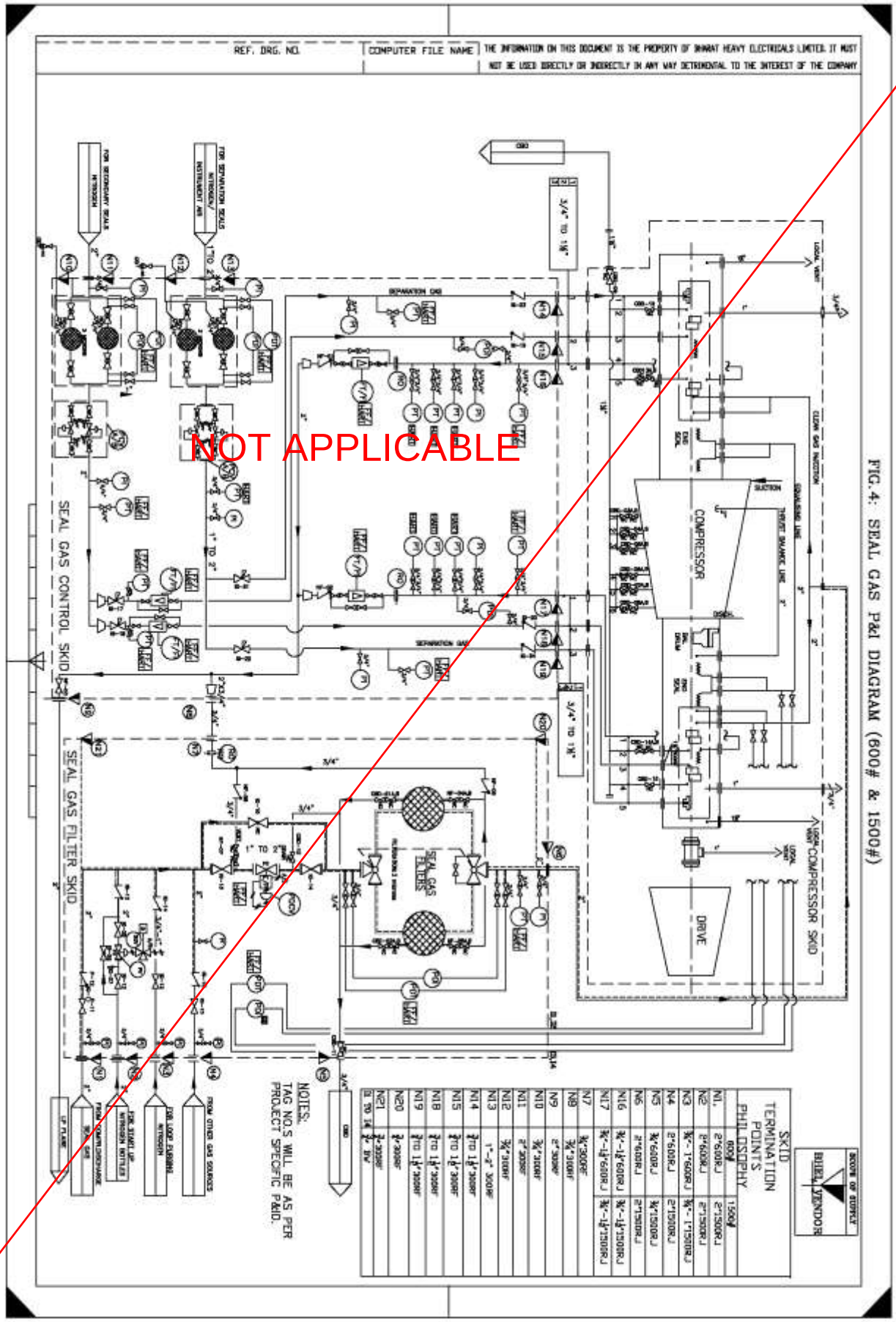

COPYRIGHT AND CONFIDENTIALITY

The information on this document is the property of BHARAT HEAVY ELECTRICALS LIMITED.

It must not be used directly or indirectly in any way detrimental to the interest of the

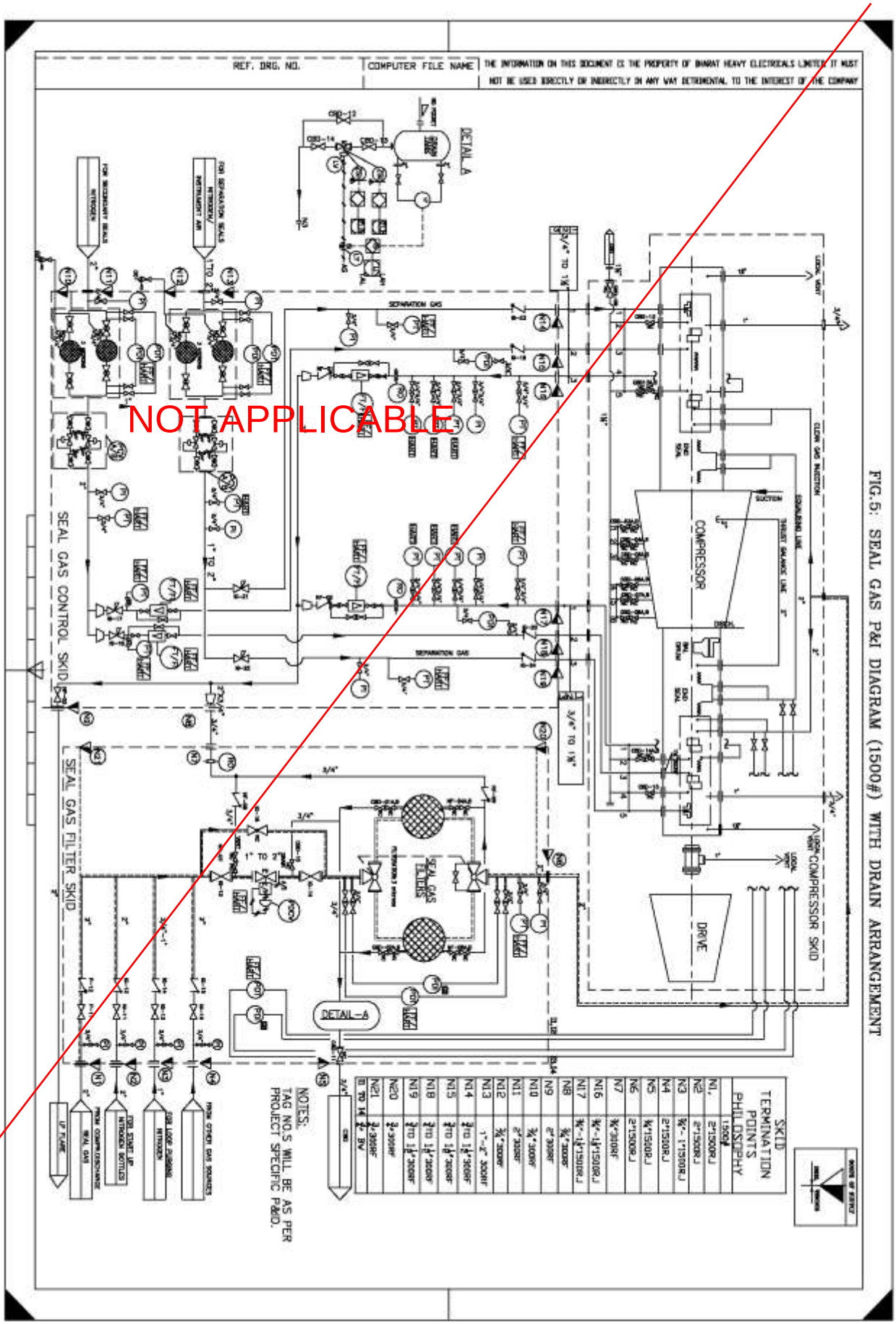

NOT APPLICABLE

COPYRIGHT AND CONFIDENTIALITY

The information on this document is the property of BHARAT HEAVY ELECTRICALS LIMITED.

It must not be used directly or indirectly in any way detrimental to the interest of the

Form No. RT-D-610

Ref. Doc. C

COMP. FILE FILE NAME

TC55450. DOC

Form No. RT-D-610
COPYRIGHT AND CONFIDENTIAL
The information on this document is the property of BHARAT HEAVY ELECTRICALS LIMITED.
It must not be used directly or indirectly in any way detrimental to the interest of the
Ref. Doc. C
COMP. FILE FILE NAME
TC55450. DOC

~~Table 1: Technical Specifications of Instruments and other components~~

(* Vendor to furnish Information along with offer)

SL. No.	Instrument	Qty Note (2)	Minimum Specification	Vendor	Model
1	Differential Pressure Gauges	6 nos.	Differential Pressure Indicator **IP66; panel mount** Range : * Dial Size : 150mm Pr.Conn. : 1/4"PT-F Static Pr. : 210 kg/cm2(g)	Switzer	109-V-E-2-6-0-S
2	Pressure Gauges	16 nos	Pressure gauge **IP67; panel mount** Accuracy: ± 1% of full scale Range : * Dial Size : 150mm Pr. Connections: 1/2"NPT-M Case and Bezel : All SS Construction Wetted parts : * Gold plating for diaphragm seal type in seal gas line Solid front type for seal gas line Over range protection: SS316	GIC/ WIKA/ WAREE	
3	Differential Pressure Transmitters	6 nos	Smart (Hart Protocol/ FF) Transmitters Range : * intrinsic safe & explosion proof IEC Zone 1,Gas IIA, B & C Min Load: 600 ohms All SS construction Pr. Connections: 1/2"NPT-F	Emerson	HART model: 3051CD 3A 07A1 J B7 KD L4 M5 Q4 QT T1 DF D1 TR FF model: 3051CD 3F 07 A1 J D01 B7 IE(or IA) L4 M6 Q4 T1 DF
			Accuracy: 0.075% of span Min. Static Pr.: 210 kg/cm2(g) LCD indicator In built lightning & surge protection Integral Manifold: SS 316L 3-way valve for DP and 2-way valve for pressure (Below 600# only. For 600# and above integral manifold not to be used) shall be included in the model number by the vendor SIL certified(for HART)	YIL	HART model: EJX 110A EH S4 GU 2 CEB/ V1U/A /D4/A1 FF model: EJX 110A FH S4 GU 2 CDB/ D4/ A / A1/ FS1(or KS2) / LC1/ D46
4	Pressure Transmitters	21 nos (for fig. 2 & 4) 17 nos (for fig. 1, 3 & 5)	Smart (Hart Protocol/ FF) Transmitters Range : * Others same as sl.no. 3	Emerson	HART model: 3051CG X A 07A1 J B7 KD L4 M5 Q4 QT T1 DF D1 TR Note : X is as per range FF(FNICO/FISCO) model: 3051CG X F 07A1 J D01 B7 IE(or IA) L4 M6 Q4 T1 DF Note : X is as per range

				YIL	HART model: EJX XXX A E X S4 GU 2 CEB/ V1U/A /D4/A1 Note : X is as per range
					FF model: EJX XXX A F X S4 GU 2 CDB/ D4/ A / A1/ FS1 (or KS2) / LC1/ D46 Note : XXX is as per range
5	Smart Positioner for DP control valve (sl.no 15)	1 no	Smart(Hart Protocol/ FF) Positioner with dual certification (Explosion proof and Intrinsic safe) and metallic housing "Valve's operating signatures" in the form of hard copy and also CD along with each control valve to be supplied with smart positioner.	Metso	HART model: ND 930 X H X1 T Note : X as per requirement
					FF model: ND 930 X F X1 T Note : X as per requirement
6	Flow Meters	4 nos	Metal Tube Variable Area flow meter (with 2 electrical entries with 1 blind plug), 2 wire	Krohne	H250/RR/X/MX/EG/ESK/ EEx Note : X as per requirement
			SMART (HART protocol /FF)		
			Range : *		
			intrinsic safe & explosion proof IEC Zone 1,Gas IIA, B & C		
7	Guided wave radar LT for drain pot	1no.	Smart (Hart Protocol/ FF) Transmitters	Emerson or E&H or Magnetrol or Krohne	
			Pr.conn: Flanged		
8	Diaphram seal type LT for drain pot	1 nos	Smart (Hart Protocol/ FF) Transmitters	Emerson	HART model: 3051CD 2A 02 A1 J S2 B7 KD L4 M5 Q4 QT T1 DF D1 TR + 1199 WDF XX A FFW 76 DA A 9 H U + 1199 MDF XX A FFW 76 DA A 9 H U Note : XX as per requirement
			Range : *		FF model: 3051CD 2F 02 A1 J D01 B7 IE(or IA) L4 M6 Q4 T1 DF + 1199 WDF XX A FFW 76 DA A 9 H U + 1199 MDF XX A FFW 76 DA A 9 H U Note : XX as per requirement
			Others same as sl.no. 3		
			Pr. Connections: 3" Flanged	YIL	Equivalent models for HART and FF
			Flush flange with spacer ring minimum SS316 with Flushing / Filling Connection (1/2"size)		
9	Magnetic level gauge for drain pot	1no.	Body matl.: SS 316L	Levcon or Chemtrols or Technomatic or Krohne	
			Pr.conn: 1" Flanged		
			The maximum visible range of a single gauge shall not exceed 1470 mm		

COPYRIGHT AND CONFIDENTIAL
The information on this document is the property of BHARAT HEAVY ELECTRICALS LIMITED.
It must not be used directly or indirectly in any way detrimental to the interest of the

			Ball check valve (offset design) required.		
10	Drain valve for drain pot	1no.	Smart/FF positioner as per sl.no 5 Others as per sl.no 15		
11	Change over valve in startup gas	1no.	On-off ball valve ANSI / FCI 70.2 Minimum class VI. the body as well as the actuator shall meet the testing requirements as per API 617 latest revision. Actuator: Pneumatic cylinder with spring return scotch yoke type SS, Universal type, IS or Exp.proof (as per project reqt.), Voltage (as per project reqt.) Solenoid valve : Make: Norgren or ASCO Proximity type IS SIL certified limit switches	Flowserve or IL, palghat or Koso, palghat or Tyco	
12	---	5 nos	Electrical Junction Box with LM-6 body	Baliga lighting or FCG flame proof control gears Or FCG Power Industries Or Flameproof Equipments P Limited	
13		2 nos	FF JB		FF JB Loose supply by BHEL. Vendor to make provision for mounting the same.
14	Duplex filter (Coalescing type) with change over transfer valve	1 nos	- Each filter 100% capacity with change over valve - Startup diff. Pr. : * - Max. Pr. For change over : * - Filter vessel : SS 316L - Change over valve : SS 316L	Forain Italy or Indfil Germany or Boll & kirch, Germany; or Hydac, Germany.	
15	Pneumatically operated control valve for DP control valve	1 nos	Material of body : SS 316 L Material of Trim : * Suitable for use in IEC Zone 1,Gas IIA, and IIB & IIC area. ANSI / FCI 70.2 Minimum class IV. Noise level shall not exceed 85db. Source treatment for noise shall be by using special trims like anti-noise trims, in case noise exceeds the allowable level. Bellow seal for corrosive & toxic gases like H2S, H2 etc. Actuator: Pneumatic diaphragm/ cylinder with spring return scotch yoke type	Fisher-Sanmar or IL, Palghat or Dresser valve India Pvt Ltd.	

COPYRIGHT AND CONFIDENTIAL
The information on this document is the property of BHARAT HEAVY ELECTRICALS LIMITED.
It must not be used directly or indirectly in any way detrimental to the interest of the
Ref. Doc. C
COMP. FILE FILE NAME
TC55450. DOC

16	Duplex Filter, regulator with SS housing and changeover transfer valve	2 nos.	As per system requirement	Norgren or Parker or or Boll & kirch, or Hydac	
17	In line check valves		As per system requirement	Audco or BDK or ATIPL	
18	Needle valves		As per system requirement	Audco or BDK or ATIPL	
19	Instrument root & Isolation valves		As per system requirement	Audco or BDK or ATIPL	
20	Tubes, Tube fittings and manifolds		As per system requirement	Swagelok / Parker Hannifin corp.	
21	Instrument cable	As reqd	Single pair 1.5 mm2.		
22	Spur Cable for FF instr.	As reqd	Type A as per IEC 61158-2	Belden	

~~Notes:~~

~~(1) All instrument makes shall be as per this list. Any item not covered in this list shall be from a reputed manufacturer unless otherwise specified in this specification elsewhere. For the items, which are not covered in the list or vendors not indicated, vendor has to procure from their standard sub-vendors.~~

~~(2) If the quantity indicated above is more than the numbers required as per project specific P&I diagram, the additional quantity with ranges same as used within skid shall be supplied loose.~~

~~(3) All the items of the same type of instrument shall be of same make.~~

Form No. RTD-E106
COPYRIGHT AND CONFIDENTIAL
The information on this document is the property of BHARAT HEAVY ELECTRICALS LIMITED.
It must not be used directly or indirectly in any way detrimental to the interest of the
Ref. Doc. C
COMP. FILE FILE NAME
TC55450. DOC

~~Table 2: Check List~~

~~(TO BE FILLED BY THE VENDOR AND SUBMITTED ALONG WITH THE OFFER WITH OUT WHICH OFFER WILL NOT BE CONSIDERED)~~

Cl.no	Description	Vendor's Confirmation (Yes/No)
9.1(a)	Compliance for BHEL specification and its Annexure	
2.1	Compliance to clause no 2.1.	
3.3,3.4, 5.1,5.4 & 5.5	Compliance of materials and sizes to clause no 3.3, 3.4, 5.1, 5.4 & 5.5.	
3.6(b)	The DEW point curve enclosed along with the offer.	
6.7	Compliance for the sub-vendors list indicated as per Table-1. For the items, which are not covered in the list or vendors not indicated, vendor has to procure from their standard sub-vendors. Vendor to confirm compliance for the same.	
6.8	Vendor shall confirm that the bill of material furnished along with offer is only indicative and the final BOM, which shall be furnished during detailed Engineering (after order placement) for the approval of BHEL. The additional items, if any required at later stage for complying BHEL specification or for the satisfactory working of the seals shall be supplied by vendor without any price/delivery implications.	
9.1(c)	Price Schedule as per table-5 enclosed. Also, signed filled copy of Price schedule (without prices) enclosed with technical offer	
9.1(d)	Proven Track Record as indicated in Clause no 10.0 enclosed.	
18.3	Any additional requirements which are essential for proper functioning of the dry gas seal system included in the offer.	

~~Vendor's Signature~~

~~Vendor's Company seal~~

COPYRIGHT AND CONFIDENTIAL
The information on this document is the property of BHARAT HEAVY ELECTRICALS LIMITED.
It must not be used directly or indirectly in any way detrimental to the interest of the

Form No. RTD-E106
COPYRIGHT AND CONFIDENTIAL
The information on this document is the property of BHARAT HEAVY ELECTRICALS LIMITED.
It must not be used directly or indirectly in any way detrimental to the interest of the
Ref. Doc. C
COMP. FILE FILE NAME
TC55450. DOC

Table – 3: Quality Plan

Sl. No.	Description	Type of check Quantum of check 100%	Ref. Documents	Type of Inspection	Agency
1	Assembly of Skids	- Location of equipment - Correctness of flow Schematics - Overall dimensions	- Approved GA drg. of Skids	Physical check	BHEL/ CUSTOMER
2	Welding (if applicable)	Type	Manufacturing drawings.	-Review of Radiograph certificate -Welding efficiency of 1	--Do--
3	Duplex Filter	- Material Certification - Hydrostatic test - Degree of filtration-Type Test	-BHEL/ CUSTOMER Specification - Approved drg./docts.	Verification of test report certificate	--Do--
4	Control Valves	- Calibration test certificate -Seat leakage test certificate -100% radiography test certificate (two shall be taken from each area to be tested) -magnetic particle test certificate -hardening test certificate -charpy test -confirmity test certificate -Material Certification - Explosion proof/ Intrinsic safe certification - Hydrostatic test - Control valve functional test	--DO--	- Verification - Review of Certificates	--Do--
5	Valves	- Material Certification - Hydrostatic test - Control valve functional test	--DO--	- Verification - Review of Certificates	--Do--
6	Pressure Gauges, Diff. Pr. Gauges,	- Make, Model - Materials Certification	--DO--	--Do--	--Do--

	Diff. Pr. Transmitters, I/P converters, DP Switch, Pr. Switches, Junction Box, Flow meters	- Calibration certification - Explosion proof/ Intrinsic safe certification			
7	Filter regulators, Valves	- Make, Model	--Do--	--Do--	--Do--
8	Piping/Tubing	- Materials Certification	--Do--	- Review of Mills certificates	
9	Pipe fittings and swagelok type fittings	- Materials Certification	--Do--	-Verifica-tion - Review of Certificates	--Do--
10	Instrument Hook-ups	- Material Certificate	--Do--	Review of certificates	--Do--
11	Line cleaning	Compliance	--Do--	Verification	--Do--
12	Hydraulic Testing of Piping	- Leakage	-Do--	Witness	--Do--
13	HP test with Helium or Nitrogen as per API 614	- Leakage	--Do--	Witness	--Do--
14	Air Leak test for the Hydraulic tested lines	- Leakage	--Do--	Witness	--Do--
15	Name Plates	- Correctness	--Do--	Physical check	--Do--
16	Painting - Pre-Treatment, Chemical Cleaning, Degreasing De-rusting and Phosphating - Two coats of Primer and Two coats of final Paint	- Thoroughness - Thoroughness	No Rust Finish	Physical check Physical check	Supplier BHEL/CUSTOMER
17	Wiring	- Continuity	Wiring diagram	Verification	--Do--

Form No. RTD-E 106
COPYRIGHT AND CONFIDENTIALITY
The information on this document is the property of BHARAT HEAVY ELECTRICALS LIMITED.
It must not be used directly or indirectly in any way detrimental to the interest of the
Ref. Doc. C
COMP. FILE FILE NAME
TC55450. DOC

Form No. RTD-E106
COPYRIGHT AND CONFIDENTIAL
The information on this document is the property of BHARAT HEAVY ELECTRICALS LIMITED.
It must not be used directly or indirectly in any way detrimental to the interest of the
Ref. Doc. C
COMP. FILE FILE NAME
TC55450. DOC

~~Table – 4: Variant Table~~

VAR NO.	DESCRIPTION	MATERIAL CODE	REMARKS
1	FILTER SKID- IOCL BARODA WGC	TC9755450017	
2	CONTROL SKID- IOCL BARODA WGC	TC9755450025	
3	FILTER SKID- BPCL-NET GAS-LP	TC9755450033	
4	CONTROL SKID- BPCL-NET GAS-LP	TC9755450041	
5	FILTER SKID- IOCL BARODA VGO	TC9755450050	
6	CONTROL SKID- IOCL BARODA VGO	TC9755450068	
7	NOT USED	NOT USED	
8	CONTROL SKID- BPCL NET GAS-HP	TC9755450084	
9	FILTER SKID- BPCL-CCR(MOTOR)	TC9755450092	
10	CONTROL SKID- BPCL-CCR(MOTOR)	TC9755450106	
11	FILTER SKID- IOCL VADODARA NHT	TC9755450114	
12	CONTROL SKID- IOCL VADODARA NHT	TC9755450122	
13	FILTER SKID- CPCL DHDT	TC9755450130	
14	CONTROL SKID- CPCL DHDT	TC9755450149	
15	FILTER SKID- GGSR-HPCL MITTAL	TC9755450157	
16	CONTROL SKID- GGSR-HPCL MITTAL	TC9755450165	
17	FILTER SKID- HMEL CCR	TC9755450173	
18	CONTROL SKID- HMEL CCR	TC9755450181	
19	FILTER SKID- HMEL DHDT	TC9755450190	
20	CONTROL SKID- HMEL DHDT	TC9755450203	
21	FILTER SKID- HMEL DCU	TC9755450211	
22	CONTROL SKID- HMEL DCU	TC9755450220	
23	FILTER SKID- ONGC TRIPURA	TC9755450238	
24	CONTROL SKID- ONGC TRIPURA	TC9755450246	
25	FILTER SKID- BRPL	TC9755450254	
26	CONTROL SKID- BRPL	TC9755450262	
27	FILTER SKID- MRPL DCU	TC9755450270	
28	CONTROL SKID- MRPL DCU	TC9755450289	
29	FILTER SKID- MRPL DHDT	TC9755450297	
30	CONTROL SKID- MRPL DHDT	TC9755450300	
31	FILTER SKID- GSFC-HP-2BCL 507	TC9755450319	As per CCI-MCA-1001-27
32	CONTROL SKID- GSFC-HP-2BCL 507	TC9755450327	As per CCI-MCA-1001-27
33	FILTER SKID- GSFC-BCL 407A	TC9755450335	As per CCI-MCA-1001-27
34	CONTROL SKID- GSFC-BCL 407A	TC9755450343	As per CCI-MCA-1001-27
35	FILTER SKID- GSFC-LP-2BCL 407A	TC9755450351	As per CCI-MCA-1001-27
36	CONTROL SKID- GSFC-LP-2BCL 407A	TC9755450360	As per CCI-MCA-1001-27

37	FILTER SKID- MRPL CHTU	TC9755450378	Item Same as M.code: TC9755450904
38	CONTROL SKID- MRPL CHTU	TC9755450386	Item Same as M.code: TC9755450912
39	FILTER SKID- MRPL PFCCU	TC9755450394	As per CCI-MCN-1001-27
40	CONTROL SKID- MRPL PFCCU	TC9755450408	As per CCI-MCN-1001-27
41	SGS SKID- TABRIZ	TC9755450416	As per CCI-CA217-27
42	SGS SKID- SPARES- TABRIZ	TC9755450424	As per CCI-CA217-27
43	Shifted to Table-4		
44	Shifted to Table-4		
45	Shifted to Table-4		
46			
47			
48			
49			
50			

Form No. RT-E106 Rev D
COPYRIGHT AND CONFIDENTIALITY
The information on this document is the property of BHARAT HEAVY ELECTRICALS LIMITED.
It must not be used directly or indirectly in any way detrimental to the interest of the
Ref. Doc. C
COMP. FILE FILE NAME
TC55450.DOC

Form No. RTD-E106
COPYRIGHT AND CONFIDENTIALITY
The information on this document is the property of BHARAT HEAVY ELECTRICALS LIMITED.
It must not be used directly or indirectly in any way detrimental to the interest of the

~~Table – 4: Variant Table~~

Var No	Description	Requirements		Material code	Reference P&ID
51	Seal gas Filter Skid	Rating: Insts Hookup: DCS Insts:	#300 Tubing HART Protocol	TC9755450513	Fig.1
52	Seal gas Control Skid			TC9755450521	Fig.1
53	Spares for Seal gas filter skid and control skid			TC9755450530	Fig.1
54	Seal gas Filter Skid	Rating: Insts Hookup: DCS Insts:	#300 Piping HART Protocol	TC9755450548	Fig.1
55	Seal gas Control Skid			TC9755450556	Fig.1
56	Spares for Seal gas filter skid and control skid			TC9755450564	Fig.1
57	Seal gas Filter Skid	Rating: Insts Hookup: DCS Insts: Startup Gas:	#300 Tubing HART Protocol With Changeover valve	TC9755450572	Fig.2
58	Seal gas Control Skid			TC9755450580	Fig.2
59	Spares for Seal gas filter skid and control skid			TC9755450599	Fig.2
60	Seal gas Filter Skid	Rating Insts Hookup DCS Insts Startup Gas:	#300 Piping HART Protocol With Changeover valve	TC9755450602	Fig.2
61	Seal gas Control Skid			TC9755450610	Fig.2
62	Spares for Seal gas filter skid and control skid			TC9755450629	Fig.2
63	Seal gas Filter Skid	Rating Insts Hookup	#300 Tubing	TC9755450637	Fig.1
64	Seal gas Control Skid			TC9755450645	Fig.1
65	Spares for Seal gas filter skid and control skid	DCS Insts	FF Instruments	TC9755450653	Fig.1
66	Seal gas Filter Skid	Rating Insts Hookup DCS Insts	#300 Piping FF Instruments	TC9755450661	Fig.1
67	Seal gas Control Skid			TC9755450670	Fig.1
68	Spares for Seal gas filter skid and control skid			TC9755450688	Fig.1
69	Seal gas Filter Skid	Rating Insts Hookup	#300 Tubing	TC9755450696	Fig.2
70	Seal gas Control Skid	DCS Insts	FF Instruments	TC9755450700	Fig.2

Ref. Doc. C
COMP. FILE FILE NAME
TC55450. DOC

71	Spares for Seal gas filter skid and control skid	Startup Gas	With Change over valve	TC9755450718	Fig.2
72	Seal gas Filter Skid	Rating Insts Hookup	#300 Piping	TC9755450726	Fig.2
73	Seal gas Control Skid	DCS Insts	FF Instruments	TC9755450734	Fig.2
74	Spares for Seal gas filter skid and control skid	Startup Gas:	With Changeover valve	TC9755450742	Fig.2
43	**Seal gas Filter Skid**	**Rating** **Insts Hookup**	**#600** **Piping/Tubing**	**TC9755450432**	**Fig.3**
44	**Seal gas Control Skid**	**DCS Insts**	**HART Protocol**	**TC9755450440**	**Fig.3**
45	**Spares for Seal gas filter skid and control skid**			**TC9755450459**	**Fig.3**
78	Seal gas Filter Skid	Rating Insts Hookup	#600 Piping/Tubing	TC9755450785	Fig.3
79	Seal gas Control Skid	DCS Insts	FF Instruments	TC9755450793	Fig.3
80	Spares for Seal gas filter skid and control skid			TC9755450807	Fig.3
81	Seal gas Filter Skid	Rating Insts Hookup	#600 Piping/Tubing	TC9755450815	Fig.4
82	Seal gas Control Skid	DCS Insts	HART Protocol	TC9755450823	Fig.4
83	Spares for Seal gas filter skid and control skid	Startup Gas:	With Changeover valve	TC9755450831	Fig.4
84	Seal gas Filter Skid	Rating Insts Hookup	#600 Piping/Tubing	TC9755450840	Fig.4
85	Seal gas Control Skid	DCS Insts	FF Instruments	TC9755450858	Fig.4
86	Spares for Seal gas filter skid and control skid	Startup Gas:	With Changeover valve	TC9755450866	Fig.4
87	Seal gas Filter Skid	Rating Insts Hookup	#1500 Piping	TC9755450874	Fig.3
88	Seal gas Control Skid	DCS Insts	HART Protocol	TC9755450882	Fig.3
89	Spares for Seal gas filter skid and control skid			TC9755450890	Fig.3

COPYRIGHT AND CONFIDENTIALITY
The information on this document is the property of BHARAT HEAVY ELECTRICALS LIMITED.
It must not be used directly or indirectly in any way detrimental to the interest of the

90	Seal gas Filter Skid	Rating	#1500	TC9755450904	Fig.3
91	Seal gas Control Skid	Insts Hookup	Piping	TC9755450912	Fig.3
92	Spares for Seal gas filter skid and control skid	DCS Insts	FF Instruments	TC9755450920	Fig.3
93	Seal gas Filter Skid	Rating	#1500	TC9755450939	Fig.5
94	Seal gas Control Skid	Insts Hookup	Piping	TC9755450947	Fig.5
95	Spares for Seal gas filter skid and control skid	DCS Insts Drain pot	HART Protocol System	TC9755450955	Fig.5
96	Seal gas Filter Skid	Rating	#1500	TC9755450963	Fig.5
97	Seal gas Control Skid	Insts Hookup	Piping	TC9755450971	Fig.5
98	Spares for Seal gas filter skid and control skid	DCS Insts Drain Pot	FF Instruments system	TC9755450980	Fig.5

Table – 4-A: Variant Table

75	Seal gas Filter Skid	Rating Insts Hookup	**#900** Piping/Tubing	TC9755450750	Fig.3
76	Seal gas Control Skid	DCS Insts	HART Protocol	TC9755450769	Fig.3
77	Spares for Seal gas filter skid and control skid			TC9755450777	Fig.3

COPYRIGHT AND CONFIDENTIAL
The information on this document is the property of BHARAT HEAVY ELECTRICALS LIMITED.
It must not be used directly or indirectly in any way detrimental to the interest of the

~~Table-5~~

~~PRICE SCHEDULE~~

~~SEAL GAS CONTROL SYSTEM~~

~~Enquiry ref. No:~~ - - - - - - ~~Date:~~
~~Offer ref no.~~ - - - - - - - ~~Date:~~

Sl no.	DESCRIPTION	Qty	PRICE
01	Seal Gas Control system consists of the following	1 set	
	a) Seal Gas Filter Skid		
	b) Seal Gas control skid		
	c) Filter cartridges – 5 sets		
	d) Matting flanges & accessories for all terminal points– 1 set		
	e) Loose supplied items		
02	Seal Gas Control system Spares as per following	**1 set** The word "TYPE" means the make, model no, range, size/length, rating, material as applicable	
	a) Pressure Gauges, Differential Pressure Gauges, level gauges-10% or min 1 no. each type.		
	b) Transmitters (both Fieldbus and SMART) for Pressure, Level, Variable area Flow & Differential Pressure-10% or min.1 no each type.		
	c) Control valve spares-10% or min 1 no. each type of the following: i. Proximity type limit switches. ii. Airfilter Regulator. iii. Solenoid valve. iv. Bonnet Gasket/Special Gasket. v. Gland packing. vi. Stem seal o-rings/Piston o-ring. vii. SMART/Fieldbus positioner. viii. Trim set. ix. Diaphragm, actuator assembly		
	d) Manifolds- 3.way and 5 way, isolation valves, instrument valves, tube fittings, check valves, filter regulators -10% or min.1 no each type.		
03	Optional offer for addition of each of the following instrument inclusive of root valves, piping, & installation materials etc.		
	a) Pressure Transmitter	1 set	
	b) DP Transmitter	1 set	
	c) Pressure Gauge	1 set	
	d) DP Gauge	1 set	
	e) Smart Positioner as per sl.no 5 of table-1	1 set	
	f) Solenoid valve.	1 set	
	g) Variable area Flow transmitter.	1 set	
04	Additional price to with draw the deviations to following clauses:		

~~Note:~~

~~(1) The individual prices for the spares and optional items against sl nos 02 and 03 above are valid for one year to order as and when the requirement arises.~~
~~(2) Any additional requirements which are essential for proper functioning of the dry gas seal system but not indicated in specification are included in the offer.~~

-

-

~~**Vendor's signature & seal**~~

COPYRIGHT AND CONFIDENTIALITY
The information on this document is the property of BHARAT HEAVY ELECTRICALS LIMITED.
It must not be used directly or indirectly in any way detrimental to the interest of the

Rev. No.	Date	Revision Details	Revised	Approved
00	03.03.2008	New Standard	--	AK
01	02.05.2009	Insulation requirement added	RAM	AK
02	13.12.2009	Generally revised and variants added	VJK	VVS
03	17.09.2010	Variants 43,44,45 added, Changes Highlighted	RAM	VVS

COPYRIGHT AND CONFIDENTIALITY
The information on this document is the property of BHARAT HEAVY ELECTRICALS LIMITED.
It must not be used directly or indirectly in any way detrimental to the interest of the

Form No. RT-E 106
Ref. Doc. C
COMP. FILE FILE NAME TC55450.DOC

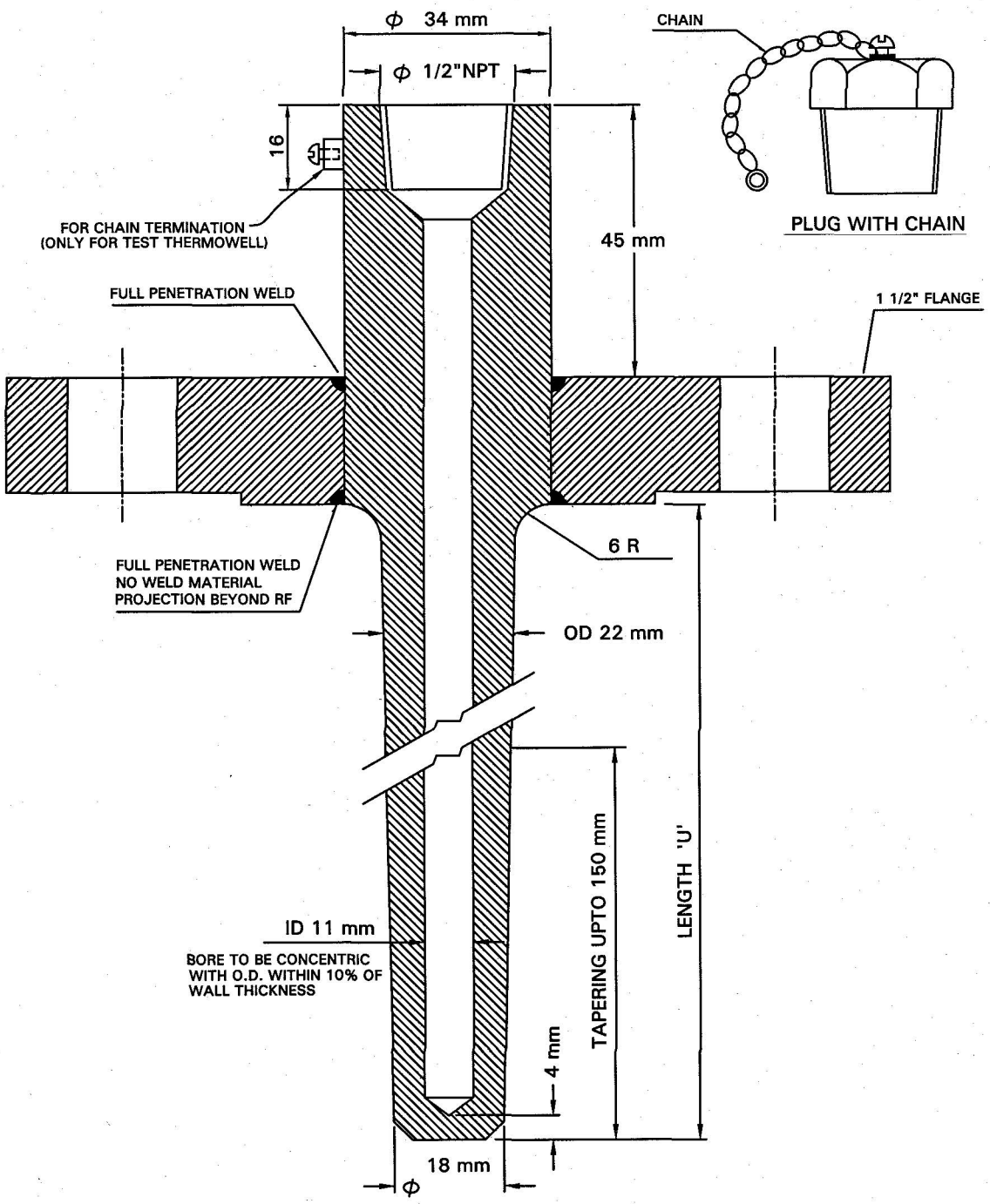

NOTES -

1. THIS STANDARD IS APPLICABLE FOR ;
   a) TEMPERATURE GAUGES, BEADED TEMPERATURE ELEMENTS AND DUPLEX TEMPERATURE ELEMENTS.
   b) *THERMOWELL UPTO 1500# ANSI RATING OR EQUIVALENT.*
2. TYPE OF FLANGE SHALL BE RTJ TYPE FOR ANSI RATING ⩾ 600#.
3. DP TEST SHALL BE CARRIED OUT FOR ALL WELD JOINTS.
4. CHAIN AND PLUG SHALL BE APPLICABLE ONLY FOR TEST THERMOWELLS.

Rev. No.	Date	Purpose	Prepared by	Checked by	Stds. Committee Convenor	Stds. Bureau Chairman
2	21-06-06	REVISED & REISSUED	MN	TGM	PM	VJN

Approved by

Copyright EIL - All rights reserved

Annexure-4-2

वाल्वों के लिए तकनीकी टिप्पणियाँ

TECHNICAL NOTES FOR VALVES

Rev. No	Date	Purpose	Prepared by	Checked by	Standards Committee Convenor	Standards Bureau Chairman
					Approved by	
7	13.07.17	REVISED AND ISSUED AS STANDARD SPECIFICATION	PK	SH	MI	RN
6	04.08.10	REVISED AND ISSUED AS STANDARD SPECIFICATION	RN	ATD	SC DM	ND
5	04.07.08	REVISED AND ISSUED AS STANDARD SPECIFICATION	RN	SC	DM	VC
4	15.11.00	REVISED AND ISSUED AS STANDARD SPECIFICATION	RN	BRB	NS	MI
3	04.04.94	ISSUED IN LINE WITH GENERAL REVISION	AKG	NS	GRR	AS

Copyright EIL – All rights reserved

Abbreviations:

AARH	:	Arithmetic Average Roughness Height
ANSI	:	American National Standards Institute
API	:	American Petroleum Institute
ASME	:	American Society of Mechanical Engineers
ASTM	:	American Society for Testing & Materials
BGO	:	Bevel Gear Operator
BHN	:	Brinnel Hardness Number
BIS	:	Bureau of Indian Standards
BS	:	British Standard
BVIS	:	Bureau Veritas Industrial Services
BW	:	Butt Weld
CAT	:	Category
CEIL	:	Certification Engineers International Limited
CS	:	Carbon Steel
DFT	:	Dry Film Thickness
DNV	:	Det Norske Veritas
DP	:	Dye-Penetrant
eDMS	:	Electronic Document Management System
IBR	:	Indian Boiler Regulations
IGC	:	Inter Granular Corrosion
IS	:	Indian Standard
LT	:	Low Temperature
LTCS	:	Low Temperature Carbon Steel
MOV	:	Motor Operated Valve
MP	:	Magnetic Particle
MR	:	Material Requisition
NDT	:	Non Destructive Testing
PMI	:	Positive Material Identification
PO	:	Purchase Order
PR	:	Purchase Requisition
RFQ	:	Request for Quotation
SCRD	:	Screwed
SS	:	Stainless Steel
SW	:	Socket Weld

Piping Standards Committee

Convenor : Mr M. Ismaeel

Members : Mr. Amrendra Kumar
Mr. G. Balaji
Mr. Udayan Chakravarty
Mr. K.J. Harinarayanan (S&ME)
Mr. S. Ghoshal (Process-2)
Mr. G.K. Iyer (Projects)
Mr. Pankaj Kumar Rai (Construction)

Copyright EIL – All rights reserved

CONTENTS

1.0 GENERAL 4
2.0 DOCUMENTATION 4
3.0 DESIGN AND CONSTRUCTION 5
4.0 OPERATION 9
5.0 INSPECTION AND TESTING 9
6.0 RADIOGRAPHY OF CAST VALVES 10
7.0 IBR CERTIFICATION 11
8.0 MARKING 11
9.0 DESPATCH 11
10.0 ATTACHMENTS 12
11.0 REFERENCES 12

Copyright EIL – All rights reserved

1.0 GENERAL

1.1 Vendor shall supply valves in accordance with the valve specification sheets along with auxiliaries, if any, such as gear operator, bypasses, drains, locking arrangements etc. wherever specified in the specification sheets, subject notes and other enclosures to the material requisition (MR).

1.2 Vendor shall quote in strict accordance with the valve data / specification sheets, subject technical notes and all other enclosures to the MR. For 'Cat-I valves', no deviations whatsoever shall be accepted. Post Order Waiver/ Deviation format 5-0000-0180-F1 as mentioned in Cl. 5.17 of specification for Quality Management System Requirements from Bidder (6-78-0001) is not applicable for Cat-I valves. For Cat-II Valves, if exceptions/ deviations become absolutely must, the same shall be requested as explained in clause 2.3.6 giving reasons for seeking such exceptions/ deviations.

1.3 All codes and standards for manufacture, testing, inspection etc. shall be of latest editions as on issue date of RFQ.

2.0 DOCUMENTATION

2.1 All document submissions to EIL shall be through EIL eDMS.

2.2 For 'Cat-I' valves, no documents shall be submitted with the offer.

2.3 For 'Cat-II' valves, vendor shall submit the following documents with the offer:

2.3.1 Manufacturer's complete descriptive and illustrative catalogue / literature.

2.3.2 Detailed dimensioned cross section drawing with parts / material lists, weight etc.

2.3.3 Drawings for valves with accessories like gear operator, hydraulic / pneumatic operator, motor, extension bonnet, extended stems with stands, bypass etc. giving major salient dimensions.

2.3.4 One copy of the valve specification sheets signed as "Accepted" by the manufacturer. Deviations, if any shall be marked as applicable on the valve specification sheet.

2.3.5 If the valve is regretted or has no deviation, the manufacturer shall write clearly on valve specification sheets as "Regret" or "No Deviation".

2.3.6 For 'CAT-II' valves, if there is any deviation, the same shall be listed clausewise.

2.3.7 On failure to submit documents as specified in clauses 2.1.1 to 2.1.6 above, the offer is likely to be rejected.

2.4 The following documents shall be submitted through eDMS of EIL after placement of the order:

2.4.1 For Cat-I valves to manufacturers' standard specified in MR/valve specification sheet, detailed dimensioned cross section drawing with parts, materials, weight, etc. shall be submitted for records/information.

Copyright EIL – All rights reserved

2.4.2 For 'Cat-II' valves, Vendor shall submit for review drawings mentioned in clauses 2.1.2 & 2.1.3 before start of manufacture. No other drawings shall be submitted for review.

2.4.3 Test report shall be supplied for all mandatory tests as per the applicable code. Test reports shall also be furnished for any supplementary tests as specified in clauses 3.13, 3.14 & 3.15.

2.4.4 Material test certificates (physical properties, chemical composition & heat treatment report) of the pressure containing parts shall be furnished for the valves supplied. Material test certificates for the other parts shall also be furnished for verification during inspection.

2.5 In addition to submissions through EIL eDMS, Catalogues/Drawings shall be in submitted in hard copies (6 sets) and soft copies (2 CDs/DVDs) along with delivery for Purchaser's record for all categories/types of valves.

3.0 DESIGN AND CONSTRUCTION

3.1 Valve shall be designed, manufactured, tested, inspected and marked as per the manufacturing standards, design codes and standards indicated in the respective valve specification sheets. Any conflict between the requisition, enclosures, specification sheets and referred standards/ codes shall be brought to the notice of the purchaser for clarifications and resolution, before proceeding with the manufacture. The purchaser's decision shall be final and binding to the vendor. The drawings submitted for review shall not include any deviations except as communicated in writing in Deviation permits. The Drawings shall be reviewed only for design and construction features.

3.2 All flanged valves shall have flanges integral (except forged valves) with the valve body. Flange face finish shall be normally specified in the valve specification sheet as 125 AARH etc. The interpretation for range of face finish shall be as follows:

Stock Finish	:	1000 μ in AARH max.
125 AARH	:	Serrations with 125 to 250 μ in AARH
63 AARH	:	32 to 63 μ in AARH

3.3 For all weld end valves with bevel end as per ASME B16.25, the contour of bevel shall be as follows:

Material	Wall Thickness	Weld Contour
Carbon Steel (Except Low Temp. Carbon Steel)	Upto 22 mm	Figure 2 Type A
	> 22 mm	Figure 3 Type A
Alloy Steel, Stainless Steel & Low Temp. Carbon Steel	Upto 10 mm	Figure 4
	> 10 mm & Upto 25 mm	Figure 5 Type A
	> 25 mm	Figure 6 Type A

Valve ends shall match thickness of the connecting pipe. Sloping of inside contour of valves shall be done wherever necessary to achieve this.

Copyright EIL – All rights reserved

3.4 For flanged valves with ring joint flanges the hardness shall be as follows:

Flange Material	Min. Hardness of Groove (BHN)
Carbon Steel	140
1% Cr to 5% Cr, 9% Cr	150
Type 304, 316, 321, 347	160
Type 304L, 316L	140

3.5 Following requirements for check valves shall be met over and above the valve specification sheet requirements:

3.5.1 Unless specified otherwise in the data sheet all check valves 3" & above (except in 900#, 1500# & 2500# rating) shall have a drain boss at location "G" (Refer Fig.No.1 of ASME B16.34) where pocket is formed in valve body. A tapped drain hole with plug shall be provided as per ASME B16.34. Threads shall be as per ASME B1.20.1 (Taper) NPT.

3.5.2 For heavy check valves, provisions shall be available for lifting by way of lugs, eye bolts and other such standard devices.

3.6 If an overlay weld-deposit is used for the body seat ring seating surface, the corrosion resistance of the seat ring base material shall be at least equal to the corrosion resistance of the material of the shell.

3.7 Following valve bypass requirements shall be met:

3.7.1 By-pass requirement for Gate valves shall be as follows unless otherwise mentioned.

ASME 150 Class	On sizes 26" and above
ASME 300 Class	On sizes 16" and above
ASME 600 Class	On sizes 6" and above
ASME 900 Class	On sizes 4" and above
ASME 1500 Class	On sizes 4" and above
ASME 2500 Class	On sizes 3" and above

3.7.2 The by-pass piping arrangement shall be such that clearance between main valve body and by-pass assembly shall be the minimum possible for layout reasons. Vendor shall follow the sketch enclosed in Specification No. 6-44-0052-A1.

3.7.3 By-pass valve shall be a globe valve. The sizes shall be as under:

On main valve ≤ 4"	:	1/2"
On main valve 6" to 8"	:	3/4"
On main valve 10" & above	:	1"

By-pass piping shall be of same metallurgy as main valve. The by-pass piping, fittings and valve tag numbers shall be as specified in Specification No. 6-44-0052-A2. In case details of by-pass arrangement for any Valve tag number is missing, Vendor shall bring the same to notice of EIL and provide by-pass as per details specified.

3.7.4 Vendor shall supply the by-pass valve duly tested and fitted to the main valve. Valves with by-pass shall have the direction of flow marked on the main valve. By-pass attachment to the

Copyright EIL – All rights reserved

main valve body shall not be screwed. All fillet welds for by-pass installation shall be 100% examined by DP/MP test and Butt-weld joints shall be 100% examined by radiography.

3.8 Valve body / bonnet shall be forged / cast as specified. Forgings are acceptable in place of casting but not vice-versa.

3.9 Stem shall be forged or machined from forged / rolled bar. No casting is permitted. However, integral stem of cast material is acceptable for Plug valves.

3.10 Stelliting / hardfacing by deposition, shall be minimum 1.6 mm.

3.11 Renewable seat rings shall be seal welded for valves of size 3" and above to prevent loosening in service.

3.12 For Low Temperature & Cryogenic valve requirements, refer Specification.No.6-44-0052-A3 unless otherwise specified.

3.13 For Hydrogen service valve requirements, refer Specification.No.6-44-0052-A4 unless otherwise specified.

3.14 Valves under 'NACE' category shall meet the requirements specified in MR-0103 unless otherwise specified.

3.15 For all austenitic stainless steel valves Inter Granular Corrosion (IGC) test shall be conducted as per the following:

3.15.1 ASTM A262 Practice 'B' with acceptance criteria of '60 mils/year (max.)' for all materials - forged, rolled, wrought and casting.

Or

ASTM A262 Practice 'E' with acceptance criteria of 'No cracks as observed from 20X magnification' for all materials other than castings. 'Microscopic structure to be observed from 250X magnification' in addition.

3.15.2 When specifically asked for in MR for high temperature application of some grades of austenitic stainless steel (eg. SS309, 310, 316, 316H etc.) ASTM A262 Practice 'C' with acceptance criteria of '15 mils/year (max.)' shall be conducted.

3.15.3 For the IGC test as described in Clauses 3.15.1 & 3.15.2, two sets of samples shall be drawn from each solution annealing lot. One set shall correspond to the highest Carbon content and the other to the highest pressure rating. When testing is conducted as per practice 'E', photograph of the microscopic structure shall be submitted for record.

3.16 All types of 321 or 347 stainless steel valves shall be in a stabilised heat treated condition. Stabilising heat treatment shall be carried out subsequent to the normal solution annealing. Soaking temperature and holding time for stabilising heat treatment shall be 900°C and 4 hours respectively.

3.17 Spiral wound bonnet gaskets are to be provided with inner/outer ring except when encapsulated gaskets type body-bonnet joints are employed. Outer ring may be avoided in case of non-circular spiral wound gasket used in 150# valve provided the outermost layer of spiral touches the bolts ascertaining the centering.

3.18 All Stainless Steel Castings shall be solution heat treated.

Copyright EIL – All rights reserved

3.19 Only normalized and tempered material shall be used in the following specifications :

Castings : A217 Gr.WC1, A217 Gr.WC4, A217 Gr.WC5, A217 Gr.WC6, A217 Gr.WC9, A217 Gr.C5, A217 Gr.C12

Forgings : A182 Gr.F11 Cl.2, A182 Gr.F12 Cl.2

3.20 Ball / Plug / Butterfly Valves

3.20.1 As a prequalification, fire safe test as per API 607 / API 6FA / BS EN ISO 10497 (Supersedes BS 6755 Part II) shall be carried out on soft seated ball, plug & butterfly valves and also on lubricated plug valves The test shall be witnessed and certified by a third party inspection agency like Lloyds, BVIS, DNV or EIL/ CEIL unless otherwise specified. The vendor has to submit test certificate for the particular design of the valve offered, if fire safe design is required as per the Valve Material Specification sheet..

3.20.2 Each valve shall be supplied with a lever / wrench except for gear operated / motor operated valves.

3.20.3 Soft-seated ball, plug & butterfly valves shall be supplied with antistatic devices.

3.20.4 BW / SW end ball valves shall have a 100 mm long seamless pipe nipple welded to each end of the valve. Nipples are to be welded prior to assembling Teflon seats / seals. Specifications of the nipples shall be as indicated in the MR.

3.20.5 The face-to-face dimensions of all ball valves shall be same as those of gate valves of the corresponding ANSI class (except 10" onwards in Class 150 where the face-to-face dimensions shall be as per API 6D long pattern).

3.20.6 The ball of ball valve shall not protrude outside the end flanges of valve.

3.20.7 Ball valves shall be of floating ball/trunnion mounted type as per following:

150#	8" & below	Floating ball
	10" & above	Trunnion mounted
300#	4" & below	Floating ball
	6" & above	Trunnion mounted
600# & above	1.5" & below	Floating ball
	2" & above	Trunnion mounted

3.20.8 Unless otherwise specified in the data sheets, bore of all reduced bore ball valves shall be limited to one size lower than the nominal bore.

3.21 The MOVs are to be installed in an open area and the actuators shall be suitable for all weather conditions. The testing of complete assemblies of MOVs along with the actuators shall be done by the supplier at his works.

3.22 Ends of flanged valves of 22" size shall match corresponding flanges to MSS-SP44 unless otherwise specified.

3.23 Yoke material shall be same as bonnet material where maximum temperature specified is more than 427°C.

Copyright EIL – All rights reserved

4.0 OPERATION

4.1 Gear operation shall be provided as under:

Valve Type	Class	Size Requiring Gear-Operator
Gate Valve, Globe Valve & Diaphragm Valve	150 Class	12" and larger
	300 Class	12" and larger
	600 Class	10" and larger
	900 Class	6" and larger
	1500 Class	3" and larger
	2500 Class	3" and larger
Ball Valve / Plug Valve (Other than pressure balance plug valves)	150 Class	6" and larger
	300 Class	6" and larger
	600 Class	4" and larger
	900 Class	3" and larger
	1500 Class	3" and larger
Butterfly Valve	150, 300 Class	6" and larger

For sizes lower than these ranges, hand wheel / lever / wrench shall be provided. For pressure balance plug valves manufacturer's recommendation shall be acceptable provided the requirements specified in clause 4.6 are met.

4.2 Gear operator shall be provided, with position indicators for open / close positions and with limit stops. (Limit stops are not applicable for gate and globe valves).

4.3 Where gear operator is not called for as per Clause 4.1 but vendor recommends a gear operator, the same shall be highlighted.

4.4 Gear operator shall be so designed as to operate effectively with the differential pressure across the closed valve equal to the cold non-shock pressure rating.

4.5 Ball, plug and butterfly valves, shall have "Open" position indicators with limit stops.

4.6 Hand wheel diameter shall not exceed 750mm and lever length shall not exceed 500mm on either side. Effort to operate shall not exceed 35 Kg at handwheel periphery. However, failing to meet the above requirements, vendor shall offer gear operated valve and quote as per clause 4.3.

5.0 INSPECTION AND TESTING

5.1 Every valve shall be subjected to all the mandatory tests and checks called in the respective codes / data sheet by EIL inspection or any third party as approved by the purchaser. For IBR valves refer clause 7.0.

5.2 Every valve, its components and auxiliaries must be subjected to all the mandatory tests and checks called for in the respective codes, data sheets etc. by the manufacturer.

5.3 Though the extent of inspection shall be as under, exact extent with hold points shall be decided by EIL regional inspection office and recorded in the form of inspection plan. In case of third party inspection, the inspection plan shall be approved by the purchaser.

Copyright EIL – All rights reserved

Forged Valves:

1. Visual and dimensional inspection.
2. Review of material test certificates.
3. Any mandatory or supplementary test.
4. Hydrostatic test on 10% valves selected on random basis.
5. Strip check is required for 1% of total ordered quantity of Gate & Globe valves (min. 1 No.) for each Valve sheet no., however, strip check is not required for CS/ Brass/ Bronze material valves with 13% Cr/ Brass/ Bronze trims.

Cast Steel Valves:

1. Visual and dimensional inspection.
2. Review of material test certificates.
3. Review of radiographs/radiographic reports or any other NDT tests wherever applicable as per data sheet.
4. Any mandatory or supplementary test.
5. Hydrostatic test 100% for body, 10% other test.
6. Strip check is required for 1% of total ordered quantity of Gate & Globe valves (min. 1 No.) for each Valve sheet no., however, strip check is not required for CS/ Brass/ Bronze material valves with 13% Cr/ Brass/ Bronze trims.

   Samples for strip check shall be selected at random and shall generally be in the highest size in the lot.

5.4 In case of motor operated or actuator operated valves, functional / operational checks as per the requirements of the specifications shall be made on each valve.

6.0 RADIOGRAPHY OF CAST VALVES

6.1 Valve castings shall undergo radiographic examination as specified below.

Material	Rating	Size Range	Radiography
All	150#	24" and below	NIL**
		26" and above*	100%
	300#	16" and below	NIL**
		18" and above	100%
	600# & above	All sizes	100%

* No radiography is required for valves of size 26" and above in cooling water service.

**For sizes 24" & below in 150# and 16" & below in 300#, radiography percentage if specifically mentioned in individual valve material spec sheet shall govern.

Radiography specified as random 10% or 20% etc. in the respective valve data sheet implies 10% or 20% etc. of number of valves ordered against each item number with a minimum of one valve against each item.

Copyright EIL – All rights reserved

6.2 Radiography procedure, areas of casting to be radiographed shall be as per ASME B16.34 and acceptance criteria shall be as per ASME B16.34 Annexure-B. However for areas of casting to be radiographed for types of valves not covered in ASME B16.34, vendor shall radiograph castings in line with ASME B16.34.

6.3 For random radiography wherever specified in individual data sheets, the sampling shall be per size of the quantity ordered for each foundry.

6.4 Radiography wherever specified in the data sheets or as per clause 6.1 shall be done by X-ray / γ-ray to get the required sensitivity.

7.0 IBR CERTIFICATION

7.1 For valves described "IBR", valves shall be in accordance with the latest IBR (Indian Boiler Regulation) including the requirements specified in the specification.

7.2 For SW / BW end carbon steel valves under IBR, the chemical composition shall conform to the following:

Carbon (Max)	:	0.25%
Others (S, P, Mn)	:	As per IBR

7.3 Valves coming under the purview of "IBR"(Indian Boiler Regulations) shall each be individually accompanied by IBR certificate original in Form III-C duly approved by IBR authority / local authority empowered by the Central Boiler Board of India. Photocopy of original certificate duly attested by the local boiler inspector where the supplier is located is the minimum requirement for acceptance.

7.4 All "IBR" valves shall be painted red in body-bonnet / body-cover joint.

8.0 MARKING

8.1 Valve markings, symbols, abbreviations etc. shall be in accordance with MSS-SP-25 or the standard referred in specification sheet as applicable. Vendor's name, valve rating, material designation, nominal size, direction of flow (if any) etc. shall be integral on the body.

8.2 Each valve shall have a corrosion resistant tag giving size, valve tag / code no., securely attached to the valve body.

8.3 Paint or ink for marking shall not contain any harmful metal or metal salts such as zinc, lead or copper which cause corrosive attack on heating.

8.4 Carbon Steel / Alloy Steel valves shall be painted with one coat of inorganic zinc silicate (minimum DFT 65 to 75 microns).

9.0 DESPATCH

9.1 Valve shall be dry, clean and free from moisture, dirt and loose foreign materials of any kind.

9.2 Valves shall be protected from rust, corrosion and any mechanical damage during transportation, shipment and storage.

Copyright EIL – All rights reserved

9.3 Rust preventive on machined surfaces to be welded shall be easily removable with a petroleum solvent or shall not be harmful to welding.

9.4 Each end of valve shall be protected with the following materials:

Flange Face	:	Wood or Plastic Cover
Bevelled End	:	Wood or Plastic Cover
SW & SCRD. End	:	Plastic Cap

9.5 End protectors of wood / plastic to be used on flange faces shall be attached by at least three bolts and shall not be smaller than the outside diameter of the flange. However, plastic caps for SW & SCRD end valves shall be press fit type.

9.6 End protectors to be used on bevelled end shall be securely and tightly attached.

9.7 For special service valves additional requirement for despatch shall be as prescribed in data sheet.

10.0 ATTACHMENTS

6-44-0052-A1	:	Bypass Piping Arrangement
6-44-0052-A2	:	Specifications for Bypass Piping, Fittings and Valves
6-44-0052-A3	:	Special Requirements for Low Temperature and Cryogenic Valves
6-44-0052-A4	:	Special Requirements for Hydrogen Service Valves

11.0 REFERENCES

6-78-0001	:	Specification for Quality management system requirements from bidders
6-78-0003	:	Specification for documentation requirements from suppliers
6-81-0001	:	Specification for Positive Material Identification (PMI) at Supplier's Works
6-81-0004	:	Inspection and Test plan for Valves

Copyright EIL – All rights reserved

BYPASS PIPING ARRANGEMENT

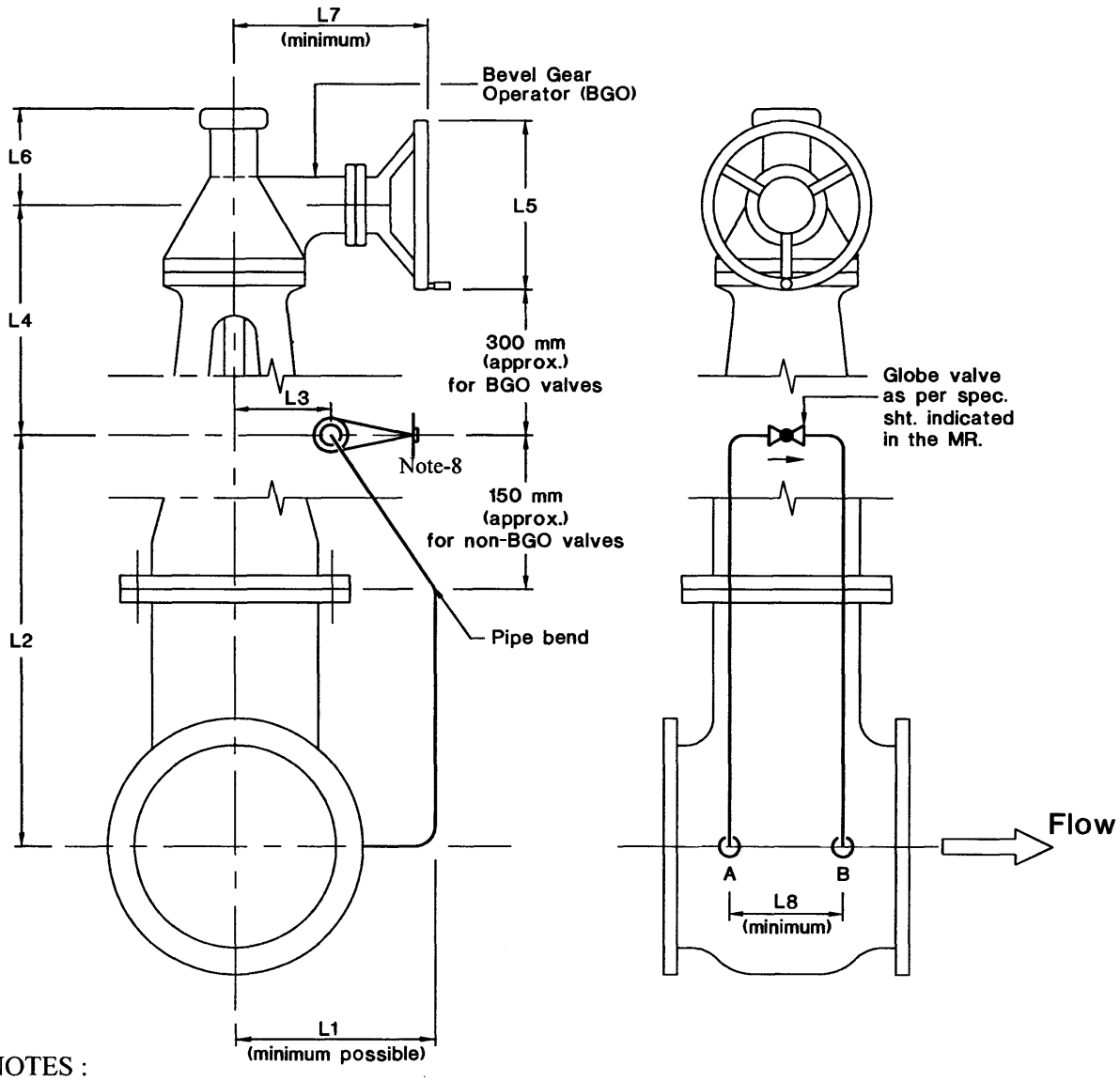

NOTES :

1. The orientation & location of handwheel of bevel gear operator & the bypass arrangement shall be strictly as per this sketch.

2. The bypass connection ends shall be socket welded upto 600# and butt welded for 900# and above rating.

3. The bypass arrangement shall be properly clamped to & supported by the body of the main valve.

4. Basic design of bypass shall be to MSS-SP-45.

5. Material of bypass pipe & 90° elbows shall be same or equivalent to the body material as indicated in Specification No. 6-44-0052-A2.

6. This sketch is applicable for both BGO & NON-BGO Valves.

7. Vendor shall furnish dimensions L1 to L8.

8. Stem shall not be horizontal in the case of CRYO Valves

Copyright EIL – All rights reserved

SPECIFICATIONS FOR BYPASS PIPING, FITTINGS AND VALVES

Class (Main Valve Sht.no.)	Pipe	Fittings	Bypass Valve Sht.no.
A1A(51301), A3A(51321), A9A(51301), A10A(51301), A11A(51301), A33A(51301), B1A(51401), B9A(51401), D1A(51501), D9A (51501)	ASTM A106 Gr.B (SMLS) 0.5"-0.75": S160 1.0"-1.5" : XS	ASTM A105 0.5"-0.75": SW 6000# 1.0"-1.5" : SW 3000#	52001
A6A(51301), B6A(51401)	ASTM A106 Gr.B (SMLS) 0.5"-0.5" : XXS 0.75"-1.5": S160	ASTM A105 0.5"-0.5" : SW 9000# 0.75"-1.5": SW 6000#	52001
A13A(51301), B13A(51401)	ASTM A106 Gr.B (SMLS) 0.5"-1.5" : XXS	ASTM A105 0.5"-1.5" : SW 9000#	52001
A2A(51302), B2A(51402), D2A (51502)	ASTM A106 Gr.B (SMLS)- IBR 0.5"-0.75": S160 1.0"-1.5" : XS	ASTM A105 - IBR 0.5"-0.75": SW 6000# 1.0"-1.5" : SW 3000#	52002
A4A (51303), B4A (51403), D4A (51503)	ASTM A333 Gr.6 (SMLS)- LT 0.5"-0.75": S160 1.0"-1.5" : XS	ASTM A350Gr.LF2-LT 0.5"-0.75": SW 6000# 1.0"-1.5" : SW 3000#	52003
A5A (51304), B5A (51404), D5A (51504)	ASTM A106 Gr.B (SMLS) -H2 0.5"-0.75": S160 1.0"-1.5": XS	ASTM A105 - H2 0.5"-0.75": SW 6000# 1.0"-1.5" : SW 3000#	52004
A7A (51307)	ASTM A106 Gr.B (SMLS) 0.5"-0.75" : S160 1.0"-1.5": XS	ASTM A105 0.5"-0.75": SW 6000# 1.0"-1.5" : SW 3000#	52007
A16A (51311), B16A (51411), D16A (51511)	ASTM A106 Gr.B (SMLS) - NACE 0.5"-0.5" : XXS 0.75"-1.5": S160	ASTM A105 - NACE 0.5"-0.5" : SW 9000# 0.75"-1.5": SW 6000#	52011
A19A (51313), B19A (51413), D19A (51513)	ASTM A106 Gr.B (SMLS) 0.5"-0.75" : S160 1.0"-1.5": XS	ASTM A105 0.5"-0.75": SW 6000# 1.0"-1.5" : SW 3000#	52013
E1A (51601), F1A (51701)	ASTM A106 Gr.B (SMLS) 0.5"-1.5" : S160	ASTM A234 Gr.WPB/ ASTM A105 0.5"-1.5" : BW, S160	52101
E2A (51602), F2A (51702)	ASTM A106 Gr.B (SMLS) - IBR 0.5"-1.5" : S160	ASTM A234 Gr.WPB/ ASTM A105 - IBR 0.5"-1.5" : BW, S160	52102
E5A (51604), F5A (51704)	ASTM A106 Gr.B (SMLS) - H2 0.5"-1.5" : S160	ASTM A234 Gr.WPB/ ASTM A105 - H2 0.5"-1.5" : BW, S160	52104
E9A (51605), F9A (51705)	ASTM A106 Gr.B (SMLS) 0.5"-1.5" : SCH XXS	ASTM A234 Gr.WPB/ ASTM A105 0.5"-1.5" : BW, SCH XXS	52105
E19A (51613), F19A (51713)	ASTM A106 Gr.B (SMLS) 0.5"-1.5" : SCH XXS	ASTM A234 Gr.WPB/ ASTM A105 0.5"-1.5" : BW, SCH XXS	52113

Copyright EIL – All rights reserved

Class (Main Valve Sht.no.)	Pipe	Fittings	Bypass Valve Sht.no.
A5Y (51384), A33Y (51384)	ASTM A106 Gr.B (SMLS) 0.5"-1.5" : S160	ASTM A105 0.5"-1.5" : SW 6000#	52085
A1D (51330), B1D (51430), D1D (51530)	ASTM A335Gr.P11(SMLS) 0.5"-0.75" : S160 1.0"-1.5": XS	ASTM A182 Gr.F11Cl.2 0.5"-0.75": SW 6000# 1.0"-1.5" : SW 3000#	52030
D2D (51531)	ASTM A335Gr.P11 (SMLS) - IBR 0.5"-0.75" : S160 1.0"-1.5": XS	ASTM A182 Gr.F11Cl.2 - IBR 0.5"-0.75": SW 6000# 1.0"-1.5" : SW 3000#	52031
B5D (51432), D5D (51532)	ASTM 335Gr.P11(SMLS)- H2 0.5"-0.75" : S160 1.0"-1.5": XS	ASTM A182 Gr.F11Cl.2 - H2 0.5"-0.75": SW 6000# 1.0"-1.5" : SW 3000#	52032
B1E (51433)	ASTM A335Gr.P22(SMLS) 0.5"-0.75" : S160 1.0"-1.5": XS	ASTM A182 Gr.F22Cl.3 0.5"-0.75": SW 6000# 1.0"-1.5" : SW 3000#	52033
D5E (51534)	ASTM A335Gr.P22(SMLS) - H2 0.5"-0.75" : S160 1.0"-1.5": XS	ASTM A182 Gr.F22Cl.3 - H2 0.5"-0.75": SW 6000# 1.0"-1.5" : SW 3000#	52034
A4F (51336), B4F (51436)	ASTM A335 Gr.P5(SMLS) 0.5"-0.75" : S160 1.0"-1.5": XS	ASTM A182 Gr.F5 0.5"-0.75": SW 6000# 1.0"-1.5" : SW 3000#	52036
B3F (51436)	ASTM A335 Gr.P5(SMLS) 0.5"-1.5" : XXS	ASTM A182 Gr.F5 0.5"-1.5" : SW 9000#	52036
A4G (51339), B4G (51439)	ASTM A335 Gr.P9(SMLS) 0.5"-0.75" : S160 1.0"-1.5": XS	ASTM A182 Gr.F9 0.5"-0.75": SW 6000# 1.0"-1.5" : SW 3000#	52039
F2D (51731)	ASTM A335 Gr.P11 (SMLS) - IBR 0.5"-1.5" : S160	ASTM A234Gr.WP11Cl.1/ A182 Gr.F11Cl.2 - IBR 0.5"-1.5" : BW, S160	52131
E5E (51634)	ASTM A335 Gr.P22(SMLS) - H2 0.5"-0.75" : S160 1.0"-1.5": XS	ASTM A234Gr.WP22Cl.1/ A182 Gr.F22Cl.3 - H2 0.5"-0.75" : BW, S160 1.0"-1.5" : BW, XS	52134
A1K (51345), A3K (51345), B1K (51445), D1K (51545)	ASTM A312 TP304(SMLS) 0.5"-0.75" : 80S 1.0"-1.5": 40S	ASTM A182 Gr.F304 0.5"-1.5" : SW 3000#	52045
A2K (51346), B2K (51446), D2K (51546)	ASTM A312 TP304(SMLS) - CRYO 0.5"-0.75" : 80S 1.0"-1.5": 40S	ASTM A182 Gr.F304 - CRYO 0.5"-1.5" : SW 3000#	52046
B4K (51448), B5K (51448)	ASTM A312 TP304H (SMLS) 0.5"-1.5" : 80S	ASTM A182 Gr.F304H 0.5"-1.5": SW 3000#	52048

Copyright EIL – All rights reserved

Class (Main Valve Sht.no.)	Pipe	Fittings	Bypass Valve Sht.no.
A6K (51350), B6K (51450)	ASTM A312 TP304L (SMLS) 0.5"-0.75" : 80S 1.0"-1.5": 40S	ASTM A182 Gr.F304L 0.5"-1.5": SW 3000#	52050
A1M (51361), B1M (51461)	ASTM A312 TP316(SMLS) 0.5"-0.75" : 80S 1.0"-1.5": 40S	ASTM A182 Gr.F316 0.5"-1.5": SW 3000#	52061
B5M (51462)	ASTM A312 TP316H (SMLS) - H2 0.5"-0.75" : 80S 1.0"-1.5": 40S	ASTM A182 Gr.F316H - H2 0.5"-1.5": SW 3000#	52062
B3M (51463)	ASTM A312 TP321(SMLS) 0.5"-0.75" : 80S 1.0"-1.5": 40S	ASTM A182 Gr.F321 0.5"-1.5": SW 3000#	52063
A1N (51366), B1N (51466)	ASTM A312 TP 316L (SMLS) 0.5"-0.75" : 80S 1.0"-1.5": 40S	ASTM A182 Gr.F316L 0.5"-1.5": SW 3000#	52066
B6N (51471)	ASTM A312 TP316L (SMLS) 0.5"-0.75" : 80S 1.0"-1.5": 40S	ASTM A182 Gr.F316L 0.5"0.5"-1.5": SW 3000#	52071

Copyright EIL – All rights reserved

SPECIAL REQUIREMENTS FOR LOW TEMPERATURE & CRYOGENIC VALVES

1.0 SCOPE

All valves of Low Temperature Carbon Steel (LTCS) and all grades of austenitic SS (CRYO) material are categorized as cryogenic valves. All these valves shall have extended bonnet as per BS 6364 except check valves.

Following qualification criteria shall be met by the valve vendors to quote valves for cryogenic services:

2.0 QUALIFICATION CRITERIA

i) Both cryogenic test (clause 2.1) and reference list (clause 2.2) together shall be considered for vendor qualification and vendor shall furnish the same, along with his offer.

ii) Vendors who do not have cryogenic test reports and reference list covering valves of all sizes, materials and ratings required by MR, should confirm / furnish the following for consideration of their offer:

a. Evidence of having conducted successfully at least one cryogenic test as per BS 6364. Test certificate shall be furnished with the offer.

b. Vendor shall confirm to conduct cryogenic test per clauses 2.1 & 2.3 for the remaining valves not later than 12 weeks from the date of purchase order.

c. Vendor shall also furnish reference list for valves supplied for non-cryo service if reference list referred in 2.2.1 does not cover all the sizes of MR.

Offers of vendors who do not comply with above requirements would be rejected.

2.1 Cryogenic Test

Vendors to furnish copies of cryogenic test certificate for tests conducted as per details given below:

2.1.1 Test shall be as per BS 6364.

2.1.2 Test temperature, unless specifically called for otherwise in the individual MR, shall be -45°C for LTCS and -196°C for all grades of austenitic stainless steel.

2.1.3. Tests carried out on a particular size of one type of valve, pressure rating and material shall qualify all sizes equal to and below the test valve size for the same type, pressure rating and material. In case of austenitic SS any one grade would qualify for all other grades of austenitic SS.

2.1.4. Tests should have been witnessed and certified by any one of the following third party inspection agencies; M/s Lloyd, BV, DNV, TUV or EIL/ CEIL.

2.1.5. Cryogenic test need not be conducted for every order. Test conducted previously and witnessed by inspection agencies listed above shall be considered acceptable and need not be repeated.

Copyright EIL – All rights reserved

2.2 Reference List

Vendor shall furnish reference list for valves supplied for cryogenic service indicating the name of client, year of supply, size, material, pressure rating, type of valve and quantity.

2.3 Post Order Testing Procedure

2.3.1. Before conducting post order testing, vendor shall submit the following for approval:

a. Test procedure (as per BS 6364).
b. Cross-section drawing of the valve with material of construction.
c. Schematic of test rig (as per BS 6364) with complete details.

2.3.2. Test has to be conducted irrespective of the service on largest size for each type of valve and for each material and class rating. Vendor shall offer one, two or three valves for selection of test valve by inspector depending upon whether quantity of largest valve in the order is one, two or three and more than three respectively.

In the event of failure of the test valve to meet the specification requirements, the vendor shall conduct test on two more valves. These two valves which pass test successfully, are of lower size, then the qualification will be valid only to sizes upto which test has been conducted successfully.

2.3.3. In case of non-conductance of cryogenic test(s) within 12 weeks or failure in the test(s) conducted after receipt of order, the owner reserves the right to invoke any of the provisions of the purchase order including cancellation of the purchase order at the risk and cost of vendor.

3.0 Bonnet extension, wherever specified in the valve sheet to BS 6364 shall be for "non cold box application" unless otherwise specified in the MR. Even if not called for in valve sheet, valves indicated as "LT" or "CRYO" shall be supplied with bonnet extension.

4.0 Bonnet and Gland extension joints shall be of butt welded/integrally cast construction.

5.0 Repair welding procedure for austenitic stainless steel valves in "CRYO" service shall have to be qualified for impact test as per ASME B31.3. Minimum acceptable impact energy shall be 20 J or lateral expansion of 0.38 mm at temperature of -196°C.

6.0 Wherever impact test of SS studs / nuts is called for in the data sheet, the impact value shall be 27 J at the intended service temperature specified in the data sheets.

Copyright EIL – All rights reserved

SPECIAL REQUIREMENTS FOR HYDROGEN SERVICE

1.0 GENERAL

1.1 These requirements are applicable for valves used in Hydrogen service. These are in addition to the requirements described in "Technical Notes for Valves" Spec. No. 6-44-0052, and shall be read in conjunction with this specification.

1.2 All cast valve flanges & bodies with flange rating of Class 900 or greater shall be examined in accordance with paragraphs 7.2 through 7.5 of Appendix-VII of ASME SEC-VIII, DIV.1, regardless of casting quality factor.

1.3 Body / bonnet / cover joints & stuffing box of all valves shall have low emission. One valve per metallurgy, per rating, per size shall be helium leak tested as per ASME Sec.V, Subsection A, Article 10 (Detector Probe Technique), Appendix IV at a minimum of 25% of the allowable (rated) cold working pressure. Selection of valves for helium leak test shall be at random. Test duration shall be as follows:

Test Duration in Minutes					
Nominal Size	Pressure Class				
	Upto 300	600	800 & 900	1500	2500
Upto 2"	3	6	9	12	12
3" to 6"	6	9	12	15	18
8" to 16"	9	9	12	15	18
18" to 24"	9	12	15	18	21

The valve shall show no leakage. No leakage is defined as a total leakage rate of less than 0.0001 ml/s of helium.

2.0 Only normalized and tempered material shall be used in the following specifications:

Castings : A217 Gr.WC1, A217 Gr.WC4, A217 Gr.WC5, A217 Gr.WC6, A217 Gr.WC9, A217 Gr.C5, A217 Gr.C12

Forgings : A182 Gr.F11 Cl.2

3.0 CS & AS VALVES

3.1 Bend test and Magnetic Particle inspection of the entire surface of body and bonnet casting shall be in accordance with ASTM A217. Supplementary requirement S3 & S4 evaluation of magnetic particle, inspection shall be in accordance with MSS-SP-53 except that no linear discontinuities shall be allowed.

3.2 The Brinell hardness of heat treated casting shall not exceed 200 BHN for carbon steel & 225 for alloy steel.

3.3 Repair to defective casting shall be outlined in writing to the purchaser before repair starts. Repair method to be approved prior to welding.

3.4 Casting shall be preheated to a minimum of 400°F prior to welding and all Chromium-Molybdenum alloys shall be postweld heat treated after welding is complete. Stress relieving is essential for welds.

Copyright EIL – All rights reserved

3.5 Carbon steel shall be normalised and alloy steels shall be normalised & tempered.

3.6 Dye Penetrant test of welds shall be in accordance with ASTM B165 Procedure B-2. Interpretation as per Appendix-8 of ASME-VIII Div.1.

3.7 The tensile stress for AS shall be less than 100,000 psi.

3.8 Charpy V-notch impact testing is to be done for valve material (average 20 ft-lb for set of 3 [minimum value 15 ft-lb] at 30°F).

3.9 For radiography and acceptance criteria for valve castings, refer Cl. 4.2.

4.0 SS VALVES

4.1 Valve casting shall be in solution heat treated and pickled condition.

4.2 Critical body and bonnet casing section typically defined by ASME B16.34 shall be radiographed and shall meet ASTM E446 (upto 2" thick) Category A, B & CA Level 2, Category CB, OC & CD Level 3, Category D, B & F Level 0. For wall thickness 2" to 4.5" comparable plates of ASTM E186 shall be used. ASTM E94 and ASTM E142 shall be used for recommended practice & controlling quality of radiography as guide. The entire surface of all castings shall be dye-penetrant inspected after pickling.

4.3 Welds shall be 100% radiographed and evaluated in accordance with paragraph 344.5 of ASME B31.3 with a minimum casting quality factor of 0.95. Dye Penetration test shall be as per ASTM E165 Procedure B-2, Interpretation as per Appendix-8 of ASME-VIII Div.1.

Copyright EIL – All rights reserved

Annexure-4-3

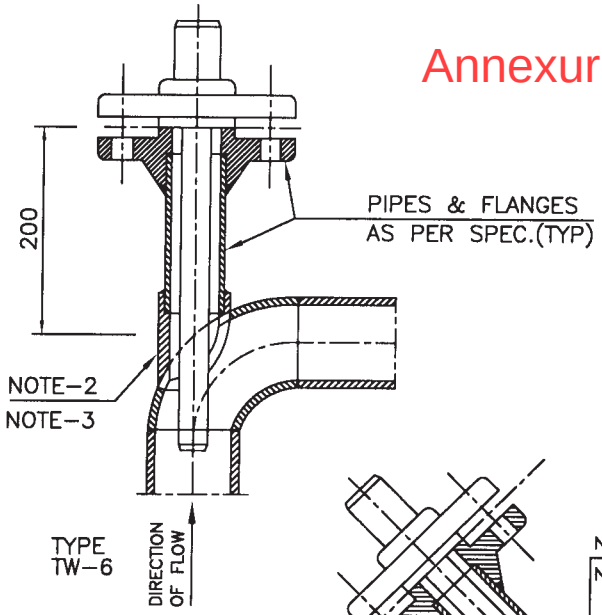

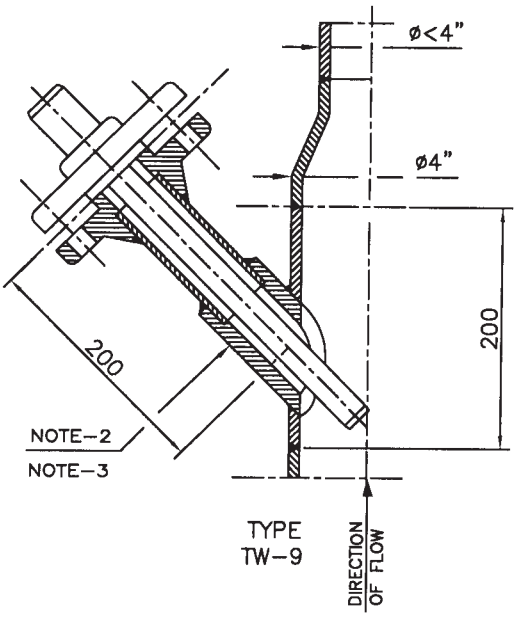

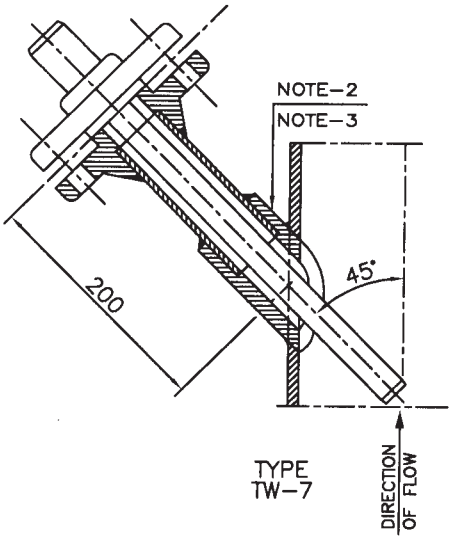

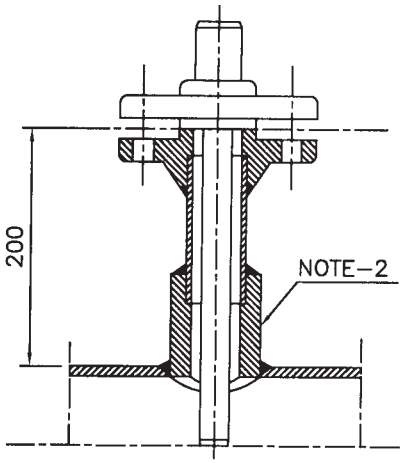

TYPE
TW–8

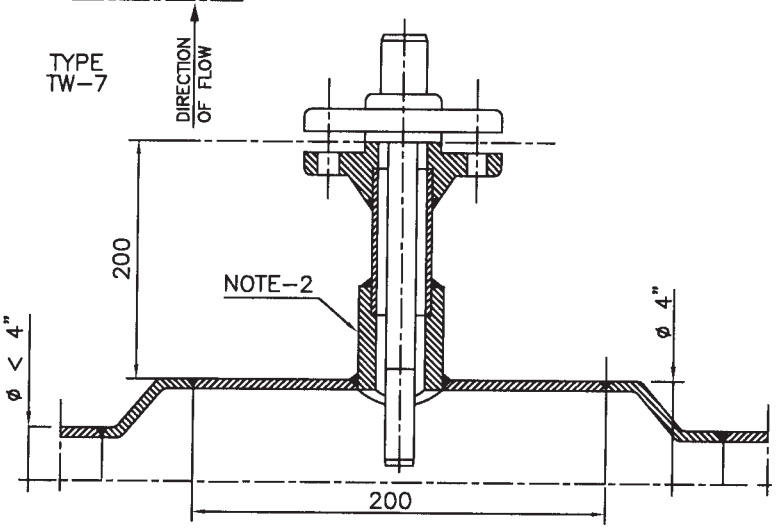

TYPE
TW–10

LINE DIA.	MINIMUM CLEARANCE FOR REMOVAL
4"	630
6"	630
8"	670
10"	670
12"	670
14"	670
16"	670
18"	670
20" AND LARGER	750
VESSELS	750

NOTES:–

1 BOLTS, NUTS AND GASKETS BY PIPING.
2 BRANCH FITTING SHALL BE AS PER PMS
3 IF BRANCH FITTING IS A COUPLING, IT SHALL BE OF SPECIAL LENGTH.

TYPE TW–6 : ELBOW MIN. 4" DIA. OR LARGER
TYPE TW–7 : VERTICAL LINE 4" DIA. OR LARGER
TYPE TW–8 : HORIZONTAL LINE 4" DIA. OR LARGER
TYPE TW–9 : VERTICAL LINE DIA. LESS THAN 4"
TYPE TW–10: HORIZONTAL LINE DIA. LESS THAN 4"

Rev. No.	Date	Purpose	Prepared by	Checked by	Stds. Committee Convenor	Stds. Bureau Chairman
4	21.10.14	REVISED & ISSUED AS STANDARD	SH	AK	RN /ATD	SC
3	29.06.09	REAFFIRMED & ISSUED AS STANDARD	PK	RN	SC	ND

Approved by

Copyright EIL - All rights reserved

1	**GENERAL**						
2	Project: **RAJASTHAN REFINERY PROJECT**			Job No: **B224**			
3	Owner: **M/s HRRL**			Site: **BARMER, RAJASTHAN**			
4	Purchaser:			Unit : Unit No.:			
5	Item No.:			No. of Units:			
6	Applicable to: ■ Proposal ☐ Purchase			☐ As Built			
7	■ : Scope, Option & Info specified by Purchaser. ☐ : Info required from and options left to vendor. Vendor to cross (☒) the selected						
8	Gas Seal Module for:			Compressor Item No.:			
9	Gas Seal Module Supplier:			Gas Seal Module Manufacturer:			
10	Gas Seal : Mfr.:			Model No.:		Suppl. By:	
11	■ Separate Modules for each unit/ casing			☐ Multiple Package for			
12	**Dry Gas Seal Details:**						
13	■ Dry Gas Seal Type	☐ Single (4A-4)	☐ Double (4A-1)	☐ Tandem (4A-3)	☐ Tandem with internal labyrinth (4A-2)		
14	■ Seal Gas Hazardous :	■ Yes	☐ No	■ For Seal Gas Composition, refer to: **(Remark-3)**			
15	☐ Unidirectional ■ Bidirectional	☐ Rot. Speed,max.,rpm:		☐ Dir. of Rotn. comptble with	☐ Yes	☐ No	
16	☐ Max. Sealing Pr., kg/cm²g :		☐ Seal Max. Design Pr., kg/cm²g : **(Rem.-4)**		☐ Settleout Pr., kg/cm²g:		
17	☐ Eqpt.Suc. Pr.(max/min) kg/cm²g :		☐ Eqpt. Discharge Temp. °C :		☐ R.V. Set Pr., kg/cm²g :		
18	**Vents**			**Leakage : Normal / Static**	**Connected to :**		
19	Primary Vent			/	■ Flare	☐ Safe	
20	Secondary Vent			/	☐ Flare	■ Safe	
21	Secondary Vent for Internal Labyrinth			/	☐ Flare	☐ Safe	
22	**Gas Supply: Refer Job spec.**			**Filters :**			
23		Primary/Buffer Gas	Secondary/Barrier	Separation Gas		Primary/Buffer Gas	Sec,/Barrier Seal	Separation Gas
24	Type of Gas	**Refer Job Spec.**	**Nitrogen**	**Nitrogen**	Twin Filters	**Yes**	**Yes**	**Yes**
25	Pressure. kg/cm²g				Filt.Level-nom. :m			
26	Temp. °C				Manufaturer			
27	Flow, NM³/hr				Model			
28	**Modules:**				Design Pr., kg/cm²g			
29	Basic Modules:				Test Pr., kg/cm²g			
30	■ Seal Gas Filter Module (Fig. No. 4A-5a)				Code Constr./Stamp	/	/	/
31	■ Separation Gas Filter Module (Fig. No. 4A-5c)				Matl. Case/ Top	**SS/ SS**	**SS/ SS**	**SS/ SS**
32	☐ Differential Pressure Control (Fig. No.)				Spare Cartridges			
33	☐ Flow Control (Fig. No.)				**Continuous Flow Transfer Valves :** ■ Yes ☐ No			
34	Outlet Modules:					Primary/Buffer Gas	Sec,/Barrier Seal	Separation Gas
35	☐ Flow Monitoring - Diff. Pressure (Fig. No.)				Tight Shut off reqd.	**Yes**	**Yes**	
36	☐ Flow Monitoring – Back Pressure (Fig. No.)				Manufacturer			
37	☐ Flow Measuring (Fig. No.)				Model			
38	Separation Gas Modules: ■ 4A-9a ☐ 4A-9b ☐ 4A-9c				Rating, kg/cm²g			
39	For Double opposed dry gas seal type:				Matl: Body	**CS**	**CS**	
40	☐ Differential Pressure Control (Fig. No. 4A-6a)				Matl: Plug **or** Ball	**SS**	**SS**	
41	☐ Flow Control (Fig. No.)				Matl: Trim	**SS**	**SS**	
42	☐ Material :	☐ Double Blocks & Bleeds						
43	☐ Instrument Test Valves Required			**Piping and Tubing :**			
44	☐ Special Requirements			☐ Tight Shut off Reqd.	☐ C.S. slip on flanges		
45				☐ Through Studs Reqd.	☐ SS Slip-on/Socket Weld/Weldneck Flng		
46				■ Heat Tracing reqd.	☐ By Purchaser	■ By Vendor	
47	**Shop Inspection and Tests : (Remark- 2)**						
48				**Witness**	**Observed**		
49	■ Cleanliness			■	☐		
50	■ Check Controls			■	☐		
51	■ Changeover Filters			■	☐		
52	■ Sound level			■	☐		
53	■ Hydrotest Assembled System			■	☐		
54	☐ Use for Complete Unit System Test			☐	☐		
55	■ Material test Certificates			☐	■		
56	■ Certified Copies of all Test Logs and Data			☐	■		
57	**APPLICABLE CODES:** API 617 & API 614,						
58	**REMARKS:** 1) Unless otherwise specified, type of dry gas seal shall be dual tandem with int. labyrinth for each compressor casing.						
59	2) Also refer Job Specification & Aneexure-1D of API 617 for typical Dry Gas Seal Testing Considerations.						
60	3) Refer PDS, Job Specification and Site & Utility Data for seal gases during normal and transient cases.						
61	4) The dry gas seal and seal gas system shall be designed for the supply / return / mechanical design conditions of the proposed seal gases OR casing MAWP, whichever is greater.						
62	5) Dry gas seals shall be bi-directional and interchangeable between Drive end & Non Drive end side of respective compressor casing.						
63	6) This is a typical datasheet. Vendor to furnish duly filled in datasheet for each casing of each compressor package during detail engg.						

Copyrights EIL – All rights reserved

Annexure-4-5

SPECIAL REQUIREMENTS FOR HYDROGEN SERVICE FOR PIPING MATERIALS

PROJECT : RAJASTHAN REFINERY

OWNER : HPCL RAJASTHAN REFINERY LIMITED

JOB NO. : B224

LOCATION : PACHPADRA ,RAJASTHAN

Rev. No	Date	Purpose	Prepared by	Checked by	Approved by
A	29.03.2019	ISSUED AS JOB SPECIFICATION	MKS	PPSW	MK

Copyright EIL – All rights reserved

SPECIAL REQUIREMENTS FOR HYDROGEN SERVICE

1.0 GENERAL

These requirements are applicable in addition to the requirements specified in the Piping Material Specifications.

2.0 PIPES, FLANGES AND FITTINGS

2.1 Method of Manufacture

All carbon steel pipes, fittings and flanges having wall thickness 9.53 mm and above shall be normalised. Cold drawn pipes and fittings shall be normalised after the final cold draw pass for all thicknesses. In addition, fittings made from forgings shall have Carbon - 0.35% max. and Silicon - 0.35% max. The normalising heat treatment shall be a separate heating operation and not a part of the hot forming operation.

All alloy steel (Cr-Mo) pipes, forgings and fittings shall be normalised and tempered. The normalising and tempering shall be a separate heating operation and not a part of the hot forming operation. The maximum room temperature tensile strength shall be 100,000 psi.

2.2 Impact Test

For all carbon steels and alloy steels pipes, flanges and fittings with thickness over 20 mm, Charpy-V Notch impact testing shall be carried out in accordance with paragraph UG-84 of ASME Section VIII, Div-1 for weld metal and base metal from the thickest item per heat of material and per heat treating batch. Impact test specimen shall be in complete heat treated condition and in accordance with ASTM A370. Impact energies at 0 C shall average greater than 27J (20 ft-lb) per set of 3 specimens, with a minimum of 19J (15 ft-lb).

If welding is used in manufacture, impact test of Heat Affected Zone (HAZ) and weld metal shall also be carried out.

2.3 Hardness

For carbon steel pipes and fittings, hardness of weld and HAZ shall be limited to 200 BHN (max.).
For alloy steel pipes and fittings, hardness of weld and HAZ shall be limited to 225 BHN (max.).

3.0 VALVES

3.1 All valve castings shall be of radiographic quality.

3.2 All cast valve flanges & bodies with flange rating of Class 900 or greater shall be examined in accordance with paragraphs 7.2 through 7.5 of Appendix-VII of ASME SEC-VIII, DIV.1, regardless of casting quality factor.

Copyright EIL – All rights reserved

3.3 Only Normalized and Tempered material shall be used in the following specifications:

Castings: A217 Gr.WC1, A217 Gr.WC4, A217 Gr.WC5, A217 Gr.WC6, A217 Gr.WC9, A217 Gr.C5, A217 Gr.C12

Forgings: A182 Gr.F11 Cl.2

3.4 Body / bonnet / cover joints & stuffing box of valves shall have low emission. One valve per metallurgy, per rating, per size shall be helium leak tested as per ASME Sec.V, Subsection A, Article 10 (Detector Probe Technique), Appendix IV at a minimum of 25% of the allowable (rated) cold working pressure. Selection of valves for helium leak test shall be at random. Test duration shall be as follows:

Test Duration in Minutes					
Nominal Size	Pressure Class				
	Upto 300	600	800 & 900	1500	2500
Upto 2"	3	6	9	12	12
3" to 6"	6	9	12	15	18
8" to 16"	9	9	12	15	18
18" to 24"	9	12	15	18	21

The valve shall show no leakage. No leakage is defined as a total leakage rate of less than 0.0001 ml/s of helium.

3.5 CS & AS Valves :

Bend test and Magnetic Particle inspection of the entire surface of body and bonnet casting shall be in accordance with ASTM A217. Supplementary requirement S3 & S4 evaluation of magnetic particle, inspection shall be in accordance with MSS-SP-53 except that no linear discontinuities shall be allowed.

The Brinell hardness of heat treated casting shall not exceed 200 BHN for carbon steel & 225 for alloy steel.

Repair of defective casting shall be outlined in writing to the purchaser before repair starts. Repair method to be approved prior to welding.

Casting shall be preheated to a minimum of 400ºF prior to welding and all Chromium-Molybdenum alloys shall be postweld heat treated after welding is complete. Stress relieving is essential for welds.

Carbon steel shall be normalised and alloy steels shall be normalised & tempered.

Dye Penetrant test of welds shall be in accordance with ASTM B165 Procedure B-2. Interpretation as per Appendix-8 of ASME-VIII Div.1.

The tensile stress for AS shall be less than 100,000 psi.

Charpy V-notch impact testing is to be done for valve material (average 20 ft-lb for set of 3 [minimum value 15 ft-lb] at 30 F).

For radiography and acceptance criteria for valve castings, refer para 2 of clause3.6.

Copyright EIL – All rights reserved

3.6 SS Valves :

Casting and test bar shall be heat treated together. Valve casting shall be in solution heat treated and pickled condition.

Critical body and bonnet casing section typically defined by ASME B16.34 shall be radiographed and shall meet ASTM E446 (upto 2" thick) Category A,B & CA Level 2, Category CB, OC & CD Level 3, Category D,B & F Level 0. For wall thickness 2" to 4.5" comparable plates of ASTM E186 shall be used. ASTM E94 and ASTM E142 shall be used for recommended practice & controlling quality of radiography as guide.The entire surface of all castings shall be dye-penetrant inspected after pickling.

Repair welds shall be 100% radiographed and evaluated in accordance with paragraph 344.5 of ASME B31.3 with a minimum casting quality factor of 0.95. Dye Penetration test shall be as per ASTM E165 Procedure B-2, Interpretation as per Appendix-8 of ASME-VIII Div.1.

Copyright EIL – All rights reserved

Annexure-4-7

वेरिएबल एरिया फ्लोमीटरों के लिए निरीक्षण व परीक्षण योजना

INSPECTION AND TEST PLAN FOR VARIABLE AREA FLOW METERS

Rev. No.	Date	Purpose	Prepared By	Checked by	Standards Committee Convenor	Standards Bureau Chairman
					Approved by	
3	20.09.2013	Revised and Reissued	MJ	RS	SCG	DM
2	22.02.2012	Revised and Reissued	MJ	GS	AKC	DM
1	22.01.2008	Revised and Reissued	AKG	PPM	MVKK	VC
0	30.04.2002	Issued for implementation	RG	AKC	AK	GRR

Copyright EIL – All rights reserved

Abbreviations

AS	:	Alloy Steel	MRT	:	Mechanical Run Test
BASEEFA	:	British Approval Service for Electrical Equipment in Flammable Atmospheres	MPT/MT	:	Magnetic Particle Testing
			MTC	:	Material Test Certificates
BIS	:	Bureau of Indian Standards	MOC	:	Material of Construction
CCE or CCOE	:	Chief Controller of Explosives	NPSH	:	Net Positive Suction Head
CEIL	:	Certification Engineers International Limited	NDT	:	Non Destructive Testing
CIMFR	:	Central Institute of Mining & Fuel Research	NEMA	:	National Electrical Manufacturers Association
CE	:	Carbon Equivalent	PO	:	Purchase Order
DFT	:	Dry Film Thickness	PESO	:	Petroleum Explosive Safety Organization
DT	:	Destructive Testing	PQR	:	Procedure Qualification Record
DP or DPT	:	Dye Penetrate Testing	PR	:	Purchase Requisition
ERTL	:	Electronics Regional Test Laboratory	PMI	:	Positive Material Identification
FCRI	:	Fluid Control Research Institute	PTB	:	Physikalisch-Technische Bundesanstalt
FM	:	Factory Mutual	QC	:	Quality Control
FLP	:	Flame Proof	RT	:	Radiography Testing
HART	:	Highway Addressable Remote Transducer	SS	:	Stainless Steel
HV	:	High Voltage	TC	:	Test Certificate
ITP	:	Inspection and Test Plan	TPI or TPIA	:	Third Party Inspection Agency
IP	:	Ingress Protection	UT	:	Ultrasonic Testing
IC	:	Inspection Certification	UL	:	Under writer Laboratories
IR	:	Insulation Resistance	VDR	:	Vendor Data Requirement
IEC	:	International Electro technical Commission	WPS	:	Welding Procedure Specification
JEC	:	Japanese Electro technical Committee	WPQ	:	Welders Performance Qualification
LPT	:	Liquid Penetrate Testing	XLPE	:	Cross Linked Poly Ethylene

Inspection Standards Committee

Convenor : Mr. S C Gupta

Members:

Mr. R.K. Singh
Mr.Neeraj Mathur
Mr. Mayank Jain
Mr. Rajeev Kumar
Mr. T Kamalakannan
Mr. Himangshu Pal
Mr. Deepak Gupta (Project)

Copyright EIL – All rights reserved

1.0 SCOPE

This Inspection and Test Plan covers the minimum inspection and testing requirements for Variable Area Flow Meters.

2.0 REFERENCE DOCUMENTS

PO/PR / Standards referred there in /Job specifications / Approved documents.

3.0 INSPECTION AND TEST REQUIREMENTS

SL NO.	STAGE/ ACTIVITY	CHARACTERISTICS	QUANTUM OF CHECK	RECORD	SCOPE OF INSPECTION		
					SUB SUPPLIER	SUPPLIER	EIL/TPIA
1.0	**Procedures**	--	--	--	--	--	--
1.1	WPS/PQR/WPQ	Welding procedure Qualification for welds as applicable	100%	WPS PQR WPQ	--	H	W (New) R (Existing)
2.0	**Material Inspection**						
2.1	Incoming Material like Metal tube, Spool Pipes, Flanges, Float Assembly, Float stoppers, etc.	Chemical & Mechanical Properties, HT	100%	Material Test Certificates / Test Lab Certificates	H	H	R
3.0	**In process Inspection**						
3.1	Machining of components and assembly	Visual, Dimensions.	100%	Supplier's Test Records	-	H	-
4.0	**Final Inspection**						

Copyright EIL – All rights reserved

SL NO.	STAGE/ ACTIVITY	CHARACTERISTICS	QUANTUM OF CHECK	RECORD	SCOPE OF INSPECTION		
					SUB SUPPLIER	SUPPLIER	EIL/TPIA
4.1	NDT , Post Weld Heat Treatment (PWHT) (If specified)	• Radiography for weld joints • Dye Penetration test. • Post Weld Heat Treatment of welds,	100%	NDT reports / PWHT chart	-	H	R
4.2	Final Inspection	• Visual and dimensional check • Hydrostatic test of complete flow meter assembly • Calibration test including accuracy and repeatability • Functional check with Transmitter & flow switches(if required)	100% by supplier and on random basis by EIL/TPIA	Supplier's Test Records and Inspection Witness Record	-	H	R
4.3	Submission of certificates / Documents	• Certificate from testing agency like BASSEFA, FM, PTB, CIMFR, etc. for transmitter/switch enclosure for use in specified hazardous area. • BIS approval for transmitter enclosure manufactured indigenously. • Statutory approval certificate for transmitter/switch enclosure from CCOE / PESO for use in specified hazardous area. • Degree of protection (IP) certificate for transmitter/switch enclosure.	Prototype for each model	Statutory Approval Certificates / Type Test Certificates	-	H	R

Copyright EIL – All rights reserved

SL NO.	STAGE/ ACTIVITY	CHARACTERISTICS	QUANTUM OF CHECK	RECORD	SCOPE OF INSPECTION		
					SUB SUPPLIER	SUPPLIER	EIL/TPIA
5.0	**Painting**						
5.1	Painting	• Special cleaning and packing for oxygen and chlorine services • Pre treatment, primer and final paint, shade, thickness.	100%	Test Records	-	H	-
6.0	**Documentation and IC**						
6.1	Documentation and IC	• Review of Internal Test Reports • Manufacturer TC for bought out components. • IC issuance.	100%	Supplier's Test Records / Inspection Certificate	-	H	H
6.2	Final Document submission	Compilation of Inspection reports ,drawings, etc as per VDR / PR	100%	Final data folder /Completeness certificate	-	H	H

Legends: H- Hold (Do not proceed without approval), R-Review, RW-Random witness (As specified or 10 % - Samples must include min 1 No of each type), W- Witness (Give due notice, work may proceed after scheduled date).

NOTES :-

1. This document describes the generic test requirements. Any additional test or inspection scope if specified in contract documents shall also be applicable. (Unless otherwise agreed upon).
2. Acceptance Norms for all the activities shall be as per PO/PR/ Standards referred there in/ Job specifications /Approved documents

Copyright EIL – All rights reserved

लैवल ईन्स्ट्रुमेंटों के लिए निरीक्षण व परीक्षण योजना

INSPECTION AND TEST PLAN FOR LEVEL INSTRUMENTS

Rev. No.	Date	Purpose	Prepared by	Checked by	Standards Committee Convenor	Standards Bureau Chairman
					Approved by	
3	20.09.13	Revised and Re-issued	MJ	RS	SCG	DM
2	22.03.12	Revised and Re-issued	MJ	GS	AKC	DM
1	02.01.08	Revised and Re-issued	SA	CRM	MVKK	VC
0	29.11.02	Issued for implementation	RG	AKC	AKB	GRR

Copyright EIL – All rights reserved

Abbreviations

AS	:	Alloy Steel
BASEEFA	:	British Approval Service for Electrical Equipment in Flammable Atmospheres
BIS	:	Bureau of Indian Standards
CCE or CCOE	:	Chief Controller of Explosives
CEIL	:	Certification Engineers International Limited
CIMFR	:	Central Institute of Mining & Fuel Research
CE	:	Carbon Equivalent
DFT	:	Dry Film Thickness
DT	:	Destructive Testing
DP or DPT	:	Dye Penetrate Testing
ERTL	:	Electronics Regional Test Laboratory
FCRI	:	Fluid Control Research Institute
FM	:	Factory Mutual
FLP	:	Flame Proof
HART	:	Highway Addressable Remote Transducer
HV	:	High Voltage
ITP	:	Inspection and Test Plan
IP	:	Ingress Protection
IC	:	Inspection Certification
IR	:	Insulation Resistance
IEC	:	International Electro technical Commission
JEC	:	Japanese Electro technical Committee
LPT	:	Liquid Penetrate Testing
MRT	:	Mechanical Run Test
MPT/MT	:	Magnetic Particle Testing
MTC	:	Material Test Certificates
MOC	:	Material of Construction
NPSH	:	Net Positive Suction Head
NDT	:	Non Destructive Testing
NEMA	:	National Electrical Manufacturers Association
PO	:	Purchase Order
PESO	:	Petroleum Explosive Safety Organization
PQR	:	Procedure Qualification Record
PR	:	Purchase Requisition
PMI	:	Positive Material Identification
PTB	:	Physikalisch-Technische Bundesanstalt
QC	:	Quality Control
RT	:	Radiography Testing
SS	:	Stainless Steel
TC	:	Test Certificate
TPI or TPIA	:	Third Party Inspection Agency
UT	:	Ultrasonic Testing
UL	:	Under writer Laboratories
VDR	:	Vendor Data Requirement
WPS	:	Welding Procedure Specification
WPQ	:	Welders Performance Qualification
XLPE	:	Cross Linked Poly Ethylene

Inspection Standards Committee

Convenor : Mr. S C Gupta

Members:

Mr. R.K. Singh
Mr.Neeraj Mathur
Mr. Mayank Jain
Mr. Rajeev Kumar
Mr. T Kamalakannan
Mr. Himangshu Pal
Mr. Deepak Gupta (Project)

Copyright EIL – All rights reserved

1.0 SCOPE

This Inspection and Test Plan covers the minimum inspection and testing requirements for Float / Displacer Operated Level Instruments.

2.0 REFERENCE DOCUMENTS

PO/PR / Standards referred there in /Job specifications / Approved documents.

3.0 INSPECTION AND TEST REQUIREMENTS

SL NO.	STAGE/ ACTIVITY	CHARACTERISTICS	QUANTUM OF CHECK	RECORD	SCOPE OF INSPECTION		
					SUB SUPPLIER	SUPPLIER	EIL/TPIA
1.0	**Procedures**	--	--	--	--	--	--
1.1	WPS/PQR/WPQ	Welding procedure Qualification for welds as applicable	100%	WPS PQR WPQ	--	H	W (New) R (Existing)
2.0	**Material Inspection**						
2.1	Incoming Material like Cage Pipes, Flanges, forgings , gaskets etc.	HT, Chemical & Mechanical Properties, Heat treatment.	100%	Material Test Certificates / Test Lab Certificates	H	H	R
3.0	**In process Inspection**						
3.1	Machining of components and assembly	Visual, Dimensions.	100%	Supplier's Test Records	-	H	-

Copyright EIL – All rights reserved

SL NO.	STAGE/ ACTIVITY	CHARACTERISTICS	QUANTUM OF CHECK	RECORD	SCOPE OF INSPECTION		
					SUB SUPPLIER	SUPPLIER	EIL/TPIA
4.0	**Final Inspection**						
4.2	NDT , Post Weld Heat Treatment (PWHT) (If specified)	• Radiography for weld joints • Dye Penetration test. • Post Weld Heat Treatment of welds,	100%	NDT reports / PWHT chart	-	H	R
4.1	Final Inspection	• Visual check for all items • Dimensional checks. • D.P check for all welds • Hydrostatic test on cage and float / displacer • Calibration check including accuracy and repeatability. • I.R. test on transmitter • Load driving capability check on transmitter • Smart /HART transmitter function checks • Functional checks for hand held portable communicator for smart transmitters • Functional checks for fieldbus transmitter.	100%	Supplier's Test Records and Inspection Witness Record	-	H	RW
4.3	Submission of certificates / Documents	• Certificate from testing agency like BASSEFA, FM, PTB, CMRI, etc. for instruments for use in specified hazardous area/ FISCO approval for fieldbus transmitter. • BIS approval for instruments manufactured indigenously for use in specified hazardous area. • Statutory approval certificates for	Prototype for each model	Statutory Approval Certificates / Type Test Certificates	-	H	R

Copyright EIL – All rights reserved

SL NO.	STAGE/ ACTIVITY	CHARACTERISTICS	QUANTUM OF CHECK	RECORD	SCOPE OF INSPECTION		
					SUB SUPPLIER	SUPPLIER	EIL/TPIA
		instruments from CCOE/PESO for use in specified hazardous area. • Degree of protection certificate for instrument housing. • Interoperability test certificate for field bus transmitter • Certificate for electromagnetic compatibility.					
5.0	**Painting**						
5.1	Painting	• Special cleaning and packing for oxygen and chlorine services • Pre treatment, primer and final paint, shade, thickness.	100%	Test Records	-	H	-
6.0	**Documentation and IC**						
6.1	Documentation and IC	• Review of Internal Test Reports & MTC • IC issuance.	100%	Supplier's Test Records / Inspection Certificate	-	H	H
6.2	Final Document submission	Compilation of Inspection reports ,drawings, etc as per VDR / PR	100%	Final data folder /Completeness certificate	-	H	H

Legends: H- Hold (Do not proceed without approval), Random 10% , R-Review, RW-Random witness, W- Witness (Give due notice, work may proceed after scheduled date).

NOTES :

1. This document describes the generic test requirements. Any additional test or inspection scope if specified in contract documents shall also be applicable. (Unless otherwise agreed upon).
2. Acceptance Norms for all the activities shall be as per PO/PR/ Standards referred there in/ Job specifications /Approved documents

Copyright EIL – All rights reserved

रिसीवर एवं प्रैशर मानकों के लिए निरीक्षण व परीक्षण योजना

INSPECTION AND TEST PLAN FOR RECEIVER & PRESSURE GAUGES

Rev. No.	Date	Purpose	Prepared by	Checked by	Standards Committee Convenor	Standards Bureau Chairman
					Approved by	
3	09.01.14	Revised and Re-issud	MJ	RS	SCG	SC
2	15.07.11	Revised and Re issued	GS	SA	AKC	DM
1	02.01.08	Revised and Re-issued	SA	CRM	MVKK	VC
0	30.04.02	Issued for implementation	RG	AKC	AKB	GRR

Copyright EIL – All rights reserved

Abbreviations

CCE or CCOE	:	Chief Controller of Explosives	MPT	:	Magnetic Particle Testing
CEIL	:	Certification Engineers International Limited	MRT	:	Mechanical Run Test
CIMFR	:	Central Institute of Mining & Fuel Research	NPSH	:	Net Positive Suction Head
DFT	:	Dry Film Thickness	NDT	:	Non Destructive Testing
DT	:	Destructive Testing	PO	:	Purchase Order
ERTL	:	Electronics Regional Test Laboratory	PESO	:	Petroleum Explosive Safety Organization
FCRI	:	Fluid Control Research Institute	PQR	:	Procedure Qualification Record
FR	:	Fire Retardant	PR	:	Purchase Requisition
FAT	:	Factory Acceptance Test	PMI	:	Positive Material Identification
HMI	:	Human Machine Interface	RT	:	Radiography Testing
HT	:	Heat Treatment	TC	:	Test Certificate
HIC	:	Hydrogen Induced Cracking	TPI or TPIA	:	Third Party Inspection Agency
ITP	:	Inspection and Test Plan	VDR	:	Vendor Data Requirements
IP	:	Ingress Protection	WPS	:	Welding Procedure Specification
IC	:	Inspection Certificate	WPQ	:	Welders Performance Qualification
LPT	:	Liquid Penetrate Testing			

Inspection Standards Committee

Convenor : Mr. S.C. GUPTA

Members:

Mr. R.K. Singh	Mr. Rajeev Kumar	Mr. Himangshu Pal
Mr.Neeraj Mathur	Mr. T Kamalakannan	Mr. Deepak Gupta (Project)
Mr. Mayank Jain		

Copyright EIL – All rights reserved

1.0 SCOPE:

This Inspection and Test Plan covers the minimum testing requirements for Industrial Type Pressure Receiver Gauges.

2.0 REFERENCE DOCUMENTS:

PO/PR & Standards referred there in /Job specifications / Approved documents.

3.0 INSPECTION AND TEST REQUIREMENTS:

SL NO.	STAGE/ ACTIVITY	CHARACTERISTICS	QUANTUM OF CHECK	RECORD	SCOPE OF INSPECTION		
					SUB SUPPLIER	SUPPLIER	EIL/TPIA
1.0	**Procedures**						
2.0	**Material Inspection**						
2.1	Incoming Material like Pressure Element, Cases, Glass, Flanges, gauge savers, snubber, syphon etc.	Chemical and Mechanical Properties	100%	Material Test Certificates / Test records	H	H	R
3.0	**In process Inspection**						
3.1	Assembly and calibration of pressure gauge	Calibration, Overpressure, Hysteresis, Accuracy	100%	Test records	--	H	-
4.0	**Final Inspection**						
4.1	Final Inspection	• Visual • Dimensional • Calibration • Over Pressure • Vacuum test (if applicable) • Hydro test on snubbers/gauges savers(as applicable)	100%	Test records	---	H	R

Copyright EIL – All rights reserved

SL NO.	STAGE/ ACTIVITY	CHARACTERISTICS	QUANTUM OF CHECK	RECORD	SCOPE OF INSPECTION		
					SUB SUPPLIER	SUPPLIER	EIL/TPIA
4.2	Type tests on Assembled Pressure Gauges	Type tests: • Test for influence of Temperature • Shock test • Endurance test • Weather Proof Construction of housing	One sample per model & range	Type Test Certificates	---	H	R
5.0	**Painting**	---	---	---	---	---	---
6.0	**Documentation and IC**						
6.1	Documentation and IC	• Reviews of Internal Test Reports • Degree of protection certificate for enclosure • IC issuance	-	Supplier Test Records / Type test certificate / IC	-	H	H
6.2	Final Document submission	Compilation of Inspection reports ,drawings, etc as per VDR / PR	100%	Final data folder /Completeness certificate	-	H	H

Legends: H- Hold (Do not proceed without approval), Random -10% , R-Review, RW-Random witness, W- Witness (Give due notice, work may proceed after scheduled date).

NOTES (As applicable):

1. This document describes the generic test requirements. Any additional test or inspection scope if specified in contract documents shall also be applicable. (Unless otherwise agreed upon).
2. Acceptance Norms for all the activities shall be as per PO/PR/ Standards referred there in/ Job specifications /Approved documents

Copyright EIL – All rights reserved

तापीय यन्त्रों एवं थर्मोवैल्स के लिए निरीक्षण व परीक्षण योजना

INSPECTION AND TEST PLAN FOR TEMPERATURE GAUGES AND THERMO WELLS

Rev. No.	Date	Purpose	Prepared by	Checked by	Standards Committee Convenor	Standards Bureau Chairman
					Approved by	
3	09.01.14	Revised and Re-issued	MJ	RS	SCG	SC
2	15.07.11	Revised and Re-issued	GS	SA	AKC	DM
1	02.01.08	Revised and Re-issued	SA	CRM	MVKK	VC
0	09.12.02	Issued for implementation	RG	AKC	AKB	GRR

Copyright EIL – All rights reserved

Abbreviations:

AS	:	Alloy Steel
BASEEFA	:	British Approval Service for Electrical Equipment in Flammable Atmospheres
BIS	:	Bureau of Indian Standards
CCE or CCOE	:	Chief Controller of Explosives
CEIL	:	Certification Engineers International Limited
CIMFR	:	Central Institute of Mining & Fuel Research
CE	:	Carbon Equivalent
DFT	:	Dry Film Thickness
DT	:	Destructive Testing
DPT	:	Dye Penetrate Testing
ERTL	:	Electronics Regional Test Laboratory
FCRI	:	Fluid Control Research Institute
FM	:	Factory Mutual
FLP	:	Flame Proof
HIC	:	Hydrogen Induced Cracking
ITP	:	Inspection and Test Plan
IP	:	Ingress Protection
IC	:	Inspection Certification
IGC	:	Inter Granular Corrosion
IEC	:	International Electro technical Commission
JEC	:	Japanese Electro technical Committee
LPT	:	Liquid Penetrate Testing
MPT/MT	:	Magnetic Particle Testing
MRT	:	Mechanical Run Test
MTC	:	Material Test Certificate
MOC	:	Material of Construction
NPSH	:	Net Positive Suction Head
NDT	:	Non Destructive Testing
NEMA	:	National Electrical Manufacturers Association
PO	:	Purchase Order
PESO	:	Petroleum Explosive Safety Organization
PQR	:	Procedure Qualification Record
PR	:	Purchase Requisition
PMI	:	Positive Material Identification
PVC	:	Poly Vinyl Chloride
QC	:	Quality Control
RT	:	Radiography Testing
TC	:	Test Certificate
TPI or TPIA	:	Third Party Inspection Agency
UT	:	Ultrasonic Testing
UL	:	Under writer Laboratories
VDR	:	Vendor Data Requirement
WPS	:	Welding Procedure Specification
WPQ	:	Welders Performance Qualification
XLPE	:	Cross Linked Poly Ethylene

Inspection Standards Committee

Convenor : Mr. S.C. GUPTA

Members:

Mr. R.K. Singh
Mr.Neeraj Mathur
Mr. Mayank Jain
Mr. Rajeev Kumar
Mr. T Kamalakannan
Mr. Himangshu Pal
Mr. Deepak Gupta (Project)

Copyright EIL – All rights reserved

1.0 SCOPE:

This Inspection and Test Plan covers the minimum inspection and testing requirements for Temperature Gauges and Thermowells.

2.0 REFERENCE DOCUMENTS:

PO/PR & Standards referred there in /Job specifications / Approved documents.

3.0 INSPECTION AND TEST REQUIREMENTS:

SL NO.	STAGE/ ACTIVITY	CHARACTERISTICS	QUANTUM OF CHECK	RECORD	SCOPE OF INSPECTION		
					SUB SUPPLIER	SUPPLIER	EIL/TPIA
1.0	**Procedures**						
1.1	WPS/PQR/WPQ	Welding procedure Qualification	100%	WPS PQR WPQ	---	H	W (New) R (Existing)
2.0	**Material Inspection**						
2.1	Incoming Materials like Flanges, Thermowell Bar stock, Bimetal strip, Capillary, Pipe, etc.	Chemical & Mechanical Properties	100%	Material Test Certificates	H	H (Note 1)	R
3.0	**In process Inspection**						

Copyright EIL – All rights reserved

SL NO.	STAGE/ ACTIVITY	CHARACTERISTICS	QUANTUM OF CHECK	RECORD	SCOPE OF INSPECTION		
					SUB SUPPLIER	SUPPLIER	EIL/TPIA
3.1	Machining of components & Assembly.	Calibration, Overpressure, Hysteresis, Accuracy	100%	Test records	-	H	-
4.0	**Final Inspection**						
4.1	Final Inspection: Thermowells	• Radiography for weld joints • Dye Penetration test. • Post Weld Heat Treatment of welds	100%	NDT reports / PWHT chart	-	H	R
		• Visual • Dimensional check • Dye Penetration test of Weld joints	100%	Supplier's Test Records / Inspection Witness Record	---	H	R
		• Hydrostatic Testing a) Inside Pr. Testing at 100 / 200 Kg/cm2 b) Outside Pr. Testing as per Flange rating • Bore Concentricity Check	100%	Supplier's Test Records / Inspection Witness Record	---	H	R
4.2	Final Inspection Temperature Gauges	• Visual check • Dimensional check • Check for filling liquid (SAMA class) for filled type temperature gauges.	100%	Test Records	---	H	R
		• Calibration checks including accuracy, repeatability, over range, etc.	100%	Test Records	---	H	R

Copyright EIL – All rights reserved

SL NO.	STAGE/ ACTIVITY	CHARACTERISTICS	QUANTUM OF CHECK	RECORD	SCOPE OF INSPECTION		
					SUB SUPPLIER	SUPPLIER	EIL/TPIA
		• Type test certificate for Hermetic sealing • Case capillary compensation • Dry heat, Liquid immersion tests.	1 sample per model & range	Type Test Certificates	---	H	R
4.3	Assembly	• Confirmation of positive contact between Temperature Gauges and Thermowell Tip.	100%	Test Records	---	H	R
5.0	**Painting**						
5.1	Cleaning for special services, Painting	Special cleaning and packing for oxygen and chlorine services	100%	Test Records	---	H	---
6.0	**Documentation and IC**						
6.1	Documentation and IC	• Review of Internal Test Reports • Review of Type test reports • Issuance of Inspection Certificate	100%	Type Test Reports / Supplier Test Records / IC	-	H	H
6.2	Final Document submission	Compilation of Inspection reports ,drawings, etc as per VDR / PR	100%	Final data folder /Completeness certificate	-	H	H

Legends: H- Hold (Do not proceed without approval, Random -10, R-Review, RW-Random witness, W- Witness (Give due notice, work may proceed after scheduled date).

NOTES (As applicable):

1. All NACE, Hydrogen service, AS, SS flanges to be inspected by TPIA appointed by the Main Supplier. CS flanges up to size 24" – 300 ANSI will be accepted on review of Supplier Test Certificates. Supplier test certificate to be reviewed by TPIA.
2. This document describes the generic test requirements. Any additional test or inspection scope if specified in contract documents shall also be applicable. (Unless otherwise agreed upon).
3. Acceptance Norms for all the activities shall be as per PO/PR/ Standards referred there in/ Job specifications /Approved documents

Copyright EIL – All rights reserved

कन्ट्रोल वाल्वों के लिए
निरीक्षण व परीक्षण योजना

INSPECTION AND TEST PLAN
FOR
CONTROL VALVES

Rev. No.	Date	Purpose	Prepared by	Checked by	Standards Committee Convenor	Standards Bureau Chairman
					Approved by	
3	20.09.13	Revised and Reissued	MJ	RS	SCG	DM
2	22.03.12	Revised and Reissued	MJ	GS	AKC	DM
1	09.05.08	Revised and Reissued	RB	SKD	SKP	VC
0	09.12.02	Issued for implementation	RG	AKC	AKB	GRR

Copyright EIL – All rights reserved

Abbreviations

AS	:	Alloy Steel	MRT	:	Mechanical Run Test
BASEEFA	:	British Approval Service for Electrical Equipment in Flammable Atmospheres	MPT/MT	:	Magnetic Particle Testing
			MTC	:	Material Test Certificates
BIS	:	Bureau of Indian Standards	MOC	:	Material of Construction
CCE or CCOE	:	Chief Controller of Explosives	NPSH	:	Net Positive Suction Head
CEIL	:	Certification Engineers International Limited	NDT	:	Non Destructive Testing
CIMFR	:	Central Institute of Mining & Fuel Research	NEMA	:	National Electrical Manufacturers Association
CE	:	Carbon Equivalent	PO	:	Purchase Order
DFT	:	Dry Film Thickness	PESO	:	Petroleum Explosive Safety Organization
DT	:	Destructive Testing	PQR	:	Procedure Qualification Record
DP or DPT	:	Dye Penetrate Testing	PR	:	Purchase Requisition
ERTL	:	Electronics Regional Test Laboratory	PMI	:	Positive Material Identification
FCRI	:	Fluid Control Research Institute	PTB	:	Physikalisch-Technische Bundesanstalt
FM	:	Factory Mutual	QC	:	Quality Control
FLP	:	Flame Proof	RT	:	Radiography Testing
HART	:	Highway Addressable Remote Transducer	SS	:	Stainless Steel
HV	:	High Voltage	TC	:	Test Certificate
ITP	:	Inspection and Test Plan	TPI or TPIA	:	Third Party Inspection Agency
IP	:	Ingress Protection	UT	:	Ultrasonic Testing
IC	:	Inspection Certification	UL	:	Under writer Laboratories
IR	:	Insulation Resistance	VDR	:	Vendor Data Requirement
IEC	:	International Electro technical Commission	WPS	:	Welding Procedure Specification
JEC	:	Japanese Electro technical Committee	WPQ	:	Welders Performance Qualification
LPT	:	Liquid Penetrate Testing	XLPE	:	Cross Linked Poly Ethylene

Inspection Standards Committee

Convenor : Mr. S C Gupta

Members:

Mr. R.K. Singh	Mr. Rajeev Kumar	Mr. Himangshu Pal
Mr.Neeraj Mathur	Mr. T Kamalakannan	Mr. Deepak Gupta (Project)
Mr. Mayank Jain		

Copyright EIL – All rights reserved

1.0 SCOPE

This Inspection and Test Plan covers the minimum inspection and testing requirements for Control valve.

2.0 REFERENCE DOCUMENTS

PO/PR / Standards referred there in /Job specifications / Approved documents.

3.0 INSPECTION AND TEST REQUIREMENTS

SL NO.	STAGE/ ACTIVITY	CHARACTERISTICS	QUANTUM OF CHECK	RECORD	SCOPE OF INSPECTION		
					SUB SUPPLIER	SUPPLIER	EIL/TPIA
1.0	**Procedures**	--	--	--	--	--	--
1.1	WPS/PQR/WPQ	Welding procedure Qualification for welds, overlays as applicable	100%	WPS PQR WPQ	--	H	W (New) R (Existing)
2.0	**Material Inspection**						
2.1	Incoming Material like Forgings & casting for body/ bonnet, wetted parts like plug, Seat, cage, Stem. Accessories such as Positioners, I/P Converters, Solenoid valves, Limit Switches and Air filter Regulators etc.	Chemical & Mechanical Properties, HT Make, model no, functional check.	100%	Material Test Certificates / Test Lab Certificates	H	H	R
3.0	**In process Inspection**						
3.1	Stellited & Hardened Trim (As specified)	D P Test	100%	Supplier's Test Records		H	R

Copyright EIL – All rights reserved

SL NO.	STAGE/ ACTIVITY	CHARACTERISTICS	QUANTUM OF CHECK	RECORD	SCOPE OF INSPECTION		
					SUB SUPPLIER	SUPPLIER	EIL/TPIA
4.0	**Final Inspection**						
4.2	NDT , Post Weld Heat Treatment (PWHT) (If specified)	• Radiography for weld joints • Dye Penetration test. • Post Weld Heat Treatment of welds,	100%	NDT reports / PWHT chart	-	H	R
4.1	Final Inspection on assembled Valve	• Visual / Dimensional check • Hydrostatic test. • Helium leak test (if specified). • Check for valve characteristics like stroke, Linearity & Hysteresis, etc. • Functional tests including : i) Seat leakage test, lift characteristics. ii) Test on smart positioners. iii) Control valve dynamic response and response time verification.(If specified) iv) Test on Accessories. • Interoperability test for Field bus positioners. • Pneumatic test on actuator on representative samples. • Type test for valves in cryogenic service.(if specified) • Partial stroke test / valve signature • capability of smart and field bus transmitters to accept multimeters and check for configuration, calibration, diagnostics through Hand Held terminal.	100%	Inspection Witness Record	-	H	RW

Copyright EIL – All rights reserved

SL NO.	STAGE/ ACTIVITY	CHARACTERISTICS	QUANTUM OF CHECK	RECORD	SCOPE OF INSPECTION		
					SUB SUPPLIER	SUPPLIER	EIL/TPIA
4.3	Submission of certificates/document	• Certificate from testing agency like BASEEFA, FM, PTB, CIMFR etc. for accessories like solenoid valves, I/P converters, Limit switches etc. for use in specified hazardous area. • BIS approval for explosion proof construction of above accessories manufactured indigenously. • Statutory approval certificates for instruments from CCOE/PESO for use in specified hazardous area. • Degree of protection certificate (IP) for instrument housing. • Fire Safe Certification as applicable.	Prototype for each model	Statutory Approval Certificates / Type Test Certificates	-	H	R
5.0	**Painting**						
5.1	Packing	• Cleaning for oxygen and chlorine services. • Suitable protection to prevent entry of foreign material. • Lubrication for valves, which require external lubrication.	100%	Test Records	-	H	-
6.0	**Documentation and IC**						
6.1	Documentation and IC	• Review of Internal Test Reports, MTC • Issuance of Inspection Certificate	100%	/ Supplier Test Records / IC	-	H	H
6.2	Final Document submission	Compilation of Inspection reports ,drawings, etc as per VDR / PR	100%	Final data folder /Completeness certificate	-	H	H

Copyright EIL – All rights reserved

Legends: H- Hold (Do not proceed without approval, R- Review, RW-Random witness (As specified or 10 % - Samples must include min 1 No of each type), W- Witness (Give due notice, work may proceed after scheduled date).

NOTES :-

1. This document describes the generic test requirements. Any additional test or inspection scope if specified in contract documents shall also be applicable. (Unless otherwise agreed upon).
2. Acceptance Norms for all the activities shall be as per PO/PR/ Standards referred there in/ Job specifications /Approved documents

Copyright EIL – All rights reserved

इलेक्ट्रानिक / वायवाय उपकरणों के लिए निरीक्षण व परीक्षण योजना

INSPECTION AND TEST PLAN FOR ELECTRONIC / PNEUMATIC INSTRUMENTS

Rev. No.	Date	Purpose	Prepared by	Checked by	Standards Committee Convenor	Standards Bureau Chairman
					Approved by	
3	21.11.2013	Revised and Reissued	MJ	RS	SCG	SC
2	22.03.2012	Revised and Reissued	MJ	GS	AKC	DM
1	02.01.08	Revised and Re-issued	SA	CRM	MVKK	VC
0	03.03.03	Issued for implementation	RG	AKC	AKB	GRR

Copyright EIL – All rights reserved

Abbreviations

AS	:	Alloy Steel
BASEEFA	:	British Approval Service for Electrical Equipment in Flammable Atmospheres
BIS	:	Bureau of Indian Standards
CCE or CCOE	:	Chief Controller of Explosives
CEIL	:	Certification Engineers International Limited
CIMFR	:	Central Institute of Mining & Fuel Research
CE	:	Carbon Equivalent
DFT	:	Dry Film Thickness
DT	:	Destructive Testing
DP or DPT	:	Dye Penetrate Testing
ERTL	:	Electronics Regional Test Laboratory
FCRI	:	Fluid Control Research Institute
FM	:	Factory Mutual
FLP	:	Flame Proof
HART	:	Highway Addressable Remote Transducer
HV	:	High Voltage
ITP	:	Inspection and Test Plan
IP	:	Ingress Protection
IC	:	Inspection Certification
IR	:	Insulation Resistance
IEC	:	International Electro technical Commission
JEC	:	Japanese Electro technical Committee
LPT	:	Liquid Penetrate Testing
MRT	:	Mechanical Run Test
MPT/MT	:	Magnetic Particle Testing
MTC	:	Material Test Certificates
MOC	:	Material of Construction
NPSH	:	Net Positive Suction Head
NDT	:	Non Destructive Testing
NEMA	:	National Electrical Manufacturers Association
PO	:	Purchase Order
PESO	:	Petroleum Explosive Safety Organization
PQR	:	Procedure Qualification Record
PR	:	Purchase Requisition
PMI	:	Positive Material Identification
PTB	:	Physikalisch-Technische Bundesanstalt
QC	:	Quality Control
RT	:	Radiography Testing
SS	:	Stainless Steel
TC	:	Test Certificate
TPI or TPIA	:	Third Party Inspection Agency
UT	:	Ultrasonic Testing
UL	:	Under writer Laboratories
VDR	:	Vendor Data Requirement
WPS	:	Welding Procedure Specification
WPQ	:	Welders Performance Qualification
XLPE	:	Cross Linked Poly Ethylene

Inspection Standards Committee

Convenor : Mr. S C Gupta

Members:

Mr. R.K. Singh	Mr. Rajeev Kumar	Mr. Himangshu Pal
Mr.Neeraj Mathur	Mr. T Kamalakannan	Mr. Deepak Gupta (Project)
Mr. Mayank Jain		

Copyright EIL – All rights reserved

1.0 SCOPE

This Inspection and Test Plan covers the minimum inspection and testing requirements of following types of Electronic / Pneumatic Instruments.

a) Pressure/ temperature instruments
b) Differential pressure instruments
c) Receiver instruments
d) Controllers

2.0 REFERENCE DOCUMENTS

PO/PR / Standards referred there in /Job specifications / Approved documents.

3.0 INSPECTION AND TEST REQUIREMENTS

SL NO.	STAGE/ ACTIVITY	CHARACTERISTICS	QUANTUM OF CHECK	RECORD	SCOPE OF INSPECTION		
					SUB SUPPLIER	SUPPLIER	EIL/TPIA
1.0	**Procedures**	--	--	--	--	--	--
2.0	**Material Inspection**						
2.1	Incoming Material like sensors, housings, flanges, body castings, studs/nuts gaskets plugs etc.	Physical/chemical properties , Heat Treatment as applicable	100%	Manufacturer's Test Certificates / Material Test Certificates	H	H	R
3.0	**In process Inspection**						
3.1	Instrument assembly	Dimensions, Insulation resistance, Sensor Characterization, calibration, performance.	100%	Supplier's Test Records	-	H	-
4.0	**Final Inspection**						

Copyright EIL – All rights reserved

SL NO.	STAGE/ ACTIVITY	CHARACTERISTICS	QUANTUM OF CHECK	RECORD	SCOPE OF INSPECTION		
					SUB SUPPLIER	SUPPLIER	EIL/TPIA
4.1	Final Inspection on assembled Instruments	• Visual • Dimension check • Calibration check including accuracy, hysteresis, repeatability. • Power supply and Air supply variation check. • Static pressure test • Over range protection. • Vacuum test for transmitters required for vacuum service. • Load driving capability check • Check for zero and span adjustments(From remote & local) • Diagnostic check for smart transmitter • Check for Hart protocol operations for smart transmitters (if specified) including multi master operation. • Functional checks for hand held portable communicator for smart transmitters including: a) Configuration of transmitters b) Calibration of transmitters c) Display of process variables d) Diagnostics e) Continuous output from transmitter during communication with field communicator. f) Capability of configuring other make of transmitters.	100% by Supplier	Supplier's Test Records / Inspection Witness Record	-	H	RW

Copyright EIL – All rights reserved

SL NO.	STAGE/ ACTIVITY	CHARACTERISTICS	QUANTUM OF CHECK	RECORD	SCOPE OF INSPECTION		
					SUB SUPPLIER	SUPPLIER	EIL/TPIA
		g) Detection of plugged impulse lines & output configuration (for fieldbus transmitter) h) Display of inbuilt control algorithm (fieldbus transmitter) • PID operation check for controllers. • Transmitter power supply check for receiver instruments. • Response Time check • Protection against short circuit & reverse voltage. • Zero elevation /suppression test for level transmitter • Bump less transfer check for controllers from manual to auto mode and vice-versa. • PID operation check for controllers. • Accessories check including air filter regulators, mounting accessories etc.	100%	Supplier's Test Records / Inspection Witness Record		H	RW
4.2	Submission of certificates / Documents	• Certificate from testing agency like BASSEFA, FM, PTB, CMIFR, etc. for instruments for use in specified hazardous area/ fisco approval for fieldbus transmitter. • BIS approval for instruments manufactured indigenously for use in specified hazardous area. • Statutory approval certificates for instruments from /PESO for use in specified hazardous area. • Degree of protection certificate for	sample	Statutory Approval Certificates / Type Test Reports	-	H	R

Copyright EIL – All rights reserved

SL NO.	STAGE/ ACTIVITY	CHARACTERISTICS	QUANTUM OF CHECK	RECORD	SCOPE OF INSPECTION		
					SUB SUPPLIER	SUPPLIER	EIL/TPIA
		instrument housing. • Interoperability test certificate for field bus transmitter • Certificate for electromagnetic compatibility and transient protection as per IEC 61000-4 • Certified values of failure rates, probability of failure on demand (PFD) and test intervals for safety Integrity level (SIL) analysis.					
5.0	**Painting**						
5.1	Painting	• Special cleaning and packing for oxygen and chlorine services	100%	Packing list / Supplier's Records	-	H	-
6.0	**Documentation and IC**						
6.1	Documentation and IC	• Review of Internal Test Reports, MTC • Device Description files • IC issuance.	100%	Supplier's Test Records / Inspection Certificate	-	H	H
6.2	Final Document submission	Compilation of Inspection reports ,drawings, etc as per VDR / PR	100%	Final data folder /Completeness certificate	-	H	H

Copyright EIL – All rights reserved

Legends: H- Hold (Do not proceed without approval), R-Review, RW-Random witness (As specified or 10 % - Samples must include min 1 No of each type), W- Witness (Give due notice, work may proceed after scheduled date).

NOTES :-

1. This document describes the generic test requirements. Any additional test or inspection scope if specified in contract documents shall also be applicable. (Unless otherwise agreed upon).
2. Acceptance Norms for all the activities shall be as per PO/PR/ Standards referred there in/ Job specifications /Approved documents

Copyright EIL – All rights reserved

परितालिका वाल्वों के लिए निरीक्षण एवं परीक्षण योजना

INSPECTION AND TEST PLAN FOR SOLENOID VALVES

Rev. No.	Date	Purpose	Prepared by	Checked by	Standards Committee Convenor	Standards Bureau Chairman
					Approved by	
2	21.11.2013	Revised and Reissued	MJ	RS	SCG	SC
1	22.03.2012	Revised and Reissued	MJ	GS	AKC	DM
0	01.12.2008	Issued for implementation	RB	SKD	SKP	VC

Copyright EIL – All rights reserved

Abbreviations

AS	:	Alloy Steel	MRT	:	Mechanical Run Test
BASEEFA	:	British Approval Service for Electrical Equipment in Flammable Atmospheres	MPT/MT	:	Magnetic Particle Testing
			MTC	:	Material Test Certificates
BIS	:	Bureau of Indian Standards	MOC	:	Material of Construction
CCE or CCOE	:	Chief Controller of Explosives	NPSH	:	Net Positive Suction Head
CEIL	:	Certification Engineers International Limited	NDT	:	Non Destructive Testing
CIMFR	:	Central Institute of Mining & Fuel Research	NEMA	:	National Electrical Manufacturers Association
CE	:	Carbon Equivalent	PO	:	Purchase Order
DFT	:	Dry Film Thickness	PESO	:	Petroleum Explosive Safety Organization
DT	:	Destructive Testing	PQR	:	Procedure Qualification Record
DP or DPT	:	Dye Penetrate Testing	PR	:	Purchase Requisition
ERTL	:	Electronics Regional Test Laboratory	PMI	:	Positive Material Identification
FCRI	:	Fluid Control Research Institute	PTB	:	Physikalisch-Technische Bundesanstalt
FM	:	Factory Mutual	QC	:	Quality Control
FLP	:	Flame Proof	RT	:	Radiography Testing
HART	:	Highway Addressable Remote Transducer	SS	:	Stainless Steel
HV	:	High Voltage	TC	:	Test Certificate
ITP	:	Inspection and Test Plan	TPI or TPIA	:	Third Party Inspection Agency
IP	:	Ingress Protection	UT	:	Ultrasonic Testing
IC	:	Inspection Certification	UL	:	Under writer Laboratories
IR	:	Insulation Resistance	VDR	:	Vendor Data Requirement
IEC	:	International Electro technical Commission	WPS	:	Welding Procedure Specification
JEC	:	Japanese Electro technical Committee	WPQ	:	Welders Performance Qualification
LPT	:	Liquid Penetrate Testing	XLPE	:	Cross Linked Poly Ethylene

Inspection Standards Committee

Convenor : Mr. S C Gupta

Members:

Mr. R.K. Singh	Mr. Rajeev Kumar	Mr. Himangshu Pal
Mr.Neeraj Mathur	Mr. T Kamalakannan	Mr. Deepak Gupta (Project)
Mr. Mayank Jain		

Copyright EIL – All rights reserved

1.0 SCOPE

This Inspection and Test Plan covers the minimum inspection and testing requirements for Solenoid valves.

2.0 REFERENCE DOCUMENTS

PO/PR / Standards referred there in /Job specifications / Approved documents.

3.0 INSPECTION AND TEST REQUIREMENTS

SL NO.	STAGE/ ACTIVITY	CHARACTERISTICS	QUANTUM OF CHECK	RECORD	SCOPE OF INSPECTION		
					SUB SUPPLIER	SUPPLIER	EIL/TPIA
1.0	**Procedures**	--	--	--	--	--	--
2.0	**Material Inspection**						
2.1	Incoming Material like body, conductor material etc.	Material identification, Conductor resistance and insulation of conductors	100%	Material test certificates / Test lab certificates	H	H	R
3.0	**In process Inspection**						
3.1	Solenoid valve assembly	Visual, Dimensional	100%	Supplier's test records	-	H	-
4.0	**Final Inspection**						
4.1	Final Inspection	• Visual Checks • Dimensional checks • HV Test • Insulation Resistance test • Pneumatic test by Air/Nitrogen. • Seat leakage test by Air /Nitrogen • Operational test including verification of pickup and drop voltage	100%	Supplier's records	-	H	R

Copyright EIL – All rights reserved

SL NO.	STAGE/ ACTIVITY	CHARACTERISTICS	QUANTUM OF CHECK	RECORD	SCOPE OF INSPECTION		
					SUB SUPPLIER	SUPPLIER	EIL/TPIA
4.2	Submission of certificates / Documents	• Certificate from agencies like BASEEFA, UL/FM, PTB, CIMFR etc. for suitability in specified hazardous area. • PESO/CCE approval certificates for use in electrically hazardous areas • Degree of protection certificate (IP) housing. • Valid BIS license for indigenous supply.	Prototype for each model	Statutory Approval Certificates / Type Test Certificates	-	H	R
5.0	**Painting**						
5.1	Painting and Packing	• Special cleaning and packing for oxygen and chlorine services • Pre treatment, primer and final paint, shade, thickness	100%	Packing list / Supplier's Records	-	H	-
6.0	**Documentation and IC**						
6.1	Documentation and IC	• Review of Internal Test Reports, MTC • IC issuance.	100%	Supplier's Test Records / Inspection Certificate	-	H	H
6.2	Final Document submission	Compilation of Inspection reports ,drawings, etc as per VDR / PR	100%	Final data folder /Completeness certificate	-	H	H

Legends: H- Hold (Do not proceed without approval), R-Review, RW-Random witness (As specified or 10 % - Samples must include min 1 No of each type), W- Witness (Give due notice, work may proceed after scheduled date).

NOTES :-

1. This document describes the generic test requirements. Any additional test or inspection scope if specified in contract documents shall also be applicable. (Unless otherwise agreed upon).

Copyright EIL – All rights reserved

2. Acceptance Norms for all the activities shall be as per PO/PR/ Standards referred there in/ Job specifications /Approved documents

Copyright EIL – All rights reserved

ऑन–ऑफ वाल्वों के लिए निरीक्षण एवं परीक्षण योजना

INSPECTION AND TEST PLAN FOR ON-OFF VALVES

Rev. No.	Date	Purpose	Prepared by	Checked by	Standards Committee Convenor	Standards Bureau Chairman
					Approved by	
2	21.11.2013	Revised and Reissued	MJ	RS	SCG	SC
1	22.03.2012	Revised and Reissued	MJ	GS	AKC	DM
0	01.12.2008	Issued for implementation	RB	SKD	SKP	VC

Copyright EIL – All rights reserved

Abbreviations

AS	:	Alloy Steel
BASEEFA	:	British Approval Service for Electrical Equipment in Flammable Atmospheres
BIS	:	Bureau of Indian Standards
CCE or CCOE	:	Chief Controller of Explosives
CEIL	:	Certification Engineers International Limited
CIMFR	:	Central Institute of Mining & Fuel Research
CE	:	Carbon Equivalent
DFT	:	Dry Film Thickness
DT	:	Destructive Testing
DP or DPT	:	Dye Penetrate Testing
ERTL	:	Electronics Regional Test Laboratory
FCRI	:	Fluid Control Research Institute
FM	:	Factory Mutual
FLP	:	Flame Proof
HART	:	Highway Addressable Remote Transducer
HV	:	High Voltage
ITP	:	Inspection and Test Plan
IP	:	Ingress Protection
IC	:	Inspection Certification
IR	:	Insulation Resistance
IEC	:	International Electro technical Commission
JEC	:	Japanese Electro technical Committee
LPT	:	Liquid Penetrate Testing
MRT	:	Mechanical Run Test
MPT/MT	:	Magnetic Particle Testing
MTC	:	Material Test Certificates
MOC	:	Material of Construction
NPSH	:	Net Positive Suction Head
NDT	:	Non Destructive Testing
NEMA	:	National Electrical Manufacturers Association
PO	:	Purchase Order
PESO	:	Petroleum Explosive Safety Organization
PQR	:	Procedure Qualification Record
PR	:	Purchase Requisition
PMI	:	Positive Material Identification
PTB	:	Physikalisch-Technische Bundesanstalt
QC	:	Quality Control
RT	:	Radiography Testing
SS	:	Stainless Steel
TC	:	Test Certificate
TPI or TPIA	:	Third Party Inspection Agency
UT	:	Ultrasonic Testing
UL	:	Under writer Laboratories
VDR	:	Vendor Data Requirement
WPS	:	Welding Procedure Specification
WPQ	:	Welders Performance Qualification
XLPE	:	Cross Linked Poly Ethylene

Inspection Standards Committee

Convenor : Mr. S C Gupta

Members:

Mr. R.K. Singh
Mr.Neeraj Mathur
Mr. Mayank Jain
Mr. Rajeev Kumar
Mr. T Kamalakannan
Mr. Himangshu Pal
Mr. Deepak Gupta (Project)

Copyright EIL – All rights reserved

1.0 SCOPE

This Inspection and Test Plan covers the minimum inspection and testing requirements for ON-OFF Valves.

2.0 REFERENCE DOCUMENTS

PO/PR / Standards referred there in /Job specifications / Approved documents.

3.0 INSPECTION AND TEST REQUIREMENTS

SL NO.	STAGE/ ACTIVITY	CHARACTERISTICS	QUANTUM OF CHECK	RECORD	SCOPE OF INSPECTION		
					SUB SUPPLIER	SUPPLIER	EIL/TPIA
1.0	**Procedures**	--	--	--	--	--	--
1.1	WPS/PQR/WPQ	Welding procedure Qualification for welds as applicable/Stelliting	100%	WPS PQR WPQ	--	H	W (New) R (Existing)
2.0	**Material Inspection**						
2.1	a). Incoming Material like Valve Body Casting & frogings etc. b) Bought out items like Limit Switches, Air Filter Regulator, Solenoid valves etc.	a. Physical and Chemical Properties, Heat Treatment as applicable b. Make, Model No , functional checks.	100%	Material Test Certificates / Test Lab Certificates/ Manufacturer's TC	H	H	R
3.0	**In process Inspection**						
3.1	Valve assembly	• Visual, Dimensional,	100%	Supplier's Test Records	-	H	-

Copyright EIL – All rights reserved

SL NO.	STAGE/ ACTIVITY	CHARACTERISTICS	QUANTUM OF CHECK	RECORD	SCOPE OF INSPECTION		
					SUB SUPPLIER	SUPPLIER	EIL/TPIA
3.2	Stelliting & Hardening	Check for hardness	100%	Supplier's Test Records		H	R
4.0	**Final Inspection**						
4.1	Final Inspection	• Visual and Dimensional checks. • Hydrostatic test on all valve bodies. • Pneumatic test on actuators. • Valve stroke Test / functional test • Manual Valve test • Partial Stroke Test / Valve signature • Seat leakage test • Open-Close operation time • Cryogenic test if specified • Helium leak test if specified	100%	Supplier's Test Records and Inspection Witness Record		H	RW
4.2	NDT	• NDT as applicable	100 %	NDT reports		H	R
4.3	Submission of certificates / Documents	• Certificate from testing agency like BASEEFA, CSA, FM/UL, PTB, CIMFR etc. for compliance to applicable hazardous areas for electrically operated items. • Statutory approval certificates for instruments from PESO for use in specified hazardous area. • Cryogenic service test certificate as per applicable specification, if specified. • Fire safe test certificates for fire safe valves as per applicable specification, if specified	Prototype for each model	Statutory Approval Certificates / Type Test Certificates	-	H	R

Copyright EIL – All rights reserved

SL NO.	STAGE/ ACTIVITY	CHARACTERISTICS	QUANTUM OF CHECK	RECORD	SCOPE OF INSPECTION		
					SUB SUPPLIER	SUPPLIER	EIL/TPIA
5.0	**Painting**						
5.1	Painting and Packing	• Special cleaning and packing for oxygen and chlorine services • Pre treatment, primer and final paint, shade, thickness.	100%	Packing list / Supplier's Records	-	H	-
6.0	**Documentation and IC**						
6.1	Documentation and IC	• Review of Internal Test Reports • IC issuance.	100%	Supplier's Test Records / Inspection Certificate	-	H	H
6.2	Final Document submission	Compilation of Inspection reports ,drawings, etc as per VDR / PR	100%	Final data folder /Completeness certificate	-	H	H

Legends: H- Hold (Do not proceed without approval), R-Review, RW-Random witness (As specified or 10 % - Samples must include min 1 No of each type) , W- Witness (Give due notice, work may proceed after scheduled date).

NOTES :-

1. This document describes the generic test requirements. Any additional test or inspection scope if specified in contract documents shall also be applicable. (Unless otherwise agreed upon).
2. Acceptance Norms for all the activities shall be as per PO/PR/ Standards referred there in/ Job specifications /Approved documents

Copyright EIL – All rights reserved

थर्मोकपल्स,आर टी डी एवं थर्मोवैल्स के लिए निरीक्षण व परीक्षण योजना

INSPECTION AND TEST PLAN FOR ~~THERMOCOUPLES, RTDs~~ AND THERMOWELLS

Rev. No.	Date	Purpose	Prepared by	Checked by	Standards Committee Convenor	Standards Bureau Chairman
					Approved by	
3	09.01.14	Revised and Re-issued	MJ	RS	SCG	SC
2	15.07.11	Revised and Re-issued	GS	SA	AKC	DM
1	05.05.08	Revised and Reissued	SA	SKD	SKP	VC
0	09.12.02	Issued for implementation	RG	AKC	AKB	GRR

Copyright EIL – All rights reserved

Abbreviations:

AS	:	Alloy Steel
BASEEFA	:	British Approval Service for Electrical Equipment in Flammable Atmospheres
BIS	:	Bureau of Indian Standards
CCE or CCOE	:	Chief Controller of Explosives
CEIL	:	Certification Engineers International Limited
CIMFR	:	Central Institute of Mining & Fuel Research
CE	:	Carbon Equivalent
DFT	:	Dry Film Thickness
DT	:	Destructive Testing
DPT	:	Dye Penetrate Testing
ERTL	:	Electronics Regional Test Laboratory
FCRI	:	Fluid Control Research Institute
FM	:	Factory Mutual
FLP	:	Flame Proof
HIC	:	Hydrogen Induced Cracking
ITP	:	Inspection and Test Plan
IP	:	Ingress Protection
IC	:	Inspection Certification
IGC	:	Inter Granular Corrosion
IEC	:	International Electro technical Commission
JEC	:	Japanese Electro technical Committee
LPT	:	Liquid Penetrate Testing
MPT/MT	:	Magnetic Particle Testing
MRT	:	Mechanical Run Test
MTC	:	Material Test Certificate
MOC	:	Material of Construction
NPSH	:	Net Positive Suction Head
NDT	:	Non Destructive Testing
NEMA	:	National Electrical Manufacturers Association
PO	:	Purchase Order
PESO	:	Petroleum Explosive Safety Organization
PQR	:	Procedure Qualification Record
PR	:	Purchase Requisition
PMI	:	Positive Material Identification
PVC	:	Poly Vinyl Chloride
QC	:	Quality Control
RT	:	Radiography Testing
TC	:	Test Certificate
TPI or TPIA	:	Third Party Inspection Agency
UT	:	Ultrasonic Testing
UL	:	Under writer Laboratories
VDR	:	Vendor Data Requirement
WPS	:	Welding Procedure Specification
WPQ	:	Welders Performance Qualification
XLPE	:	Cross Linked Poly Ethylene

Inspection Standards Committee

Convenor : Mr. S.C. GUPTA

Members:

Mr. R.K. Singh
Mr.Neeraj Mathur
Mr. Mayank Jain
Mr. Rajeev Kumar
Mr. T Kamalakannan
Mr. Himangshu Pal
Mr. Deepak Gupta (Project)

Copyright EIL – All rights reserved

1.0 SCOPE:

This Inspection and Test Plan covers the minimum inspection and testing requirements for Thermocouples, RTD's, and Thermowells.

2.0 REFERENCE DOCUMENTS:

PO/PR / Standards referred there in /Job specifications / Approved documents.

3.0 INSPECTION AND TEST REQUIREMENTS:

SL NO.	STAGE/ ACTIVITY	CHARACTERISTICS	QUANTUM OF CHECK	RECORD	SCOPE OF INSPECTION		
					SUB SUPPLIER	SUPPLIER	EIL/TPIA
1.0	**Procedures**						
1.1	WPS/PQR/WPQ	Welding procedure Qualification	100%	WPS PQR WPQ	---	H	W (New) R (Existing)
2.0	**Material Inspection**						
2.1	Incoming Materials like Flanges, Thermowell Bar stock, MI Cable, RTD element, Pipe etc.	• Material Identification, Chemical & Mechanical Properties, Heat Treatment (as applicable) • EMF characteristics for T/C element & Temperature / Resistance characteristics for RTD sensing resistor. • Junction Boxes, Cable glands, Interface device etc.	100%	Material Test Certificates / Test Lab Certificates	H	H (Note 1)	R
3.0	**In process Inspection**						
3.1	Machining of components and their assembly	• Dimensions / finish • Calibration check on after junction formation • IR test	100%	Supplier's Test Records	-	H	-

Copyright EIL – All rights reserved

SL NO.	STAGE/ ACTIVITY	CHARACTERISTICS	QUANTUM OF CHECK	RECORD	SCOPE OF INSPECTION		
					SUB SUPPLIER	SUPPLIER	EIL/TPIA
4.0	**Final Inspection**						
4.1	NDT , Post Weld Hea Treatment (PWHT) (If specified)	• Radiography for weld joints • Dye Penetration test. • Post Weld Heat Treatment of welds,	100%	NDT reports / PWHT chart	-	H	R
4.2	Thermo wells	• Visual and dimensional check • Hydro test (outside & Inside) • Bore Concentricity check	100%	Test Records	---	H	R
4.3	RTD / Thermocouples	• Visual and dimensional check. • IR check • Grounding check (as applicable) • Calibration checks including accuracy, repeatability hysteresis, over range etc.	100%	Test Records	----	H	R
4.4	Submission of certificates / Documents	• Certificate from testing agency like BASSEFA, FM, PTB, CMRI, etc. for temperature switch enclosure for use in specified hazardous area. • Statutory approval certificates from PESO for use in specified hazardous area • BIS approval for explosion proof construction manufactured indigenously • Degree of protection certificate (IP) for enclosure. • Wake Frequency Calculation (As applicable)	100%	Statutory test certificates / Suppliers test records	----	H	R
5.0	**Painting**						
5.1	Painting	• Special cleaning and packing for oxygen and chlorine services	100%	Test Records	---	H	---

Copyright EIL – All rights reserved

SL NO.	STAGE/ ACTIVITY	CHARACTERISTICS	QUANTUM OF CHECK	RECORD	SCOPE OF INSPECTION		
					SUB SUPPLIER	SUPPLIER	EIL/TPIA
6.0	**Documentation and IC**						
6.1	Documentation and IC	• Review of Internal Test Reports, MTC, • Bought out items TC • IC issuance.	100%	Supplier's Test Records / Mfg TC/ Inspection Certificate	-	H	H
6.2	Final Document submission	Compilation of Inspection reports ,drawings, etc as per VDR / PR	100%	Final data folder /Completeness certificate	-	H	H

Legends: H- Hold (Do not proceed without approval), R-Review, RW-Random witness (As specified or 10 % - Samples must include min 1 No of each type), W- Witness (Give due notice, work may proceed after scheduled date).

NOTES (As applicable):

1. All NACE, Hydrogen service, AS, SS flanges to be inspected by TPIA appointed by the Main Supplier. CS flanges up to size 24" – 300 ANSI will be accepted on review of Supplier Test Certificates.
2. This document describes the generic test requirements. Any additional test or inspection scope if specified in contract documents shall also be applicable. (Unless otherwise agreed upon).
3. Acceptance Norms for all the activities shall be as per PO/PR/ Standards referred there in/ Job specifications /Approved documents

Copyright EIL – All rights reserved

सिगनल केबलों के लिए निरीक्षण व परीक्षण योजना

INSPECTION AND TEST PLAN FOR SIGNAL CABLES

Rev. No.	Date	Purpose	Prepared by	Checked by	Standards Committee Convenor	Standards Bureau Chairman
					Approved by	
3	21.11.13	Revised and Reissued	MJ	RS	SCG	SC
2	22.03.12	Revised and Reissued	MJ	GS	AKC	DM
1	05.05.08	Revised and Reissued	SA	SKD	SKP	VC
0	30.04.02	Issued for implementation	RG	AKC	AKB	GRR

Copyright EIL – All rights reserved

Abbreviations

AS	:	Alloy Steel
BASEEFA	:	British Approval Service for Electrical Equipment in Flammable Atmospheres
BIS	:	Bureau of Indian Standards
CCE or CCOE	:	Chief Controller of Explosives
CEIL	:	Certification Engineers International Limited
CIMFR	:	Central Institute of Mining & Fuel Research
CE	:	Carbon Equivalent
DFT	:	Dry Film Thickness
DT	:	Destructive Testing
DP or DPT	:	Dye Penetrate Testing
ERTL	:	Electronics Regional Test Laboratory
FCRI	:	Fluid Control Research Institute
FM	:	Factory Mutual
FLP	:	Flame Proof
HART	:	Highway Addressable Remote Transducer
HV	:	High Voltage
ITP	:	Inspection and Test Plan
IP	:	Ingress Protection
IC	:	Inspection Certification
IR	:	Insulation Resistance
IEC	:	International Electro technical Commission
JEC	:	Japanese Electro technical Committee
LPT	:	Liquid Penetrate Testing
MRT	:	Mechanical Run Test
MPT/MT	:	Magnetic Particle Testing
MTC	:	Material Test Certificates
MOC	:	Material of Construction
NPSH	:	Net Positive Suction Head
NDT	:	Non Destructive Testing
NEMA	:	National Electrical Manufacturers Association
PO	:	Purchase Order
PESO	:	Petroleum Explosive Safety Organization
PQR	:	Procedure Qualification Record
PR	:	Purchase Requisition
PMI	:	Positive Material Identification
PTB	:	Physikalisch-Technische Bundesanstalt
QC	:	Quality Control
RT	:	Radiography Testing
SS	:	Stainless Steel
TC	:	Test Certificate
TPI or TPIA	:	Third Party Inspection Agency
UT	:	Ultrasonic Testing
UL	:	Under writer Laboratories
VDR	:	Vendor Data Requirement
WPS	:	Welding Procedure Specification
WPQ	:	Welders Performance Qualification
XLPE	:	Cross Linked Poly Ethylene

Inspection Standards Committee

Convenor : Mr. S C Gupta

Members:

Mr. R.K. Singh
Mr.Neeraj Mathur
Mr. Mayank Jain
Mr. Rajeev Kumar
Mr. T Kamalakannan
Mr. Himangshu Pal
Mr. Deepak Gupta (Project)

Copyright EIL – All rights reserved

1.0 SCOPE

This Inspection and Test Plan covers the minimum inspection and testing requirements for Signal Cables.

2.0 REFERENCE DOCUMENTS

PO/PR / Standards referred there in /Job specifications / Approved documents.

3.0 INSPECTION AND TEST REQUIREMENTS

SL NO.	STAGE/ ACTIVITY	CHARACTERISTICS	QUANTUM OF CHECK	RECORD	SCOPE OF INSPECTION		
					SUB SUPPLIER	SUPPLIER	EIL/TPIA
1.0	**Procedures**	--	--	--	--	--	--
2.0	**Material Inspection**						
2.1	Incoming raw material like Copper, Aluminium, PVC	Dimensions, Physical and Chemical Properties.	100%	Material Test Certificates / Test Lab Certificates	H	H	R
3.0	**In process Inspection**						
3.1	Manufacturing	Dimensions at various stages of manufacturing, Spark test, Stage Inspection as per relevant standard for Conductors, Insulation, Inner sheath, Armour, Outer sheath etc.	100%	Supplier's Test Records	-	H	-
4.0	**Final Inspection**						

Copyright EIL – All rights reserved

SL NO.	STAGE/ ACTIVITY	CHARACTERISTICS	QUANTUM OF CHECK	RECORD	SCOPE OF INSPECTION		
					SUB SUPPLIER	SUPPLIER	EIL/TPIA
4.1	Final Inspection	• Visual, Drum details, Size, Ends capping, Marking on outer sheath (such as incremental length, type, manufacturer's name), Colour etc.	100%	Supplier's Test Records/ Inspection witness record	-	H	RW
4.2	Routine Tests	• High Voltage • Spark test Conductor resistance. • Armour resistance test. (for mining cables). • Mutual capacitance and capacitance between any core or screen. • Inductance and L/R ratio.	100%	Supplier's Test Records	-	H	RW
4.3	Acceptance Tests	• Dimension checks, Laying of cores, Pair twisting, Shield overlap. • Conductor Resistance, Drain Wire Resistance. • Insulation resistance . • High Voltage. • Armour resistance test (for mining cables). • Test for rodent and termite repulsion. • Mutual capacitance and capacitance between any core or screen. • Inductance & L/R ratio. • Thickness of insulation and sheath. • Tests on Insulation and Sheath as per IS/IEC * • Uniformity of Zinc coating on armour. • Oxygen and Temperature Index • FR test as per IS 10810 part 61. • Acid generation test as per IEC (for fire	100%	Supplier's Test Records	-	H	RW

Copyright EIL – All rights reserved

SL NO.	STAGE/ ACTIVITY	CHARACTERISTICS	QUANTUM OF CHECK	RECORD	SCOPE OF INSPECTION		
					SUB SUPPLIER	SUPPLIER	EIL/TPIA
		resistance cable) • Smoke density test (for fire resistance cable) • Overall finish and Drum length check. • Fire survival test (if applicable)					
4.4	Type Tests	• FR test as per IS-10810 part 62. • Fire resistance test as per IEC 331 (If applicable). • Electrostatic Noise Rejection.	Sample basis	Type test report/ Supplier's test report	-	H	R
5.0	**Painting**						
5.1	Packing	• Visual, Packing list. • Proper packing to avoid any damage during transportation.	100%	Supplier's Test Records	-	H	-
6.0	**Documentation and IC**						
6.1	Documentation and IC	• Review of Internal Test Reports (Routine, acceptance, type), MTC. • IC issuance.	100%	Supplier's Test Records / Inspection Certificate	-	H	H

Copyright EIL – All rights reserved

SL NO.	STAGE/ ACTIVITY	CHARACTERISTICS	QUANTUM OF CHECK	RECORD	SCOPE OF INSPECTION		
					SUB SUPPLIER	SUPPLIER	EIL/TPIA
6.2	Final Document submission	Compilation of Inspection reports ,drawings, etc as per VDR / PR	100%	Final data folder /Completeness certificate	-	H	H

* - Tensile and Elongation (without ageing), Hot deformation, Heat shock and Shrinkage tests on insulation and sheath shall be witnessed by EIL/TPIA, all other tests including volume resistivity as per IS-5831 shall be carried out by supplier and test reports shall be reviewed by EIL/TPIA.

Legends: H- Hold (Do not proceed without approval), Random 10% , R-Review, RW-Random witness (As specified or 10 % - Samples must include min 1 No of each type), W- Witness (Give due notice, work may proceed after scheduled date).

NOTES :-

1. This document describes the generic test requirements. Any additional test or inspection scope if specified in contract documents shall also be applicable. (Unless otherwise agreed upon).
2. Acceptance Norms for all the activities shall be as per PO/PR/ Standards referred there in/ Job specifications /Approved documents

Copyright EIL – All rights reserved

जंक्शन बक्सों और केबल ग्लोडों के लिए निरीक्षण व परीक्षण योजना

INSPECTION AND TEST PLAN FOR JUNCTION BOXES AND CABLE GLANDS

Rev. No.	Date	Purpose	Prepared by	Checked by	Standards Committee Convenor	Standards Bureau Chairman
					Approved by	
3	09.01.14	Revised and Re-issued	MJ	RS	SCG	SC
2	15.07.11	Revised and Re-issued	GS	SA	AKC	DM
1	09.05.08	Revised and Reissued	RB	SKD	SKP	VC
0	09.12.02	Issued for implementation	RG	AKC	AKB	GRR

Copyright EIL – All rights reserved

Abbreviations

CCE or CCOE	:	Chief Controller of Explosives	MPT	:	Magnetic Particle Testing
CEIL	:	Certification Engineers International Limited	MRT	:	Mechanical Run Test
CIMFR	:	Central Institute of Mining & Fuel Research	NPSH	:	Net Positive Suction Head
DFT	:	Dry Film Thickness	NDT	:	Non Destructive Testing
DT	:	Destructive Testing	PO	:	Purchase Order
ERTL	:	Electronics Regional Test Laboratory	PESO	:	Petroleum Explosive Safety Organization
FCRI	:	Fluid Control Research Institute	PQR	:	Procedure Qualification Record
FR	:	Fire Retardant	PR	:	Purchase Requisition
FAT	:	Factory Acceptance Test	PMI	:	Positive Material Identification
HMI	:	Human Machine Interface	RT	:	Radiography Testing
HT	:	Heat Treatment	TC	:	Test Certificate
HIC	:	Hydrogen Induced Cracking	TPI or TPIA	:	Third Party Inspection Agency
ITP	:	Inspection and Test Plan	VDR	:	Vendor Data Requirements
IP	:	Ingress Protection	WPS	:	Welding Procedure Specification
IC	:	Inspection Certificate	WPQ	:	Welders Performance Qualification
LPT	:	Liquid Penetrate Testing			

Inspection Standards Committee

Convenor : Mr. S.C. GUPTA

Members:

Mr. R.K. Singh	Mr. Rajeev Kumar	Mr. Himangshu Pal
Mr.Neeraj Mathur	Mr. T Kamalakannan	Mr. Deepak Gupta (Project)
Mr. Mayank Jain		

Copyright EIL – All rights reserved

1.0 SCOPE

This Inspection and Test Plan covers the minimum inspection and testing requirements for Junction Boxes and Cable Glands.

2.0 REFERENCE DOCUMENTS

PO/PR / Standards referred therein /Job specifications / Approved documents.

3.0 INSPECTION AND TEST REQUIREMENTS

SL NO.	STAGE/ ACTIVITY	CHARACTERISTICS	QUANTUM OF CHECK	RECORD	SCOPE OF INSPECTION		
					SUB SUPPLIER	SUPPLIER	EIL/TPIA
1.0	**Procedures**	---	---	---	---	---	---
2.0	**Material Inspection**						
2.1	Incoming materials like Castings, Terminals etc.	Material Identification, Visual, Pressure test on castings for hazardous area Junction boxes.	100%	Material Test Certificates / Lab test certificates	H	H	-
3.0	**In process Inspection**						
3.1	Machining of components	Visual, Dimensions	100%	Test Records	-	H	-
4.0	**Final Inspection**						

Copyright EIL – All rights reserved

SL NO.	STAGE/ ACTIVITY	CHARACTERISTICS	QUANTUM OF CHECK	RECORD	SCOPE OF INSPECTION		
					SUB SUPPLIER	SUPPLIER	EIL/TPIA
4.1	Final Inspection	• Visual, dimensional, clearance & Paint shade check for all items. • Verification of Terminal Nos., sizes and no. of entries • Bill of material verification. • Warning plate for junction boxes and marking on cable glands, Adapters, Plugs etc. • Pressure test on casting for flameproof junction boxes. • High Voltage and insulation resistance test. • Air leak test report on pneumatic JBs.	100%	Supplier's Test Records	-	H	R
4.2	Documentation and IC	• Certificate from authority like BASEEFA, FM, PTB, ATEX, UL, CIMFR etc. for use in specified hazardous area. • Statutory approval certificates for instruments from PESO for use in specified hazardous area. • Degree of protection certificate for instrument housing.	Prototype for type tests	Statutory Approval Certificates / Type Test Certificates / Suppliers Internal test records	-	H	R
5.0	**Painting**						
5.1	(Painting of JBs prior to assembly)	Pre treatment, primer, final paint shade, thickness	100%	Suppliers Internal Test Reports	----	H	R

Copyright EIL – All rights reserved

SL NO.	STAGE/ ACTIVITY	CHARACTERISTICS	QUANTUM OF CHECK	RECORD	SCOPE OF INSPECTION		
					SUB SUPPLIER	SUPPLIER	EIL/TPIA
6.0	**Documentation and IC**						
6.1	Documentation and IC	• Review of Internal Test Reports • IC issuance	100%	Supplier's Test Records / Inspection Certificate	-	H	H
6.2	Final Document submission	Compilation of Inspection reports ,drawings, etc as per VDR / PR	100%	Final data folder /Completeness certificate	-	H	H

Legends: H- Hold (Do not proceed without approval), R-Review, RW-Random witness (As specified or 10 % - Samples must include min 1 No of each type), W-Witness (Give due notice, work may proceed after scheduled date).

NOTES (As applicable):

1. This document describes the generic test requirements. Any additional test or inspection scope if specified in contract documents shall also be applicable. (Unless otherwise agreed upon).
2. Acceptance Norms for all the activities shall be as per PO/PR/ Standards referred there in/ Job specifications /Approved documents

Copyright EIL – All rights reserved

यान्त्रिक ट्यूब फिटिंग्स के लिए निरीक्षण व परीक्षण योजना

INSPECTION AND TEST PLAN FOR INSTRUMENT TUBE FITTINGS

Rev. No.	Date	Purpose	Prepared by	Checked by	Standards Committee Convenor	Standards Bureau Chairman
					Approved by	
3	09.01.14	Revised and Re-issued	MJ	RS	SCG	SC
2	15.07.11	Revosed and Reissued	GS	SA	AKC	DM
1	05.05.08	Revised and Reissued	SA	SKD	SKP	VC
0	30.04.02	Issued for implementation	RG	AKC	AKB	GRR

Copyright EIL – All rights reserved

Abbreviations

CCE or CCOE	:	Chief Controller of Explosives	MPT	:	Magnetic Particle Testing
CEIL	:	Certification Engineers International Limited	MRT	:	Mechanical Run Test
CIMFR	:	Central Institute of Mining & Fuel Research	NPSH	:	Net Positive Suction Head
DFT	:	Dry Film Thickness	NDT	:	Non Destructive Testing
DT	:	Destructive Testing	PO	:	Purchase Order
ERTL	:	Electronics Regional Test Laboratory	PESO	:	Petroleum Explosive Safety Organization
FCRI	:	Fluid Control Research Institute	PQR	:	Procedure Qualification Record
FR	:	Fire Retardant	PR	:	Purchase Requisition
FAT	:	Factory Acceptance Test	PMI	:	Positive Material Identification
HMI	:	Human Machine Interface	RT	:	Radiography Testing
HT	:	Heat Treatment	TC	:	Test Certificate
HIC	:	Hydrogen Induced Cracking	TPI or TPIA	:	Third Party Inspection Agency
ITP	:	Inspection and Test Plan	VDR	:	Vendor Data Requirements
IP	:	Ingress Protection	WPS	:	Welding Procedure Specification
IC	:	Inspection Certificate	WPQ	:	Welders Performance Qualification
LPT	:	Liquid Penetrate Testing			

Inspection Standards Committee

Convenor : Mr. S.C. GUPTA

Members:

Mr. R.K. Singh	Mr. Rajeev Kumar	Mr. Himangshu Pal
Mr.Neeraj Mathur	Mr. T Kamalakannan	Mr. Deepak Gupta (Project)
Mr. Mayank Jain		

Copyright EIL – All rights reserved

1.0 SCOPE:

This Inspection and Test Plan covers the minimum inspection and testing requirements for Instrument Tube Fittings.

2.0 REFERENCE DOCUMENTS:

PO/PR / Standards referred there in /Job specifications / Approved documents.

3.0 INSPECTION AND TEST REQUIREMENTS:

SL NO.	STAGE/ ACTIVITY	CHARACTERISTICS	QUANTUM OF CHECK	RECORD	SCOPE OF INSPECTION		
					SUB SUPPLIER	SUPPLIER	EIL/TPIA
1.0	**Procedures**	-	-	-	-	-	-
2.0	**Material Inspection**						
2.1	Incoming materials like bar stock, Forgings & Castings for Body / Bonnet, Trim material etc.	Material Identification, Chemical and Mechanical Properties, Hardness verification on parent material for ferrules.	100%	Material Test Certificates / Test Lab Certificates	H	H	R
3.0	**In process Inspection**						
3.1	Machining of Fittings	Visual, Dimensions.	100%	Test Records	-	H	-
4.0	**Final Inspection**						
4.1	Routine Tests	• Visual • Dimensions	Sampling as per applicable standard	Test Records	-	H	R

Copyright EIL – All rights reserved

SL NO.	STAGE/ ACTIVITY	CHARACTERISTICS	QUANTUM OF CHECK	RECORD	SCOPE OF INSPECTION		
					SUB SUPPLIER	SUPPLIER	EIL/TPIA
4.2	Type tests	Performance test and supplementary test as per ASTM • Examination of Specimen • Pneumatic proof test • Hydrostatic proof test • Impulse test • Flexure fatigue test • Tensile test • Burst test • Repeat Assembly • Rotary Flexure test • Mecurous Nitrate test (if applicable) • Thermal Cycling test • Elevated temperature Soak test • Stress Corrosion Test • Torsion Test • Shock test • Fire test • Vibration test	To be carried out once for each Size, Material, Rating	Type test report	-	H	R
5.0	**Painting**						
5.1	Cleaning for special services	• Cleaning for oxygen & chlorine services, if applicable	100%	Test record	-	H	-
6.0	**Documentation and IC**						
6.1	Documentation and IC	• Review of Internal Test Reports • IC issuance	100%	Supplier's Test Records / Inspection Certificate	-	-	H
6.2	Final Document submission	Compilation of Inspection reports, drawings, etc as per VDR / PR	100%	Final data folder	-	H	H

Copyright EIL – All rights reserved

SL NO.	STAGE/ ACTIVITY	CHARACTERISTICS	QUANTUM OF CHECK	RECORD	SCOPE OF INSPECTION		
					SUB SUPPLIER	SUPPLIER	EIL/TPIA
				/Completeness certificate			

Legends: H- Hold (Do not proceed without approval), Random -10%,R-Review, RW-Random witness, W- Witness (Give due notice, work may proceed after scheduled date).

NOTES (As applicable):

1. This document describes the generic test requirements. Any additional test or inspection scope if specified in contract documents shall also be applicable. (Unless otherwise agreed upon).
2. Acceptance Norms for all the activities shall be as per PO/PR/ Standards referred there in/ Job specifications /Approved documents

Copyright EIL – All rights reserved

इंस्ट्रूमेंट ट्यूबिगं
के लिए
निरीक्षण व परीक्षण योजना

INSPECTION AND TEST PLAN
FOR
INSTRUMENT TUBING

Rev. No.	Date	Purpose	Prepared by	Checked by	Standards Committee Convenor	Standards Bureau Chairman
					Approved by	
3	21.11.13	Revised and Reissued	MJ	RS	AKC	SC
2	22.03.12	Revised and Reissued	MJ	GS	AKC	DM
1	05.05.08	Revised and Reissued	SA	SKD	SKP	VC
0	29.11.02	Issued for implementation	RG	AKC	AKB	GRR

Copyright EIL – All rights reserved

Abbreviations

AS	:	Alloy Steel
BASEEFA	:	British Approval Service for Electrical Equipment in Flammable Atmospheres
BIS	:	Bureau of Indian Standards
CCE or CCOE	:	Chief Controller of Explosives
CEIL	:	Certification Engineers International Limited
CIMFR	:	Central Institute of Mining & Fuel Research
CE	:	Carbon Equivalent
DFT	:	Dry Film Thickness
DT	:	Destructive Testing
DP or DPT	:	Dye Penetrate Testing
ERTL	:	Electronics Regional Test Laboratory
FCRI	:	Fluid Control Research Institute
FM	:	Factory Mutual
FLP	:	Flame Proof
HART	:	Highway Addressable Remote Transducer
HV	:	High Voltage
ITP	:	Inspection and Test Plan
IP	:	Ingress Protection
IC	:	Inspection Certification
IR	:	Insulation Resistance
IEC	:	International Electro technical Commission
JEC	:	Japanese Electro technical Committee
LPT	:	Liquid Penetrate Testing
MRT	:	Mechanical Run Test
MPT/MT	:	Magnetic Particle Testing
MTC	:	Material Test Certificates
MOC	:	Material of Construction
NPSH	:	Net Positive Suction Head
NDT	:	Non Destructive Testing
NEMA	:	National Electrical Manufacturers Association
PO	:	Purchase Order
PESO	:	Petroleum Explosive Safety Organization
PQR	:	Procedure Qualification Record
PR	:	Purchase Requisition
PMI	:	Positive Material Identification
PTB	:	Physikalisch-Technische Bundesanstalt
QC	:	Quality Control
RT	:	Radiography Testing
SS	:	Stainless Steel
TC	:	Test Certificate
TPI or TPIA	:	Third Party Inspection Agency
UT	:	Ultrasonic Testing
UL	:	Under writer Laboratories
VDR	:	Vendor Data Requirement
WPS	:	Welding Procedure Specification
WPQ	:	Welders Performance Qualification
XLPE	:	Cross Linked Poly Ethylene

Inspection Standards Committee

Convenor : Mr. S C Gupta

Members:

Mr. R.K. Singh
Mr.Neeraj Mathur
Mr. Mayank Jain
Mr. Rajeev Kumar
Mr. T Kamalakannan
Mr. Himangshu Pal
Mr. Deepak Gupta (Project)

Copyright EIL – All rights reserved

1.0 SCOPE

This Inspection and Test Plan covers the minimum inspection and testing requirements for Instrument Tubing.

2.0 REFERENCE DOCUMENTS

PO/PR / Standards referred there in /Job specifications / Approved documents.

3.0 INSPECTION AND TEST REQUIREMENTS

SL NO.	STAGE/ ACTIVITY	CHARACTERISTICS	QUANTUM OF CHECK	RECORD	SCOPE OF INSPECTION		
					SUB SUPPLIER	SUPPLIER	EIL/TPIA
1.0	**Procedures**	--	--	--	--	--	--
2.0	**Material Inspection**						
2.1	Incoming Material like Mother pipes, Bars / Billets etc.	Chemical & Mechanical Properties, Heat Treatment as applicable	100%	Material Test Certificates / Test Lab Certificates	H	H	R
3.0	**In process Inspection**						
3.1	Cold draw / pilger operations, Heat treatment etc.	Dimensions, Finish, Temperature records	100%	Supplier's Test Records	-	H	-
4.0	**Final Inspection**						
		• Visual check • Dimensional test. • Chemical & Mechanical Properties					

Copyright EIL – All rights reserved

SL NO.	STAGE/ ACTIVITY	CHARACTERISTICS	QUANTUM OF CHECK	RECORD	SCOPE OF INSPECTION		
					SUB SUPPLIER	SUPPLIER	EIL/TPIA
4.1	Final Inspection	• Hydrostatic test (for SS & Bare Copper tubes). • Pneumatic test (for PVC coated Cu tubes) • Ball Test (for Copper tubes) • Eddy Current Examination of copper/SS tubes. • Product markings on tubes / label. • Hardness/ Tension test for SS tube.	100%	Supplier's Internal Test Records / Supplier's Inspection Witness Record	-	H	R
5.0	**Painting**						
5.1	Painting and Packing	• Visual • Suitable protection to prevent entry of foreign material. • Proper packing to prevent damage during transportation	100%	Packing list / Supplier's Records	-	H	-
6.0	**Documentation and IC**						
6.1	Documentation and IC	• Traceability of records • Review of Internal Test Reports, MTC • IC issuance.	100%	Supplier's Test Records / Inspection Certificate	-	H	H
6.2	Final Document submission	Compilation of Inspection reports ,drawings, etc as per VDR / PR	100%	Final data folder /Completeness certificate	-	H	H

Copyright EIL – All rights reserved

Legends: H- Hold (Do not proceed without approval), R-Review, RW-Random witness (As specified or 10 % - Samples must include min 1 No of each type), W- Witness (Give due notice, work may proceed after scheduled date).

NOTES :-

1. This document describes the generic test requirements. Any additional test or inspection scope if specified in contract documents shall also be applicable. (Unless otherwise agreed upon).
2. Acceptance Norms for all the activities shall be as per PO/PR/ Standards referred there in/ Job specifications /Approved documents

Copyright EIL – All rights reserved

इंस्ट्रूमेंट वाल्वों एवं मैनिफोल्डस के लिए निरीक्षण व परीक्षण योजना

INSPECTION AND TEST PLAN FOR INSTRUMENT VALVES AND MANIFOLDS

Rev. No.	Date	Purpose	Prepared by	Checked by	Standards Committee Convenor	Standards Bureau Chairman
					Approved by	
3	21.11.13	Revised and Reissued	MJ	RS	AKC	SC
2	22.03.12	Revised and Reissued	MJ	GS	AKC	DM
1	05.05.08	Revised and Reissued	SA	SKD	SKP	VC
0	29.11.02	Issued for implementation	RG	AKC	AKB	GRR

Copyright EIL – All rights reserved

Abbreviations

AS	:	Alloy Steel
BASEEFA	:	British Approval Service for Electrical Equipment in Flammable Atmospheres
BIS	:	Bureau of Indian Standards
CCE or CCOE	:	Chief Controller of Explosives
CEIL	:	Certification Engineers International Limited
CIMFR	:	Central Institute of Mining & Fuel Research
CE	:	Carbon Equivalent
DFT	:	Dry Film Thickness
DT	:	Destructive Testing
DP or DPT	:	Dye Penetrate Testing
ERTL	:	Electronics Regional Test Laboratory
FCRI	:	Fluid Control Research Institute
FM	:	Factory Mutual
FLP	:	Flame Proof
HART	:	Highway Addressable Remote Transducer
HV	:	High Voltage
ITP	:	Inspection and Test Plan
IP	:	Ingress Protection
IC	:	Inspection Certification
IR	:	Insulation Resistance
IEC	:	International Electro technical Commission
JEC	:	Japanese Electro technical Committee
LPT	:	Liquid Penetrate Testing
MRT	:	Mechanical Run Test
MPT/MT	:	Magnetic Particle Testing
MTC	:	Material Test Certificates
MOC	:	Material of Construction
NPSH	:	Net Positive Suction Head
NDT	:	Non Destructive Testing
NEMA	:	National Electrical Manufacturers Association
PO	:	Purchase Order
PESO	:	Petroleum Explosive Safety Organization
PQR	:	Procedure Qualification Record
PR	:	Purchase Requisition
PMI	:	Positive Material Identification
PTB	:	Physikalisch-Technische Bundesanstalt
QC	:	Quality Control
RT	:	Radiography Testing
SS	:	Stainless Steel
TC	:	Test Certificate
TPI or TPIA	:	Third Party Inspection Agency
UT	:	Ultrasonic Testing
UL	:	Under writer Laboratories
VDR	:	Vendor Data Requirement
WPS	:	Welding Procedure Specification
WPQ	:	Welders Performance Qualification
XLPE	:	Cross Linked Poly Ethylene

Inspection Standards Committee

Convenor : Mr. S C Gupta

Members:

Mr. R.K. Singh
Mr.Neeraj Mathur
Mr. Mayank Jain
Mr. Rajeev Kumar
Mr. T Kamalakannan
Mr. Himangshu Pal
Mr. Deepak Gupta (Project)

Copyright EIL – All rights reserved

1.0 SCOPE

This Inspection and Test Plan covers the minimum inspection and testing requirements for Instrument Valves and Manifolds.

2.0 REFERENCE DOCUMENTS

PO/PR / Standards referred there in /Job specifications / Approved documents.

3.0 INSPECTION AND TEST REQUIREMENTS

SL NO.	STAGE/ ACTIVITY	CHARACTERISTICS	QUANTUM OF CHECK	RECORD	SCOPE OF INSPECTION		
					SUB SUPPLIER	SUPPLIER	EIL/TPIA
1.0	**Procedures**	--	--	--	--	--	--
2.0	**Material Inspection**						
2.1	Incoming Material like Forgings, Bar-stock etc.	Chemical & Mechanical Properties, Heat Treatment as applicable	100%	Material Test Certificates / Test Lab Certificates	H	H	R
3.0	**In process Inspection**						
3.1	Machining of components and assembly	Visual, Dimension.	100%	Supplier's Test Records	-	H	-
4.0	**Final Inspection**						
4.1	Final Inspection	• Visual • Dimensional Check • Bill of Material for Mounting Brackets & Accessories • Functional Check.	100%	Supplier's Internal Test Records / Supplier's Inspection	-	H	R

Copyright EIL – All rights reserved

SL NO.	STAGE/ ACTIVITY	CHARACTERISTICS	QUANTUM OF CHECK	RECORD	SCOPE OF INSPECTION		
					SUB SUPPLIER	SUPPLIER	EIL/TPIA
		• Hydrostatic Test for shell and seat. • Pneumatic test for shell and seat.		Witness Record			
4.2	Submission of certificates/Document	• Type tests for each type of valve and manifold as per MSS-SP-99.	Prototype for each model	Statutory Approval Certificates / Type Test Certificates	-	H	R
5.0	**Painting**						
5.1	Painting and Packing	• Visual • Suitable protection to prevent entry of foreign material. • Cleaning for oxygen and chlorine services, if applicable. • Proper packing to prevent damage during transportation	100%	Packing list / Supplier's Records	-	H	-
6.0	**Documentation and IC**						
6.1	Documentation and IC	• Review of Internal Test Reports, MTC • IC issuance.	100%	Supplier's Test Records / Inspection Certificate	-	-	H
6.2	Final Document submission	Compilation of Inspection reports ,drawings, etc as per VDR / PR	100%	Final data folder /Completeness certificate	-	H	H

Copyright EIL – All rights reserved

Legends: H- Hold (Do not proceed without approval), R-Review, RW-Random witness (As specified or 10 % - Samples must include min 1 No of each type), W- Witness (Give due notice, work may proceed after scheduled date).

NOTES :-

1. This document describes the generic test requirements. Any additional test or inspection scope if specified in contract documents shall also be applicable. (Unless otherwise agreed upon).
2. Acceptance Norms for all the activities shall be as per PO/PR/ Standards referred there in/ Job specifications /Approved documents

Copyright EIL – All rights reserved

मास फ्लो मीटरों
के लिए
निरीक्षण व परीक्षण योजना

INSPECTION AND TEST PLAN
FOR
MASS FLOW METERS

Rev. No.	Date	Purpose	Prepared by	Checked by	Standards Committee Convenor	Standards Bureau Chairman
					Approved by	
3	21.11.13	Revised and Reissued	MJ	RS	SCG	SC
2	22.03.12	Revised and Re-issued	MJ	GS	AKC	DM
1	05.05.08	Revised and Reissued	SA	SKD	SKP	VC
0	29.11.02	Issued for implementation	RG	AKC	AKB	GRR

Copyright EIL – All rights reserved

Abbreviations

AS	:	Alloy Steel	MRT	:	Mechanical Run Test
BASEEFA	:	British Approval Service for Electrical Equipment in Flammable Atmospheres	MPT/MT	:	Magnetic Particle Testing
			MTC	:	Material Test Certificates
BIS	:	Bureau of Indian Standards	MOC	:	Material of Construction
CCE or CCOE	:	Chief Controller of Explosives	NPSH	:	Net Positive Suction Head
CEIL	:	Certification Engineers International Limited	NDT	:	Non Destructive Testing
CIMFR	:	Central Institute of Mining & Fuel Research	NEMA	:	National Electrical Manufacturers Association
CE	:	Carbon Equivalent	PO	:	Purchase Order
DFT	:	Dry Film Thickness	PESO	:	Petroleum Explosive Safety Organization
DT	:	Destructive Testing	PQR	:	Procedure Qualification Record
DP or DPT	:	Dye Penetrate Testing	PR	:	Purchase Requisition
ERTL	:	Electronics Regional Test Laboratory	PMI	:	Positive Material Identification
FCRI	:	Fluid Control Research Institute	PTB	:	Physikalisch-Technische Bundesanstalt
FM	:	Factory Mutual	QC	:	Quality Control
FLP	:	Flame Proof	RT	:	Radiography Testing
HART	:	Highway Addressable Remote Transducer	SS	:	Stainless Steel
HV	:	High Voltage	TC	:	Test Certificate
ITP	:	Inspection and Test Plan	TPI or TPIA	:	Third Party Inspection Agency
IP	:	Ingress Protection	UT	:	Ultrasonic Testing
IC	:	Inspection Certification	UL	:	Under writer Laboratories
IR	:	Insulation Resistance	VDR	:	Vendor Data Requirement
IEC	:	International Electro technical Commission	WPS	:	Welding Procedure Specification
JEC	:	Japanese Electro technical Committee	WPQ	:	Welders Performance Qualification
LPT	:	Liquid Penetrate Testing	XLPE	:	Cross Linked Poly Ethylene

Inspection Standards Committee

Convenor : Mr. S C Gupta

Members:

Mr. R.K. Singh
Mr.Neeraj Mathur
Mr. Mayank Jain
Mr. Rajeev Kumar
Mr. T Kamalakannan
Mr. Himangshu Pal
Mr. Deepak Gupta (Project)

Copyright EIL – All rights reserved

1.0 SCOPE

This Inspection and Test Plan covers the minimum inspection and testing requirements for Mass Flow Meters.

2.0 REFERENCE DOCUMENTS

PO/PR / Standards referred there in /Job specifications / Approved documents

3.0 INSPECTION AND TEST REQUIREMENTS

SL NO.	STAGE/ ACTIVITY	CHARACTERISTICS	QUANTUM OF CHECK	RECORD	SCOPE OF INSPECTION		
					SUB SUPPLIER	SUPPLIER	EIL/TPIA
1.0	**Procedures**						
1.1	WPS/PQR/WPQ	Welding procedure Qualification for welds as applicable	100%	WPS PQR WPQ	--	H	W (New) R (Existing)
2.0	**Material Inspection**						
2.1	Incoming Material like Meter body, Flanges, Wetted Parts, Steam Jacket etc.	Chemical & Mechanical Properties, Heat Treatment as applicable	100%	Material Test Certificates / Test Lab Certificates	H	H	R
3.0	**Inprocess Inspection**						
3.1	Machining of components	Visual, Dimensions.	100%	Supplier's Test Records	-	H	R

Copyright EIL – All rights reserved

SL NO.	STAGE/ ACTIVITY	CHARACTERISTICS	QUANTUM OF CHECK	RECORD	SCOPE OF INSPECTION		
					SUB SUPPLIER	SUPPLIER	EIL/TPIA
4.0	**Final Inspection**						
4.1	Final Inspection	• Visual check. • Dimensional check • Hydrostatic test. • Calibration and performance testing including accuracy and repeatability • Internal test report for Performance of smart & field bus transmitter. • Interoperability test certificate for field bus transmitter • Capability of smart and field bus based transmitters to accept multimasters/hand held configurators for calibration, diagnostics and maintenance. • Load driving capability test for transmitter.	100%	Supplier's Test Reports /Inspection Witness Record	---	H	RW
4.2	NDT	• NDT (as specified)	100%	NDT reports	-	H	R
4.3	Submission of certificates / Documents	• Certificate from testing agency like BASEEFA, FM, UL, PTB, CIMFR etc. for instruments for use in specified hazardous area application. • BIS approval for explosion proof construction of flow meter / transmitter manufactured indigenously. • Statutory approval certificates for instruments from CCOE/PESO for use in specified hazardous area. • Degree of protection certificate (IP) for instrument housing.	sample	Statutory Approval Certificates / Type Test Reports	-	H	R

Copyright EIL – All rights reserved

		• Certificate for electromagnetic compatibility and transient protection as per IEC 61000-4.					
5.0	**Painting**						
5.1	Painting and Packing	• Visual • Suitable protection to prevent entry of foreign material. • Proper packing to prevent any damage during transportationice • Cleaning for oxygen and chlorine service	100%	Packing list / Supplier's Records	-	H	---
6.0	**Documentation and IC**						
6.1	Documentation and IC	• Review of Internal Test Reports • IC issuance.	100%	Supplier's Test Records / Inspection Certificate	-	H	H
6.2	Final Document submission	Compilation of Inspection reports ,drawings, etc as per VDR / PR	100%	Final data folder /Completenes s certificate	-	H	H

Legends: H- Hold (Do not proceed without approval, R-Review, RW-Random witness (As specified or 10 % - Samples must include min 1 No of each type), W- Witness (Give due notice, work may proceed after scheduled date).

NOTES :-

1. This document describes the generic test requirements. Any additional test or inspection scope if specified in contract documents shall also be applicable. (Unless otherwise agreed upon).
2. Acceptance Norms for all the activities shall be as per PO/PR/ Standards referred there in/ Job specifications /Approved documents

Copyright EIL – All rights reserved

स्वचालित नियंत्रण वाल्वों / रेगुलेटरों के लिए निरीक्षण व परीक्षण योजना

INSPECTION AND TEST PLAN FOR SELF ACTUATED CONTROL VALVES / REGULATORS

Rev. No.	Date	Purpose	Prepared by	Checked by	Standards Committee Convenor	Standards Bureau Chairman
					Approved by	
4	01.08.16	Revised and Reissued	MM	RS	RKS	RN
3	21.11.13	Revised and Reissued	MJ	RS	SCG	SC
2	22.03.12	Revised and Reissued	MJ	GS	AKC	DM
1	10.06.08	Revised and Reissued	SA	SKD	SKP	VC
0	09.12.02	Issued for implementation	RG	AKC	AKB	GRR

Format No. 8-00-0001-F7 Rev. 0

Copyright EIL – All rights reserved

Abbreviations:

AS	:	Alloy Steel	LPT	:	Liquid Penetrate Testing
BIS	:	Bureau of Indian Standards	MRT	:	Mechanical Run Test
CEIL	:	Certification Engineers International Limited	MPT/MT	:	Magnetic Particle Testing
CIMFR	:	Central Institute of Mining & Fuel Research	MTC	:	Material Test Certificates
CE	:	Carbon Equivalent	MOC	:	Material of Construction
DFT	:	Dry Film Thickness	NPSH	:	Net Positive Suction Head
DT	:	Destructive Testing	NDT	:	Non Destructive Testing
DP or DPT	:	Dye Penetrate Testing	NEMA	:	National Electrical Manufacturers Association
ERTL	:	Electronics Regional Test Laboratory	PO	:	Purchase Order
FCRI	:	Fluid Control Research Institute	PESO	:	Petroleum Explosive Safety Organization
FM	:	Factory Mutual	PQR	:	Procedure Qualification Record
FLP	:	Flame Proof	PR	:	Purchase Requisition
HART	:	Highway Addressable Remote Transducer	PMI	:	Positive Material Identification
HV	:	High Voltage	PTB	:	Physikalisch-Technische Bundesanstalt
ITP	:	Inspection and Test Plan	QC	:	Quality Control
IP	:	Ingress Protection	RT	:	Radiography Testing
IC	:	Inspection Certification	SS	:	Stainless Steel
IR	:	Insulation Resistance	TC	:	Test Certificate
IEC	:	International Electro technical Commission	TPI or TPIA	:	Third Party Inspection Agency
JEC	:	Japanese Electro technical Committee	VDR	:	Vendor Data Requirement

Inspection Standards Committee

Convenor : Mr. R.K. Singh

Members: Mr. Rajeev Kumar, Mr. Neeraj Mathur, Mr. Deepak Gupta (Project), Mr. Himangshu Pal, Mr. T Kamalakannan, Mr. Mahendra Mittal

Copyright EIL – All rights reserved

1.0 SCOPE

This Inspection and Test Plan covers the minimum inspection and testing requirements for Self Actuated Control Valves / Regulators.

2.0 REFERENCE DOCUMENTS

PO/PR / Standards referred there in /Job specifications / Approved documents.

3.0 INSPECTION AND TEST REQUIREMENTS

SL NO.	STAGE/ ACTIVITY	CHARACTERISTICS	QUANTUM OF CHECK	RECORD	SCOPE OF INSPECTION		
					SUB SUPPLIER	SUPPLIER	EIL/TPIA
1.0	**Procedures**	--	--	--	--	--	--
2.0	**Material Inspection**						
2.1	Incoming materials like Forgings & Castings for Body / Bonnet, Trim material etc.	Mechanical & Chemical properties, heat treatment as applicable,	100%	Material Test Certificates / Test Lab Certificates	H	H	R
3.0	**In process Inspection**						
3.1	Machining of components	Visual, Dimensions	100%	Supplier's Test Records	-	H	-
4.0	**Final Inspection**						

Copyright EIL – All rights reserved

SL NO.	STAGE/ ACTIVITY	CHARACTERISTICS	QUANTUM OF CHECK	RECORD	SCOPE OF INSPECTION		
					SUB SUPPLIER	SUPPLIER	EIL/TPIA
4.1	Final Inspection	• Visual check for all items. • Correctness of model no., Tag plate, Connection size. • Physical verification of required accessories. • Hydro test (body). • Set pressure test & Functional test. • Seat leakage test. • Helium leak test (if specified)	100%	Supplier's Internal Test Records/ Inspection Witness Record	-	H	R/W
4.2	NDT	• NDT (as specified).	100%	NDT Reports	-	H	R
4.3	Submission of certificates/ Document	• Type test Certificate for droop within 10% or as per data sheet of set point for each type/model.	Sample	Type test report	-	H	R
5.0	**Painting**						
5.1	Painting	• Special cleaning and packing for oxygen and chlorine services • Pre treatment, primer and final paint, shade, thickness	100%	Test Records		H	-
6.0	**Documentation and IC**						
6.1	Documentation and IC	• Review of Internal Test Reports & MTCs • IC issuance.	100%	Supplier's Test Records /	-	-	H

Copyright EIL – All rights reserved

SL NO.	STAGE/ ACTIVITY	CHARACTERISTICS	QUANTUM OF CHECK	RECORD	SCOPE OF INSPECTION		
					SUB SUPPLIER	SUPPLIER	EIL/TPIA
				Inspection Certificate			
6.2	Final Document submission	Compilation of Inspection reports ,drawings, etc as per VDR / PR	100%	Final data folder /Completeness certificate	-	H	H

Legends: H- Hold (Do not proceed without approval), R-Review, RW-Random witness (As specified or 10 % - Samples must include min 1 No of each type), W- Witness (Give due notice, work may proceed after scheduled date).

NOTES :-

1. This document describes the generic test requirements. Any additional test or inspection scope if specified in contract documents shall also be applicable. (Unless otherwise agreed upon).
2. Acceptance Norms for all the activities shall be as per PO/PR/ Standards referred there in/ Job specifications /Approved documents

Copyright EIL – All rights reserved

अवरोधक ओरिफिस प्लेटों के लिए निरीक्षण व परीक्षण योजना

INSPECTION AND TEST PLAN FOR RESTRICTION ORIFICE PLATES

Rev. No.	Date	Purpose	Prepared by	Checked by	Standards Committee Convenor	Standards Bureau Chairman
					Approved by	
3.	09.01.14	Revised and Re-issued	MJ	RS	SCG	SC
2	15.07.11	Revised and Reissued	GS	SA	AKC	DM
1	09.05.08	Revised and Reissued	RB	SKD	SKP	VC
0	25.11.02	Issued for implementation	RG	AKC	AKB	GRR

Copyright EIL – All rights reserved

Page 155 of 227

Abbreviations

CCE or CCOE	:	Chief Controller of Explosives	MPT	:	Magnetic Particle Testing
CEIL	:	Certification Engineers International Limited	MRT	:	Mechanical Run Test
CIMFR	:	Central Institute of Mining & Fuel Research	NPSH	:	Net Positive Suction Head
DFT	:	Dry Film Thickness	NDT	:	Non Destructive Testing
DT	:	Destructive Testing	PO	:	Purchase Order
ERTL	:	Electronics Regional Test Laboratory	PESO	:	Petroleum Explosive Safety Organization
FCRI	:	Fluid Control Research Institute	PQR	:	Procedure Qualification Record
FR	:	Fire Retardant	PR	:	Purchase Requisition
FAT	:	Factory Acceptance Test	PMI	:	Positive Material Identification
HMI	:	Human Machine Interface	RT	:	Radiography Testing
HT	:	Heat Treatment	TC	:	Test Certificate
HIC	:	Hydrogen Induced Cracking	TPI or TPIA	:	Third Party Inspection Agency
ITP	:	Inspection and Test Plan	VDR	:	Vendor Data Requirements
IP	:	Ingress Protection	WPS	:	Welding Procedure Specification
IC	:	Inspection Certificate	WPQ	:	Welders Performance Qualification
LPT	:	Liquid Penetrate Testing			

Inspection Standards Committee

Convenor : Mr. S.C. GUPTA

Members:

Mr. R.K. Singh	Mr. Rajeev Kumar	Mr. Himangshu Pal
Mr.Neeraj Mathur	Mr. T Kamalakannan	Mr. Deepak Gupta (Project)
Mr. Mayank Jain		

Copyright EIL – All rights reserved

TC65436-R01
Page 15967 of 18388

Page 156 of 227

1.0 SCOPE

This Inspection and Test Plan covers the minimum inspection and testing requirements for Restriction Orifice Plates and Multistage Orifice Assemblies.

2.0 REFERENCE DOCUMENTS

PO/PR / Standards referred therein /Job specifications / Approved documents.

3.0 INSPECTION AND TEST REQUIREMENTS

SL NO.	STAGE/ ACTIVITY	CHARACTERISTICS	QUANTUM OF CHECK	RECORD	SCOPE OF INSPECTION		
					SUB SUPPLIER	SUPPLIER	EIL/TPIA
1.0	**Procedures**						
1.1	WPS/PQR/WPQ	Welding procedure Qualification for welding involved in Multistage orifice Assemblies, Meter Runs	100%	WPS PQR WPQ	--	H	W (New) R (Existing)
2.0	**Material Inspection**						
2.1	Incoming Material Plates, Pipes, flanges	Material Identification, Chemical and Mechanical Properties	100%	Material Test Certificates / Lab Test Certificates	H	H/R (Note 1)	R
3.0	**In process Inspection**						

Copyright EIL – All rights reserved

TC65436-R01
Page 15968 of 18388

SL NO.	STAGE/ ACTIVITY	CHARACTERISTICS	QUANTUM OF CHECK	RECORD	SCOPE OF INSPECTION		
					SUB SUPPLIER	SUPPLIER	EIL/TPIA
3.1	Machining of Plates	Dimensions, Smoothness verification	100%	Test Records	-	H	-
4.0	**Final Inspection**						
4.1	NDT , Post Weld Heat Treatment (PWHT) (If specified)	• Radiography for weld joints • Dye Penetration test. • Post Weld Heat Treatment of welds,	100%	NDT reports / PWHT chart	-	H	R
4.2	Final Inspection	• Visual Checks • Dimensional checks • Orifice Smoothness verification • Correctness of Punching • Physical Dimensional Verification • Liquid Penetrant check for all welds (Multistage). • Hydro test of complete Multistage Restriction Orifice • Review of Radiographic films (for butt welds)	100%	Test Records	-	H	RW
5.0	**Painting**						
5.1	Cleaning for special services, Painting of Multistage assemblies	• Special cleaning and packing for oxygen and chlorine services • Pre treatment, primer and final paint, shade, thickness	100%	Test Records		H	---
6.0	**Documentation and IC**						

Copyright EIL – All rights reserved

Page 158 of 227

SL NO.	STAGE/ ACTIVITY	CHARACTERISTICS	QUANTUM OF CHECK	RECORD	SCOPE OF INSPECTION		
					SUB SUPPLIER	SUPPLIER	EIL/TPIA
6.1	Documentation and IC	• Review of Internal Test Reports • IC issuance	100%	Supplier's Test Records / Inspection Certificate	-	H	H
6.2	Final Document submission	Compilation of Inspection reports ,drawings, etc as per VDR / PR	100%	Final data folder /Completeness certificate	-	H	H

Legends: H- Hold (Do not proceed without approval), Random -10%, R-Review,RW-Random witness, TC, W- Witness (Give due notice, work may proceed after scheduled date).

NOTES:

1. ~~All NACE, Hydrogen service, AS, SS flanges to be inspected by TPIA appointed by the Main Supplier. CS flanges upto size 24" – 300 ANSI will be accepted on review of Supplier Test Certificates. Supplier test certificate to be reviewed by TPIA~~.
2. This document describes the generic test requirements. Any additional test or inspection scope if specified in contract documents shall also be applicable. (Unless otherwise agreed upon).
3. Acceptance Norms for all the activities shall be as per PO/PR/ Standards referred there in/ Job specifications /Approved documents

Copyright EIL – All rights reserved

TC65436-R01
Page 15970 of 18388

सीमलैस पाइपों के लिये
निरीक्षण एवं परीक्षण योजना

INSPECTION AND TEST PLAN
FOR
SEAMLESS PIPES

Rev. No.	Date	Purpose	Prepared By	Checked By	Standards Committee Convenor	Standards Bureau Chairman
5.	19.09..2016	REVISED AND RE-ISSUED	TKK	HP	RKS	RN
4.	17.06..2013	REVISED AND RE-ISSUED	TKK	RKS	SCG	DM
3	15.07.2011	REVISED AND RE-ISSUED	TKK	SCG	AKC	DM
2	30.06.2010	REVISED AND RE-ISSUED	RK	VKJ	SKP	ND
1	28.09.2007	REVISED AND RE-ISSUED	PD	RB	MVKK	VC
						Approved by

Copyright EIL – All rights reserved

Abbreviations:

CEIL	:	Certification Engineers International Limited	MRT	:	Mechanical Run Test
CIMFR	:	Central Institute of Mining & Fuel Research	NDT	:	Non Destructive Testing
CE	:	Carbon Equivalent	NPSH	:	Net Positive Suction Head
DFT	:	Dry Film Thickness	PO	:	Purchase Order
DPT	:	Dye Penetrant Testing	PESO	:	Petroleum Explosive Safety Organization
DHT	:	De-hydrogen Heat Treatment	PQR	:	Procedure Qualification Record
ERTL	:	Electronics Regional Test Laboratory	PR	:	Purchase Requisition
FCRI	:	Fluid Control Research Institute	PMI	:	Positive Material Identification
HT	:	Heat Treatment	RT	:	Radiography Testing
HIC	:	Hydrogen Induced Cracking	SSCC	:	Sulphide Stress Corrosion Cracking
ITP	:	Inspection and Test Plan	TC	:	Test Certificate
IP	:	Ingress Protection	TPI or TPIA	:	Third Party Inspection Agency
IHT	:	Intermediate Heat Treatment	UT	:	Ultrasonic Testing
IC	:	Inspection Certificate	VDR	:	Vendor Data Requirement
IGC	:	Inter Granular Corrosion	WPS	:	Welding Procedure Specification
MPT/MT	:	Magnetic Particle Testing	WPQ	:	Welders Performance Qualification
MTC	:	Material Test Certificate			

Inspection Standards Committee

Convenor : Mr. R.K. Singh

Members: Mr. Rajeev Kumar, Mr. Himangshu Pal, Mr. Neeraj Mathur, Mr. T Kamalakannan, Mr. Mahendra Mittal, Mr. Deepak Gupta (Project)

Copyright EIL – All rights reserved

1.0 SCOPE

This Inspection and Test Plan covers the minimum testing requirements of Seamless Pipes.

2.0 REFERENCE DOCUMENTS

PO/PR/Standards referred therein/ Job specifications /Approved documents.

3.0 INSPECTION AND TEST REQUIREMENTS

SL. NO.	STAGE/ACTIVITY	CHARACTERISTICS	QUANTUM OF CHECK	RECORD	SCOPE OF INSPECTION		
					SUB SUPPLIER	SUPPLIER	EIL/ TPIA
1.0	**Procedure**						
1.1	Hydrostatic Test, Heat Treatment, NDT and Other Procedures	Documented Procedures	100%	Procedure Documents	-	H	R
2.0	**Material Inspection**						
2.1	Raw Material Inspection	Review of MTC for Chemical, Mechanical Properties, size & steel making process, etc.	100%	Test Certificates	-	H	R
3.0	**In Process Inspection**						

Copyright EIL – All rights reserved

SL. NO.	STAGE/ACTIVITY	CHARACTERISTICS	QUANTUM OF CHECK	RECORD	SCOPE OF INSPECTION		
					SUB SUPPLIER	SUPPLIER	EIL/ TPIA
3.1	Heat Treatment	Normalizing, Tempering, Solution Annealing, Stabilization Heat Treatment etc. as applicable	100%	HT chart	-	H	R
3.2	NDT As applicable	Surface & Internal Imperfections	PR / Purchase Specification	NDT Reports	-	H	R
3.3	Identification of Test Samples	Product Chemical, Tensile, Hardness, Impact, IGC and Other test as applicable	Lot as per specification	Test Reports	-	H	H (Note-1)
3.4	Product Analysis	Chemical Composition	Lot as per specification	Test Reports	-	H	R
3.5	Destructive Testing	Tensile, Hardness, Impact, IGC and Other test as applicable	Lot as per specification	Test Reports	-	H	H (Note-1)
3.6	Galvanizing (If Applicable)	Integrity Of Galvanised Coating	100%	Inspection Report	-	H	R
4.0	**Final Inspection**						
4.1	Hydrostatic Testing	Leak Check	100%	Test Report	-	H	RW (Note 1)

Copyright EIL – All rights reserved

SL. NO.	STAGE/ACTIVITY	CHARACTERISTICS	QUANTUM OF CHECK	RECORD	SCOPE OF INSPECTION		
					SUB SUPPLIER	SUPPLIER	EIL/ TPIA
4.2	Visual and Dimensional Inspection (VDI)	Surface Condition, Straightness, End Finish, Bevel Angle, Root Face, Outer Dia., Thickness, Length, End Finish, Marking, End Caps etc	100%	Inspection Report	-	H	RW (Note 1)
4.3	Weight Checking as applicable	Weight	100% By Supplier	Inspection Report	-	H	-
4.4	PMI Check	Chemical Check	As Per EIL Spec. 6-81-0001	Inspection report	-	H	RW
4.5	Final Stamping	Stamping of Accepted Pipes	Stamping of Pipes which are witnessed by EIL/TPIA..Other pipes to have suppliers identification	Inspection Report	-	H	H

Copyright EIL – All rights reserved

SL. NO.	STAGE/ACTIVITY	CHARACTERISTICS	QUANTUM OF CHECK	RECORD	SCOPE OF INSPECTION		
					SUB SUPPLIER	SUPPLIER	EIL/ TPIA
5.0	**Painting**						
5.1	Rust Preventive Coating & Color Coding (As applicable)	Visual & Color Coding as applicable	100%	Inspection Report	-	W	-
6.0	**Documentation & IC**						
6.1	Documentation & Inspection Certificate(IC)	Review of Stage Inspection Reports / Test Reports & Issue of IC	100%	Supplier TC & IC	-	H	H

Legend: H- Hold (Do not proceed without approval), P-Perform, RW - Random Witness (As specified or 10% (min.1 no. of each size and type of Bulk item)), R-Review, W-Witness (Give due notice, work may proceed after scheduled date).

NOTES (As applicable):

1. Carbon Steel Pipes (Other than LTCS & Pipes for special services like NACE, H2, HIC, etc.) up to size 12" will be accepted on review of Supplier Test Certificates. Supplier Test Certificate to be reviewed by EIL/TPIA.
2. This document describes the generic test requirements. Any additional test or Inspection scope if specified in contract documents shall also be applicable.(Unless otherwise agreed upon)
3. Acceptance Norms for all the activities shall be as per PO/PR/STANDARDS referred there in /Job Specification /Approved Documents.
4. For orders placed on stockist, items shall be accepted based on manufacturer's TC with EN10204 type 3.2 certification from EIL approved suppliers.

Copyright EIL – All rights reserved

वाल्वों के लिये
निरीक्षण व परीक्षण योजना

INSPECTION AND TEST PLAN
FOR
VALVES

Rev No	Date	Purpose	Prepared by	Checked by	Standards Committee Convenor	Standards Bureau Chairman
					Approved by	
6	14 11 2018	REVISED AND RE-ISSUED	KC	NM	RKS	RKT
5	17 06 2013	REVISED AND RE-ISSUED	TKK	RKS	SCG	DM
4	15 07 2011	REVISED AND RE-ISSUED	TKK	SCG	AKC	DM
3	30 06 2010	REVISED AND RE-ISSUED	RKB	VKJ	SKP	ND
2	31 01 2008	REVISED AND RE-ISSUED	CS	SS	MVKK	VC

Copyright EIL – All rights reserved

Abbreviations:

CEIL	:	Certification Engineers International Limited	MRT	:	Mechanical Run Test
CIMFR	:	Central Institute of Mining & Fuel Research	NDT	:	Non Destructive Testing
CE	:	Carbon Equivalent	NPSH		Net Positive Suction Head
DFT	:	Dry Film Thickness	PO	:	Purchase Order
DPT	:	Dye Penetrant Testing	PESO	:	Petroleum Explosive Safety Organization
DHT	:	De-hydrogen Heat Treatment	PQR	:	Procedure Qualification Record
ERTL	:	Electronics Regional Test Laboratory	PR	:	Purchase Requisition
FCRI	:	Fluid Control Research Institute	PMI	:	Positive Material Identification
HT	:	Heat Treatment	RT	:	Radiography Testing
HIC	:	Hydrogen Induced Cracking	SSCC	:	Sulphide Stress Corrosion Cracking
ITP	:	Inspection and Test Plan	TC	:	Test Certificate
IP	:	Ingress Protection	TPI or TPIA	:	Third Party Inspection Agency
IHT	:	Intermediate Heat Treatment	UT	:	Ultrasonic Testing
IC	:	Inspection Certificate	VDR	:	Vendor Data Requirement
IGC	:	Inter Granular Corrosion	WPS	:	Welding Procedure Specification
MPT/MT	:	Magnetic Particle Testing	WPQ	:	Welders Performance Qualification
MTC	:	Material Test Certificate			

Inspection Standards Committee

Convenor : Mr. R K. Singh

Members:

Mr. Rajeev Kumar
Mr. T Kamalakannan
Mr. Neeraj Mathur
Mr. Mahendra Mittal
Mr. Himangshu Pal
Mr Deepak Gupta (Projects)
Mr R Muthu Ramalingam (RPO Rep.)

Copyright EIL – All rights reserved

1.0 SCOPE

This Inspection and Test Plan covers the minimum testing requirements of Valves.

2.0 REFERENCE DOCUMENTS

PO/PR/Standards referred therein/ Job specifications /Approved documents.

3.0 INSPECTION AND TEST REQUIREMENTS

SL NO	STAGE / ACTIVITY	CHARACTERISTICS	QUANTUM OF CHECK	RECORD	SCOPE OF INSPECTION		
					SUB SUPPLIER	SUPPLIER	EIL/TPIA
1.0	**Procedure**						
1.1	Hydrostatic Test, Heat Treatment, NDT, Helium Leak Test and Other Procedures	Documented Procedures	100%	Procedure Documents	-	H	R
1.2	WPS, PQR & WPQ	Welding Parameters & Qualification Record	100%	WPS, PQR &WPQ	-	H	W- New R- Existing
1.3	Pre-Qualification Tests	Fire safe, Cryogenic & Other Test as applicable	As per PR / Purchase Specification	Acceptance Report	-	H	H (If new)

Copyright EIL – All rights reserved

SL NO	STAGE / ACTIVITY	CHARACTERISTICS	QUANTUM OF CHECK	RECORD	SCOPE OF INSPECTION		
					SUB SUPPLIER	SUPPLIER	EIL/TPIA
2.0	**Material Inspection**						
2.1	Castings & Forgings (Body, Bonnet, Disc, Stem, Body ring)	Chemical, Mechanical, Heat Treatment, NDT, IGC & Other Properties as applicable	100%	Test Certificates	H	R	R
2.2	Castings & Forgings (Body, Bonnet, Disc, Stem, Body ring)	Visual & Dimension	100%	Inspection Report	H	H	-
2.3	Body and Bonnet Castings	Radiography Examination	As per PR / Purchase Specification	Films and report	H	R	R
2.4	Bars for Trim material	Chemical Analysis	Each Heat	Test Certificates & Lab Report	H	R	-
2.5	Gaskets, Gear units, Fasteners, Gland, Packings, etc.	Physical / Chemical Properties	100%	Test Certificates & Lab Report	H	R	-
2.6	Actuators as applicable	Performance, Statutory Certificates as applicable	100%	Test Certificates, Inspection report	H	H	R

Copyright EIL – All rights reserved

SL NO	STAGE / ACTIVITY	CHARACTERISTICS	QUANTUM OF CHECK	RECORD	SCOPE OF INSPECTION		
					SUB SUPPLIER	SUPPLIER	EIL/TPIA
3.0	**In Process Inspection**						
3.1	Welding	Welding Parameters as per WPS / PQR	100%	Inspection Reports	-	H	-
3.2	Machining of components	Visual / Dimension	100%	Inspection Reports	-	H	-
4.0	**Final Inspection**						
4.1	Hydrostatic / Pneumatic Test and Helium Leak test as applicable	Leak Check	As per PR / Purchase Specification	Test Report	-	H	RW (Note 1)
4.2	Visual / Dimension	Surface & Dimension Check	100%	Test Report	-	H	RW (Note 1)
4.3	Functional Test for Actuator Operated Valves	Satisfactory Performance	100%	Test Report	-	H	RW

Copyright EIL – All rights reserved

SL NO	STAGE / ACTIVITY	CHARACTERISTICS	QUANTUM OF CHECK	RECORD	SCOPE OF INSPECTION		
					SUB SUPPLIER	SUPPLIER	EIL/TPIA
4.4	PMI Check	Chemical	As per EIL Spec. 6-81-0001	Inspection Report	-	H	RW
4.5	Strip Check (As applicable)	Verify Components & Differential hardness if applicable	As per PR / Purchase Specification	Inspection Report	-	H	RW (Note-1)
4.6	Final Stamping	Stamping of Accepted Valves	Stamping of Valves which are witnessed by EIL/TPIA.	Inspection Report	-	H	H (Note-1)
5.0	**Painting**						
5.1	Painting and Color coding as applicable	Visual / DFT Check	100%	Inspection Report	-	H	-
6.0	**Documentation & IC**						
6.1	Documentation & Inspection Certificate (IC)	Review of Stage Inspection Reports / Test Reports & Issue of IC	100%	Supplier TC & IC	-	H	H

Copyright EIL – All rights reserved

Legend: H- Hold (Do not proceed without approval), P-Perform, RW - Random Witness (As specified or 10% (min.1 no. of each size and type of Bulk item)), R-Review, W-Witness (Give due notice, work may proceed after scheduled date).

NOTES (As applicable):

1. Non NACE & Non Hydrogen service Carbon Steel Cast Valves up to size 12"-300ANSI Class and Carbon Steel Forged Valves up to size 1.5"- 800 ANSI Class will be accepted on review of Supplier Test Certificates. Supplier Test Certificate along with back up reports to be reviewed by EIL/TPIA
2. This document describes the generic test requirements. Any additional test or Inspection scope if specified in contract documents shall also be applicable. (Unless otherwise agreed upon)
3. Acceptance Norms for all the activities shall be as per PO/PR/STANDARDS referred therein /Job Specification /Approved Documents.

Copyright EIL – All rights reserved

फोर्ज्ड, सीमलेस एंड वैल्डेड फिटिंगों के लिये निरीक्षण व परीक्षण योजना

INSPECTION AND TEST PLAN FOR FORGED, SEAMLESS & WELDED FITTINGS

Rev. No.	Date	Purpose	Prepared by	Checked by	Standards Committee Convenor	Standards Bureau Chairman
					Approved by	
7	14 11 2018	REVISED AND RE-ISSUED	KC	NM	RKS	RKT
6	19 09 2016	REVISED AND RE-ISSUED	TKK	HP	RKS	DM
5	17 06 2013	REVISED AND RE-ISSUED	TKK	RKS	SCG	DM
4	15 07 2011	REVISED AND RE-ISSUED	TKK	SCG	AKC	DM
3	30 06 2010	REVISED AND RE-ISSUED	RKB	VKJ	SKP	ND
2	31 01 2008	REVISED AND RE-ISSUED	CS	SS	MVKK	VC

Copyright EIL – All rights reserved

Abbreviations:

CEIL	:	Certification Engineers International Limited	MRT	:	Mechanical Run Test
CIMFR	:	Central Institute of Mining & Fuel Research	NDT	:	Non Destructive Testing
CE	:	Carbon Equivalent	NPSH	:	Net Positive Suction Head
DFT	:	Dry Film Thickness	PO	:	Purchase Order
DPT	:	Dye Penetrant Testing	PESO	:	Petroleum Explosive Safety Organization
DHT	:	De-hydrogen Heat Treatment	PQR	:	Procedure Qualification Record
ERTL	:	Electronics Regional Test Laboratory	PR	:	Purchase Requisition
FCRI	:	Fluid Control Research Institute	PMI	:	Positive Material Identification
HT	:	Heat Treatment	RT	:	Radiography Testing
HIC	:	Hydrogen Induced Cracking	SSCC	:	Sulphide Stress Corrosion Cracking
ITP	:	Inspection and Test Plan	TC	:	Test Certificate
IP	:	Ingress Protection	TPI or TPIA	:	Third Party Inspection Agency
IHT	:	Intermediate Heat Treatment	UT	:	Ultrasonic Testing
IC	:	Inspection Certificate	VDR	:	Vendor Data Requirement
IGC	:	Inter Granular Corrosion	WPS	:	Welding Procedure Specification
MPT/MT		Magnetic Particle Testing	WPQ	:	Welders Performance Qualification
MTC	:	Material Test Certificate			

Inspection Standards Committee

Convenor : Mr. R.K. Singh

Members:

Mr. Rajeev Kumar	Mr Neeraj Mathur	Mr. Himangshu Pal	Mr. R Muthu Ramalingam (RPO Rep.)
Mr. T Kamalakannan	Mr. Mahendra Mittal	Mr Deepak Gupta (Projects)	

Copyright EIL – All rights reserved

1.0 SCOPE

This Inspection and Test Plan covers the minimum testing requirements of Forged, Seamless & Welded Fittings.

2.0 REFERENCE DOCUMENTS

PO/PR/Standards referred therein/ Job specifications /Approved documents.

3.0 INSPECTION AND TEST REQUIREMENTS

SL NO.	STAGE / ACTIVITY	CHARACTERISTICS	QUANTUM OF CHECK	RECORD	SCOPE OF INSPECTION		
					SUB SUPPLIER	SUPPLIER	EIL/TPIA
1.0	**Procedure**						
1.1	Heat Treatment / NDT	Documented Procedures	100%	Procedure Documents	-	H	R
1.2	WPS, PQR & WPQ	Welding Parameters & Qualification	100%	WPS, PQR & WPQ	-	H	W- New R- Existing
2.0	**Material Inspection**						
2 1	Raw Material Identification (Billets, Rounds, Pipes, Coil, Plates, etc.) (* Special services like NACE, H2,UOP, AXEN etc)	Chemical and Mechanical Properties, Size & Steel making practice etc	100%	Mill test certificate, Supplier's Inspection Report	-	H	W* /R

Copyright EIL – All rights reserved

SL NO.	STAGE / ACTIVITY	CHARACTERISTICS	QUANTUM OF CHECK	RECORD	SCOPE OF INSPECTION		
					SUB SUPPLIER	SUPPLIER	EIL/TPIA
3.0	**In Process Inspection**						
3.1	Forming & Welding	Forming & Welding Parameters	100%	Supplier's records	-	H	-
3.2	Ferrite Check Of SS Welds (If Applicable)	% Ferrite Check	100%	Inspection Report	-	H	R
3.3	Heat Treatment	Stress Reliving, Normalising, Tempering, Solution Annealing, Stabilization Heat Treatment etc. as applicable	100%	HT chart / Report	-	H	R
3.4	NDT-RT As Applicable	Surface & Internal Imperfections	As per PR/Purchase Specification	RT Films & Reports	-	H	R (Fim Review)
3.5	NDT – UT (as applicable)	Surface & Internal Imperfections	As per PR/Purchase Specification	UT Report	-	H	R
3.6	NDT – DPT/MPT on Bevel Ends (as applicable)	Surface & Internal Imperfections	100%	Test Report	-	H	RW
3.7	Identification of Test Samples	Product Chemical, Mechanical, Impact, IGC and Other test as applicable	As per specifications	Test Reports	-	H	H

Copyright EIL – All rights reserved

SL NO.	STAGE / ACTIVITY	CHARACTERISTICS	QUANTUM OF CHECK	RECORD	SCOPE OF INSPECTION		
					SUB SUPPLIER	SUPPLIER	EIL/TPIA
3.8	Product Analysis	Chemical Composition	As per PR/Purchase Specification	Test Reports	-	H	R
3.9	Destructive Testing	Mechanical, Impact, IGC and Other test as applicable	100%	Test Reports	-	H	H
3.10	Galvanizing (If Applicable)	Integrity of Galvanised Coating	100%	Inspection Report	-	H	R
4.0	**Final Inspection**						
4.1	Visual and Dimension	Size, Thickness / Schedule, Dimensions, Surface quality, Marking, etc.	100%	Inspection Report	-	H	RW (Note-1)
4.2	Hardness testing on Fittings (*Special services like NACE, H2, HIC, UOP, AXEN etc)	Hardness value of Base metal & Wels/HAZ as applicable	Random 10%	Test Report	-	H	R- For CS/SS & RW for AS, LTCS, CS with special services.
4.3	PMI Check	Chemical Check	As Per EIL Spec. 6-81-0001	Inspection report	-	H	RW

Copyright EIL – All rights reserved

SL NO.	STAGE / ACTIVITY	CHARACTERISTICS	QUANTUM OF CHECK	RECORD	SCOPE OF INSPECTION		
					SUB SUPPLIER	SUPPLIER	EIL/TPIA
4.4	Final Stamping	Stamping of Accepted Fittings	Stamping of Fittings which are witnessed by EIL/TPIA.	Inspection Report	-	H	H (Note-1)
5.0	**Painting**						
5.1	Rust Preventive Coating & Color Coding	Visual & Color Coding as applicable	100%	Inspection Report	-	W	-
6.0	**Documentation & IC**						
6.1	Documentation & Inspection Certificate (IC)	Review of Stage Inspection Reports / Test Reports & Issue of IC	100%	Supplier TC & IC	-	H	H

Legend: H- Hold (Do not proceed without approval), P-Perform, RW - Random Witness (As specified or 10% (min.1 no. of each size and type of Bulk item)), R-Review, W-Witness (Give due notice, work may proceed after scheduled date)

NOTES (As applicable):

1. This document describes the generic test requirements. Any additional test or Inspection scope if specified in contract documents shall also be applicable. (unless otherwise agreed upon)
2. Acceptance Norms for all the activities shall be as per PO/PR/STANDARDS referred therein /Job Specification /Approved Documents.
3. For orders placed on stockiest, items shall be accepted based on manufacturer's TC with EN10204 type 3.2 certification from EIL approved suppliers.
4. For welded fittings, it is recommended to use low hydrogen consumable for AS, SS410 fittings and HIC resistant consumable for HIC service fittings.
5. EIL/TPIA reserves the right to check raw material consumption and traceability records.

Copyright EIL – All rights reserved

फ्लैंजों, स्पैक्टेकल ब्लांइडों एवं ड्रिप रिंगों के लिये निरीक्षण व परीक्षण योजना

INSPECTION AND TEST PLAN FOR FLANGES, SPECTACLE BLINDS & DRIP RINGS

Rev. No	Date	Purpose	Prepared by	Checked by	Standards Committee Convenor	Standards Bureau Chairman
					Approved by	
5	14 11 2018	REVISED AND RE-ISSUED	KC	NM	RKS	RKT
4	17 06 2013	REVISED AND RE-ISSUED	TKK	RKS	SCG	DM
3	15 07 2011	REVISED AND RE-ISSUED	TKK	SCG	AKC	DM
2	30 06 2010	REVISED AND RE-ISSUED	RKB	VKJ	SKP	ND
1	28 09 2007	REVISED AND RE-ISSUED	PD	RB	MVKK	VC

Copyright EIL – All rights reserved

Abbreviations:

CEIL	:	Certification Engineers International Limited	MRT	:	Mechanical Run Test
CIMFR	:	Central Institute of Mining & Fuel Research	NDT	:	Non Destructive Testing
CE	:	Carbon Equivalent	NPSH	:	Net Positive Suction Head
DFT	:	Dry Film Thickness	PO	:	Purchase Order
DPT	:	Dye Penetrant Testing	PESO	:	Petroleum Explosive Safety Organization
DHT	:	De-hydrogen Heat Treatment	PQR	:	Procedure Qualification Record
ERTL	:	Electronics Regional Test Laboratory	PR	:	Purchase Requisition
FCRI	:	Fluid Control Research Institute	PMI	:	Positive Material Identification
HT	:	Heat Treatment	RT	:	Radiography Testing
HIC	:	Hydrogen Induced Cracking	SSCC	:	Sulphide Stress Corrosion Cracking
ITP	:	Inspection and Test Plan	TC	:	Test Certificate
IP	:	Ingress Protection	TPI or TPIA	:	Third Party Inspection Agency
IHT	:	Intermediate Heat Treatment	UT	:	Ultrasonic Testing
IC	:	Inspection Certificate	VDR	:	Vendor Data Requirement
IGC	:	Inter Granular Corrosion	WPS	:	Welding Procedure Specification
MPT/MT	:	Magnetic Particle Testing	WPQ	:	Welders Performance Qualification
MTC	:	Material Test Certificate			

Inspection Standards Committee

Convenor · Mr. R.K. Singh

Members:

Mr. Rajeev Kumar
Mr T Kamalakannan
Mr. Neeraj Mathur
Mr. Mahendra Mittal
Mr. Himangshu Pal
Mr Deepak Gupta (Projects)
Mr R Muthu Ramalingam (RPO Rep)

Copyright EIL – All rights reserved

1.0 SCOPE

This Inspection and Test Plan covers the minimum testing requirements of Flanges, Spectacle Blinds & Drip Rings.

2.0 REFERENCE DOCUMENTS

PO/PR/Standards referred therein/ Job specifications /Approved documents.

3.0 INSPECTION AND TEST REQUIREMENTS

SL NO.	STAGE / ACTIVITY	CHARACTERISTICS	QUANTUM OF CHECK	RECORD	SCOPE OF INSPECTION		
					SUB SUPPLIER	SUPPLIER	EIL/TPIA
1.0	**Procedure**						
1.1	Heat Treatment, NDT and Other Procedures	Documented Procedures	100%	Procedure Documents	-	H	R
1.2	WPS, PQR & WPQ	Welding Parameters & Qualification Record	100%	WPS, PQR & WPQ	-	H	W- New R- Existing
2.0	**Material Inspection**						
2.1	Raw Material Inspection	Chemical & Mechanical Properties	100%	Test Certificates	-	H	R

Copyright EIL – All rights reserved

SL NO.	STAGE / ACTIVITY	CHARACTERISTICS	QUANTUM OF CHECK	RECORD	SCOPE OF INSPECTION		
					SUB SUPPLIER	SUPPLIER	EIL/TPIA
3.0	**In Process Inspection**						
3.1	Welding / Forging	Forging /Welding Parameters	100%	Inspection Reports	-	H	-
3.2	Heat Treatment	Stress Relieving, Normalising, Tempering, Solution Annealing, Stabilization Heat Treatment etc. as applicable	100%	HT chart	-	H	R
3 3	Identification of Test Samples	Product Chemical, Mechanical, Impact, IGC and Other test as applicable	100%	Test Reports	-	H	H (Note-1)
3.4	Product Analysis (As applicable)	Chemical Composition	As per PR/Purchase Specification	Test Reports	-	H	R
3.5	Destructive Testing	Mechanical, Impact, IGC and Other test as applicable	100%	Test Reports	-	H	H (Note-1)
3 6	NDT as applicable	Surface & Internal Imperfections	As per PR/Purchase Specification	NDT Reports	-	H	R

Copyright EIL – All rights reserved

SL NO.	STAGE / ACTIVITY	CHARACTERISTICS	QUANTUM OF CHECK	RECORD	SCOPE OF INSPECTION		
					SUB SUPPLIER	SUPPLIER	EIL/TPIA
3.7	Galvanizing (If Applicable)	Integrity of Galvanised Coating	100%	Inspection Report	-	H	R
4.0	**Final Inspection**						
4.1	Final Inspection	1. Visual 2 Dimensions 3. Hardness 4. Marking etc	100%	Inspection Report	-	H	H (Note-1)
4.2	PMI Check	Chemical Check	As Per EIL Spec. 6-81-0001	Inspection report	-	H	RW
4.3	Final Stamping	Stamping of Accepted Items	Stamping of Items which are witnessed by EIL/TPIA.	Inspection Report	-	H	H (Note – 1)
5.0	**Painting**						
5.1	Rust Preventive Coating & Color Coding	Visual & Color Coding as applicable	100%	Inspection Report	-	H	-

Copyright EIL – All rights reserved

SL NO.	STAGE / ACTIVITY	CHARACTERISTICS	QUANTUM OF CHECK	RECORD	SCOPE OF INSPECTION		
					SUB SUPPLIER	SUPPLIER	EIL/TPIA
6.0	**Documentation & IC**						
6.1	Documentation & Inspection Certificate (IC)	Review of Stage Inspection Reports / Test Reports & Issue of IC	100%	Supplier TC & IC	-	H	H

Legend: H- Hold (Do not proceed without approval), P-Perform, RW - Random Witness (As specified or 10% (min.1 no. of each size and type of Bulk item)), R-Review, W-Witness (Give due notice, work may proceed after scheduled date).

NOTES (As applicable):

1. Non NACE & Non Hydrogen service Carbon Steel Flanges, Spectacle Blinds & Drip Rings up to size 24"-300ANSI Class Will be accepted on review of Supplier Test Certificates. Supplier Test Certificate along with back up reports to be reviewed by EIL/TPIA
2. This document describes the generic test requirements. Any additional test or Inspection scope if specified in contract documents shall also be applicable. (unless otherwise agreed upon)
3. Acceptance Norms for all the activities shall be as per PO/PR/STANDARDS referred therein /Job Specification /Approved Documents.

Copyright EIL – All rights reserved

बोल्टिंग मैटीरियल के लिये निरीक्षण व परीक्षण योजना

INSPECTION AND TEST PLAN FOR BOLTING MATERIAL

Rev. No.	Date	Purpose	Prepared by	Checked by	Convenor Standards Committee	Chairman Standards Bureau
					Approved by	
4	19.09.2016	REVISED AND RE-ISSUED	TKK	HP	RKS	RN
3	17.06.2013	REVISED AND RE-ISSUED	TKK	RKS	SCG	DM
2	15.07.2011	REVISED AND RE-ISSUED	TKK	SCG	AKC	DM
1	28.09.2007	REVISED AND RE-ISSUED	PD	RB	MVKK	VC
0	23.04.02	ISSUED FOR IMPLEMENTATION	NKN	SPS	AKB	SB

Copyright EIL – All rights reserved

Abbreviations:

CEIL	:	Certification Engineers International Limited	MRT	:	Mechanical Run Test
CIMFR	:	Central Institute of Mining & Fuel Research	NDT	:	Non Destructive Testing
CE	:	Carbon Equivalent	NPSH	:	Net Positive Suction Head
DFT	:	Dry Film Thickness	PO	:	Purchase Order
DPT	:	Dye Penetrant Testing	PESO	:	Petroleum Explosive Safety Organization
DHT	:	De-hydrogen Heat Treatment	PQR	:	Procedure Qualification Record
ERTL	:	Electronics Regional Test Laboratory	PR	:	Purchase Requisition
FCRI	:	Fluid Control Research Institute	PMI	:	Positive Material Identification
HT	:	Heat Treatment	RT	:	Radiography Testing
HIC	:	Hydrogen Induced Cracking	SSCC	:	Sulphide Stress Corrosion Cracking
ITP	:	Inspection and Test Plan	TC	:	Test Certificate
IP	:	Ingress Protection	TPI or TPIA	:	Third Party Inspection Agency
IHT	:	Intermediate Heat Treatment	UT	:	Ultrasonic Testing
IC	:	Inspection Certificate	VDR	:	Vendor Data Requirement
IGC	:	Inter Granular Corrosion	WPS	:	Welding Procedure Specification
MPT/MT	:	Magnetic Particle Testing	WPQ	:	Welders Performance Qualification
MTC	:	Material Test Certificate			

Inspection Standards Committee

Convenor : Mr. R.K. Singh

Members:

Mr. Rajeev Kumar	Mr. Himangshu Pal	Mr. Neeraj Mathur
Mr. T Kamalakannan	Mr. Mahendra Mittal	Mr. Deepak Gupta (Project)

Copyright EIL – All rights reserved

1.0 SCOPE:

This Inspection and Test Plan covers the minimum testing requirements of Bolting Material.

2.0 REFERENCE DOCUMENTS:

PO/PR/ Standards referred there in/ Job specifications /Approved documents.

3.0 INSPECTION AND TEST REQUIREMENTS:

SL NO.	STAGE/ ACTIVITY	CHARACTERISTICS	QUANTUM OF CHECK	RECORD	SCOPE OF INSPECTION		
					SUB SUPPLIER	SUPPLIER	EIL/TPIA
1.0	**Procedure**						
1.1	Heat Treatment & NDT Procedures	Documented Procedures	100%	Procedure Documents	-	H	R
2.0	**Material Inspection**						
2.1	Raw Material Inspection	Chemical, Steel making process, Macro Etch , etc.	100%	Test Certificates	H	H	R
3.0	**In Process Inspection**						
3.1	Thread Rolling, Hot forging of Nuts/Bolt Heads, Machining	Process Parameters	100%	Inspection Report	-	H	-

Copyright EIL – All rights reserved

SL NO.	STAGE/ ACTIVITY	CHARACTERISTICS	QUANTUM OF CHECK	RECORD	SCOPE OF INSPECTION		
					SUB SUPPLIER	SUPPLIER	EIL/TPIA
3.2	Heat Treatment	Normalising & Tempering, Quenching & Tempering Solution Annealing, Stabilization Heat Treatment, Strain Hardening, Nitriding etc. as applicable	100%	Inspection Report	-	H	R
3.3	NDT (as applicable)	Defects detection	100%	Test Reports	-	H	R
3.4	Identification of Test Samples	Product Chemical, Proof Load Test , Stress Rupture, Tensile, Hardness, Impact, and Other test as applicable	Lot as per specification.	Test Reports	-	H	W
3.5	Destructive Testing	Product Chemical, Proof Load Test , Stress Rupture, Mechanical, Impact and Other test as applicable	Lot as per specification.	Test Reports	-	H	W
3.6	Galvanizing (If Applicable)	Integrity Of Galvanised Coating	100%	Inspection Report	-	H	R
4.0	**Final Inspection**						

Copyright EIL – All rights reserved

SL NO.	STAGE/ ACTIVITY	CHARACTERISTICS	QUANTUM OF CHECK	RECORD	SCOPE OF INSPECTION		
					SUB SUPPLIER	SUPPLIER	EIL/TPIA
4.1	Visual & Dimension	Visual Marking & Dimensions	100% by supplier & Random by EIL / TPIA	Inspection Report	-	H	RW (Note-3)
4.2	Final Stamping	Stamping of Accepted Bolting Material	Stamping of bolting material which are witnessed by EIL/TPIA. Others to have suppliers identification.	Inspection Report	-	H	W
4.3	PMI Check	Chemical Check	As Per EIL Spec. 6-81-0001	Inspection report	-	H	W
5.0	**Painting**						
5.1	Rust Preventive & Color Coding (as applicable)	Visual & Color Coding as applicable	100%	Inspection Report	-	H	-
6.0	**Documentation & IC**						

Copyright EIL – All rights reserved

SL NO.	STAGE/ ACTIVITY	CHARACTERISTICS	QUANTUM OF CHECK	RECORD	SCOPE OF INSPECTION		
					SUB SUPPLIER	SUPPLIER	EIL/TPIA
6.1	Documentation & Inspection Certificate(IC)	Review of Stage Inspection Reports / Test Reports & Issue of IC	100%	Supplier TC & IC	-	H	H

Legend: H- Hold (Do not proceed without approval), P-Perform, RW - Random Witness {As specified or 10% Max. (min.1 no. of each size and type of Bulk item)}, R-Review, W-Witness (Give due notice, work may proceed after scheduled date).

Notes (as applicable):

1. This document describes the generic test requirements. Any additional test or Inspection scope if specified in contract documents shall also be applicable.(unless otherwise agreed upon)
2. Acceptance Norms for all the activities shall be as per PO/PR/STANDARDS referred there in /Job Specification /Approved Documents.
3. Final visual and dimension shall be checked as per below sampling plan:

Lot Size (Nos.)	Sample Size (Minimum)
Upto 100	2% (Min. 2 Nos.)
101 to 500	1% (Min. 3 Nos.)
501 and above	0.5% (Min.5Nos.)

Copyright EIL – All rights reserved

गास्केटस के लिये
निरीक्षण व परीक्षण योजना

INSPECTION AND TEST PLAN
FOR
GASKETS

Rev. No	Date	Purpose	Prepared By	Checked By	Standards Committee Convenor	Standards Bureau Chairman
					Approved by	
4	14 11 2018	REVISED AND RE-ISSUED	KC	NM	RKS	RKT
3	17 06 2013	REVISED AND RE-ISSUED	TKK	RKS	SCG	DM
2	15 07 2011	REVISED AND RE-ISSUED	TKK	SCG	AKC	DM
1	02 01 2008	REVISED AND RE-ISSUED	AM	SS	MVKK	VC

Copyright EIL – All rights reserved

Abbreviations:

CEIL	:	Certification Engineers International Limited	MRT	:	Mechanical Run Test
CIMFR	:	Central Institute of Mining & Fuel Research	NDT	:	Non Destructive Testing
CE	:	Carbon Equivalent	NPSH	:	Net Positive Suction Head
DFT	:	Dry Film Thickness	PO	:	Purchase Order
DPT	:	Dye Penetrant Testing	PESO	:	Petroleum Explosive Safety Organization
DHT	:	De-hydrogen Heat Treatment	PQR	:	Procedure Qualification Record
ERTL	:	Electronics Regional Test Laboratory	PR	:	Purchase Requisition
FCRI	:	Fluid Control Research Institute	PMI	:	Positive Material Identification
HT	:	Heat Treatment	RT	:	Radiography Testing
HIC	:	Hydrogen Induced Cracking	SSCC	:	Sulphide Stress Corrosion Cracking
ITP	:	Inspection and Test Plan	TC	:	Test Certificate
IP	:	Ingress Protection	TPI or TPIA	:	Third Party Inspection Agency
IHT	:	Intermediate Heat Treatment	UT	:	Ultrasonic Testing
IC	:	Inspection Certificate	VDR	:	Vendor Data Requirement
IGC	:	Inter Granular Corrosion	WPS	:	Welding Procedure Specification
MPT/MT	:	Magnetic Particle Testing	WPQ	:	Welders Performance Qualification
MTC	:	Material Test Certificate			

Inspection Standards Committee

Convenor : Mr. R.K. Singh

Members:

Mr. Rajeev Kumar
Mr. T Kamalakannan
Mr. Neeraj Mathur
Mr. Mahendra Mittal
Mr. Himangshu Pal
Mr Deepak Gupta (Projects)
Mr. R Muthu Ramalingam (RPO Rep.)

Copyright EIL – All rights reserved

1.0 SCOPE

This Inspection and Test Plan covers the minimum testing requirements of Gaskets.

2.0 REFERENCE DOCUMENTS

PO/PR/ Standards referred there in/ Job specifications /Approved documents.

3.0 INSPECTION AND TEST REQUIREMENTS

SL NO.	STAGE / ACTIVITY	CHARACTERISTICS	QUANTUM OF CHECK	RECORD	SCOPE OF INSPECTION		
					SUB SUPPLIER	SUPPLIER	EIL/TPIA
1.0	**Procedure**						
1.1	HT & Test Procedure	Documented Procedures	100%	Procedure Documents	-	H	R
2.0	**Material Inspection**						
2.1	Raw Material Inspection	Chemical, Physical and other properties as per applicable material specification	100%	Test Certificates	H	H	-
3.0	**In Process Inspection**						
3.1	Punching & Finishing	Finish & Dimension	100%	Inspection Report	-	H	-

Copyright EIL – All rights reserved

SL NO.	STAGE / ACTIVITY	CHARACTERISTICS	QUANTUM OF CHECK	RECORD	SCOPE OF INSPECTION		
					SUB SUPPLIER	SUPPLIER	EIL/TPIA
3.2	Heat Treatment for RTJ Gaskets (As applicable)	Time & Temperature	100%	HT Chart		H	R
4.0	**Final Inspection**						
4 1	Final Visual, Dimension & Testing	Compressibility, Recovery, Seal ability, Groove Hardness for Ring & Tongue Joint etc as applicable and Visual / Dimension	100%	Inspection Report	-	H	R
4.2	Final Stamping	Stamping of Accepted Gaskets	100%	Inspection Report	-	H	-
4.3	PMI Check (as applicable)	Chemical Check	As per EIL Spec: 6-81-001	Inspection Report	-	H	R
5.0	**Painting**						
5.1	Rust Preventive & Color Coding as applicable	Visual & Color Coding as applicable	100%	Inspection Report	-	H	-
6.0	**Documentation & IC**						
6.1	Documentation & IC	Review of test reports, Inspection documents & Issue of IC	100%	Supplier Records / IC	-	H	H

Copyright EIL – All rights reserved

Legend: H- Hold (Do not proceed without approval), P-Perform, RW - Random Witness (As specified or 10% (min.1 no. of each size and type of Bulk item)), R-Review, W-Witness (Give due notice, work may proceed after scheduled date).

Notes (as applicable):

1. This document describes the generic test requirements. Any additional test or Inspection scope if specified in contract documents shall also be applicable. (unless otherwise agreed upon)
2. Acceptance Norms for all the activities shall be as per PO/PR/STANDARDS referred therein /Job Specification /Approved Documents.

Copyright EIL – All rights reserved

कारट्रिज फिल्टर के लिये निरीक्षण व परीक्षण योजना

INSPECTION AND TEST PLAN FOR CARTRIDGE FILTER

Rev. No.	Date	Purpose	Prepared by	Checked by	Convener Standards Committee	Chairman Standards Bureau
					Approved by	
3	09.09.13	REVISED AND RE-ISSUED	TKK	RKS	SCG	DM
2	15.07.11	REVISED AND RE-ISSUED	HP	SCG	AKC	DM
1	21.01.08	REVISED AND RE-ISSUED	CS	SS	MVKK	VC
0	23.07.02	ISSUED FOR IMPLEMENTATION	SKT	NKN	AKB	GRR

Copyright EIL – All rights reserved

Abbreviations:

CEIL	:	Certification Engineers International Limited	MRT	:	Mechanical Run Test
CIMFR	:	Central Institute of Mining & Fuel Research	NDT	:	Non Destructive Testing
CE	:	Carbon Equivalent	NPSH	:	Net Positive Suction Head
DFT	:	Dry Film Thickness	PO	:	Purchase Order
DPT	:	Dye Penetrant Testing	PESO	:	Petroleum Explosive Safety Organization
DHT	:	De-hydrogen Heat Treatment	PQR	:	Procedure Qualification Record
ERTL	:	Electronics Regional Test Laboratory	PR	:	Purchase Requisition
FCRI	:	Fluid Control Research Institute	PMI	:	Positive Material Identification
HT	:	Heat Treatment	RT	:	Radiography Testing
HIC	:	Hydrogen Induced Cracking	SSCC	:	Sulphide Stress Corrosion Cracking
ITP	:	Inspection and Test Plan	TC	:	Test Certificate
IP	:	Ingress Protection	TPI or TPIA	:	Third Party Inspection Agency
IHT	:	Intermediate Heat Treatment	UT	:	Ultrasonic Testing
IC	:	Inspection Certificate	VDR	:	Vendor Data Requirement
IGC	:	Inter Granular Corrosion	WPS	:	Welding Procedure Specification
MPT/MT	:	Magnetic Particle Testing	WPQ	:	Welders Performance Qualification
MTC	:	Material Test Certificate			

Inspection Standards Committee

Convenor : Mr. S C Gupta

Members:

Mr. R.K. Singh
Mr.Neeraj Mathur
Mr. Mayank Jain
Mr. Rajeev Kumar
Mr. T Kamalakannan
Mr. Himangshu Pal
Mr. Deepak Gupta (Project)

Copyright EIL – All rights reserved

1.0 SCOPE:

This Inspection Test Plan covers the minimum testing requirements of Cartridge Filter

2.0 REFERENCE DOCUMENTS:

PO/PR/ Standards referred there in/ Job specifications /Approved documents.

3.0 INSPECTION AND TEST REQUIREMENTS:

SL NO.	STAGE/ ACTIVITY	CHARACTERISTICS	QUANTUM OF CHECK	RECORD	SCOPE OF INSPECTION		
					SUB SUPPLIER	SUPPLIER	EIL/TPIA
1.0	**Procedures**						
1.1	Hydro test ,heat treatment, NDT, hot forming, and other Procedures	Documented procedures.	100%	Procedure Documents	-	H	R
1.2	WPS/ PQR /WPQ	Documented procedures.	100%	Procedure documents	-	H	R-Existing W-New
2.0	**Materials inspection**						
2.1	Plates, pipes, forging, fittings ,etc	Chemical analysis & mechanical properties as per PR/data sheet.	100%	Mill test certificates and TPI reports	H	H	R

Copyright EIL – All rights reserved

SL NO.	STAGE/ ACTIVITY	CHARACTERISTICS	QUANTUM OF CHECK	RECORD	SCOPE OF INSPECTION		
					SUB SUPPLIER	SUPPLIER	EIL/TPIA
2.2	Cartridge	Cartridge properties	100%	Test Certificate	H	R	-
3.0	**In process inspection**						
3.1	Materials identification for plates, pipes (pressure parts)	Review of test certificates, markings, visual & dimensional inspection, identity correlation & transfer of identity	100%	Material clearance record	-	H	H
3.2	Material identification for forgings, fittings, fasteners, gaskets (pressure parts)	Review of test certificates, markings identity correlation .	100%	Material clearance record	-	H	R
3.3	Non pressure parts (including internals, supports etc.)	Review of test certificates	100%	Material test certificate	-	R	R
3.4	Inspection of formed components	NDT of weld seam as applicable	100%	NDT Reports / RT Films	H	H	R
		DPT on knuckle portion (both inside and out side)	100%	Inspection report	H	H	R
		HT chart review as applicable	100%	HT Chart	H	W	R
		Test coupon as applicable	100%	Inspection report	H	W	W

Copyright EIL – All rights reserved

SL NO.	STAGE/ ACTIVITY	CHARACTERISTICS	QUANTUM OF CHECK	RECORD	SCOPE OF INSPECTION		
					SUB SUPPLIER	SUPPLIER	EIL/TPIA
		Visual & dimensional (min.thickness, profile, ovality etc) inspection	100%	Inspection report	H	H	W
3.5	Weld edge preparation & set up of pressure parts	Visual & dimensional inspection, weld edge, root gap, offset, alignment, cleanliness etc	100%	Inspection check list	-	W	R
3.6	Welding consumable	Chemical , mechanical properties & IGC as applicable	100%	Batch test certificates	H	H	R
4.0	**Final inspection**						
4.1	Visual and dimensional inspection (internals & externals) including welds	Visual/ dimensions, completeness of assembly and weld visual for reinforcement, undercuts, Surface defects, etc.	100%	Inspection report	-	H	H
4.2	Air test of pads	Leak check	100%	Test report	-	W	R
4.3	Inspection of completed welds	PWHT as applicable	100%	HT chart		H	R
		NDT as applicable	100%	NDT report / RT films	-	H	R
		Production test coupon testing as applicable	as per specification / drawing	Inspection report	-	H	H
		Hardness for weld /HAZ as applicable	As per spec.	Inspection report		H	R

Copyright EIL – All rights reserved

SL NO.	STAGE/ ACTIVITY	CHARACTERISTICS	QUANTUM OF CHECK	RECORD	SCOPE OF INSPECTION		
					SUB SUPPLIER	SUPPLIER	EIL/TPIA
4.4	PMI as applicable	Chemical check	Each component and weld	Inspection report	-	H	R
4.5	Hydrostatic test	Leak check	100%	Test report	-	H	H
4.6	Installation Cartridges	Visual check	100%	Inspection report	-	H	-
4.7	Drying and Nitrogen Filling (as applicable)	Nitrogen Pressure	100%	Inspection report	-	W	-
5.0	**Painting**						
5.1	Final painting (As applicable)	Visual inspection (after surface preparation and final painting for workmanship, uniformity) DFT check	100%	Inspection report	-	H	-
6.0	**Documentation and IC**						
6.1	Final stamping, review of inspection documents and issue of IC	Verifying stamping details and review of inspection documents	100%	IC / Inspection reports	-	H	H
6.2	Final documents as per PR	Verification & compilation of inspection & test records for submission to customer	100%	Final dossier	-	H	H

Legend: H- Hold (Do not proceed without approval), P-Perform, RW - Random Witness (As specified or 10% (min.1 no. of each size and type of Bulk item)), R-Review, W-Witness (Give due notice, work may proceed after scheduled date).

NOTES (as applicable):

Copyright EIL – All rights reserved

1. This document describes the generic test requirements. Any additional test or Inspection scope if specified in contract documents shall also be applicable.(unless otherwise agreed upon)
2. Acceptance Norms for all the activities shall be as per PO/PR/STANDARDS referred there in /Job Specification /Approved Documents.

Copyright EIL – All rights reserved

Sr No	Supplier Code	Supplier Name	Country	Holiday Description
Item Code : 13MA		**Description :** JUNCTION BOXES (FLAME PROOF)		
Approved Suppliers				
1	F024	FLEXPRO ELECTRICALS PVT LTD	INDIA	
2	F141	FCG POWER INDUSTRIES PVT LTD	INDIA	
3	3681	FCG POWER INDUSTRIES PVT LTD	INDIA	
4	F036	FLAMEPROOF EQUIPMENTS PVT.LTD	INDIA	
5	F165	FCG FLAMPROOF CONTROL GEARS P. LTD(C-157	INDIA	
6		PETROLEUM SAFETY PRODUCTS IND. PVT. LTD.		
7		P&F		
8		EATON(MTL)		
9	B024	BALIGA LIGHTING EQUIPMENTS (P) LIMITED	INDIA	
10	R175	R STAHL PVT LTD	INDIA	
11	K173	KAYSONS TECHNO EQUIPMENT P LTD.	INDIA	

066048057055

Copyrights EIL - All rights reserved

Sr No	Supplier Code	Supplier Name	Country	Holiday Description
Item Code : 13OD		**Description :** CABLES:CONTROL-PVC/XLPE		
[redacted]				
11	S023	SKIRAM CABLES PVT LTD	INDIA	
12	F013	FINOLEX CABLES LTD.	INDIA	
13	3765	THERMO CABLES LTD.	INDIA	
14	3669	KEI INDUSTRIES LIMITED	INDIA	
15	3722	POLYCAB INDIA LIMITED	INDIA	
16	3724	CORDS CABLE INDUSTRIESLTD.	INDIA	
17	C145	CORDS CABLE INDUSTRIES LTD	INDIA	
18	G156	GEMSCAB INDUSTRIES LTD 066048057055	INDIA	
19	S073	SCOT INNOVATION WIRES & CABLES PVT LTD	INDIA	
20	U003	UNIVERSAL CABLES LTD	INDIA	
21	T212	THERMO CABLES LTD (FORM. T-150)	INDIA	
22		RAVIN CABLES LTD		
23	K190A	KEC INTERNATIONAL - VADODARA KEC INTERNATIONAL - SILVASSA	INDIA	
24	E063	ELKAY TELELINKS LTD.-	INDIA	
25	D012	DELTON CABLES LIMITED	INDIA	

Copyrights EIL - All rights reserved

066048057055

Sr No	Supplier Code	Supplier Name	Country	Holiday Description
Item Code : 14CA		**Description :** CABLE GLANDS (HAZARDOUS AREA)		
Approved Suppliers				
1	F165	FCG FLAMPROOF CONTROL GEARS P. LTD(C-157	INDIA	
2	F141	FCG POWER INDUSTRIES PVT LTD	INDIA	
3	3681	FCG POWER INDUSTRIES PVT LTD	INDIA	
4	F036	FLAMEPROOF EQUIPMENTS PVT.LTD	INDIA	
5	B024	BALIGA LIGHTING EQUIPMENTS (P) LIMITED	INDIA	
6		STAHL INDIA	INDIA	
7	F024	FLEXPRO ELECTRICALS PVT LTD	INDIA	

066048057055

Copyrights EIL - All rights reserved

066048057055

Sr No	Supplier Code	Supplier Name	Country	Holiday Description
Item Code : 14CJ		**Description :** CABLE TRAYS-FRP		
Approved Suppliers				
1	S113	SINTEX INDUSTRIES LTD	INDIA	
2	S112	SUMIP COMPOSITE PVT. LTD	INDIA	
3	G193	GENERAL COMPOSITES PRIVATE LIMITED	INDIA	
4	E216	EPP COMPOSITE PVT LTD	INDIA	
5	S099	SATYAM COMPOSITES PVT. LTD.	INDIA	
6		KEMROCK		
7		IDS COMPOSITES		
8		ERCON COMPOSITES		

066048057055

Sr No	Supplier Code	Supplier Name	Country	Holiday Description
Item Code : 15AB		**Description :** INSTRUMENT TUBING		
Approved Suppliers				
1	T761	TK FUJIKIN CORPORATION	KOREA, REPUBLIC OF	
2	J110B	JINDAL SAW LTD (NASHIK WORKS)	INDIA	
3	3685	HEAVY METAL & TUBES (INDIA) PRIVATE LTD (MEHSANA)	INDIA	
4	R066	RATNAMANI METALS AND TUBES LTD	INDIA	
5		SANDVIK		
6		PARKER		
7		ASTEC		

066048057055

Copyrights EIL - All rights reserved

Sr No	Supplier Code	Supplier Name	Country	Holiday Description
Item Code : 15BA		**Description :** AIR FILTER REGULATORS		
Approved Suppliers				
1	S242	SHAH PNEUMATICS	INDIA	
2	P293	PLACKA INSTRUMENTS INDIA P LTD	INDIA	
3	M710	MARSH BELLOFRAM	UNITED STATES	
4	S035	SHAVO NORGREN (I) PVT LTD	INDIA	
5	T745	THOMPSON VALVES LTD	UNITED KINGDOM	
6	V019	VELJAN HYDRAIR PVT LTD	INDIA	
7	J092	JANATICS INDIA PVT LTD	INDIA	
8		FESTO		
9	S091	SCHRADER DUNCAN LIMITED	INDIA	
10		FISHER		
11		SMP		

066048057055

Copyrights EIL - All rights reserved

Suppliers List for HR

		er Name	Cou	
		SIGNAL CABLES		
			INDIA	
			INDIA	
			GERMANY	
			INDIA	
6	3765	THERMO CABLES LTD.	INDIA	
7	3724	CORDS CABLE INDUSTRIESLTD.	INDIA	
8	3722	POLYCAB INDIA LIMITED	INDIA	
9	A034	ASSOCIATED CABLES PVT LTD	INDIA	
10	T243	T C COMMUNICATION PVT. LTD.	INDIA	
11	A132	ASSOCIATED FLEXIBLES & WIRES [P] LTD	INDIA	
12	E063	ELKAY TELELINKS LTD.-	INDIA	
13	K190B	KEC INETRNATIONAL - MYSORE	INDIA	
14	U015	UDEY PYROCABLES PVT. LTD.	INDIA	

Copyrights EIL - All rights reserved

066048057055

Sr No	Supplier Code	Supplier Name	Country	Holiday Description
Item Code : 15CD		**Description :** FIELD BUS SIGNAL CABLES		
Approved Suppliers				
1	L612	LEONI KERPEN GMBH	GERMANY	
2	B735	BELDEN INC	UNITED STATES	

066048057055

Copyrights EIL - All rights reserved

Sr No	Supplier Code	Supplier Name	Country	Holiday Description
Item Code : 15CE		**Description :** SIGNAL CABLE - FIRE RESISTANT		
Approved Suppliers				
1		LEONI KERPEN		
2	T212	THERMO CABLES LTD	INDIA	
3	E063	ELKAY TELELINKS LTD.-	INDIA	
4	C145	CORDS CABLE INDUSTRIES LTD	INDIA	
5	A132	ASSOCIATED FLEXIBLES & WIRES [P] LTD	INDIA	
6	P254	POLYCAB WIRES PRIVATE LIMITED	INDIA	
7	3669	KEI INDUSTRIES LIMITED	INDIA	
8	S304	SUYOG ELECTRICALS LTD	INDIA	

066048057055

Copyrights EIL - All rights reserved

Sr No	Supplier Code	Supplier Name	Country	Holiday Description
Item Code : 15DC		**Description :** CONTROL VALVE POSITIONER		
Approved Suppliers				
1	F176	FLOWSERVE INDIA CONTROL PVT LTD-BANGALOR	INDIA	
2	S442	SAMSON CONTROLS PVT LTD	INDIA	
		FISHER		
		METSO		
		DRESSER		

066048057055

Copyrights EIL - All rights reserved

Sr No	Supplier Code	Supplier Name	Country	Holiday Description
Item Code : 15EA		**Description :** SOLENOID VALVES		
Approved Suppliers				
1	A721	ASCO JOUCOMATIC SA	FRANCE	
2	A167	ASCO NUMATICS (INDIA) P. LIMITED	INDIA	
3	V542	VERSA BV	NETHERLANDS	
4	H554	HERION WERKE	GERMANY	For all critical services e.g.PSA,Reformers which trips the unit.
5	A555	ASCO JOUCOMATIC LTD	UNITED KINGDOM	
6	R021	ROTEX AUTOMATION LTD.	INDIA	
7	A052	AVCON CONTROLS PVT. LTD.	INDIA	
8	S091	SCHRADER DUNCAN LIMITED	INDIA	
9	A588	ALCON ALEXANDER CONTROLS LIMITED	UNITED KINGDOM	
10	P217	PRECISION INSTRUMENT COMPANY	INDIA	
11	T745	THOMPSON VALVES LTD	UNITED KINGDOM	For all critical services e.g.PSA,Reformers which trips the unit.

066048057055

Copyrights EIL - All rights reserved

Sr No	Supplier Code	Supplier Name	Country	Holiday Description
Item Code : 15EB		**Description :** CONTROL VALVES		
Approved Suppliers				
1	C731	CCI VALVE TECHNOLOGY GMBH	CZECH REPUBLIC	
2		DRESSER VALVE INDIA PRIVATE LIMITED	INDIA	
3		ITALVALV S.N.C		
4	S510	SAMSON AG MESS-UND REGELTECHNIK	GERMANY	
5	D649	DRESSER PRODUITS INDUSTRIELS	FRANCE	
6	M561	MOTOYAMA ENGG WORKS LTD	JAPAN	
7	S505	SEVERN GLOCON LTD	UNITED KINGDOM	
8	W5941	WEIR VALVES & CONTROLS UK LTD	UNITED KINGDOM	
9	S442	SAMSON CONTROLS PVT LTD	INDIA	
10		MIL CONTROLS LIMITED		
11	A761	AST APPARECCHI DI SICUREZZA E TENUTA SPA	ITALY	
12	A529	ARCA REGLER GMBH		GERMANY
13	K624	KENT INTROL UK LTD	UNITED KINGDOM	
14	E179A	EMERSON PROCESS MANGMNT CHENNAI PVT. LTD INDIA		
	F636	FLOWSERVE PTE LTD 066048057055	SINGAPORE	
15	F176	FLOWSERVE INDIA CONTROL PVT LTD-BANGALOR	INDIA	
16				
17	S793	SPX VALVES & CONTROLS UNITED STATES		
18	S023	SEVERN GLOCON INDIA PVT LTD INDIA		
19	M700	METSO FLOW CONTROL OY		FINLAND

Copyrights EIL - All rights reserved

Sr No	Supplier Code	Supplier Name	Country	Holiday Description
Item Code : 15ED		**Description :** INSTRUMENT VALVES& MANIFOLDS		
Approved Suppliers				
1	A710	ANDERSON GREENWOOD CROSBY	UNITED STATES	
2	P303	PRIME ENGINEERS	INDIA	
3	S303	SWASTIK ENGINEERING WORKS	INDIA	
4	27409	SWAGELOK LIMITED	UNITED KINGDOM	
5	F146	FLUID CONTROLS PVT LTD	INDIA	
6	P671	PARKER HANNIFIN CORPORATION	UNITED STATES	
7	A701	AUTOCLAVE ENGINERS FLUID COMPONENTS UNITED STATES		
8	P307	PANAM ENGINEERS		INDIA
9	A345	ARYA CRAFTS & ENGINEERING PVT LTD INDIA		
10	A240	ASTEC VALVES & FITTINGS PVT. LTD.		INDIA
11	C220	COMFIT & VALVES PVT. LTD.	INDIA	
12	C714	CIRCOR INSTR. TECHNOLOGIES INC	UNITED STATES	
13	B213	BAUMER TECHNOLOGIES INDIA PVT.LTD INDIA		
14	T761	TK FUJIKIN CORPORATION		KOREA, REPUBLIC OF
15	C015 M010	CHEMTROLS INDUSTRIES PVT. LTD. MICRO PRECISION PRODUCTS PVT LTD	066048057055 INDIA	INDIA
16	E104	EXCEL HYDRO PNEUMATICS PVT LTD	INDIA	
17				
18	3694	PRECISION ENGINEERING INDUSTRIES	INDIA	
19	27414	SWAGELOK COMPANY	UNITED STATES	
20	E008	EXCELSIOR ENGG. WORKS	INDIA	

Copyrights EIL - All rights reserved

Sr No	Supplier Code	Supplier Name	Country	Holiday Description
Item Code : 15EF		**Description :** ON-OFF VALVES		
Approved Suppliers				
1	I586	ITALVALV S.N.C	ITALY	
2	P544	PIBIVIESSE S. R. L.	ITALY	
3	F176	FLOWSERVE INDIA CONTROL PVT LTD-BANGALOR	INDIA	
4		ROTEX MANUFACTURERS & ENGINEERS P.LTD.		
5	K179B	KOSO INDIA PVT. LIMITED	INDIA	
6	E141	EL-O-MATIC INDIA (PVT) LTD.	INDIA	
7	M561	MOTOYAMA ENGG WORKS LTD	JAPAN	
8	W5941	WEIR VALVES & CONTROLS UK LTD	UNITED KINGDOM	
9	L001	L & T VALVES LIMITED	INDIA	
10	T733	TYCO VALVES & CONTROLS	UNITED STATES	
11	S793	SPX VALVES & CONTROLS	UNITED STATES	
12	F636	FLOWSERVE PTE LTD	SINGAPORE	
13	K511	KITAMURA VALVE MANUFACTURING CO LTD JAPAN		
14	S510	SAMSON AG MESS-UND REGELTECHNIK	GERMANY	
15	C718	CAMERON ITALY SRL	ITALY	
16	P689	PERRIN GMBH	GERMANY	
17	W092	WEIR BDK VALVES-A UNIT OF WEIR INDIA PVT	INDIA	
18	T198	PENTAIR VALVES & CONTROLS INDIA PVT LTD INDIA		
19	M700	METSO FLOW CONTROL OY		FINLAND

NOTE ; ACCEPTABLE MAKES OF ACTUATORS FOR ALL ON-OFF VALVES SHALL BE AS FOLLOWS :

BIFFI,ELOMATIC,ROTEX,AUTOMAX,FISHER,FLOWSERVE,DRESSER,SAMSON,METSO

Copyrights EIL - All rights reserved

066048057055

Sr No	Supplier Code	Supplier Name	Country	Holiday Description
Item Code : 15EG		**Description :** SELF ACTUATED PR.CONTROL VALVES		
Approved Suppliers				
1	E534	ESME VALVES LTD.	UNITED KINGDOM	
2	D649	DRESSER PRODUITS INDUSTRIELS	FRANCE	
3		MIL CONTROLS LIMITED		
4	R610	RICHARDS INDUSTRIES	UNITED STATES	
5	N088	NIRMAL INDUSTRIAL CONTROL PVT. LTD.	INDIA	
6	S442	SAMSON CONTROLS PVT LTD	INDIA	
7	S510	SAMSON AG MESS-UND REGELTECHNIK	GERMANY	
8		NUOVO PIGNONE		
9	E626	ELSTER-INSTROMET NV-	BELGIUM	
10	R539	RMG REGEL+MESSTECHNIK GMBH	GERMANY	
11	P538	PIETRO FIORENTINI SPA	ITALY	
12	G603	GORTER CONTROLS B.V.	NETHERLANDS	
13	3631	EMERSONPROCESSMANAGEMENT CHENNAI PVT LTD	INDIA	
14		DRESSER VALVE INDIA PRIVATE LIMITED		

066048057055

Copyrights EIL - All rights reserved

Sr No	Supplier Code	Supplier Name	Country	Holiday Description
Item Code : 15EX		**Description :** SPECIAL CONTROL VALVES (LOW CV)		
Approved Suppliers				
1	D649	DRESSER PRODUITS INDUSTRIELS	FRANCE	
2		MIL CONTROLS LIMITED	INDIA	
3	S510	SAMSON AG MESS-UND REGELTECHNIK	GERMANY	
4	E6232	EMERSON PROCES MGMT ASIA PACIFIC PTE LTD	SINGAPORE	
5	E179A	EMERSON PROCESS MANGMNT CHENNAI PVT. LTD	INDIA	
6	I172	INSTRUMENTATION LTD. (PALGHAT)	INDIA	
7	F636	FLOWSERVE PTE LTD	SINGAPORE	
8		DRESSER VALVE INDIA PVT LTD		

066048057055

Copyrights EIL - All rights reserved

Sr No	Supplier Code	Supplier Name	Country	Holiday Description
Item Code : 15GA		**Description :** ORIFICE PLATES & FLANGES		
Approved Suppliers				
1	G016	GURU NANAK ENGG WORKS	INDIA	
2	E022	EUREKA INDUSTRIAL EQUIPMENTS (P) LTD.	INDIA	
3	P538	PIETRO FIORENTINI SPA	ITALY	
4	T516	TM TECNOMATIC SPA	ITALY	
5	C220	COMFIT & VALVES PVT. LTD.	INDIA	
6	B024	BALIGA LIGHTING EQUIPMENTS (P) LIMITED	INDIA	
7	P514	PETROL VALVES SRL	ITALY	
8	M045	MINCO (INDIA) PVT LTD (GEN. INST.)	INDIA	
9		CHEMTROLS SAMIL		
10	M010	MICRO PRECISION PRODUCTS PVT LTD	INDIA	
11	S286	STAR-MECH CONTROLS (INDIA) PVT LTD	INDIA	
12		DANIEL MEASUREMENT & CONTROL ASIA PACIFIC		
13		INSTRUMENTATION LTD-PALGHAT		
14		CAMERON LTD.		

066048057055

Copyrights EIL - All rights reserved

Sr No	Supplier Code	Supplier Name	Country	Holiday Description
Item Code : 15HD		**Description :** TEMP.ELEMENTS,THERMOWELLS		
Approved Suppliers				
1	T232	TECHNO INSTRUMENTS	INDIA	
2	A682	ABB AUTOMATION LTD	UNITED KINGDOM	
3	P190	PYRO-ELECTRIC INSTRUMENTS GOA PVT LTD	INDIA	
4	W589	WIKA ALEXANDER WIEGAND & CO GMBH	GERMANY	
5	T514	THERMO ELECTRIC CO. INC.	UNITED STATES	
6		THERMAL INSTRUMENTS(I) PVT LTD	INDIA	
7	T516	TM TECNOMATIC SPA	ITALY	
8	T734	THERMO-ELECTRA B.V	NETHERLANDS	
9	T095	TEMP-TECH	INDIA	
10	T705	THERMO-COUPLE PRODUCTS CO	UNITED STATES	
11	G192	GOA INSTRUMENTS INDUSTRIES PVT. LTD.	INDIA	
12	D004	DETRIV INSTRUMENTATION & ELECTRONICS LTD	INDIA	
13	T146	TEMPSENS INSTRUMENTS INDIA PVT LTD	INDIA	
14	A206	ALTOP INDUSTRIES LTD.	INDIA	
15		GAYESCO LLC		
16	D677	DAILY THERMETRICS CORPORATION		UNITED STATES

Copyrights EIL - All rights reserved

066048057055

Sr No	Supplier Code	Supplier Name	Country	Holiday Description
Item Code : 15KA		**Description :** PRESSURE GAUGES		
Approved Suppliers				
1	B696	BADOTHERM PROCESS INSTRUMENTS B.V.	NETHERLANDS	
2	G192	GOA INSTRUMENTS INDUSTRIES PVT. LTD.	INDIA	
3	W061	WIKA INSTRUMENTS INDIA PVT LTD	INDIA	
4	G115	GAUGES BOURDON (I) PVT. LTD. (GEN.INST)	INDIA	
5		BAUMER BOURDON HAENNI SAS		
6	A053	AN INSTRUMENTS PVT LTD	INDIA	
7	B213	BAUMER TECHNOLOGIES INDIA PVT.LTD	INDIA	
[redacted]		[redacted]	UNITED KINGDOM	[redacted]
[redacted]		[redacted]	INDIA	[redacted]
[redacted]		[redacted]	INDIA	[redacted]
[redacted]		[redacted]	GERMANY	[redacted]

Copyrights EIL - All rights reserved

Sr No	Supplier Code	Supplier Name	Country	Holiday Description
Item Code : 15KD		**Description :** DIFFERENTIAL PRESSURE GAUGES		
Approved Suppliers				
1	S087	SWITZER PROCESS INSTRUMENTS PVT. LTD.	INDIA	
2	G115	GAUGES BOURDON (I) PVT. LTD. (GEN.INST)	INDIA	
3	B213	BAUMER TECHNOLOGIES INDIA PVT.LTD	INDIA	
4	H139	HIRLEKAR PRECISION ENGINEERING PVT LTD	INDIA	
5	A053	AN INSTRUMENTS PVT LTD	INDIA	
6	W061	WIKA INSTRUMENTS INDIA PVT LTD	INDIA	

066048057055

Copyrights EIL - All rights reserved

Sr No	Supplier Code	Supplier Name	Country	Holiday Description
Item Code : 15LA		**Description :** TEMP.GAUGES(BI METALLIC,FILLED SYSTEM)		
Approved Suppliers				
1	B696	BADOTHERM PROCESS INSTRUMENTS B.V.	NETHERLANDS	
2	W589	WIKA ALEXANDER WIEGAND & CO GMBH	GERMANY	
3	A053	AN INSTRUMENTS PVT LTD	INDIA	
4	G115	GAUGES BOURDON (I) PVT. LTD. (GEN.INST)	INDIA	
5	A362	PRECISION MASS PRODUCTS PVT. LTD.	INDIA	
6		BAUMER BOURDON HAENNI SAS		
7	G192	GOA INSTRUMENTS INDUSTRIES PVT. LTD.	INDIA	
8	W064	WALCHANDNAGAR INDUSTRIES LTD(TIWAC DIVN)	INDIA	
9	B213	BAUMER TECHNOLOGIES INDIA PVT.LTD	INDIA	
10	W061	WIKA INSTRUMENTS INDIA PVT LTD	INDIA	

Copyrights EIL - All rights reserved

066048057055

Sr No	Supplier Code	Supplier Name	Country	Holiday Description
Item Code : 15MB		**Description :** VARIABLE AREA FLOW METERS(I,T)		
Approved Suppliers				
1	A682A	ABB AUTOMATION PRODUCTS GMBH	GERMANY	
2	Y006	YOKOGAWA INDIA LIMITED	INDIA	
3	P293	PLACKA INSTRUMENTS INDIA P LTD	INDIA	
4	T530	TOKYO KEISO CO LTD	JAPAN	
5	A623	ASA SPA	ITALY	
6	K582	KROHNE MESSTECHNIK GMBH & CO KG	GERMANY	
7	E022	EUREKA INDUSTRIAL EQUIPMENTS (P) LTD.	INDIA	
8	H626	HEINRICHS MESSTECHNIK GMBH	GERMANY	
9	R515	ROTA YOKOGAWA GMBH & CO. KG	GERMANY	
10	K105	KRONE MARSHALL PVT. LTD		
11	I030	INSTRUMENTATION ENGINEERS PVT. LTD.	INDIA	
12	A172	ALFLOW GLASS EQUIPMENTS	INDIA	
13	B510	BROOKS INSTRUMENT	UNITED STATES	

066048057055

Copyrights EIL - All rights reserved

Sr No	Supplier Code	Supplier Name	Country	Holiday Description
Item Code : 15NI		**Description :** MASS FLOW METERS		
Approved Suppliers				
1	F641	FOX THERMAL INSTRUMENT INC.	UNITED STATES	
2	3599	Endress+Hauser Flowtec (India) Pvt Ltd	INDIA	
3	B621	BRONKHORST HIGH TECH BV	NETHERLANDS	
4		KROHNE MESSTECHNIK Gmbh & Co.KG	GERMANY	
5	R604	RHEONIK MESSTECHNIK GMBH	GERMANY	
6	E187	ENDRESS+HAUSER (I) PVT. LTD.	INDIA	
7	M508	MAGNETROL INTERNATIONAL N.V	BELGIUM	
[redacted]			INDIA	
[redacted]			UNITED S	
[redacted]		EMENT INDIA PVT	INDIA	
[redacted]		C AG	SWITZERL	
[redacted]		NATIONAL LLC	UNITED S	
[redacted]		CO. KG	GERMAN	
[redacted]			UNITED S	
[redacted]		IA PACIFIC PTE LTD	SINGAPO	
[redacted]		TS GMBH	GERMAN	
[redacted]		MBH 066048057055		

Copyrights EIL - All rights reserved

Sr No	Supplier Code	Supplier Name	Country	Holiday Description
Item Code : 15OG		**Description :** SPL. LEVEL INSTRUMENTS-GUIDED WAVE RADAR		
Approved Suppliers				
1	M508	MAGNETROL INTERNATIONAL N.V	BELGIUM	
2	E232	ENDRESS+HAUSER (I) AUTO. INSTR. PVT. LTD	INDIA	
3	L562	L & J TECHNOLOGIES	UNITED STATES	
4	E179	EMERSON PROCESS MANAGEMENT INDIA PVT LTD	INDIA	
5	V518	VEGA GRIESHABER KG	GERMANY	
6	A759	ABB INC	UNITED STATES	
7	E657	ENDRESS+HAUSER GMBH+CO. KG	GERMANY	

066048057055

Copyrights EIL - All rights reserved

Sr No	Supplier Code	Supplier Name	Country	Holiday Description
Item Code : 15RD		**Description :** FIELD INSTRUMENTS (P,DP,F,L,T,TD)		
Approved Suppliers				
1	A200	ABB INDIA LTD (BANGALORE)	INDIA	
2		SCHNEIDER ELECTRIC SYSTEMS INDIA. PVT. LTD	INDIA	
~~3~~	~~H621~~	~~HONEYWELL INC.~~	~~UNITED STATES~~	
4	E623	EMERSON PROCES MGMT ASIA PACIFIC PTE LTD	SINGAPORE	NOT RECOMMENDED FOR FF TRANSMITTER
5	E657	ENDRESS+HAUSER GMBH+CO. KG	GERMANY	
6	F644	FUJI ELECTRIC SYSTEMS CO. LTD	JAPAN	
7	E179	EMERSON PROCESS MANAGEMENT INDIA PVT LTD	INDIA	NOT RECOMMENDED FOR FF TRANSMITTER
8	Y006	YOKOGAWA INDIA LIMITED	INDIA	
9	Y501	YOKOGAWA ELECTRIC CORPORATION	JAPAN	
10	A682A	ABB AUTOMATION PRODUCTS GMBH	GERMANY	
~~11~~	~~H150~~	~~HONEYWELL AUTOMATION INDIA LTD.~~	~~INDIA~~	
12	E641	ENDRESS+HAUSER WETZER GMBH+ CO.KG	GERMANY	

066048057055

Copyrights EIL - All rights reserved

Sr No	Supplier Code	Supplier Name	Country	Holiday Description
Item Code : 15TC		**Description :** TANK LEVEL INSTRUMENT (RADAR,ULTRASONIC)		
Approved Suppliers				
1	E657	ENDRESS+HAUSER GMBH+CO. KG	GERMANY	
2		KROHNE MESSTECHNIK Gmbh & Co.KG	GERMANY	
3	E550	ENRAF B.V. (GR. COMPANY OF HONEYWELL)	NETHERLANDS	
4	S5241	SIEMENS AG	GERMANY	
5	M508	MAGNETROL INTERNATIONAL N.V	BELGIUM	
6	L562	L & J TECHNOLOGIES	UNITED STATES	
7	A727	AMETEK DREXELBROOK	UNITED STATES	
8	M715	MOBREY LTD	UNITED KINGDOM	
9	R616	ROSEMOUNT TANK RADAR AB	SWEDEN	
10	E179	EMERSON PROCESS MANAGEMENT INDIA PVT LTD	INDIA	
11	E232	ENDRESS+HAUSER (I) AUTO. INSTR. PVT. LTD	INDIA	
12	H622	HAWK MEASUREMENT SYSTEM PTY LTD	AUSTRALIA	
13	V518	VEGA GRIESHABER KG	GERMANY	

066048057055

Copyrights EIL - All rights reserved