Tender Details & Specification

DESCRIPTION	***Supply of CS & AS Formed Fittings shall be as per BHEL Drawings, TDC 423 Rev 10, SQP, Specification and applicable standard***

Item Sl. No.	Material Code	Description	Quantity	Unit
10	921170010022	BW REDUCER OD 406.4x55 / OD 368x40 LENGTH 546.4 AS PER DRG. 3-12-000-16318 REV 01 AND SPECIFICATION SA234WP12CL1	2	Nos.
20	921170010023	BW REDUCER OD 406.4x55 / OD 368x50 LENGTH 546.4 AS PER DRG. 3-12-000-16319 REV 01 AND SPECIFICATION SA234WP12CL1	2	Nos.
30	921170010024	BW REDUCER OD 470x60 / OD 368x50 LENGTH 610 AS PER DRG. 3-12-000-16320 REV 02 AND SPECIFICATION SA234WP22CL1	2	Nos.
40	921050300000	BW EQUAL TEE OD 88.9X17 AS PER DRG. 3-24-815-03978 REV 01 AND SPECIFICATION SA234WP91	5	Nos.

Specification, Size & Quantity:

a) All the **CS & AS Formed Fittings** are to be supplied fully meeting the applicable **TDC 423/10, Drawings, Specification, standard and shall comply with Approved SQP by BHEL**. If there is any deviation, the same should be mentioned clearly in the offer itself.

b) **Confirmation for Pre-Qualification Requirements (PQR) along with all necessary documents shall be submitted.**

c) Supply of fittings shall be as per reference BHEL Standard Quality plan (SQP). Dispatch clearance will be given only after Inspection by BHEL/BHEL approved TPIA at vendor's work as per the SQP.

d) TC in FORM IIIC, works TC, Raw Material TC (FORM IV), UT report, MPI, LPI report and other test certificates as called in TDC 423/10 shall be sent along with supply.

e) Supply of CS & AS Formed Fittings shall be as per latest IBR amendment.

f) **Inspection by TPI/BHEL & IBR authorized inspection agency at supplier works.**

g) Ends shall be protected with suitable End covers.

h) Quantity shall be as given in enquiry.

BHARAT HEAVY ELECTRICALS LIMITED, TRICHY-14
MATERIALS MANAGEMENT

PQR: C&F: CFFGI **Date: 31.03.2025**

Pre-qualification requirements (PQR) for procurement of SA234WPB, SA234WPC, SA234WP12CL1 & SA234WP22CL1 Formed Fittings through Open Tender (as per TDC: 0:423/10)

S.No	Pre-Qualification Conditions	Bidders Confirmation
A)	**Organizational Capability:**	
1	Manufacturers having Fittings manufacturing facilities are only eligible to participate. Offer from traders, fabricators and stockists are not acceptable and will not be considered for evaluation. Vendor to indicate the nature of the firm. Product catalogue shall be submitted.	
2	Suppliers shall submit list of machineries, testing facilities & valid calibration certificate for heat treatment facilities that are available in-house. Suppliers without basic manufacturing facilities in-house, shall not be considered for evaluation. In-house facilities for Heat treatment is mandatory requirement for consideration of the offer.	
3	If the supplier is not having steel making facility, then source of raw material for the manufacturing shall be from IBR approved well known steel maker (Form IIIG to be submitted) or certified by IBR approved inspecting authority (Form-IV to be submitted). The supplier shall confirm that the raw material test certificate/s will be furnished along with product test certificate/s.	
4	Chemical, Mechanical testing shall be done in house or at Labs certified as per ISO 17025 or Government approved labs.	
5	Suppliers shall submit a valid ISO 9001 certificate or Quality management system certificate or Written down procedure.	
6	BHEL/End customer reserve the right to inspect the item ordered at any stage at vendor's works and if found not meeting the stipulated conditions, material is liable for rejection.	
B)	**Technical Competence:**	
1	Supply of Formed fittings shall be as per BHEL TDC, applicable BHEL Drawings and Specification/standard.	
2	Point by point confirmation to the TDC requirements is mandatory for consideration of offer and signed TDC shall be submitted.	
3	Supply of fittings shall be as per reference BHEL Standard Quality plan (SQP). Dispatch clearance will be given only after Inspection by BHEL/BHEL approved TPIA at vendor's work as per the SQP.	

RAKESH MALIK Digitally signed by RAKESH MALIK Date: 2025.03.31 15:31:48 +05'30'

Dr. Sriharsha Theerdhala Digitally signed by Dr. Sriharsha Theerdhala Date: 2025.03.31 15:37:29 +05'30'

C)	**Past Experience/ Performance:**	
1	Suppliers shall have supplied Formed fittings in the tendered specification or Equivalent Specification.	
2	Bidder must have qualified Design Proof Test (Burst Test) for the quoted product. (Elbow, Tee, Reducer) as per ASME B16.9. Bids of only those products (Elbow, Tee, Reducer) that qualify design proof test only will be considered.	
3	Copy of Design Proof Test report issued / witnessed by any Third Party Agency / End Customers. Details of Deign Proof Test shall be indicated in Annexure 1 to PQR.	
4	Details of supplies made in recent past detailing the quantity, Specification, size & customer details, year wise along with the unpriced PO copies, proof of supply (such as invoice, bill of lading copies and test certificates) specification in any of the following specifications-**SA234WPB / SA234WPC / SA105, SA234WP12 / SA182F12, SA234WP22 / SA182F22** or in higher grades like **Gr.91 & Gr.92** shall be submitted.	
D)	**Financial Soundness:**	
1	Indigenous suppliers shall submit Audited copies of annual reports (Balance Sheets), Profit & Loss statement for last 3 years (or from date of incorporation whichever is less). Proprietary and partnership firms shall submit IT returns for last 3 years (or from date of incorporation whichever is less).	

Necessary supporting documents shall be submitted for meeting each of the above Pre-Qualification Criteria for evaluation of the offers.

BHEL reserves the right to consider/Not-consider the offers based on the evaluation of documents submitted for the above Pre-Qualification Criteria. BHEL also reserves the right to have on-site assessment of the facilities at supplier's works during the bid evaluation.

RAKESH MALIK
Digitally signed by RAKESH MALIK
Date: 2025.03.31 15:32:14 +05'30'

Dr. Sriharsha Theerdhala
Digitally signed by Dr. Sriharsha Theerdhala
Date: 2025.03.31 15:37:58 +05'30'

Annexure 1 to PQR - Experience List & Design Proof Test Qualification Format

Details of design proof test qualification (burst test)

Sl No	Product supplied (Elbow / Reducer / Tee)	Burst test report (Certificate No)	Third party / End customer who has witnessed / approved the burst test	Burst test size		List of supporting documents to be submitted (Burst test report)
				OD	Thk	
1	Elbow					
2	Tee					
3	Reducer					

Details of experience in supply of Formed Fitttings SA234WPC/SA105, SA234WP12/SA182F12, SA234WP22/SA182F22 or higher grade fittings.

Sl No	Product supplied (Elbow / Reducer / Tee)	Purchase Order No & Date	Size of item supplied (OD & Thk.)	Month & Year of supply	Customer name	Customer contact email and no (if available)	List of supporting documents to be submitted (PO copy, Inspection Report, MTC's, Invoice, BL / LR)
1							
2							
3							
4							
5							
6							

BHARAT HEAVY ELECTRICALS LIMITED TIRUCHIRAPPALLI 620 014 INDIA

STANDARD QUALITY PLAN FOR MACHINED, FORMED & FORGED FITTINGS CONFORMING TO TDC:423 (Latest Rev. Attached as annexure)	SQPPP:17 REV :00

Prepared by: Quality Assurance T Sriharsha, Manager/QA	T. Sriharsha 27/02/2025

Reviewed by	Signature
Engineering S Anand Kumar, SDGM/PE(FB)	S. Anand 27/02/2025
Materials Management Ramesh Kumar P K , SDGM/ MM	27/2/25
Quality Assurance V Deepesh, DGM/QA	27/02/2025
Quality Control S Krishna Kumar, AGM/QC	27 02 2025
Quality Assurance J V V Aruna Kumar, AGM/QA & BE	27/02/2025

BHARAT HEAVY ELECTRICALS LIMITED TRICHY QUALITY DEPT.	STANDARD QUALITY PLAN FOR MACHINED, FORMED & FORGED FITTINGS CONFORMING TO TDC:423 (Latest Rev)	QP NO : SQPPP:17 REV.NO : 00 DATE : 27-02-2025

REF: BHEL TDC No. : TDC:423 (Latest Rev)

SL . NO.	COMPONENT OR OPERATION	CHARACTERISTICS	CLASS	TYPE OF CHECK	QUANTUM OF CHECK	REFERENCE DOCUMENT	ACCEPTANCE STANDARD	RECORD		AGENCY		REMARKS
								Type	Req	M	B	
1	2	3	4	5	6	7	8	9	10	11	12	13
1.0	**i) P91/P92 requirement - RAW MATERIAL sources for P91/P92 shall be as per BHEL approved vendor list Any other source proposed by the vendor shall be subjected to BHEL approval. ii) IBR requirement- The Test Certificate for all material specifications received from RM manufacturer shall meet IBR requirements**											
1.1	Seamless Tube/Pipe / Forging	Heat Treatment, Chemical and Mechanical property, UT	Major	Verification of MTC & Ladle Analysis Report	100%	As per Required Material (ASME) Specification, TDC:423 (Clause 2.1)		Form III-A / Form III-G/Form IV as applicable and Mill TC	√√	P	**R**	Refer Note:1
1.2		Radioactive contamination for SS	Major	Measurement	100%	As per TDC:423 Acceptance limits: Shall be less than 0.1 milli Rontgen (MR) per hr or 1 micro Sievert per hr.		Mill TC - (for SS)	√√	P	**R**	
1.3		Raw Material Check (chemical)	Major	PMI	100%	As per Required Material (ASME) Specification		IR	√	P	V	
1.4	Plates	Co-relation & verification of Mill TCs for										
1.5		a) Heat Treatment,Chemical & Mechanical	Major	Verify	100%	BHEL Drawing , Material Spec.		Form IV & Mill TC	√√	P	**R**	
1.6		b) Soundness	Major	NDE - UT $	100%	SA578 Acceptance level - B						$ t > 10 mm

LEGEND: M:- Manufacturer; B:- BHEL/ BHEL Nominated Agency; P - Perform; V - Verification; R-Review; W - Witness; H - Hold ; IR- Inspection Report

LEGEND: Record Requirement - " √ "- Documents required for verification only; "√√" - Documents required to be submitted to BHEL

BHARAT HEAVY ELECTRICALS LIMITED TRICHY QUALITY DEPT.	STANDARD QUALITY PLAN FOR MACHINED, FORMED & FORGED FITTINGS CONFORMING TO TDC:423 (Latest Rev)	QP NO : SQPPP:17 REV.NO : 00 DATE : 27-02-2025

REF: BHEL TDC No. : TDC:423 (Latest Rev)

SL . NO.	COMPONENT OR OPERATION	CHARACTERISTICS	CLASS	TYPE OF CHECK	QUANTUM OF CHECK	REFERENCE DOCUMENT	ACCEPTANCE STANDARD	RECORD		AGENCY		REMARKS
								Type	Req	M	B	
1	2	3	4	5	6	7	8	9	10	11	12	13
2.0	**IN PROCESS INSPECTION**											
2.1	Fitting Forming / Forging Procedure	Procedure qualification	Major	Review	100%	ASME SA 234 & BHEL TDC:423		BHEL Approved Procedure	√	P	**V**	Procedure shall be approved by BHEL.
2.2	NDE - MT, UT and RT Procedure	Procedure Review	Major	Review	100%	ASME SA 234 & BHEL TDC:423		BHEL Approved Procedure	√	P	**V**	Procedure shall be approved by BHEL.
2.3	Forming/ Forging of pipe fittings	Process parameters	Major	Temperature, Measurement & Visual	100%	ASME SA 234 & Appd.Procedure		Internal report	√√	P	W*	W* : For 1st off trial at random during First time P.O. execution with BHEL Trichy
2.4	Heat Treatment (HT)	Rate of Heating, Rate of Cooling & Soaking time	Critical	Temp & Time graph	100%	ASME SA 234 & BHEL TDC:423 Refer Note : 2		HT Chart	√√	P	**R** / **W***	W* : For 1st off trial at random during First time P.O. execution with BHEL Trichy
2.5	Surface treatment for SS	Pickling & passivation	Major	Visual	100%	ASTM A380 & BHEL TDC:423		Internal Report	√	P	**V**	Verification
3.0	**TESTS**											
3.1	Test Piece	Selection of Test coupons	Major	Identification, measurement & stamping	One Sample / Heat / HT Batch	As per ASTM A370 Refer Note : 4 & 6		Report	√√	P	**W***	W* : First lot inspection for each type of fitting
3.2	Test Piece	Product Analysis	Major	Chemical Composition	One Sample / Heat	ASME SA 234, IBR & BHEL TDC:423		Test Report	√√	P	**W***	W* : First lot inspection for each type of fitting
3.3	Test Piece	Tensile Test (YS, UTS, % Elongation)	Major	Mechanical	One Sample / Heat / HT Batch	ASME SA 234, IBR & BHEL TDC:423		Test Report	√√	P	**W***	W* : First lot inspection for each type of fitting
3.4	Test Piece	Bend test	Major	Mechanical	One Sample / Heat / HT Batch	ASME SA 234, IBR & BHEL TDC:423		Test Report	√√	P	**W***	W* : First lot inspection for each type of fitting
3.5	Test Piece	Photomicrograph test & Microstructure for WP91 & 92 Fittings	Major	Metallographic test	One Sample / Heat / HT Batch	BHEL TDC:423 (No micro fissures allowed)		Test Report (Magnification at minimum 400x)	√√	P	**W**	Photomicrographs shall be provided as records for review & acceptance and future in-service reference
3.6	Finished Products	Hardness	Major	Hardness test	100% / 10%	ASME SA 234 & BHEL TDC:423		Test Report	√√	P	**W**	100% for WP91 & 92; 10% for others

LEGEND: M:- Manufacturer; B:- BHEL/ BHEL Nominated Agency; P - Perform; V - Verification; R-Review; W - Witness; H - Hold ; IR- Inspection Report

LEGEND: Record Requirement - " √ "- Documents required for verification only; "√√" - Documents required for Review and Witness and same to be submitted to BHEL.

BHARAT HEAVY ELECTRICALS LIMITED TRICHY QUALITY DEPT.	STANDARD QUALITY PLAN FOR MACHINED, FORMED & FORGED FITTINGS CONFORMING TO TDC:423 (Latest Rev)	QP NO : SQPPP:17 REV.NO : 00 DATE : 27-02-2025

REF: BHEL TDC No. : TDC:423 (Latest Rev)

SL . NO.	COMPONENT OR OPERATION	CHARACTERISTICS	CLASS	TYPE OF CHECK	QUANTUM OF CHECK	REFERENCE DOCUMENT	ACCEPTANCE STANDARD	RECORD		AGENCY		REMARKS
								Type	Req	M	B	
1	2	3	4	5	6	7	8	9	10	11	12	13
3.7	Finished Products	Volumetric Defect for OD ≥ 219 mm or WT ≥ 6 mm.	Major	NDE - UT	100% / 10%	ASTM E213, TDC:423 (For fittings made from pipe and Tubes) ASTM A388, TDC:423 (For fittings made from forgings) ASTM A578 level B, TDC:423 (For fittings made from Plates)		Test Report	√√	P	W	100% for WP91 & 92 (Refer Note 15); 10% for others
3.8	Finished Products	Sub-surface Defect for all sizes	Critical	NDE - MT	100% / 10%	ASTM E709, TDC:423		Test Report	√√	P	W	100% for WP91 & 92 (Refer Note 15) ; 10% for others
	Finished Products			NDE - DPT for SS	100% / 10%	ASTM E165,TDC:423		Test Report	√√	P	W	
3.9	PMI for AS & SS fittings	Chemical	Major	PMI	100%	ASME SA 234, SA 403 , SA 815 & BHEL TDC:423		Test Report	√√	P	W	
3.10	Burst Test	Performance & Design Proof	Critical	Hydro Test	One / Type (on similar Fitting$)	ASME B 16.9 & ASME SA 234		Test Report	√	P	V	$ - As allowed in relevant standard
4.0	**FINAL INSPECTION on Finished Products**											
4.1	Final Visual and Dimensional Inspection	Surface check, Bend angle, Radius, End-to-end dimn, Ovality, Thickness, Wrinkles, d1 at ends, Edge preparation & other dimensions as per Drg.	Critical	Visual & Measurement	100%	SA234, ASME B16.9/B16.11 / BHEL Drg. as applicable, BHEL TDC:423; P.O. for D1 details		Visual & Dimensional Report (Thickness Report format as per Annexure-I for Elbow, Tee & Reducer)	√√	P	W	Minimum thickness measured at any location on the finished fitting shall be not less than 0.875 of the specified nominal thickness.

LEGEND: M:- Manufacturer; B:- BHEL/ BHEL Nominated Agency; P - Perform; V - Verification; R-Review; W - Witness; H - Hold ; IR- Inspection Report

LEGEND: Record Requirement - " √ "- Documents required for verification only; "√√" - Documents required for Review and Witness and same to be submitted to BHEL.

BHARAT HEAVY ELECTRICALS LIMITED TRICHY QUALITY DEPT.	STANDARD QUALITY PLAN FOR MACHINED, FORMED & FORGED FITTINGS CONFORMING TO TDC:423 (Latest Rev)	QP NO : SQPPP:17 REV.NO : 00 DATE : 27-02-2025

REF: BHEL TDC No. : TDC:423 (Latest Rev)

SL . NO.	COMPONENT OR OPERATION	CHARACTERISTICS	CLASS	TYPE OF CHECK	QUANTUM OF CHECK	REFERENCE DOCUMENT	ACCEPTANCE STANDARD	RECORD		AGENCY		REMARKS
								Type	Req	M	B	
1	2	3	4	5	6	7	8	9	10	11	12	13
4.2	Radioactive contamination for SS	Radioactivity	Major	Measurement	100%	BHEL TDC:423		Report	√√	P	**W#**	W# - 10%
4.3	Finished Products	Marking	Major	Visual	100%	BHEL TDC:423 & P.O for Additional req		Predispatch inspection report as per Annexure-II	√√	P	**W#**	W# - 10%
4.4	Pre Dispatch Inspection	Preservation & Packing	Major	Visual	100%	BHEL TDC:423 Clause 5.0 & P.O for Additional req		Predispatch inspection report as per Annexure-II	√√	P	**R**	
5	**DOCUMENTATION & CERTIFICATION**											
5.1	Documentation Clearance	Manufacture Test Certificate (MTC)	Critical	Verification	100%	BHEL TDC:423 & P.O for Additional req		MTC	√√	P	**H**	
5.2		IBR Certification	Critical	All tests as per IBR	100%	IBR		FORM III-C / FORM III-I	√√	P	**H**	
5.3		Other Reports	Critical	Verification	100%	All reports as required in this QAP with proper correlation.		Report	√√	P	**H**	Note-14

LEGEND: M:- Manufacturer; B:- BHEL/ BHEL Nominated Agency; P - Perform; V - Verification; R-Review; W - Witness; H - Hold ; IR- Inspection Report

LEGEND: Record Requirement - " √ "- Documents required for verification only; "√√" - Documents required for Review and Witness and same to be submitted to BHEL.

BHARAT HEAVY ELECTRICALS LIMITED TRICHY QUALITY DEPT.	STANDARD QUALITY PLAN FOR MACHINED, FORMED & FORGED FITTINGS CONFORMING TO TDC:423 (Latest Rev)	QP NO : SQPPP:17 REV.NO : 00 DATE : 27-02-2025

REF: BHEL TDC No. : TDC:423 (Latest Rev)

SL . NO.	COMPONENT OR OPERATION	CHARACTERISTICS	CLASS	TYPE OF CHECK	QUANTUM OF CHECK	REFERENCE DOCUMENT	ACCEPTANCE STANDARD	RECORD		AGENCY		REMARKS
								Type	Req	M	B	
1	2	3	4	5	6	7	8	9	10	11	12	13

NOTES :-

1.0 (a) If the raw materials are received directly from RM Manufacturer's works, the material shall be accepted based on (i)correlation of Heat number on material with TC and (ii)verification of TCs.

(b) If the materials are received through Dealers place, check test (Chemical and Mechanical tests on one sample per Heat/ size; Random Hardness check per heat in case of Gr. 91/92) shall be done in addition to the above for accepting the material

POST FORMING HEAT TREATMENT :-

Normalizing and Tempering shall be performed as per BHEL TDC

For Gr91 & 92 materials :

2.0 Normalising and Tempering shall be carried out within 72 hours after completion of forming.

The items shall be kept dry and stress free.

The temperature shall be brought down to room temperature after hot forming before normalizing and also after normalizing before tempering

Normalising and tempering of Gr91 & 92 shall be done encompassing the entire component.

3.0 Forged Fitting shall be forged to the shape with a minimum forge reduction ratio of 4:1. Forged Fitting shall not be machined from a forged block.

4.0 Seal tranfer on pieces to be cut shall be done by BHEL inspector & IBR for Gr-91 & 92 materials and IBR for other than Gr-91 & 92 materials.

5.0 Creep testing shall be carried out as per SIP:RM:01 (latest revision) whenever indicated in the Enquiry/Purchase Order/Engineering Drawing.Test reports shall be offered to BHEL inspector for verification and further acceptance

6.0 Chemical & Mechanical tests shall be performed at NABL approved laboratories.

7.0 All NDE procedures shall be submitted to BHEL for review and approval.

8.0 NDE procedures shall have Level-III certified personnel approval

9.0 Gas cutting & Plasma cutting are prohibited for Gr91 & 92 material.

10.0 All items shall be inspected and cleared by BHEL / BHEL authorised Inspection agency & IBR/IBR Authorized Inspecting Authorities.

11.0 Necessary IBR Requirements shall be fulfilled and IBR documents to be submitted.

12.0 Documents Marked as "√" for verification only shall be submitted to BHEL / BHEL authorised Inspection agency on demand

13.0 1st off trial Documents shall be verified by BHEL / BHEL authorised Inspection agency before review of present document

14.0 For TPIA - All applicable documents as per QAP to be attested and uploaded in BHEL CQIR portal before issue of Final IR.

15.0 The Quantum will be subject to change based on the feedback received from the inspections previuosly performed

LEGEND: M:- Manufacturer; B:- BHEL/ BHEL Nominated Agency; P - Perform; V - Verification; R-Review; W - Witness; H - Hold ; IR- Inspection Report

LEGEND: Record Requirement - " √ "- Documents required for verification only; "√√" - Documents required for Review and Witness and same to be submitted to BHEL.

Annexure-I

THICKNESS MEASUREMENT REPORT FOR TEE

Date: dd:mm:yyyy

PO Number:
Description of Material:
Size:
Material Spec. & Grade
Work order/DU:

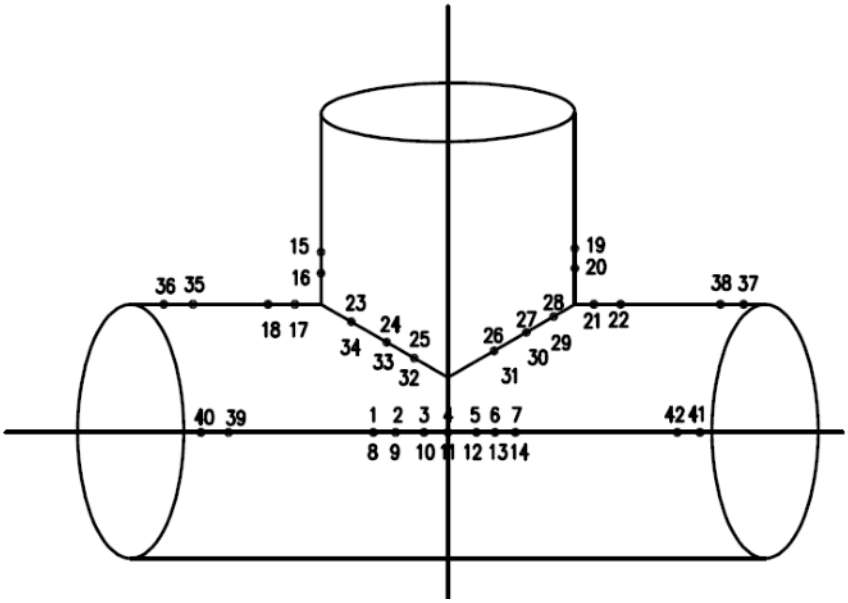

Location	Thickness (mm)	Location	Thickness (mm)	Location	Thickness (mm)
1		15		29	
2		16		30	
3		17		31	
4		18		32	
5		19		33	
6		20		34	
7		21		35	
8		22		36	
9		23		37	
10		24		38	
11		25		39	
12		26		40	
13		27		41	
14		28		42	

THICKNESS MEASUREMENT REPORT FOR ELBOW

Date: dd:mm:yyyy

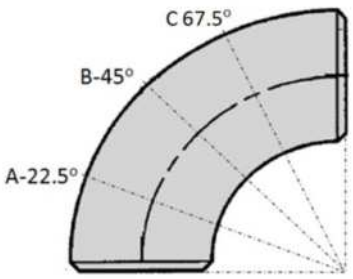

90 ° Elbow

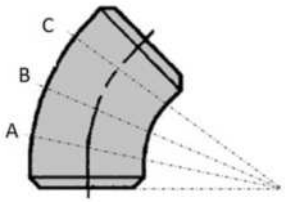

Less than 90°

Measurement (Extrodus) points

Angle	A	B	C
90	22.50°	45.00°	67.50°
60	15.00°	30.00°	45.00°
45	11.25°	22.50°	33.75°
30	NA	15.00°	NA

Description of item :
Material Spec :
Material Code :

No	Wall thickness at ends		Wall Thickness at angle			Remarks
	End 1	End 2	A	B	C	
1.						
2.						
3.						
4.						
5.						
6.						
7.						
8.						
9.						
10.						
11.						
12.						
13.						
14.						
15.						

THICKNESS MEASUREMENT REPORT FOR REDUCER

Date: dd:mm:yyyy

PO Number:
Description of Material:
Size:
Material Spec. & Grade
Work order/DU:

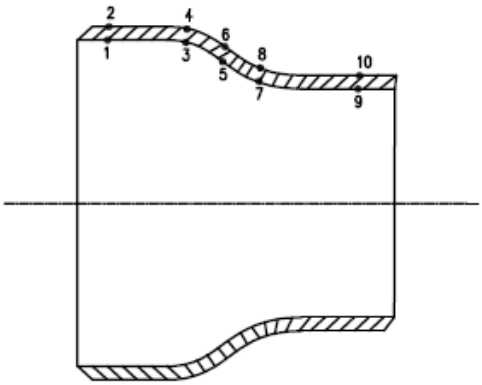

CONCENTRIC REDUCER

LOCATION	THICKNESS(mm)
1	
2	
3	
4	
5	
6	
7	
8	
9	
10	

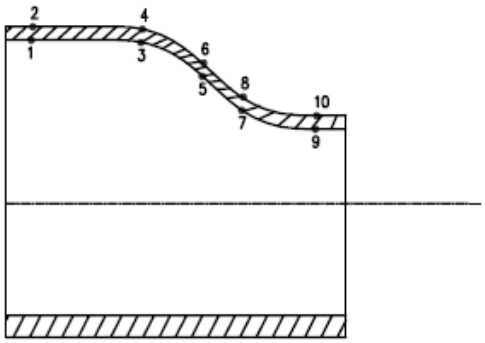

ECCENTRIC REDUCER

LOCATION	THICKNESS(mm)
1	
2	
3	
4	
5	
6	
7	
8	
9	
10	

BHEL/ Trichy, 620 014

Annexure-II

PRE DESPATCH INSPECTION REPORT

Date: dd:mm:yyyy

S NO	PO NO & PO SI NO	MATERIAL CODE / WORK ORDER NO	ITEM DESCRIPTION	QUANTITY	WEIGHT (MT)

Observations (Photos shall be enclosed)

PDI Performed by

(BHEL/BHEL AIA Sign & Seal)

DRAWING NO: 3-12-000-16318

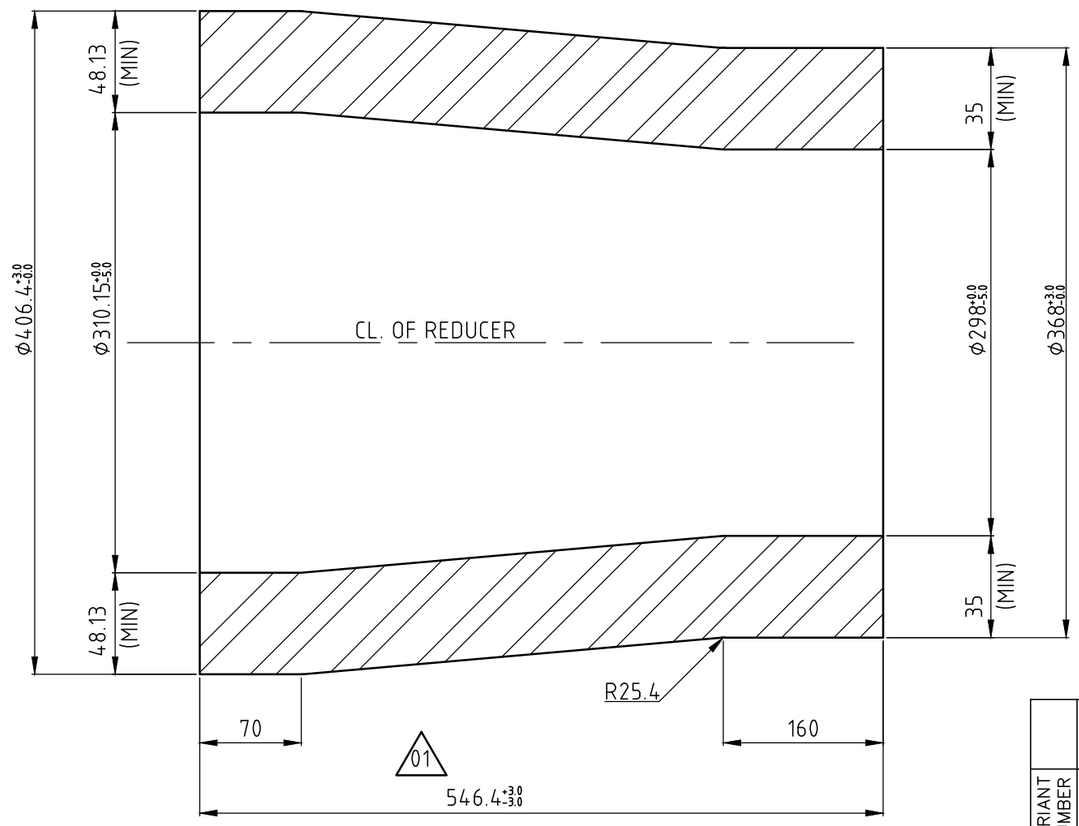

NOTES:

01. DESIGN, MANUFACTURE AND INSPECT AS PER IBR.

02. ALL DIMENSIONS SHOWN ARE FINISHED DIMENSIONS.

03. NORMALISING & TEMPERING IS TO BE DONE AFTER HOT FORMING

04. FITTING SPECIFICATION : SA234WP12

05. THE FORMED REDUCER SHALL BE SUPPLIED WITH PLAIN ENDS.

FITTING MATERIAL CODE : 921170010022

VARIANT NUMBER	ITEM NUMBER	DESCRIPTION	STD	DRAWING NUMBER	ITEM NO	MATERIAL CODE	A/C/P	UNIT	UNIT WEIGHT	GS
							A		212.000	
						SA234WP12				
					VAR NO	MATERIAL SPECN		DI	QUANTITY	

REV	DATE	ALTERED : T.SHYJU
01	08.08.23	CHD & APPD: R.SAI KUMAR
ZONE	LENGTH AND WEIGHT CORRECTED.	

CAUTION: The information on this document is the property of BHARAT HEAVY ELECTRICALS LTD. It must not be used directly or indirectly in any way detrimental to the interest of the company.

TYPE OF PRODUCT
OR NAME OF
CUSTOMER/PROJECT

Bharat Heavy Electricals Ltd
UNIT: HIGH PRESSURE BOILER PLANT
TIRUCHIRAPALLI – 620014
355–055

	NAME	SIGNATURE	DATE
DRN	T.SHYJU		13.07.2023
CHD	SAI KUMAR		13.07.2023
APPD	NIRMAL RAJ		13.07.2023

DEPT	PP	ALL DIMENSIONS ARE IN MM	PROJECTION	SCALE	WEIGHT (Kg)	REF TO ASSY / OLD DWG
CODE	121			N.T.S	212.000	

TITLE
REDUCER RAW FORMING
D406.4x55(NOM) / D368x40(NOM)

DRAWING NO : 3-12-000-16318

REV 01

DRAWING NO: 3-12-000-16319

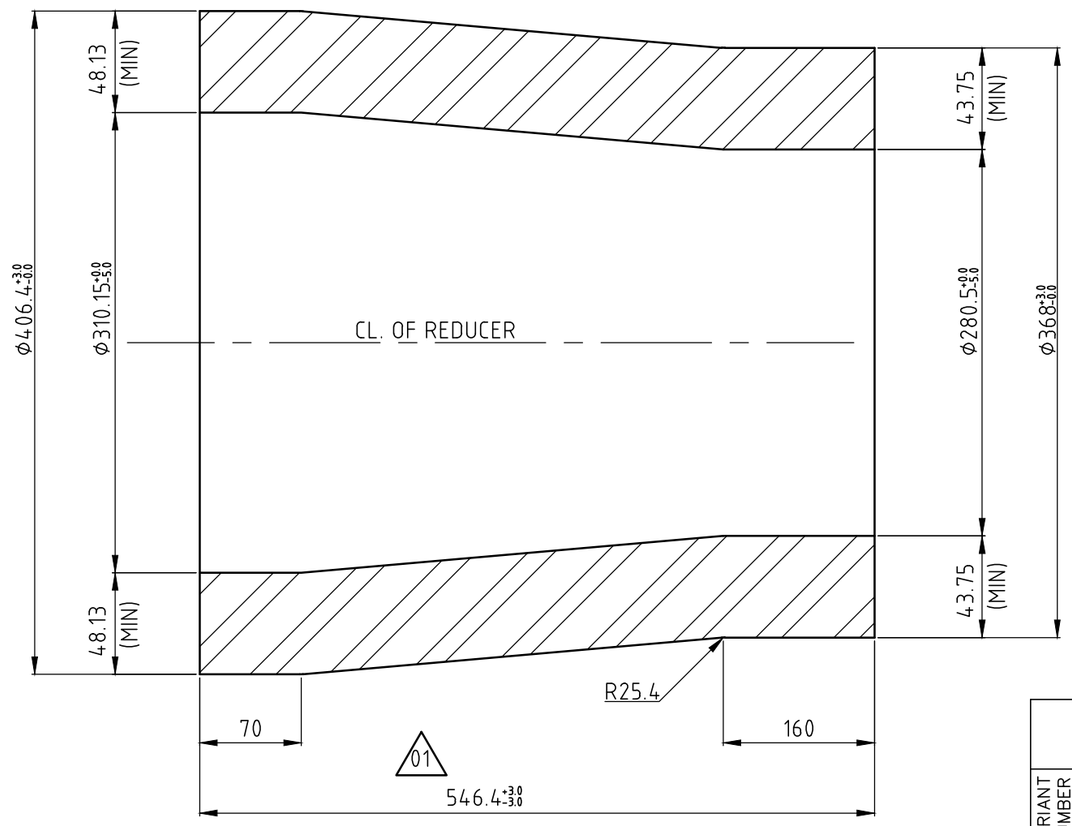

NOTES:

01. DESIGN, MANUFACTURE AND INSPECT AS PER IBR.

02. ALL DIMENSIONS SHOWN ARE FINISHED DIMENSIONS.

03. NORMALISING & TEMPERING IS TO BE DONE AFTER HOT FORMING

04. FITTING SPECIFICATION : SA234WP12

05. THE FORMED REDUCER SHALL BE SUPPLIED WITH PLAIN ENDS.

FITTING MATERIAL CODE : 921170010023

VARIANT NUMBER	ITEM NUMBER	DESCRIPTION	STD	DRAWING NUMBER	ITEM NO	MATERIAL CODE	A/C/P	UNIT	UNIT WEIGHT	GS
							A		233.000	
						SA234WP12				
					VAR NO	MATERIAL SPECN		DI	QUANTITY	

REV	DATE	ALTERED : T.SHYJU
01	08.08.23	CHD & APPD: R.SAI KUMAR
ZONE	LENGTH AND WEIGHT CORRECTED.	

CAUTION: The information on this document is the property of BHARAT HEAVY ELECTRICALS LTD. It must not be used directly or indirectly in any way detrimental to the interest of the company.

TYPE OF PRODUCT OR NAME OF CUSTOMER/PROJECT

Bharat Heavy Electricals Ltd
UNIT: HIGH PRESSURE BOILER PLANT
TIRUCHIRAPALLI – 620014
355–055

	NAME	SIGNATURE	DATE
DRN	T.SHYJU		13.07.2023
CHD	SAI KUMAR		13.07.2023
APPD	NIRMAL RAJ		13.07.2023

DEPT	PP	ALL DIMENSIONS ARE IN MM	PROJECTION	SCALE	WEIGHT (Kg)	REF TO ASSY / OLD DWG
CODE	121			N.T.S	233.000	

TITLE
REDUCER RAW FORMING
D406.4x55(NOM) / D368x50(NOM)

DRAWING NO : 3-12-000-16319

REV 01

DRAWING NO: 3-12-000-16320

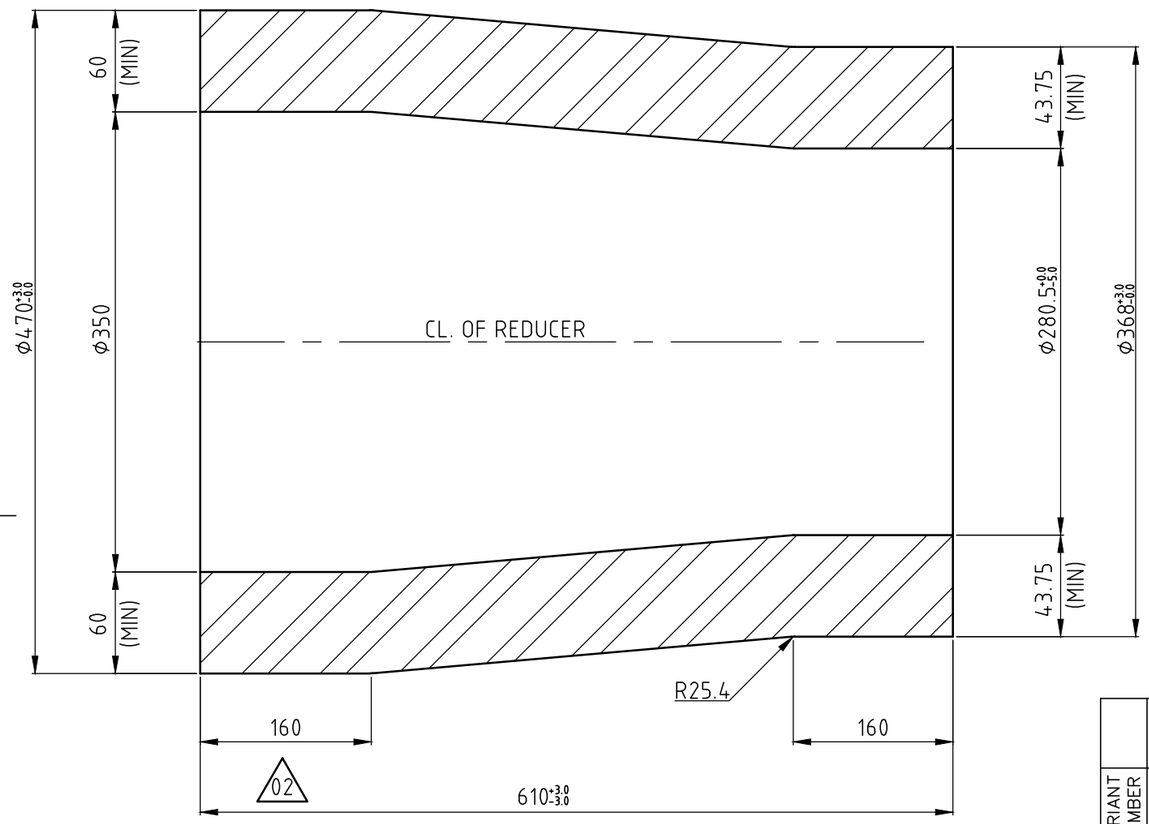

NOTES:

01. DESIGN, MANUFACTURE AND INSPECT AS PER IBR.

02. ALL DIMENSIONS SHOWN ARE FINISHED DIMENSIONS.

03. NORMALISING & TEMPERING IS TO BE DONE AFTER HOT FORMING

04. FITTING SPECIFICATION : SA234WP22 (01)

05. THE FORMED REDUCER SHALL BE SUPPLIED WITH PLAIN ENDS.

FITTING MATERIAL CODE : 921170010024

VARIANT NUMBER	ITEM NUMBER	DESCRIPTION	STD	DRAWING NUMBER	ITEM NO	MATERIAL CODE	A/C/P	UNIT	UNIT WEIGHT	GS
						SA234WP22	A		293.500	
					VAR NO	MATERIAL SPECN		DI	QUANTITY	

REV	DATE	ALTERED :	M BASEEM
02	28.08.23	CHD & APPD:	R.SAI KUMAR
ZONE	DIMENSION REVISED.		
REV	DATE	ALTERED :	T.SHYJU
01	08.08.23	CHD & APPD:	R.SAI KUMAR
ZONE	MATL.SPEC ,LENGTH AND WEIGHT CORRECTED.		

CAUTION: The information on this document is the property of BHARAT HEAVY ELECTRICALS LTD. It must not be used directly or indirectly in any way detrimental to the interest of the company.

TYPE OF PRODUCT
OR NAME OF
CUSTOMER/PROJECT

355-055

Bharat Heavy Electricals Ltd
UNIT: HIGH PRESSURE BOILER PLANT
TIRUCHIRAPALLI – 620014

	NAME	SIGNATURE	DATE
DRN	T.SHYJU		13.07.2023
CHD	SAI KUMAR		13.07.2023
APPD	NIRMAL RAJ		13.07.2023

DEPT	CODE	ALL DIMENSIONS ARE IN MM	PROJECTION	SCALE	WEIGHT (Kg)	REF TO ASSY / OLD DWG
PP	121			N.T.S	293.500	

TITLE
REDUCER RAW FORMING
D470X60/D368X50(NOM)

DRAWING NO : 3-12-000-16320

REV 02

DRAWING NO: 3-24-815-03978

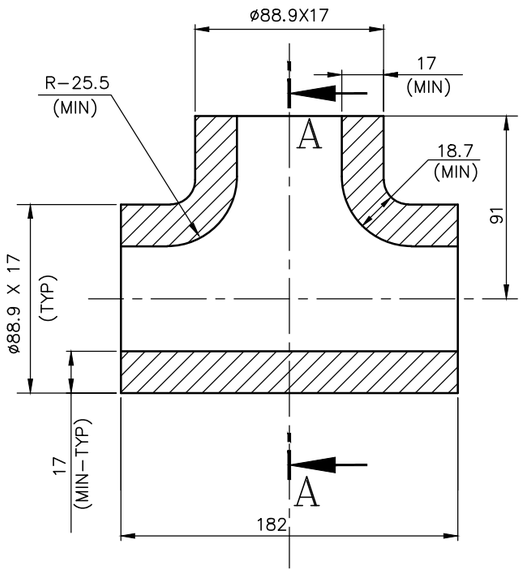

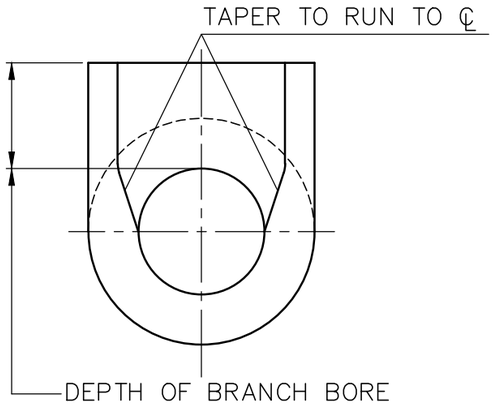

SECTION-AA

12.5

NOTES:

01. DESIGN MANUFACTURE AND INSPECTION AS PER IBR.
02. FOR TOLERANCES REFER STD.DRG.NO: 4-03-000-00053.
03. ALL DIMENSIONS SHOWN ARE FINISHED DIMENSIONS IN mm.
04. NORMALISING AND TEMPERING IS TO BE DONE AFTER HOT FORMING.
05. FITTING SPECIFICATION : SA234 WP91
06. THE FORMED TEE SHALL BE SUPPLIED WITH PLAIN ENDS.

VARIANT NUMBER	ITEM NUMBER	DESCRIPTION	STD	DRAWING NUMBER			A/C/P	UNIT		GS
		BW EQUAL TEE D88.9 X 17			ITEM NO	921050300000	A		8.0	
					VAR NO	SA234 WP91		DI	QUANTITY	

REV	DATE	ALTERED : N.FAZIL
01	04.06.16	CHD & APPD:K.SRIDHARAN
ZONE	-RADIUS REVISED -SECTION-AA INCLUDED -NOTES ADDED.	

CAUTION: The information on this document is the property of BHARAT HEAVY ELECTRICALS LTD. It must not be used directly or indirectly in any way detrimental to the interest of the company.

TYPE OF PRODUCT OR NAME OF CUSTOMER/PROJECT

355-055

Bharat Heavy Electricals Ltd
UNIT: HIGH PRESSURE BOILER PLANT
TIRUCHIRAPALLI - 620014

	NAME	SIGNATURE	DATE
DRN	P.R.R		07.09.2015
CHD	V.G.S		07.09.2015
APPD	K.S.		07.09.2015

DEPT	CODE	ALL DIMENSIONS ARE IN MM	PROJECTION	SCALE	WEIGHT (Kg)	REF TO ASSY / OLD DWG
BM	121			NTS	8.00	3-24-815-02612

TITLE
BW EQUAL TEE -(RAW FORMING)
D88.9 x 17(THK)

DRAWING NO : 3-24-815-03978

REV 01

CAUTION: THE INFMN ON THIS DOCUMENT IS THE PROPERTY OF BHEL. IT MUST NOT BE USED DIRECTLY OR INDIRECTLY IN ANY WAY DETRIMENTAL TO THE INTEREST OF BHEL

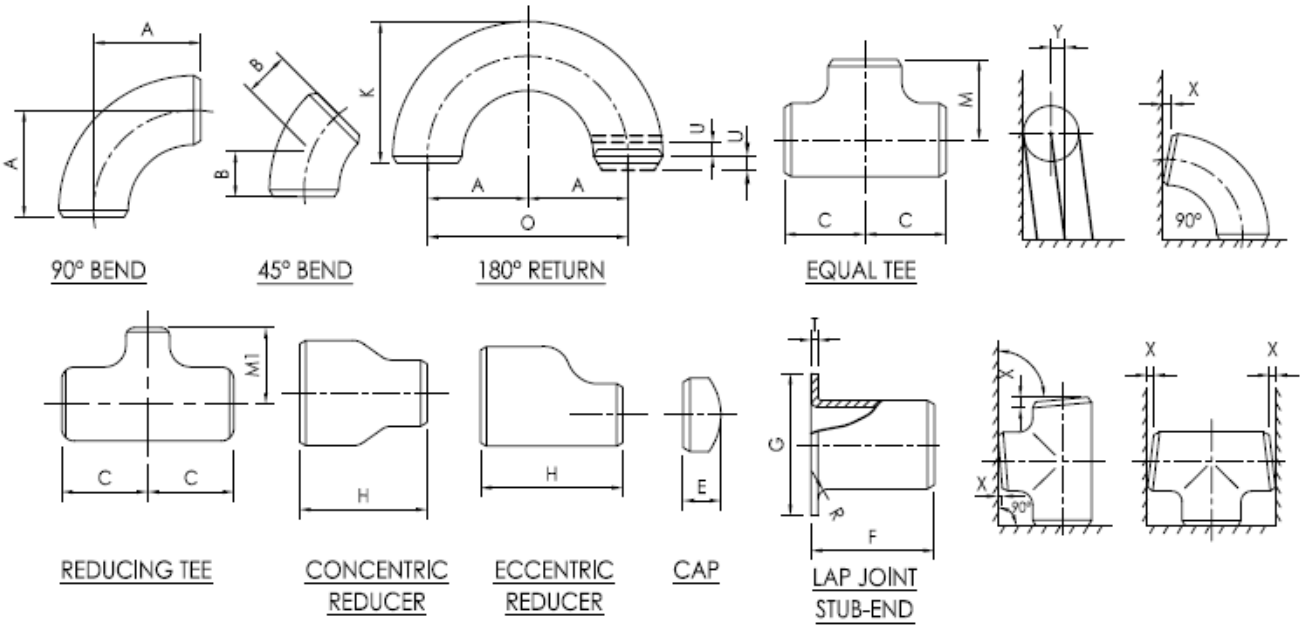

OFF-SQUARE TOLERANCES		
NOMINAL SIZE OF FITTING	OFF SQUARE TOLERANCE, X	OFF SQUARE TOLERANCE, Y
UP TO AND INCLUDING 100	0.8	1.6
125 TO 150	1.2	2.4
200 TO 550	1.6	3.2
600 & ABOVE	3.2	6.4

ALL FITTINGS				90°&45° ELBOWS AND TEES	REDUCER	180° RETURNS			CAPS	LAP-JOINT		STUB END	
DN.	O.D AT BEVEL	I.D AT END	WALL THICK NESS	CENTER TO END A,B,C,M,M1	OVERALL LENGTH H	CENTER TO CENTER O	BACK TO FACE K	ALIGN-MENT OF END U	OVER ALL LENGTH E	END TO END F	RADIUS R	DIA OF LAP G	THICKNESS OF LAP
15 TO 65	+1.6 -0.8	±0.8	NOT LESS THAN 87 1/2% OF NOMINAL THICKNESS	±1.6	±1.6	±6.4	±6.4	±0.8	±3.2	±1.6	+0 -0.8	+0 -0.8	+1.6 -0
80 TO 90	±1.6	±1.6		±1.6	±1.6	±6.4	±6.4	±0.8	±3.2	±1.6	+0 -0.8	+0 -0.8	+1.6 -0
100	±1.6	±1.6		±1.6	±1.6	±6.4	±6.4	±0.8	±3.2	±1.6	+0 -0.8	+0 -0.8	+1.6 -0
125 TO 200	+2.4 -1.6	±1.6		±1.6	±1.6	±6.4	±6.4	±0.8	±6.4	±1.6	+0 -0.8	+0 -0.8	+1.6 -0
250 TO 400	+4.0 -3.2	±3.2		±2.4	±2.4	±9.5	±6.4	±1.6	±6.4	±2.4	+0 -1.6	+0 -1.6	+1.6 -0
500 & ABOVE	+6.4 -4.8	±4.8		±2.4	±2.4	±9.5	±6.4	±1.6	±6.4	±2.4	+0 -1.6	+0 -1.6	+1.6 -0

Bharat Heavy Electricals Ltd
UNIT: HIGH PRESSURE BOILER PLANT
TIRUCHIRAPALLI – 620014
355–056

	NAME	SIGNATURE	DATE
DRN	NIRMAL RAJ		09.03.2009
CHD	NIRMAL RAJ		10.03.2009
APPD	KIRUBAKARAN		10.03.2009

DEPT PP	ALL DIMENSIONS ARE IN MM	PROJECTION	SCALE	WEIGHT (Kg)	REF TO ASSY / OLD DWG
CODE 121			N.T.S	—	4-80-301-26192

TITLE: TOLERANCES ON FITTINGS

DRAWING NO : 4-03-000-00053

REV 00

Revision record:
Rev: 00: Supersedes TDC: 5:019 & can be used wherever the old TDC is specified.
Rev: 01: New materials, IGCsT added. UT, Hardness requirement modified. LPI, MPI requirement added.
Rev: 02: Flatness requirement added in clause no: 5.0
Rev: 03: TDC for, Pipe Fittings for NTPC contracts (TDC 0 427), Pipe fittings indigenous supply (TDC 0 422) has been merged with this TDC and named as Butt Welded formed pipe fittings. Cl. 2.0 General removed, scope limited to IBR only and other clauses renumbered. Limits of carbon modified. Aligned with NTPC requirements.
Rev: 04: Restriction in size below 2 in. removed based on Spares requirement.
Rev: 05: Cl: 2.0, 3.0, Revised.
Rev: 06: Product Heading changed. Cl 1.0 Scope and Raw material Sourcing added. Cl.2.0 & 3.0 merged and totally revised. Cl. 4.0, 5.0, 6.0 modified and renumbered.
Rev: 07 Dt: 10/11/2012: Cl 1.0, 2.0 & 5.0 Modified for SS material.
Rev: 08: Dt: 22/09/2017 Title, Clauses 1, 2, 5 & 6 modified; Gr 92 fittings requirements included in Cl 1, 2, 5 & 6; Creep requirements added in Clause 3; Design proof test requirement, if not done earlier, added in general notes..
Rev: 09: Dt: 21/11/2017 - Cl. 3 & 6.a (15) modified.
Rev: 10: Dt: 27/03/2023 –Clause 1- Code specification ASTM A234 has been removed, Clause 2.2 under 'Heat treatment after forming' in the Material tabulation, AS-ASTM A234 WP92 replaced with AS-SA234 WP92

1.0 MATERIAL SPECIFICATIONS:

All the codes, standards, specifications, drawings & procedures, etc., referred in this TDC shall be of latest revision as on the date of Enquiry/Purchase Order, whichever is earlier, unless specified otherwise.

- Fittings : Seamless Fittings only (Fittings made by welding are prohibited).
- ASME : Carbon Steel (CS): SA105, SA234; Alloy Steel(AS): SA 234,SA182, Stainless Steel(SS): SA182, SA403[g]
- Additional Requirements & grades) : As listed below (Supplementary to above material specifications/ standards
- Grade, Size and Quantity : As per Purchase order &/ Drawing.

2.0 MANUFACTURING & TESTING REQUIREMENTS:

2.1 Machined Fittings (fittings machined from castings are prohibited; **Max size permitted 4") – Reducers, Couplings & End caps**

Starting material Rolled or Forged Bars, Killed steel	Heat treatment *as* per starting material specifications	CS – Normalised AS – Normalised & Tempered SS – Solution Annealed
	NDE – UT[d]	To be done after Heat treatment. For size above 40 mm – to be done as per ASTM A388 Acceptance to - ASME Sec.VIII Div.2 Cl.3.3.4
Finished fitting (after machining to required size)	Heat Treatment	Not required.
	NDE (for all sizes)	• MT (100%)- Procedure - As per ASTM E709. No linear indications (surface NDE indication whose length is ≥ three times its width) are acceptable. For WP91/F91 & WP92/F92 Wet MPI shall be done. • LPI – **SS**: Shall be done as per ASTM E165. No linear indications are acceptable. • **SS:** Finished fittings shall be checked for radioactive contamination and reported. Survey meter shall be used to measure at 5 cm near the surface. Acceptance limits: Shall be less than 0.1 milli Rontgen (MR) per hr or 1 micro Sievert per hr.
	Hardness	WP5 - 217 HBW max. SA105 – 137 HBW to 187 HBW.

		WPB, WPC, WP11/F11, WP12/F12, WP22/F22 – 197 HBW max. WP91/F91 - 195 HBW to 248 HBW – 100% to be checked WP92/F92 – 191 HBW to 269 HBW – 100% to be checked.
	Dimension	ASME B16.9 & ASME B16.11, As per Engineering Drawing
	Bend Test (for IBR items)	Specimen: 19mm. Thickness (t) x 25.4mm width - cold bent 180 deg. over thin section without fracture, mandrel radius: CS :<=6.35 mm. AS, SS : <=1.5 times specimen thick.

2.2 Seamless Formed Fittings – Elbows, Tees, Reducers, Dished End (End Cover/ *Cap*)

<table>
<tr><td>Starting material:</td><td>Heat treatment as per starting material specifications</td><td>CS – Normalised
AS – Normalised & Tempered
SS – Solution Annealed</td></tr>
<tr><td>1)Tube & Pipe</td><td>NDE – UT[d]</td><td>Shall be done as per - ASTM E213 with longitudinal notch of 5% wall thickness with min. 0.3 mm and max.1.5 mm. Actual measured notch depth to be specified in Test Certificate.</td></tr>
<tr><td>2)Forged blank (For end covers)</td><td>NDE – UT[d]</td><td>For size above 40 mm
UT shall be done as per - ASTM A388
In acceptance to - ASME Sec.VIII Div.2 Cl.3.3.4</td></tr>
<tr><td>3) Plate</td><td>NDE – UT[d]</td><td>For size above 10mm
SA 578, Acceptance Level - B</td></tr>
<tr><td rowspan="6">Finished fitting (cold/hot forming)</td><td>Heat treatment after forming</td><td>Shall be done as per SA234/SA403.
When Heat Treatment is required it shall be done as per the below table values:
<table>
<tr><th rowspan="2">Material</th><th colspan="2">Heat Treatment Temp,C</th><th colspan="2">Soaking time, hr/in</th></tr>
<tr><th>Normalising</th><th>Tempering</th><th>Normalising</th><th>Tempering</th></tr>
<tr><td>CS-WPB & WPC</td><td>870-900</td><td>-</td><td>1/2</td><td>-</td></tr>
<tr><td>AS-WP11, WP12</td><td>920-950</td><td>655+- 15</td><td>1/2</td><td>1</td></tr>
<tr><td>AS-WP5, WP22</td><td>920-950</td><td>695+- 15</td><td>1/2</td><td>1</td></tr>
<tr><td>AS-WP91</td><td>1040-1080</td><td>750-780</td><td>1/2</td><td>1</td></tr>
<tr><td>AS-SA234 WP92</td><td>1040-1080</td><td>750-780</td><td>1/2</td><td>1</td></tr>
</table>
Stainless Steel: All grades - Solution Annealed: 1050-1100 Deg C
Soaking time: ½ hr per inch with minimum 15 minutes.
Note
1.Normalising shall be done for a minimum time of 30 min while tempering to be done for a minimum time of 60 min for all above materials except SS.</td></tr>
<tr><td>NDE (for all sizes) – Except for Plate formed Dished end</td><td>• MT (100%) - Shall be as per - ASTM E709 No linear indications are acceptable. For WP91 & WP92 Wet MPI shall be done.
• LPI – SS: Shall be done as per ASTM E165. No linear indications are acceptable.
• SS: Finished fittings shall be checked for radioactive contamination and reported. Survey meter shall be used to measure at 5cm near the surface. Acceptance limits: Shall be less than 0.1 milli Rontgen (MR) per hr or 1 micro Sievert per hr.</td></tr>
<tr><td>NDE–for Plate formed Dished end</td><td>For Plate Formed Dished end – 100% MT as per - ASTM E709 on both inner and outer surfaces of Knuckle radius and weld ends. No linear indications are acceptable.</td></tr>
<tr><td rowspan="2">NDE – UT[d] For OD > or=219mm & W.T >or= 6mm</td><td>If made from Pipe & Tube –
Shall be done as per - ASTM E213 with longitudinal notch of 5% wall thickness with max.1.5mm and min. 0.3mm. Actual measured notch depth to be specified in Test Certificate.</td></tr>
<tr><td>If made from Forging Shall be as per - ASTM A388
In acceptance to - ASME Sec.VIII Div.2 Cl.3.3.4</td></tr>
</table>

		If made form Plate shall be as per A578 Level-B
	Hardness	WP5 – 217 HBW max. WPB, WPC, WP11, WP12, WP22 – 197 HBW max. WP91 - 195 HBW to 248 HBW – 100% to be checked. WP92 – 191-269 HBW max. – 100% to be checked.
	Dimension	ASME B16.9 & ASME B16.11, As per Engineering drawing.
	Bend Test (if starting material is forged blank) (for IBR items)	Specimen: 25.4 mm x 19 mm thick - cold bent 180 deg. over thin section without fracture, internal radius of bend: CS :<=6.35 mm. AS, SS: <=1.5 times specimen thick.

2.3 Forged Fittings – Elbows, Tees, Reducers, Couplings, Flanges & Dished End (End Cover / *Cap*)

Shall be forged to the shape with a minimum forge reduction ratio of 1:4. Fitting shall not be machined from a forged block.

<table>
<tr><td>Starting material: Rolled or forged Bars, blooms, billets and Killed steel</td><td>Heat treatment as per starting material specifications</td><td>CS – Normalised
AS – Normalised & Tempered
SS – Solution Annealed</td></tr>
<tr><td>1)Tube & Pipe, forged pipe/hollow</td><td>NDE – UTd</td><td>Shall be done as per - ASTM E213 with longitudinal notch of 5% wall thickness with min. 0.3 mm and max.1.5 mm. Actual measured notch depth to be specified in Test Certificate.</td></tr>
<tr><td>2)Forged blank (For end covers)</td><td>NDE – UTd</td><td>For size above 40 mm
UT shall be done as per - ASTM A388
In acceptance to - ASME Sec.VIII Div.2 Cl.3.3.4</td></tr>
<tr><td>3) Plate</td><td>NDE – UTd</td><td>For size above 10mm
SA 578, Acceptance Level - B</td></tr>
<tr><td>After forging (cold/hot forging)</td><td>Heat treatment</td><td>Shall be done as per SA105/SA182.
When Heat Treatment is required it shall be done as per the below table values:
<table>
<tr><th rowspan="2">Material</th><th colspan="2">Heat Treatment Temp,C</th><th colspan="2">Soaking time, hr/in</th></tr>
<tr><th>Normalising</th><th>Tempering</th><th>Normalising</th><th>Tempering</th></tr>
<tr><td>CS- SA105</td><td>870-900</td><td>-</td><td>1/2</td><td>-</td></tr>
<tr><td>AS- SA182 F11 & F12</td><td>920-950</td><td>655+- 15</td><td>1/2</td><td>1</td></tr>
<tr><td>AS- SA182 F5 & F22</td><td>920-950</td><td>695+- 15</td><td>1/2</td><td>1</td></tr>
<tr><td>AS- SA182 F91 & F92</td><td>1040-1080</td><td>750-780</td><td>1/2</td><td>1</td></tr>
</table>
Stainless Steel: All grades - Solution Annealed: 1050-1100 Deg C Soaking time: ½ hr per inch with minimum 15 minutes.
Note
1.Normalising shall be done for a minimum time of 30 min while tempering to be done for a minimum time of 60 min for all above materials except SS.</td></tr>
<tr><td rowspan="2">Finished fitting</td><td>NDE – UT[d] For OD > or = 219mm</td><td>UT shall be done as per - ASTM A388
In Acceptance to - ASME Sec.VIII Div.2 Cl.3.3.4</td></tr>
<tr><td>NDE (for all sizes)</td><td>• MT-(100%) Shall be done as per ASTM E709.
No linear indications are acceptable.
For F91 & F92 Wet MPI shall be done.
• LPI – SS: Shall be done as per ASTM E165. No linear indications are acceptable.
• SS: Finished fittings shall be checked for radioactive contamination and reported. Survey meter shall be used to measure at 5cm near the surface.</td></tr>
</table>

		Acceptance limits: Shall be less than 0.1 milli Rontgen (MR) per hr or 1 micro Sievert per hr.
	Hardness	SA105 – 137 HBW to 187 HBW. F5 – 143-217 HBW; F9 – 179-217 HBW max. F11, F12 – 143 HBW to 207 HBW, F22 – 156-207 HBW max. F91 - 195 HBW to 248 HBW – 100% to be checked SA182 F92 – 191- 269 HBW max. – 100% to be checked.
	Dimension	ASME B16.5 & ASME B16.11, As per engineering drawing.
	Bend Test (for IBR items)	Specimen: 19mm. Thickness (t) x 25.4mm width - cold bent 180 deg. over thin section without fracture, mandrel radius: CS :<=6.35 mm. AS, SS : <=1.5 times specimen thick.

General requirements:

a. Product analysis as per S50 of ASTM A960 is required.
b. Carbon < or = 0.25% for WPB (all thickness), WPC and SA105 (thickness < or = 20mm)
c. Carbon < or = 0.30% for WPC and SA105 (thickness > 20mm)
d. If UT not done on the starting material, the same shall be done by the fitting manufacturers before forming / fabrication.
e. Mechanical Testing including hardness testing: Quantum of testing as per IBR (except for hardness testing of Gr 91 & 92) – Test samples shall be tested in the Heat treatment of fitting delivered condition. For Gr 91 & 92 fittings, hardness testing shall be done on 100% of fittings being supplied (either on ends or surface).
f. Pipe made from plate as a starting material and long seam welded should not be used.
g. All raw materials used in steel making including incoming scrap shall be checked by supplier to ensure freedom from radioactivity (applicable for SS material only).
h. Design proof test as per ASME B16.9 should be carried out for the geometric shape and size ordered if already not done.

3.0 Creep testing shall be carried out as per SIP:RM:01 (latest revision) whenever indicated in the Enquiry/Purchase Order/Engineering Drawing.

4.0 REPAIRS AND FINISH:

The products shall be free from injurious defects like crack,seam etc. with workman like finish. Repairs involving fusion welding is prohibited. Surface defects can be removed by mechanical means and the defective areas shall be merged with adjacent surface. Minimum thickness after repair shall meet the drawing / specification requirements. Flatness on curved surfaces of fittings shall be limited to 6% of nominal OD. Thickness : Outer Diameter and Transition : Variation shall be merged smooth to min 1:4 taper.

5.0 MARKING, PRESERVATION AND PACKING:

The following details to be neccessarily hot stamped 1. Heat number, 2. Inspecting Authority Seal 3. Specification Grade, code case (if applicable) and Size, 4. Company Seal and "B16"(for ANSI fittings).
The rest to be marked as per Specification.
Adittionally The following to be painted :
for OD > 108mm : PO No., Sl. No., Specification ,"BHEL-Tiruchirappalli", Drawing.No. & Weight
for OD <= 108mm : Sl. No., Specification
CS & AS fittings to be rust preventive coated after shot blasting inside & out side & packed to avoid damage.
SS fittings to be surface treated (Pickling, Passivation) as per ASTM A380 both inside and outside.

6.0 INSPECTION AND CERTIFICATION:

a. Products must be inspected at works and the test certificates must be countersigned by the Inspecting Authority as indicated below:

Imported items: Inspecting Authority approved by IBR for the country of origin with Form III-C (for all fittings except dished ends), Form III-I (for dished ends) as per IBR and additonal MTC as given below.

Indigenously supplied IBR items: Director of Boilers/Chief Inspector of Boilers/Inspecting Authority approved by IBR, for the respective state in India with Form III-C (for all fittings except dished ends), Form III-I (for dished ends) as per IBR and additonal MTC as given below.

Separate Manufacturer's Test certificate (MTC) in English language with following details, shall accompany all products:

1. Purchase Order No.(BHEL),TDC No. & Test certificate number
2. Specification, Grade with applicable year of code & code case (if applicable), Heat Number, Drawing No.,Quantity & Size
3. Supplier of the steel used in making the finished product
4. Forming process, Chemistry including incidental elements - Heat wise.
5. Heat treatment details: temperature, soaking time, cooling medium (for quenching).
6. Mechanical test results, Hardness, NDE test results with reference & acceptance standard.
7. Detailed NDE reports for MT, LPI and UT shall be submitted along with MTC.
8. Photomicrograph at 400X magnification for F91, WP91, F92 & WP92 in final Heat treated condition of fittings.
9. PMI certification for all Alloy steels fittings.
10. Print of the stamp of Inspecting Authority, which is used in the fitting.
11. Dimensional reports for each product
12. Repair details if any.
13. Certified copy of TC for starting material.
14. Guarantee certificate for retainability of hydrostatic test pressure corresponding to that of matching pipe of equivalent material or Hydro static test report as applicable.
15. Creep test report as per SIP:RM:01 (latest revision) whenever indicated in the Enquiry/Purchase Order/Engineering Drawing.

1. For CE-marking items the TCs with details specified above shall be submitted as per EN-10204 (latest) For pressure parts test certificates of type 3.1 or 3.2 is acceptable.

Type 3.1 – Suppliers shall have ISO 9001-2008/2015 (with validity as applicable) certification certified by Notified Body recognized by European community and test certificate certified by suppliers authorized inspection representative.

Type 3.2 – Components inspected and test certificates certified by both the supplier's authorized inspection representative and Notified Body recognized by European community.

2. For non pressure parts test certificates of type 2.2 is acceptable.
   Type 2.2 – suppliers test certificates signed by suppliers authorized inspection representative with test results as required by this TDC.

b. For SS: Measured Radioactivity levels at 5cm from the surface of the fitting shall be reported in the Mill Test Certificate (not to be recorded in IBR Form).

T. Sriharsha 27/03/23	27-03-2023	27/03/23	27/3/23	27/3/23	27/03/2023
T. Sriharsha	Deepesh	S Anand Kumar	N Nirmal Raj	T Pandian	JVV Aruna Kumar
Manager/BE/Quality	Sr Manager/QA	Sr. DGM/MM	DGM/PE/FB	AGM/QC	AGM/QA & BE
Prepared By	**Reviewed By**				**Approved By**

BHARAT HEAVY ELECTRICALS LIMITED – TRICHY
PURCHASE / MM / C&F

Ref/Enquiry No: 1402600001 Date: 07-01-2026

ANNEXURE-A

ENQUIRY CONDITIONS FOR SUPPLY OF CS & AS FORMED FITTINGS AS PER BHEL DRAWINGS, TDC: 423 Rev 10 AND SPECIFICATON

Note: ***This Annexure has to be mandatorily filled & signed by the manufacturer (or) mill and submitted along with Technical Bid.***

Any deviation to the below mentioned terms shall be stated specifically in the comments column for each term and also in case of acceptance to our terms, it will be construed that the whole term is understood and agreed in totality without any deviation (if otherwise mentioned).

Sl No	BHEL Requirements	Supplier's Acceptance
1.	**Material specification:** a. **Supply of CS & AS Formed Fittings shall be as per BHEL Drawings, TDC 423 Rev 10, ANSI Standard, Approved SQP and specification** to BHEL, Trichy on F.O.R. Destination Basis. Unloading of materials at Destination shall be in BHEL's scope.	
	b. Supply shall confirm to the above specification and strictly as per **TDC: 423 /REV.10 and BHEL drawings.**	
	c. **In case of deviation, pls mention the specific clause no of TDC (Technical delivery conditions) and the specific deviation against it.** Pls avoid mentioning any additional points other than what is required as per the TDC. For deviations separate sheet may also be attached.	
	d. Supply Quantity shall be as per Tender	
2.	Submit your firm competitive offer rate per Number (basic price & freight) with best possible delivery on **FOR – HPBP, BHEL Trichy**. The quoted prices shall be inclusive of all charges (like testing charges, Freight, etc.).	
3.	**Inspection & Testing:** Inspection and certification shall be carried out as per **TDC: 423 REV 10 and Approved SQP** and documents shall be submitted along with the supply in line with the above TDC.	
4.	**Pre-qualifying requirement:** In addition to the TDC requirements, suppliers shall fill and submit the Pre-Qualification Requirements (**Pre-Qualification Criteria for the procurement of CS & AS Formed Fittings through Open Tender)** for the above procurement enclosed herewith. Pls submit all the required documents in line with the respective PQR. The offers of the suppliers who fail to do so will be liable for rejection.	
5.	**Payment term:** 90 days from the date of acceptance of materials	
6.	**MSME Suppliers** may opt for the below payment terms. i. **Micro & Small** - Within 45 days from the date of receipt of vehicle at BHEL/stores ii. **Medium** - Within 60 days from the date of acceptance of materials i. In case of objection/requirements raised by BHEL due to Non availability/ Discrepancy in invoice/MTC/ Dispatch documents, Rejection of material etc due date shall be calculated from the date of closure of objection/requirements by the supplier.	
7.	The offer shall clearly indicate delivery period in **fixed number of weeks/Months** from the date of Purchase Order. **Our required delivery schedule is 120 days from PO. Supplier shall take a note of the same and specifically confirm the delivery schedule.** Notwithstanding anything to the contrary, including, but not limited to, provisions relating to extension of time and compensation/or delay, time shall be the essence of the Contract.	

8.	In case of MSE supplier		
9.	In case of MSE supplier GeM Seller ID	**MSE status : Micro/Small/Medium**	
		Udyam registration No	
		Women /SC/ST / Others	
10.	Name of the contact person		
11.	Communication e-Mail ID		
	Mobile No / Phone no		

THAMBIDURAI Digitally signed by THAMBIDURAI Date: 2026.01.08 08:38:03 +05'30'

Manufacturer Signature and seal

BHARAT HEAVY ELECTRICALS LIMITED
TIRUCHIRAPPALLI-620 014.

GENERAL CONDITIONS OF ENQUIRY FOR SUPPLY OF CS & AS FORMED FITTINGS AS PER BHEL DRAWINGS, TDC 423 REV 10 AND SPECIFICATION

Note: ***This Annexure has to be mandatorily filled & signed by the manufacturer (or) mill and submitted along with Technical Bid.***
Any deviation to the below mentioned terms shall be stated specifically in the comments column for each term and also in case of acceptance to our terms, it will be construed that the whole term is understood and agreed in totality without any deviation (if otherwise mentioned).

Ref/Enquiry No. 1402600001

Sl No	BHEL Requirements
01	**Pre-Qualification Criteria:** 1.1 **Technical** - 1.1 Suppliers shall meet the Pre - Qualification Requirements enclosed herewith. Pls submit all the required documents in line with the respective PQR. If incorrect or part of the required documents are provided, then in that case will not be able to evaluate and qualify the offer. Hence Pls submit documents as mentioned in Pre-qualifying requirements. **1.2 Financial (As per PQR)** **1.3 Integrity Pact** 1.4 Bidder must not be admitted under Corporate Insolvency Resolution Process or Liquidation as on date, by NCLT or any adjudicating authority/authorities, and shall submit undertaking (Annexure-4) to this effect. **1.5 Customer Approval (Not required)** **Explanatory Notes for the PQR:** **i.** 'Supplied' in P**QR – 1.1** Bidder shall submit the relevant documents against the above PQRs inclusive of Purchase order (wherein PO no., date, etc. is legible) along with proof of supply (i.e. - Completion Certificate/ Copy of Invoices / LR Copies/ Store Receipt Vouchers/ Payment Advice etc.) in the respective attachments in their offer in support of PQR. The "Contract" referred in Technical PQR may be Rate Contract/ Framework Agreement/ Purchase Order/ Work Order. **ii.** Bidder to submit Audited Balance Sheet and Profit and Loss Account for the respective years as indicated against Financial Turnover P**QR – 1.2** above along with all annexures. **iii.** In case of audited Financial Statements have not been submitted for all the three years as indicated against Financial Turnover PQR above, then the applicable audited statements submitted by the bidders against the requisite three years, will be averaged for three years i.e. total divided by three. **iv.** If Financial Statements are not required to be audited statutorily, then instead of audited Financial Statements, Financial Statements are required to be certified by Chartered Accountant. **v.** Credentials furnished by the bidder against "PRE-QUALIFYING CRITERIA" shall be verified from the issuing authority for its authenticity. In case, any credential (s) is/are found to be spurious, offer of the bidder is liable to be rejected. BHEL reserves the right to initiate any further action as per extant guidelines for Suspension of Business Dealings as applicable in BHEL. **vi.** Price Bids of only those bidders shall be opened who stand qualified after compliance of **QR – 1.1 to 1.5.**
02	**2.0 Scope of Supply:** **Supply of CS & AS Formed Fittings shall be as per BHEL Drawings, TDC 423 Rev 10, ANSI Standard, Approved SQP and specification** to BHEL, Trichy on F.O.R. Destination Basis. Unloading of materials at Destination shall be in BHEL's scope.
	2.1 Tender evaluation:
	2.1.1 Tender shall be evaluated on Item Wise Evaluation
03	**PRICE BASIS:**

	Submit your FIRM competitive offer rate per Nos. (basic price & freight) with best possible delivery on FOR BHEL-Trichy basis ONLY. The quoted prices shall be inclusive of all charges (like testing charges, Freight, etc.).
04	**TAXES & DUTIES:** **4.1** The Supplier/Vendor shall pay all (save the specific exclusions as enumerated in this clause) taxes, fees, license, charges, deposits, duties, tools, royalty, commissions, other charges, etc. which may be levied on the input goods & services consumed and output goods & services delivered in course of his operations in executing the contract. In case BHEL is forced to pay any of such taxes/duties, BHEL shall have the right to recover the same from his bills or otherwise as deemed fit along with the applicable overheads @5% and interest on the total value (i.e. amount paid by BHEL + overhead). However, provisions regarding **GST** on output supply (goods/service) and TDS/TCS as per Income Tax Act shall be as per following clauses. **4.2 GST (Goods and Services Tax)** **4.2.1** GST as applicable on output supply (goods/services) are excluded from Supplier/Vendor's scope; therefore, contractor's price/rates shall be **exclusive** of GST. Reimbursement of GST is subject to compliance of following terms and conditions. BHEL shall have the right to deny payment of GST and to recover any loss to BHEL on account of tax, interest, penalty etc. for non-compliance of any of the following condition. **4.2.2** The admissibility of GST, taxes and duties referred in this chapter or elsewhere in the contract shall be limited to direct transactions between BHEL & its Supplier/Vendor. BHEL shall not consider GST on any transaction other than the direct transaction between BHEL & its Supplier/Vendor. **4.2.3** Supplier/Vendor shall obtain prior written consent of BHEL before billing the amount towards such taxes. Where the GST laws permit more than one option or methodology for discharging the liability of tax/levy/duty, BHEL shall have the right to adopt the appropriate one considering the amount of tax liability on BHEL/Client as well as procedural simplicity with regard to assessment of the liability. The option chosen by BHEL shall be binding on the Contractor for discharging the obligation of BHEL in respect of the tax liability to the Supplier/Vendor. **4.2.4** Supplier/Vendor has to submit GST registration certificate of the concerned state. Supplier/Vendor also needs to ensure that the submitted GST registration certificate should be in active status during the entire contract period. **4.2.5** Supplier/Vendor has to issue Invoice/Debit Note/Credit Note indicating HSN/SAC code, Description, Value, Rate, applicable tax and other particulars in compliance with the provisions of relevant GST Act and Rules made thereunder. **4.2.6** Supplier/Vendor has to submit GST compliant invoice within the due date of invoice as per GST Law. In case of delay, BHEL reserves the right of denial of GST payment if there occurs any hardship to BHEL in claiming the input thereof. In case of goods, Supplier/Vendor has to provide scan copy of invoice & GR/LR/RR to BHEL before movement of goods starts to enable BHEL to meet its GST related compliances. Special care should be taken in case of month end transactions. **4.2.7** Supplier/Vendor has to ensure that invoice in respect of such services which have been provided/completed on or before end of the month should not bear the date later than last working day of the month in which services are performed. **4.2.8** Subject to other provisions of the contract, GST amount claimed in the invoice shall be released on fulfilment of all the following conditions by the Supplier/Vendor: - a) Supply of goods and/or services have been received by BHEL. b) Original Tax Invoice has been submitted to BHEL. c) Supplier/Vendor has submitted all the documents required for processing of bill as per contract/ purchase order/ work order. d) In cases where e-invoicing provision is applicable, Supplier/Vendor is required to submit invoice in compliance with e-invoicing provisions of GST Act and Rules made thereunder. e) Supplier/Vendor has filed all the relevant GST return (e.g. GSTR-1, GSTR-3B, etc.) pertaining to the invoice submitted and submit the proof of such return along with immediate subsequent invoice. In case of final invoice/ bill, contractor has to submit proof of such return within fifteen days from the due date of relevant return. f) Respective invoice has appeared in BHEL's GSTR - 2A for the month corresponding to the month of invoice and in GSTR-2B of the month in which such invoices has been reported by the contractor along with status of ITC availability as "YES" in GSTR-2B. Alternatively, BG of appropriate value may be furnished which shall be valid at least one month beyond the due date of confirmation of relevant payment of GST on GSTN portal or sufficient security is available to adjust the financial impact in case of any default by the Supplier/Vendor.

g) Supplier/Vendor has to submit an undertaking confirming the payment of all due GST in respect of invoices pertaining to BHEL.

4.2.9 Any financial loss arises to BHEL on account of failure or delay in submission of any document as per contract/purchase order/work order at the time of submission of Tax invoice to BHEL, shall be deducted from Supplier/Vendor's bill or otherwise as deemed fit.

4.2.10 TDS as applicable under GST law shall be deducted from Supplier/Vendor's bill.

4.2.11 Supplier/Vendor shall comply with the provisions of e-way bill wherever applicable. Further wherever provisions of GST Act permits, all the e-way bills, road permits etc. required for transportation of goods needs to be arranged by the contractor.

4.2.12 Supplier/Vendor shall be solely responsible for discharging his GST liability according to the provisions of GST Law and BHEL will not entertain any claim of GST/interest/penalty or any other liability on account of failure of Supplier/Vendor in complying the provisions of GST Law or discharging the GST liability in a manner laid down thereunder.

4.2.13 In case declaration of any invoice is delayed by the vendor in his GST return or any invoice is subsequently amended/altered/deleted on GSTN portal which results in any adverse financial implication on BHEL, the financial impact thereof including interest/penalty shall be recovered from the Supplier/Vendor's due payment.

4.2.14 Any denial of input credit to BHEL or arising of any tax liability on BHEL due to non-compliance of GST Law by the Supplier/Vendor in any manner, will be recovered along with liability on account of interest and penalty (if any) from the payments due to the Supplier/Vendor.

4.2.15 In the event of any ambiguity in GST law with respect to availability of input credit of GST charged on the invoice raised by the contractor or with respect to any other matter having impact on BHEL, BHEL's decision shall be final and binding on the Supplier/Vendor.

4.2.16 Variation in Taxes & Duties:

Any upward variation in GST shall be considered for reimbursement provided supply of goods and services are made within schedule date stipulated in the contract or approved extended schedule for the reason solely attributable to BHEL. However downward variation shall be subject to adjustment as per actual GST applicability.

In case the Government imposes any new levy/tax on the output service/goods after price bid opening, the same shall be reimbursed by BHEL at actual. The reimbursement under this clause is restricted to the direct transaction between BHEL and its Supplier/Vendor only and within the contractual delivery period only.

In case any new tax/levy/duty etc. becomes applicable after the date of Bidder's offer but before opening of the price Bid, the Bidder/ Supplier/Vendor must convey its impact on his price duly substantiated by documentary evidence in support of the same before opening of price bid. Claim for any such impact after opening the price bid will not be considered by BHEL for reimbursement of tax or reassessment of offer.

4.3 Income Tax:

TDS/TCS as applicable under Income Tax Act, 1961 or rules made thereunder shall be deducted/collected from Supplier/Vendor's bill.

4.4 Supplier HSN Code & Applicable GST % (To be filled by Supplier**)** _____

05 **MATERIAL DISPATCH CLEARANCE CERTIFICATE (MDCC): Not Applicable**

MDCC shall be issued by BHEL. No material shall be dispatched by supplier unless and until Material Dispatch Clearance Certificate (MDCC) issued by BHEL Site. In case any material is dispatched without MDCC and any loss is incurred by Supplier/Vendor for any reason whatsoever, BHEL shall not be responsible in any manner to compensate the supplier in this regard.

06 **INSPECTION / INSPECTION & TESTING AT SUPPLIERS WORKS:**

Nominated Inspection Agency: On behalf of the Buyer organization, any one of the following Inspection Agency would be conducting inspection of stores before acceptance:

•Pre-dispatch Inspection at Seller Premises (applicable only if pre-dispatch inspection clause has been selected in ATC): **By BHEL/TPI/CBB-IBR Authorized Inspection Agency at Supplier works.**

•Post Receipt Inspection at consignee site before acceptance of stores: **By BHEL QC at BHEL Trichy.**

BHEL reserves the right to inspect the material during manufacturing and also to get tested the material under dispatch from third party. The test results of third party test shall be final and binding on the Supplier/Vendor.

	BHEL will reserve the right to inspect/test the material during/after manufacturing at suppliers' works, and/or at BHEL Site. In case of rejection at any stage, Supplier/Vendor shall be liable to replace the materials at his own cost.
07	**DELIVERY:** The offer shall clearly indicate delivery period in **fixed number of weeks/Months** from the date of Purchase Order. **Our required delivery schedule is 120 days from PO. Supplier shall take a note of the same and specifically confirm the delivery schedule.** Notwithstanding anything to the contrary, including, but not limited to, provisions relating to extension of time and compensation/or delay, time shall be the essence of the Contract. **NOTE:** **a)** If the delivery of supply as detailed above gets delayed beyond the delivery period, the Supplier/Vendor shall request for a delivery extension and BHEL at its discretion may extend the Contract. However, if any 'Delivery extension' is granted to the Supplier/Vendor for completion of supply, due to backlog attributable to the Supplier/Vendor, then it shall be without prejudice to the rights of BHEL to impose LD for the delays attributable to the Supplier/Vendor.
08	**TRANSIT INSURANCE:** Transit Insurance of material is in **Supplier** Scope. **Supplier** shall insure the material at their cost for transportation.
09	**PAYMENT TERMS:** **a)** 100% direct EFT payment 90 days from the date of material acceptance at BHEL/stores subject to submission of billing documents as mentioned in sl. no.10 below. **b)** **MSME Suppliers** may opt for the below payment terms. 1. **Micro & Small enterprises** - Within 45 days from the date of Vehicle Entry/Gate Entry at BHEL/stores subject to submission of billing documents as mentioned in sl. no. 10 below. 2. **Medium enterprises** - Within 60 days from the date of material acceptance at BHEL/stores subject to submission of billing documents as mentioned in sl. no. 10 below. However, GST amount shall be reimbursed in line with compliance to Cl. No. 4 (Taxes & Duties) above. **b) NO INTEREST PAYABLE TO CONTRACTOR** No interest shall be payable on the security deposit or any other money due to the Supplier.
10	**DOCUMENTS REQUIRED FOR BILL PROCESSING:** The following documents are required to be sent with Material Dispatch/Billing Documents: • Original Tax Invoice (As per Cl. No. 4 above). • Copy of LR • Warranty Certificate • Duplicate for Transporter • Original Consignee copy of LR • E Way bill • MTC/ TPI documents

11	**BANK DETAILS FOR EMD & PERFORMANCE SECURITY SUBMISSION: Not Applicable**
	For Electronic Fund Transfer the details are as below: a) Name of the Beneficiary: Bharat Heavy Electricals Limited b) Bank Particulars (Details of Respectively executing region): Name of the Company - BHARAT HEAVY ELECTRICALS LTD. Address of the company - …… Name of the bank - Bank branch - …… BRANCH City Branch code - Account Number – …… Account type - …… IFSC code - …… MICR code – ……..
12	**EARNEST MONEY DEPOSIT**: Applicable / **Not Applicable.** **12.1** Every tender must be accompanied by the prescribed amount of Earnest Money Deposit (EMD) in the manner described herein. i EMD shall be furnished before tender opening / along with the offer in full as per the amount indicated in the NIT. ii The EMD up to an amount of Rs. …… is to be paid only in the following forms: a) Electronic Fund Transfer credited in BHEL account (before tender opening). b) Banker's cheque/ Pay order/ Demand draft, in favour of 'Bharat Heavy Electricals Limited' and payable at Regional HQ issuing the tender (along with offer). c) Fixed Deposit Receipt (FDR) issued by Scheduled Banks/ Public Financial Institutions as defined in the Companies Act (FDR should be in the name of the Contractor, a/c BHEL marking lien in favour of BHEL) (along with offer). The Fixed Deposit in such cases shall be valid for a period of 45 (forty-five) days beyond the final bid validity period. d) Bank Guarantee from any of the Scheduled Banks. In such cases shall be valid for a period of 45 (forty-five) days beyond the final bid validity period. e) **Insurance Surety Bonds.** In case the EMD is more than Rs. Two lakh and in case of foreign bidders, it may be in the form of a bank guarantee (in equivalent Foreign Exchange amount, in case of foreign bidders) issued/ confirmed from any of the scheduled commercial bank in India in the prescribed format. The EMD shall remain valid for a period of 45 (forty-five) days beyond the final bid validity period. iii No other form of EMD remittance shall be acceptable to BHEL. **12.2** EMD by the Bidder will be forfeited as per NIT conditions, if: i. The bidder withdraws or amends its/his tender or impairs or derogates from the tender in any respect within the period of validity of the tender or if the successful bidder fails to furnish the required performance security within the specified period mentioned in the Tender. ii. EMD by the Bidder shall be withheld in case any action on the tenderer is envisaged under the provisions of extant "Guidelines on Suspension of business dealings with suppliers/ contractors" and shall be forfeited in case of suspension **12.3** Subject to Clause 12.2 above, EMD of the unsuccessful bidders shall be returned at the earliest after expiry of the final bid validity period and latest by the 30th day after the award of the contract. However, in case of two packet or two stage bidding, EMD of unsuccessful bidders during first stage i.e., technical evaluation etc. shall be returned within 30 days of declaration of result of first stage i.e. technical evaluation etc. **12.4** EMD of successful Bidder shall be refunded on conclusion of the order/ receipt of a performance security as mentioned in NIT. **12.5 EMD shall not carry any interest.** MSE / KVIC / ACASH / WDO / Colr Board / TRIFED / Kendriya Bhandar / Turnover above 500 Cr / BIS License holders / Central PSU / State PSU / Startups as recognized by Department for Promotion of Industry and Internal Trade (DPIIT) shall be exempted from payment of EMD.
13	**PERFORMANCE SECURITY:** Applicable / **Not Applicable** **13.1** Successful bidder awarded the contract should deposit ___ % of the contract value as performance security towards fulfilment of all contractual obligations, including warranty obligations. **13.2** Performance Security is to be furnished within 14 days after issuance of Contract/PO and should remain valid for a period of 60 (sixty) days beyond the date of completion of all contractual obligations of the Supplier/Vendor, including warranty obligations.

13.3 Modes of deposit:

a) Performance security may be furnished in the following forms:

i. Local cheques of Scheduled Banks (subject to realization)/ Pay Order/Demand Draft/ Electronic Fund Transfer in favour of 'Bharat Heavy Electricals Limited' and payable at Regional HQ
ii. Bank Guarantee from Scheduled Banks / Public Financial Institutions as defined in the Companies Act. The Bank Guarantee should be in the prescribed format of BHEL.
iii. Fixed Deposit Receipt (FDR) issued by Scheduled Banks / Public Financial Institutions as defined in the Companies Act (FDR should be in the name of the Contractor, a/c BHEL).
iv. Securities available from Indian Post offices such as National Savings Certificates, Kisan Vikas Patras etc. (held in the name of Contractor furnishing the security and duly endorsed/ hypothecated/ pledged, as applicable, in favour of BHEL).
v. Insurance Surety Bond.

Note: BHEL will not be liable or responsible in any manner for the collection of interest or renewal of the documents or in any other matter connected therewith.

b) In case of GTE tenders, the performance security should be in the same currency as the contract and must conform to Uniform Rules for Demand Guarantees (URDG 758) - an international convention regulating international securities.

13.4 The performance security will be forfeited and credited to BHEL's account in the event of a breach of contract by the Supplier/Vendor as provided herein or elsewhere in the Contract/PO.

13.5 Performance Security shall be refunded to the Supplier/Vendor without interest, after the Supplier/Vendor duly performs and completes the contract in all respects but not later than 60(sixty) days of completion of all such obligations including the warranty under the contract.

13.6 The Performance Security shall not carry any interest.

13.7 There is no exemption of Performance security deposit submission for MSE Vendors.

14 BREACH OF CONTRACT, REMEDIES AND TERMINATION:

14.1 The following shall amount to breach of contract:

I. Non-supply of material/ non-completion of work by the Supplier/Vendor within scheduled delivery/ completion period as per contract or as extended from time to time.
II. The Supplier/Vendor fails to perform as per the activity schedule and there are sufficient reasons even before expiry of the delivery/ completion period to justify that supplies shall be inordinately delayed beyond contractual delivery/ completion period
III. The Supplier/Vendor delivers equipment/ material not of the contracted quality.
IV. The Supplier/Vendor fails to replace the defective equipment/ material/ component as per guarantee clause.
V. Withdrawal from or abandonment of the work by the Supplier/Vendor before completion as per contract.
VI. Assignment, transfer, subletting of Contract by the Supplier/Vendor without BHEL's written permission resulting in termination of Contract or part thereof by BHEL.
VII. Non-compliance to any contractual condition or any other default attributable to Supplier/Vendor.
VIII. Any other reason(s) attributable to Vendor towards failure of performance of contract. In case of breach of contract, BHEL shall have the right to terminate the Purchase Order/ Contract either in whole or in part thereof without any compensation to the Supplier/Vendor.
IX. Any of the declarations furnished by the contractor at the time of bidding and/ or entering into the contract for supply are found untruthful and such declarations were of a nature that could have resulted in non-award of contract to the contractor or could expose BHEL and/ or Owner to adverse consequences, financial or otherwise.
X. Supplier/Vendor is convicted of any offence involving corrupt business practices, antinational activities or any such offence that compromises the business ethics of BHEL, in violation of the Integrity Pact entered into with BHEL has the potential to harm the overall business of BHEL/ Owner.

Note- Once BHEL considers that a breach of contract has occurred on the part of Supplier/Vendor, BHEL shall notify the Supplier/Vendor by way of notice in this regard. Contractor shall be given an opportunity to rectify the reasons causing the breach of contract within a period of 14 days.
In case the contractor fails to remedy the breach, as mentioned in the notice, to the satisfaction of BHEL, BHEL shall have the right to take recourse to any of the remedial actions available to it under the relevant provisions of contract.

14.2 Remedies in case of Breach of Contract.

i. Wherein the period as stipulated in the notice issued under clause 14.1 has expired and Supplier/Vendor has failed to remedy the breach, BHEL will have the right to terminate the contract on the ground of "Breach of Contract" without any further notice to contractor.
ii. Upon termination of contract, BHEL shall be entitled to recover an amount equivalent to 10% of the Contract Value for the damages on account of breach of contract committed by the Supplier/Vendor. This amount shall be recovered by way of encashing the security instruments like performance bank guarantee etc available with BHEL against the said contract. In case the value of the security instruments available is less than 10% of the contract value, the balance amount shall be recovered from other financial remedies (i.e. available bills of the Supplier/Vendor, retention amount, from the money due to the Supplier/Vendor etc. with BHEL) or the other legal remedies shall be pursued.
iii. wherever the value of security instruments like performance bank guarantee available with BHEL against the said contract is 10% of the contract value or more, such security instruments to the extent of 10% contract value will be encashed. In case no security instruments are available or the value of the security instruments available is less than 10% of the contract value, the 10% of the contract value or the balance amount, as the case may be, will be recovered in all or any of the following manners:
iv. In case the amount recovered under sub clause (a) above is not sufficient to fulfil the amount recoverable then; a demand notice to deposit the balance amount within 30 days shall be issued to Supplier/Vendor.
v. If Supplier/Vendor fails to deposit the balance amount within the period as prescribed in demand notice, following action shall be taken for recovery of the balance amount:
   a) from dues available in the form of Bills payable to defaulted Supplier/Vendor against the same contract.
   b) If it is not possible to recover the dues available from the same contract or dues are insufficient to meet the recoverable amount, balance amount shall be recovered from any money(s) payable to Supplier/Vendor under any contract with other Units of BHEL including recovery from security deposits or any other deposit available in the form of security instruments of any kind against Security deposit or EMD.
vi. In-case recoveries are not possible with any of the above available options, Legal action shall be initiated for recovery against defaulted supplier/Vendor.
vii. It is an agreed term of contract that this amount shall be a genuine pre-estimate of damages that BHEL would incur in completion of balance contractual obligation of the contract through any other agency and BHEL will not be required to furnish any other evidence to the Supplier/Vendor for the purpose of estimation of damages.
viii. In addition to the above, imposition of liquidated damages, debarment, termination, de-scoping, short-closure, etc., shall be applied as per provisions of the contract.

Note:
1) The defaulting Supplier/Vendor shall not be eligible for participation in any of the future enquiries floated by BHEL to complete the balance work. The defaulting contractor shall mean and include:
(a) In case defaulted Supplier/Vendor is the Sole Proprietorship Firm, any Sole Proprietorship Firm owned by same Sole Proprietor.
(b) In case defaulted Supplier/Vendor is The Partnership Firm, any firm comprising of same partners/ some of the same partners; or sole proprietorship firm owned by any partner(s) as a sole proprietor.

LD against delay in executed supply in case of Termination of Contract:

LD against delay in executed supply shall be calculated in line with LD clause no. 18.0 below, for the delay attributable to Supplier/Vendor. For limiting the maximum value of LD, contract value shall be taken as Executed Value of supply till termination of contract.

Method for calculation of "LD against delay in executed supply in case of termination of contract" is given below.

i. Let the time period from scheduled date of start of supply till termination of contract excluding the period of Hold (if any) not attributable to contractor = T1

ii. **Let the value of executed supply till the time of termination of contract= X**

iii. Let the Total Executable Value of supply for which inputs/fronts were made available to Supplier/Vendor and were planned for execution till termination of contract = Y

iv. Delay in executed supply attributable to Supplier/Vendor i.e. T2=[1-(X/Y)] x T1

LD shall be calculated in line with LD clause (clause 18.0) of the Contract for the delay attributable to Supplier/Vendor taking "X" as Contract Value and "T2" as period of delay attributable to Supplier/Vendor.

15 BILL TO/ SHIP TO ADDRESS:

Bills to be mandatorily uploaded in SUVIDHA portal or BHEL' B2B portal for processing the payment

Login by clicking the following link of SUVIDHA portal- https://suvidha.bhel.in/suvidha/

Login by clicking the following link of B2B portal Portal URL- https://trichy.bhel.com/mm/

After uploading the invoice in Portal pls provide the below details for payment processing
In case of Digitally signed invoice – Class 3 digitally signed tax invoices should be valid and must provide the information via email after being uploaded to one of the above portals.

Ship to Address:
MGR/Stores In-charge,
Ward 21/BHEL Stores,
HPBP BHEL Trichy – 620014.
Ph-04312575237/5725

16 GUARANTEE/WARRANTY:

Supplier to accept guarantee/warrantee of "18 months from the date of dispatch or 12 months from the date of commissioning, whichever is earlier". Supplier shall replace defective material free of cost (inclusive of all Testing, Inspection, TPI, Service charges etc.) up to destination within two months from defect notification date.

17 MICRO AND SMALL ENTERPRISES (MSE):

Any Bidder falling under MSE category shall furnish the following details & submit documentary evidence/ Govt. Certificate etc. in support of the same along with their techno-commercial offer.

Type under MSE	UDYAM No	SC/ST Owned	Women Owned	Others (Excluding SC/ST/Women)
Micro				
Small				

Note: If the bidder does not furnish the above, offer shall be processed construing that the bidder is not falling under MSE category.

a) MSE suppliers can avail the intended benefits in respect of the procurements related to the Goods and Services only (Definition of Goods and Services as enumerated by Govt. of India vide Office Memorandum F. No. 21(8)/2011-MA dtd. 09/11/2016 office of AS & DC, MSME) only if they submit along with the offer, attested copies of either Udyam Registration. Date to be reckoned for determining the deemed validity will be the last date of Technical Bid submission. Non-submission of supporting document in NIC portal will lead to consideration of their bids at par with other bidders. No benefits shall be applicable for this enquiry if the above required documents are not uploaded at the time of bid submission. Documents submitted by the bidder shall be verified by BHEL for rendering the applicable benefits.

b) b) Material entry date (Gate Entry date) will be considered for payment due date calculation (when no objections are raised by BHEL). If such objection(s) is raised within 15 days of zero date /last closure of objection and payment due date will be accordingly revised considering date on which vendor has successfully replied against objection as zero date.

c) As per the public procurement policy notified by the central government, micro and small enterprises quoting within the price band of L1 +15% shall be allowed to supply a portion of the requirement up to 25% of the tender value subject to condition that such enterprises bring down their price to L1 price where L1 price is from other than a micro and small enterprise. If L1 offer is from a micro / small enterprise, this provision will not be applicable.

d) Since most of the items are non-divisible, 100% quantity shall be counter offered to MSE suppliers (If MSE Suppliers falls under L1+15% band).

18 LIQUIDATED DAMAGE:

Liquidated Damages, wherever referred under this Tender/Agreement, shall mean and refer to the damages, not in the nature of penalty, which the contractor agrees to pay in the event of delay in delivery of supplies, breach of contract etc. as the case may be.

Liquidated Damages leviable upon the Supplier/Vendor is a sum which is agreed by the parties as a reasonable and genuine pre-estimate of damages which will be suffered by BHEL on account of delay/breach on the part of the Supplier/Vendor.

If the Seller/Service Provider fails to deliver any or all of the Goods/Services within the original/re-fixed delivery period(s) specified in the contract/PO, the Buyer/BHEL will be entitled to deduct/recover the Liquidated Damages for the delay, unless covered under Force Majeure conditions aforesaid, **@ 0.5% of the contract value of delayed quantity per week or part of the week of delayed period as pre-estimated damages not exceeding 10% of the contract value** without any controversy/dispute of any sort whatsoever.

LD will be reckoned from the date of receipt of vehicle entry at BHEL Trichy/stores

19 INTEGRITY PACT (IP): Not Applicable

a) IP is a tool to ensure that activities and transactions between the Company and its Bidders/ Supplier/Vendor are handled in a fair, transparent and corruption free manner. Following Independent External Monitors (IEMs) on the present panel have been appointed by BHEL with the approval of CVC to oversee implementation of IP in BHEL.

Sl.No	IEM	Email
1	Dr. Sarat Kumar Acharya, Ex-CMD, NLC	iem1@bhel.in
2	Shri R. Mukundan, IRPS (Retd.)	iem2@bhel.in
3	Shri Madan Lal Meena, IAS (Retd.)	iem3@bhel.in

b) The IP as enclosed with the tender is to be submitted (duly signed by authorized signatory) along with techno-commercial bid (Part-I, in case of two/ three part bid). Only those bidders who have entered into such an IP with BHEL would be competent to participate in the bidding. In other words, entering into this Pact would be a preliminary qualification.

c) Please refer Section-8 of IP for Role and Responsibilities of IEMs. In case of any complaint arising out of the tendering process, the matter may be referred to any of the above IEM(s). All correspondence with the IEMs shall be done through email only.

Note:

No routine correspondence shall be addressed to the IEM (phone/ post/ email) regarding the clarifications, time extensions or any other administrative queries, etc. on the tender issued. All such clarification/ issues shall be addressed directly to the tender issuing (procurement) department's officials whose contact details are as per Clause no. 21 below.

20 PREFERENCE TO MAKE IN INDIA:

For this procurement, the local content to categorize a Supplier/Vendor as a Class I local supplier/ Class II local Supplier/Non-Local Supplier and purchase preferences to Class I local supplier, is as defined in Public Procurement (Preference to Make in India), Order 2017 dated 04.06.2020 issued by DPIIT. In case of subsequent orders issued by the nodal ministry, changing the definition of local content for the items of the NIC Bid, the same shall be applicable even if issued after issue of this NIC Bid, but before opening of Part-II bids against this NIC Bid.

20.1 Compliance to Restrictions under Rule 144 (xi) of GFR 2017:

I. Any bidder from a country which shares a land border with India will be eligible to bid in this tender only if the bidder is registered with the Competent Authority. The Competent Authority for the purpose of this Clause shall be the Registration Committee constituted by the Department for Promotion of Industry and Internal Trade (DPIIT).

II. "Bidder" (including the term 'tenderer', 'consultant' or 'service provider' in certain contexts) means any person or firm or company, including any member of a consortium or joint venture (that is an association of several persons, or firms or companies), every artificial juridical person not falling in any of the descriptions of bidders stated hereinbefore, including any agency branch or office controlled by such person, participating in a procurement process.

	III. "Bidder from a country which shares a land border with India" for the purpose of this Clause means: - a. An entity incorporated established or registered in such a country; or b. A subsidiary of an entity incorporated established or registered in such a country; or c. An entity substantially controlled through entities incorporated, established or registered in such a country; or d. An entity whose beneficial owner is situated in such a country; or e. An Indian (or other) agent of such an entity; or f. A natural person who is a citizen of such a country; or g. A consortium or joint venture where any member of the consortium or joint venture falls under any of the above. IV. The beneficial owner for the purpose of (III) above will be as under: 1. In case of a company or Limited Liability Partnership, the beneficial owner is the natural person(s), who, whether acting alone or together or through one or more juridical person, has a controlling ownership interest or who exercises control through other means. Explanation a. "Controlling ownership interest" means ownership of or entitlement to more than twenty-five per cent of shares or capital or profits of the company. b. "Control" shall include the right to appoint majority of the directors or to control the management or policy decisions including by virtue of their shareholding or management rights or shareholders agreements or voting agreements. 2. In case of a partnership firm, the beneficial owner is the natural person(s) who, whether acting alone or together, or through one or more juridical person, has ownership of entitlement to more than fifteen percent of capital or profits of the partnership. 3. In case of an unincorporated association or body of individuals, the beneficial owner is the natural person(s), who, whether acting alone or together, or through one or more juridical person has ownership of or entitlement to more than fifteen percent of the property or capital or profits of the such association or body of individuals. 4. Where no natural person is identified under (1) or (2) or (3) above, the beneficial owner is the relevant natural person who holds the position of senior managing official; 5. In case of a trust, the identification of beneficial owner(s) shall include identification of the author of the trust, the trustee, the beneficiaries with fifteen percent or more interest in the trust and any other natural person exercising ultimate effective control over the trust through a chain of control or ownership. (i) The bidder shall provide undertaking for their compliance to this Clause, in the format provided in Annexure-13. **(ii)** Registration of the bidder with Competent Authority should be valid at the time of submission of bids and at the time of acceptance of the bids.
21	**Settlement of Dispute:** If any dispute or difference of any kind whatsoever shall arise between BHEL and the Supplier/Vendor, arising out of the contract for the performance of the work whether during the progress of contract termination, abandonment or breach of the contract, it shall in the first place referred to Designated Engineer for amicable resolution by the parties. Designated Engineer (to be nominated by BHEL for settlement of disputes arising out of the contract) who within 60 days after being requested shall give written notice of his decision to the contractor. Save as hereinafter provided, such decision in respect of every matter so referred shall forthwith be given effect to by the Supplier/Vendor who shall proceed with the work with all due diligence, whether he or BHEL desires to resolve the dispute as hereinafter provided or not. If after the Designated Engineer has given written notice of this decision to the party and no intention to pursue the dispute has been communicated to him by the affected party within 30 days from the receipt of such notice, the said decision shall become final and binding on the parties. In the event the Supplier/Vendor being dissatisfied with any such decision or if amicable settlement cannot be reached then all such disputed issues shall be resolved through conciliation in terms of the BHEL Conciliation Scheme 2018 as per Clause 21.1 **21.1 Conciliation:**

Any dispute, difference or controversy of whatever nature howsoever arising under or out of or in relation to this Agreement (including its interpretation) between the Parties, and so notified in writing by either Party to the other Party (the "Dispute") shall, in the first instance, be attempted to be resolved amicably in accordance with the conciliation procedure as per BHEL Conciliation Scheme 2018. The proceedings of Conciliation shall broadly be governed by Part-III of the Arbitration and Conciliation Act 1996 or any statutory modification thereof and as provided in - "Procedure for conduct of conciliation proceedings" (as available in www.bhel.com)).

Note: Ministry of Finance has issued OM reference No. 1/2/24 dated 03.06.2024 regarding "Guidelines for Arbitration and Mediation in Contracts of Domestic Public Procurement. In the said OM it has been recommended that Government departments/ Entities/agencies are to encourage mediation under the Mediation Act. 2023. The said Act has not yet been notified by the Government. Therefore, the clause "Settlement of Disputes" shall be modified accordingly as and when the Mediation Act 2023 gets notified.

21.2 ARBITRATION:

21.2.1 Except as provided elsewhere in this Contract, in case Parties are unable to reach amicable settlement (whether by Conciliation to be conducted as provided in Clause 14.1 herein above or otherwise) in respect of any dispute or difference; arising out of the formation, breach, termination, validity or execution of the Contract; or, the respective rights and liabilities of the Parties; or, in relation to interpretation of any provision of the Contract; or. in any manner touching upon the Contract (hereinafter referred to as the 'Dispute'), then, either Party may, refer the disputes to **Madras High Court, Arbitration Centre (MHCAC)** and such dispute to be adjudicated by Sole Arbitrator appointed in accordance with the Rules of said Arbitral Institution.

21.2.2 A party willing to commence arbitration proceeding shall invoke Arbitration Clause by giving notice to the other party in terms of section 21 of the Arbitration & Conciliation Act, 1996 (hereinafter referred to as the 'Notice') before referring the matter to arbitral institution. The Notice shall be addressed to the Head of the Unit, BHEL, executing the Contract and shall contain the particulars of all claims to be referred to arbitration with sufficient detail and shall also indicate the monetary amount of such claim including interest, if any.

21.2.3 After expiry of 30 days from the date of receipt of aforesaid notice, the party invoking the Arbitration shall submit that dispute to the Arbitral Institution- **Madras High Court, Arbitration Centre (MHCAC)-** and that dispute shall be adjudicated in accordance with their respective Arbitration Rules. The matter shall be adjudicated by a Sole Arbitrator who shall necessarily be a Retd Judge having considerable experience in commercial matters to be appointed/nominated by the respective institution. The cost/expenses pertaining to the said Arbitration shall also be governed in accordance with the Rules of the respective Arbitral Institution. The decision of the party invoking the Arbitration for reference of dispute to **Madras High Court, Arbitration Centre (MHCAC)-** for adjudication of that dispute shall be final and binding on both the parties and shall not be subject to any change thereafter. The institution once selected at the time of invocation of dispute shall remain unchanged.

21.2.4 The fee and expenses shall be borne by the parties as per the Arbitral Institutional rules.

21.2.5 The Arbitration proceedings shall be in English language and the seat of Arbitration shall be **Trichy.**

21.2.6 Subject to the above, the provisions of Arbitration & Conciliation Act 1996 and any amendment thereof shall be applicable. All matters relating to this Contract and arising out of invocation of Arbitration clause are subject to the exclusive jurisdiction of the Court(s) situated at **Trichy.**

21.2.7 Notwithstanding any reference to the Designated Engineer or Conciliation or Arbitration herein, a. the parties shall continue to perform their respective obligations under the Contract unless they otherwise agree. Settlement of Dispute clause cannot be invoked by the Contractor, if the Contract has been mutually closed or 'No Demand Certificate' has been furnished by the Contractor or any Settlement Agreement has been signed between the Employer and the Contractor.

21.2.8 It is agreed that Mechanism of resolution of disputes through arbitration shall be available only in the cases where the value of the dispute is less than Rs. 10 Crores.

21.2.9 In case the disputed amount Claim, Counter claim including interest is Rs. 10 crores and above, the parties shall be within their rights to take recourse to remedies other than Arbitration, as may be available to them under the applicable laws after prior intimation to the other party. Subject to the aforesaid

conditions, provisions of the Arbitration and Conciliation Act, 1996 and any statutory modifications or re-enactment thereof as amended from time to time, shall apply to the arbitration proceedings under this clause.

21.2.10 In case, multiple arbitrations are invoked (whether sub-judice or arbitral award passed) by any party to under this contract, then the cumulative value of claims (including interest claimed or awarded) in all such arbitrations shall be taken in account while arriving at the total claim in dispute for the subject contract for the purpose of clause 14.2.9. Disputes having cumulative value of less than 10 crores shall be resolved through arbitration and any additional dispute shall be adjudicated by the court of competent jurisdiction.

21.3 In case of Contract with Public Sector Enterprise (PSE) or a Government Department, the following shall be applicable:

In the event of any dispute or difference relating to the interpretation and application of the provisions of commercial contract(s) between Central Public Sector Enterprises (CPSEs)/ Port Trusts inter se and also between CPSEs and Government Departments/Organizations (excluding disputes concerning Railways, Income Tax, Customs & Excise Departments), such dispute or difference shall be taken up by either party for resolution through AMRCD (Administrative Mechanism for Resolution

22 JURISDICTION

Subject to clause 21 of this contract, the Civil Court having original Civil Jurisdiction at Tiruchirappalli, Tamilnadu shall alone have exclusive jurisdiction in regard to all matters in respect of the Contract.

GOVERNING LAWS
The contract shall be governed by the Law for the time being in force in the Republic of India.

23 FORCE MAJEURE

23.1 "Force Majeure" shall mean circumstance which is:
a) beyond control of either of the parties to contract,
b) either of the parties could not reasonably have provided against the event before entering into the contract,
c) having arisen, either of the parties could not reasonably have avoided or overcome, and
d) not substantially attributable to either of the parties and Prevents the performance of the contract, such circumstances include but shall not be limited to:

i. War, hostilities, invasion, act of foreign enemies.
ii. Rebellion, terrorism, revolution, insurrection, military or usurped power, or civil war.
iii. Riot, commotion or disorder by persons other than the contractor's personnel and other employees of the contractor and sub-contractors.
iv. Strike or lockout not solely involving the contractor's personnel and other employees of the contractor and sub-contractors.
v. Encountering munitions of war, explosive materials, ionizing radiation or contamination by radio-activity, except as may be attributable to the contractor's use of such munitions, explosives, radiation or radio- activity.
vi. Natural catastrophes such as earthquake, tsunami, volcanic activity, hurricane or typhoon, flood, fire, cyclones etc.
vii. Epidemic, pandemic etc.

23.2 The following events are explicitly excluded from Force Majeure and are solely the responsibilities of the non-performing party: a) any strike, work-to-rule action, go-slow or similar labour difficulty (b) late delivery of equipment or material (unless caused by Force Majeure event) and (c) economic hardship.

23.3 If either party is prevented, hindered or delayed from or in performing any of its obligations under the Contract by an event of Force Majeure, then it shall notify the other in writing of the occurrence of such event and the circumstances thereof within 15 (fifteen) days after the occurrence of such event.

23.4 The party who has given such notice shall be excused from the performance or punctual performance of its obligations under the Contract for so long as the relevant event of Force Majeure continues and to the extent that such party's performance is prevented, hindered or delayed. The Time for Completion shall be extended by a period of time equal to period of delay caused due to such Force Majeure event.

23.5 Delay or non-performance by either party hereto caused by the occurrence of any event of Force Majeure shall not

i) Constitute a default or breach of the Contract.

ii) Give rise to any claim for damages or additional cost expense occasioned thereby, if and to the extent that such delay or non-performance is caused by the occurrence of an event of Force Majeure.

23.6 BHEL at its discretion may consider short closure of contract after 1 year of imposition of Force Majeure in line with extant guidelines. In any case, Supplier/Vendor cannot consider deemed short-closure after 1 year of imposition of Force Majeure.

24 **Non-Disclosure Agreement:**

The bidders shall enter into the Non-disclosure agreement separately. (Annexure 7 attached).

25 **Cartel Formation**

The Bidder declares that they will not enter into any illegal or undisclosed agreement or understanding, whether formal or informal with other Bidder(s). This applies in particular to prices, specifications, certifications, subsidiary contracts, submission or non-submission of bids or any other actions to restrict competitiveness or to introduce cartelization in the bidding process. In case, the Bidder is found having indulged in above activities, suitable action shall be taken by BHEL as per extant policies/ guidelines.

26 **Fraud Prevention Policy**

Bidder along with its associate /collaborators /sub-contractors /sub-vendors / consultants / service providers shall strictly adhere to BHEL Fraud Prevention Policy displayed on BHEL website http://www.bhel.com and shall immediately bring to the notice of BHEL Management about any fraud or suspected fraud as soon as it comes to their notice.

27 **Suspension of Business Dealings with Suppliers / Contractors:**

The offers of the bidders who are under suspension as also the offers of the bidders, who engage the services of the banned firms / principal / agents, shall be rejected. The list of banned firms is available on BHEL website www.bhel.com.

If any bidder / supplier / contractor during pre-tendering / tendering / post tendering / award /execution / post-execution stage indulges in any act, including but not limited to, mal-practices, cheating, bribery, fraud or and other misconduct or formation of cartel so as to influence the bidding process or influence the price or tampers the tendering process or acts or omits in any manner which tantamount to an offence punishable under any provision of the Indian Penal Code, 1860(Bhartiya Nyaya Samhita 2023) or any other law in force in India, or does anything which is actionable under the Guidelines for Suspension of Business dealings, action may be taken against such bidder / supplier / contractor as per extant guidelines of the company available on www.bhel.com and / or under applicable legal provisions. Guidelines for suspension of business dealings is available in the webpage:
http://www.bhel.com/vender_registration/vender.php.

28 Bid should be free from correction, overwriting, using corrective fluid, etc. Any interlineation, cutting, erasure or overwriting shall be valid only if they are attested under full signature(s) of person(s) signing the bid else bid shall be liable for rejection. In the event of any Technical or Commercial queries, the same may please be addressed to the following BHEL concerned before Part I opening-

Name	M Thambidurai	S Dhanabal
Dept	Sr Engineer/MM/Raw materials	Sr. Manager MM/RM/Purchase
Address	Bldg No:24, BHEL Trichy	Bldg No:24, BHEL Trichy
Phone	0431 -2577492	0431 -2575730/ 9942705050
E-Mail	thambi@bhel.in	dhanabals@bhel.in

29 **Order of Precedence:**

In the event of any ambiguity or conflict between the Tender Documents, the order of precedence shall be in the order below:

a. Amendments/Clarifications/Corrigenda/Errata etc. issued in respect of the tender documents by BHEL.
b. Buyer Added Bid Specific ATC
c. General Bid Technical Conditions of Contract (TCC)
d. BHEL PO

30	**Note:** 1. In the event of our customer order covering this tender being cancelled /placed on hold /otherwise modified, BHEL would be constrained to accordingly cancel / hold / modify the tender at any stage of execution. 2. BHEL may negotiate the L1 rate, if not meeting our budget / estimated cost. BHEL may re-float the tender opened, if L1 price is not acceptable to BHEL even after negotiation. Any deviation from the conditions specified in TECHNO-COMMERCIAL TERMS AND CONDITIONS - Annexure-A, will lead to rejection of offer. 3. Any change in applicable rates of Tax or any other statutory levies (Direct / Indirect) or any new introduction of any levy by means of statute and its corresponding liability for the deliveries beyond the agreed delivery date for reasons not attributable to BHEL will be to vendors account. BHEL will not reimburse the same and any subsequent claim in this respect will be summarily rejected. 4. BHEL reserves its right to reject an offer due to unsatisfactory past performance by the respective Vendor in the execution of any contract to any BHEL project / Unit. 5. The offers of the bidders who are under suspension and also the offers of the bidders, who engage the services of the banned firms /principal/agents, shall be rejected. The list of banned firms is available on BHEL web site www.bhel.com. 6. Recovery / deduction as applicable as per Direct and Indirect taxes as notified by Govt. Of India from time to time will be made and information/certificate for such deduction/recoveries shall be provided by BHEL to the vendor.
31	**Enclosure:** Annexure-1: Check List. Annexure-2: Offer forwarding letter / tender submission letter Annexure-3: No Deviation Certificate Annexure-4: Declaration regarding Insolvency/ Liquidation/ Bankruptcy Proceedings Annexure-5: Declaration by Authorized Signatory Annexure-6: Declaration by Authorized Signatory regarding Authenticity of submitted Documents Annexure-7: Non-Disclosure Certificate ~~Annexure-8: Integrity Pact~~ ~~Annexure-9: Declaration confirming knowledge about Site Conditions~~ Annexure-10: Declaration reg. Related Firms & their areas of Activities Annexure-11: Declaration for relation in BHEL Annexure- 12: Declaration reg. minimum local content in line with revised public procurement Annexure- 13: Declaration regarding compliance to Restrictions under Rule 144 (xi) of GFR 2017 Annexure-14: Bank Account Details for E-Payment Annexure-15: Power of Attorney for submission of tender. ~~Annexure-16: Proforma of Bank Guarantee for Earnest Money.~~ ~~Annexure-17: Proforma of Bank Guarantee for Performance Security.~~ ~~Annexure-18: List of Consortium Bank.~~ Annexure 19: Declaration regarding conflict of interest

THAMBI DURAI

Digitally signed by THAMBIDURAI
Date: 2026.01.08 08:38:41 +05'30'

Manufacturer Signature and seal

Enquiry No: 1402600001 dt.08.01.2026

ANNEXURE- 1

CHECK LIST

NOTE: - Suppliers are required to fill in the following details in their Letter head and no column should be left blank

A	**Name and Address of the Supplier**	
B	**GSTN No. of the Supplier (Place of Execution of Contract / Purchase Order)**	
C	**Details of Contact person for this Tender**	Name: Mr./ Ms. Designation: Telephone No: Mobile No: Email ID:
D	**EMD DETAILS**	Not Applicable

E	**DESCRIPTION**	**APPLICABILITY (BY BHEL)**	**ENCLOSED (BY BIDDER)**
i.	Whether Pre - Qualification Criteria is understood and provided proper supporting documents.	Applicable/ ~~Not Applicable~~	YES / NO
ii.	Whether all pages of the Tender documents including annexures, appendices etc. are read and understood	Applicable/ ~~Not Applicable~~	YES / NO
iii.	Audited Balance Sheet and profit & Loss Account for the last FY	Applicable/ ~~Not Applicable~~	YES / NO
iv.	Copy of PAN Card & GST registration	Applicable/ ~~Not Applicable~~	YES / NO
v.	Submission of MSE certificate as specified in Tender	Applicable/ ~~Not Applicable~~	YES / NO
vi.	Offer forwarding letter / tender submission letter as per Annexure 2	Applicable/ ~~Not Applicable~~	YES / NO
vii.	Submission of Certificate of No Deviation as per Annexure 3	Applicable/ ~~Not Applicable~~	YES / NO
viii.	Declaration regarding Insolvency/ Liquidation/ Bankruptcy Proceedings as per Annexure 4	Applicable/ ~~Not Applicable~~	YES / NO
ix.	Declaration by Authorized Signatory as per Annexure 5	Applicable/ ~~Not Applicable~~	YES / NO

x.	Declaration by Authorized Signatory regarding Authenticity of submitted Documents Annexure 6	Applicable/ ~~Not Applicable~~	YES / NO
xi.	Submission of Non-Disclosure Certificate as per Annexure 7	Applicable/ ~~Not Applicable~~	YES / NO
xii.	Submission of Integrity Pact as specified in Tender as per Annexure 8	Not Applicable	-
xiii.	Declaration confirming knowledge about Site Conditions as per Annexure 9	Not Applicable	-
xiv.	Declaration reg. Related Firms & their areas of Activities as per Annexure 10	Applicable/ ~~Not Applicable~~	YES / NO
xv.	Declaration for relation in BHEL as per Annexure 11	Applicable/ ~~Not Applicable~~	YES / NO
xvi.	Declaration reg. minimum local content in line with revised public procurement as per Annexure 12	Applicable/ ~~Not Applicable~~	YES / NO
xvii.	Declaration regarding compliance to Restrictions under Rule 144 (xi) of GFR 2017 as per Annexure 13	Applicable/ ~~Not Applicable~~	YES / NO
xviii.	Bank Account Details for E-Payment as per Annexure 14	Applicable/ ~~Not Applicable~~	YES / NO
xix.	Power of Attorney for submission of tender as per Annexure 15	Applicable/ ~~Not Applicable~~	YES / NO
xx.	Proforma of Bank Guarantee for Earnest Money as per Annexure 16	Not Applicable	-
xxi.	Proforma of Bank Guarantee for Performance Security. Annexure-17:	Not Applicable	-
xxii.	List of Consortium Bank. Annexure-18	Not Applicable	-
xxiii.	Declaration regarding conflict of interest Annexure 19	Applicable/ ~~Not Applicable~~	YES / NO

NOTE: Strike off YES or NO as applicable. Tender not accompanied by the prescribed applicable documents listed above are liable to be summarily rejected.

DATE:

Sign. of the AUTHORISED SIGNATORY
(With Name, Designation and Company seal)

ANNEXURE - 2

OFFER FORWARDING LETTER / TENDER SUBMISSION LETTER

(To be typed and submitted in the Letter Head of the Company/Firm of Bidder)

To

Sr. Manager, MM/RM & Steel, BHEL, Trichy - 620014

Dear Sir,

Sub: Submission of Offer against **Enquiry No. 1402600001 dt.08.01.2026**

Having examined the tender documents against your **Enquiry No. 1402600001 dt.08.01.2026** and having understood the provisions of the said tender documents and having thoroughly studied the requirements of BHEL related to the Supply of Goods tendered, we hereby submit our offer for the proposed Goods supply in accordance with terms and conditions mentioned in the tender documents, at the prices quoted by us and as per the indicated delivery schedule.

~~Should our Offer be accepted by BHEL for Award, I/We further agree to furnish 8Performance Security9 for the Goods as provided for in the Tender Conditions within the stipulated time as may be indicated by BHEL.~~

I/We further agree to supply all the Goods referred to in the said Tender documents upon the terms and conditions contained or referred to therein and as detailed in the appendices annexed thereto.

~~I/We have deposited herewith the requisite Earnest Money Deposit (EMD) as per details furnished in the Check List.~~

Authorised Representative of Bidder
Signature:
Name:
Address:

Date:
Place:

ANNEXURE- 3

CERTIFICATE OF NO DEVIATION

(To be Typed & submitted in the Letter Head of the Company/Firm of Bidder)

To

Sr. Manager, MM/RM & Steel, BHEL, Trichy - 620014

Dear Sir,

Subject: **No Deviation Certificate**

Ref: 1) **Enquiry No. 1402600001 dt.08.01.2026**

2) All other pertinent issues till date

We hereby confirm that we have not changed/ modified/materially altered any of the tender documents as downloaded from the website/ issued by BHEL and in case of such observance at any stage, it shall be treated as null and void.

We also hereby confirm that we have neither set any Terms and Conditions and nor have we taken any deviation from the Tender conditions together with other references applicable for the above referred GeM Bid.

We further confirm our unqualified acceptance to all Terms and Conditions, unqualified compliance to Tender Conditions.

We confirm to have submitted offer in accordance with tender instructions and as per aforesaid references.

Thanking you,

Yours faithfully,

(Signature, date & seal of authorized representative of the bidder)

Date:

Place:

ANNEXURE- 4

UNDERTAKING

(To be typed and submitted in the Letter Head of the Company/Firm of Bidder)

To,

Sr. Manager, MM/RM & Steel, BHEL, Trichy - 620014

Dear Sir/Madam,

Sub: DECLARATION REGARDING INSOLVENCY/ LIQUIDATION/ BANKRUPTCY PROCEEDINGS

Ref: Enquiry No. 1402600001 dt.08.01.2026

I/We, _____ declare that,

I/We am/are not admitted under insolvency resolution process or liquidation under Insolvency and Bankruptcy Code, 2016, as amended from time to time or under any other law as on date, by NCLT or any adjudicating authority/authorities.

Sign. of the AUTHORISED SIGNATORY
(With Name, Designation and Company seal)

Place:
Date:

ANNEXURE 5

DECLARATION BY AUTHORISED SIGNATORY OF BIDDER

(To be typed and submitted in the Letter Head of the Company/Firm of Bidder)

To,

Sr. Manager, MM/RM & Steel, BHEL, Trichy - 620014

Dear Sir,

Sub: **Declaration by Authorised Signatory**

Ref: 1) **Enquiry No. 1402600001 dt.08.01.2026**

2) All other pertinent issues till date

I/We, hereby certify that all the information and data furnished by me with regard to the above Tender Specification are true and complete to the best of my knowledge. I have gone through the specifications, conditions, stipulations and all other pertinent issues till date, and agree to comply with the requirements and Intent of the specification.

I further certify that I am authorised to represent on behalf of my Company/Firm for the above mentioned tender and a valid Power of Attorney to this effect is also enclosed.

Yours faithfully,

(Signature, Date & Seal of Authorized Signatory of the Bidder)

Date:

ANNEXURE-6

DECLARATION BY AUTHORISED SIGNATORY OF BIDDER

(To be typed and submitted in the Letter Head of the Company/Firm of Bidder)

To

Sr. Manager, MM/RM & Steel, BHEL, Trichy - 620014

Dear Sir,

Sub: Declaration by Authorised Signatory regarding Authenticity of submitted documents.

Ref :- 1) GeM Bid Ref No. & Date: **Enquiry No. 1402600001 dt.08.01.2026**

2) All other pertinent issues till date

I/We, hereby certify that all the documents submitted by us in support of possession of <Qualifying Requirements= are true copies of the original and are fully compliant required for qualifying/supplying in the bid and shall produce the original of same as and when required by Bharat Heavy Electricals Limited.

I / We hereby further confirm that no tampering is done with documents submitted in support of our qualification as bidder. I / We understand that at any stage (during bidding process or while executing the awarded contract) if it is found that fake / false / forged bid qualifying / supporting documents / certificates were submitted, it would lead to summarily rejection of our bid / termination of contract. BHEL shall be at liberty to initiate other appropriate actions as per the terms of the Bid / Contract and other extant policies of Bharat Heavy Electricals Limited.

Yours faithfully,

(Signature, Date & Seal of Authorized Signatory of the Bidder)

Place:

Date:

ANNEXURE- 7

NON-DISCLOSURE CERTIFICATE

(To be Typed & submitted in the Letter Head of the Company/Firm of Bidder)

I/We understand that **BHEL-HPBP, Trichy** is committed to Information Security Management System as per their Information Security Policy.

Hence, I/We M/s.---------- who are submitting offer for supplying Goods to **BHEL-HPBP, Trichy** against **Enquiry No. 1402600001 dt.08.01.2026** hereby undertake to comply with the following in line with Information Security Policy of **BHEL-HPBP, Trichy**.

- To maintain confidentiality of documents & information which shall be used during the execution of the Contract.

- The documents & information shall not be revealed to or shared with third party which shall not be in the business interest of **BHEL-HPBP, Trichy**.

(Signature, date & seal of Authorized Signatory of the bidder)

Date:

Place:

ANNEXURE 10

DECLARATION

(To be typed and submitted in the Letter Head of the Company/Firm of Bidder)

Date: _____

TO

Sr. Manager, MM/RM & Steel, BHEL, Trichy - 620014

Dear Sir/ Madam,

Sub: Details of related firms and their area of activities

Please find below details of firms owned by our family members that are doing business/ registered for same item with BHEL, **NOT APPLICABLE** (if applicable fill the following table)

1	Material Category/ Work Description	
	Name of Firm	
	Address of Firm	
	Nature of Business	
	Name of Family Member	
	Relationship	
2	Material Category/ Work Description	
	Name of Firm	
	Address of Firm	
	Nature of Business	
	Name of Family Member	
	Relationship	

Note: I certify that the above information is true and I agree for penal action from BHEL in case any of the above information furnished is found to be false.

Regards,

From: M/s
Supplier Code:
Address:

ANNEXURE 11

DECLARATION FOR RELATION IN BHEL

(To be typed and submitted in the Letter Head of the Company/Firm of Bidder failing which the offer of Bidder is liable to be summarily rejected)

TO

Sr. Manager, MM/RM & Steel, BHEL, Trichy - 620014

Dear Sir,

Sub: Declaration for relation in BHEL

Ref: 1) Enquiry No. 1402600001 dt.08.01.2026

I/We hereby submit the following information pertaining to relation/relatives of Proprietor/Partner(s)/ Director(s) employed in BHEL

Tick any one as applicable

1. The Proprietor, Partner(s), Director(s) of our Company/Firm DO NOT have any relation or relatives employed in BHEL

OR

2. The Proprietor, Partner(s), or Director(s) of our Company/Firm HAVE relation/relatives employed in BHEL and their particulars are as below:
   i.
   ii.

(Signature, Date & Seal of Authorized Signatory of the Bidder)

Note:

1. Attach separate sheet, if necessary.
2. If BHEL Management comes to know at a later date that the information furnished by the Bidder is false, BHEL reserves the right to take suitable against the Bidder/Contractor.

ANNEXURE 12

DECLARATION REGARDING MINIMUM LOCAL CONTENT IN LINE WITH REVISED PUBLIC PROCUREMENT (PREFERENCE TO MAKE IN INDIA), ORDER 2017 DATED 04TH JUNE, 2020 AND SUBSEQUENT ORDER(S)

(To be typed and submitted in the Letter Head of the Entity/Firm providing certificate as applicable)

TO

Sr. Manager, MM/RM & Steel, BHEL, Trichy - 620014

Dear Sir,

Sub: Declaration reg. minimum local content in line with Public Procurement (Preference to Make in India), Order 2017-Revision, dated 04th June, 2020 and subsequent order(s).

Ref: **1) Enquiry No. 1402600001 dt.08.01.2026**

2) All other pertinent issues till date

We hereby certify that the items/works/services offered by M/s. ---------- (specify the name of the organization here) has a local content of _____ % and this meets the local content requirement for **Class I local supplier / Class II local supplier** ** as defined in Public Procurement (Preference to Make in India), Order 2017-Revision dated 04.06.2020 issued by DPIIT and subsequent order(s).

The details of the location(s) at which the local value addition is made are as follows:

1. _____ 2. _____
3. _____ 4. _____

UDIN: **(Signature, Date & Seal of Authorized**

Seal and Signature of CA **Signatory of the Bidder)**

** - Strike out whichever is not applicable.

Note:

1. Bidders to note that above format, duly filled & signed by authorized signatory, shall be submitted along with the techno-commercial offer.

2. **In case bidder quoted value is in excess of Rs.10 crores, the authorized signatory for this declaration shall necessarily be the statutory auditor or cost auditor of the company (in the case of companies) or a practising cost accountant or practicing chartered accountant (in respect of suppliers other than companies).**

3. In the event of false declaration, actions as per the above order and as per BHEL Guidelines shall be initiated against the bidder.

ANNEXURE 13

DECLARATION REGARDING COMPLIANCE TO RESTRICTIONS UNDER RULE 144 (xi) OF GFR 2017

(To be typed and submitted in the Letter Head of the Entity/ Firm providing certificate as applicable)

TO

Sr. Manager, MM/RM & Steel, BHEL, Trichy - 620014

Dear Sir,

Sub: Declaration regarding compliance to Restrictions under Rule 144 (xi) of GFR 2017

Ref: 1) Enquiry No. 1402600001 dt.08.01.2026

2) All other pertinent issues till date

I have read the clause regarding restrictions on procurement from a bidder of a country which shares a land border with India. I certify that _____ (**Specify the name of the Organization here**), ** is not from such a country **/** has been registered with the Competent Authority (attach valid registration by the Competent Authority, i.e., the Registration Committee constituted by the Dept. for Promotion of Industry and Internal Trade (DPIIT).

I hereby certify that we fulfil all requirements in this regard and is eligible to be considered.

Thanking you,
Yours faithfully,

(Signature, Date & Seal of Authorized Signatory of the Bidder)

**- Strike out whichever is not applicable.

Note: Bidders to note that in case above certification given by a bidder, whose bid is accepted, is found to be false, then this would be a ground for immediate termination and for taking further action in accordance with law and as per BHEL guidelines.

ANNEXURE 14

BANK ACCOUNT DETAILS FOR E-PAYMENT

(To be given on Letter head of the Company /Firm of Bidder, and ENDORSED (SIGNED & STAMPED) BY THE BANK to enable BHEL release payments through Electronic Fund Transfer (EFT/RTGS)

If the supplier is already registered with BHEL, Trichy, mention the vendor Code alone.

VENDOR CODE:

1. Beneficiary Name :

2. Beneficiary Account No. :

3. Bank Name & Branch :

4. City/Place :

5. 9 digit M ICR Code of Bank Branch :

6. IFSC Code of Bank Branch :

7. Beneficiary E-mail ID :
   (for payment confirmation)

NOTE: In case Bank endorsed certificate regarding above has already been submitted earlier, kindly submit photocopy of the same.

ANNEXURE 15

POWER OF ATTORNEY for SUBMISSION OF TENDER

(To be typed on non-judicial stamp paper of minimum Rs. 100/- and Notarized)

KNOW ALL MEN BY THESE PRESENTS, that I/We do hereby make, nominate, constitute and appoint Mr. ……, whose signature given below herewith to be true and lawful Attorney of M/s hereinafter called 'Company' for submitting Tender/ entering into Contract and inter alia, sign, execute all papers and to do necessary lawful acts on behalf of company with M/s Bharat Heavy Electricals Ltd, in connection with……vide **NIC Bid No./Enquiry No. 1402600001 dt.08.01.2026.**

And the Company do hereby agree to ratify and confirm all acts, deeds, things or proceedings as may be lawfully done by the said attorney and by or on behalf of the company and in the name of the company, by virtue of the powers conferred herein and the same shall be binding on the company and shall have full force and effect.

IN WITNESS WHEREOF, the common seal of the company has been hereunto affixed in the manner hereinafter appearing on the document.

Dated at _____, this _____ day of _____

Director/CMD/Partner/Proprietor

Signature of Mr. ……. (Attorney)
Attested by: Director/CMD/Partner/Proprietor

Witness

Notary Public

ANNEXURE – 19

DECLARATION REGARDING CONFLICT OF INTEREST

(To be typed and submitted in the Letter Head of the Company/Firm)

To,

Sr. Manager, MM/RM & Steel, BHEL, Trichy - 620014

Dear Sir,

Sub: Declaration regarding conflict of interest

Ref: 1) NIC Bid No./Enquiry No. 1402600001 dt.08.01.2026

Treatment of cases regarding conflict of interest:

The bidder notes that a conflict of interest would said to have occurred in the tender process and execution of the resultant contract, in case of any of the following situations:

- If its personnel have a close personal, financial, or business relationship with any personnel of BHEL who are directly or indirectly related to the procurement or execution process of the contract, which can affect the decision of BHEL directly or indirectly;

- The bidder (or his allied firm) provided services for the need assessment/ procurement planning of the Tender process in which it is participating;

- Procurement of goods directly from the manufacturers/ suppliers shall be preferred. However, if the OEM/ Principal insists on engaging the services of an agent, such agent shall not be allowed to represent more than one manufacturer/ supplier in the same tender. Moreover, either the agent could bid on behalf of the manufacturer/ supplier or the manufacturer/ supplier could bid directly but not both. In case bids are received from both the manufacturer/ supplier and the agent, bid received from the agent shall be ignored. However, this shall not debar more than one Authorised distributor (with/ or without the OEM) from quoting equipment manufactured by an Original Equipment Manufacturer (OEM) in procurements under a Proprietary Article Certificate.

- A bidder participates in more than one bid in this tender process. Participation in any capacity by a Bidder (including the participation of a Bidder as a partner/ JV member or sub-contractor in another bid or vice-versa) in more than one bid shall result in the disqualification of all bids in which he is a party. However, this does not limit the participation of an entity as a sub-contractor in more than one bid if he is not bidding independently in his own name or as a member of a JV.

The Bidder declares that they have read and understood the above aspects, and the bidder confirms that such conflict of interest does not exist and undertakes that they will not enter into any illegal or undisclosed agreement or understanding, whether formal or informal with other Bidder(s), in this regard. This applies in particular to prices, specifications, certifications, subsidiary contracts, submission or non-submission of bids or any other actions to restrict competitiveness or to introduce cartelization in the bidding process. In case, the Bidder is found having indulged in above activities, the same will be considered as a violation of the tender conditions, and suitable action shall be taken by BHEL as per extant policies/ guidelines.

(Signature, Date & Seal of Authorized Signatory of the Bidder)