Procurement of SS Fittings - Annexure A

Sl No	Schedule No	Mat.Code	Description	FITTING TYPE	Specification	Construction	DRAWING	D1 Value	Qty (No)
1	Schedule 1	921053990000	BW UEQT 33.4X3.38/21.3X3.73 SA403WP321	UNEQUAL TEE	SA403WP321	Seamless	ASMEB16.9	26.7/13.9	60
2	Schedule 2	921170010055	BW CONRED 33.4X3.38/21.3X3.73 SA403WP321	CONCENTRIC REDUCER	SA403WP321	Seamless	ASMEB16.9	26.7/13.9	60
3	Schedule 3	925244210000	BW LR 45DEG ELL OD88.9X3.05 SA403WP304H	ELBOW	SA403WP304H	Seamless	ASMEB16.9	EP STY-D, D1=82.8MM	2
4	Schedule 4	925244660000	BW LR 90DEG ELL OD114.3X3.05 SA403WP304H	ELBOW	SA403WP304H	Seamless	ASMEB16.9	D108.2	12
5	Schedule 5	925244850000	BW LR 90DEG ELL OD168.3X3.4 SA403WP304H	ELBOW	SA403WP304H	Seamless	ASMEB16.9	D161.5	9
6	Schedule 6	925246140000	BW LR 90DEG ELL OD33.4X3.38 SA403WP304H	ELBOW	SA403WP304H	Seamless	ASMEB16.9	D27.2	50
7	Schedule 7	925246230000	BW LR 90DEG ELL OD219.1X3.76 SA403WP304H	ELBOW	SA403WP304H	Seamless	ASMEB16.9	D 211.6	8
8	Schedule 8	925246260000	BW LR 45DEG ELL OD114.3X3.05 SA403WP304H	ELBOW	SA403WP304H	Seamless	ASMEB16.9	D 108.5	2
9	Schedule 9	925247360000	BW SR 90DEG ELL 273 X 4.19 SA403WP304H	ELBOW	SA403WP304H	Seamless	ASMEB16.9	D/264.7	15
10	Schedule 10	925247510000	BW LR 45DEG ELL OD168.3X3.4 SA403WP304H	ELBOW	SA403WP304H	Seamless	ASMEB16.9	D 161.5	2
11	Schedule 11	925249010000	BW LR 90DEG ELL OD88.9X3.05 SA403WP304H	ELBOW	SA403WP304H	Seamless	ASMEB16.9	D/82.8	9
12	Schedule 12	925254530100	BW UEQT 114.3X3.05/88.9X3.05 SA403WP304H	UNEQUAL TEE	SA403WP304H	Seamless	ASMEB16.9	D 108.2/ D 82.8	2
13	Schedule 13	925256180000	BW EQT OD114.3X3.05 SA403WP304H	EQUAL TEE	SA403WP304H	Seamless	ASMEB16.9	D108.2	1
14	Schedule 14	925257180000	BW EQT OD33.4X3.38 SA403WP304H	EQUAL TEE	SA403WP304H	Seamless	ASMEB16.9	D27.2	62
15	Schedule 15	925259550000	BW UEQT 219.1X3.76/168.3X3.4 SA403WP304H	UNEQUAL TEE	SA403WP304H	Seamless	ASMEB16.9	D 211.6/D 161.5	2
16	Schedule 16	925259560000	BW EQT OD219.1X3.76 SA403WP304H	EQUAL TEE	SA403WP304H	Seamless	ASMEB16.9	D 211.6	3
17	Schedule 17	925276270000	BW RED 114.3X3.05/88.9X3.05 SA403WP304H	CONCENTRIC REDUCER	SA403WP304H	Seamless	ASMEB16.9	D 108.2 /D 82.8	4
18	Schedule 18	925279670000	BW RED 219.1X3.76/168.3X3.4 SA403WP304H	CONCENTRIC REDUCER	SA403WP304H	Seamless	ASMEB16.9	STY'D', 211.6/161.5	4

Note
TDG 102 R10
QPG 46 R03
SUPPLIES AS DTS (ANNEXURE-B) IN 3 MONTHS

Procurement of SS Fittings - Annexure B - Project details

Sl No	Schedule No	Mat.Code	Description	Project details	Qty (No)
1	Schedule 1	921053990000	BW UEQT 33.4X3.38/21.3X3.73 SA403WP321	APL Raigarh 2x800 MW Ph II U1	20
				APL Raipur 2x800 MW Ph II U1	20
				Mirzapur MTEUPPL 2x800 MW Ph I U1	20
2	Schedule 2	921170010055	BW CONRED 33.4X3.38/21.3X3.73 SA403WP321	APL Raigarh 2x800 MW Ph II U1	20
				APL Raipur 2x800 MW Ph II U1	20
				Mirzapur MTEUPPL 2x800 MW Ph I U1	20
3	Schedule 3	925244210000	BW LR 45DEG ELL OD88.9X3.05 SA403WP304H	TALCHER TPP STG III (2X660MW) UNIT-7	2
4	Schedule 4	925244660000	BW LR 90DEG ELL OD114.3X3.05 SA403WP304H	TALCHER TPP STG III (2X660MW) UNIT-7	12
5	Schedule 5	925244850000	BW LR 90DEG ELL OD168.3X3.4 SA403WP304H	TALCHER TPP STG III (2X660MW) UNIT-7	9
6	Schedule 6	925246140000	BW LR 90DEG ELL OD33.4X3.38 SA403WP304H	TALCHER TPP STG III (2X660MW) UNIT-7	50
7	Schedule 7	925246230000	BW LR 90DEG ELL OD219.1X3.76 SA403WP304H	TALCHER TPP STG III (2X660MW) UNIT-7	8
8	Schedule 8	925246260000	BW LR 45DEG ELL OD114.3X3.05 SA403WP304H	TALCHER TPP STG III (2X660MW) UNIT-7	2
9	Schedule 9	925247360000	BW SR 90DEG ELL 273 X 4.19 SA403WP304H	TALCHER TPP STG III (2X660MW) UNIT-7	15
10	Schedule 10	925247510000	BW LR 45DEG ELL OD168.3X3.4 SA403WP304H	TALCHER TPP STG III (2X660MW) UNIT-7	2
11	Schedule 11	925249010000	BW LR 90DEG ELL OD88.9X3.05 SA403WP304H	TALCHER TPP STG III (2X660MW) UNIT-7	9
12	Schedule 12	925254530100	BW UEQT 114.3X3.05/88.9X3.05 SA403WP304H	TALCHER TPP STG III (2X660MW) UNIT-7	2
13	Schedule 13	925256180000	BW EQT OD114.3X3.05 SA403WP304H	TALCHER TPP STG III (2X660MW) UNIT-7	1
14	Schedule 14	925257180000	BW EQT OD33.4X3.38 SA403WP304H	APL Raigarh 2x800 MW Ph II U1	20
				APL Raipur 2x800 MW Ph II U1	20
				Mirzapur MTEUPPL 2x800 MW Ph I U1	20
				TALCHER TPP STG III (2X660MW) UNIT-7	2
15	Schedule 15	925259550000	BW UEQT 219.1X3.76/168.3X3.4 SA403WP304H	TALCHER TPP STG III (2X660MW) UNIT-7	2
16	Schedule 16	925259560000	BW EQT OD219.1X3.76 SA403WP304H	TALCHER TPP STG III (2X660MW) UNIT-7	3
17	Schedule 17	925276270000	BW RED 114.3X3.05/88.9X3.05 SA403WP304H	TALCHER TPP STG III (2X660MW) UNIT-7	4
18	Schedule 18	925279670000	BW RED 219.1X3.76/168.3X3.4 SA403WP304H	TALCHER TPP STG III (2X660MW) UNIT-7	4

BHARAT HEAVY ELECTRICALS LIMITED TRICHY PIPING QUALITY DEPT.	STANDARD QUALITY ASSURANCE PLAN FOR BUTT WELDED FITTINGS CONFORMING TO ASME SA 234, SA 403 AND SA815	QP NO : QPG: 46 REV.NO : 03 DATE : 07-10-2024

REF: BHEL TDC No. : TDG:102 (Latest Rev. Attached as annexure)

SL. NO.	COMPONENT OR OPERATION	CHARACTERISTICS	CLASS	TYPE OF CHECK	QUANTUM OF CHECK	REFERENCE DOCUMENT	ACCEPTANCE STANDARD	RECORD		AGENCY		REMARKS
								Type	Req	M	B	
1	2	3	4	5	6	7	8	9	10	11	12	15
1.0	i) P91/P92 requirement - RAW MATERIAL sources for P91/P92 shall be as per QCP:19(Latest Rev.Attached as annexure); Any other source proposed by the vendor shall be subjected to BHEL approval. ii) IBR requirement- The Test Certificate for all material specifications received from RM manufacturer shall meet IBR requirements for SA 234 .											
1.1	Seamless Pipe / Forging	Chemical and Mechanical property & Hydro Test / UT	Major	Verification of MTC & Ladle Analysis Report	100%	As per Required Material (ASME) Specification	Form III-A / Form III-G - (for CS, AS) Mill TC - (for SS)	√√	P	R		Refer Note:1
1.2		Radiaactive contamination for SS & Duplex SS	Major	Measurement	100%	Acceptance limits: Shall be less than 0.1 milli Rontgen (MR) per hr or 1 micro Sievert per hr.	Mill TC - (for SS)	√√	P	R		Either clause 1.2 or 4.2
1.3		Surface defect & Dimensions Outer Dia.,Thk.etc	Major	Visual & Measurement	100%	As per Spec	Raw Material Inspection Report	√	P	V		
1.4		Raw Material Check (chemical)	Major	PMI	100%	As per Required Material (ASME) Specification						
1.5		Hardness Test for P91 & P92 material	Major	Measurement	100%	As per Spec						
1.6	Plates	Co-relation & verification of Mill TCs for										
1.7		a) Chemical & Mechanical	Major	Verify	100%	BHEL Drawing , Material Spec.	Form IV - (for CS, AS) Mill TC - (for SS)	√√	P	R		
1.8		b) Soundness	Major	NDE - UT $	100%	SA578 Acceptance level - B						$ t > 10 mm
1.9		c) Dimension & Surface finish	Major	Measurement & Visual	100%	BHEL Drawing , Material Spec.						

LEGEND: M:- Manufacturer; B:- BHEL/ BHEL Nominated Agency; P - Perform; V - Verification; R-Review; W - Witness; H - Hold ;

LEGEND: Record Requirement - " √ "- Documents required for verification only; "√√" - Documents required for Review and Witness and same to be submitted to BHEL.

PREPARED BY: M MANOJ PANDI / MGR PIPING-QA	REVIEWED BY: K SARANYA / MGR PIPING-QA	APPROVED BY: S JEGAN / SM PIPING QUALITY	PAGE : 1 of 5

REF: BHEL TDC No. : TDG:102 (Latest Rev. Attached as annexure)

SL. NO.	COMPONENT OR OPERATION	CHARACTERISTICS	CLASS	TYPE OF CHECK	QUANTUM OF CHECK	REFERENCE DOCUMENT	ACCEPTANCE STANDARD	RECORD		AGENCY		REMARKS
								Type	Req	M	B	
1	2	3	4	5	6	7	8	9	10	11	12	15
2.0	**IN PROCESS INSPECTION**											
2.1	Fitting Forming / Forging Procedure	Procedure qualification	Major	Review	100%	ASME SA 234 & BHEL TDG:102		BHEL Approved Procedure	√	P	V	Procedure shall be approved by BHEL.
2.2	NDE - MT, UT and RT Procedure	Procedure Review	Major	Review	100%	ASME SA 234 & BHEL TDG:102		BHEL Approved Procedure	√	P	V	Procedure shall be approved by BHEL.
2.3	Forming/ Forging of pipe fittings	Process parameters	Major	Temperature, Measurement & Visual	100%	ASME SA 234 & Appd.Procedure		Internal report	√√	P	W*	W* : For 1st off trial at random
2.4	Heat Treatment (HT)	Rate of Heating, Rate of Cooling & Soaking time	Critical	Temp & Time graph	100%	ASME SA 234 & BHEL TDG:102 Clause: 3.2, 3.3, 3.4, 3.5		HT Chart	√√	P	R / W*	W* : For 1st off trial at random
2.5	Welding	Procedure qualification	Major	Review	100%	ASME SA 234 & BHEL TDG:102 Clause 3.1.(ii) & 3.5 Refer Note : 4 & 5		WPS, PQR, WPQ	√	P	V	Welded Fittings shall be made from Two - Halves.
2.6	Post weld Heat Treatment (PWHT)	Rate of Heating, Rate of Cooling & Soaking time	Critical	Temp & Time graph	100%	ASME SA 234 & BHEL TDG:102 Refer Note : 2		PWHT Chart	√√	P	R / W*	W* : For 1st off trial at random
3.0	**TESTS**											
3.1	Test Piece	Selection of Test coupons	Major	Measurement & Marking	One Sample / Heat / HT Batch	As per ASTM A370 Refer Note : 4 & 6		Report	√√	P	R / W*	W* : For 1st off trial at random
3.2	Test Piece	Product Analysis	Major	Chemical Composition	One Sample / Heat	ASME SA 234 & BHEL TDG:102		Test Report	√√	P	R / W*	W* : For 1st off trial at random
3.3	Test Piece	YS, UTS, % Elongation	Major	Mechanical	One Sample / Heat / HT Batch	ASME SA 234 & BHEL TDG:102		Test Report	√√	P	R / W*	W* : For 1st off trial at random
3.4	Finished Products	Hardness	Major	Hardness test	100% / 10%	ASME SA 234 & BHEL TDG:102		Test Report	√√	P	W	100% for WP91 & 92; 10% for others

LEGEND: M:- Manufacturer; B:- BHEL/ BHEL Nominated Agency; P - Perform; V - Verification; R-Review; W - Witness; H - Hold ;

LEGEND: Record Requirement - " √ "- Documents required for verification only; "√√" - Documents required for Review and Witness and same to be submitted to BHEL.

REF: BHEL TDC No. : TDG:102 (Latest Rev. Attached as annexure)

SL. NO.	COMPONENT OR OPERATION	CHARACTERISTICS	CLASS	TYPE OF CHECK	QUANTUM OF CHECK	REFERENCE DOCUMENT	ACCEPTANCE STANDARD	RECORD		AGENCY		REMARKS
								Type	Req	M	B	
1	2	3	4	5	6	7	8	9	10	11	12	15
3.5	Finished Products	Volumetric Defect for OD ≥ 219 mm or WT ≥ 6 mm.	Major	NDE - UT	100% / 10%	ASTM E213 - longitudinal notch of 5% - For Pipe Fittings ASTM A578 Level-B - For Plate		Test Report	√√	P	W	100% for WP91 & 92 ; 10% for others
3.6	Finished Products	Sub-surface Defect for all sizes	Critical	NDE - MT	100% / 10%	ASTM E709	ASME B31.1 Cl. 136.4.3	Test Report	√√	P	W	100% for WP91 & 92 ; 10% for others
	Finished Products			NDE - DPT for SS & Duplex SS	100% / 10%	ASTM E165	No linear indications	Test Report	√√	P	W	
3.7	Finished Products	Volumetric Defect - Welded Fittings	Major	NDE - RT	100%	ASME SEC-V & ASME SecVIII Div-1, UW-51		Test Report	√√	P	R*	R* - Review of RT films
3.8	Finished Products	Photomicrograph test & Microstructure for WP91 & 92 Fittings	Major	Metallographic test	One Sample / Heat / HT Batch	BHEL TDG:102 Clause 4.0.e (No micro fissures. Microstructure shall show tempered martensite. Grain growth if any has to be examined further. Delta ferrite for Gr 92 - 3% max)		Test Report (Magnification at 500x)	√√	P	W	Photomicrographs shall be provided as records for review & acceptance and future in-service reference
3.9	PMI for AS, SS & Duplex SS fittings	Chemical	Major	PMI	100%	ASME SA 234, SA 403 , SA 815 & BHEL TDG:102 Clause 5.0		Test Report	√√	P	W	
3.10	Burst Test	Performance & Design Proof	Critical	Hydro Test	One / Type (on similar Fitting$)	ASME B 16.9 & ASME SA 234		Test Report	√	P	V	$ - As allowed in relevant standard
4.0	**FINAL INSPECTION on Finished Products**											
4.1	Dimensional Inspection	Surface check, Bend angle, Radius, End-to-end dimn, Ovality, Thickness, Wrinkles, d1 at ends, Edge preparation & other dimensions as per Drg.	Critical	Visual & Measurement	100%	ASME B16.9 / BHEL Drg BHEL TDG:102 Clause 6.0 & P.O. for D1 details		Report; [Thickness Report format as Doc No. - TDG 102 : 001 for Elbow & TDG 102 : 002 for Tee]	√√	P	W	Minimum thickness measured at any location on the finished fitting shall be not less than 0.875 of the specified nominal thickness.

LEGEND: M:- Manufacturer; B:- BHEL/ BHEL Nominated Agency; P - Perform; V - Verification; R-Review; W - Witness; H - Hold ;

LEGEND: Record Requirement - " √ "- Documents required for verification only; "√√" - Documents required for Review and Witness and same to be submitted to BHEL.

REF: BHEL TDC No. : TDG:102 (Latest Rev. Attached as annexure)

SL. NO.	COMPONENT OR OPERATION	CHARACTERISTICS	CLASS	TYPE OF CHECK	QUANTUM OF CHECK	REFERENCE DOCUMENT	ACCEPTANCE STANDARD	RECORD		AGENCY		REMARKS
								Type	Req	M	B	
1	2	3	4	5	6	7	8	9	10	11	12	15
4.2	Radiaactive contamination for SS & Duplex SS	Radioactivity	Major	Measurement	100%	BHEL TDG:102 Clause 4.0.h		Report	√√	P	W#	W# - 10%; Either clause 1.2 or 4.2
4.3	Surface Protection	Paint TC	Major	Verification of TC	100%	BHEL TDG:102 Clause 7.1 & P.O for Additional req		Paint TC	√√	P	R	
4.4	Finished Products	Marking	Major	Visual	100%	BHEL TDG:102 Clause 7.3 & P.O for Additional req		Report Format as Doc No. - TDG 102 : 003	√√	P	W#	W# - 10%
4.5	Finished Products	Color coding	Major	Visual	100%	BHEL TDG:102 Clause 7.2 & P.O for Additional req			√√	P	W#	W# - 10%
4.6	Painting	Finish and Workmanship (Chalking, Peeling, Flaking, sagging, Ugly Brushmark, Uneven/over coating and other painting flaws are not accepted) (Weld Primer to be applied on weld edge)	Major	Visual	100%	BHEL TDG:102 Clause 7.1 & P.O for Additional req			√√	P	W	W - 100%
4.7		Paint Thickness	Major	DFT	100%	BHEL TDG:102 Clause 7.1 & P.O for Additional req			√√	P	W#	W# - 10%
4.8	Pre Dispatch Inspection	Preservation & Packing	Major	Visual	100%	BHEL TDG:102 Clause 8.0 & P.O for Additional req		Report Format as Doc No. - TDG 102 : 004	√√	P	R	
5	DOCUMENTATION & CERTIFICATION											
5.1	Documentation Clearance	Manufature Test Certificate	Critical	Verification	100%	BHEL TDG:102 Clause 9.0 & P.O for Additional req			√√	P	H	
5.2		IBR Certification	Critical	all tests as per IBR	100%	IBR		FORM III-C / FORM III-I	√√	P	H	Not applicable for SS & Duplex SS
5.3		Other Reports	Critical	Verification	100%	All reports as required in this QAP with proper correlation.		Report	√√	P	H	Note-14

LEGEND: M:- Manufacturer; B:- BHEL/ BHEL Nominated Agency; P - Perform; V - Verification; R-Review; W - Witness; H - Hold ;

LEGEND: Record Requirement - " √ "- Documents required for verification only; "√√" - Documents required for Review and Witness and same to be submitted to BHEL.

REF: BHEL TDC No. : TDG:102 (Latest Rev. Attached as annexure)

SL. NO.	COMPONENT OR OPERATION	CHARACTERISTICS	CLASS	TYPE OF CHECK	QUANTUM OF CHECK	REFERENCE DOCUMENT	ACCEPTANCE STANDARD	RECORD		AGENCY		REMARKS
								Type	Req	M	B	
1	2	3	4	5	6	7	8	9	10	11	12	15

NOTES :-

1.0 (a) If the raw materials are received directly from RM Manufacturer's works, the material shall be accepted based on (i)correlation of Heat number on material with TC and (ii)verification of TCs.

(b) If the materials are received through Dealers place, check test (Chemical and Mechanical tests on one sample per Heat/ size) shall be done in addition to the above for accepting the material

POST FORMING HEAT TREATMENT :-

For Gr91 & 92 materials :

Normalise at 1040 - 1080 deg.C & Temper at 760-780 deg.C; Soaking shall be 2Hrs minimum for thickness upto 50mm and 4Hrs minimum for thickness 51-100mm

Normalising and Tempering shall be carried out within 72 hours after completion of forming.

The items shall be kept dry and stress free.

2.0 The temperature shall be brought down to room temperature after hot forming before normalizing and also after normalizing before tempering

Normalising and tempering of Gr91 & 92 shall be done encompassing the entire component.

SA234 WPB : As per Specn; **SA105 & SA234WPC :** Normalised; **SA234 WP11/WP12/WP22 :** Normalised & Tempered.

POST WELDING HEAT TREATMENT :

For Gr91 & 92 materials : PWHT at 760 ± 10 deg.C; Soaking shall be at the rate of 2.5 minutes per mm of thickest weld - minimum `1 hr. Preheat shall be maintained till welding is completed. Interpass temperature shall be limited to 350 deg C. After post heating, joints shall be slowly cooled at room temperature and then kept at that temperature for a maximum of 72 hrs before PWHT.

3.0 Forged Fitting shall be forged to the shape with a minimum forge reduction ratio of 1:4. Forged Fitting shall not be machined from a forged block.

4.0 Seal tranfer on pieces to be cut shall be done by BHEL inspector & IBR for Gr-91 & 92 materials and IBR for other than Gr-91 & 92 materials.

5.0 Welding consumables shall be approved by BHEL.

6.0 Chemical & Mechanical tests shall be performed at NABL approved laboratories.

7.0 All NDE procedures shall be submitted to BHEL for review and approval.

8.0 NDE procedures shall have Level-III certified personnel approval incase of in-house. Incase of non-availability of inhouse facility NDE shall be performed by NABL approved laboratories.

9.0 Gas cutting & Plasma cutting are prohibited for Gr91 & 92 material.

10.0 All items shall be inspected and cleared by BHEL / BHEL authorised Inspection agency & IBR/IBR Authorized Inspecting Authorities.

11.0 Necessary IBR Requirements shall be fulfilled and IBR documents to be submitted.

12.0 Documents Marked as "√" for verification only shall be submitted to BHEL / BHEL authorised Inspection agency on demand

13.0 1st off trial Documents shall be verified by BHEL / BHEL authorised Inspection agency before review of present document

14.0 For TPIA - All applicable documents as per QAP to be attested and uploaded in BHEL CQIR portal before issue of Final IR.

LEGEND: M:- Manufacturer; B:- BHEL/ BHEL Nominated Agency; P - Perform; V - Verification; R-Review; W - Witness; H - Hold ;

LEGEND: Record Requirement - " √ "- Documents required for verification only; "√√" - Documents required for Review and Witness and same to be submitted to BHEL.

PREPARED BY: M MANOJ PANDI / MGR PIPING-QA	REVIEWED BY: K SARANYA / MGR PIPING-QA	APPROVED BY: S JEGAN / SM PIPING QUALITY	PAGE : 5 of 5

1.0 SCOPE: -

The fittings shall meet Indian Boiler Regulations (IBR) except SS and Duplex SS (UNS32205) specifications unless otherwise specified, and the following requirements in addition to the standards specified in the Purchase Order (PO).

2.0 RAW MATERIALS: -

a) All fittings shall be of seamless construction unless otherwise specified in the purchase order. Pipes used for manufacturing of seamless fittings shall be seamless pipes or forgings only.
b) The raw material used for fittings shall meet the respective specification. The test certificate shall be furnished with Traceability.
c) Raw material Steel for IBR items to be inspected at Mill & test certificate countersigned by IBR Authorized Inspecting Authority, if the mill is not approved under IBR as well-known steel maker.
d) For Gr-92 items : Si : 0.10-0.50% ; Ni : 0.30max and Cu : 0.25 max. (both Ladle & Product analysis)

3.0 MANUFACTURING & TESTING REQUIREMENTS:

3.1 MANUFACTURING PROCESS :

(i) Seamless Fittings:-

A) Tees & Reducers : Upto 80mm thickness : Formed Type.
Above 80mm thickness Formed or Forged type.

B) Elbows : Formed type for all thickness

(ii) Welded Fittings:- Supplied only if indicated in P.O and shall be of **Two-Half construction.**

3.2 Machined Fittings (Max size permitted 4"- directly from bar) – Reducers, Couplings & End Caps : Fittings machined from Castings are **prohibited.**

Starting material Rolled or Forged Bars (Killed Steel)	Heat treatment	CS – Normalised ; AS – Normalised & Tempered SS & Duplex SS (UNS32205) – Solution Annealed
	NDE – UT	To be done after Heat treatment. For size above 40mm – to be done as per ASTM A 388 Acceptance to - ASME Sec.VIII Div.2 Cl.3.3.4. Actual measured notch depth to be specified in Test Certificate.
Finished fitting (after machining)	Heat treatment	Not required
	NDE (for all sizes)	• MT (100%) - Procedure - As per ASTM E709. No linear indications are acceptable (Linear Indication : Length ≥ 3XWidth) For WP91 & WP92 Wet MPI shall be done • LPI – **SS & Duplex SS (UNS32205)**: Shall be done as per ASTM E165. No linear indications are acceptable.
	Hardness	Base material Hardness for. WPB, WPC, WP11, WP12, WP22 – 197 HBW max. WP91 - 190-250 HBW – 100% to be checked WP92 - 196-250 HBW – 100% to be checked Duplex SS (UNS32205) – 300BHN max
	Dimension	ASME B16.9 or as per Engineering Drawing indicated in Purchase Order.
	Bend Test (for IBR items)	Specimen: 19mm. Thickness (t) x 25.4mm width - cold bent 180 deg. over thin section without fracture, mandrel radius: CS :<=6.35 mm. AS, SS : <=1.5 times specimen thick.

J.NANTHINI MGR/ QA	PRIYA BALAJI SDGM / MM	C. SARAVANAN AGM / ENGINEERING	S.JEGAN SR.MGR / QUALITY
Prepared by	Reviewed by		Approved by

3.3 Seamless Formed Fittings – Ells, Tees, Reducers, Dished end (End cover / Cap)

Starting material:	Heat treatment shall be as per starting material specification	CS – Normalised AS – Normalised & Tempered SS & Duplex SS (UNS32205) – Solution Annealed
1)Tube & Pipe	NDE – UT	UT shall be done as per - ASTM E 213 with longitudinal notch of 5% wall thickness with max.1.5mm and min. 0.3mm. Actual measured notch depth to be specified in Test Certificate.
2) Forged blank (For End covers)	NDE – UT	For size above 40mm ; UT shall be done as per - ASTM A 388 In acceptance to - ASME Sec.VIII Div.2 Cl.3.3.4. Actual measured notch depth to be specified in Test Certificate.
3) Plate	NDE – UT	For size above 10mm SA 578, Acceptance Level – B. Actual measured notch depth to be specified in Test Certificate.
Finished fitting (cold/hot forming)	Heat treatment after forming	Shall be done as per SA234 and follow below table for heat treatment values. (see table below)

Material	Heat Treatment Temp, °C		Soaking time, hr/in	
	Normalising	Tempering	Normalising	Tempering
CS- WPB & WPC	870-900	-	1/2	-
AS–WP11 & WP12	920-960	640-670	1/2	1
AS–WP22	920-960	680-710	1/2	1
AS- WP91	1040-1080	760-780	1/2	1
AS- WP92	1040-1080	760-780	1/2	1

Stainless Steel - All grades **& Duplex SS (UNS32205):** - Solution Annealed: 1050-1100 Deg C
Soaking time : ½ hr per inch with minimum 15 minutes
Note: Normalising shall be done for a minimum time of 30 min while tempering to be done for a minimum time of 60min for all materials except SS & Duplex SS (UNS32205).

	NDE (for all sizes) – Except for Plate formed Dished end	• MT (100%) - Shall be as per - ASTM E709 No linear indications are acceptable. For WP91 & WP92 Wet MPI shall be done. • LPI – **SS & Duplex SS (UNS32205)**: Shall be done as per ASTM E165. No linear indications are acceptable.
	NDE–for Plate formed Dished end	For Plate Formed Dished end – 100% MT as per - ASTM E709 on both inner and outer surfaces of Knuckle radius and weld ends. No linear indications are acceptable. UT shall be as per A578 Level-B. Actual measured notch depth to be specified in Test Certificate.
	NDE – UT For OD >/= 219mm **or** W.T >/= 6mm	If made from Pipe & Tube – Shall be done as per - ASTM E 213 with longitudinal notch of 5% wall thickness with max.1.5mm and min. 0.3mm. Actual measured notch depth to be specified in Test Certificate. If made from Forging - Shall be as per - ASTM A 388 In acceptance to - ASME Sec.VIII Div.2 Cl.3.3.4. Actual measured notch depth to be specified in Test Certificate.
	Hardness	Base material Hardness for WPB, WPC, WP11, WP12, WP22 – 197 HBW max. WP91 - 191-250 HBW – 100% to be checked WP92 - 196-250 HBW – 100% to be checked Duplex SS (UNS32205) – 300HBW max
	Dimension	ASME B16.9, As per Engineering drawing indicated in Purchase Order. The ends of reducers shall have a straight portion of Minimum 13mm.
	Bend Test for IBR iems (if starting material is forged blank)	Specimen: 25.4 mm x 19 mm thick - cold bent 180 deg. over thin section without fracture, internal radius of bend: CS :<=6.35 mm. AS, SS: <=1.5 times specimen thick.

3.4 Forged Fittings –Tees, Reducers, Couplings, Flanges & Dished End (End cover/Cap)

Shall be forged to the shape with a minimum forge reduction ratio of 1:4. Fitting shall not be machined from a forged block.

<table>
<tr><td rowspan="2">Starting material:
Rolled or Forged Bars, Blooms, Billets (Killed steel)</td><td>Heat treatment shall be as per starting material specification</td><td>CS – Normalised
AS – Normalised & Tempered
SS & Duplex SS (UNS32205) – Solution Annealed</td></tr>
<tr><td>NDE – UT</td><td>To be done for diameter or thickness above 40mm
Procedure - As per ASTM A388
In acceptance to - ASME Sec.VIII Div.2 Cl.3.3.4. Actual measured notch depth to be specified in Test Certificate.</td></tr>
<tr><td rowspan="7">Finished fitting</td><td>Heat treatment
After forging (cold/hot forging)</td><td>Shall be done as per SA234 and follow below table for heat treatment values.
<table>
<tr><th rowspan="2">Material</th><th colspan="2">Heat Treatment Temp,°C</th><th colspan="2">Soaking time, hr/in</th></tr>
<tr><th>Normalizing</th><th>Tempering</th><th>Normalizing</th><th>Tempering</th></tr>
<tr><td>CS- WPB & WPC</td><td>870-900</td><td>-</td><td>1/2</td><td>-</td></tr>
<tr><td>AS–WP11 & WP12</td><td>920-960</td><td>640-670</td><td>1/2</td><td>1</td></tr>
<tr><td>AS–WP22</td><td>920-960</td><td>680-710</td><td>1/2</td><td>1</td></tr>
<tr><td>AS- WP91</td><td>1040-1080</td><td>760-780</td><td>1/2</td><td>1</td></tr>
<tr><td>AS- WP92</td><td>1040-1080</td><td>760-780</td><td>1/2</td><td>1</td></tr>
</table>
Stainless Steel - All grades & Duplex SS (UNS32205): - Solution Annealed: 1050-1100 Deg C
Soaking time : ½ hr per inch with minimum 15 minutes

Note: Normalising shall be done for a minimum time of 30 min while tempering to be done for a minimum time of 60min for all materials except SS & Duplex SS (UNS32205).</td></tr>
<tr><td>NDE – UT
For OD >/= 219mm or W.T >/= 6mm</td><td>UT shall be done as per - ASTM A388
In Acceptance to - ASME Sec.VIII Div.2 Cl.3.3.4. Actual measured notch depth to be specified in Test Certificate.</td></tr>
<tr><td>NDE (for all sizes)</td><td>MT- (100%) Shall be done as per ASTM E709.
No linear indications are acceptable.
For WP91 & WP92 Wet MPI shall be done.

LPI – SS & Duplex SS (UNS32205): Shall be done as per ASTM E165. No linear indications are acceptable.</td></tr>
<tr><td>Hardness</td><td>WPB, WPC, WP11, WP12, WP22 – 197 BHN max.
WP91 - 191-250 BHN – 100% to be checked
WP92 - 196-250 HBW – 100% to be checked
Duplex SS (UNS32205) – 300BHN max</td></tr>
<tr><td>Dimension</td><td>ASME B16.9 or ASME B16.5 or as per Engineering drawing indicated in Purchase order.</td></tr>
<tr><td>Bend Test (for IBR items)</td><td>Specimen: 19mm. Thickness (t) x 25.4mm width - cold bent 180 deg. over thin section without fracture, mandrel radius: CS :<=6.35 mm.
AS, SS : <=1.5 times specimen thick.</td></tr>
</table>

3.5 Welded Fittings– Ells, Tees, Reducers (Two-Half construction):

Pipe made from plate and long seam welded shall not be used as a starting material.

<table>
<tr><td>Starting material:
Plate</td><td>NDE – UT</td><td>For thickness above 10mm
SA 578, Acceptance Level – B.</td></tr>
<tr><td rowspan="6">Finished fitting</td><td>Heat Treatment

After forming</td><td>Shall be done as per SA234 and follow below table for heat treatment values.
<table>
<tr><th rowspan="2">Material</th><th colspan="2">Heat Treatment Temp,◦C</th><th colspan="2">Soaking time, hr/in</th></tr>
<tr><th>Normalizing</th><th>Tempering</th><th>Normalizing</th><th>Tempering</th></tr>
<tr><td>CS- WPBW & WPCW</td><td>870-900</td><td>-</td><td>1/2</td><td>-</td></tr>
<tr><td>AS–WP11W & WP12W</td><td>920-960</td><td>640-670</td><td>1/2</td><td>1</td></tr>
<tr><td>AS–WP22W</td><td>920-960</td><td>680-710</td><td>1/2</td><td>1</td></tr>
<tr><td>AS- WP91W</td><td>1040-1080</td><td>760-780</td><td>1/2</td><td>1</td></tr>
<tr><td>AS- WP92W</td><td>1040-1080</td><td>760-780</td><td>1/2</td><td>1</td></tr>
</table>
Stainless Steel - All grades & Duplex SS (UNS32205): - Solution Annealed: 1050-1100 Deg C
Soaking time : ½ hr per inch with minimum 15 minutes</td></tr>
<tr><td>Post Weld Heat Treatment (PWHT)</td><td>PWHT shall be done as indicated below.
<table>
<tr><th>Material</th><th>Heat Treatment Temp,◦C</th><th>Soaking time</th></tr>
<tr><td>CS- WPB-W & WPC-W
If weld thk>19mm</td><td>595-635</td><td rowspan="2">2.5min per mm of weld thk; Minimum 30minutes.</td></tr>
<tr><td>AS–WP11-W&WP12-W</td><td>650-680</td></tr>
<tr><td>AS–WP22-W</td><td>690-710</td><td rowspan="3">2.5min per mm of weld thk; Minimum 60minutes.</td></tr>
<tr><td>AS- WP91-W</td><td>760-780</td></tr>
<tr><td>AS- WP92-W</td><td>760-780</td></tr>
</table></td></tr>
<tr><td>NDE (for all sizes)</td><td>• MT (100%)- Procedure - As per ASTM E709.
No linear indications are acceptable
For WP91 & WP92 Wet MPI shall be done
• LPI – SS & Duplex SS (UNS32205) : Shall be done as per ASTM E165.
No linear indications are acceptable.</td></tr>
<tr><td>NDE – for Weld</td><td>• RT (100%)- Acceptance norm shall be UW 51 of ASME Sec VIII DIV-1.</td></tr>
<tr><td>Hardness</td><td>Base material Hardness for
WPB, WPC, WP11, WP12, WP22 – 197 BHN max.
WP91 - 191-250 BHN – 100% to be checked
WP92 - 196-250 HBW – 100% to be checked
Duplex SS (UNS32205) – 300BHN max
Weld Hardness
WP91 - 300 BHN max. – 100% to be checked
WP92 - 300 BHN max. – 100% to be checked</td></tr>
<tr><td>Dimension</td><td>ASME B16.9 or as per Engineering drawing indicated in Purchase order.</td></tr>
<tr><td>Bend Test (for IBR items)</td><td>Specimen: 19mm. Thickness (t) x 25.4mm width - cold bent 180 deg. over thin section without fracture, mandrel radius: CS :<=6.35 mm.
AS, SS : <=1.5 times specimen thick.</td></tr>
</table>

4.0 GENERAL REQUIREMENTS:

a) Carbon < or = 0.25% for WPB (all thickness) and WPC (thickness < or = 20mm)
b) Carbon < or = 0.30% for WPC (thickness > 20mm)
c) **If UT not done on the starting material, the same shall be done by the fitting manufactures before forming / fabrication.**

d) **Chemical and Mechanical Testing** – Test samples shall be tested in the Heat treatment of fitting delivered condition.
   i) Product analysis – one / heat / size.
   ii) Tension test – one / heat / heat treatment lot / size
   iii) Hardness test – 100% for Gr91 and Gr92. 10% for others.

e) **Photomicrograph test for WP91 & WP92** :- Photomicrograph test shall be carried out on one per heat, per size. 3 replicas in one fitting. 1 replica for the size Nb 80 & below. Acceptance norms - The Material shall be free from any micro fissures. Microstructure shall show tempered martensite and also to be examined for any grain growth and delta ferrite (to be maintained within 3% for Gr92 when measured as per VD TUV 1272). Photomicrograph with 500x (Min) magnification along with Photomicrograph report to be provided. The actual magnification shall be indicated.

f) In case of welded fittings, WPS, PQR & welder qualification shall be approved by BHEL, prior to start of welding.

g) Unless otherwise specified in the P.O SA 234 WP 11/12/22 fittings shall be supplied as per class1.

h) **Stainless Steel (SS) & Duplex SS (UNS32205) :** Finished fittings shall be checked for radioactive contamination and reported. Survey meter shall be used to measure at 5cm near the surface. Acceptance limits: Shall be less than 0.1 milli Rontgen (MR) per hr or 1 micro Sievert per hr.

5.0 POSITIVE MATERIAL IDENTIFICATION (PMI) FOR ALLOY STEEL (AS), STAINLESS STEEL (SS) AND DUPLEX SS (UNS32205) FITTINGS.

Each AS, SS and Duplex SS (UNS32205) fitting shall be checked for the correctness of the material during manufacturing and final inspection using X-ray fluorescence principle or spark emission spectrography.

6.0 WORKMANSHIP, FINISH AND REPAIR

All items shall have smooth, workman like finish, and to be free from scale & defects like laps, seams, folds, cracks, etc. Surface defects can be removed by mechanical means and defective areas smoothly dressed up with the adjacent surface. Minimum dimension after repair shall meet drawing / Specification. Repairs by fusion welding are prohibited.

Flatness on curved surfaces of fittings shall be limited to 6% of nominal OD.

Thickness: Outer Diameter & Transition: Variation shall be merged smooth to min 1:4 taper.

7.0 PAINTING, COLOUR CODING & MARKING

7.1 **PAINTING:** All fittings (except stainless steel and galvanized) shall be **painted** on the external surface as given below (unless otherwise specified): -

a) **Surface preparation:** Blast cleaning to SSPC SP-10 (SA 2½) with surface profile 35-50 microns.
b) **Primer coat:** One coat of 60 microns of In-Organic Ethyl Zinc Silicate primer.
c) **Finish coat:** Two coats of 20 microns each of Heat Resistance Aluminium paint to IS13183 Gr-1.
d) **Total DFT:** 100 microns minimum.
e) **Shade:** Aluminium -- for all fittings.

The internal surface shall be protected with rust preventive coating or rust inhibitor. Edge preparations for Site ends shall be protected with weldable primer.

Stainless steel and Duplex SS (UNS32205) fittings need not be painted. Stainless steel and Duplex SS (UNS32205) fittings to be surface treated (Pickling & Passivation) as per ASTM A380.

7.2 **COLOUR CODING:** All fittings shall be colour coded circumferentially at all ends as given below:

Material Specification		Colour Code
SA 234	WPB	Red
	WPC	Blue
	WP11	Green & White
	WP12	Black & Red
	WP22	Blue & Red
	WP91	Brown & Red
	WP92	Brown & Blue
SA 403	WP304	Blue & Yellow
	WP304L	Blue, Red & Yellow
	WP304H	Black, Blue & Yellow
	WP316	Black & Green
	WP316L	Blue, Brown & Yellow
	WP321	Blue & Brown
	WP347	Yellow & Black
SA815 (Duplex Stainless Steel)		Red, White & Green

7.3 **MARKING** (In English only):

7.3.1 For fittings of size above 2" (50mm) :

All the fittings shall be necessarily hard punched / etched and paint stencilled with the details: Material code, Heat number, material specification, size, maker`s emblem, Inspectors seal, Running Serial number for the P.O. quantity and Statutory authorities seal as applicable, if fittings are sent to BHEL Stores. (Letter size shall be 6mm minimum and bordered with white paint for easy identification)

7.3.2 For fittings of size 2" (50mm) & below :

a) Engraving on each fitting with minimum details like melt, branch no and Paint stencilling of all above details. Where paint stencil is not possible, permanent metal marker shall be used. (Normal white board permanent marker shall not be used).

b) Fittings of size up to 2" (50mm) shall be tied together of appropriate numbers and the above details as indicated in Para 7.3.1 shall be engraved in a separate metal/plastic tag and securely tied to it.

7.3.3 For fittings of thickness less than 6mm :

If the thickness of the fitting is less than 6 mm, punching is not permitted. The above details as indicated in Para 7.3.1 shall be engraved and paint stencilled on each fitting. Where paint stencil is not possible, permanent metal marker shall be used. (Normal white board permanent marker shall not be used).

7.3.4 In case of fittings dispatched directly to project site as **DTS**, material code shall be replaced with DU code (14-digit work order DU detail) as given by Purchase during DTS advice. All other details shall be hard punched and paint stencilled as indicated in Para 7.3.1.

Sample format for Punching & Stencilling is given below.

Vendor code & Name	:	Makers Emblem Insp. Authority Stamp
Material code / DU details	:	
Melt No.	:	
Material Specification	:	
Qty.	:	
Serial No	: (Example : 1,2,3,.....& 25)	
Weight.	:	

J.NANTHINI MGR/ QA	PRIYA BALAJI SDGM / MM	C. SARAVANAN AGM / ENGINEERING	S.JEGAN SR.MGR / QUALITY
Prepared by	Reviewed by		Approved by

8.0 PACKING AND END PROTECTION:

Machined ends of the fittings shall be well Protected using end caps and fittings shall be suitably packed in box / crate as per the Packaging procedure PC: PKG: 01 to avoid transit & other damages.

9.0 INSPECTION & CERTIFICATION (In English only):

9.1 All items are to be Inspected at the manufacturer's works by the Inspection agencies / authorities as per IBR and as indicated in the P.O. Inspection certificate in IBR Form III C & Form III-I for Dished Ends shall be submitted along with the Work Test Certificate countersigned by the above authorities and shall include the following (Three ink signed originals required).

1. Test Certificate Number & date.
2. BHEL P.O Number & Amendment Number
3. BHEL P.O. Serial Number
4. BHEL TDC Number
5. Size-wise Quantity (MTC shall contain size and spec details strictly as per PO)
6. Specification, Grade & Year of code.
7. Heat/Melt Number
8. Starting material details with traceability.
9. Steel making process
10. Ladle Analysis of Raw Material and product analysis of fitting.
11. *Supplementary Test (Product analysis, Tension test) results.
12. Tensile Test Report.
13. Painting Report as per format Doc no TDG102:003.
14. Photocopy of Marking details of one sample for one PO Serial No vetted by TPIA.
15. *Guarantee of HTP shall be given as follows:- "Fittings are capable of withstanding without failure, leakage or impairment of their serviceability a hydrostatic test pressure equal to that prescribed for the specified matching pipe of equivalent material".

*Details furnished in the Tests certificate in lieu of chart/report is acceptable.

9..2 The following reports shall be **furnished separately** along with the IBR Forms & MTC indicated in para 9.1 above.

i. NDE reports for MT, RT, UT (UT Reports in soft copy + hard copy). Actual measured UT-notch depth to be specified in Test Certificate.
ii. Positive Material identification (PMI) report
iii. Heat Treatment Chart.
iv. Hardness Test report.
v. Photomicrograph test report along with photomicrograph with minimum 500x magnifications.
vi. Dimensional report (as built drawing with dimensions)
vii. Thickness Measurement Report for Elbows & Tees as per Doc No : TDG102:001 & TDG102:002.

The above report numbers shall be indicated in the MTC for ready correlation. Vendor shall ensure correlation and traceability wrt documentation.

9.3 For CE marking items if indicated in P.O. the TCs with details specified above shall be submitted as per EN-10204 (Latest).

i. For pressure parts test certificates of type 3.1 or 3.2 is acceptable.
Type 3.1 – Suppliers shall have ISO 9001-2008/2015 (with validity as applicable) certification certified by Notified Body recognized by European Community and test certificate certified by suppliers authorized inspection representative.

Type 3.2 – Components inspected and test certificates certified by both the supplier's authorized inspection representative and Notified Body recognized by European Community.

ii. For non-pressure parts test certificates of type 2.2 is acceptable.
Type 2.2 – Suppliers test certificates certified by the supplier's authorized inspection representative with test results as required by this TDG.

10.0 AUDIT CHECKS AT BHEL :

BHEL reserves the right to carry out audit checks for Chemistry, HT condition, Mechanical test and NDT on fittings.
Supplies found defective during check at BHEL are liable for rejection.

11.0 RECORDS OF REVISION :

Rev 01 : a) Fully revised for better clarity.
b) Para 2.0 (e) added.

Rev 02 : a) Para 2.0 (c): UT acceptance norms revised from level A to B.

Rev 03 : a) Fully revised for better clarity.
b) Para 4.2, 6.0, 8.0 (11) added.
c) Para 2 (d), 4.1, 5 (d) are revised.

Rev 04 : a) Para 5.0 (g), 7.0 and 8.0 (17) are revised.

Rev 05 : a) New material specification SA 815 Duplex Stainless Steel included.
b) Para 4.1, 4.2, 5.0 (d), 7.1 & 7.2 are revised.
c) 5.0 (a), (b), (c), (e), (f), (g), 7.3.1 & 7.3.2 are modified for better clarity.

Rev 06 : a) Para 8.2 added.
b) Para 5.0(d), 5.0(g), 7.1, & 8.1 are revised.
c) Para 1.0 & 7.2 are modified.

Rev 07 : Para 8.2 - vii added.

Rev 08 : a) Title revised for better clarity
b) Para 1.0,2.0(a),5.0(c),8.4,9.1(8) & 9.2(vi) are revised.
c) From Para 3.0(f),4.2,5.0(d),(f),(g),7.2 forging spec removed
d) Para 2.0(c),(f),3.0(a),7.0 & 10.0 added
e) Para 3.0(e) deleted
f) Document no.TDG102:002 Rev.00 added.

Rev 09 : Fully revised for better clarity

Rev 10 : (a) Title and Para 1.0 revised.
(b) Requirement of Gr92 fittings included, hence TDG 120 will become obsolete.
(b) Cl 1.0 - Creep test requirement removed.
(c) Cl 7.0 - Painting, Color coding & Marking modified for better clarity.
(d) Cl 9.0 - Revised for improved documentation.
(e) Document no.TDG102:003 and TDG102:004 Rev.00 added.

*****

J. Nant C.	15/2/24	C. Saravanan	
J.NANTHINI MGR/ QA	PRIYA BALAJI SDGM / MM	C. SARAVANAN AGM / ENGINEERING	S.JEGAN SR.MGR / QUALITY
Prepared by	Reviewed by		Approved by

THICKNESS MEASUREMENT REPORT FOR ELBOW

Doc No: TDG102:001 Rev.00

Date: 03.02.2014

PO Number:

Work order/Du:

Heat no:

Size:

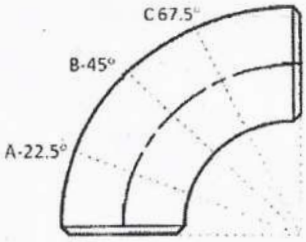

90° Elbow

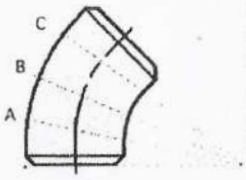

Less than 90°

Measurement (Extrodus) points

Angle	A	B	C
90	22.50°	45.00°	67.50°
60	15.00°	30.00°	45.00°
45	11.25°	22.50°	33.75°
30	NA	15.00°	NA

Description of item :
Material Spec :
Material Code :

No	Wall thickness at ends		Wall Thickness at angle			Remarks
	End 1	End 2	A	B	C	
1.						
2.						
3.						
4.						
5.						
6.						
7.						
8.						
9.						
10.						
11.						
12.						
13.						
14.						
15.						

J.NANTHINI MGR/ QA	PRIYA BALAJI SDGM / MM	C. SARAVANAN AGM / ENGINEERING	S.JEGAN SR.MGR / QUALITY
Prepared by	Reviewed by		Approved by

THICKNESS MEASUREMENT REPORT FOR TEE's

Doc No: TDG102:002 Rev.00

Date: 20.06.2015

PO Number:

Description of Material:

Size:

Material Spec.

Work order/Du:

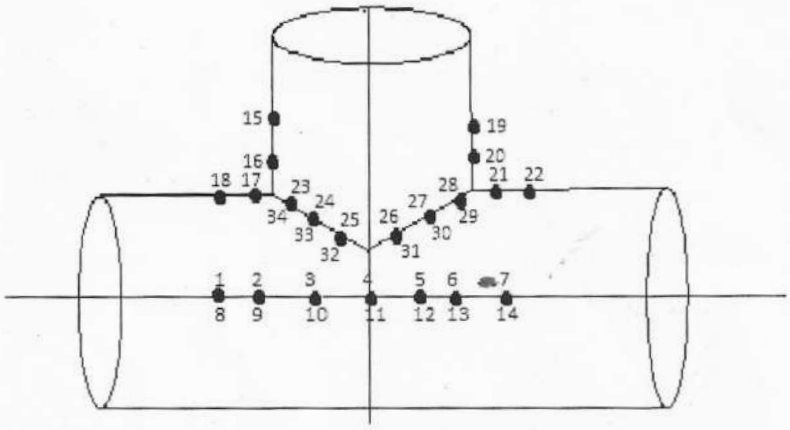

Location	Thickness (mm)	Location	Thickness (mm)	Location	Thickness (mm)
1		13		24	
2		14		25	
3		15		26	
4		16		27	
5		17		28	
6		18		29	
7		19		30	
8		20		31	
9		21		32	
10		22		33	
11		23		34	
12		24			

J.NANTHINI MGR/ QA	PRIYA BALAJI SDGM / MM	C. SARAVANAN AGM / ENGINEERING	S.JEGAN SR.MGR / QUALITY
Prepared by	Reviewed by		Approved by

PAINTING & MARKING REPORT

Doc No: TDG102:003 Rev.00
Date: 15.02.2024

Report No: **Date:**

BHEL PO. NO & Date :
TDG No :
Applicable Painting Scheme :
Surface Preparation :
Primer Coat :
Primer paint Batch no & Expiry date :
Finish Coat & Shade :
Finish paint Batch no & Expiry date :
Internal surface coating (if applicable) :

PO. Sl.No	Description	Quantity	Total DFT Required	Total DFT Measured	Remarks

(Add Annexure, if no of PO Sl.no is more)

Color Code (marked Circumferentially at all ends) :
Marking : As per TDG & PO requirements.

It is hereby confirmed that the above mentioned components/items/equipment was/were painted as per the TDG & PO requirements as referred above and found acceptable.

Verified
(Vendor QC Sign & Seal)

Reviewed
(BHEL QC Sign & Seal)

J.NANTHINI MGR/ QA	PRIYA BALAJI SDGM / MM	C. SARAVANAN AGM / ENGINEERING	S.JEGAN SR.MGR / QUALITY
Prepared by	Reviewed by		Approved by

PRE DISPATCH INSPECTION REPORT

Doc No: TDG102:004 Rev.00

Date: 15.12.2024

S NO	PO NO & PO SI NO	MATERIAL CODE / WORK ORDER NO	ITEM DESCRIPTION	QUANTITY	WEIGHT (MT)

OBSERVATIONS : (Photos also to be enclosed)

PDI DONE BY

(BHEL/BHEL AIA Sign & Seal)

J.NANTHINI MGR/ QA	15/2/24 PRIYA BALAJI SDGM / MM	C. SARAVANAN AGM / ENGINEERING	S.JEGAN SR.MGR / QUALITY
Prepared by	Reviewed by		Approved by

BHARAT HEAVY ELECTRICALS LIMITED, PIPING CENTRE, CHENNAI

List of Raw material sources for Seamless Pipes confirmimg to ASME SA 335/ASTM A335 P91 & P92

QCP : 19
Rev : 03
Date : 06.01.2020

Sl.No.	Vendor Name	Country	Grade		Size
1	PRODUCTOS TUBULARES S.A.U	Spain	P91	P92 $	MIN.ODXWT: 219.1X6.35MM MAX ODXWT: 610.0X101MM
2	SUMITOMO METALS (NSSMC)	Japan	P91	P92	MIN.ODXWT:15.9X1.90MM MAX ODXWT:949.3 X170.00MM
3	VALLOUREC TUBES	France & Germany	P91	P92	MIN.ODXWT:21.3X2.00MM MAX ODXWT:1540.0 X270.00MM
4	VALLOUREC(Changzhou) Co Ltd **RM P91:** Xingcheng Special Steel Co ltd, China, Stahlwerk Bous GmbH,Germany **RM P92:** Stahlwerk Bous GmbH,Germany **P91 & P92:** ID > 540mm and T > 120mm hollows shall be souced from Vallourec France/Germany	China	P91	P92	MIN.ODXWT:21.3X2.00MM MAX ODXWT:1540.0 X270.00MM
5	BENTELER STEEL / TUBE GmBH	Germany	P91	P92	MIN ODXWT:21.3X2.0 MM MAX ODXWT:157.3X20.0 MM
6	IBF S.P.A.	Italy	P91	P92	MIN.ODXWT:168 X 20 MM MAX ODXWT: 2500 X 250 MM
7	TUBOS REUNIDOS INDUSTRIAL S.L.U.	Spain	P91	P92	MIN.ODXWT:4.0 X0.50MM MAX ODXWT:177.8 X40.0MM
8	WYMAN-GORDON FORGINGS INC.	USA	P91	P92	MIN.ODXWT:219.0X12.50MM MAX ODXWT:1200.0X177MM
9	TENARIS GLOBAL (NKK TUBES)	Japan	P91	P92 $	MIN.ODXWT:21.3X2.40MM MAX ODXWT: 622.0X48.00MM
10	TENARIS GLOBAL (DALMINE)	Italy	P91	P92 $	MIN.ODXWT:21.3X2.40MM MAX ODXWT: 622.0X48.00MM
11	TENARIS GLOBAL (SILCO TUBES)	Romania	P91	P92 $	UPTO 159 MM OD
12	JFE (Kawasaki)	Japan	P91	P92	MIN ODXWT:88.9X4.0 MM MAX ODXWT:406.4X55.0 MM
13	RINGMILL SPA	Italy	P91 $	P92 $	MIN ODXWT:350.0X50.0 MM MAX ODXWT:3000.0X300.0 MM
14	HENGYANG STEEL TUBE GROUP INT'L	China	P91 $	P92 $	MIN.ODXWT:88.9X4.50MM MAX ODXWT:722.0X120MM
15	YANGZHOU CHENGDE STEEL PIPE CO. LTD **RM P91 & P92:** BaoSteel Special Metals, Shangai **RM P91:** Xingcheng Special Stee lCo ltd, Jiangsu	China	P91	P92	ABOVE 219.1 MM OD
16	JIANGSU CHENGDE STEEL TUBE SHARE CO **RM P91 & P92:** BaoSteel Special Metals, Shangai **RM P91:** Xingcheng Special Stee lCo ltd, Jiangsu	China	P91	P92	UPTO 219.1 MM OD
17	ZHEJIANG GROSS SEAMLESS STEEL	China	P91 $	P92 $	MIN.ODXWT:355.6 X 8.00 MM MAX ODXWT:1200.0 X 200MM
18	YANGZHOU LONTRIN STEEL	China	P91	P92	MAX OD / WT : 1016 X 150 MM
19	TECTUBI RACCORDI S.P.A.	Italy	P91 $	P92 $	P91:UPTO OD 1150 (WT 150); P92:UPTO OD 813(WT 120)& OD 813 TO 1100(WT 48)
20	HUBEI XINYEGANG STEEL CO LTD	China	P91 $	_	MAX OD / WT : 1016 X 150 MM

Supplementary Tests: S1,S2,S3,S4,S5 to be done for P92. **$: Shall NOT be used for NTPC projects.**

Rev 01: P92 sources added, Sichuan removed and other entries verfied wrt PCP91.

Rev 02: Sl No 4, 15, 16 revised inline with NTPC approval letters. **RM - Raw Material for NTPC projects**

Rev 03: Sl No 7,8,18 revised inline with NTPC approval letters. Sl No 18,19 added. SKT International removed.

J. N. 06/01/2020.

PREPARED BY:
J.NANTHINI

APPROVED BY:
K.V.RAMANI 6/1/2020

Pre – Qualification Requirement (PQR) for Manufacture & Supply of BW Fittings (SS)

Sl No	PQR description	Documents to be submitted	Bidder response (Submitted / Not submitted / NA)
1	Bidder must be a manufacturer (Fabricators / traders / distributors / dealers are not acceptable).	Product Catalogue or IBR Certificate or any other relevant documentation.	
2	Bidder must have a valid ISO certification.	Copy of ISO 9001:2015 or Quality Management System Certificate or Written Down Procedure.	
3	Bidder must have in-house facility for manufacturing of fittings.	1. List of in-house facilities for manufacture of BW Fittings. 2. Valid furnace calibration report meeting requirements as per TDG 102 Rev ~~X~~10	
4	Bidder must have in-house facility for solution annealing.	Bidder confirmation to be provided.	
5	Bidder shall have supplied formed fittings in Stainless Steel specification. Experience in a higher grade like Duplex SS, Super duplex, Hyper duplex etc., will also qualify tender requirement.	1. Copy of Purchase Order, Inspection Report / Material Test Certificates, Invoice, Lorry Waybill / Bill of Lading (in case of export supply) etc as per Annexure 1 to PQR.	
6	Bidder must have qualified Design Proof Test (Burst Test) for Elbow or Tee or Reducer as per ASME B16.9 meeting the tendered size. Bids of only those products (Elbow, Tee, Reducer) and sizes range (OD, Thickness) that qualify design proof test only will be considered.	1. Copy of Design Proof Test (Burst Test) report issued / witnessed by any Third Party Agency / End Customers. 2. Details of Deign Proof Test (Burst Test) as per Annexure 1 to PQR.	
7	Bidder shall have necessary financial capability for execution of the quoted requirements.	1. Audited copy of Balance Sheet and Profit & Loss Statement for last two years (or from date of incorporation whichever is less). 2. Proprietary and partnership firms shall submit IT returns for last two years (or from date of incorporation whichever is less).	

Bidder- Manufacturer / Mill. Details to be furnished by the bidder.

Note-

- Bidders can quote depending on their manufacturing capability and design proof test qualification. Bids will be considered only for those products (Elbow or Tee or Reducer), size range (OD & Thk) and manufacturing capability that qualify PQR.
- Only the bids fulfilling PQR will be considered for further Techno-Commercial evaluation.
- Notwithstanding anything stated above,
  - BHEL reserves the right to assess the capabilities and capacity of the bidder to perform the contract in the overall interest of BHEL.
  - BHEL reserves the right to undertake on-site assessment of the facilities at bidder works during the bid evaluation.
  - BHEL reserves the right to check the authenticity of the PQ details furnished. In any case if the submitted details are found to be falsified, such erring bidders will be dealt as per extant guidelines in vogue.

NAGARAJU VURITLA

Digitally signed by NAGARAJU VURITLA
DN: c=IN, o=BHARAT HEAVY ELECTRICALS LIMITED, ou=HIGH PRESSURE BOILER PLANT TIRUCHIRAPPALLI, 2.5.4.20=5a16fba2581d1f0f70837cb3b4f4075df95163584df087e72034cc23e51f843d, postalCode=620014, st=Tamil Nadu, serialNumber=DF15704A1C33BC68F85E2047ABAF04E3B3409579 5SED26EDD6281EE2488A58675, cn=NAGARAJU VURITLA
Date: 2024.03.09 11:30:11 +05'30'

(J.NANTHINI / MGR / Q / BHEL TRICHY)

PACKAGING INSTRUCTIONS FOR PIPING COMPONENTS
PC: PKG: 01

Revision summary

Rev No	Revision Details	Issued on
00	Fresh issue	28-05-2014

Prepared by	Reviewed & Approved by
S.ARUN KUMAR	K.VEDAPRASAD

Contents

1. Scope
2. Packaging
3. Criteria for Selection of Packaging
4. Types of packaging
5. Sling protections
6. Marking and Labelling
7. Packing list
8. General Instructions for packaging
9. Reference drawings
10. Cautionary symbols
11. Packing reference table
12. Check list

1. SCOPE

This procedure elicits the general requirements to be complied with for packaging of piping components. The packaging is intended to preserve and protect the contents.

The handling, storage, cleaning, packaging, and preservation of items shall be controlled to prevent damage or loss and to minimize deterioration.

2. PACKAGING

This procedure contains requirements for packaging of items for protection against corrosion, contamination, physical damage, or any effect that would lower the quality or cause the components to deteriorate during the time they are shipped and stored at sites.

Items shall be inspected for cleanliness immediately before packaging. Dirt, oil, residue, metal chips or other forms of contamination shall be removed.

Adequate protection shall be provided against mechanical damage and atmospheric corrosion in transit and, for equipment suitable for outside storage, for prolonged storage at the site prior to installation.

Water proof barrier material – high density polythene shall be used as a resistant to grease and water; it shall protect items from airborne and windblown soils.

Desiccants like silica gel to be used inside pipe components. Silica gel shall conform to IS 3401.The gel is to be packed in sachets placed at different positions inside the components for absorbing moisture. The quantity of silica gel shall be adequate for storage period of one year.

Components to be placed in such a way that metal to metal contact is avoided.

For mechanical components, (1) all openings shall be covered or plugged with substantial (1/2 inch minimum thick) one piece plywood or metal closures, securely fastened and suitable for prolonged exposure prior to final installation; (2) all tapped openings in equipment shall be plugged with plastic plugs to protect internal threads; and (3) all welding end connections shall be provided with adequate weld bevel protectors to protect from corrosion and physical damage.

Austenitic stainless steel and nickel-based alloy materials shall be handled in such a manner that they are not in direct contact with carbon steel materials or with materials containing halogen, sulphur, zinc and lead.

Each components/item of stainless steel materials should be wrapped with high density polythene.

All equipment shall be packed, securely anchored (skid mounted when required) and weather protected for the shipment method adopted.

Temporary bracing or supports, marked and tagged for removal after equipment installation, shall be provided to prevent damage during shipment and shall be painted bright, fluorescent yellow.

3. Criteria for Selection of Packaging:

Packages are to be made according to categories listed in Table-6 (see page – 24), depending on the type of materials and size.

4. TYPES OF PACKAGING:

4.1 CRATES

- These are to be made of seasoned wood and are intended for packaging heavy materials Viz., straight pipes and pipes with attachments.
- The crates are to be lined with hi-density polythene, to prevent entry of moisture.
- The dimensions of the crates are to be restricted to 20 x5x5 feet.
- Pipes up to OD 350mm are to be crated.
- Pipes are to be stacked inside the crate so that the weight of the pipe does not rest on branch stubs or carrier plates.
- Contents of the crate should not come in contact with each other or with the crating, and should be adequately cushioned to preserve the painting.
- The gross weight of the crate should not exceed 2 Tons.
- For further instructions refer ASTM D6039 Standard Specification for Open and Covered wood Crates.

WOODEN CRATE

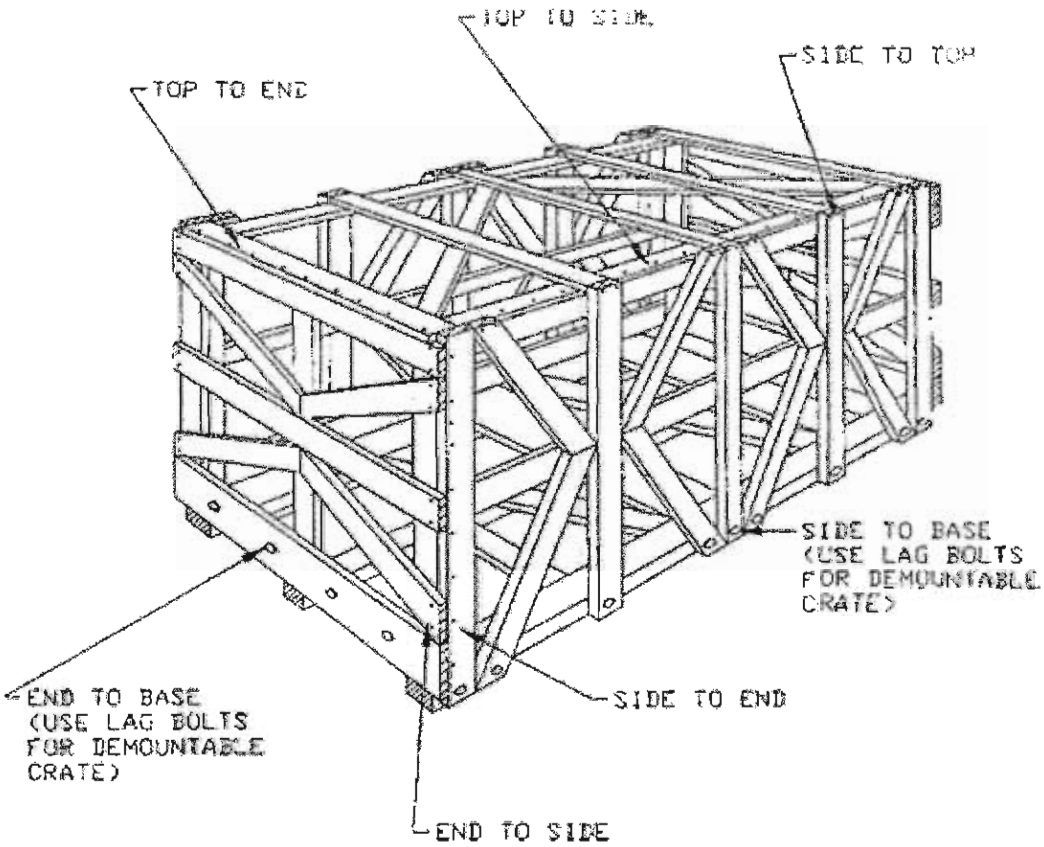

Max Net Load (KGS)	Length (mm)	Width (mm)	Height (mm)
2000	6096	1524	1524

All the dimensions shown in the above table are maximum inside dimensions.

4.3 SADDLES

- Saddles are defined as profiled supports made of wood, and are used to cradle and support Tanks, pipe bends and pressure vessels.
- Ensure that the end chamfering of the bends are duly protected for the transit.
- Tanks are to be completely drained and dried.
- Adequate amount of the specified desiccant is to be placed inside the tank/ vessel.
- Ensure that all openings are covered and /or plugged.

4.4 CASES

- Other components such as fittings and Mitres are to be packed inside wooden cases.
- The insides of the cases are to be lined with hi-density polythene.
- Air vents to be provided in the cases for ventilation.
- Components to be placed in such a way that metal to metal contact is avoided.
- Small components like Fasteners, gaskets are to be packed in high density polythene covers and placed inside the wooden cases.
- Holes to be provided in the case floor to act as drains.

4.5 BUNDLES

- Bundles are transportable units where a large number of straight pipes of the same diameter and even lengths are arranged securely and are fit to be lifted by cranes and also stacked.
- Pipe ends should be covered fully with plastic end caps.
- Pipes can be bundled only when they can bear the stack compression load without additional support.
- Clamps made of wood or steel clamps with wooden inserts are to be used.
- Clamps must be locked firmly so that the pipes cannot slide out of bundle.
- Bundle must be held together by at least three sets of clamps as indicated in the diagram.

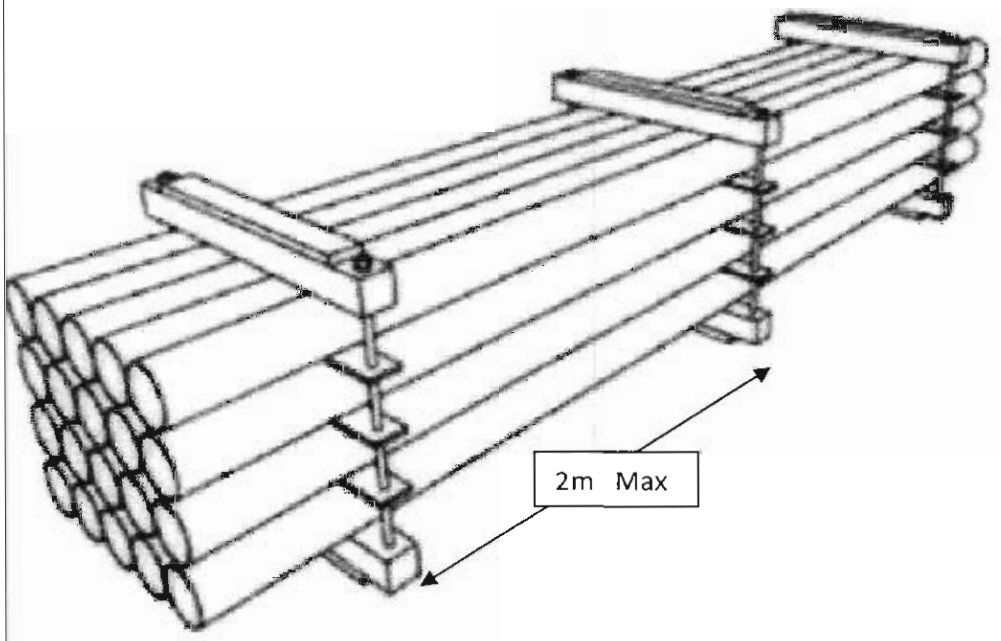
2m Max

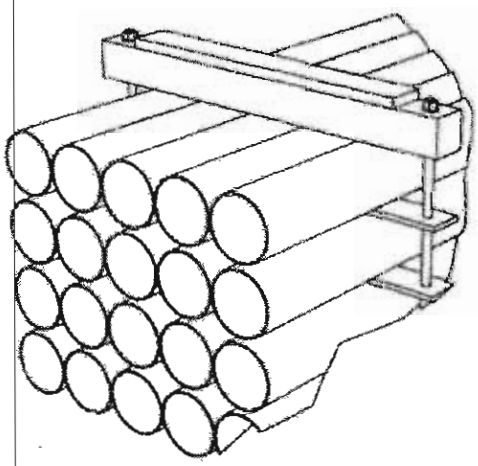

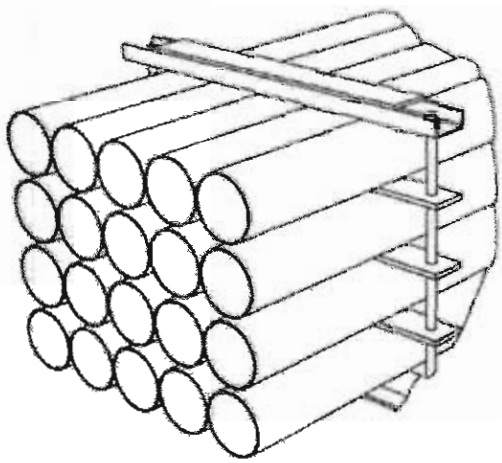

5. SLING PROTECTIONS

The lifting points of the case or crate or bundle must be equipped with sling protections suitable to the respective package gross weight.

6. MARKING AND LABELLING

Components and their containers shall be identified by marking. Shipping marks shall be on all sides of package. The shipping marks shall be at least 3 inches high where space permits. Markings are to be in black paint or ink depending on shade of the package surface.

Cautionary symbols to be stencilled in red waterproof paint or ink.

7. PACKING LIST

One complete packing list inside a watertight envelope must be affixed outside of each package and be covered by sheet metal. One more copy of the packing slip wrapped in polyethylene bag is to be kept inside the box at the pertinent place.

8. General Instructions for packaging

- The quantity of Slides / Runners is selected depending upon the weight and over-all dimension of the Load, to be carried. Table-1 and 2 details out the number of Slides, length and cross sections of the Slides to be provided with their carrying capacity.
- The construction of bottom frame is as shown in the Figure-2.
- The construction of the top frame is, as shown in the figure -3.
- Thickness of the boards, used for sheathing for the top, sides and end panels, shall be 25 mm.
- The top of the Box consist of Beam supported on top traverse bar and sheathing, as shown in the figure- 3.
- The dimension of items 1, 2 f figure - 3 shall be as table - 3.
- Diagonal braces shall be used in packing cases with height, exceeding 600 mm as shown in the figure- 4.
- The angle between the lower (or) upper horizontal supports and diagonal braces, shall be in the range of 20° to 60° and if possible, this angle preferably be kept at 45°.
- If the height of the box exceeds more than 1400 mm the diagonal braces, shall cross each other and when this dimension exceeds 1800mm additional horizontal supports shall be provided as shown in figure-5 and figure- 6.
- Size of upper and lower horizontal supports and vertical supports, shall be as per Table 4 refer figure 7, 8, 9 & 10 for the arrangement.
- The cross section of end traverses bar (item -1) and thickness of bottom boards (item-2), shall be used as per table - 5.
- All boxes measuring more than 600 mm height shall be constructed by assembling end, side and top shook's on a bottom, forming a complete enclosed Box (refer figure-11).
- Angle iron cleats shall be used for strengthening the joints, as indicated in figure -12.
- Boxes will be strengthened by steel bands to withstand transit damages.

9. Reference drawings

1. SLIDE
2. LONGITUDINAL UNDER SLIDE BOARD.
3. BOTTOM BOARD
4. CARRIER TRAVERSE BAR
5. INTERMEDIATE VERTICAL SUPPO
6. HORIZONTAL BRACING
7. DRAINAGE HOLES
8. BATTEN
9. SLING PLATE
10. NUT BOLT WASHER
11. END TRAVERSE BAR
12. WATER PROOF LINING OF BITUMANISED PAPER
13. VERTICAL SUPPORTS
14. END SHETING BOARD
15. SIDE SHEATING BOARD
16. TOP SHEATING BOARD
17. LONGITUDINAL SUPPORT
18. TOP HORIZONTAL BEAN
19. TOP SHEATING BOARD
20. TOP CORNER STRIPS (FOR STRENGTHENING)
21. OUT SIDE DOCUMENTS CONTAINER.

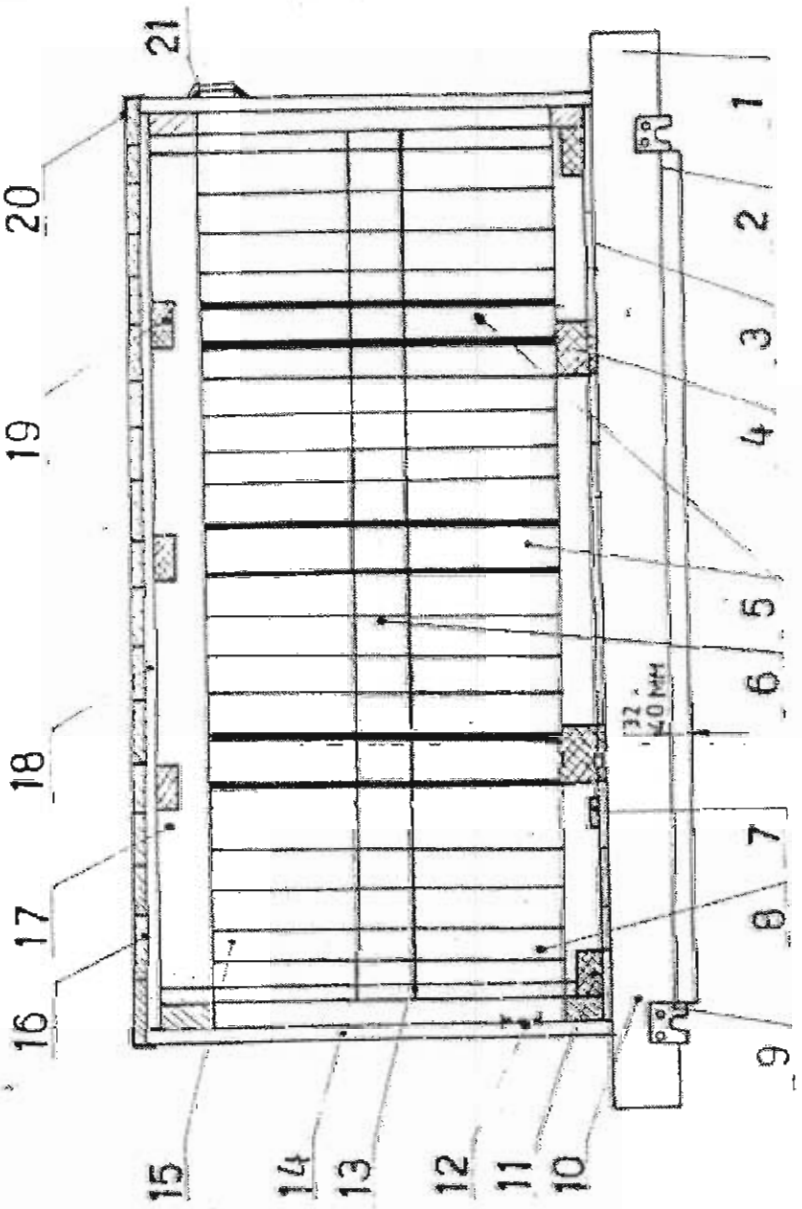

FIG. 1

NOMENCLATURE OF PARTS OF PACKING

BOTTOM FRAME ARRANGEMENTS FOR TYPES

633, 654, 966, 1296, 1122, 1144, 1399, 1577

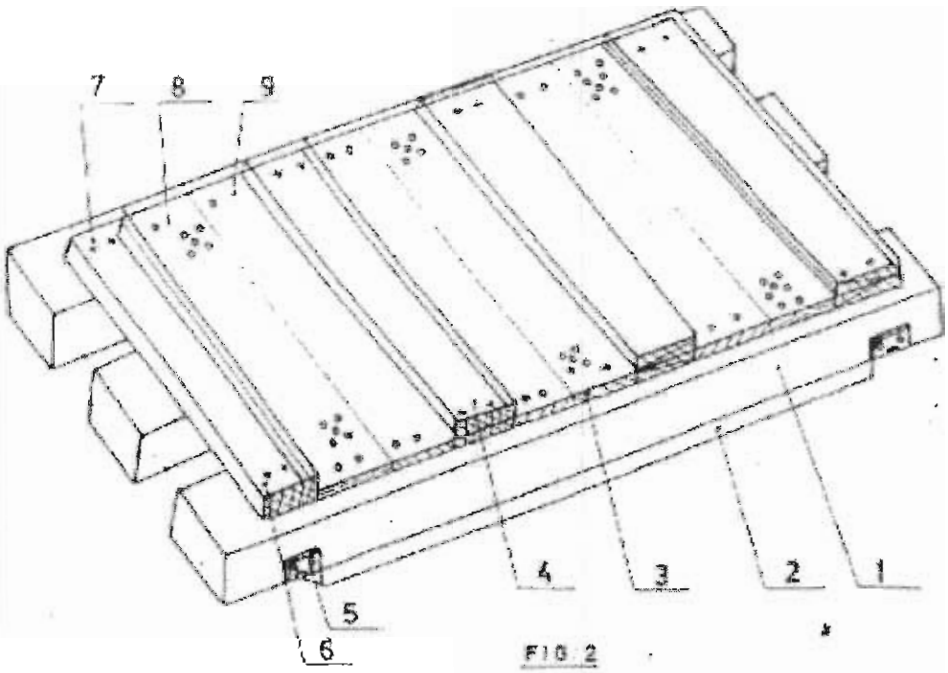

FIG 2

1. SLIDE
2. UNDER SLIDE BOARD
3. BOTTOM BOARD
4. CARRIER TAVERSE BAR
5. SLING PLATE
6. TRAVERSE BAR
7. BOLT, NUT & WASHER
8. DRAINAGE HOLES
9. NAILS

TOP FRAME ARRANGEMENT FOR TYPES

633, 654, 966, 1296, 1122, 1144, 1399 & 1577

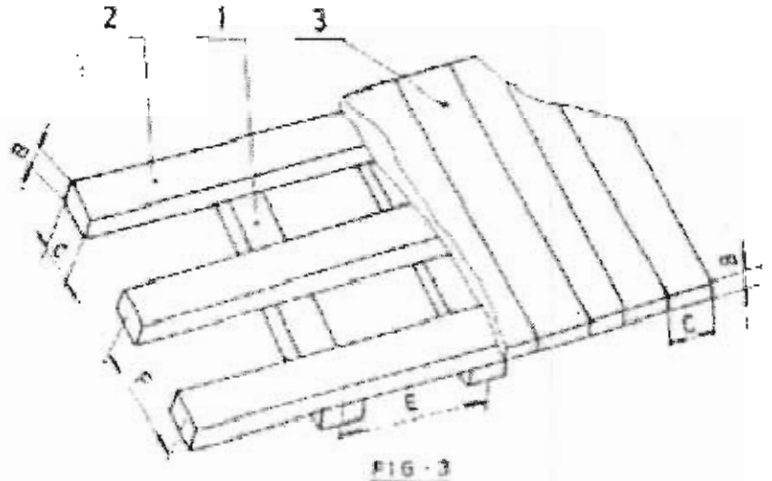

FIG-3

1 - Traverse Bars

2 - Horizontal Sears

3 - Top Board

PROVISION OF DIAGONAL BRACING ARRANGEMENT

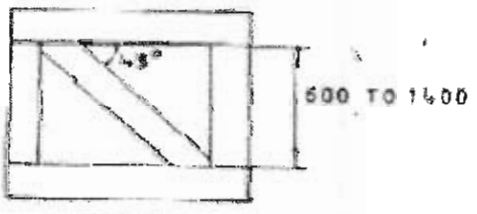

FIG-4

ARRANGEMENT OF DIAGONAL BRACING & HORIZONTAL SUPPORT

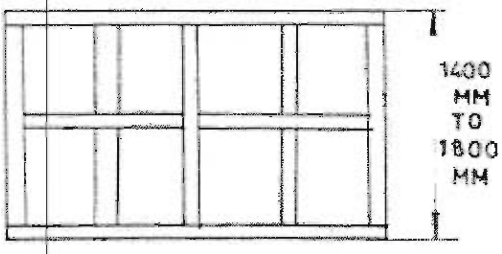

FIG. 5

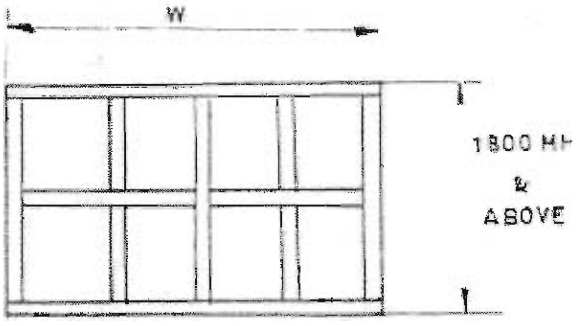

FIG. 6

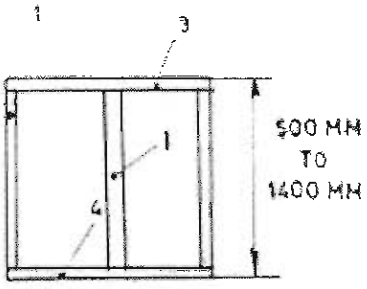

FIG : 7

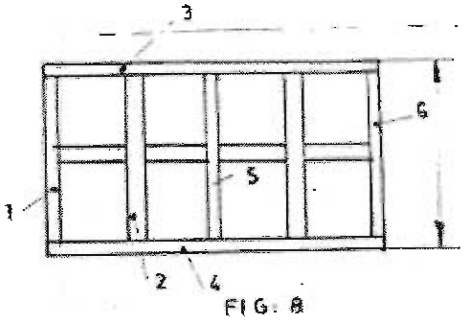

FIG. 8

1. VERTICAL SUPPORT

3. UPPER HORIZONTAL SUPPORT

4. LOWER HORIZONTAL SUPPORT

1,2,5, 6 - VERTICAL SUPPORT

3 - UPPER HORIZONTAL SUPPORT

4 - LOWER HORIZONTAL SUPPORT

ARRANGEMENT OF DIAGONAL BRACING AND HORIZONTAL SUPPORT

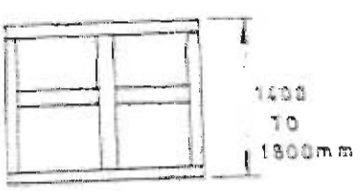

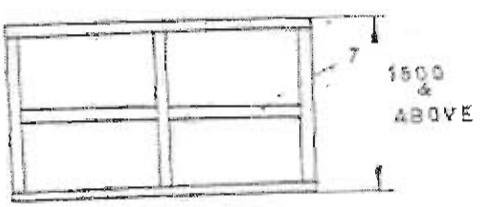

7 – MIDDLE HORIZONTAL SUPPORT

ARRANGEMENT OF PACKING CASE

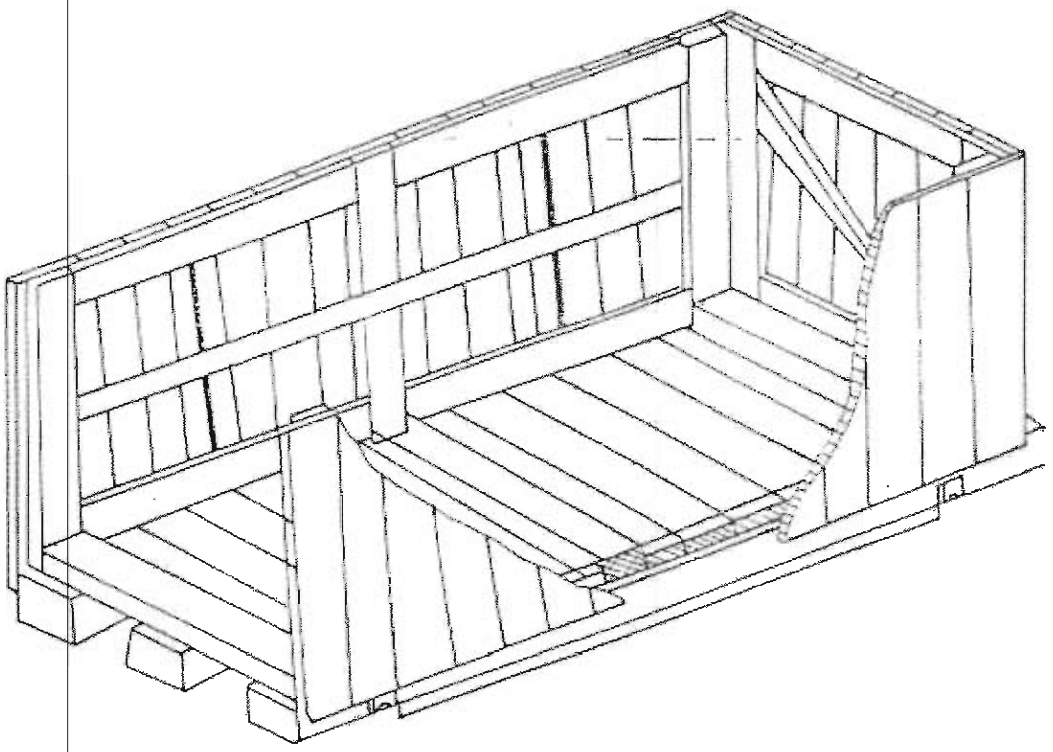

FIG : 11

ARRANGEMENT OF ANGLE IRON CLEATS

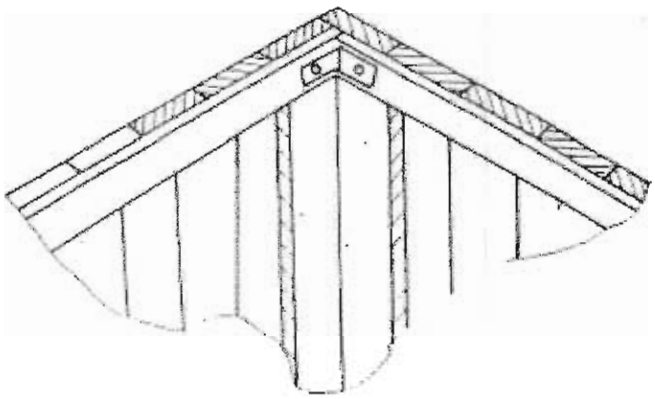

FIG : 12

ARRANGEMENT OF C-CLAMPS AROUND CASES

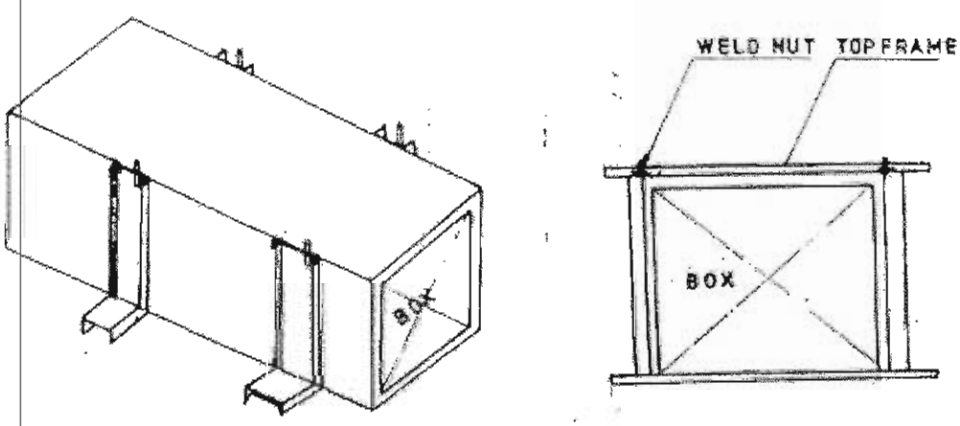

FIG:13

ARRANGEMENT OF SLING - PLATE ON CASES

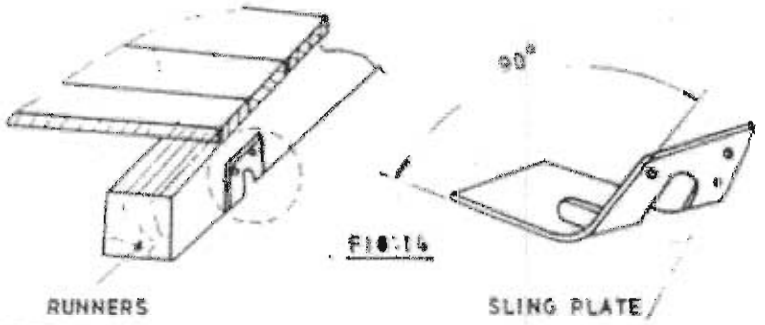

FIG:14

ARRANGEMENT OF SMALL CASES

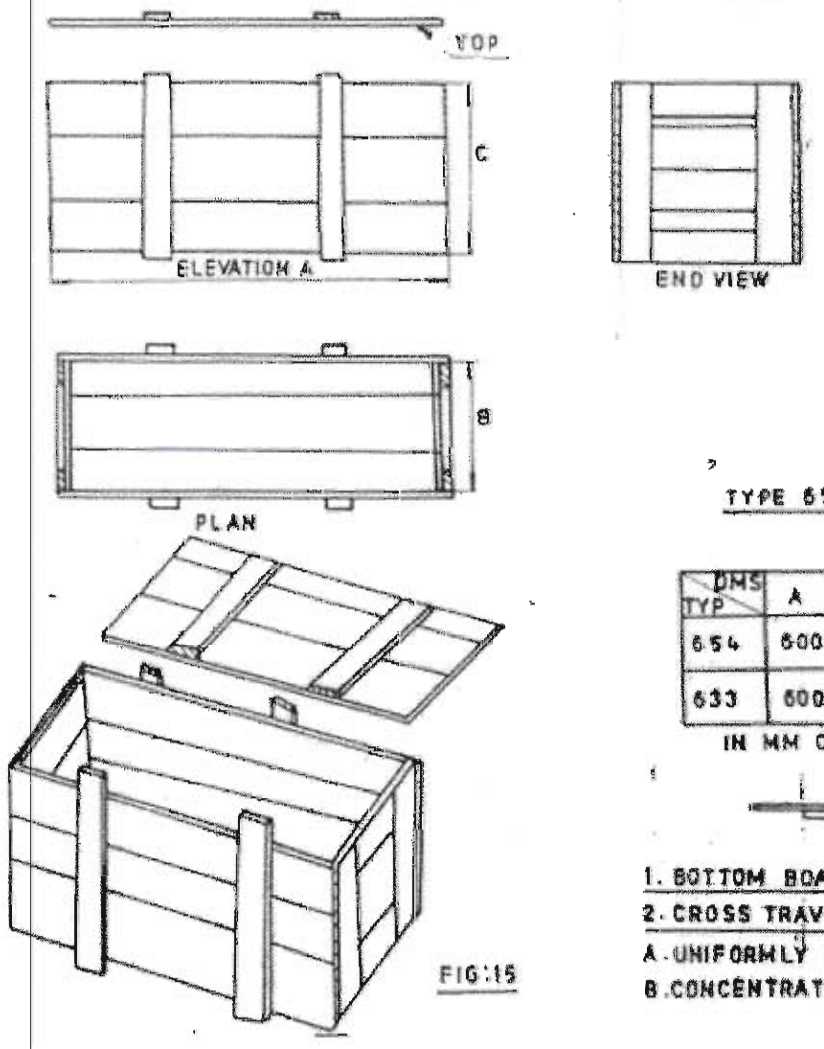

FIG:15

TYPE 654, 633

DMS / TYP	A	B	C
654	600	500	400
633	600	300	300

IN MM ONLY

1. BOTTOM BOARD
2. CROSS TRAVERS BOARD

A - UNIFORMLY DISTRIPUTED
B - CONCENTRATED LOAD

The sizes of boxes given below are indicative. Actual sizes may vary according to size and positioning of component inside.

ANNEXURE – A

WOODEN BOXES

TYPE	L X B X H (MM)	CARRYING CAPATCITY IN KGS
633	600x300x300	200
654	600x500x400	500
966	900x600x600	1000
1296	1200x900x600	2000
1122	100x200x200	300
1144	110x400x400	300
1399	1300x900x900	2500
1577	1500 X 700 X 700	1500

TABLE - 1

No. of slides	Length of slides	Weight in (kgs)	Types of loading
2	600 - 1800 mm	0 - 1000	Two slides for central loading near the ends or uniformly distributes load.
3	1801 - 2500 mm	1001 – 5000	Three slides with load concentrates near the end or uniformly distributed load.

TABLE - 2

LOAD	Length of slides						
	600	800	1000	1200	1300	1500	2000
	CROSS SECTION B x C				b c		
500	30 x 100	30 x 100	30 x 100	30 x 100	30 x 100	30 x 100	30 x 100
800	30 x 100	30 x 100	100 x 100	100 x 100	100 x 100	100 x 100	100 x 100
1000	30 x 100	100 x 100	100 x 100	100 x 100	100 x 100	100 x 100	100 x 100
1500	100 x 100	100 x 100	100 x 100	100 x 100	100 x 100	100 x 100	100 x 100
2000	100 x 100	100 x 100	100 x 100	100 x 100	100 x 100	100 x 100	100 x 100
2500	100 x 100	100 x 100	100 x 100	100 x 100	100 x 100	120 x 150	120 x 150
3000	100 x 100	120 x 150	120 x 150	120 x 150	120 x 150		

TABLE – 3

Distance between top horizontal scans dim 'f'	Distance between the axis of the traverse bar dimension 'E' in fig -3				
	500	600	700	800	900
	Size b x c				
700 – 1000 mm	30 x 100	30 x 100	30 x 100	30 x 100	30 x 100

TABLE-4

End and side panels	Width of the panels	Distance Between Longitudinal Support DIM 'D'						
		600	800	1000	1200	1400	1600	1800
		Cross section (b x c) Item 1 to 7						
Fig - 7	600 to 1200	30 x 100	30 x 100	30 x 100	30 x 130	30 x 130	30 x 130	30 x 130
Fig - 8	1201 to 1600	30 x 130	30 x 130	30 x 130	30 x I30	30 x 130	30 x 130	30 x 130
Fig - 9	1601 to 2000	30 x 130	30 x 130	30 x 130	30 x 130	30 x 130	30 x 130	30 x 130
Fig - 10	2001 to 3000	30 x 130	30 x 130	30 x 130	30 x 130	30 x 130	30 x 130	40 x 150
	3001 to 4000	30 x 130	30 x 130	40 x 150	40 x 150	40 x 150	40 x 150	40 x 150

TABLE-5

BOTTOM TRAVERSE:

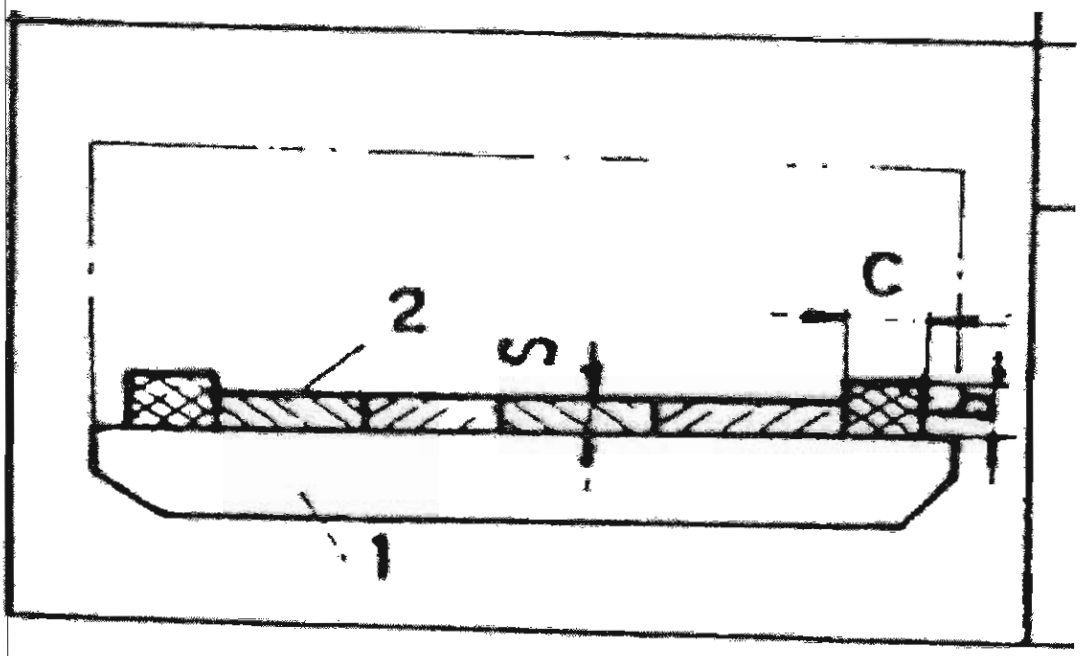

Cross section of end traverse bar item 1 fig. X and thickness of bottom board (item – 2)			
Load in kg	Width of the box	Cross section	S
Up to 3000	Above 1000 mm	100 x 100	25

10. Cautionary symbols

FRAGILE, HANDLE WITH CARE

PROTECT FROM HEAT AND RADIOACTIVE SOURCES

USE NO HOOKS

NOTE. The design of heavy goods packages cannot always resist top lifting by grabhooks.

KEEP DRY

NOTE. Not all cases have waterproof internal liners; plywood used in the construction may not have a waterproof glueline.

THIS WAY UP

NOTE. Certain lengths of small cases make it difficult to distinguish top from bottom.

CENTRE OF GRAVITY

NOTE. This should be stencilled as a minimum on the two longest case sides (this information will normally be supplied by the manufacturer of the item(s) packed).

KEEP AWAY FROM HEAT

STACKING LIMITATION

NOTE. The maximum load in kilograms should be marked above the arrow.

International 'sling here' symbol

11. Packing Reference Table

TABLE-6

No	Packing Method -> / Description	Wooden Crates	Bundles	Saddle supports	HD Polythene Sheet Wrapping	Wooden boxes (Cases)	Spider	Remarks
1	Straight Pipes	✓	✓					Crates for random length
2	Pipes with attachments	✓						
3	Pipes with Fittings	✓						
4	Tanks			✓				
5	Mitre bends			✓		✓		Saddle or cases to be used
6	Fasteners					✓		
7	Hanger components					✓		
8	Clamps					✓		
9	Fittings >nb200/ Flanges					✓		Fittings <200 shall be packed in boxes
10	Plates(Cut to size)					✓		
11	SS Pipes		✓		✓			Wrap SS pipes before bundling
12	SS fittings / Flanges	✓				✓		Fittings <200 shall be packed in boxes
15	SS Fasteners					✓		
16	CW piping(>900mm)						✓	To maintain circularity of pipes
17	CW fittings(>900mm)						✓	
18	CW fittings(<900mm)							
19	Structurals(<200mm)		✓					

12. CHECK LIST

S No	VENDOR TO PROVIDE DETAILS	
1	On despatch of components/items , vendor has to provide the following information for each package of despatched items: 1. Contents of package (Packing list) 2. Corrosion Prevention: Rust-preventive coating /protective painting/Silica gel/ other corrosion inhibitors (please mention) 3. Lifting Instructions: Crane using slings/Fork lift/any other means (please mention) 4. Dimensions (LxBxH) mm: 5. Gross Weight (Kgs): 6. Net Weight (kgs):	
S No	**VENDOR TO CONFIRM**	
1	Where ever items are despatched as a bundle, they should be clamped together with bolted timber block clamps or bolted steel section clamps with timber block inserts. Adequate number of clamps should be provided along the length of the bundle with sufficient projection of the clamps beyond the width and height of the bundle.	
2	Only such materials which can withstand corrosion and environmental conditions are allowed to be packed in wooden crates or bundles.	
3	In case of wooden packing, planks of 20-25 mm thick and 100-150mm wide needs to be suitably placed at close intervals for giving rigidity to packing appropriately.	
4	Wood used for packing should be seasoned & shall be free of termites.	
5	Damages, if any, resulting due to improper/inadequate packing will be to vendors account. It will be the responsibility of the vendor to identify suitable and adequate packing for his supplies to protect it from damage and/or deterioration during storage, stacking, transport and handling.	
6	All packing should be suitable for loading/unloading by cranes/forklifts & suitable for transport by road. Suitable marking should be made on the packing indicating the lifting positions.	

ANNEXURE-1

Check List

Note: - Suppliers are required to fill in the following details in their Letterhead and no column should be left blank.

A	**Name and Address of the Supplier**			
B	**GSTN No. the Supplier (Place of Execution of Contract / Purchase Order)**			
C	**Details of Contact person for this Tender (Supplier)**			
D	**EMD Details**	***Not applicable***		
E	**Description**		**Applicability (By BHEL)**	**Enclosed by Bidder**
i.	Whether **Pre - Qualification Criteria** is understood and provided proper supporting documents		Applicable / ~~Not Applicable~~	Yes / No
ii.	Whether all pages of the Tender documents including annexures, appendices etc are read and understood		Applicable / ~~Not Applicable~~	Yes / No
iii.	Audited Balance Sheet and profit & Loss Account for the last three years		Applicable / ~~Not Applicable~~	Yes / No
iv.	Copy of PAN Card & GST registration		Applicable / ~~Not Applicable~~	Yes / No
v.	Submission of **MSE Udyam certificate** as specified in Tender		Applicable / ~~Not Applicable~~	Yes / No
vi.	**Offer forwarding letter** / tender submission letter as per Annexure 2		~~Applicable /~~ Not Applicable	Yes / No
vii.	Submission of **Certificate of No Deviation** as per Annexure 3		Applicable / ~~Not Applicable~~	Yes / No
viii.	Declaration regarding **Insolvency / Liquidation / Bankruptcy Proceedings** as per Annexure 4		Applicable / ~~Not Applicable~~	Yes / No
ix.	Declaration by **Authorized Signatory** as per Annexure 5		~~Applicable~~ / Not Applicable	Yes / No

x.	Declaration by **Authorized Signatory** regarding Authenticity of submitted documents Annexure 6	Applicable / ~~Not Applicable~~	Yes / No
xi.	Submission of **Non-Disclosure Certificate** as per Annexure 7	Applicable / ~~Not Applicable~~	Yes / No
xii.	Submission of **Integrity Pact** as specified in Tender as per Annexure 8	~~Applicable~~ / Not Applicable	Yes / No
xiii.	Declaration **confirming knowledge about Site Conditions** as per Annexure 9	~~Applicable~~ / Not Applicable	Yes / No
xiv.	Declaration reg. **Related Firms & their areas of Activities** as per Annexure 10	Applicable / ~~Not Applicable~~	Yes / No
xv.	Declaration for **relation in BHEL** as per Annexure 11	Applicable / ~~Not Applicable~~	Yes / No
xvi.	Declaration reg. **minimum local content** in line with revised public procurement as per Annexure 12	Applicable / ~~Not Applicable~~	Yes / No
xvii.	Declaration regarding **compliance to Restrictions under Rule 144 (xi) of GFR 2017** as per Annexure 13	Applicable / ~~Not Applicable~~	Yes / No
xviii.	**Bank Account Details** for E-Payment as per Annexure 14	~~Applicable /~~ Not Applicable	Yes / No
xix.	**Power of Attorney** for submission of tender as per Annexure 15	~~Applicable /~~ Not Applicable	Yes / No
xx.	**Proforma of Bank Guarantee for Earnest Money** as per Annexure 16	~~Applicable~~ / Not Applicable	Yes / No
Xxi.	**Treatment of cases regarding conflict of interest** as per Annexure – 20	Applicable / ~~Not Applicable~~	Yes / No

Note: Strike off 'Yes' or 'No', as applicable. Tender not accompanied by the prescribed **above applicable documents** are liable to be summarily rejected.

Date:

Sign. of the Authorised Signatory
(With Name, Designation and Company seal)

ANNEXURE- 3

CERTIFICATE OF NO DEVIATION

(To be Typed & submitted in the Letter Head of the Company/Firm of Bidder)

To,
BHEL HPBP Tiruchirappalli,
Tiruchirappalli, Tamil Nadu 620 014.

Dear Sir,

Subject: **No Deviation Certificate**

Ref: 1) Enquiry No ……...
2) All other pertinent issues till date

We hereby confirm that we have not changed/ modified/materially altered any of the tender documents as downloaded from the website/ issued by BHEL and in case of such observance at any stage, it shall be treated as null and void.

We also hereby confirm that we have neither set any Terms and Conditions and nor have we taken any deviation from the Tender conditions together with other references applicable for the above referred enquiry.

We further confirm our unqualified acceptance to all Terms and Conditions, unqualified compliance to Tender Conditions.

We confirm to have submitted offer in accordance with tender instructions and as per aforesaid references.

Thanking you,

Yours faithfully,

(Signature, date & seal of authorized representative of the bidder)

Date:
Place:

ANNEXURE- 4

UNDERTAKING

(To be typed and submitted in the Letter Head of the Company/Firm of Bidder)

To,

BHEL HPBP Tiruchirappalli,
Tiruchirappalli, Tamil Nadu 620 014.

Dear Sir/Madam,

Sub: DECLARATION REGARDING INSOLVENCY/ LIQUIDATION/ BANKRUPTCY PROCEEDINGS

Ref: Enquiry No: ……...

I/We,
_____declare that, I/We am/are not admitted under insolvency resolution process or liquidation under Insolvency and Bankruptcy Code, 2016, as amended from time to time or under any other law as on date, by NCLT or any adjudicating authority/authorities.

Sign. of the AUTHORISED SIGNATORY
(With Name, Designation and Company seal)

Place:
Date:

ANNEXURE- 6

Declaration by Authorised Signatory of Bidder

(To be typed and submitted in the Letter Head of the Company/Firm of Bidder)

To,

BHEL HPBP Tiruchirappalli,
Tiruchirappalli, Tamil Nadu 620 014.

Dear Sir,

Sub : Declaration by Authorised Signatory regarding Authenticity of submitted documents.

Ref : 1) Enquiry No & Date: ……
2) All other pertinent issues till date

I/We, hereby certify that all the documents submitted by us in support of possession of "Qualifying Requirement" are true copies of the original and are fully compliant required for qualifying / applying in the bid and shall produce the original of same as and when required by Bharat Heavy Electricals Limited.

I / We hereby further confirm that no tampering is done with documents submitted in support of our qualification as bidder. I / We understand that at any stage (during bidding process or while executing the awarded contract) if it is found that fake / false / forged bid qualifying / supporting documents / certificates were submitted, it would lead to summarily rejection of our bid / termination of contract. BHEL shall be at liberty to initiate other appropriate actions as per the terms of the Bid / Contract and other extant policies of Bharat Heavy Electricals Limited.

Yours faithfully,

(Signature, Date & Seal of Authorized
Signatory of the Bidder)

Place:
Date:

ANNEXURE- 7

NON-DISCLOSURE CERTIFICATE

(To be Typed & submitted in the Letter Head of the Company/Firm of Bidder)

I/We understand that BHEL Trichy is committed to Information Security Management System as per their Information Security Policy.

Hence, I/We _____M/s _____,
who are submitting offer for supplying goods to BHEL Trichy against Enquiry No _____
Hereby undertake to comply with the following in line with Information Security Policy of BHEL Trichy

- To maintain confidentiality of documents & information which shall be used during the execution of the Contract.

- The documents & information shall not be revealed to or shared with third party which shall not be in the business interest of BHEL Trichy

(Signature, date & seal of Authorized
Signatory of the bidder)

Date:

ANNEXURE- 10

DECLARATION

(To be Typed & submitted in the Letter Head of the Company/Firm of Bidder)

To,

BHEL HPBP Tiruchirappalli,
Tiruchirappalli, Tamil Nadu 620 014.

Dear Sir/ Madam,

Sub: **Details of related firms and their area of activities**

Please find below details of firms owned by our family members that are doing business/ registered for same item with BHEL, _____ (NA, if not applicable)

1	Material Category/ Work Description	
	Name of Firm	
	Address of Firm	
	Nature of Business	
	Name of Family Member	
	Relationship	
2	Material Category/ Work Description	
	Name of Firm	
	Address of Firm	
	Nature of Business	
	Name of Family Member	
	Relationship	

Note: I certify that the above information is true and I agree for penal action from BHEL in case any of the above information furnished is found to be false.

Regards,

(_____)

From: M/s _____

Supplier Code: _____

Address: _____

_____

ANNEXURE-11

DECLARATION FOR RELATION IN BHEL

(To be typed and submitted in the Letter Head of the Company/Firm of Bidder failing which the offer of Bidder is liable to be summarily rejected)

To,

BHEL HPBP Tiruchirappalli,
Tiruchirappalli, Tamil Nadu 620 014.

Dear Sir,

Sub: Declaration for relation in BHEL
Ref: 1) Enquiry No _____

I/We hereby submit the following information pertaining to relation/relatives of Proprieter/Partner(s)/ Director(s) employed in BHEL

Tick (✓) any one as applicable

1. The Proprieter, Partner(s), Director(s) of our Company/Firm DO NOT have any relation or relatives employed in BHEL

OR

2. The Proprieter, Partner(s), or Director(s) of our Company/Firm HAVE relation/relatives employed in BHEL and their particulars are as below:
   i.
   ii.

(Signature, Date & Seal of Authorized Signatory of the Bidder)

Note:

1. Attach separate sheet, if necessary.
2. If BHEL Management comes to know at a later date that the information furnished by the Bidder is false, BHEL reserves the right to take suitable against the Bidder/Contractor.

ANNEXURE- 12

DECLARATION REGARDING MINIMUM LOCAL CONTENT IN LINE WITH REVISED PUBLIC PROCUREMENT (PREFERENCE TO MAKE IN INDIA), ORDER 2017 DATED 04TH JUNE, 2020 AND SUBSEQUENT ORDER(S)

(To be typed and submitted in the Letter Head of the Entity/Firm providing certificate as applicable)

To,

BHEL HPBP Tiruchirappalli,
Tiruchirappalli, Tamil Nadu 620 014.

Dear Sir,

Sub: Declaration reg. minimum local content in line with Public Procurement (Preference to Make in India), Order 2017-Revision, dated 04th June, 2020 and subsequent order(s).

Ref: 1) Enquiry No: _____
2) All other pertinent issues till date

We hereby certify that the items offered by _____ (specify the name of the organization here) has a local content of _____ % and this meets the local content requirement for Class I local Supplier / Class II local supplier ** as defined in Public Procurement (Preference to Make in India), Order 2017-Revision dated 04.06.2020 issued by DPIIT and subsequent order(s).

The details of the location(s) at which the local value addition is made are as follows:

1. _____ 2. _____

3. _____ 4. _____

Thanking you,
Yours faithfully,

(Signature, Date & Seal of Authorized Signatory of the Bidder)

** - Strike out whichever is not applicable.

Note:

1. Bidders to note that above format, duly filled & signed by authorized signatory, shall be submitted along with the techno-commercial offer.
2. In case the bidders quoted value is in excess of Rs 10 Crores, the authorized signatory for this declaration shall necessarily be the statutory auditor or cost auditor of the company (in the case of companies) or a practising cost accountant or practicing chartered accountant (in respect of suppliers other than companies).
3. In the event of false declaration, actions as per the above order and as per BHEL Guidelines shall be initiated against the bidder.

ANNEXURE- 13

DECLARATION REGARDING COMPLIANCE TO RESTRICTIONS UNDER RULE 144 (xi) OF GFR 2017

(To be typed and submitted in the Letter Head of the Entity/ Firm providing certificate as applicable)

To,

BHEL HPBP Tiruchirappalli,
Tiruchirappalli, Tamil Nadu 620 014.

Dear Sir,

Sub: Declaration regarding compliance to Restrictions under Rule 144 (xi) of GFR 2017

Ref: 1) Enquiry No: _____
2) All other pertinent issues till date

I have read the clause regarding restrictions on procurement from a bidder of a country which shares a land border with India. I certify that _____ (SPECIFY THE NAME OF THE ORGANIZATION HERE), is not from such a country/ ~~has been registered with the Competent Authority (attach valid registration by the Competent Authority, i.e., the Registration Committee constituted by the Dept. for Promotion of Industry and Internal Trade (DPIIT).~~

I hereby certify that we fulfil all requirements in this regard and is eligible to be considered.

Thanking you,
Yours faithfully,

(Signature, Date & Seal of
Authorized Signatory of the Bidder)

Note: Bidders to note that in case above certification given by a bidder, whose bid is accepted, is found to be false, then this would be a ground for immediate termination and for taking further action in accordance with law and as per BHEL guidelines.

ANNEXURE 20

TREATMENT OF CASES REGARDING CONFLICT OF INTEREST

The bidder notes that a conflict of interest would said to have occurred in the tender process and execution of the resultant contract, in case of any of the following situations:

i) If its personnel have a close personal, financial, or business relationship with any personnel of BHEL who are directly or indirectly related to the procurement or execution process of the contract, which can affect the decision of BHEL directly or indirectly;

ii) The bidder (or his allied firm) provided services for the need assessment/ procurement planning of the Tender process in which it is participating;

iii) Procurement of goods directly from the manufacturers/ suppliers shall be preferred. However, if the OEM/Principal insists on engaging the services of an agent, such agent shall not be allowed to represent more than one manufacturer/ supplier in the same tender. Moreover, either the agent could bid on behalf of the manufacturer/ supplier or the manufacturer/ supplier could bid directly but not both. In case bids are received from both the manufacturer/ supplier and the agent, bid received from the agent shall be ignored. However, this shall not debar more than one Authorised distributor (with/ or without the OEM) from quoting equipment manufactured by an Original Equipment Manufacturer (OEM) in procurements under a Proprietary Article Certificate.

iv) A bidder participates in more than one bid in this tender process. Participation in any capacity by a Bidder (including the participation of a Bidder as a partner/ JV member or sub-contractor in another bid or vice-versa) in more than one bid shall result in the disqualification of all bids in which he is a party. However, this does not limit the participation of an entity as a sub-contractor in more than one bid if he is not bidding independently in his own name or as a member of a JV.

The Bidder declares that they have read and understood the above aspects, and the bidder confirms that such conflict of interest does not exist and undertakes that they will not enter into any illegal or undisclosed agreement or understanding, whether formal or informal with other Bidder(s), in this regard. This applies in particular to prices, specifications, certifications, subsidiary contracts, submission or non-submission of bids or any other actions to restrict competitiveness or to introduce cartelization in the bidding process. **In case, the Bidder is found having indulged in above activities, the same will be considered as a violation of the tender conditions, and suitab1e action shall be taken by BHEL as per extant policies/ guidelines.**

(Signature, Date & Seal of Authorized
Signatory of the Bidder)

BHARAT HEAVY ELECTRICALS LIMITED
TIRUCHIRAPPALLI-620 014.

Buyer Added Bid Specific Additional Terms & Conditions (ATC)

Note: This Annexure has to be mandatorily filled & signed by the manufacturer (or) mill and submitted along with Technical bid.

Any deviation to the below mentioned terms shall be stated specifically in the comments column for each term and also in case of acceptance to our terms, it will be construed that the whole term is understood and agreed in totality without any deviation.(If otherwise mentioned).

Sl No	BHEL Requirements	Supplier Comments
01	**Pre-Qualification Criteria:** 1.1 Organisational, Technical & Previous Experience: As defined in PQR 1.2 Financial: As defined in PQR: 1.3 Integrity Pact: Not Applicable. 1.4 Bidder must not be admitted under Corporate Insolvency Resolution Process or Liquidation as on date, by NCLT or any adjudicating authority/authorities, and shall submit undertaking (**Annexure-4**) to this effect. 1.5 Customer Approval: Applicable. The bid(s) are subjected to acceptance by the end customer. Post evaluation of PQR and Techno-Commercial acceptance, qualified bidders will be taken up for customer approval. Bidders will be required to submit credentials as and when requested by BHEL for taking up customer approval. Bids of PQR qualified, Techno-Commercially accepted and customer approved bidders alone will be considered for Part II evaluation. **Explanatory Notes for the PQR:** **i.** 'Supplied' in **PQR** means, bidder should have delivered the PQR: Fittings. Bidder shall submit the relevant documents against the above PQRs inclusive of Purchase order (wherein PO no., date, etc. is legible) along with proof of supply (i.e. - Completion Certificate/ Copy of Invoices / LR Copies/ Store Receipt Vouchers/ Payment Advice etc.) in the respective attachments in their offer in support of PQR. The "Contract" referred in Technical PQR may be Rate Contract/ Framework Agreement/ Purchase Order/ Work Order. **ii.** Bidder to submit Audited Balance Sheet and Profit and Loss Account for the respective years as indicated against Financial Turnover **PQR** above along with all annexures. **iii.** In case of audited Financial Statements have not been submitted for all the three years as indicated against Financial Turnover PQR above, then the applicable audited statements submitted by the bidders against the requisite three years, will be averaged for three years i.e. total divided by three. **iv.** If Financial Statements are not required to be audited statutorily, then instead of audited Financial Statements, Financial Statements are required to be certified by Chartered Accountant. **v.** Credentials furnished by the bidder against "PRE-QUALIFYING CRITERIA" shall be verified from the issuing authority for its authenticity. In case, any credential (s) is/are found to be spurious, offer of the bidder is liable to be rejected. BHEL reserves the right to initiate any further action as per extant guidelines for Suspension of Business Dealings as applicable in BHEL. **vi.** Price Bids of only those bidders shall be opened who stand qualified after compliance of PQR	
02	**Scope of Supply:** Supply of Fittings shall be to the addresses mentioned in Annexure-A, on F.O.R. Destination Basis. Unloading of materials shall be in BHEL's scope.	
03	**PRICE BASIS:** Price in INR should be quoted for F.O.R. Destination Basis.	

04	**TAXES & DUTIES:** **4.1** The Supplier/Vendor shall pay all (save the specific exclusions as enumerated in this clause) taxes, fees, license, charges, deposits, duties, tools, royalty, commissions, other charges, etc. which may be levied on the input goods & services consumed and output goods & services delivered in course of his operations in executing the contract. In case BHEL is forced to pay any of such taxes/duties, BHEL shall have the right to recover the same from his bills or otherwise as deemed fit along with the applicable overheads @5% and interest on the total value (i.e. amount paid by BHEL + overhead). However, provisions regarding **GST** on output supply (goods/service) and TDS/TCS as per Income Tax Act shall be as per following clauses. **4.2 GST (Goods and Services Tax)** **4.2.1** Rate quoted in GeM portal should be on FOR destination basis inclusive of all taxes, P&F, freight etc.; therefore, contractor's price/rates shall be **inclusive** of GST. Reimbursement of GST is subject to compliance of following terms and conditions. BHEL shall have the right to deny payment of GST and to recover any loss to BHEL on account of tax, interest, penalty etc. for non-compliance of any of the following condition. **4.2.2** The admissibility of GST, taxes and duties referred in this chapter or elsewhere in the contract shall be limited to direct transactions between BHEL & its Supplier/Vendor. BHEL shall not consider GST on any transaction other than the direct transaction between BHEL & its Supplier/Vendor. **4.2.3** Supplier/Vendor shall obtain prior written consent of BHEL before billing the amount towards such taxes. Where the GST laws permit more than one option or methodology for discharging the liability of tax/levy/duty, BHEL shall have the right to adopt the appropriate one considering the amount of tax liability on BHEL/Client as well as procedural simplicity with regard to assessment of the liability. The option chosen by BHEL shall be binding on the Contractor for discharging the obligation of BHEL in respect of the tax liability to the Supplier/Vendor. **4.2.4** Supplier/Vendor has to submit GST registration certificate of the concerned state. Supplier/Vendor also needs to ensure that the submitted GST registration certificate should be in active status during the entire contract period. **4.2.5** Supplier/Vendor has to issue Invoice/Debit Note/Credit Note indicating HSN/SAC code, Description, Value, Rate, applicable tax and other particulars in compliance with the provisions of relevant GST Act and Rules made thereunder. **4.2.6** Supplier/Vendor has to submit GST compliant invoice within the due date of invoice as per GST Law. In case of delay, BHEL reserves the right of denial of GST payment if there occurs any hardship to BHEL in claiming the input thereof. In case of goods, Supplier/Vendor has to provide scan copy of invoice & GR/LR/RR to BHEL before movement of goods starts to enable BHEL to meet its GST related compliances. Special care should be taken in case of month end transactions. **4.2.7** Supplier/Vendor has to ensure that invoice in respect of such services which have been provided/completed on or before end of the month should not bear the date later than last working day of the month in which services are performed. **4.2.8** Subject to other provisions of the contract, GST amount claimed in the invoice shall be released on fulfilment of all the following conditions by the Supplier/Vendor: - a) Supply of goods and/or services have been received by BHEL. b) Original Tax Invoice has been submitted to BHEL. c) Supplier/Vendor has submitted all the documents required for processing of bill as per contract/ purchase order/ work order. d) In cases where e-invoicing provision is applicable, Supplier/Vendor is required to submit invoice in compliance with e-invoicing provisions of GST Act and Rules made thereunder.	

e) Supplier/Vendor has filed all the relevant GST return (e.g. GSTR-1, GSTR-3B, etc.) pertaining to the invoice submitted and submit the proof of such return along with immediate subsequent invoice. In case of final invoice/ bill, contractor has to submit proof of such return within fifteen days from the due date of relevant return.
f) Respective invoice has appeared in BHEL's GSTR - 2A for the month corresponding to the month of invoice and in GSTR-2B of the month in which such invoices has been reported by the contractor along with status of ITC availability as "YES" in GSTR-2B. Alternatively, BG of appropriate value may be furnished which shall be valid at least one month beyond the due date of confirmation of relevant payment of GST on GSTN portal or sufficient security is available to adjust the financial impact in case of any default by the Supplier/Vendor.
g) Supplier/Vendor has to submit an undertaking confirming the payment of all due GST in respect of invoices pertaining to BHEL.

4.2.9 Any financial loss arises to BHEL on account of failure or delay in submission of any document as per contract/purchase order/work order at the time of submission of Tax invoice to BHEL, shall be deducted from Supplier/Vendor's bill or otherwise as deemed fit.

4.2.10 TDS as applicable under GST law shall be deducted from Supplier/Vendor's bill.

4.2.11 Supplier/Vendor shall comply with the provisions of e-way bill wherever applicable. Further wherever provisions of GST Act permits, all the e-way bills, road permits etc. required for transportation of goods needs to be arranged by the contractor.

4.2.12 Supplier/Vendor shall be solely responsible for discharging his GST liability according to the provisions of GST Law and BHEL will not entertain any claim of GST/interest/penalty or any other liability on account of failure of Supplier/Vendor in complying the provisions of GST Law or discharging the GST liability in a manner laid down thereunder.

4.2.13 In case declaration of any invoice is delayed by the vendor in his GST return or any invoice is subsequently amended/altered/deleted on GSTN portal which results in any adverse financial implication on BHEL, the financial impact thereof including interest/penalty shall be recovered from the Supplier/Vendor's due payment.

4.2.14 Any denial of input credit to BHEL or arising of any tax liability on BHEL due to non-compliance of GST Law by the Supplier/Vendor in any manner, will be recovered along with liability on account of interest and penalty (if any) from the payments due to the Supplier/Vendor.

4.2.15 In the event of any ambiguity in GST law with respect to availability of input credit of GST charged on the invoice raised by the contractor or with respect to any other matter having impact on BHEL, BHEL's decision shall be final and binding on the Supplier/Vendor.

4.2.16 Variation in Taxes & Duties:

Any upward variation in GST shall be considered for reimbursement provided supply of goods and services are made within schedule date stipulated in the contract or approved extended schedule for the reason solely attributable to BHEL. However downward variation shall be subject to adjustment as per actual GST applicability.
In case the Government imposes any new levy/tax on the output service/goods after price bid opening, the same shall be reimbursed by BHEL at actual. The reimbursement under this clause is restricted to the direct transaction between BHEL and its Supplier/Vendor only and within the contractual delivery period only.
In case any new tax/levy/duty etc. becomes applicable after the date of Bidder's offer but before opening of the price Bid, the Bidder/ Supplier/Vendor must convey its impact on his price duly substantiated by documentary evidence in support of the same before opening of price bid. Claim for any such impact after opening the price bid will not be considered by BHEL for reimbursement of tax or reassessment of offer.

	4.3 Income Tax: **TDS/TCS** as applicable under Income Tax Act, 1961 or rules made thereunder shall be deducted/collected from Supplier/Vendor's bill. **4.4 Supplier HSN Code & Applicable GST % (**To be filled by Supplier**)**	
05	**MATERIAL DISPATCH CLEARANCE CERTIFICATE (MDCC):** MDCC shall be issued by BHEL. No material shall be dispatched by supplier unless and until Material Dispatch Clearance Certificate (MDCC) issued by BHEL Site. In case any material is dispatched without MDCC and any loss is incurred by Supplier/Vendor for any reason whatsoever, BHEL shall not be responsible in any manner to compensate the supplier in this regard.	
06	**INSPECTION / INSPECTION & TESTING AT SUPPLIERS WORKS:** Pre-dispatch Inspection at Seller Premises by IBR / IBR authorized TPI, BHEL / BHEL authorized TPI and Customer (if applicable). Post Receipt Inspection at consignee before acceptance of stores: By BHEL. BHEL reserves the right to inspect the material during manufacturing and also to get tested the material under dispatch from third party. The test results of third party test shall be final and binding on the Supplier/Vendor. BHEL will reserve the right to inspect/test the material during/after manufacturing at suppliers' works, and/or at BHEL Site. In case of rejection at any stage, Supplier/Vendor shall be liable to replace the materials at his own cost.	
07	**DELIVERY:** The delivery of all the schedules shall be to the addresses mentioned in Annexure-A. Delivery period shall be 90 days from the date of GeM Contract date. Delivery period indicated above is inclusive of transit time till material receipt at destination. **NOTE:** **a)** If the delivery of supply as detailed above gets delayed beyond the delivery period, the Supplier/Vendor shall request for a delivery extension and BHEL at its discretion may extend the Contract. However, if any 'Delivery extension' is granted to the Supplier/Vendor for completion of supply, due to backlog attributable to the Supplier/Vendor, then it shall be without prejudice to the rights of BHEL to impose LD for the delays attributable to the Supplier/Vendor. **b)** In case BHEL increase the quantity during currency of the contract in line with quantity variation clause (GeM Option Clause), delivery extension shall be given for supply of these additional quantity.	
08	**TRANSIT INSURANCE:** For the materials which are destined to Project site, transit Insurance of materials is in BHEL scope. For the materials which are destined to Ward 8, transit Insurance of materials is in Supplier scope.	
09	**PAYMENT TERMS:** **a) FOR NON MSME Bidders,** 100% payment shall be released within 90 days from Site Entry / Acknowledgment Date, subject to submission of billing documents as mentioned in sl. no. 10 below. **b) FOR MSME Bidders**, 100% payment shall be released within 45 days from Site Entry / Acknowledgment Date, subject to submission of billing documents as mentioned in sl. no. 10 below.	

	c) FOR MEDIUM ENTERPRISES Bidders, 100% payment shall be released within 60 days from Site Entry / Acknowledgment Date, subject to submission of billing documents as mentioned in sl. no. 10 below. However, GST amount shall be reimbursed in line with compliance to Cl. No. 4 (Taxes & Duties) above. **NO INTEREST PAYABLE TO CONTRACTOR** No interest shall be payable on the security deposit or any other money due to the Supplier.	
10	**DOCUMENTS REQUIRED FOR BILL PROCESSING:** The following documents are required to be sent with Material Dispatch/Billing Documents: • Original Tax Invoice (As per Cl. No. 4 above). • Delivery Challan / Packing list • Warranty Certificate • Original Inspection Report (IR) and original quality documents • Duplicate for Transporter • Original Consignee copy of LR • Stores acknowledged Lorry Way Bill & E Way bill • GeM Invoice Note: Suppliers are required to upload their invoice and other relevant documents to the BHEL Trichy Material Management System. To do so, they must visit this web page https://trichy.bhel.com/mm/index.jsp and log in using their vendor code (provided by BHEL Trichy) as their username. If a supplier does not have the necessary login credentials, they should contact BHEL Purchase for assistance. A step-by-step guide for uploading invoices is available on the portal for reference. BHEL internal SAP purchase order (PO) number, required for document uploading, will be shared with the successful supplier upon the placement of the GeM contract. **Key Points for Supply / Works / Service Invoices in SUVIDHA** 1. **Registration of all supply / works / service invoices**, irrespective of the invoice amount, is **mandatory** in SUVIDHA. 2. **For net invoice amount exceeding ₹5 lakhs (including taxes):** o Upload of **Class 3 Digitally Signed Tax Invoice** is **mandatory**. o All other documents as per the **PO checklist** must also be uploaded. o However, if any other **digitally signed document** is specified in the PO checklist , then **Class 3 Digitally Signed document is mandatory for uploading** 3. **For net invoice amount up to ₹5 lakhs (including taxes):** o Upload of all documents as per the **PO checklist** is **mandatory**. o All Documents **can be uploaded without a digital signature**. However, if a **digitally signed document** is specified in the PO checklist but a **non-digitally signed** version is uploaded, the **hard copy must be submitted**. Grievance Redressal Mechanism:	

	To promote transparency and ensure fair treatment of all bidders, a structured Grievance Redressal Mechanism is in place to address any concerns or issues arising during the tendering process or in subsequent business dealings with the company. Suppliers/Contractors are requested to follow the below escalation process for grievance resolution: 1. First Level: Any grievance should initially be addressed to the designated Dealing Officer, whose contact details are provided in the Notice Inviting Tender (NIT)/Contract. 2. Second Level: If the issue remains unresolved, it may be escalated by lodging a formal grievance through the SUVIDHA Portal: https://suvidha.bhel.in/suvidha/. Responses will be provided in accordance with the defined escalation matrix.	
11	**BREACH OF CONTRACT, REMEDIES AND TERMINATION:** **11.1** The following shall amount to breach of contract: I. Non-supply of material/ non-completion of work by the Supplier/Vendor within scheduled delivery/ completion period as per contract or as extended from time to time. II. The Supplier/Vendor fails to perform as per the activity schedule and there are sufficient reasons even before expiry of the delivery/ completion period to justify that supplies shall be inordinately delayed beyond contractual delivery/ completion period III. The Supplier/Vendor delivers equipment/ material not of the contracted quality. IV. The Supplier/Vendor fails to replace the defective equipment/ material/ component as per guarantee clause. V. Withdrawal from or abandonment of the work by the Supplier/Vendor before completion as per contract. VI. Assignment, transfer, subletting of Contract by the Supplier/Vendor without BHEL's written permission resulting in termination of Contract or part thereof by BHEL. VII. Non-compliance to any contractual condition or any other default attributable to Supplier/Vendor. VIII. Any other reason(s) attributable to Vendor towards failure of performance of contract. In case of breach of contract, BHEL shall have the right to terminate the Purchase Order/ Contract either in whole or in part thereof without any compensation to the Supplier/Vendor. IX. Any of the declarations furnished by the contractor at the time of bidding and/ or entering into the contract for supply are found untruthful and such declarations were of a nature that could have resulted in non-award of contract to the contractor or could expose BHEL and/ or Owner to adverse consequences, financial or otherwise. X. Supplier/Vendor is convicted of any offence involving corrupt business practices, antinational activities or any such offence that compromises the business ethics of BHEL, in violation of the Integrity Pact entered into with BHEL has the potential to harm the overall business of BHEL/ Owner. **Note**- Once BHEL considers that a breach of contract has occurred on the part of Supplier/Vendor, BHEL shall notify the Supplier/Vendor by way of notice in this regard. Contractor shall be given an opportunity to rectify the reasons causing the breach of contract within a period of 14 days. In case the contractor fails to remedy the breach, as mentioned in the notice, to the satisfaction of BHEL, BHEL shall have the right to take recourse to any of the remedial actions available to it under the relevant provisions of contract. **11.2 Remedies in case of Breach of Contract.** i. Wherein the period as stipulated in the notice issued under clause 11.1 has expired and Supplier/Vendor has failed to remedy the breach, BHEL will have the right to terminate the contract on the ground of "Breach of Contract" without any further notice to contractor.	

ii. Upon termination of contract, BHEL shall be entitled to recover an amount equivalent to 10% of the Contract Value for the damages on account of breach of contract committed by the Supplier/Vendor. This amount shall be recovered by way of encashing the security instruments like performance bank guarantee etc available with BHEL against the said contract. In case the value of the security instruments available is less than 10% of the contract value, the balance amount shall be recovered from other financial remedies (i.e. available bills of the Supplier/Vendor, retention amount, from the money due to the Supplier/Vendor etc. with BHEL) or the other legal remedies shall be pursued.

iii. wherever the value of security instruments like performance bank guarantee available with BHEL against the said contract is 10% of the contract value or more, such security instruments to the extent of 10% contract value will be encashed. In case no security instruments are available or the value of the security instruments available is less than 10% of the contract value, the 10% of the contract value or the balance amount, as the case may be, will be recovered in all or any of the following manners:

iv. In case the amount recovered under sub clause (a) above is not sufficient to fulfil the amount recoverable then; a demand notice to deposit the balance amount within 30 days shall be issued to Supplier/Vendor.

v. If Supplier/Vendor fails to deposit the balance amount within the period as prescribed in demand notice, following action shall be taken for recovery of the balance amount:

a) from dues available in the form of Bills payable to defaulted Supplier/Vendor against the same contract.

b) If it is not possible to recover the dues available from the same contract or dues are insufficient to meet the recoverable amount, balance amount shall be recovered from any money(s) payable to Supplier/Vendor under any contract with other Units of BHEL including recovery from security deposits or any other deposit available in the form of security instruments of any kind against Security deposit or EMD.

vi. In-case recoveries are not possible with any of the above available options, Legal action shall be initiated for recovery against defaulted supplier/Vendor.

vii. It is an agreed term of contract that this amount shall be a genuine pre-estimate of damages that BHEL would incur in completion of balance contractual obligation of the contract through any other agency and BHEL will not be required to furnish any other evidence to the Supplier/Vendor for the purpose of estimation of damages.

viii. In addition to the above, imposition of liquidated damages, debarment, termination, de-scoping, short-closure, etc., shall be applied as per provisions of the contract.

Note:

1) The defaulting Supplier/Vendor shall not be eligible for participation in any of the future enquiries floated by BHEL to complete the balance work. The defaulting contractor shall mean and include:

(a) In case defaulted Supplier/Vendor is the Sole Proprietorship Firm, any Sole Proprietorship Firm owned by same Sole Proprietor.

(b) In case defaulted Supplier/Vendor is The Partnership Firm, any firm comprising of same partners/ some of the same partners; or sole proprietorship firm owned by any partner(s) as a sole proprietor.

LD against delay in executed supply in case of Termination of Contract:

LD against delay in executed supply shall be calculated in line with LD clause no. 15.0 below, for the delay attributable to Supplier/Vendor. For limiting the maximum value of LD, contract value shall be taken as Executed Value of supply till termination of contract.

Method for calculation of "LD against delay in executed supply in case of termination of contract" is given below.

i. Let the time period from scheduled date of start of supply till termination of contract excluding the period of Hold (if any) not attributable to contractor = T1

ii. **Let the value of executed supply till the time of termination of contract= X**

iii. Let the Total Executable Value of supply for which inputs/fronts were made available to Supplier/Vendor and were planned for execution till termination of contract = Y

iv. Delay in executed supply attributable to Supplier/Vendor i.e. T2=[1-(X/Y)] x T1

v. LD shall be calculated in line with LD clause (clause 18.0) of the Contract for the delay attributable to Supplier/Vendor taking "X" as Contract Value and "T2" as period of delay attributable to Supplier/Vendor.

12 BILL TO/ SHIP TO ADDRESS:

BILL TO: BHEL TRICHY
SHIP TO: Site locations

13 WARRANTY:

Warranty of the supplied products shall be 2 years from the date of final acceptance of goods or after completion of installation, commissioning & testing of goods (if included in the scope of supply), at consignee location. OEM Warranty certificates must be submitted by Successful Bidder at the time of delivery of Goods. The seller should guarantee the rectification of goods in case of any break down during the guarantee period. Seller should have well established Installation, Commissioning, Training, Troubleshooting and Maintenance Service group in INDIA for attending the after sales service. Details of Service Centres near consignee destinations are to be uploaded along with the bid

14 MICRO AND SMALL ENTERPRISES (MSE):

Any Bidder falling under MSE category shall furnish the following details & submit documentary evidence/ Govt. Certificate etc. in support of the same along with their techno-commercial offer.

Type under MSE	UDYAM No	SC/ST Owned	Women Owned	Others (Excluding SC/ST/Women)
Micro				
Small				

Note: If the bidder does not furnish the above, offer shall be processed construing that the bidder is not falling under MSE category.

a) MSE suppliers can avail the intended benefits in respect of the procurements related to the Goods and Services only (Definition of Goods and Services as enumerated by Govt. of India vide Office Memorandum F. No. 21(8)/2011-MA dtd. 09/11/2016 office of AS & DC, MSME) only if they submit along with the offer, attested copies of either Udyam Registration. Date to be reckoned for determining the deemed validity will be the last date of Technical Bid submission. Non-submission of supporting document in GeM portal will lead to consideration of their bids at par with other bidders. No benefits shall be applicable for this enquiry if the above required documents are not uploaded at the time of bid submission. Documents submitted by the bidder shall be verified by BHEL for rendering the applicable benefits.

15 LIQUIDATED DAMAGE:

If the Seller/Service Provider fails to deliver any or all of the Goods/Services within the original/re-fixed delivery period(s) specified in the contract, the Buyer will be entitled to deduct/recover the Liquidated Damages for the delay, unless covered under Force Majeure conditions aforesaid, @ 0.5% of the contract value of delayed quantity per week or part of the week of delayed period, until actual delivery or performance, as pre-estimated damages not exceeding 10% of the total contract value without any controversy/dispute of any sort whatsoever.

	This is shall be treated as LD Mode PV 0.5% of Undelivered value subject to a maximum of 10% of total contract value. Site Entry / Acknowledgment date will be considered for Date of reckoning LD.	
16	**INTEGRITY PACT (IP):** ~~Applicable~~ /Not Applicable	
17	**PREFERENCE TO MAKE IN INDIA:** For this procurement, the local content to categorize a Supplier/Vendor as a Class I local supplier/ Class II local Supplier/Non-Local Supplier and purchase preferences to Class I local supplier, is as defined in Public Procurement (Preference to Make in India), Order 2017 dated 04.06.2020 issued by DPIIT. In case of subsequent orders issued by the nodal ministry, changing the definition of local content for the items of the GeM Bid, the same shall be applicable even if issued after issue of this GeM Bid, but before opening of Part-II bids against this GeM Bid. **17.1 Compliance to Restrictions under Rule 144 (xi) of GFR 2017:** I. Any bidder from a country which shares a land border with India will be eligible to bid in this tender only if the bidder is registered with the Competent Authority. The Competent Authority for the purpose of this Clause shall be the Registration Committee constituted by the Department for Promotion of Industry and Internal Trade (DPIIT). II. "Bidder" (including the term 'tenderer', 'consultant' or 'service provider' in certain contexts) means any person or firm or company, including any member of a consortium or joint venture (that is an association of several persons, or firms or companies), every artificial juridical person not falling in any of the descriptions of bidders stated hereinbefore, including any agency branch or office controlled by such person, participating in a procurement process. III. "Bidder from a country which shares a land border with India" for the purpose of this Clause means: - a. An entity incorporated established or registered in such a country; or b. A subsidiary of an entity incorporated established or registered in such a country; or c. An entity substantially controlled through entities incorporated, established or registered in such a country; or d. An entity whose beneficial owner is situated in such a country; or e. An Indian (or other) agent of such an entity; or f. A natural person who is a citizen of such a country; or g. A consortium or joint venture where any member of the consortium or joint venture falls under any of the above. IV. The beneficial owner for the purpose of (III) above will be as under: 1. In case of a company or Limited Liability Partnership, the beneficial owner is the natural person(s), who, whether acting alone or together or through one or more juridical person, has a controlling ownership interest or who exercises control through other means. Explanation a. "Controlling ownership interest" means ownership of or entitlement to more than twenty-five per cent of shares or capital or profits of the company. b. "Control" shall include the right to appoint majority of the directors or to control the management or policy decisions including by virtue of their shareholding or management rights or shareholders' agreements or voting agreements. 2. In case of a partnership firm, the beneficial owner is the natural person(s) who, whether acting alone or together, or through one or more juridical person, has ownership of entitlement to more than fifteen percent of capital or profits of the partnership.	

	3. In case of an unincorporated association or body of individuals, the beneficial owner is the natural person(s), who, whether acting alone or together, or through one or more juridical person has ownership of or entitlement to more than fifteen percent of the property or capital or profits of the such association or body of individuals. 4. Where no natural person is identified under (1) or (2) or (3) above, the beneficial owner is the relevant natural person who holds the position of senior managing official; 5. In case of a trust, the identification of beneficial owner(s) shall include identification of the author of the trust, the trustee, the beneficiaries with fifteen percent or more interest in the trust and any other natural person exercising ultimate effective control over the trust through a chain of control or ownership. (i) The bidder shall provide undertaking for their compliance to this Clause, in the format provided in Annexure-13. (ii) Registration of the bidder with Competent Authority should be valid at the time of submission of bids and at the time of acceptance of the bids	
18	**Settlement of Dispute:** If any dispute or difference of any kind whatsoever shall arise between BHEL and the Supplier/Vendor, arising out of the contract for the performance of the work whether during the progress of contract termination, abandonment or breach of the contract, it shall in the first place referred to Designated Engineer for amicable resolution by the parties. Designated Engineer (to be nominated by BHEL for settlement of disputes arising out of the contract) who within 60 days after being requested shall give written notice of his decision to the contractor. Save as hereinafter provided, such decision in respect of every matter so referred shall forthwith be given effect to by the Supplier/Vendor who shall proceed with the work with all due diligence, whether he or BHEL desires to resolve the dispute as hereinafter provided or not. If after the Designated Engineer has given written notice of this decision to the party and no intention to pursue the dispute has been communicated to him by the affected party within 30 days from the receipt of such notice, the said decision shall become final and binding on the parties. In the event the Supplier/Vendor being dissatisfied with any such decision or if amicable settlement cannot be reached then all such disputed issues shall be resolved through conciliation in terms of the BHEL Conciliation Scheme 2018 as per Clause 18.1 **18.1 Conciliation:** Any dispute, difference or controversy of whatever nature howsoever arising under or out of or in relation to this Agreement (including its interpretation) between the Parties, and so notified in writing by either Party to the other Party (the "Dispute") shall, in the first instance, be attempted to be resolved amicably in accordance with the conciliation procedure as per BHEL Conciliation Scheme 2018. The proceedings of Conciliation shall broadly be governed by Part-III of the Arbitration and Conciliation Act 1996 or any statutory modification thereof and as provided in - "Procedure for conduct of conciliation proceedings" (as available in www.bhel.com)). **Note:** Ministry of Finance has issued OM reference No. 1/2/24 dated 03.06.2024 regarding "Guidelines for Arbitration and Mediation in Contracts of Domestic Public Procurement. In the said OM it has been recommended that Government departments/ Entities/agencies are to encourage mediation under the Mediation Act. 2023. The said Act has not yet been notified by the Government. Therefore, the clause "Settlement of Disputes" shall be modified accordingly as and when the Mediation Act 2023 gets notified. **18.2 ARBITRATION:** 18.2.1 Except as provided elsewhere in this Contract, in case Parties are unable to reach amicable settlement (whether by Conciliation to be conducted as provided in Clause 14.1 herein above or otherwise) in respect of any dispute or difference; arising out of the formation, breach, termination, validity or execution of the Contract; or, the	

respective rights and liabilities of the Parties; or, in relation to interpretation of any provision of the Contract; or. in any manner touching upon the Contract (hereinafter referred to as the 'Dispute'), then, either Party may, refer the disputes to **Madras High Court, Arbitration Centre (MHCAC)** and such dispute to be adjudicated by Sole Arbitrator appointed in accordance with the Rules of said Arbitral Institution.

18.2.2 A party willing to commence arbitration proceeding shall invoke Arbitration Clause by giving notice to the other party in terms of section 21 of the Arbitration & Conciliation Act, 1996 (hereinafter referred to as the 'Notice') before referring the matter to arbitral institution. The Notice shall be addressed to the Head of the Unit, BHEL, executing the Contract and shall contain the particulars of all claims to be referred to arbitration with sufficient detail and shall also indicate the monetary amount of such claim including interest, if any.

18.2.3 After expiry of 30 days from the date of receipt of aforesaid notice, the party invoking the Arbitration shall submit that dispute to the Arbitral Institution- **Madras High Court, Arbitration Centre (MHCAC)-** and that dispute shall be adjudicated in accordance with their respective Arbitration Rules. The matter shall be adjudicated by a Sole Arbitrator who shall necessarily be a Retd Judge having considerable experience in commercial matters to be appointed/nominated by the respective institution. The cost/expenses pertaining to the said Arbitration shall also be governed in accordance with the Rules of the respective Arbitral Institution. The decision of the party invoking the Arbitration for reference of dispute to **Madras High Court, Arbitration Centre (MHCAC)-** for adjudication of that dispute shall be final and binding on both the parties and shall not be subject to any change thereafter. The institution once selected at the time of invocation of dispute shall remain unchanged.

18.2.4 The fee and expenses shall be borne by the parties as per the Arbitral Institutional rules.

18.2.5 The Arbitration proceedings shall be in English language and the seat of Arbitration shall be **Trichy.**

18.2.6 Subject to the above, the provisions of Arbitration & Conciliation Act 1996 and any amendment thereof shall be applicable. All matters relating to this Contract and arising out of invocation of Arbitration clause are subject to the exclusive jurisdiction of the Court(s) situated at **Trichy.**

18.2.7 Notwithstanding any reference to the Designated Engineer or Conciliation or Arbitration herein, a. the parties shall continue to perform their respective obligations under the Contract unless they otherwise agree. Settlement of Dispute clause cannot be invoked by the Contractor, if the Contract has been mutually closed or 'No Demand Certificate' has been furnished by the Contractor or any Settlement Agreement has been signed between the Employer and the Contractor.

18.2.8 It is agreed that Mechanism of resolution of disputes through arbitration shall be available only in the cases where the value of the dispute is less than Rs. 10 Crores.

18.2.9 In case the disputed amount Claim, Counter claim including interest is Rs. 10 crores and above, the parties shall be within their rights to take recourse to remedies other than Arbitration, as may be available to them under the applicable laws after prior intimation to the other party. Subject to the aforesaid conditions, provisions of the Arbitration and Conciliation Act, 1996 and any statutory modifications or re-enactment thereof as amended from time to time, shall apply to the arbitration proceedings under this clause.

18.2.10 In case, multiple arbitrations are invoked (whether sub-judice or arbitral award passed) by any party to under this contract, then the cumulative value of claims (including interest claimed or awarded) in all such arbitrations shall be taken in account while arriving at the total claim in dispute for the subject contract for the purpose of clause 11.2. Disputes having cumulative value of less than 10 crores shall be resolved through arbitration and any additional dispute shall be adjudicated by the court of competent jurisdiction.

	18.3 In case of Contract with Public Sector Enterprise (PSE) or a Government Department, the following shall be applicable: In the event of any dispute or difference relating to the interpretation and application of the provisions of commercial contract(s) between Central Public Sector Enterprises (CPSEs)/ Port Trusts inter se and also between CPSEs and Government Departments/Organizations (excluding disputes concerning Railways, Income Tax, Customs & Excise Departments), such dispute or difference shall be taken up by either party for resolution through AMRCD (Administrative Mechanism for Resolution	
19	**JURISDICTION** Subject to clause 18 of this contract, the Civil Court having original Civil Jurisdiction at Tiruchirappalli, Tamilnadu shall alone have exclusive jurisdiction in regard to all matters in respect of the Contract. **GOVERNING LAWS** The contract shall be governed by the Law for the time being in force in the Republic of India.	
20	**FORCE MAJEURE** 20.1 "Force Majeure" shall mean circumstance which is: a) beyond control of either of the parties to contract, b) either of the parties could not reasonably have provided against the event before entering into the contract, c) having arisen, either of the parties could not reasonably have avoided or overcome, and d) not substantially attributable to either of the parties and Prevents the performance of the contract, such circumstances include but shall not be limited to: i. War, hostilities, invasion, act of foreign enemies. ii. Rebellion, terrorism, revolution, insurrection, military or usurped power, or civil war. iii. Riot, commotion or disorder by persons other than the contractor's personnel and other employees of the contractor and sub-contractors. iv. Strike or lockout not solely involving the contractor's personnel and other employees of the contractor and sub-contractors. v. Encountering munitions of war, explosive materials, ionizing radiation or contamination by radio-activity, except as may be attributable to the contractor's use of such munitions, explosives, radiation or radio- activity. vi. Natural catastrophes such as earthquake, tsunami, volcanic activity, hurricane or typhoon, flood, fire, cyclones etc. vii. Epidemic, pandemic etc. 20.2 The following events are explicitly excluded from Force Majeure and are solely the responsibilities of the non-performing party: a) any strike, work-to-rule action, go-slow or similar labour difficulty (b) late delivery of equipment or material (unless caused by Force Majeure event) and (c) economic hardship. 20.3 If either party is prevented, hindered or delayed from or in performing any of its obligations under the Contract by an event of Force Majeure, then it shall notify the other in writing of the occurrence of such event and the circumstances thereof within 15 (fifteen) days after the occurrence of such event. 20.4 The party who has given such notice shall be excused from the performance or punctual performance of its obligations under the Contract for so long as the relevant event of Force Majeure continues and to the extent that such party's performance is prevented, hindered or delayed. The Time for Completion shall be extended by a period of time equal to period of delay caused due to such Force Majeure event. 20.5 Delay or non-performance by either party hereto caused by the occurrence of any event of Force Majeure shall not i) Constitute a default or breach of the Contract.	

ii) Give rise to any claim for damages or additional cost expense occasioned thereby, if and to the extent that such delay or non-performance is caused by the occurrence of an event of Force Majeure.

20.6 BHEL at its discretion may consider short closure of contract after 1 year of imposition of Force Majeure in line with extant guidelines. In any case, Supplier/Vendor cannot consider deemed short-closure after 1 year of imposition of Force Majeure.

21 **Non-Disclosure Agreement:**
The bidders shall enter into the Non-disclosure agreement separately. (Annexure 7 attached).

22 **Cartel Formation**
The Bidder declares that they will not enter into any illegal or undisclosed agreement or understanding, whether formal or informal with other Bidder(s). This applies in particular to prices, specifications, certifications, subsidiary contracts, submission or non-submission of bids or any other actions to restrict competitiveness or to introduce cartelization in the bidding process. In case, the Bidder is found having indulged in above activities, suitable action shall be taken by BHEL as per extant policies/ guidelines.

23 **Fraud Prevention Policy**
Bidder along with its associate /collaborators /sub-contractors /sub-vendors / consultants / service providers shall strictly adhere to BHEL Fraud Prevention Policy displayed on BHEL website http://www.bhel.com and shall immediately bring to the notice of BHEL Management about any fraud or suspected fraud as soon as it comes to their notice.

24 **Suspension of Business Dealings with Suppliers / Contractors:**
The offers of the bidders who are under suspension as also the offers of the bidders, who engage the services of the banned firms / principal / agents, shall be rejected. The list of banned firms is available on BHEL website www.bhel.com.

If any bidder / supplier / contractor during pre-tendering / tendering / post tendering / award /execution / post-execution stage indulges in any act, including but not limited to, mal-practices, cheating, bribery, fraud or and other misconduct or formation of cartel so as to influence the bidding process or influence the price or tampers the tendering process or acts or omits in any manner which tantamount to an offence punishable under any provision of the Indian Penal Code, 1860(Bhartiya Nyaya Samhita 2023) or any other law in force in India, or does anything which is actionable under the Guidelines for Suspension of Business dealings, action may be taken against such bidder / supplier / contractor as per extant guidelines of the company available on www.bhel.com and / or under applicable legal provisions. Guidelines for suspension of business dealings is available in the webpage:
http://www.bhel.com/vender_registration/vender.php.

25 Bid should be free from correction, overwriting, using corrective fluid, etc. Any interlineation, cutting, erasure or overwriting shall be valid only if they are attested under full signature(s) of person(s) signing the bid else bid shall be liable for rejection. In the event of any Technical or Commercial queries, the same may please be addressed to the following BHEL concerned before Part I opening-

Ms. M. Kurinjiarasi	Mr. R Meganathan
Manager / MM / Purchase 4th Floor, 24 Building, HPBP BHEL Trichy 620014. 0431-257-7597 kurinji@bhel.in	Sr Manager / MM / Purchase 4th Floor, 24 Building, HPBP BHEL Trichy 620014. 0431-257-5458 rmega@bhel.in

26 **Order of Precedence:**
In the event of any ambiguity or conflict between the Tender Documents, the order of precedence shall be in the order below:

a. Amendments/Clarifications/Corrigenda/Errata etc. issued in respect of the tender documents by BHEL.
b. Buyer Added Bid Specific ATC
c. GeM Bid Technical Conditions of Contract (TCC)
d. GeM GTC

27	**Note:** 1. In the event of our customer order covering this tender being cancelled /placed on hold /otherwise modified, BHEL would be constrained to accordingly cancel / hold / modify the tender at any stage of execution. 2. BHEL may negotiate the L1 rate, if not meeting our budget / estimated cost. BHEL may re-float the tender opened, if L1 price is not acceptable to BHEL even after negotiation. Any deviation from the conditions specified in TECHNO-COMMERCIAL TERMS AND CONDITIONS, will lead to rejection of offer. 3. Any change in applicable rates of Tax or any other statutory levies (Direct / Indirect) or any new introduction of any levy by means of statute and its corresponding liability for the deliveries beyond the agreed delivery date for reasons not attributable to BHEL will be to vendors account. BHEL will not reimburse the same and any subsequent claim in this respect will be summarily rejected. 4. BHEL reserves its right to reject an offer due to unsatisfactory past performance by the respective Vendor in the execution of any contract to any BHEL project / Unit. 5. The offers of the bidders who are under suspension and also the offers of the bidders, who engage the services of the banned firms /principal/agents, shall be rejected. The list of banned firms is available on BHEL web site www.bhel.com. 6. Recovery / deduction as applicable as per Direct and Indirect taxes as notified by Govt. Of India from time to time will be made and information/certificate for such deduction/recoveries shall be provided by BHEL to the vendor.	
28	**Enclosure:** Annexure-1: Check List. Annexure-3: No Deviation Certificate Annexure-4: Declaration regarding Insolvency/ Liquidation/ Bankruptcy Proceedings Annexure-6- Declaration by Authorised Signatory regarding Authenticity of submitted documents Annexure-7: Non-Disclosure Certificate Annexure-10: Declaration reg. Related Firms & their areas of Activities Annexure-11: Declaration for relation in BHEL Annexure-12: Declaration reg. minimum local content in line with revised public procurement Annexure-13: Declaration regarding compliance to Restrictions under Rule 144 (xi) of GFR 2017 Annexure- 20: Treatment of cases regarding conflict of interest	

SIGNED BY MANUFACTURER / MILL