Technical Specifications				
SL. No	Description and Technical Specification of the item	QTY	UNIT	Delivery
1	**10M CONDUIT FOR WIRE FEEDING IN 20 TORCH:** 10M LONG FLEXIBLE CONDUIT CABLE ASSEMBLY FOR WIRE FEEDING FROM DRUM TO WIRE FEEDER FOR TOP TORCH WITH(9/16"-18UNF) FEMALE THREAD ON BOTH ENDS AS PER DRAWING NO. 3M-10A61-14849/Revision No.02 for SL.NO.4.(10 METERS LONG). 1)ADOPTER MUST BE AS PER DRAWING NO.4M-10A61-29179/01. 2)RUBBER SLEEVE MUST BE AS PER DRAWING NO. 4M-10A61-29180. 3)NIPPLE MUST BE AS PER DRAWING NO.4M-10A61-29178. Test certificate is required along with supply	40	NO	45 DAYS

Sign. of the AUTHORISED SIGNATORY
(With Name, Designation and Company seal)

PQC (149545136)		
Sl. No.	Pre- Qualification Criteria	Bidder confirmation
1	If Bidder is a manufacturer, Kindly comment in bidder remark.	
2	Any deviation from the Specification are to be mentioned in the "Bidder remark Space". If There is no deviation vendor should indicate "No Deviation".	
3	Shall confirm to Technical Specifications	

Sign and Seal of Authorized person

CAUTION: THIS DRAWING IS OUR SOLE PROPERTY AND SHOULD NOT BE USED IN ANY FORM FOR ANY PURPOSE WITHOUT THE WRITTEN PERMISSION OF BHARAT HEAVY ELECTRICALS LIMITTED TRICHIRAPPALLI - 620 014.

ALL DIMENSIONS ARE IN MM

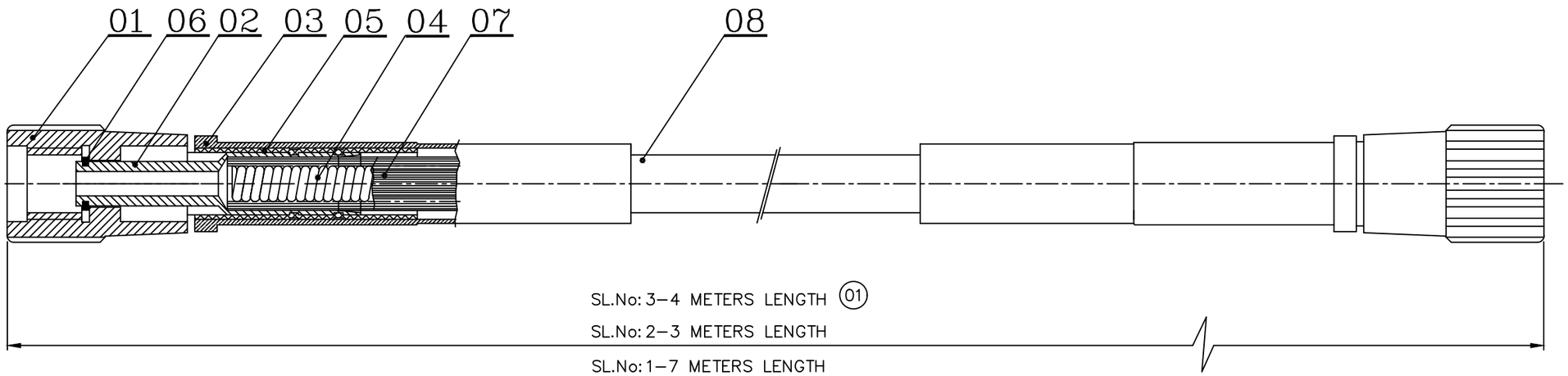

	No.of Pieces	DESCRIPTION	MATERIAL	STANDARD	NET.WT.IN KGS.	DRAWING No.	ITEM No.
	1	RUBBER HOSE	RUBBER				08
	23	SS WIRE BRAIDEDø1–219(18 SWG)	SS				07
	2	LOCKING RING ID.8xOD.13x1.5t	PCu.Sn.7	IS: 28			06
(02)	2	COPPER BUSH ID.13xOD.16x35 L	(ETP COPPER)	IS: 191			05
	1	WIRE GUIDE ID.5.5xOD 8	En.48A	BS: 970			04
	2	RUBBER SLEEVE	RUBBER			4M10A6129180	03
	2	NIPPLE	45 C8	IS: 7283	0.10	4M10A6129178	02
	2	ADOPTOR	BAKLITE			4M10A6129179	01

REFERENCE:

ALTERATIONS:	DCN REF	DATE	SIGN.	INDEX
LENGTH DIMN.ADDED		20.03.15'	G.G.RAJ	01
TOTAL LENGTH DIM.ADDED&ITEM NO.05 DIM.CORRECTED		07.09.26'	SSM	02

SCALE			
1:1	DRN.	P.ALBET ROSS	
	CHD.	R.RAMAMOORTHY	
	APP.	C.S.JAYASHEELAN	
	DATE	19–01–12	

MACHINE: 20 TORCH PANEL PROCESSING WELDING

TYPE: KKK

TITLE:

FLEXIBLE CONDUIT CABLE

(DRUM TO TOP TORCH)

DRAWING No: 3M10A6114849 REV. 02

Sheet No: No.of Sheets:

MACHINE: 20 TORCH PANEL PROCESSING WELDING	TYPE: KKK				
TITLE: ADOPTOR (FLEXIBLE CONDUIT CABLE)	DRAWING No: 4M10A61291790				REV. 01
	Sheet No:			No.of Sheets:	

Adaptor Material details:

BAKLITE

(OR)

Suitable material considering Flexible conduit cable application at production shop for feeding continuous welding consumable wire from a bulk drum pack through a guiding cone to the welding machine's wire feeder.

CAUTION: THIS DRAWING IS OUR SOLE PROPERTY AND SHOULD NOT BE USED IN ANY FORM FOR ANY PURPOSE WITHOUT THE WRITTEN PERMISSION OF BHARAT HEAVY ELECTRICALS LIMITED

ALL DIMENSIONS ARE IN MM

1.6

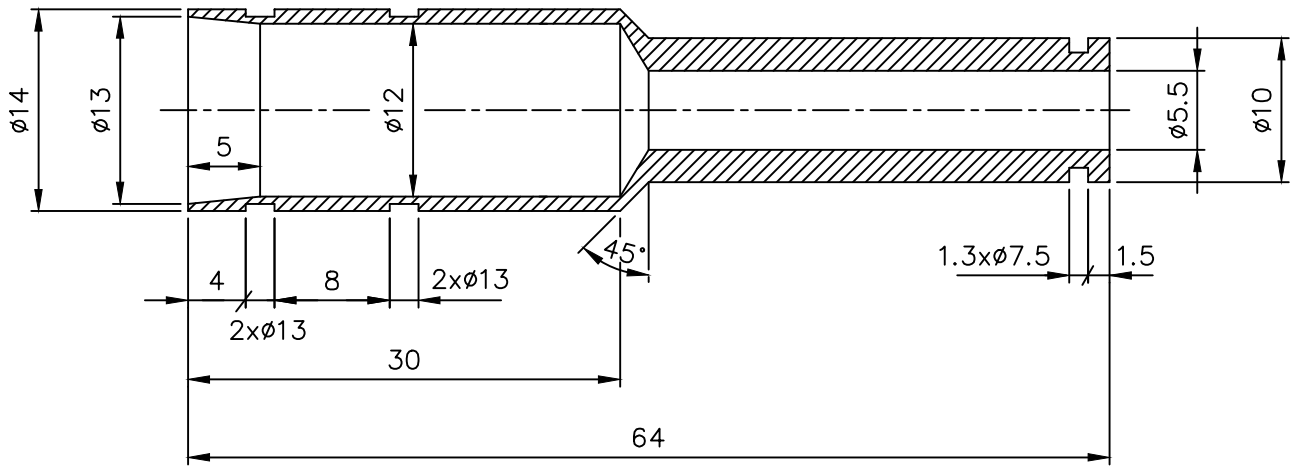

NOTE:–

01. AVOID SHARP CORNERS

02. FULLEY GALVANIZED

No.of Pieces	DESCRIPTION	MATERIAL	STANDARD	NET.WT.IN KGS.	DRAWING No.	ITEM No.
	ø14x64 L	45 C8	IS: 7283	0.05	3M10A6114849	02

REFERENCE:	ALTERATIONS:	DCN REF	DATE	SIGN.	INDEX

SCALE			
2:1	DRN.	P.ALBET ROSS	
	CHD.	R.RAMAMOORTHY	
	APP.	C.S.JAYASHEELAN	
	DATE	20–01–12	

MACHINE: 20 TORCH PANEL PROCESSING WELDING

TYPE: KKK

TITLE:

NIPPLE

(FLEXIBLE CONDUIT CABLE)

DRAWING No: 4M10A6129178

Sheet No:

No.of Sheets:

REV.

CAUTION: THIS DRAWING IS OUR SOLE PROPERTY AND SHOULD NOT BE USED IN ANY FORM FOR ANY PURPOSE WITHOUT THE WRITTEN PERMISSION OF BHARAT HEAVY ELECTRICALS LIMITED

ALL DIMENSIONS ARE IN MM

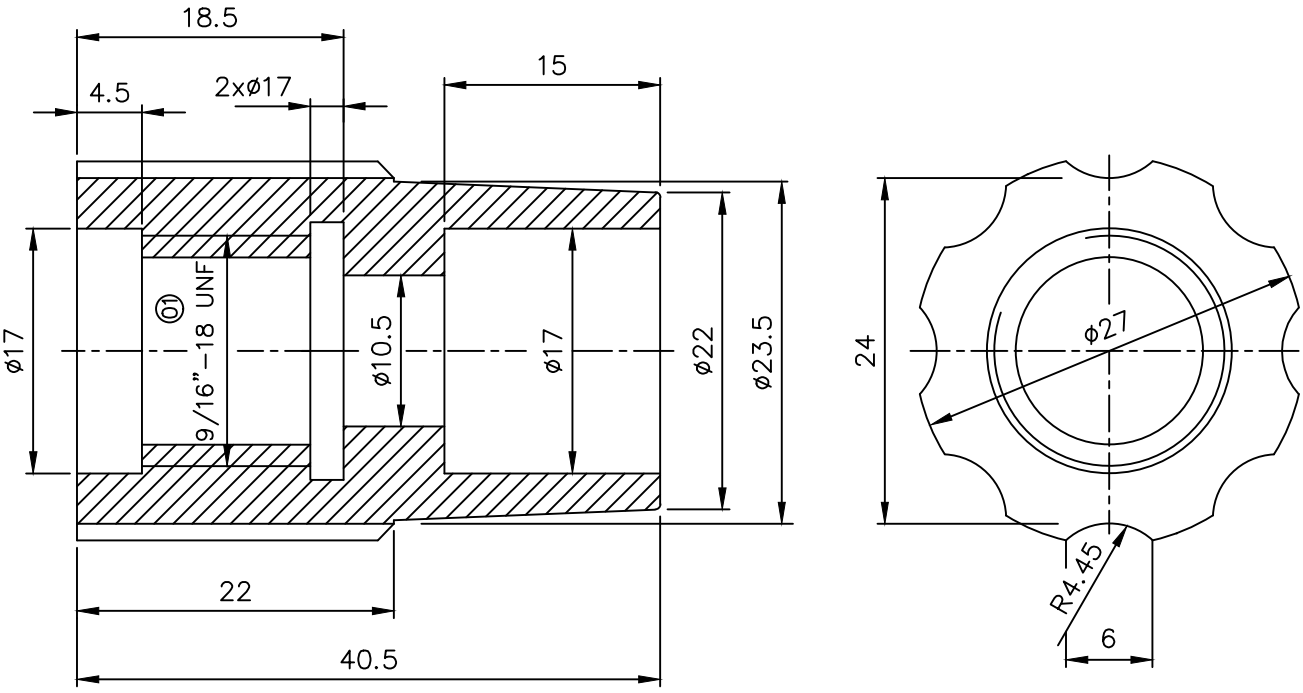

NOTE:–

AVOID SHARP CORNERS

		BAKLITE			3M10A6114849			01
No.of Pieces	DESCRIPTION	MATERIAL	STANDARD	NET.WT.IN KGS.	DRAWING No.			ITEM No.
	REFERENCE:		ALTERATIONS:	DCN REF	DATE	SIGN.		INDEX
			THRED WAS M16		21.03.12'	CSJ		01
SCALE	DRN.	P.ALBET ROSS						
2:1	CHD.	R.RAMAMOORTHY						
	APP.	C.S.JAYASHEELAN						
	DATE	20–01–12						

MACHINE: 20 TORCH PANEL PROCESSING WELDING

TYPE: KKK

TITLE:

ADOPTOR

(FLEXIBLE CONDUIT CABLE)

DRAWING No: 4M10A6129179

REV. 01

Sheet No:

No.of Sheets:

CAUTION: THIS DRAWING IS OUR SOLE PROPERTY AND SHOULD NOT BE USED IN ANY FORM FOR ANY PURPOSE WITHOUT THE WRITTEN PERMISSION OF BHARAT HEAVY ELECTRICALS LIMITTED

ALL DIMENSIONS ARE IN MM

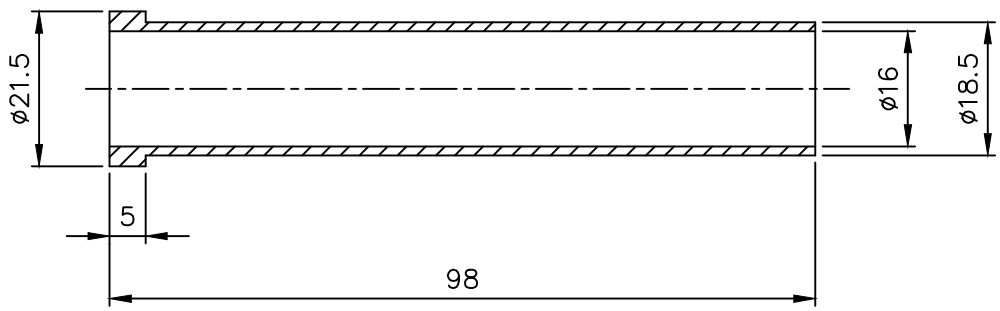

No.of Pieces	DESCRIPTION	MATERIAL	STANDARD	NET.WT.IN KGS.	DRAWING No.	ITEM No.
		RUBBER			3M10A6114849	03

REFERENCE:

ALTERATIONS:	DCN REF	DATE	SIGN.	INDEX

SCALE						
1:2	DRN.	P.ALBET ROSS				
	CHD.	R.RAMAMOORTHY				
	APP.	C.S.JAYASHEELAN				
	DATE	20-01-12				

MACHINE: 20 TORCH PANEL PROCESSING WELDING

TYPE: KKK

TITLE:

RUBBER SLEEVE

ID.16xOD.21.5x98 L
(FLEXIBLE CONDUIT CABLE)

DRAWING No: 4M10A61291 80

Sheet No:

No.of Sheets:

REV.

Annexure – A- Special Conditions for GeM Enquiry

The terms and condition mentioned in this document are applicable in addition to the Buyer Added Bid Specific Additional Terms & Conditions and GeM General Terms and Conditions. Bidders shall furnish pointwise confirmation/details.

To be filled by bidder	
Description of the item/Equipment:	
GeM Tender No. & Date	
Name of the firm (Bidder)	**:**
Address	**:**
Contact person 1 **Name:** **Designation:** **Office Phone:** **Mobile:** **e-mail:**	**Contact person 2** **Name:** **Designation:** **Office Phone:** **Mobile:** **e-mail:**

Sl	**Terms and conditions/Details required**				**Vendor's confirmation**
1.	Indicate the MSME status of the bidder. MICRO/SMALL/MEDIUM/Non-MSME (**Udyam certificate is to be uploaded in proof of above**).				
2.	Any Bidder falling under **MSE** category shall furnish the following details & submit documentary evidence/ Govt. Certificate etc. in support of the same along with their offer.				
	Type under MSE	**SC/ST Owned**	**Women Owned**	**Others (excluding SC/ST & Women Owned)**	
	Micro				
	SMALL				
	Note: If the bidder does not furnish the above in the tender, offer shall be processed construing that the bidder is not falling under MSE category.				
3.	Payment terms shall be as per clause 9 of Buyer Added Bid Specific Additional Terms & Conditions for this tender. Confirm your acceptance for the payment terms relevance to your MSME status indicated above. Note: If it is indicated as "For availing benefits of Priority Sector Lending(PSL) ONLY" in Udyam certificate, then no MSME benefit will be considered for this tender.				
4.	Liquidated Damages shall be as per clause 18 of Buyer Added Bid Specific Additional Terms & Conditions. Confirm your acceptance.				

5.	Offers from Indigenous supplier will be considered only if they have a valid GST registration certificate. **Please Indicate the GST registration number**. If any specific exemption is available, a declaration with due supporting documents need to be furnished for considering the offer.	GST No._____
6.	**Performance Bank Guarantee:** Not Applicable	
7.	HSN Code for the quoted items	HSN CODE : _____
8.	Rate quoted in GeM portal should be on FOR destination basis inclusive of all taxes, P&F, freight etc. Transit Insurance is under Supplier scope. **Please indicate how much GST percentage is included in quoted price.**	GST in %:____
9.	Technical (Specification, brand, etc.) and commercial terms agreed against BHEL clarifications during the techno-commercial evaluation stage should also be honoured by the bidder, even if they aren't explicitly part of the final GeM contract. The rationale behind this is that such agreements influence the final decision and are not captured by GeM in to the GeM contract. **Please confirm your acceptance**.	
10.	All the terms and conditions in Buyer Added Bid Specific Additional Terms & Conditions of this tender are read, understood and agreed by the vendor without any deviation. **Vendor to confirm**.	
11.	Duly filled, signed and stamped copies of the annexures as indicated in clause 31 of Buyer Added Bid Specific Additional Terms & Conditions of the enquiry are to be provided in the **letter head** of the Supplier. Please fill the annexures with GeM enquiry number, Item description and your company name wherever required. Also please Tick the appropriate option wherever required.	
12.	There will not be any RA (Reverse Auction). Hence suppliers to quote their best price while submitting their offer itself.	

Vendor’s Seal & Signature

ANNEXURE- 1

CHECK LIST

NOTE: - Suppliers are required to fill in the following details in their Letterhead and no column should be left blank

A	**Name and Address of the Supplier**	
B	**GSTN No. the Supplier (Place of Execution of Contract / Purchase Order)**	
C	**Details of Contact person for this Tender**	Name: Mr./ Ms. Designation: Telephone No: Mobile No: Email ID:
D	**EMD DETAILS**	**Not applicable**

E	**DESCRIPTION**	**APPLICABILITY (BY BHEL)**	**ENCLOSED BY BIDDER**
i.	Whether **Pre - Qualification Criteria** is understood and provided proper supporting documents.	**Applicable**/ ~~Not Applicable~~	YES / NO
ii.	Whether all pages of the Tender documents including annexures, appendices etc are read and understood	**Applicable**/ ~~Not Applicable~~	YES / NO
iii.	Audited Balance Sheet and profit & Loss Account for the last three years	~~Applicable/~~ **Not Applicable**	YES / NO
iv.	Copy of PAN Card & GST registration	**Applicable**/ ~~Not Applicable~~	YES / NO
v.	Submission of **Udyam certificate** as specified in Tender (applicable in case of MSME supplier)	**Applicable**/ ~~Not Applicable~~	YES / NO
vi.	**Offer forwarding letter** / tender submission letter as per Annexure – 2	~~Applicable/~~ **Not Applicable**	YES / NO
vii.	Submission of **Certificate of No Deviation** as per Annexure – 3	**Applicable**/ ~~Not Applicable~~	YES / NO
viii.	Declaration regarding **Insolvency/ Liquidation/ Bankruptcy Proceedings** as per Annexure – 4	**Applicable**/ ~~Not Applicable~~	YES / NO
ix.	Declaration by **Authorized Signatory** as per Annexure – 5	~~Applicable/~~ **Not Applicable**	YES / NO
x.	Declaration by **Authorized Signatory regarding Authenticity** of submitted Documents Annexure – 6	**Applicable**/ ~~Not Applicable~~	YES / NO
xi.	Submission of **Non-Disclosure Certificate** as per Annexure – 7	**Applicable**/ ~~Not Applicable~~	YES / NO
xii.	Submission of **Integrity Pact** as specified in Tender as per Annexure – 8	~~Applicable/~~ **Not Applicable**	YES / NO
xiii.	Declaration **confirming knowledge about Site Conditions** as per Annexure – 9	~~Applicable/~~ **Not Applicable**	YES / NO

xiv.	Declaration reg. **Related Firms & their areas of Activities** as per Annexure – 10	**Applicable**/ ~~Not Applicable~~	YES / NO
xv.	Declaration for **relation in BHEL** as per Annexure – 11	**Applicable**~~/ Not Applicable~~	YES / NO
xvi.	Declaration reg. **minimum local content** in line with revised public procurement as per Annexure – 12	~~Applicable/~~ **Not Applicable**	YES / NO
xvii.	Declaration regarding **compliance to Restrictions under Rule 144 (xi) of GFR 2017** as per Annexure – 13	**Applicable**~~/ Not Applicable~~	YES / NO
xviii.	**Bank Account Details** for E-Payment as per Annexure – 14	~~Applicable/~~ **Not Applicable**	YES / NO
xix.	**Power of Attorney** for submission of tender as per Annexure – 15	~~Applicable/~~ **Not Applicable**	YES / NO
xx.	**Proforma of Bank Guarantee for Earnest Money** as per Annexure – 16	~~Applicable/~~ **Not Applicable**	YES / NO
xxi.	**Treatment of cases regarding conflict of interest** as per Annexure – 20	**Applicable**~~/ Not Applicable~~	YES / NO

NOTE: Strike off 'YES' or 'NO', as applicable. Tender not accompanied by the prescribed **above applicable documents** are liable to be summarily rejected.

DATE:

Sign. of the AUTHORISED SIGNATORY
(With Name, Designation and Company seal)

ANNEXURE- 3

CERTIFICATE OF NO DEVIATION

(To be Typed & submitted in the Letter Head of the Company/Firm of Bidder)

To,

(Write Name & Address of Officer of BHEL inviting the Tender)

Dear Sir,

Subject: **No Deviation Certificate**

Ref: 1) GeM Bid No: ……

2) All other pertinent issues till date

We hereby confirm that we have not changed/ modified/materially altered any of the tender documents as downloaded from the website/ issued by BHEL and in case of such observance at any stage, it shall be treated as null and void.

We also hereby confirm that we have neither set any Terms and Conditions and nor have we taken any deviation from the Tender conditions together with other references applicable for the above referred GeM Bid.

We further confirm our unqualified acceptance to all Terms and Conditions, unqualified compliance to Tender Conditions.

We confirm to have submitted offer in accordance with tender instructions and as per aforesaid references.

Thanking you,

Yours faithfully,

(Signature, date & seal of authorized representative of the bidder)

Date:

Place:

ANNEXURE- 4

UNDERTAKING

(To be typed and submitted in the Letter Head of the Company/Firm of Bidder)

To,

(Write Name & Address of Officer of BHEL inviting the Tender)

Dear Sir/Madam,

Sub: DECLARATION REGARDING INSOLVENCY/ LIQUIDATION/ BANKRUPTCY PROCEEDINGS

Ref: GeM Bid Specification No:

I/We, _____ declare that, I/We am/are not admitted under insolvency resolution process or liquidation under Insolvency and Bankruptcy Code, 2016, as amended from time to time or under any other law as on date, by NCLT or any adjudicating authority/authorities

Sign. of the AUTHORISED SIGNATORY
(With Name, Designation and Company seal)

Place:

Date:

ANNEXURE – 6

DECLARATION BY AUTHORISED SIGNATORY OF BIDDER

(To be typed and submitted in the Letter Head of the Company/Firm of Bidder)

To,

(Write Name & Address of Officer of BHEL inviting the Tender)

Dear Sir,

Sub: **Declaration by Authorised Signatory regarding Authenticity of submitted documents.**

Ref: 1) GeM Bid No. & Date: …….

2) All other pertinent issues till date

I/We, hereby certify that all the documents submitted by us in support of possession of "Qualifying Requirements" are true copies of the original and are fully compliant required for qualifying / applying in the bid and shall produce the original of same as and when required by Bharat Heavy Electricals Limited.

I / We hereby further confirm that no tampering is done with documents submitted in support of our qualification as bidder. I / We understand that at any stage (during bidding process or while executing the awarded contract) if it is found that fake / false / forged bid qualifying / supporting documents / certificates were submitted, it would lead to summarily rejection of our bid / termination of contract. BHEL shall be at liberty to initiate other appropriate actions as per the terms of the Bid / Contract and other extant policies of Bharat Heavy Electricals Limited.

Yours faithfully,

(Signature, Date & Seal of Authorized Signatory of the Bidder)

Date:

ANNEXURE- 7

NON-DISCLOSURE CERTIFICATE

(To be Typed & submitted in the Letter Head of the Company/Firm of Bidder)

I/We understand that BHEL, Trichy is committed to Information Security Management System as per their Information Security Policy.

Hence, I/We M/s …… who are submitting offer for providing Supply/services to BHEL, Trichy against GeM Bid No…… hereby undertake to comply with the following in line with Information Security Policy of BHEL, Trichy.

- To maintain confidentiality of documents & information which shall be used during the execution of the Contract.
- The documents & information shall not be revealed to or shared with third party which shall not be in the business interest of BHEL, Trichy.

(Signature, date & seal of Authorized Signatory of the bidder)

Date:

ANNEXURE – 10

DECLARATION

Date: _____

To,

(Write Name & Address of Officer of BHEL inviting the Tender)

Dear Sir/ Madam,

Sub: **Details of related firms and their area of activities**

Please find below details of firms owned by our family members that are doing business/ registered for same item with BHEL, _____ (NA, *if not applicable*)

1	Material Category/ Work Description	
	Name of Firm	
	Address of Firm	
	Nature of Business	
	Name of Family Member	
	Relationship	
2	Material Category/ Work Description	
	Name of Firm	
	Address of Firm	
	Nature of Business	
	Name of Family Member	
	Relationship	
…		

Note: ***I certify that the above information is true and I agree for penal action from BHEL in case any of the above information furnished is found to be false.***

Regards,

(_____)

From: M/s

Supplier Code:

Address:

ANNEXURE – 11

DECLARATION FOR RELATION IN BHEL

(To be typed and submitted in the Letter Head of the Company/Firm of Bidder failing which the offer of Bidder is liable to be summarily rejected)

To,

(Write Name & Address of Officer of BHEL inviting the Tender)

Dear Sir,

Sub: Declaration for relation in BHEL
Ref: 1) GeM Bid Specification No: ……

I/We hereby submit the following information pertaining to relation/relatives of Proprietor/Partner(s)/ Director(s) employed in BHEL

Tick (√) any one as applicable:

1. The Proprietor, Partner(s), Director(s) of our Company/Firm DO NOT have any relation or relatives employed in BHEL

OR

2. The Proprietor, Partner(s), or Director(s) of our Company/Firm HAVE relation/relatives employed in BHEL and their particulars are as below:

   i.

   ii.

(Signature, Date & Seal of Authorized Signatory of the Bidder)

Note:

1. Attach separate sheet, if necessary.
2. If BHEL Management comes to know at a later date that the information furnished by the Bidder is false, BHEL reserves the right to take suitable against the Bidder/Contractor.

ANNEXURE – 13

DECLARATION REGARDING COMPLIANCE TO RESTRICTIONS UNDER RULE 144 (xi) OF GFR 2017

(To be typed and submitted in the Letter Head of the Entity/ Firm providing certificate as applicable)

To,

(Write Name & Address of Officer of BHEL inviting the Tender)

Dear Sir,

Sub: Declaration regarding compliance to Restrictions under Rule 144 (xi) of GFR 2017

Ref: 1) GeM Bid Specification No: ……
2) All other pertinent issues till date

I have read the clause regarding restrictions on procurement from a bidder of a country which shares a land border with India. I certify that _____ (**SPECIFY THE NAME OF THE ORGANIZATION HERE**), is not from such a country/ has been registered with the Competent Authority (*attach valid registration by the Competent Authority, i.e., the Registration Committee constituted by the Dept. for Promotion of Industry and Internal Trade (DPIIT*).

I hereby certify that we fulfil all requirements in this regard and is eligible to be considered.

Thanking you,

Yours faithfully,

(Signature, Date & Seal of Authorized Signatory of the Bidder)

Note: Bidders to note that in case above certification given by a bidder, whose bid is accepted, is found to be false, then this would be a ground for immediate termination and for taking further action in accordance with law and as per BHEL guidelines.

ANNEXURE 20

TREATMENT OF CASES REGARDING CONFLICT OF INTEREST

The bidder notes that a conflict of interest would said to have occurred in the tender process and execution of the resultant contract, in case of any of the following situations:

i) If its personnel have a close personal, financial, or business relationship with any personnel of BHEL who are directly or indirectly related to the procurement or execution process of the contract, which can affect the decision of BHEL directly or indirectly;

ii) The bidder (or his allied firm) provided services for the need assessment/ procurement planning of the Tender process in which it is participating;

iii) Procurement of goods directly from the manufacturers/ suppliers shall be preferred. However, if the OEM/Principal insists on engaging the services of an agent, such agent shall not be allowed to represent more than one manufacturer/ supplier in the same tender. Moreover, either the agent could bid on behalf of the manufacturer/ supplier or the manufacturer/ supplier could bid directly but not both. In case bids are received from both the manufacturer/ supplier and the agent, bid received from the agent shall be ignored. However, this shall not debar more than one Authorised distributor (with/ or without the OEM) from quoting equipment manufactured by an Original Equipment Manufacturer (OEM) in procurements under a Proprietary Article Certificate.

iv) A bidder participates in more than one bid in this tender process. Participation in any capacity by a Bidder (including the participation of a Bidder as a partner/ JV member or sub-contractor in another bid or vice-versa) in more than one bid shall result in the disqualification of all bids in which he is a party. However, this does not limit the participation of an entity as a sub-contractor in more than one bid if he is not bidding independently in his own name or as a member of a JV.

The Bidder declares that they have read and understood the above aspects, and the bidder confirms that such conflict of interest does not exist and undertakes that they will not enter into any illegal or undisclosed agreement or understanding, whether formal or informal with other Bidder(s), in this regard. This applies in particular to prices, specifications, certifications, subsidiary contracts, submission or non-submission of bids or any other actions to restrict competitiveness or to introduce cartelization in the bidding process. **In case, the Bidder is found having indulged in above activities, the same will be considered as a violation of the tender conditions, and suitab1e action shall be taken by BHEL as per extant policies/ guidelines.**

(Signature, Date & Seal of Authorized
Signatory of the Bidder)