REQUEST FOR QUOTATION

MMI:PU:RF:003

BHARAT HEAVY ELECTRICALS LIMITED
Electronics Division
PB No. 2606, Mysore Road Bangalore - 560026
INDIA

RFQ NUMBER:
SLNMM90099

RFQ DATE :
16.AUG.2010

Due Date
13.SEP.2010
Time: 13:00 HRS

VENUE :
NEW ENGG. BLDG

(for all correspondence)
Purchase Executive : NITYANAND SLV
Phone : 00918026998483
Fax : 00918026989217
E-mail: nitya@bheledn.co.in

Please submit your lowest quotation subject to our terms and conditions attached for the material mentioned below. The quotation must be enclosed in a sealed envelope / Fax superscribed with RFQ no.and due date, should reach us on or before the due date by **13.00** hours IST and will be opened on the same day at **13.30** hours at the venue mentioned above. **PLEASE DROP THE OFFER IN THE BOX PROVIDED AT RECEPTION.**

SPECIAL TERMS AND CONDITIONS:

1.TENDER/OFFER MUST BE SUBMITTED IN TWO PARTS. A)TECHNO-COMMERCIAL BID. B) PRICE BID.

2.NON-COMPLIANCE OF BHEL STANDARD TERMS RESULTS IN LOADING OF BASIC PRICE.
3.VENDOR IS ADVISED TO GO THROUGH THE GENERAL TERMS AND CONDITIONS DOCUMENT, CPD 00 ENCLOSED WITH RFQ.
4.VENDOR HAS TO CONFIRM TO ALL THE CLAUSES LISTED IN THE TECHNO-COMMERCIAL TERMS (ANNEXURE-A FOR FOREIGN PURCHASE AND ANNEXURE-B FOR INDIGENOUS PURCHASE) OF THE DOCUMENT. DEVIATIONS, IF ANY, TO BE HIGHLIGHTED AND BROUGHT OUT CLEARLY.
5. DELIVERY REQUIRED: WITHIN 32 WEEKS FROM THE DATE OF PURCHASE ORDER.
6. TERMS OF PAYMENT:
FOR FOREIGN PURCHASE: PAYMENT WILL BE MADE AGAINST "SIGHT DRAFT" ON PRESENTATION OF DOCUMENTS TO OUR BANKERS.75% AGAINST COMPLETE DISPATCH DOCUMENTS, 15% ON SUCCESSFUL INSTALLATION, COMMISSIONING AND START-UP TRIALS & BALANCE 10% ON SUBMISSION OF PERFORMANCE BANK GUARANTEE (PBG)
FOR INDIGENOUS PURCHASE:
75% BASIC PAYMENT + 100% TAXES & DUTIES WITH 30 DAYS CREDIT, 15% BASIC AFTER THE SUCCESSFUL INSTALLATION, COMMISSIONING & START-UP TRIALS & BALANCE 10% BASIC AGAINST SUBMISSION OF PBG.

Sl No.	Description	Qty	Unit	Delivery qty	Delivery Date
1	SC9890004682 Test cabinet for semiconductor devices DRW PS438333 00	1	ST	1	31.MAY.2011

Total Number of Items - 1

RFQ sent to :
Please note that the tender will be opened in the presence of the bidders or his authorised representatives (maximum two per organisation) who choose to be present with authorisation letters. Refer annexure for the terms and conditions.

Please specify Terms of delivery, Excise duty, sales tax, Ex-BHEL, Ex-works surcharge, Insurance,P&F, Freight and other taxes very clearly .

i). This is only RFQ not an order.
ii). In all correspondence quote RFQ No. & due date.
iii). In Quotation BHEL material code / RFQ Sl. No. should be mentioned clearly.
iv). Quotation Envelope / Fax not superscribed with RFQ No.and due date is liable for rejection.
v). Quotation should remain valid for a minimum peiod of 90 days from due date.
vi). In case of non-receipt of Quotation or regret letter for 3 consecutive RFQs you are liable to be removed from our vendors list.
vii). All Prices should be written in words and numbers.
viii). Excise Chapter Heading should be mentioned for all items where VAT is applicable .

For and On behalf of BHEL.

Bharat Heavy Electricals Ltd.,
(A Government of India undertaking)
Electronics Division
PB No.2606, Mysore Road, Bangalore-560026, India

Enquiry - General Terms & Conditions for Supply of CAPITAL ITEMS (Imported & Indigenous) (Two parts bid), Doc Ref: CPD-00

I. Enquiry / Request For Quotation (RFQ):

(a) Any Purchase Order resulting from this enquiry shall be governed by **these general terms and conditions listed below and special terms and conditions, if any, along with this enquiry** of Bharat Heavy Electricals Limited, Electronics Division, Bangalore-560026 (**hereinafter referred to as BHEL EDN**).

(b) Any of the terms and conditions not acceptable to supplier, shall be explicitly mentioned in the quotation. Otherwise, it will be treated as that all terms and conditions of this enquiry are acceptable.

(c) If counter terms and conditions are offered by supplier, BHEL EDN shall not be governed by such terms and conditions, unless it is agreed and incorporated in the Purchase Order of BHEL EDN.

(d) Any deviation to the terms and conditions not mentioned in the quotation by supplier in response to this enquiry will not be considered, if put forth subsequently or after issue of order, unless clarification is sought for by BHEL EDN and agreed upon in the Purchase Order of BHEL EDN.

(e) BHEL EDN reserves the right to adopt Reverse Auction for the enquiry sent, at its discretion.

(f) BHEL EDN shall be at liberty to cancel the tender at any time, before ordering, without assigning any reason.

II. General Terms and conditions:

1. TWO PARTS BID: Quotation shall be submitted in two parts bid i.e.

(a) Techno-commercial i.e., Un-priced Bid:

Techno-commercial bid shall be submitted with complete description of the equipment, specification compliances to the enquired specification and all the commercial terms & conditions indicated in the **COMMERCIAL TERMS (**ANNEXURE - A / ANNEXURE - B). Any other enclosure, which the supplier wishes to submit like product catalogue, technical literature etc., may also be submitted in a sealed envelope super scribed clearly as **"TECHNO-COMMERCIAL BID" with RFQ No. and DUE DATE.** Un-priced copy of price bid (without price) shall also be enclosed with the techno-commercial bid.

Confirmation to BHEL specifications shall be indicated by the vendor in the respective columns provided in the purchase specification wherever applicable. Deviations to the specification /

item description, if any shall be brought out clearly indicating "DEVIATION TO BHEL SPECIFICATION" without fail as a part of technical offer.

Compliance to Pre-qualification criteria (if applicable) shall also be enclosed with the Techno-commercial bid.

Manufacturer's name, their trade mark and brand, part number, alternate material to the one asked in enquiry, if any, should be mentioned in quotation and illustrative leaflets giving technical particulars etc. are to be attached to facilitate consideration and technical evaluation of the quotation.

BHEL EDN material code number (as in enquiry) shall be indicated for each item quoted.

(b) <u>Price Bid:</u>

Price bid should contain basic unit prices, discount if any, applicable taxes & duties, packing & forwarding charges (if applicable), Freight & insurances (if applicable) FOB charge (if applicable) etc., in a sealed envelope super scribed clearly as **"PRICE BID" with RFQ No. and DUE DATE.** Installation, commissioning, start-up and training charges (if any) shall also be indicated in the price bid.

It is preferred to indicate the rates in both figures and words. In such case, if there is difference / discrepancy between the rates in figures and words, the **least of the two** rates will be considered.

Both these sealed envelopes [(a) Techno-commercial i.e., un-priced Bid and (b) Price Bids] shall be kept in a single sealed envelope and super scribed clearly with **RFQ No. and DUE DATE.**

2. The above sealed envelope (Tender) shall reach our office on or before the due date by **13:00 hrs.** Quotations are to be dropped in the tender box marked for the OPENING ON respective days i.e., MONDAY / WEDNESDAY / FRIDAY kept at BHEL-EDN's Reception area of our works with caption "CE, M&C, SC&PV, TSC, DEFENCE, TELECOM, CPD". Quotations also can be dispatched by Couriers / Registered post / FAX / e mail to the Purchase Executive indicated in the RFQ.

Quotation through fax / email when addressed to the specific fax number and email address given in the enquiry, to be sent well in advance to enable BHEL EDN purchase personnel to drop in the tender box before the scheduled opening date and time. **Supplier is fully responsible for lack of secrecy on information of such quotations.**

BHEL EDN is not responsible for any delay in receipt of quotation sent by supplier through post / fax / email.

Late Tenders i.e., Tenders received after due date will be rejected.

3. The rate quoted against each item shall be in units stated in the enquiry. Where quotation is in terms of unit other than that in enquiry, relationship between the two units must be furnished in the quotation.

4. As far as possible, the quotations shall be free from corrections / overwriting. Corrections / overwriting, if any should be signed by authorized person with the company seal. Any typographical errors, totaling mistakes, currency mistakes, multiplication mistakes, summary mistakes observed in your priced bids, BHEL may consider whichever is beneficial to BHEL for evaluation.

5. Quotations are to be duly signed. Unsigned bids / offers are liable for rejection.

6. Tenders will be opened at **13:30 hrs.** & the venue is New Engg., Bldg., 2nd floor, MM conference hall. All the tenderers or their authorized representatives (with authorization letter from their principals) may witness opening of techno-commercial bid on the due date.

7. After evaluation of techno-commercial bids, price bids of only those which are technically & commercially accepted, will be opened on a subsequent date, which will be intimated to the concerned in advance for witnessing of price bid opening.

8. The quantity in each item to be purchased may vary from quantity enquired according to the actual requirement at the time of placing the purchase order. Quantity discount, if any, should be mentioned in the quotation.

9. BIDDERS (for indigenous purchase) shall indicate clearly Excise duty, Education Cess, Sales Tax/VAT, Octroi, Exit/Entry tax, Service Tax as applicable for the quoted items. In the absence of clarity of these, any claim at a later date will not be entertained. Any changes in Taxes and duties after award of the contract will not be considered except such are those, which are imposed by Govt., notification within the contractual delivery. Seeking price amendments for change in Excise duty due to crossing of turnover limits will not be considered under any circumstances.

10. **DUN & BRADSTREET REPORT (for Foreign purchase):**

In case of foreign vendors, the vendors should obtain a report from Dun & Bradstreet or equivalent and submit a copy of the report with their Duns number mentioned along with the technical offer. Offer without this report is liable for rejection.

11. **Payment of Agency Commission to Indian Agent (for Foreign purchase):**

The seller confirms and declares to the Buyer that the seller is the original manufacturer of the stores referred to in this contract and has not engaged any individual or firm, whether Indian or Foreign whatsoever, to intercede, facilitate or in any way to recommend to the Government of India or any of its functionaries, whether officially or unofficially, to the award of the contract to the seller; nor has any amount been paid, promised or intended to be paid to any such individual or firm in respect of any such intercession, facilitation or recommendation. The seller agrees that if it is any way incorrect or if at a later stage it is discovered by the Buyer that the seller has engaged any such individual/ firm, and paid or intended to pay any amount, gift, reward, fees, commission or consideration to such person, party, firm or institution, whether before or after the signing of this contract, the seller will be liable to refund that amount to the Buyer. The seller will also be debarred from entering into any supply contract with the Government of India for a minimum period of five years. The Buyer will also have a right to consider cancellation of the contract either wholly or in part, without any entitlement or compensation to the seller who shall in such event be liable to refund all payments made by the

buyer in terms of the contract along with interest at the rate of 2% per annum above the LIBOR rate. The Buyer will also have the right to recover any such amount from any contracts concluded earlier with the Govt. of India

BHEL would like to procure the above item directly from you and not to involve services of Indian Agent for the procurement. The quotation submitted by your Indian Agent is not acceptable and liable to be rejected. However, in case you would like to involve your Indian Agent for supply of the items/service therefore you may furnish the following information along with the Techno Commercial bid.

(a) Registration status of Indian Agent with DGS&D and BHEL.

(b) Commission payable to Indian Agent and percentage.

(c) Currency in which payable to Indian Agent.

(d) If the agency commission is payable by the foreign principal/OEM, such commission shall be received by Indian Agent through inward FFE remittance through banking channels and disbursed in rupees only.

(e) Tax at source deduction is applicable to the Agency Commission paid to the Indian Agent as per the prevailing rules.

(f) If the respective Indian Agents are not registered with DGS&D or BHEL, are required to register their names with BHEL by providing the following information's for registration.

    (i) Name of the foreign firm / original equipment manufacturer represented by the Indian representative / Indian Agent.

    (ii) Agency agreement.

    (iii) PAN No, Name, Address of Bankers in India and Abroad.

    (iv) Nature of services to be rendered by Indian Agent / Indian representative and percentage of commission payable to Indian Agent / Indian representative by Principal / original equipment manufacturer.

(g) All particulars relating to Agency Commission will be reported to the enforcement Directorate of Income Tax Department.

(h) Undertaking to be submitted by Indian Representative / Agent that the agency commission would be accepted in Indian Rupees only and through inward FFG remittance through banking channel for the services rendered towards the execution of the orders.

12. <u>TOTAL COST TO BHEL:</u> Purchase order will be placed on the lowest quotation (L1) only among the technically & commercially accepted quotations. Lowest quotation (L1) is determined on the basis of the total cost to BHEL.

(a) FOR FOREIGN PURCHASE:

Total cost to BHEL = Total basic value in foreign currency + FOB charges (if any) + Packing & Forwarding charges (if any) + Cost Insurance Freight (CIF) + Basic Custom Duty (BCD) + Counter Veiling Duty (CVD) + Educational Cess + Special Additional Duty (SAD) + Entry TAX + Service TAX (if applicable) + Loading factors for deviations to commercial terms & conditions.
Note: Exchange rate ruling on the date of Tender opening (Techno-commercial / un-priced Bid) will be considered for converting foreign currency to Indian currency. Exchange rates published in Economic Times (TT selling) will be considered.

No import license will be given by BHEL EDN unless otherwise specifically stated.

(b) FOR INDIGENOUS PURCHASE:

Total cost to BHEL = Total basic value + Packing & forwarding charges + Excise duty + Education cess + sales Tax/VAT + Octroi + Exit/Entry tax + Freight & Insurance + Service Tax (if applicable) + Loading factors for deviations to commercial terms & conditions.

13. FIRM PRICE: Rates quoted should be firm and no enhancement in the rates and changes in the techno-commercial terms will be allowed once the quotation is accepted and order is placed.

If Installation & Commissioning is in supplier's scope, then the price shall remain FIRM till commissioning & handing over of the complete system.

14. TERMS OF PAYMENT:

(a) FOR FOREIGN PURCHASE:

Payment will be made against **"SIGHT DRAFT"** on presentation of documents to our bankers. Payment through LC is also made subject to loading factors as per **Clause 27 (Ai).**
The payment terms are as follows:

(i) 100% against complete dispatch documents i.e. AWB / BOL, Invoice, Packing list, Warranty certificate (if applicable), Nil shortage certificate, Certificate of country of origin etc., (where both commissioning & PBG are NOT applicable).

(ii) 90% against complete dispatch documents i.e. AWB / BOL, Invoice, Packing list, Warranty certificate, Nil shortage certificate, Certificate of country of origin etc., & balance 10 % on submission of Performance Bank Guarantee (PBG) (where commissioning is NOT applicable but PBG is applicable).

(iii) 75% against complete dispatch documents i.e. AWB / BOL, Invoice, Packing list, Warranty certificate, Nil shortage certificate, Certificate of country of origin etc., 15% on successful installation, commissioning and start-up trials & balance 10% on submission of Performance Bank Guarantee (PBG) (where both commissioning & PBG are applicable).

(iv) If PBG could not be submitted, vendors can also accept for the final 10% payment, payable after the warranty period + 6 months of claim period against supplementary invoice. In such cases loading for PBG is not applicable.

(b) FOR INDIGENOUS PURCHASE:

(i) 100% payment with 30 days credit (where both commissioning & PBG are NOT applicable).

(ii) 90% basic payment + 100% taxes & duties with 30 days credit & balance 10% basic against submission of PBG (where commissioning is NOT applicable but PBG is applicable).

(iii) 75% basic payment + 100% taxes & duties with 30 days credit, 15% basic after the successful installation, commissioning & start-up trials & balance 10% basic against submission of PBG (where both commissioning & PBG are applicable).

(iv) If PBG could not be submitted, vendors can also accept for the final 10% payment, payable after the warranty period + 6 months of claim period against supplementary invoice. In such cases loading for PBG is not applicable.

15. ADVANCE PAYMENT: Quotations with **"Advance payment"** or **"Inland Letter of Credit"** is liable for rejection.

16. PENALTY: Failure to supply within the delivery time as per purchase order will make the supplier liable to an unconditional **penalty of 0.5 % (half percent) per week at the basic price of the goods for the undelivered quantity, subject to a maximum of 10%.**

If pre-shipment inspection is involved, date of issue of pre-shipment call by the vendor along with test certificates / test reports / certificate of conformance / calibration reports as proof of completion will be treated as date of dispatch for the purpose of penalty calculation.

In the absence of reports stated above, actual date of inspection will be considered as date of dispatch for penalty calculation.

Date of receipt / Date of dispatch / Date of LR / Date of Airway bill / Date of pre-shipment inspection call with relevant documents as stated above, whichever is earlier shall be considered as delivery date for the purpose of penalty calculation.

17. PBG: Performance Bank Guarantee (PBG) to be submitted on Rs.100/- non-judicial stamp paper as per the BHEL prescribed format given in **ANNEXURE - E / ANNEXURE - F** for 10% of the basic equipment value obtained from any BHEL member (consortium) banks indicated in **ANNEXURE-G**.

PBG shall be valid for 12 months from the date of commissioning or 18 months from the date of dispatch whichever is earlier. The PBG shall also have 6 months claim period from the date of dispatch / commissioning.

The Bank Guarantee shall be submitted directly to the concerned Purchase Executive by the issuing Bank with their forwarding letter.

18. WARRANTY: Goods dispatched shall have warranty period of 18 months from the date of dispatch or 12 months from the date of commissioning whichever is earlier or as mentioned in the RFQ.

19. TERMS OF DELIVERY:

(a) FOR IMPORTED PURCHASE:

Price offered shall be for goods packed and delivered **F.O.B.** (named international Airport / sea port) including packing, forwarding, Handling, Ancillary charges like processing of Sight Draft, Letter of credit (L/C) if applicable, negotiation of bank documents, Export declaration, Certificate of origin etc.

Packing shall be Road / Rail / Air / Sea worthy, best suitable for transshipment and to take care of transit damages.

Wooden packing material for all the foreign consignments should be treated as per ISPM-15 & **Fumigation / Phytosanitary certificate** to be submitted to the freight forwarders / BHEL along with the invoice, AWB, packing list etc.

Vendors shall indicate the name of International Airport.

Note: Name of International Airport has to be selected from any one of the airports indicated in the table provided in **ANNEXURE – C.**

(b) FOR INDIGENOUS PURCHASE:

Equipment shall be delivered on EX-EDN/BHEL, Bangalore basis, inclusive of freight, packing & forwarding charges.

Packing shall be Road / Rail / Air / Sea worthy, best suitable for transshipment and to take care of transit damages.

It is preferred to dispatch the consignments through EDN/BHEL approved transporters indicated in **ANNEXURE - D** on Door Delivery basis.

Smaller consignments can be dispatched through Courier services / RPP with the prior approval of the purchasing Executive.

In case of ex–works dispatches, transit insurance shall be arranged by BHEL. Vendor shall intimate the dispatch details to BHEL immediately after effecting shipment, to arrange transit insurance accordingly.

20. DELIVERY REQUIREMENT: In the quotation, earliest firm delivery (number of days or weeks) by which material will be dispatched from the date of receipt of order must be indicated. It is recommended to avoid Quotations with delivery term such as `ex-stock', `subject to prior sale', or `delivery at the earliest'.

21. VALIDITY: Quotation should remain valid for a period of **90 days** from the date of technical bid opening.

22. POST-ORDER REQUISITES:

(a) Pre-shipment inspection at vendor's works, if required, will be carried out by BHEL. Required assistance will have to be provided by the vendor at the time of pre-shipment inspection.

(b) Test certificates, Calibration certificates and warranty certificates as stipulated at the time of ordering shall be furnished.

(c) Items shall be dispatched by Air/Road/Rail/Sea worthy packing. Any damage and later rejection, due to poor / improper packing shall be to supplier's account.

(d) Any damage/rejection should be made good or replaced immediately without any extra cost to BHEL.

(e) Wherever commissioning is involved, it shall be carried out by the vendor's qualified engineers. Scope of work includes installation, commissioning and start-up trials till satisfactory performance level is reached as certified by BHEL.

(f) BHEL will not be responsible for any loss, damage or injuries to vendor's personnel sustained during installation / commissioning / start-up trials. Vendor shall ensure compliance with all statutory requisites as laid down by local bodies, state & Central Government.

23. Equipment shall comply with the standard requirements of ISO 14001 & OHSAS 18001.

24. REGRET LETTER: In case any supplier is unable to quote, supplier shall send a regret letter without fail. In case of non-receipt of quotations or regret letters for three consecutive enquiries, such supplier is liable to be removed from our supplier list.

25. Any dispute arising out of this, shall be referred to the sole arbitration of Head of Dept. Materials Management of group concerned, BHEL EDN or any other officer nominated by him and his award shall be final and binding on the parties. The venue of the arbitration in all cases shall be Bangalore.

26. Any legal suit in respect of this enquiry lies in the court of Jurisdiction of Bangalore (India) only.

27. LOADING FACTORS:

Loading factors as detailed below will be added to the quoted price (basic) to evaluate the lowest quote for non compliance of BHEL standard commercial terms.

A(i). For non compliance of standard Terms of payment (For Foreign Purchase Orders)

Sl. No.	BHEL standard term	If you quote	Loading factor in % for non-compliance
1	100% against "SIGHT DRAFT" on presentation of dispatch documents to our Bankers.	Payment through Letter of Credit (LC)	10 % x Percentage quoted through LC
2	90% against "SIGHT DRAFT" + 10% against PBG (wherever PBG is involved)	Payment through Letter of Credit (LC)	10 % x Percentage quoted through LC
3	75% against "SIGHT DRAFT" + 15% after commissioning + 10% against PBG (wherever comm. & PBG are involved)	Payment through Letter of Credit (LC)	10 % x Percentage quoted through LC

A(ii). For non compliance of standard Terms of payment (For Indigenous Purchase Orders)

Sl. No.	BHEL standard term	If you quote	Loading factor in % for non-compliance
1	100% payment with 30 days credit	Payment through bank	10 % x percentage quoted through bank / proforma invoice
		Payment against proforma invoice	
2	90% basic payment + 100% taxes & duties with 30 days credit + 10% against submission of PBG (wherever PBG is involved)	Payment through bank	10 % x percentage quoted through bank / proforma invoice
		Payment against proforma invoice	
		100% with 30 days credit & submission of PBG	Nil
3	75% basic payment + 100% taxes & duties with 30 days credit + 15% after commissioning + 10% against submission of PBG (wherever commissioning & PBG is involved)	Payment through bank	10 % x percentage quoted through bank / proforma invoice
		Payment against proforma invoice	
		100% with 30 days credit and after commissioning & PBG	Nil

B. ***For non compliance of Penalty clause for delayed delivery*:**

Sl. No.	BHEL standard term	If you quote	Loading factor for non-compliance
1	Penalty of 0.5% per week subject to max. of 10% on the basic value of the items not supplied /delayed	Not agreed.	10 %
		5% max., agreed.	5%
		Other than the above.	10% - (minus) agreed max. %

C. For non compliance of Performance Bank Guarantee (PBG):

Sl. No.	BHEL standard term	If you quote	Loading factor for non-compliance
1	PBG for 10% of the basic material cost shall be furnished in the BHEL prescribed format.	Not agreed.	10 %
		5% agreed.	5 %
		Other than the above.	10% - (minus) agreed max. %

D. For non compliance of Warranty:

Sl. No.	BHEL standard term	If you quote	Loading factor for non-compliance
1	18 months from the date of dispatch or 12 months from the date of commissioning whichever is earlier or as indicated in the RFQ	Not agreed.	6%
		Less than 12 months or as indicated in the RFQ	0.5 % per month for the difference in period

E(i). For Non- agreement on delivery at BHEL-EDN (For Foreign Purchase Orders):

Sl. No.	BHEL standard term	If you quote	Loading factor for non-compliance
1	FOB / CIF to nearest international Airport/Seaport	Not agreed for the standard term of delivery	10 %

E (ii). For Non- agreement on delivery at BHEL-EDN (For Indigenous Purchase Orders):

Sl. No.	BHEL standard term	If you quote	Loading factor for non-compliance
1	Ex-EDN/BHEL, Bangalore (Free delivery to EDN/BHEL Bangalore including freight, packing & forwarding charges)	Not agreed for the standard term of delivery	10 %

ANNEXURE - A

COMMERCIAL TERMS (to be enclosed with TECHNO-COMMERCIAL BID)

(for Foreign Purchase Orders)

Sl. No.	Particulars	Bidder's confirmation
1	**Price basis:** Firm i.e., from the date of PO to completion of supply [Price Variation Clause (PVC) not acceptable]	Acceptable / Not acceptable
2	**Terms of Payment**: Against "SIGHT DRAFT" on presentation of documents to our bankers. (a) 100% is payable on negotiation of complete set of original documents (b) 90 % is payable on negotiation of complete set of original documents & balance 10% against submission of PBG (where commissioning is NOT involved). (c) 75 % is payable on negotiation of complete set of original documents, 15% after satisfactory commissioning & balance 10% against submission of PBG (wherever commissioning & PBG is involved). (d) Deviation if any please specify Note: Refer clause 14 (a) above.	(a) Acceptable / Not acceptable (b) Acceptable / Not acceptable (c) Acceptable / Not acceptable (d)
3	**BHEL's penalty clause:** (a) Delay in delivery as per PO delivery date will result in penalty of 0.5 % per week subject to maximum of 10% on the value of the items not supplier/delayed. (b) Deviation if any Please specify	(a) Acceptable / Not acceptable (b)
.4	**Performance Bank guarantee**: PBG for 10% of the basic material cost shall be furnished in the BHEL prescribed format as detailed in clause 17.	Yes / No
5	**Terms of delivery:** (a) F.O.B international Airport/Seaport as per clause 19 (a) (Indicate name of International Airport/Seaport) (b) Deviation if any Please specify	(a) Acceptable / Not acceptable (b)
6	**Warranty:** (a) 18 months from the date of dispatch or 12 months from the date of commissioning (b) Deviation if any Please specify	(a) Acceptable / Not acceptable (b)
7	**Delivery period:** Indicate number of weeks from the date of issue of Purchase order	_____Weeks
8	**Validity:** (a) Quotation should remain valid for a period of 90 days from the due date (b) Deviation if any Please specify	(a) Acceptable / Not acceptable (b)
9	**Bank charges (If applicable):** (a) Bank charges within India is to BHEL account and outside India is to Supplier's account (b) Deviation if any Please specify	(a) Acceptable / Not acceptable (b)

Signature of renderer / with seal

ANNEXURE - B

COMMERCIAL TERMS (to be enclosed with TECHNO-COMMERCIAL BID)

(For Indigenous Purchase Orders)

Sl. No.	Particulars	Bidder's confirmation
1	**Price basis:** Firm i.e., from the date of PO to completion of supply [Price Variation Clause (PVC) not acceptable]	Acceptable / Not acceptable
2	**Excise duty:** If applicable indicate %.	Applicable / Not applicable ED:_____%
3	**Sale tax:** If applicable indicate %	Applicable / Not applicable (a) VAT_____% (b) CST_____% against form C
4	**Payment terms:** (a) 100% payment with 30 days credit (b) 90 % basic payment + 100% taxes, duties & freight charges with 30 days credit & balance 10% against submission of PBG (where commissioning is NOT involved) (c) 75 % basic payment + 100% taxes, duties & freight charges with 30 days credit, 15% after satisfactory commissioning & balance 10% against submission of PBG (wherever commissioning & PBG is involved). (d) Deviation if any please specify Note: As per clause 14 (b)	(a) Acceptable / Not acceptable (b) Acceptable / Not acceptable (c) Acceptable / Not acceptable (d)
5	**BHEL's penalty clause:** (a) Delay in delivery as per PO delivery date will result in penalty of 0.5 % per week subject to maximum of 10% on the basic value of the items not supplier/delayed. (b) Deviation if any Please specify	(a) Acceptable / Not acceptable (b)
6	**Performance Bank guarantee (PBG):** PBG for 10% of the basic material cost shall be furnished in the BHEL prescribed format as per clause 17.	Yes / No
7	**Terms of delivery:** (a) Ex EDN / BHEL, Bangalore (Free delivery to EDN/BHEL Bangalore including freight, packing & forwarding charges) (b) Deviation if any Please specify	(a) Acceptable / Not acceptable (b)
8	**Warranty:** (a) 18 months from the date of dispatch or 12 months from the date of commissioning (b) Deviation if any Please specify	(a) Acceptable / Not acceptable (b)
9	**Delivery period:** Indicate number of weeks from the date of issue of Purchase order	_____Weeks
10	**Validity:** (a) Quotation should remain valid for a period of 90 days from the due date (b) Deviation if any Please specify	(a) Acceptable / Not acceptable (b)
11	**Bank charges (If applicable):** (a) All Bank charges to supplier's account (b) Deviation if any Please specify	(a) Acceptable / Not acceptable (b)

Signature of renderer / with stamp

ANNEXURE - C

LIST OF INTERNATIONAL AIRPORTS

Sl. No	Country	Air Ports
1	Austria	Vienna, Linz, Graz
2	Australia	Sydney, Melbourne, Perth
3	Belgium	Antwerp, Brussels
4	Canada	Toronto, Montreal
5	China	Shangai
6	Cyprus	Lamaca
7	Czech Republic	Prague (Via Frankfurt)
8	Denmark	Copenhagen
9	Egypt	Cairo
10	Finland	Helsinki
11	France	Paris (Rossy), Lyon
12	Germany	Darmstadt, Manihiem, Nurnberg, Hamburg, Stutttgart, Munich, Koln, Dusseldorf & Hannover, Frankfurt, Berlin
13	Hongkong	Hongkong
14	Italy	Rome, Milan, Turin, Bologna, Florence
15	Ireland	Dublin
16	Isrel	Telaviv
17	Japan	Tokyo, Osaka
18	Malaysia	Kaulalampur, Penang
19	Neatherlands	Amsterdam, Rotterdam
20	Newzealand	Auckland
21	Norway	Oslo
22	Oman	Muscat
23	Philiphines	Manila
24	Romania	Bucharest
25	Russia	Moscow
26	Saudi Arabia	Riyad
27	Singapore	Singapore
28	Slovakia	Bartislowa
29	South Africa	Johannesburg, Durban
30	South korea	Kimpo
31	Spain	Barcelona
32	Sweden	Stockholm, Gothenburg, Milano
33	Switzerland	Basle, Zurich, Geneva
34	Taiwan	Taipei
35	U.A.E.	Dubai
36	U.K.	Landon (Heathrow), Newcastle, Oxford, Cheltham, Bristol, Wellingborough, Birmingham, East Midland, Manchester,Leeds, Glasgow.
37	U.S.A.	Newyork, Chicago, Sanfrancisco, Los Angeles, Atlanta
38	Ukraine	Kiev

ANNEXURE-D

EDN/BHEL APPROVED TRANSPORTERS FOR INLAND ROAD TRANSPORTATION

1. M/s Awagaman Road Carriers ltd., Bangalore. (AWG)
2. M/s BLR India pvt., ltd., Bangalore. (BLR)
3. M/s Delhi Assam Roadways corporation ltd., Bangalore. (DRL)
4. M/s Indo Arya Central transport ltd., Bangalore. (IACT)
5. M/s Prakash parcel Services, Bangalore. (PPS)
6. M/s Road Carrier of India, Bangalore. (RCI)
7. M/s Union Roadways ltd., Bangalore. (URL)

ANNEXURE-E

PERFORMANCE BANK GUARANTEE
(FOR FOREIGN PURCHASE ORDERS)

BANK NAME AND ADDRESS

Bharat Heavy Electricals Limited (BHEL),
Electronics Division,
PB No. 2606,
Mysore Road,
BANGALORE- 560 026
INDIA

Dear Sir,

Ref: CONTRACT PERFORMANCE GUARANTEE.

WHEREAS you have entered into a contract reference No PO NO. _____ with M/s _____ having its registered office at_____for the supply of _____ as detailed in your purchase order No. _____ which is hereinafter referred to as "the said contract" and WHEREAS M/s _____ has undertaken to produce a Bank Guarantee for 10% (Ten Percent) of the contract price amounting to _____(_____ _____) to secure its obligations to Electronics Division, BHEL having its registered office at New Delhi for the performance of the contract including the warranty of the equipment supplied, We_____ Bank ,_____hereby expressly, irrevocably and unreservedly undertake and guarantee as principal obligors on behalf of M/s_____that in the event Bharat Heavy Electricals Ltd. (B.H.E.L.) declares to us in writing that M/s_____ has not fulfilled any obligation according to the contractual obligation of the said contract, to pay you on demand and without demur to Bharat Heavy Electricals Ltd., Electronics Division , Mysore Road, P.B.No. 2606, Bangalore-560 026, India an amount of _____(in words _____) subject to as may be determined below:

1) Notwithstanding any right M/s. _____ may have directly against you or any disputes raised by M/s _____, Your written demand shall be conclusive evidence to us that repayment is due under the terms of the said contract and shall be binding on us.

2) We shall not be discharged or released from this undertaking and Guarantee by any arrangements, variations made between you and M/s. _____ with or without our consent and Knowledge or by any alterations in the obligations of M/s. _____ by any forbearance whether as to payment, time, performance or otherwise.

3) This guarantee shall remain valid until the end of twenty-four weeks after the close of the warranty period or until the same is reported by BHEL to us whichever is earlier.

4) We agree and undertake not to revoke this guarantee during its validity unless discharged in writing by you subject to the provision of clause (7) below.

5) This guarantee shall be a continuing guarantee subject to the foregoing and shall not be discharged by any change in the constitution of the Bank or M/s. _____.

6) This guarantee shall be governed by and constructed in accordance with the Laws of India.

7) At any time _____ Bank may render this guarantee null and void by paying to Bharat Heavy Electricals Ltd. the full amount being _____ (in words _____)

For and on behalf of Bank
by its Authorised Signatory

Note:

(1) To be executed in INR 100 Non-Judicial stamp paper by any authorized Indian Bank.

(2) To be submitted directly by banker to concerned executive in purchase dept., Please give BHEL address to banker.

(3) Do not enclose with Bank document.

(4) Any Modification & omissions to this format are not permitted

Note: The Bank Guarantee from Foreign vendors from Foreign bank needs to be confirmed by any Indian consortium Bank.

ANNEXURE - F

PERFORMANCE BANK GUARANTEE
(FOR INDIGENOUS PURCHASE ORDERS)

THIS DEED OF GUARANTEE made and executed on the _____ day of _____(year), by the _____ (Bank), registered under the Companies Act 1956/Nationalised Bank constituted under the Banking Companies (acquisition and transfer of undertakings) Act constituted under the State Bank of India Act / Subsidiary Banks Act, having its registered / head office at _____ represented herein by its Branch Manager / authorised representative Sri. _____ & Sri._____(Hereinafter called 'guarantor ' which term shall mean and include its successors and assigns)

IN FAVOUR OF BHARAT HEAVY ELECTRICALS LIMITED

_____ (Buyer's Name), a company registered under the companies Act, 1956 having its registered office at BHEL House at Siri Fort , New Delhi-100 049 and its Electronics Division at Mysore road, Bangalore-26 (hereinafter referred to as the 'Company' Which term shall include its successors and assigns):

Whereas the company has placed an order on _____ (State the name of the company / firm and its address) (hereinafter referred to as the 'Supplier' which term shall mean and include its liquidators, successors and assign) for the supply of system under order / Contract No_____Dt _____.

AND WHEREAS the supplier has agreed to supply the materials and carryout the works as detailed and in accordance with the terms set out in the said order/contract.

AND WHEREAS the company is not required to pay to the supplier a sum of Rupees _____being the 10% of the value of the goods supplied / Works performed / Services rendered under the said order / contract between the supplier and the company, till the company is satisfied with the mechanical Warranties and the performance standards stipulated in the said order / contract between the company and the supplier has been duly fulfilled, except against a Bank Guarantee for the said sum of Rs_____ in favour of the company by reputed Bank, in which case the company has agreed to make payment to the supplier of the said sum of Rupees _____ being (…%) of the value of the goods supplied / Works performed / Services rendered under the agreement between the supplier and the company and the Guarantor has at the request of the supplier, agreed to furnish this Guarantee subject to the terms and conditions stated below:

NOW THIS DEED WITNESSES THAT IN pursuance of the above said agreement, the guarantor hereby agrees and covenants With company is as follows :-

1) That during the period this contract of Guarantee remains effectual, the guarantor shall be liable in respect of the amount due and owing to the company in respect of the payments to the extent of Rs _____ (in words) _____ against any loss or damage caused to or suffered by the company by reasons of any breach of the terms of the said order / contract / Agreement by the supplier.

2) The Guarantor hereby undertakes to pay the amounts due and payable under this guarantee without any demur, merely on demand from the company intimating that the amount claimed is due by way of loss or damage caused to or suffered or would be caused or suffered by the supplier of any terms contained in the said order / contract. Any such demand made on the guarantor shall be conclusive as regards the amount due and payable by the Guarantor irrespective of the fact whether the Contractor / supplier admits or denies.

3) The Guarantor further agrees that the agreement herein contained shall remain in force and effect till all the supplies to be made / Works to be performed / Services to be rendered under the said order / contract / agreement are completed to the entire satisfaction of the company or till company certifies that the terms and conditions of the said order / contract / agreement have been fully and properly carried out by the said supplier and accordingly discharges the Guarantee. Unless a demand or claim under this guarantee is made on the guarantor in writing on or before the expiry of claim period indicated in clause 6 below , the guarantor shall be discharged from all the liability under this guarantee thereafter.

4) The guarantor further agrees with the company that the company shall have the fullest liberty without the consent of the guarantor and without effecting in any manner the obligations of the guarantor hereunder to vary any of the terms of the said order / contract / agreement or extend the time of performance by the said supplier from time to time or refrain from exercising the power exercisable by the company against the said supplier or to forebear or omit to enforce any of the terms and conditions relating to the said order / contract / agreement, and the guarantor shall not be relieved of its liability in whole or in part , by reason of any act, commission or forbearance on the part of the company or by reason of any such variation, or extension being granted to the said supplier or by reason of any such matter or thing whatsoever which under the law relating to sureties would but for this provision have effect of so relieving the guarantor.

5) The guarantor undertakes not to revoke this guarantee during its currency except with the previous consent of the company in writing.

6) Notwithstanding anything herein above contained, the liability of the guarantor under these presents is restricted to Rs_____. The guarantee shall be in force till its expiry on _____ unless a demand is made on the guarantor within SIX months from the date of expiry, all the liability of the guarantor under this guarantee shall stand fully discharged. The decision of the claimant in regard to breach of contract is final and binding on the Bank.

IN WITNESS whereof, the guarantor, acting through it authorised representative has executed this deed of Guarantee on the day, month and year first above written.

(Seal of the Bank to be affixed)

WITNESS

1.

2.

BHEL MEMBER BANKS (CONSORTIUM BANKS)

PBG SHALL BE ISSUED FROM THE FOLLOWING BANKS OR THEIR BRANCH OFFICES ONLY

Sr. No.	Consortium Banks
1	STATE BANK OF INDIA
2	PUNJAB NATIONAL BANK
3	HDFC BANK
4	SYNDICATE BANK
5	CANARA BANK
6	INDIAN BANK
7	ST. BANK OF HYDERABAD
8	ICICI BANK
9	STANDARD CHARTERED BANK
10	UCO BANK
11	KOTAK MAHINDRA
12	ORIENTAL BANK OF COMMERCE
13	STATE BANK OF TRAVANCORE
14	CENTRAL BANK
15	IDBI BANK
16	FEDERAL BANK
17	HSBC LTD
18	DEUTSCHE BANK
19	CORPORATION BANK
20	CITI BANK
21	BANK OF BARODA
22	ABN AMRO BANK
23	UNITED BANK OF INDIA
24	VIJAYA BANK
25	UNION BANK OF INDIA
26	PUNJAB & SIND BANK
27	ANDHRA BANK
28	BANK OF INDIA
29	AXIS BANK

Note : The list of consortium Bank will be updated periodically. Please check with the concerned Purchase Executive before executing BG.

***

COPYRIGHT AND CONFIDENTIAL
The information on this document is the property of Bharat Heavy Electricals Ltd.
It must not be used directly or indirectly in anyway detrimental to the interest of the company

Test cabinet for semiconductor devices

A. Purpose of the test cabinet:

The **TEST CABINET** is used for storing the semiconductor devices (DUT) such as high power diodes and thyristors at an elevated temperature up to 200 ^{o}C, under an applied high voltage bias (full-wave rectified sine wave) selected based on device rating. For diodes, the bias is in reverse direction applied for 16 hours. For thyristors, the bias is applied initially in reverse direction for 8 hours followed by an automatic change-over to forward direction for 8 hours. In either case, the maximum bias requirement is 5000 V (peak) and the maximum leakage current through each DUT is 100 mA (peak).

In the test, I-V characteristic of the DUT is measured before and after the 16-hours storage, using an external measuring source and the observed change in the characteristic is used as a measure of electrical stability of the device. It is necessary that the post-storage measurements are taken without switching-off the storage bias, as the external source is allowed to interrupt the bias only for the momentary duration of I-V measurement.

The external measuring source is within the scope of BHEL. The test cabinet, as detailed under section B, shall have provisions for connecting to the external source and shall also be provided with suitable circuitry for the momentary interruption of storage bias during post-storage measurement.

To enable clear understanding of the scope of test cabinet, the test procedure is explained under section-H.

COPYRIGHT AND CONFIDENTIAL
The information on this document is the property of Bharat Heavy Electricals Ltd.
It must not be used directly or indirectly in anyway detrimental to the interest of the company

B. TECHNICAL SPECIFICATION OF TEST CABINET:

Vendor shall fill up the 'vendor compliance column' against each of the specification points.

No	Specification	Vendor Compliance
1.	Overall exterior dimensions of the test cabinet shall be as follows: Height = 2200 mm (Max) (including wheels), Width = 600 mm (Max), Depth = 800 mm (Max)	
2.	Devices tested (DUTs) will be of two types in respect of size and shape. One type is 'square-base device' with flat contact surface on one polarity side **(type-1)**, whereas the other type is 'disc-type device' with flat contact surface on both the polarity sides **(type-2)**. The outline drawings of both the types are shown in drawing 3-679-03-00451. (Type-2 has three variants).	
3.	Number of storage racks = 5, with two rows of storage per rack.	
4.	Number of storage positions per rack is 10 Nos (5 Nos per row) for type-1 devices and also for two of the variants of type-2. For the third variant of type-2, it is 6 Nos (3 Nos per row) per rack.	
5.	The positions of storage racks, control panel and cooling fans shall be maintained in line with the schematic drawing 3-679-03-00449.	
6.	Each storage rack shall be provided with one heater plate that is fixed on the rack with its DUT-mounting surface oriented in vertical direction. Heater plate shall be as per drawing 3-679-03-00448. The heaters, four per storage rack, 4x350W / 230V **will be supplied by BHEL**. Vendor shall provide suitable arrangements for fixing the heaters.	
7.	Each of the two rows of the storage rack is provided with an aluminium plate for mounting the DUTs. These plates are, in turn, mountable on the heater plate using plug-in type electrical connection to facilitate easy fixing and removal, since the plates are taken out for mounting and unloading the DUTs for every test run. For type-1 device, the plate shall be as per drawing 3-679-03-00438. For type-2 device, the plate with mounting arrangement shall be as per drawing 3-679-03-00450. (Note: All threaded holes shall be with push-fit Helicoil SS inserts).	
8.	As mentioned in 3-679-03-00449, the orientation of mounting plates shall be such that the contact surface of DUT is along the vertical plane (perpendicular to the floor).	

9.	Storage temperature shall be 200 ^{o}C (max), as measured near base of DUT. For each storage rack, a separate digital temperature controller with RS485 communication interface facility shall be provided. PT100 temperature sensor shall be employed.	
10.	<u>High voltage (HV) source:</u>	
10.1	HV transformer with 3.7 kVA rating (input 230V AC). Secondary side shall have 3.7 kV rms and 1A rms rating. Secondary terminals shall be left floating.	
10.2	Single-phase 15A-variac on the primary side of HV transformer.	
10.3	Secondary side of transformer shall have a single-phase full-wave bridge rectifier with a) Diode strings with blocking voltage rating of 12kV minimum per arm and forward current rating of 6A rms, and b) Suitable heat sinks for the diodes.	
10.4	Voltage surge suppressors of suitable rating shall be provided at primary side of HV transformer and also, at input side of variac.	
10.5	Magnitude of storage bias, as applied to DUT, shall be continuously variable and also, selectable up to a maximum of 5000V peak (sine, full-wave rectified) using the Variac. Polarity of waveform (forward, reverse) shall be selectable.	
11.	<u>High voltage relay circuit:</u> A suitable circuit with high voltage relays shall be provided to switch the individual DUTs between the internally applied cabinet voltage (storage bias) and the voltage from external source during I-V measurement.	
12.	<u>Protection against short-circuit of DUT:</u> 2 nos high voltage resistor of rating 15 kΩ / 120-150W / 3300V shall be provided in series with each DUT, to prevent short circuit in case the DUT becomes electrically short, while operating from cabinet voltage.	
13.	A time switch shall be provided to indicate the time duration and also to automatically switch the applied bias across DUTs, in the case of thyristors, after 8 hours of storage during the test (see section-H). The time switch shall have an option for RS485 communication.	

COPYRIGHT AND CONFIDENTIAL
The information on this document is the property of Bharat Heavy Electricals Ltd. It must not be used directly or indirectly in anyway detrimental to the interest of the company

14.	Another time switch shall be provided to initiate the testing on next day (usually Sunday) by automatically switching ON cabinet bias at the set time. The time switch shall have an option for RS485 communication.	
15.	Suitable provision shall be made for automatically switching ON the Mains supply with a delay of 5-10 seconds from the instant the power has resumed after the occurrence of a power failure.	
16.	Data logging system shall be offered as an option for logging of the test parameters such as voltage, current, time and temperature.	
17.	<u>Control panel shall be provided with:</u> 17.1) Power switch (ON/OFF) 17.2) Lamp indicators (LED) for R, Y, B 17.3) Variac control (for selection of storage voltage) 17.4) Digital voltmeter with RS485 communication option (to indicate peak value of storage voltage). 17.5) Digital current meter with RS485 communication option (to indicate total average current). 17.6) Time-switches 17.7) Temperature controllers 17.8) Fuses for heater circuits, HV circuits and control circuits. 17.9) Female Lemosa Socket, Model No. RA5705x1+24 (to connect the external source for I-V measurement) 17.10) Push buttons (with LED lamp indicator) for the following: (a) To select thyristor testing (“Auto”) (b) To select diode testing (“Manual”) (c) To select reverse bias (“UR”) (d) To select forward bias (“UD”) (e) To switch ON/OFF the heaters (“Heat”) (f) To switch ON/OFF the fans for cooling (“Cool”)	
18.	Wires used for wiring shall have PTFE or Silicone insulation with a thickness to withstand a minimum of 6kV AC RMS. In the case of HV circuits, wires shall have insulation of 10kV rms. All the wires shall be ensured to withstand a temperature of 225 ^{o}C minimum.	
19.	The plates on which the DUTs are mounted shall be grounded. As these mounting plates act as one polarity (anode / cathode) of the DUT, a distribution board shall be provided for each row of DUTs for making electrical connection to the other end / polarity of the device, using a suitable lead wire.	

COPYRIGHT AND CONFIDENTIAL
The information on this document is the property of Bharat Heavy Electricals Ltd.
It must not be used directly or indirectly in anyway detrimental to the interest of the company

COPYRIGHT AND CONFIDENTIAL
The information on this document is the property of Bharat Heavy Electricals Ltd.
It must not be used directly or indirectly in anyway detrimental to the interest of the company

20.	Temperature / fire / smoke detection, annunciation and interlock system shall be provided for all the storage racks and also for the rack where variac is positioned.	
21.	All the racks and components shall be easily accessible from the front and back sides.	
22.	The sides of the test cabinet shall be fully shielded from outward heat radiation using adequate wools and blankets.	
23.	Doors with HV safety-interlocks, ergonomically-designed handles and toughened door glasses of 10-mm thick.	
24.	All the metal portions exposed to atmosphere shall be suitably painted.	
25.	Test cabinet shall be provided with wheels to facilitate ease of movement and transportation.	
26.	As a whole, the test cabinet with all provisions specified as above shall be within a single enclosure.	
27.	Make of certain specific components shall be as mentioned below. In case any other make is proposed by vendor, prior approval shall be obtained from BHEL. (a) HV relays: SPS electronic GmbH (or) Hengstler (b) Cooling fans: EBM Nadi make (c) Power supply (SMPS) 24V/10A: Power cube (or) Phonix (d) Contactor: L&T (or) IEC (e) Temperature controller: Autonics / Eurotherm / Yokogawa / Fuji (f) Timer: Autonics / EAPL (g) Solid state relays: ERI (h) Transformer: Glasstronics / Universal (i) Racks: President system / Rittel (j) Voltmeter and Leakage current meter: Autonics / EM electronix (k) Variac: Automatic Electric	

C. INSTALLATION AND COMMISSIONING

1.	Scope of offer shall include installation and commissioning that includes (a) connecting the equipment to the existing service facilities at BHEL, (b) conducting test trials at BHEL using semiconductor devices and (c) thereby verifying satisfactory performance of the test cabinet.	

D. SPARES AND ACCESSORIES:

1.	Spares including consumable items for two-years of trouble-free operation shall be **separately offered as OPTIONAL items with item-wise price break-up.** List of all spares with part numbers & vendor address shall be provided.	
2.	One set of accessories and tools, if any, required for operation of the test cabinet shall be **separately offered with price break-up.**	

COPYRIGHT AND CONFIDENTIAL
The information on this document is the property of Bharat Heavy Electricals Ltd.
It must not be used directly or indirectly in anyway detrimental to the interest of the company

E. PRICE BREAK-UP'S IN THE OFFER:

1.	Offer shall be submitted with separate price indications for: (a) Main equipment without heaters mentioned in clause 6 of section-B and without mounting arrangements for type-2 device (3-679-03-00450) (b) Mounting arrangements for the three variants of type-2 device as per 3-679-03-00450 (variant-wise price break-ups) (c) Spares as optional as per section-D, and (d) Accessories and tools (if any, as per section-D).	

F. GENERAL CONDITIONS

1.	Equipment shall be designed taking into account all Safety and OHSAS requirements. Hazards connected with operation & maintenance of the equipment shall be brought out explicitly and instructions for minimizing the hazards (environmental / safety) to be indicated.	
2.	Three sets of operation and maintenance manual in English shall be supplied along with the equipment. The manual shall include circuit diagram, component layout, PCB art work, trouble shooting chart indicating symptoms, checks and preventive maintenance schedule to be carried out, suggested remedy for all items including the bought out items. This shall also include all mechanical / pneumatic / hydraulic diagrams for the components / systems used in the equipment.	
3.	RFI filter / surge suppressor shall be provided at mains (incoming) stage as well as at the input stage of critical electronic instruments / systems used in the equipment.	
4.	Supplier shall submit test and guarantee certificates. Calibration certificates for all instruments and indicators shall be provided. Calibration procedures shall be provided. Warranty shall be provided for a **minimum period of one year** from date of commissioning.	
5.	Supplier's operators / engineers deputed for installation of the equipment at BHEL works shall comply with safety regulations and precautions. They shall be trained adequately in environmental / health / safety hazards associated with the installation and operation of the equipment.	
6.	Service facilities required, Environmental requirements and their tolerance limits may be furnished as per the '**Format for Service Facilities**' enclosed.	

G. FORMAT FOR SERVICE FACILITIES

01 ELECTRICAL

THREE PHASE :
KVA RATING :
NO. OF SERVICE POINTS :
SINGLE PHASE :
KVA RATING :
NO. OF SERVICE POINTS :

02 CHILLED WATER

FLOW (LPM) :
PRESSURE (PSI) :
PORT SIZE(INCHES) :
NO. OF SERVICE POINTS :
TEMPERATURE (Deg C) :

03 RAW WATER

FLOW (LPM) :
PRESSURE (PSI) :
PORT SIZE (INCHES) :
NO. OF SERVICE POINTS :

04 COMPRESSED AIR

FLOW (LPM) :
PRESSURE (PSI) :
PORT SIZE (INCHES) :
NO. OF SERVICE POINTS :

05 DRAIN

PORT SIZE (INCHES) :
NO. OF SERVICE POINTS :

06 DM WATER

FLOW (LPM) :
PRESSURE (PSI) :
PORT SIZE (INCHES) :
NO. OF SERVICE POINTS :
RESISTIVITY (M. Ohms) :

07 EXHAUST

FLOW (CFM) :
PORT SIZE (INCHES) :
NO. OF SERVICE POINTS :

08 CLASS OF CLEAN ROOM FOR PROCESS AREA:

09 OTHER SERVICES (Including Process Gases) :

10 ENVIRONMENT

TEMPERATURE (DEG C) :
HUMIDITY (%) :

COPYRIGHT AND CONFIDENTIAL
The information on this document is the property of Bharat Heavy Electricals Ltd. It must not be used directly or indirectly in anyway detrimental to the interest of the company

COPYRIGHT AND CONFIDENTIAL
The information on this document is the property of Bharat Heavy Electricals Ltd.
It must not be used directly or indirectly in anyway detrimental to the interest of the company

H. TEST SPECIFICATION:

The complete test specification is described here below with the steps and sequences.

H1. Diodes:

1) Take out the mounting plates from the storage racks of the test cabinet.
2) Mount the devices (DUTs) on the plates.
3) Fix the plates mounted with DUTs in the cabinet.
4) Connect the external source, which is in BHEL scope, to the test cabinet.
5) Select each DUT using the selector switch in the external source.
   Measure and record the reverse I-V characteristic (peak leakage current (I_R) versus reverse voltage (U_R). [Max U_R / I_R peak values = 5000 V / 100 mA]
6) Heat up the DUTs to the specified elevated temperature (200 ^oC max).
7) Repeat step 5 (I-V measurements).
8) Using variac control in the test cabinet, apply the specified bias in reverse direction.
9) At the end of 16-hours, repeat step 5 (I-V measurement using external source), but without switching OFF the cabinet bias.
10) After the I-V measurement on all DUTs, switch OFF the cabinet bias.
11) Switch OFF the heaters and allow the DUTs to cool down.
12) At room temperature, repeat step 5 (I-V measurement using external source).
13) Take out the mounting plates with DUTs. Unload the DUTs from the plates.
14) Fix the empty mounting plates back in the cabinet.

Note: The difference between the pre-storage and the post-storage I-V values in comparison with specification limits forms the basis for acceptance of the DUTs.

H2. Thyristors:

1) Take out the mounting plates from the storage racks of the test cabinet.
2) Mount the devices (DUTs) on the plates.
3) Fix the plates mounted with DUTs in the cabinet.
4) Connect the external source, which is in BHEL scope, to the test cabinet.
5) Select each DUT using the selector switch in the external source.
   Measure and record both the forward and reverse I-V characteristics (peak leakage currents (I_D, I_R) versus voltage (U_D, U_R). [Max U_D, U_R / I_D, I_R peak values = 5000V / 100 mA]
6) Heat up the DUTs to the specified elevated temperature (200 ^oC max).
7) Repeat step 5 (I-V measurements).
8) Using variac control in the test cabinet, apply the specified bias in reverse direction.
9) At the end of 8 hours, the timer in the test cabinet automatically switches the bias to forward direction and allows the bias ON for another 8 hours.
10) At the end of 8+8 hours, repeat step 5 (I-V measurement using external source), but without switching OFF the cabinet bias.
11) After the I-V measurement on all DUTs, switch OFF the cabinet bias.
12) Switch OFF the heaters and allow the DUTs to cool down.
13) At room temperature, repeat step 5 (I-V measurement using external source).
14) Take out the mounting plates with DUTs. Unload the DUTs from the plates.
15) Fix the empty mounting plates back in the cabinet.

Note: The difference between the pre-storage and the post-storage I-V values in comparison with specification limits forms the basis for acceptance of the DUTs.

COPYRIGHT AND CONFIDENTIAL
The information on this document is the property of Bharat Heavy Electricals Ltd.
It must not be used directly or indirectly in anyway detrimental to the interest of the company

I. PRE-QUALIFICATION CRITERIA CHECK-LIST

Sl. No	Particulars	Bidder's confirmation
1	The vendor shall be an Original Equipment Manufacturer (OEM) and OEM can only quote. OEM or their authorized dealers in India along with an authorization letter from the OEM can forward the offers.	Yes / No Name of OEM: Name of authorized dealer:
2	Catalogues and / or Data Sheets of the manufacturer, wherever applicable, shall be provided.	Yes / No
3	Offer shall be for new equipment and not for any refurbished / used equipment.	Certified new equipment: Yes / No
4	Foreign OEM shall have authorized Indian dealer(s) / representative(s) for service and support. The authorization letter for the dealer/ representative shall be provided.	Yes / No Name of Indian representative: Authorization letter enclosed: Yes / No
5	a) The vendor should have already supplied and installed in India at least one similar test cabinet for testing of power semiconductor diodes and thyristors of square-base construction with test temperature up to 200 deg.C and full-wave rectified storage voltage of 4500 V peak (minimum). The supplied test cabinet should be in satisfactory working condition for the last one year. b) The details of the customers with contact details, details of test cabinets installed and date of installations shall be submitted along with offer.	a) Yes / No b) Customer reference list enclosed : Yes / No
6	The vendor or their authorized service representatives shall have trained engineers in India and shall be in a position to provide prompt on-site repair service and spares support for the offered equipment.	Yes / No
7	The vendor or their Indian representative shall be in a position to undertake AMC for the equipment supplied, after the expiry of the warranty/ guarantee period either directly or through their authorized Indian service representative for a period of 4 years.	Acceptable / Not acceptable
8	If required by BHEL, the vendor shall arrange for a demonstration of the machine or a similar system in operation.	Acceptable / Not acceptable
9	The vendor shall furnish a warranty for the equipment for at least 12 months from the date of commissioning for the equipment.	Acceptable / Not acceptable

Signature of Tenderer with stamp

Note:

a) Pre qualification will be carried out based on the details furnished by the vendor / feedback from their customers / inspection of the company / product if required by BHEL and at its sole discretion.

b) The Pre qualification criteria are mandatory requirements and the technical bids will be considered only if all the above nine Pre-Qualification Criteria are met.

FIRST ANGLE PROJECTION

ALL DIMENSIONS ARE IN mm

DRAWING NO. 3 679 03 00438

COPYRIGHT AND CONFIDENTIAL
The information on this document is the property of Bharat Heavy Electricals Limited.
It must not be used directly or indirectly in anyway detrimental to the interest of the Company

FIRST ROW (Top Plate) OF RACK

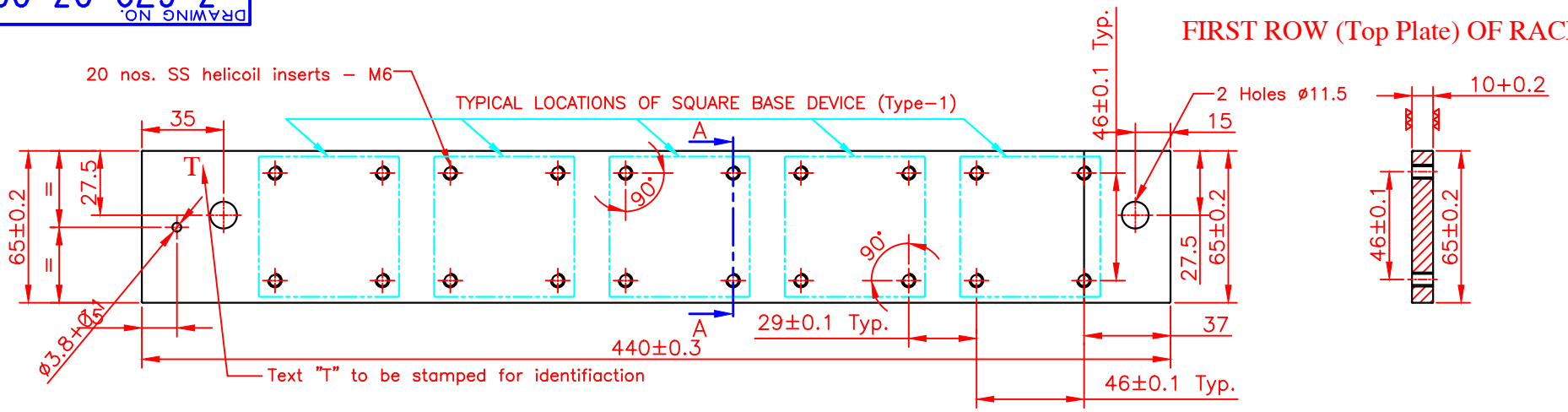

SECOND ROW (Bottom Plate) OF RACK

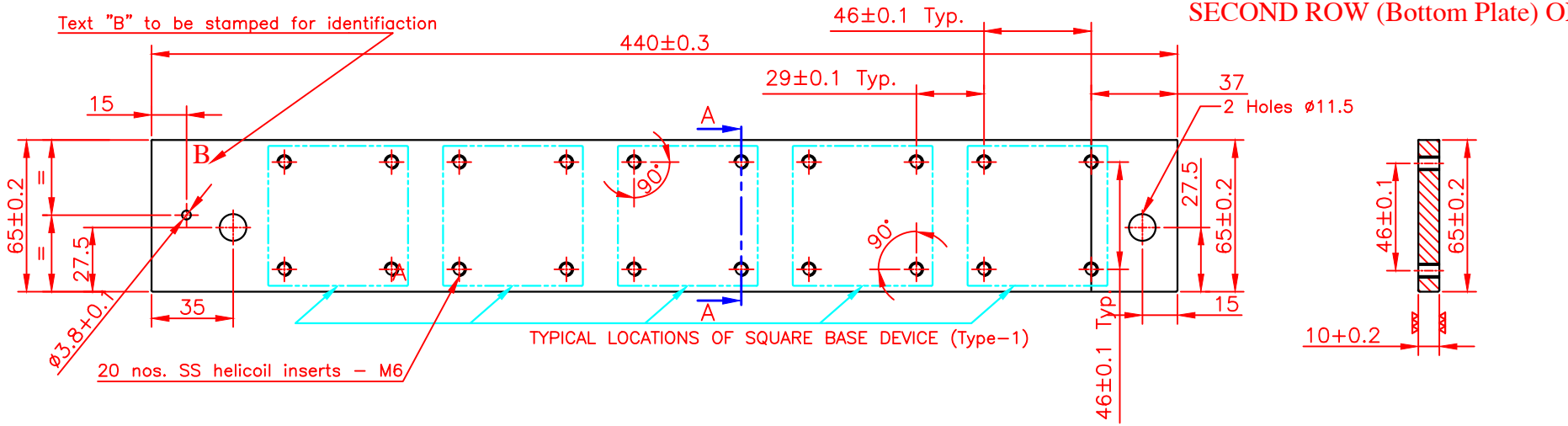

Material : Aluminium Alloy Extrusion AlMgSi1 as per IS 733
– Alloy designation : 64430
– Temper condition : WP
Finish : Natural

Notes:
1) Edges,corners and holes free from burrs.
2) Dimensional tolerances as per IS 2102 (medium) unless otherwise specified.
3) Socket head Allen head screw phosphated – M6x20 mm long (20 nos.per plate) to be supplied along with the DUT's mounting plates.

TYPE OF PRODUCT OR NAME OF CUSTOMER/PROJECT

BHARAT HEAVY ELECTRICALS LIMITED.
ELECTRONICS DIVISION, BANGALORE

	NAME	SIGN.	DATE	No. OF VAR
DRN	NAR	sd/	120508	
CKD	NHK	sd/	120508	
APPD	SS	sd/	120508	

REV.	DATE	ALTERED / CHECKED / APPROVED	REV.	DATE	ALTERED / CHECKED / APPROVED	REV.	DATE	ALTERED / CHECKED / APPROVED
			01	220610	NAR / NHK / SS	00		
				Title is modified			FIRST ISSUE	

DEPT.	FOR UNSPECIFIED TOLERANCES	SCALE	WEIGHT(Kg)	REF. TO ASSY. DRG.	ITEM NO.	No. OF ITEM
SC&PV	REFER ED 0230499	1:2				
CODE 438						

TITLE: Mounting plates for Type–1 DUT

DRAWING NO. 3 679 03 00438 REV. 01

SHEET NO. 01 NO. OF SHEETS 01

REF. DRG.NO. | SIGN & DATE | INVENTORY NO.

FORM No. A3–02 A3 SIZE

FIRST ANGLE PROJECTION

ALL DIMENSIONS ARE IN mm

DRAWING NO. 3 679 03 00448

COPYRIGHT AND CONFIDENTIAL
The information on this document is the property of Bharat Heavy Electricals Limited.
It must not be used directly or indirectly in anyway detrimental to the interest of the Company

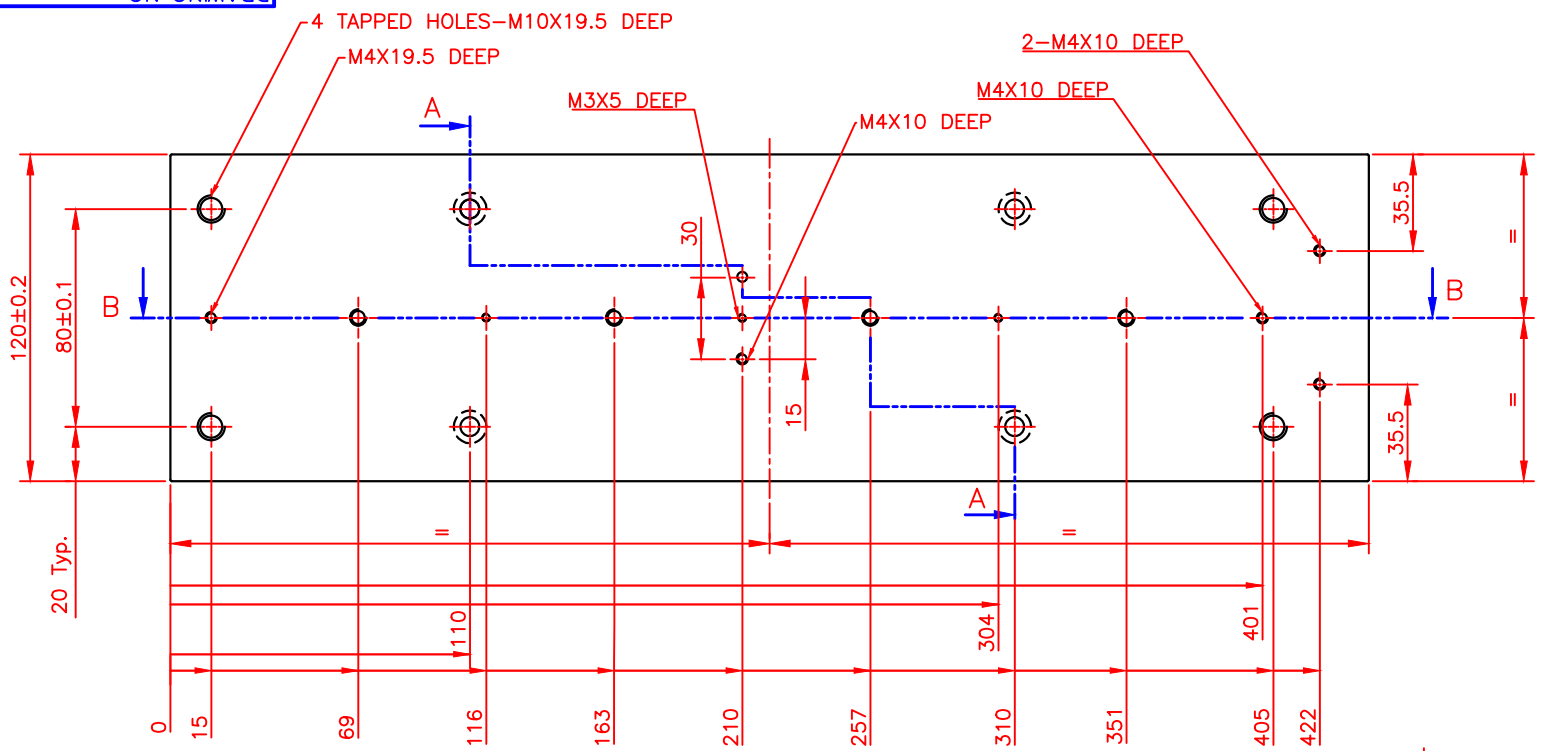

SECTION A–A

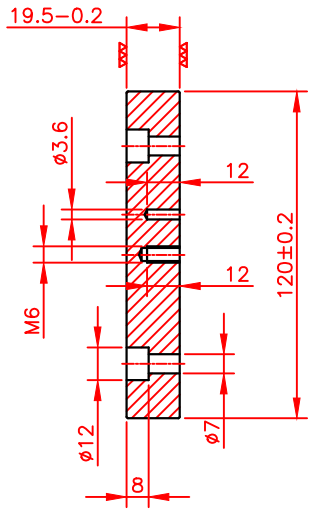

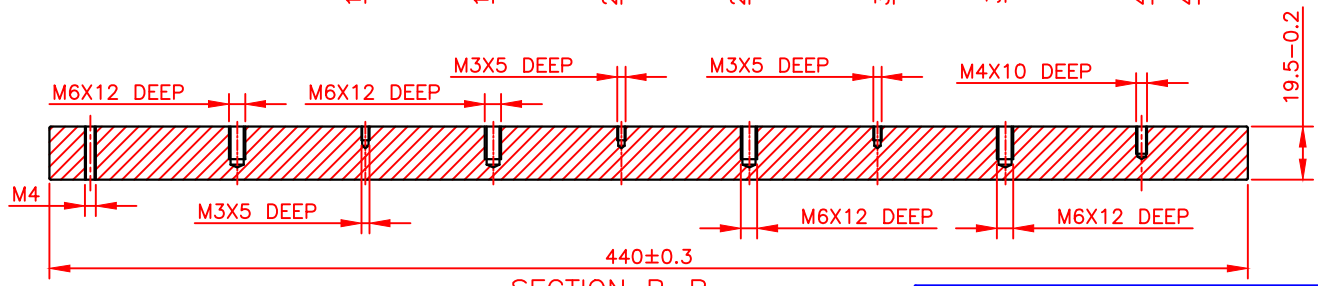

SECTION B–B

Material : Aluminium Alloy Extrusion AlMgSi1 as per IS 733
– Alloy designation : 64430
– Temper condition : WP
Finish : Natural

Notes:
1) Edges,corners and holes free from burrs.
2) Dimensional tolerances as per IS 2102 (medium) unless otherwise specified.

REV.	DATE	ALTERED / CHECKED / APPROVED

REV.	DATE	ALTERED / CHECKED / APPROVED

REV.	DATE	ALTERED / CHECKED / APPROVED
00		FIRST ISSUE

TYPE OF PRODUCT OR NAME OF CUSTOMER/PROJECT

BHARAT HEAVY ELECTRICALS LIMITED.
ELECTRONICS DIVISION, BANGALORE

	NAME	SIGN.	DATE	No. OF VAR
DRN	NAR	sd/	210610	
CKD	NHK	sd/	210610	
APPD	SS	sd/	210610	

DEPT.	FOR UNSPECIFIED–TOLERANCES REFER ED 0230499	SCALE	WEIGHT(Kg)	REF. TO ASSY. DRG.	ITEM NO.	No. OF ITEM
SC&PV / CODE 438		1:2				

TITLE HEATER PLATE

DRAWING NO. 3 679 03 00448 REV. 00

SHEET NO. 01 NO. OF SHEETS 01

REF. DRG.NO.

SIGN & DATE

INVENTORY NO.

FORM No. A3–02

A3 SIZE

FIRST ANGLE PROJECTION

ALL DIMENSIONS ARE IN mm

DRAWING NO. 3 679 03 00449

COPYRIGHT AND CONFIDENTIAL
The information on this document is the property of Bharat Heavy Electricals Limited.
It must not be used directly or indirectly in anyway detrimental to the interest of the Company

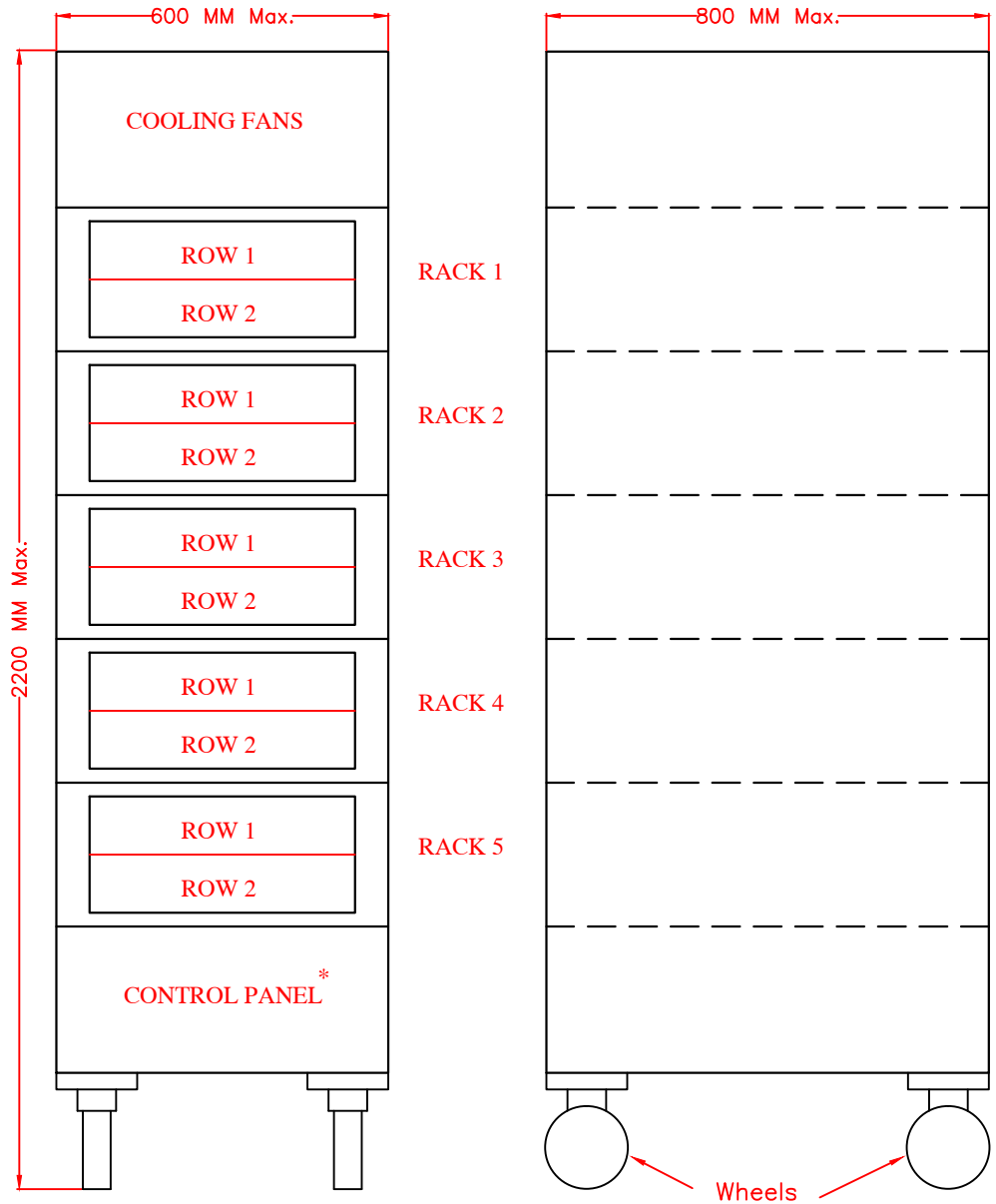

*
Control panel with Mains switch, Variac, Temperature controllers, Timers, Push buttons/Lamp indicators, Voltmeter, Ammeter, Fuses, Lemosa Socket, etc.,

Note:
1. This drawing is only to show the positions of the fans, racks and control panels.
2. DUT's are mounted on the front side of the racks, with contact surface of the DUT's vertically oriented.

TYPE OF PRODUCT OR NAME OF CUSTOMER/PROJECT

BHARAT HEAVY ELECTRICALS LIMITED.
ELECTRONICS DIVISION, BANGALORE

	NAME	SIGN.	DATE	No. OF VAR
DRN	NAR	Sd/-	210610	
CKD	NHK	Sd/-	240610	
APPD	SS	Sd/-	240610	

REV.	DATE	ALTERED / CHECKED / APPROVED
00		FIRST ISSUE

DEPT. SC&PV
CODE 438
FOR UNSPECIFIED TOLERANCES REFER ED 0230499
SCALE NTS
WEIGHT(Kg)
REF. TO ASSY. DRG.
ITEM NO.
No. OF ITEM

TITLE
SCHEMATIC OUTLINE OF TEST CABINET

DRAWING NO. 3 679 03 00449
REV. 00
SHEET NO. 01
NO. OF SHEETS 01

REF. DRG.NO.
SIGN & DATE
INVENTORY NO.

FORM No. A3-02

A3 SIZE

FIRST ANGLE PROJECTION

ALL DIMENSIONS ARE IN mm

DRAWING NO. 3 679 03 00450

COPYRIGHT AND CONFIDENTIAL
The information on this document is the property of Bharat Heavy Electricals Limited.
It must not be used directly or indirectly in anyway detrimental to the interest of the Company

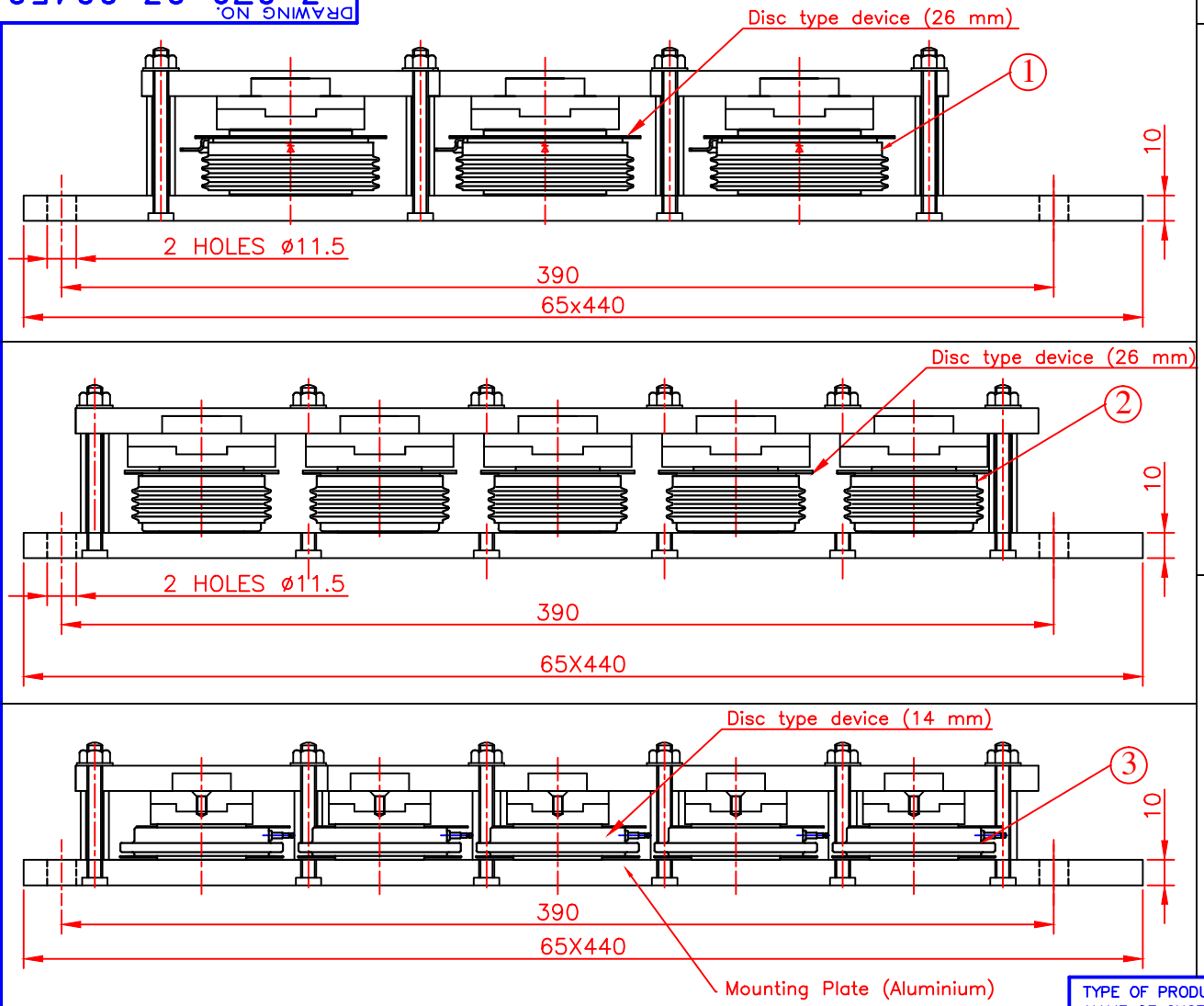

DISC TYPE DEVICE - 26 mm

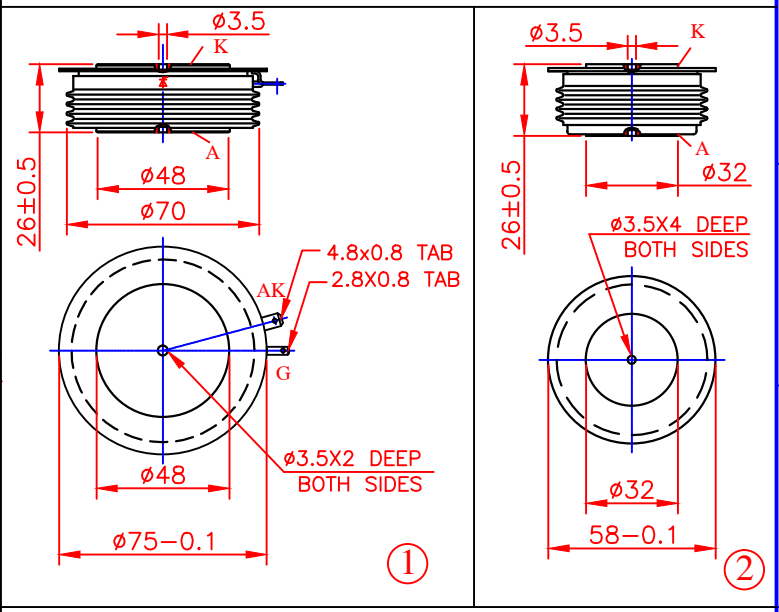

DISC TYPE DEVICE - 14 mm

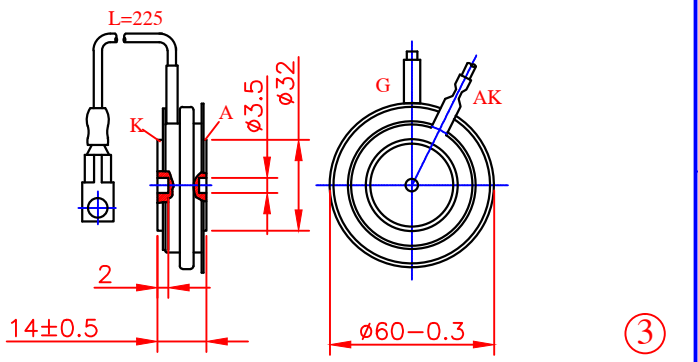

Note: This is schematic drawing only. showing mounting arrangement per row of the rack, for the three variant of Type-2 DUT's

TYPE OF PRODUCT OR
NAME OF CUSTOMER/PROJECT

BHARAT HEAVY ELECTRICALS LIMITED.
ELECTRONICS DIVISION, BANGALORE

	NAME	SIGN.	DATE	No. OF VAR
DRN	NAR	sd/	210610	
CKD	NHK	sd/	240610	
APPD	SS	sd/	240610	

REV.	DATE	ALTERED / CHECKED / APPROVED
00		FIRST ISSUE

DEPT. SC&PV
CODE 438
FOR UNSPECIFIED-TOLERANCES REFER ED 0230499
SCALE NTS
WEIGHT(Kg)
REF. TO ASSY. DRG.
ITEM NO.
No. OF ITEM

TITLE
SCHEMATIC ARRANGEMENT
(TYPE −2 DEVICES)

DRAWING NO. 3 679 03 00450
REV. 00
SHEET NO. 01
NO. OF SHEETS 01

REF. DRG.NO.
SIGN & DATE
INVENTORY NO.

FORM No. A3−02

A3 SIZE

FIRST ANGLE PROJECTION

ALL DIMENSIONS ARE IN mm

DRAWING NO. 3 679 03 00451

COPYRIGHT AND CONFIDENTIAL
The information on this document is the property of Bharat Heavy Electricals Limited.
It must not be used directly or indirectly in anyway detrimental to the interest of the Company

Type -1 Device

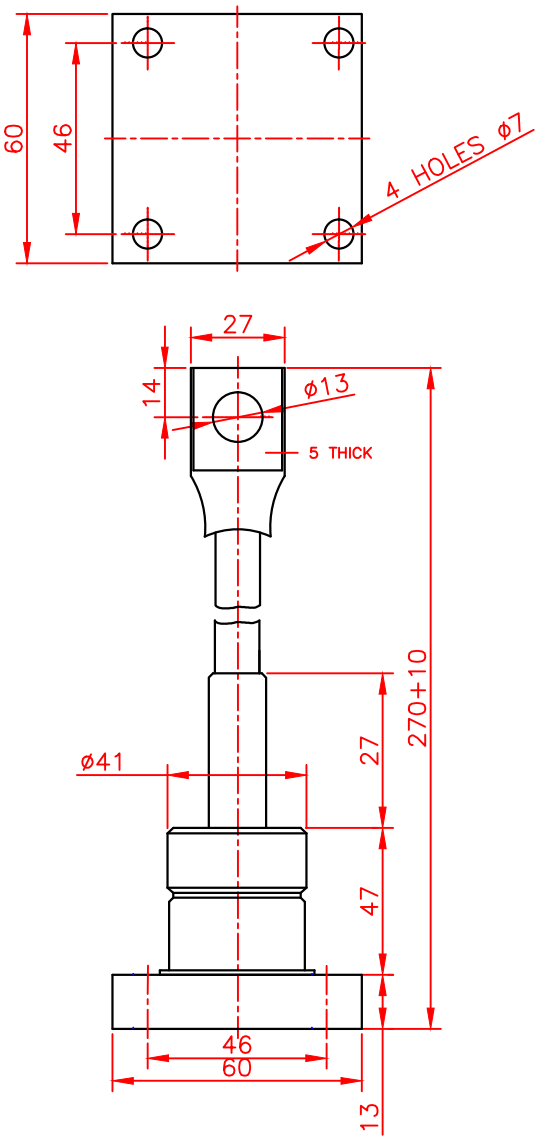

Type - 2 Devices (Three Variants)

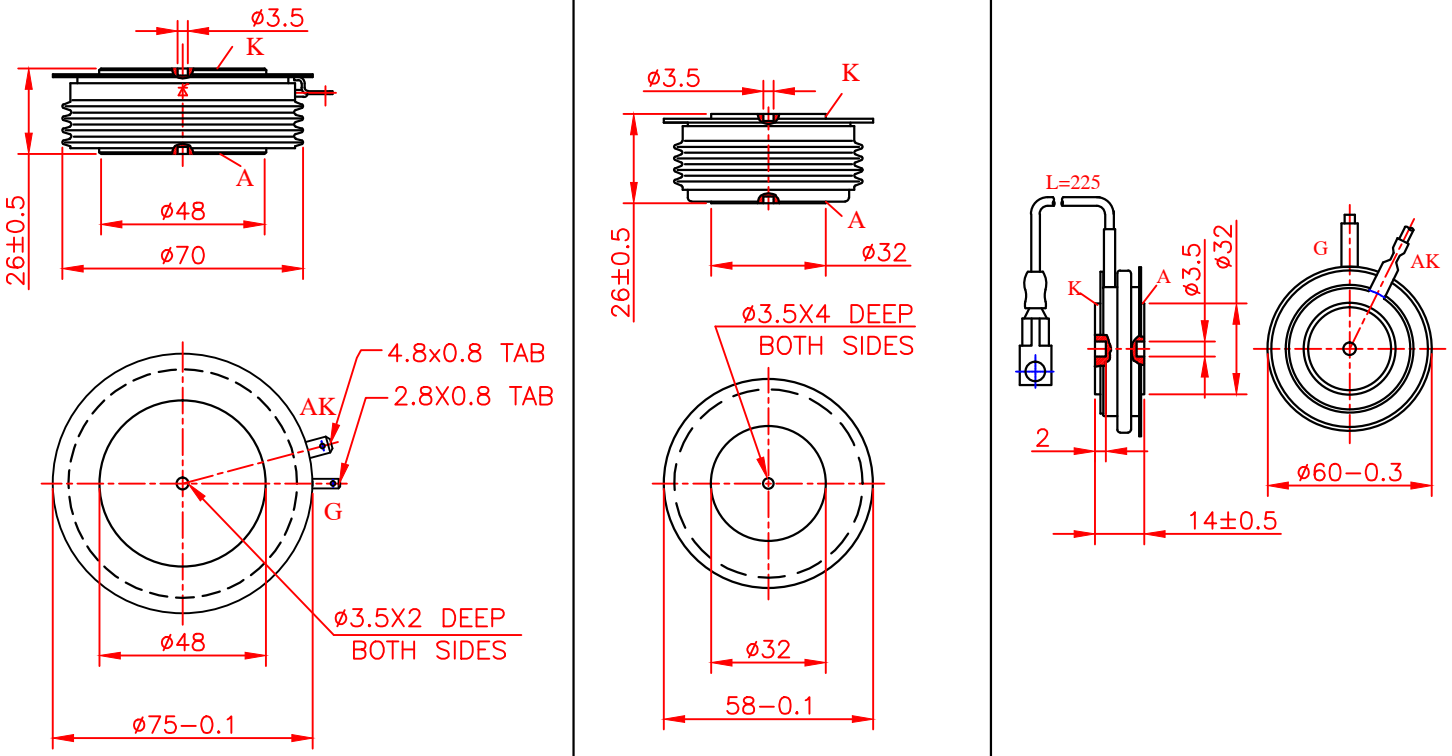

Note: This is schematic drawing only

TYPE OF PRODUCT OR
NAME OF CUSTOMER/PROJECT

BHARAT HEAVY ELECTRICALS LIMITED.
ELECTRONICS DIVISION, BANGALORE

	NAME	SIGN.	DATE	No. OF VAR
DRN	NAR	sd/	210610	
CKD	NHK	sd/	240610	
APPD	SS	sd/	240610	

REV.	DATE	ALTERED / CHECKED / APPROVED
00		FIRST ISSUE

DEPT. SC&PV
CODE 438
FOR UNSPECIFIED-TOLERANCES REFER ED 0230499
SCALE NTS
WEIGHT(Kg)
REF. TO ASSY. DRG.
ITEM NO.
No. OF ITEM

TITLE
OUTLINE DRAWING OF TYPE-1 & TYPE-2 DEVICES

DRAWING NO. 3 679 03 00451
REV. 00
SHEET NO. 01
NO. OF SHEETS 01

REF. DRG.NO.
SIGN & DATE
INVENTORY NO.

FORM No. A3-02

A3 SIZE