VOLUME – IA
Part I & II

TECHNICAL CONDITIONS OF CONTRACT (TCC)

BHARAT HEAVY ELECTRICALS LIMITED

CONTENTS

Sl no	DESCRIPTION	Chapter	No. of Pages
Vol I A	**Part-I: Contract specific details**		
1	Project Information	Chapter-I	1
2	Scope of works	Chapter-II	3
3	Facilities in Scope of Contractor / BHEL (Scope Matrix)	Chapter-III	7
4	T&Ps and MMEs to be deployed by Contractor	Chapter-IV	6
5	T&Ps and MMEs to be deployed by BHEL on sharing basis	Chapter-V	1
6	Time Schedule	Chapter-VI	3
7	Terms of Payment	Chapter-VII	2
8	Taxes and Duties	Chapter-VIII	2
9	Bill of Quantity	Chapter-IX	1
10	General	Chapter-X	10
11	Progress of Work	Chapter-XI	2
12	Material Handling	Chapter-XII	1
13	Accounting of Material Issue	Chapter-XIII	7
Vol I A	**Part-II**		
1	Corrections/ Revisions in SCC GCC Forms and Procedures	Chapter-1	18
2	Drawings	Chapter-2	14
3	Bore log details	Chapter-3	313
4	Technical Specifications	Chapter-4	546
5	Technical Specification and drawings for Labour Colony	Chapter-5	10
6	T&P Hire Charges	Chapter-6	14
7	HSE Plan For Site Operations By Subcontractor	Chapter-7	82
8	Procedure for conduct of Conciliation	Chapter-8	11
9	Proforma of Bank Guarantee (in lieu of Earnest Money)- Form WAM 23	Chapter-9	03
10	Proforma of Bank Guarantee (in lieu of Security Deposit)- Form WAM 22	Chapter-10	03
11	Format for Form no.: F-14 (Rev 01); Monthly Plan and Review with Contractors	Chapter-11	06
12	Format for Form no.: F-15 (Rev 02); Monthly Performance Evaluation of contractor	Chapter-12	06

VOLUME - IA PART – I CHAPTER – I
PROJECT INFORMATION

5 x 800 MW Yadadri Thermal power station is being set up by **TELANGANA STATE GENERATION CORPORATION** at a site in Veerlapalem village, Dameracherla Mandal, NALGONDA DISTRICT, TELANGANA STATE, India. The Bidder shall acquaint himself by a visit to the site, if felt necessary, with the conditions prevailing at site before submission of the bid. The information given here in under is for general guidance and shall not be contractually binding on BHEL/Owner. All relevant site data/ information as may be necessary shall have to be obtained/ collected by the Bidder.

A. PROJECT INFORMATION

1	Name of the Project	YADADRI Thermal Power Station
2	Station Capacity	5X800 MW (Coal based)
3	Owner	Telangana State Power Generation Corporation Limited (**TSGENCO**)
4	Site Location	Site is located 7 km from the SH 2 Miryalaguda - Vadapalle Highway.
5	Latitude	*16° 42'* 20.40 N
6	Longitude	79° 34' 41.56 E
7	Nearest Town	30 Km Miryalaguda
8	Nearest Railway Station	6.5 Km Damercherla
9	Nearest Airport	130 Kms (Vijayawada)
10	**Site Conditions**	
	Ambient Temperature	
	Daily minimum (average)	10°C
	Daily maximum (average)	47°C
	Design Ambient Temperature	50°C
	Ambient temperature (performance)	38°C
	Relative Humidity for design / efficiency	48-84 %
	Annual rainfall, mm	600 mm
	Plant Elevation above MSL	85 m above MSL
	Mean Wind Speed	8 km/h
	Wind Pressure	As per the latest revision of IS 875/1987
	Seismic co-efficient	Zone-II as per IS- 1893 (Part-IV)

VOLUME-IA PART-I CHAPTER – II
SCOPE OF WORKS

(All the works mentioned hereunder shall be carried out within the accepted rate unless otherwise specified.)

1.2.1 The scope of works covers Civil works of the foundations, raft, columns & decks (as applicable) of Turbo-Generators (T.G.) other miscellaneous foundations of Unit 4&5 of 5 x 800MW Yadadri TPS as mentioned below, including supply of all materials (excluding Cement & Reinforcement steel), labour, tools and plants. The scope of work is indicative but not limited to the given below.

The subject tender consists of 1 packages – and the list of structures and buildings is mentioned below.

AREAS OF WORK

1. TG columns & deck – Unit 4
2. TG Raft, Column & deck – Unit 5

Note:

The available approved drawing for staging of TG deck is also provided by BHEL under Volume-IA Part-II Chapter-2. The exhaustive list of scaffolding materials required for 1 no. of TG Deck is provided in table no 1 below"

TABLE No. 1

TG DECK SCAFFOLDING MATERIAL LIST TG-1

SI NO.	DESCRIPTION	Required Qty	UNIT
1	**3 Mtr length vertical cup lock pipe** Tech Spec: 40NB medium pipe @3.56kg/m, YST:250 NB=40.00mm, OD=48.30mm & Thickness of pipe=3.2mm	15000	Nos
2	**2.5Mtr length vertical cup lock pipe** Tech Spec: 40NB medium pipe @3.56kg/m, YST:250 NB=40.00mm, OD=48.30mm & Thickness of pipe=3.2mm	1200	Nos
2	**1.5Mtr length vertical cup lock pipe** Tech Spec: 40NB medium pipe @3.56kg/m, YST:250 NB=40.00mm, OD=48.30mm & Thickness of pipe=3.2mm	650	Nos
3	**0.6 Mtr length Ledzer pipe** Tech Spec: 40NB medium pipe @3.56kg/m, YST:250	97000	Nos
4	**0.6 Mtr** length **MS pipe (Column supporting)**	1920	Nos
7	**Base jack** (32mm dia Screw jack Solid type)	3100	Nos
8	**U - Jacks 32mm dia Solid (450mm length)** Size: (100X75X100mm)	3100	Nos
9	**MS bracing 40mm** light weight 6Mtr length pipe	1500	Nos
10	**Spigon joint pipe 200mm** length with connecting pin	14370	Nos
11	**Swievel clamps**	3520	Nos
12	**Fixed clamps**	3500	Nos
13	**Prop Jocks/Telescopic Props**	1000	Nos

However, the materials which are required over and above the list specified in table no.1 shall be arranged by the bidder without any additional cost.
Alternatively, the bidder may carry out their own staging design for the TG deck and columns as per the drawings provided along with the tender and shall submit for approval by BHEL/TSGENCO.

Note: The above provided list is indicative only for the bidder's guideline. **Any other building / structure / foundation not mentioned above, but required for completion of the package in total, deemed to have been included in the bidder scope under this contract.** Such work will be executed under this contract by bidder as per the direction of Engineer in charge. If any item of work not available in the rate schedule of this contract, the rate will be fixed in line with the provision mentioned in clause 2.15.7 of GCC.

Cement & Reinforcement steel for civil works shall be provided by BHEL free of cost. Any structural steel required for embedments/ inserts (other than those supplied by BHEL) shall be in the scope of bidder and shall be paid in relevant items of BOQ.

Unit 4 TG raft completed and reinforcement of sixteen (16) columns completed up to first lap as per attached approved drawing.

Unit 5 TG raft PCC completed and approximately 75 MT of steel placement and binding is completed and total requirement of 440 MT of bar bending completed and readily available for placement. Contractor shall make use of these readily available material for works and rate shall be considered in the relevant in BOQ.
Bidder shall do the bar bending and binding work as per the items provided in the rate schedule.

Bidder shall be paid only for the reinforcement placed by them as per the rate schedule. The bidder shall not claim any payment for the reinforcements already placed in position. Also, it is the responsibility of the bidder to place their reinforcement and fix them with the reinforcement already placed as per the requirement of the specification. Any bending required for correction in alignment of the already placed reinforcement to make their reinforcement in correct position is the responsibility of the bidder.

1.2.2 The works to be performed under this contract consist of providing all labour, supervision, material, construction equipment, tools and plants, temporary works, supplies including Petrol, Oil, Lubricants, transportation and all incidental items not shown or specified but reasonably implied or necessary for the proper

completion of work in all respects. Testing of all materials, earthwork other allied works preparation of bar bending schedules on the basis of construction drawings, preparation of design and drawings for STG deck staging and shuttering etc.are included on the rates of items of work.

1.2.3 The area of work shall be cleared of all vegetation, rubbish and other objectionable matter and materials removed shall be burnt or otherwise disposed of as directed by the Engineer-in-Charge. No separate payment for these operations shall be made. The cost of all these operations shall be deemed to have been included in the unit rates derived for the different items under bill of quantities.

1.2.4 All the works areas shall be adequately flood lighted to the satisfaction of the Engineer-in-Charge when the work is in progress during the night shifts.

1.2.5 The unit rates shall include all material equipment, fixtures, labour, construction plant, temporary works and everything whether of permanent or temporary nature necessary for the completion of job in all respects.

1.2.6 The unit rates derived for various items of B.O.Q shall include all the stipulations mentioned in technical specifications and nothing extra over B.O.Q rates shall be payable.

1.2.7 Drawings showing enough details for the construction as per the specification, if any shall be furnished to the contractor in a phased manner.

1.2.8 The bidder should fully apprise himself of the prevailing conditions at the proposed site, climatic conditions including monsoon pattern, local conditions, soil strata and site specific parameters and shall include for all such conditions and contingent measures in the bid, including those which may have not been specifically brought out in the specifications.

1.2.9 The scope includes the pedestals casting including bolt lift and plinth beam if any above foundation and backfilling & compaction. In case of building, which have no bolts in the column/ pedestals and the columns extends beyond FGL, extending pedestals/ columns, casting tie beams up to FGL and backfilling, compaction is in the scope of bidder. However, decision of BHEL/ Engineer In-Charge is final in finalizing the execution level of pedestals/ columns and tie beams / plinth beams above or below FGL and backfilling work according to the site condition.

VOLUME IA PART – I CHAPTER – III

FACILITIES IN THE SCOPE OF CONTRACTOR / BHEL

(SCOPE MATRIX)

Sl.No	Description	Scope to be taken care by		Remarks
	PART I	BHEL	Bidder	
1.3.1.1.0	**ESTABLISHMENT**			
1.3.1.1.1	FOR CONSTRUCTION PURPOSE:			
A	Open space for office	Yes		
B	Open space for storage	Yes		
C	Construction of bidder's office, canteen and storage building including supply of materials and other services		Yes	
D	Bidder's all office equipments, office / store / canteen consumables		Yes	
E	Canteen facilities for the bidder's staff, supervisors and engineers etc		Yes	
F	Firefighting equipments like buckets, extinguishers etc		Yes	
G	Fencing of storage area, office, canteen etc of the bidder		Yes	
1.3.1.1.2	FOR LIVING PURPOSES OF THE BIDDER			
A	Open space	Yes		
B	Living accommodation		Yes	
1.3.1.2.0	**ELECTRICITY**			
1.3.1.2.1	Electricity For construction purposes (to be specified whether chargeable or free)	Yes		Free as provided by TSGENCO
1.3.1.2.1.1	Single point source	Yes		
1.3.1.2.1.2	Further distribution for the work to be done which include supply of materials and execution		Yes	
1.3.1.2.2	Electricity for the office, stores, canteen etc of the bidder which include:		Yes	

Sl.No	Description PART I	Scope to be taken care by		Remarks
		BHEL	Bidder	
1.3.1.2.2.1	Distribution from single point including supply of materials and service		Yes	
1.3.1.2.2.2	Supply, installation and connection of material of energy meter including operation and maintenance		Yes	
1.3.1.2.2.3	Duties and deposits including statutory clearances for the above		Yes	
1.3.1.2.2.4	Demobilization of the facilities after completion of works		Yes	
1.3.1.2.3	Electricity for living accommodation of the bidder's staff, engineers, supervisors, labour colony etc on the above lines.		Yes	
1.3.1.3.0	**WATER SUPPLY**			
1.3.1.3.1	For construction purposes:	Yes		Free as provided by TSGENCO
1.3.1.3.1.1	Making the water available at single point	Yes		As provided by TSGENCO
1.3.1.3.1.2	Further distribution as per the requirement of work including supply of materials and execution		Yes	
1.3.1.3.2	Water supply for bidder's office, stores, canteen, labour colony etc		Yes	
1.3.1.3.2.1	Making the water available at single point		Yes	
1.3.1.3.2.2	Further distribution as per the requirement of work including supply of materials and execution		Yes	
1.3.1.4.0	**LIGHTING**			
1.3.1.4.1	For construction work (supply of all the necessary materials) At office storage area At the preassembly area At the construction site / area		Yes	

Sl.No	Description PART I	Scope to be taken care by		Remarks
		BHEL	Bidder	
1.3.1.4.2	For construction work (Execution of the lighting work / arrangements) At office storage area At the preassembly area At the construction site /area		Yes	
1.3.1.5.0	**COMMUNICATION FACILITIES for site operations of the bidder**	**-**		
1.3.1.5.1	Telephone, Fax, internet, intranet, email etc		Yes	

Sl. No.	Description PART II	Scope to be taken care by		Remarks
		BHEL	Bidder	
	CONSTRUCTION FACILITIES			
1.3.2.1.0	**Engineering works for construction**			
1.3.2.1.1	Providing the construction drawings for all the equipment's covered under this scope	Yes		
1.3.2.1.2	Drawings for construction methods		Yes	Subject to BHEL approval
1.3.2.1.3	As-built drawings – wherever deviations observed and executed and also based on the decisions taken at site- example – routing of small bore pipes	Yes	Yes	”
1.3.2.1.4	Shipping lists etc. for reference and planning the activities	Yes	Yes	”
1.3.2.1.5	Preparation of site construction schedules and other input requirements		Yes	In consultation with BHEL, As per requirement of BHEL targets
1.3.2.1.6	Review of performance and revision of site construction schedules in order to achieve the end dates and other commitments		Yes	

Sl. No.	Description PART II	Scope to be taken care by		Remarks
		BHEL	Bidder	
1.3.2.1.7	Weekly construction schedules based on Sl No 1.3.2.1.5		Yes	
1.3.2.1.8	Daily construction / work plan based on Sl No 1.3.2.1.7		Yes	For daily monitoring meeting at site
1.3.2.1.9	Periodic visit of the senior official of the bidder to site to review the progress so that works is completed as per schedule. It is suggested this review by the senior official of the bidder should be done once in every two months.		Yes	
1.3.2.1.10	Preparation of preassembly bay			**Not applicable**
1.3.2.1.11	Laying of racks for gantry crane if provided by BHEL or brought by the contractor / bidder himself			**Not applicable**

1.3.3 OPEN SPACE:

Availability of land within plant boundary is very limited and the contractor has to plan and use the existing land considering the use of land by other Civil /mechanical/ electrical contractors and the storage of plant machineries and materials. The existing land shall be shared by all erections agencies. Land will be allocated with certain time frame and to the extent available/ considered necessary, and will be reviewed by BHEL depending upon the area availability. Area within plant premises for office, storage area etc. for construction purpose shall be provided as per availability free of cost. The contractor will be responsible for handing over back all lands, as handed over to him by BHEL.

Land for labour colony shall be provided by BHEL approximately nearer to site (outside plant premises) free of cost as provided by TSGENCO. The contractor to construct labour colony/ hutment as per the technical specification No.PSSR/PMX/CVL/Labour colony/01, Rev-00 enclosed along with this tender. The contractor shall provide adequate water arrangement for drinking/ washing/ bathing with required toilets, drainage system, and electrification etc. in labour colony at his own cost. Suitable paved area to be provided in the labour colony at the cost of contractor.

1.3.4 ELECTRICITY:

1.3.4.1 Construction power will be provided to the contractor free of cost (as provided by TSGENCO) at one single point within the plant area by BHEL. The contractor to Provide necessary meter for measuring the power consumption. The contractor shall make his own arrangement for further distribution with necessary isolator/LCB etc.

1.3.4.2 Necessary "Capacitor Banks" to improve the Power factor to a minimum of 0.9 shall be provided by the contractor at his cost. Penalty of any nature, if any, levied by customer on the account of construction power provided to contractor, will be recovered from contractor's bills.

1.3.4.3 Any duty, deposit involved in getting the Electricity shall be borne by the bidder. As regards contractor's office shed also all such expenditure shall be borne by the contractor.

1.3.4.4 Provision for distribution of electrical power from the given single central common point to the required places with proper distribution boards, approved cables and cable laying including supply of all materials like cables, switch boards, pipes etc., observing the safety rules laid down by electrical authority of the State / BHEL / their customer with appropriate statutory requirements shall be the responsibility of the tenderer / contractor.

1.3.4.5 BHEL is not responsible for any loss or damage to the contractor's equipment as a result of variations in voltage / frequency or interruptions in power supply.

1.3.4.6 Contractor has to make their own arrangements for electricity requirement for labour colony at their cost.

1.3.4.7 As there are bound to be interruptions in regular power supply, power cut/ load shedding in any construction sites, contractor should make his own arrangement for alternative source of power supply through deployment of adequate number of DG sets at their cost during the power breakdown / failure to get urgent and important work to go on without interruptions. No separate payment shall be made for this contingency.

1.3.5 WATER:

1.3.5.1 Water (Raw water) required for construction purposes will be provided at one single point within the plant area free of cost. The required pumps & accessories, pipes for drawing water from the given point and further distribution will be arranged by the contractor at their cost to go on without interruptions.

1.3.5.2 In case non-availability of water, the contractor shall make his own arrangements of water suitable for construction purpose to have uninterrupted

work. No separate payment shall be made for any contingency arrangement made by contractor, due to delay / failure for providing water supply.

1.3.6 MATERIAL SUPPLY:

Supply / providing aggregate, sand (river sand only) and all other materials required (except free supply materials i.e. cement, reinforcement steel, manufacturing unit supplied foundations bolts) for the work are in the scope of the contractor. BHEL shall provide Cement, reinforcement steel & structural steel (only for structural works, if any required) for civil works only for incorporation in the permanent work AS FREE SUPPLY.

Structural steel required for embedment's/ inserts (other than those supplied by BHEL) shall be in the scope of bidder and shall be paid as per relevant BOQ items. In case of extreme urgency, structural steel for embedments/ inserts, also will be supplied by BHEL and payment shall be regulated as per relevant BOQ items.

Regarding supply of cement, the cement shall be provided normally in bulkers and shall be unloaded in the silos (2 Nos minimum 100MT each per 30 Cum batching plant) to be installed by the bidder nearer to their batching plants. This is only minimum requirement and the No of cement silos shall be increased based on the site requirement. On advance request of the bidder, the cement shall be supplied in Bags for other than RCC works like masonry, flooring works etc.

The steel material will be issued from BHEL stores, within the plant premises. Collection and transporting to the place of work is in contractor's scope without any extra cost to BHEL. The steel will be issued to the agency in standard lengths. In some instances, for 8mm, 10mm &12mm dia reinforcement steel will be supplied in coil form. No extra claims will be entertained against issue of Non-standard lengths of steel and de coiling of 8mm, 10mm &12mm dia. steel.

If any matching sections of steel are not available with BHEL, contractor may arrange these sections on certification of BHEL and the landing cost of sections to site will be reimbursed based on the prevailing rate at SAIL at the time of procurement at the nearest SAIL outlet with the freight charges against supporting document.

1.3.7 CONSUMABLE

All consumables, like gas, electrodes, chemicals, lubricants etc. required for the scope of work, shall be arranged by the contractor at his cost unless otherwise specifically mentioned in the contract.

In the event of failure of contractor to bring necessary and sufficient consumables, BHEL may arrange for the same at the risk and cost of the contractor. The entire cost towards this along-with overhead shall be paid by the contractor or deducted from the contractor's bills.

1.3.8 LIGHTING FACILITY:

Adequate lighting facilities such as flood lamps, hand lamps and area lighting shall be arranged by the contractor at the site of construction, and contractor's material storage area etc. at his cost.

1.3.9 CONTRACTOR'S OBLIGATION ON COMPLETION:

On completion of work, all the temporary buildings, structures, pipe lines, cables etc. shall be dismantled and leveled and debris shall be removed as per instructions of BHEL by the contractor at his cost. In the event of his failure to do so, the expenditure towards clearance of the same will be recovered from the contractor. The decision of BHEL Engineer in this regard is final.

1.3.10 DEWATERING

Contractor shall ensure at all times that his work area & approach/ access roads are free from accumulation of water, so that the materials are safe and the erection/ progress schedule are not affected. No separate claim in this regard shall be admitted by BHEL. No separate payments for dewatering of subsoil, surface water or catchments water, if required, at any time during execution of the work including monsoon period shall be considered by BHEL.

1.3.11 BID DRAWINGS

Bid drawings like plot plan or Layout plan enclosed along with this tender is only for information and may not be referred for scope of works and this may also get revised during execution.

VOLUME-IA PART-I CHAPTER – IV

T&PS and MMEs TO BE DEPLOYED BY CONTRACTOR

1.4.1 All the tools and plants required for satisfactory completion of the work have to be arranged by the contractor.

1.4.2 The contractor is required to arrange the following tentative T&Ps and any other required T&Ps for the satisfactory completion of the work.

Sl No	T&P items	Mobilizing time from the date of commencement of work at site
1	Automatic concrete batching plant with printing facility (30 Cum/Hr) with DG backup. With minimum 2 Nos of silo (100MT each) per batching plant	Adequate no. of batching plants may be arranged by the bidder either by tying up with existing BHEL approved batching plants within the site premises or may be directly established by the bidder at site as per the site requirement.
2	2 Nos Truck mounted concrete mixer cum pump along with placing boom minimum 36 m high i.e. Concrete boom placer (36m)	As per site requirement.
3	2 nos. concrete pump (60 cum/ hr min capacity & lift 90M)	As per site requirement.
4	10 nos. transit mixer (5/6 M3 capacity) with standby 2 nos.	As per site requirement.
	Other T&Ps	**Mobilizing time from the date of start of work**
5	5 nos. self-priming dewatering pump 5 HP (diesel)	As mutually agreed between contractor and BHEL Engineer In-Charge
6	5 nos. self-priming dewatering pump 5 HP (electric)	As mutually agreed between contractor and BHEL Engineer In-Charge
7	8 nos. curing pump – 1.5 /2 HP (pump for curing at heights)	As mutually agreed between contractor and BHEL Engineer In-Charge
8	8 nos. reinforcement bending machine	3 nos. within 20 days, another 3 nos. within 45 days and balance

		progressively as per BHEL requirement at site
9	8 nos. reinforcement cutting machine	3 nos. within 20 days, another 3 nos. within 45 days and balance progressively as per BHEL requirement at site
10	2 nos. mobile crane/hydra of 12/14MT	As per site requirement.
11	Construction water Pipeline (100mm/ 75mm/ 32mm/ 25mm dia GI Pipe)	As per site requirement.
12	2 sets of MS scaffolding pipe / ACROW PIPE to take care of TG raft (unit 5) columns (unit 4 & 5) and TG decks (unit 4 & 5).	As per site requirement.
13	2 sets of MS scaffolding pipe cup lock system/ Doka D3 load bearing tower system to take care of both the TG Decks (Unit no 4 & 5) simultaneously. (exhaustive list of scaffolding materials required for TG Deck is provided in table no.1 in Volume-IA Part-I Chapter – I)	As per BHEL requirement at site for taking up 2 nos of TG decks (unit 4 & unit 5) work simultaneously.
14	Civil laboratory equipment's as per list IN Sl 1.4.4.2 with temporary building one AC lab size 4.5mtrx6mtr and 1 non AC lab 4.5 mtrx4.5 mtr.	Civil laboratory may be arranged by the bidder either by tying up with existing BHEL approved laboratories within the site premises or may be directly established by the bidder at site as per the site requirement.
15	2 no total station with adequate arrangement for Surveyors.	As per site requirement.
16	2 no theodolite 1 second accuracy	As per site requirement.
17	7 no's auto level & staff	As per site requirement
18	240 no's concrete cube moulds	Progressively as per BHEL requirement at site
19	Adequate no. of small trucks 2T/5T for shifting of	As per BHEL requirement at site

	reinforcement/cement/ shuttering etc. within site	
20	4 nos. drinking water tank – 5000 lit.	1 nos. Within 30 days. Balance as per BHEL requirement at site.
21	4 nos. mobile toilets for labour use.	2 no's within 30 days, another 1 nos within 75 days and balance as per BHEL requirement at site.
22	2 nos. truck mounted 125 KVA DG set	1 no. within 30 days and balance as per BHEL requirement at site
23	Construction power cable	As per Requirement
24	Construction water Pipeline	As per Requirement
25	1 no. trailor for shifting of crawler mounted equipment's like Poclain, Dozer	As per BHEL requirement at site.
26	Concrete vibrator with adequate needle (Minimum 20 nos diesel/power nos.)	6Nos (at least 3nos. diesel driven) within 45 Days. Balance as per BHEL requirement at site.
27	Portable fire extinguishers as below: Soda acid – 10 sets. Dry chemical powder – 10 sets CO2 – 10 sets. Water & sand bucket (4 buckets in one stand) – 10 sets. Fire hose with nozzle (50 M length) – 5 sets.	25% within 30 days and balance progressively within 90 days.

Note:

1. T&P and the mobilization schedule shown in the above mentioned list is tentative requirement considering parallel working. However, Mobilization schedule and quantity/ numbers of T & Ps, and period of deployment as mutually agreed at site for major T&Ps, have to be adhered to. Numbers/ time of requirement will be reviewed time to time at site and contractor will provide required T&P/ equipment's to ensure completion of entire work within schedule/ target date of completion without any additional financial implication to BHEL. Vendor will give advance intimation & certification regarding capacity etc. prior to dispatch of heavy equipment's. Also on completion of the respective activity, demobilization of T&P in total or in part can be done with the due approval of engineer in charge. Retaining

of the T&P's during the contract period will be mutually agreed in line with construction requirement.

2. All T&P and all IMTEs, which are required for successful and timely execution of the work covered within the scope of this tender, shall be arranged and provided by the contractor at his own cost in working condition.

3. In the event of contractor failing to arrange the required tools, plants, machineries, equipment, material or non-availability of the same owing to breakdown, BHEL will make alternative arrangement at the risk and cost of the contractor.

   Case 1: BHEL provides its own Capital T&P.
   In case the BHEL provides any T&P which is owned by BHEL, hire charges (as per BHEL norms) will be recovered from the contractor as per the prevailing BHEL corporate hire charges. In case, the T&P is specifically listed in "T&Ps to be deployed by Contractor", "Hire charges applicable to outside agencies other than contractors working for BHEL" will apply. If not listed, "hire charges applicable to contractor working for BHEL" will apply. The hire charges of Capital tools & plants are exclusive of operating expenses e.g. operator, fuel & consumables and the same shall be arranged by the contractor at his cost.

   Case 2: In all cases other than that specified in case 1 above, actual expenses incurred by BHEL along with applicable overheads will be back-charges to the contractor.

4. In the event of need of change of type of any of major T&Ps, approval shall be taken from BHEL Engineer in-charge prior to mobilization. The decision of Number of T&P required due to replacing the enlisted T&P as per above table, shall be taken after analyzing the production capacity and suitability of both the T&Ps.

5. Chapter - VI of this specification (i.e. TCC) shall be referred for date of start of work.

6. Mobilization of concrete boom placer in place of concrete pump will be allowed based on site requirement of BHEL.

1.4.3 In addition to the above, any other tools and plants required for execution of the above work are in contractor's scope.

1.4.4 The Bidder shall establish and maintain a field laboratory at the site and this laboratory shall be available at all time for testing.

1.4.4.1 The laboratory must have qualified technicians to carry out all tests and must be adequately equipped to ensure that all necessary testing work can carried out in compliance with the standards.

1.4.4.2 Field and laboratory testing procedures for materials follow Indian Standard Specifications with necessary equipment as mentioned therein.

CONCRETE TESTING EQUIPMENT				
Sl. No	**NAME OF TEST**	**NAME OF EQUIPMENT**	**SIZE OF EQUIPMENT**	**IS REF.**
1	Initial & final setting time, Consistency of cement	Vicat Apparatus with desk pot	Standard	IS 5513
2	Shrinkage of cement, Auto Clave Test	Le Chatelier's apparatus Auto Clave Equipment	Standard	IS 5514
3	Abrasion value test	Los Angeles Abrasion testing machine	Standard	IS 2386
4	Aggregate Impact value test	Aggregate Impact value testing machine with blow counter	Standard	IS 9377
5	Aggregate crushing value test	Crushing value apparatus	Standard	IS 2386
6	Flakiness index	Thickness gauge for measuring flakiness index	Standard	IS 2386
7	Elongation Index	Elongation gauge	Standard	IS 2386
8	Bulk density, voids and bulking apparatus	Measuring cylinders	3, 5,10 & 15 liters cylinders	
9	Workability of concrete	Slump cone	Standard, at least 04 no's	IS 456
10	Specific gravity of aggregates	Pycnometer	Standard, at least 02 no's	IS 383
11	Cement mortar cube vibrating	Motorised vibration machine for cement testing	Standard	IS 4031
12	Coarse aggregate Sieve analysis (Concrete & Road Works)	Sieve set	450mm dia GI Frames Size: 125mm, 90 mm, 75mm, 63mm, 53mm, 40mm, 20mm, 16mm, 12.5mm, 10mm, 4.75mm, Pan and cover	IS 383

13	Fine aggregate sieve analysis	Sieve set	200mm dia Brass sieves; Size 4.75mm, 2.36mm, 1.18mm, 600micron, 300micron, 150micron, 75micron, 75micron, Pan and cover	IS 383
14	Sieve Shaker	Motorised Sieve shaker	Mfg. Catalogue	
15	Silt content check	Sand silt content beaker	Standard	

1.4.5 Contractor shall have at all times experienced operators and technicians for routine and breakdown maintenance of the equipment. Any delay in rectification of defects will warrant BHEL rectifying the defect and charging the cost to the contractor.

1.4.6 In construction projects of this magnitude, all the areas / approaches may not be ready. In such cases consolidation of ground and arrangement of sleepers / sand bag filling etc for safe operation / movement of equipment including cranes / trailers etc shall be the responsibility of the contractor at his cost. No compensation on this account shall be payable.

1.4.7 In general, any crane for the tendered work will not be provided by BHEL. However, if requirement of crane of higher capacity arises for any unforeseen circumstance (i.e. more than 150MT), bidder may request BHEL to provide crane on chargeable basis but BHEL reserves right of provision of crane. If provided, in that case, Crane operators deployed by the contractor shall be tested by BHEL before they are allowed to operate the cranes.

1.4.8 Crane operators deployed by the contractor shall be tested by BHEL before they are allowed to operate the cranes.

1.4.9 The age of the contractor deployed cranes upto 150 T should be within 15 years as on date of deployment. Contractor has to provide documentary proof for the age of the crane at the time of deployment to the BHEL Engineer.

1.4.10 In case, cement is issued through bulkers being supplied from manufacturer /stockiest, the same shall be emptied in cement silos of batching plant and necessary assistance shall be provided by contractor. Contractor to note that batching plant being established at site shall have cement silos of 100 MT capacities each as mentioned in clause 4.2.B- list of Tools & Plants to be deployed by the contractor.

VOLUME-IA PART-I CHAPTER - V
T&Ps AND MMEs TO BE DEPLOYED BY BHEL ON SHARING BASIS

1.5.1 BHEL shall not provide any T&Ps. However, if in any unforeseen circumstances, requirement of any T&Ps (available with BHEL at site) arises, on request of bidder the same may be provided on chargeable basis as applicable. BHEL reserves the right of provision of such T&Ps.

VOLUME-IA PART-I CHAPTER - VI
TIME SCHEDULE

1.6.1 TIME SCHEDULE

1.6.1.1 The date of commencement of work at site shall be mutually agreed between successful bidder and BHEL Site In-Charge.

1.6.1.2 The entire scope of the package shall be completed within **12 (Twelve) months** from the date of commencement of work.

1.6.1.3 During the total period of contract, the contractor has to carry out the activities in a phased manner as required by BHEL and the program of milestone events.

1.6.1.4 The contractor is required to refer Form 15 in Volume 1A Part II TCC for all the actions to be taken immediately after receipt of LOI.

1.6.2 MOBILISATION

1.6.2.1 The Contractor has to augment his resources in a prudent manner to achieve the completion of work as per the site requirement.

1.6.2.2 The above time allowed for completion of work including Sundays and Holidays is from the date of commencement of work. Detailed program to be prepared by the tenderer taking in to consideration of the COMPLETION SCHEDULES /site decision on drawings flow (latest) and submitted for BHEL's approval.

1.6.2.3 In order to meet above schedule in general, and any other intermediate targets set, to meet customer / project schedule requirements, contractor shall arrange & augment all necessary resources from time to time on the instructions of BHEL within the quoted rate.

1.6.2.4 In case the project is to be advanced, the civil works in the scope of the contractor is to be advanced to meet the project requirement. No extra payment whatsoever shall be paid on this account.

1.6.3 SUBMISSION OF L3 SCHEDULE

The contractor shall submit and a detailed area/structure wise L3 schedule within 15 days in consultation with BHEL based on the tentative schedule provided as per the clause 1.6.4. The detailed L3 schedule shall be approved by BHEL and same shall be implemented.

Bidder shall submit L3 schedule to meet the agreed project schedule covering various milestone activities and their split up details such as construction, procurement of materials, fabrication & erection activities. This schedule shall also clearly indicate the interface facilities/ inputs to be provided by BHEL/

Customer and the dates by which such facilities/inputs are required. The schedule shall be acceptable to BHEL for meeting their mile stone targets/schedule.

1.6.4 CIVIL WORKS SCHEDULE

Sl No	Description	Completion month from the date of commencement of civil work
	TG- Unit#4	
1	TG- Columns	3rd month
2	TG Desk Casting	6th month
3	Removal of Staging materials	9th month
	TG- Unit#5	
1	TG-raft	2nd month
2	TG- Columns	5th month
3	TG Desk Casting	8th month
4	Removal of Staging	11th month
5	Completion of balance works & submission of final bill	12th month

1.6.5 The above schedule is tentative. In case the project is to be advanced, the civil works in the scope of the contractor is to be advanced to meet the project requirement. No extra payment whatsoever shall be paid on this account.

The above schedule is for entire completion and handing over the structure (i.e. foundations, raft, deck, etc.)/ Building to BHEL.

The foundations, pedestals, decks, etc, required for the mechanical equipment erection/ structural erection shall be handed over to BHEL progressively within the scheduled period given in the above table, as per the BHEL site requirement.

The left out minor finishing works shall also be completed and handed over to BHEL within the contract period.

1.6.6 The bidder must submit a detail schedule (area wise) for completion of work to meet civil work schedule given in Clause 1.6.4 within 15 days from the date of issue of LOI.

1.6.7 The major activities as mentioned against the work schedule given in clause No. 1.6.4 are to be indicated in detailed schedule which will be prepared by the
bidder.

1.6.8 MAJOR INTERMEDIATE MILESTONES

1.6.8.1 The following intermediate milestones shall be applicable for this work.

Sl. No.	Description	Completion month from the date of start of the work at site	Intermediate Milestone
1	TG deck casting for unit#4	6th month	M1
2	TG deck casting for unit#5	8th month	M2

Note: Please refer Sl. No:7, Part-II, Chapter-1 of Technical Conditions of Contract (Volume 1A of Volume I Book I) for Penalty for Intermediate Milestones

1.6.9 GUARANTEE PERIOD

Guarantee period of 12 months shall commence from the date of completion of the whole of the work certified by the Engineer in-charge.

VOLUME-IA PART-I CHAPTER - VII
TERMS OF PAYMENT

1.7.1 SECURED ADVANCE

Not Applicable

1.7.2 ADVANCE FOR MOBILIZATION

Not Applicable

1.7.3 INTERIM PAYMENT

1.7.3.1 Interim bills in the form of monthly running bills prepared by the contractor in soft as well as Hard copies shall be based on the quantities executed and measured.

1.7.3.2 95% item rate shall be released after completion of works certification by Engineer in charge.

1.7.3.3 5% of the item rate shall be released after submission of the quality check formats as per the quality plan for the quantum of work billed and duly certified by engineer.

1.7.3.4 All admissible deductions shall be made from the above 95% value.

1.7.3.5 For Retention amount: Please refer clause no. 2.22 of GCC.

1.7.3.6 BHEL Site Engineer, at discretion, may operate the part rate of the items in line with GCC clause no. 2.23.1 (v). Payment for supply portion (subjected to approval of Engineer In-Charge) shall be made only after receipt of material at site.

1.7.4 ROYALTY/ SEIGNIORAGE CHARGES

Royalty/seigniorage charges (if any) for excavation inside plant premises as applicable as per Govt of Telangana shall be reimbursable to the bidder by BHEL for the quantum of earth work done on submission of necessary proof of payments as required by M/s TSGENCO for reimbursement.

1.7.5 METHOD OF MEASUREMENT

Mode of measurement shall be as per relevant clauses of technical specification of this tender. In case the same is not available the relevant IS 1200 in conjunction of IS code 3385 shall be adopted. In case the same is also not available, the standard procedure adopted in CPWD shall be adopted. In case the same is also not available in CPWD, the measurement of the work done will

be based on the mutual agreement between BHEL and contractor. In all the above cases, the interpretation of BHEL will be final and binding to the contractor.

1.7.6 NO CLAIM WHAT SO EVER MAY BE, WILL BE ENTERTAINED UNDER THIS CONTRACT, AFTER DULY SIGNING THE FINAL BILL ALONG WITH MEASURMENT BOOKS AND ACCEPTED BY BHEL.

VOLUME-IA PART-I CHAPTER - VIII
TAXES AND OTHER DUTIES

1.8.1 Goods and Service Tax (GST) & Cess

1.8.1.1 The successful bidder shall furnish proof of GST registration with GSTN Portal in the State in which the Project is being executed, covering the services under this contract. Registration should also bear endorsement for the premises from where the billing shall be done by the successful bidder on BHEL for this project/ work.

1.8.1.2 Contractor's price/rates shall be exclusive of GST & Cess (if applicable) (herein after termed as GST). Contractor shall submit to BHEL the GST compliant tax invoice/debit note/revised tax invoice on the basis of which BHEL will claim the input tax credit in its return. Since this is a works contract, the applicable rate shall be @ 18% GST, as applicable presently.

1.8.1.3 Bidder shall note that the GST Tax Invoice complying with GST Invoice Rules wherein the 'Bill To' details will as below:

BHEL GSTN - 36AAACB4146P1ZG
NAME - BHARAT HEAVY ELECTRICALS LIMITED
ADDRESS - Yadadri Thermal Power Station, 5x 800 MW (Coal based), Veerlapalem village, Dameracherla Mandal, Nalgonda District, Telangana State

1.8.1.4 GST charged in the tax invoice/debit note/revised tax invoice by the contractor shall be released separately to the contractor only after contractor files the outward supply details in GSTR-1 on GSTN portal and input tax credit of such invoice is matched with corresponding details of outward supply of the contractor and has paid the GST at the time of filing the monthly return.

1.8.1.5 In case BHEL has to incur any liability (like interest / penalty etc.) due to denial/reversal / delay of input tax credit in respect of the invoice submitted by the contractor, for the reasons attributable to the contractor, the same shall be recovered from the contractor.

1.8.1.6 Further, in case BHEL is deprived of the Input tax credit due to any reason attributable to contractor, the same shall not be paid or Recovered if already paid to the contractor.

1.8.1.7 Tax invoice/debit Note/revised tax invoice shall contain all such particulars as prescribed in GST law and comply to the timelines for issue of the same. Invoices shall be submitted on time to the concerned BHEL Engineer In Charge.

1.8.1.8 TDS under GST (if/ as & when applicable) shall be deducted at prevailing rates on gross invoice value from the running bills.

1.8.1.9 E-way bills / Transit passes / Road Permits, if required for materials / T&P etc., bought into the project site is to be arranged by the Contractor only.

1.8.1.10 BHEL shall not reimburse any amounts towards any interest / penalty etc., incurred by contractor. Any additional claim at a later date due to issues such as wrong rates / wrong classification by contractor shall not be paid by BHEL.

1.8.2 **All taxes and duty other than GST & Cess**

The contractor shall pay all (except the specific exclusion viz GST & Cess) taxes, fees, license charges, deposits, duties, tools, royalty, commissions, Stamp Duties, or other charges / levies, which may be levied on the input goods & services consumed and output goods & services delivered in course of his operations in executing the contract and the same shall not be reimbursed by BHEL. In case BHEL is forced to pay any of such taxes, BHEL shall have the right to recover the same from his bills or otherwise as deemed fit.

1.8.3 **Statutory Variations**

Statutory variations are applicable under the GST Acts, against production of proof. The changes implemented by the Central / State Government during the tenure of the contract viz. increase / decrease in the rate of taxes, applicability, etc. and its impact on upward revision / downward revision are to be suitably paid/ adjusted from the date of respective variation. The bidder shall give the benefit of downward revision in favour of BHEL. No other variations shall be allowed during the tenure of the contract.

1.8.4 **New Taxes/Levies**

In case Government imposes any new levy / tax after submission of bid during the tenure of the contract, BHEL shall reimburse the same at actual on submission of documentary proof of payment subject to the satisfaction of BHEL that such new levy / tax is applicable to this contract.

1.8.5 **Direct Tax**

BHEL shall not be liable towards Income Tax of whatever nature including variations thereof arising out of this contract as well as tax liability of the bidder and their personnel. Deduction of tax at source at the prevailing rates shall be effected by BHEL before release of payment as a statutory obligation, unless exemption certificate is produced by the bidder. TDS certificate will be issued by BHEL as per the provisions of Income Tax Act.

VOLUME-IA PART-I CHAPTER -IX
BILL OF QUANTITY

As mentioned in the Volume II, Price Bid, Part-C

VOLUME-IA PART-I CHAPTER -X
GENERAL

1.10.1 Contractors are requested to furnish the following at PSSR-HQ, Chennai immediately after release of Letter of Intent (LOI)

I. Security Deposit and Additional Security Deposit (As applicable).
II. Unqualified Acceptance for Detailed LOI/ Work Order.
III. Rs.100/- Stamp Paper for preparation of Contract Agreement.
IV. Option (whether a or b of said clause) exercised towards Performance Security Deposit for the subject contract as per Sl. No. 16 of Volume IA Part II Chapter 1 of TCC.

1.10.2 Contractors are requested to furnish the proof of documents for the following at PSSR- Site.

I. Provident Fund Registration Number.
II. Labour License Number.
III. Workmen Insurance Policy Number.

1.10.3 **In addition to the clause 2.8 of General Conditions of Contract (Volume 1C of Book-II) the contractor shall comply with the following.**

1.10.3.1 **BOCW Act & BOCW Welfare Cess Act**

1.10.3.1.1 The Contractor Should Register their Establishment under BOCW Act 1996 read with rules 1998 by submitting Form I (Application for Registration of Establishment) and Form IV (Notice of Commencement /Completion of Building Other Construction Work) to the respective Labour Authorities i.e.,

a) Assistant Labour Commissioner (Central) in respect of the project premises which is under the purview of Central Govt.–NTPC, NTPL etc.

b) Appropriate State authorities in respect of the project premises which is under the purview of State Govt.

1.10.3.1.2 The Contractor should comply with the provisions of BOCW Welfare Cess Act 1996 in respect of the work awarded to them by BHEL.

1.10.3.1.3 The contractor should ensure compliance regarding Registration of Building Workers as Beneficiaries, Hours of work, welfare measures and other conditions of service with particular reference to Safety and Health measures like Safety Officers, safety committee, issue of Personal protective equipments, canteen, rest room, drinking water, Toilets, ambulance, first aid centre etc.,

1.10.3.1.4 The contractor irrespective of their nature of work and manpower (Civil,

Mechanical, Electrical works etc) should register their establishment under BOCW Act 1996 and comply with BOCW Welfare Cess Act 1996.

1.10.3.1.5 Contractor shall make remittance of the BOCW cess as per Act in consultation with BHEL as per the rates in force (presently 1%). BHEL shall reimburse the same upon production of documentary evidence. However, BHEL shall not reimburse the Fee paid towards the registration of establishment, fess paid towards registration of beneficiaries and contribution of beneficiaries remitted.

1.10.3.1.6 Non-compliance to provisions of the BOCW act and BOCW welfare Cess act is not acceptable. In case of any non-compliance, BHEL reserves the right to withhold any sum it deems fit. Only upon total compliance to the BOCW act and also discharge of total payment of Cess under the BOCW Cess act by the contractor, BHEL shall consider refund of the amounts.

1.10.3.2 **PROVIDENT FUND**

1.10.3.2.1 The contractor is required to extend the benefit of Provident Fund to the labour employed by the contractor in connection with this contract as per the Employees Provident Fund and Miscellaneous Provisions Act 1952. For due implementation of the same, the contractor is hereby required to get themselves registered with the Provident Fund authorities for the purpose of reconciliation of PF dues and furnish to us the code number allotted to them by the Provident Fund authorities within one month from the date of issue of this letter of intent. Please note that in the event of contractor's failure to comply with the provisions of said Act, if recoveries therefore are enforced from payments due to BHEL by the customer or paid to statutory authorities by BHEL, such amount will be recovered from payments due to the contractor.

1.10.3.2.2 The final bill amount would be released only on production of clearance certificate from PF / ESI and labour authorities as applicable.

1.10.3.3 **OTHER STATUTORY REQUIREMENTS**

1.10.3.3.1 The Contractor shall submit a copy of Labour License obtained from the Licensing Officer (Form VI) u/r25 read with u/s 12 of Contract Labour (R&A) Act 1970 & rules and Valid WC Insurance copy or ESI Code (if applicable) and PF code no along with the first running bill.

1.10.3.3.2 The contactor shall submit monthly running bills along with the copies of monthly wages (of the preceding month) u/r78(1)(a)(1) of Contract Labour Rules, copies of monthly return of PF contribution with remittance Challans under Employees Provident Fund Act 1952 and copy of renewed WC Insurance policy or copies of monthly return of ESI contribution with Challans under ESI Act 1948 (if applicable) in respect of the workmen engaged by them.

1.10.3.3.3 The Contractor should ensure compliance of Sec 21 of Contract Labour (R&A) Act 1970 regarding responsibility for payment of Wages. In case of "Non-

compliance of Sec 21 or non-payment of wages" to the workmen before the expiry of wage period by the contactor, BHEL will reserve its right to pay the workmen under the orders of Appropriate authority at the risk and cost of the Contractor.

1.10.3.3.4 The Contractor shall submit copies of Final Settlement statement of disbursal of retrenchment benefits on retrenchment of each workman under I D Act 1948, copies of Form 6-A (Annual Return of PF Contribution) along with Copies of PF Contribution Card of each member under PF Act and copies of monthly return on ESI Contribution – Form 6 under ESI Act1948 (If applicable) to BHEL along with the Final Bill.

1.10.3.3.5 In case of any dispute pending before the appropriate authority under I D act 1948, WC Act 1923 or ESI Act 1948 and PF Act 1952, BHEL reserve the right to hold such amounts from the final bills of the Contractor which will be released on submission of proof of settlement of issues from the appropriate authority under the act.

1.10.3.3.6 In case of any dispute prolonged/pending before the authority for the reasons not attributable to the contractor, BHEL reserves the right to release the final bill of the contractor on submission of Indemnity bond by the contractor indemnifying BHEL against any claims that may arise at a later date without prejudice to the rights of BHEL.

1.10.3.4 **DEPLOYMENT OF SKILLED / SEMI-SKILLED TRADESMEN**

The following clause is applicable in case the contract value / contract price is Rs. Five crores and above.

The contractor shall, at all stages of work deploy skilled / semi-skilled tradesmen who are qualified and possess certificate in particular trade from CPWD Training Institute / Industrial Training. Institute / National Institute of Construction Management and Research (NICMAR), National Academy of Construction, CIDC or any similar reputed and recognized Institute managed / certified by State / Central Government. The number of such qualified tradesmen shall not be less than 20% of total skilled / semi-skilled workers required in each trade at any stage of work. The contractor shall submit number of man days required in respect of each trade, its scheduling and the list of qualified tradesmen along with requisite certificate from recognized Institute to Engineer-in-Charge for approval. Notwithstanding such approval, if the tradesmen are found to have inadequate skill to execute the work of respective trade, the contractor shall substitute such tradesmen within two days of written notice from Engineer-in-Charge. Failure on the part of contractor to obtain approval of Engineer-in-Charge or failure to deploy qualified tradesmen will attract a compensation to be paid by contractor at the rate of Rs. 100 per such tradesman per day. Decision of Engineer-in-Charge as to whether particular tradesman

possesses requisite skill and amount of compensation in case of default shall be final and binding.

1.10.3.5 **RECOVERY OF COMPENSATION PAID TO VICTIM(S) BY BHEL IN CASES OF DEATH/ PERMANENT INCAPACITATION OF PERSON DUE TO AN ACCIDENT DURING THE WORKS**

BHEL shall recover the amount of compensation paid to victim(s) by BHEL towards loss of life / permanent disability due to an accident which is attributable to the negligence of contractor, agency or firm or any of its employees as detailed below.

a) Victim: Any person who suffers permanent disablement or dies in an accident as defined below.

b) Accident: Any death or permanent disability resulting solely and directly from any unintended and unforeseen injurious occurrence caused during the manufacturing / operation and works incidental thereto at BHEL factories/ offices and precincts thereof, project execution, erection and commissioning, services, repairs and maintenance, trouble shooting, serving, overhaul, renovation and retrofitting, trial operation, performance guarantee testing undertaken by the company or during any works /during working at BHEL Units/ Offices/ townships and premises/ Project Sites.

c) Compensation in respect of each of the victims:

(i) In the event of death or permanent disability resulting from Loss of both limbs: Rs. 10,00,000/- (Rs. Ten Lakh)

(ii) In the event of other permanent disability: Rs. 7,00,000/- (Rs. Seven Lakh)

d) Permanent Disablement: A disablement that is classified as a permanent total disablement under the proviso to Section 2 (I) of the Employee's Compensation Act, 1923.

1.10.4 **GENERAL**

1.10.4.1 Site Visit by the Bidder

The bidder shall, prior to submitting his tender for the work, visit, examine and acquire full knowledge & information and necessary conditions prevailing at the site and its surroundings of the plant premises together with all statutory, obligatory, mandatory requirements of various authorities about the site of works at his own expense, and obtain and ascertain for himself on his own responsibility that may be for preparing his tender and entering into a contract, and take the same into account in the quoted contract price for the work.

1.10.4.2 The bidder shall satisfy themselves about the following factors:

i. Site conditions including access to the site, existing and required roads and other means of transport/communication for use by him in connection with the work including diverting and re-routing of services.

ii. Requirement and availability of land and other facilities of his enabling works, establishment of his nursery, office, stores etc.

iii. Ground conditions including those bearing upon transportation, disposal, handling and storage of materials required for the work or obtained there-from.

iv. Source and extent of availability of suitable materials, including water etc., and labour (skilled and unskilled) required for work, and laws and regulations governing their use and employment.

v. Geological, meteorological, topographical and other general features of the site and its surroundings as are pertaining to and needed for the performance of the work.

vi. The limit and extent of surface and subsurface water to be encountered during the performance of the work, and the requirement of drainage and pumping.

vii. The type of equipment and facilities needed, for and in the performance of the work;

viii. The extent of lead and lift required for the work in complete form over the entire duration of the contract, and

ix. All other information pertaining to and needed for the work including information as to the risks, contingencies and other circumstances which may influence or affect the work or the cost thereof under this contract.

1.10.4.3 The bidder should note that information, if any, in regard to the local conditions, as contained in these tender documents, has been given to tenderer merely for guidance and is not warranted to be complete.

1.10.4.4 A bidder shall be deemed to have full knowledge of the site, whether he inspects it or not, and no extra charges consequent on any misunderstanding or otherwise shall be allowed.

1.10.4.5 The bidder and any of his personnel or agents will be granted permission by the Site-In-Charge or his authorized nominee, on receipt of formal application in respect thereof a week in advance of the proposed date of inspection of site, to enter upon his premises and lands for purpose of such inspection, but only on the express condition that the tenderer (and his personnel and agents) will relieve and indemnify the Employer (and his personnel and agents) from and against all liability in respect thereof and will be responsible for personal injury (whether fatal or otherwise), loss of or damage to property and any other loss, damage, costs and expenses however caused which, but for the exercise of

such permission, would not have arisen.

1.10.4.6 Scope of work covered under this specification requires quality workmanship, engineering and green belt management along with the supply of all consumables, tools and tackles and testing instruments. The contractor shall ensure timely completion of work. The contractor shall have adequate tools, measuring instruments etc. in his possession. He shall also have adequate trained, qualified and experienced engineers, supervisory staff and skilled personnel. The manpower deployment identified by contractor shall match with above scope of works.

1.10.4.7 It is not the intent to specify herein all details of all material. Any item related this work not covered by this but necessary to complete the system will be deemed to have been included in the scope of the work.

1.10.4.8 All the necessary certificates and licenses required to carry out this scope of work are to be arranged by the contractor then and there at no extra cost.

1.10.4.9 Site testing wherever required shall be carried out for all items / materials installed by the contractor to ensure proper installation and functioning in accordance with drawings, specifications and manufacturer's recommendations.

1.10.4.10 The contractor shall carry out additional tests, if any, which the Engineer feels necessary because of site conditions and also to meet system specification.

1.10.4.11 The work shall be executed under the usual conditions without affecting power plant construction / operation and in conjunction with other operations and contracting agencies at site. The contractor and his personnel shall co- operate with the personnel of other agencies, co-ordinate his work with others and proceed in a manner that shall not delay or hinder the progress of work as a whole.

1.10.4.12 All the work shall be carried out as per instructions of BHEL engineer. BHEL engineer's decision regarding the correctness of the work and method of working shall be final and binding on the contractor.

1.10.4.13 Wherever Construction sequences are furnished by BHEL, the contractor shall follow the same sequence. Contractor shall execute the supply and works as per sequence prescribed by BHEL at site engineer. No claims for extra payment from the contractor will be entertained on the grounds of deviation from the methods of execution of similar job in any other site or for any reasons whatsoever.

1.10.4.14 If required by BHEL, the contractor shall change the sequence of his operation so that work on priority sectors can be completed within the projects schedule.

The contractor shall afford maximum assistance to BHEL in this connection without causing delay to agreed completion date.

1.10.4.15 Contractor shall, transport all materials to site and unload at site / working area for inspection and checking. All material handling equipment required shall be arranged by the contractor.

1.10.4.16 Contractor shall retain all T&P / Testing instrument / Material handling equipment's etc. at site as per advice of BHEL engineer and same shall be taken out from site only after getting the clearances from engineer in charge.

1.10.4.17 The contractor at his cost shall arrange necessary security measures for adequate protection of his machinery, equipment, tools, materials etc. BHEL shall not be responsible for any loss or damage to the contractor's construction equipment and materials. The contractor may consult the Engineer-in-Charge on the arrangements made for general site security for protection of his machinery equipment tools etc.

1.10.4.18 The Contractor may have to execute work in such a place and condition where other agencies also will be under such circumstances. However, completion time for construction, agreed will be subject to the condition that contractor's work is not hampered by the agencies.

1.10.4.19 Contractor has to work in close co-ordination with other agency at site. BHEL engineer will co-ordinate area clearance. In a project of such magnitude, it is possible that the area clearance may be less / more at a particular given time. Activities and Construction program have to be planned in such a way that the milestones are achieved as per schedule/ plans. Contractor shall arrange & augment the resources accordingly.

1.10.4.20 The contractor must obtain the signature and permission of the security personnel of the customer / BHEL for bringing any of their materials inside the site premises. Without the Entry Gate Pass these materials will not be allowed to be taken outside. Surplus materials including steel item brought at site by the contractors with proper documentation and Gate pass, shall be allowed to taken out of the project premises after completion of relevant works, on certification by BHEL in charge.

1.10.4.21 Contractor shall remove all scrap materials periodically generated from his working area and collect the same at one place earmarked for the same. Load of scraps is to be shifted to a place earmarked by BHEL. Failure to collect the scrap is likely to lead to accidents and as such BHEL reserves the right to collect and remove the scrap at contractor's risk and cost if there is any failure on the part of contractor in this respect.

1.10.4.22 The contractor shall ensure that his premises are always kept clean and tidy to

the extent possible. Any untidiness noted on the part of the contractor shall be brought to the attention of the contractor's site representative who shall take immediate action to clean the surroundings to the satisfaction of the Engineer-in-Charge.

1.10.4.23 The contractor is strictly prohibited from using BHEL's regular components like angles, channels, beams, plates, pipe / tubes, and handrails etc. for any temporary supporting or scaffolding works. Contractor shall arrange himself all such materials. In case of such misuse of BHEL materials, a sum as determined by BHEL engineer will be recovered from the contractor's bill. The decision of BHEL engineer is final and binding on the contractor.

1.10.4.24 No member of the already erected structure / buildings, other component and auxiliaries should be removed / modified without specific approval of BHEL engineer.

1.10.4.25 Contractors shall ensure that all their Staff / Employees are exposed to periodical training programme conducted by qualified agencies/ personnel on latest ISO 9001 Standards.

1.10.4.26 Sometimes, it may be required to re-schedule the activities to enable other agencies to commence/ continue the work so as to keep the overall project schedule.

1.10.4.27 The terminal points decided by BHEL are final and binding on the contractor for deciding the scope of work and effecting the payment for the work done up to the terminals.

1.10.4.28 Crane operators deployed by the contractor shall be tested by BHEL before he is allowed to operate the cranes.

1.10.4.29 On Completion of work, all the temporary buildings, structures, pipe lines, cable etc. shall be dismantled and leveled and debris shall be removed as per instruction of BHEL by the contractor at his cost. In the event of his failure to do so, the expenditure towards clearance of the same will be recovered from the contractor. The decision of BHEL Engineer in this regard is final.

1.10.4.30 It is the responsibility of the contractor to do the checking, testing etc. if necessary, repeatedly to satisfy BHEL Engineer with all the necessary tools and tackles, manpower etc. without any extra cost. The testing will be completed only when jointly certified so, by the BHEL Engineer.

1.10.4.31 If any item not covered but requires being executed, same shall be carried out by the contractor. Equivalent or proportional unit rate shall be considered wherever possible from the BOQ. The rates quoted by the contractor shall be uniform as far as possible for similar items appearing in rate schedule.

1.10.4.32 The contractor's work shall not hinder other work, either underground or over ground, such as electrical, phone lines, water or sewage lines, etc. In areas of overlap, the contractor shall work in coordination with other related contractors. Any damage by the landscape contractor's team to such utilities will be penalized and contractor shall be responsible for cost for such damages.

1.10.4.33 The contractor will be responsible for the safe custody and proper accounting of all materials in connection with the work. If the contractor has drawn materials in excess of design requirements, recoveries will be effected for such excess drawls at the rate prescribed by manufacturing units.

1.10.4.34 Contractor has to clear the front, expeditiously and promptly as instructed by BHEL Engineer for other agencies, like Boiler, piping, Turbine, Generator erection, Cabling, instrumentation, insulation etc., to commence their work from / on the equipments coming under this scope.

1.10.4.35 For the purpose of planning, contractor shall furnish the estimated requirement of power (month wise) for execution of work in terms of maximum KW demand.

1.10.4.36 **DOCUMENTATION**

1.10.4.36.1 RECORDS TO BE MAINTAINED AT SITE:

1.10.4.36.1.1 Record of Quantity of FREE / Chargeable items issued by BHEL must be maintained during contract execution. Also reconciliation statement to be prepared at regular intervals.

1.10.4.36.1.2 The under mentioned Records/ Log-books/ Registers applicable to be maintained.

a. Hindrance Register.
b. Site Order Book.
c. Test Check of measurements.
d. Supply and Consumption Daily Register for Cement and Steel
e. Records of Test reports of Field tests.
f. Records of manufacturer's test certificates.
g. Records of disposal of scraps generated during and after the work completion.
h. List of T&Ps & MMEs.

1.10.4.36.1.3 Other documents / records as specified in chapter XI -Progress of work in PART- I of Technical conditions of Contract Volume IA (Volume I Book I).

1.10.4.36.1.4 L3 schedule as specified in Chapter VI –TIME SCHEDULE in PART- I of Technical conditions of Contract Volume IA (Volume I Book I).

1.10.4.37 **SITE INSPECTION**

1.10.4.37.1 The Owner or his authorized agents may inspect various stages of work during the currency of the contract awarded to him. The contractor shall make necessary arrangements for such inspection and carry out the rectification pointed out by the Owner or his authorized agents without any extra cost to the Owner or his authorized agents. No cost whatsoever such duplication of inspection of work be entertained.

1.10.4.37.2 BHEL / Owner will have full power and authority to inspect the works at any time, either on the site or at the contractor's premises. The contractor shall arrange every facility and assistance to carry out such inspection. On no account will the contractor be allowed to proceed with work of any type unless such work has been inspected and entries are made in the site inspection register by Owner / BHEL.

1.10.4.37.3 The contractor shall maintain at site a joint protocol for recording actual measurement of work carried out at site, inspection and witnessing of various tests conducted by the contractor.

1.10.4.38 Field Quality Assurance (FQA) Formats:-

1.10.4.38.1 It is the responsibility of the contractor to collect and fill up the relevant FQA log sheets of BHEL and present the same to BHEL after carrying out the necessary checks as per the log sheets and obtaining the signature of BHEL and Owner as token of their acceptance. Payment to the contractor will be inked with the submission of these FQA log sheets.

1.10.4.38.2 Site testing wherever required shall be carried out for all items / materials installed by the contractor to ensure proper installation and functioning in accordance with drawings, specifications and manufacturer's recommendations.

1.10.4.38.3 Contractor shall, transport all materials to site and unload at site / working area for inspection and checking. All material handling equipment required shall be arranged by the contractor.

VOLUME – IA PART-I CHAPTER – XI
PROGRESS OF WORK

1.11.1 Refer forms F -14 to F-18 of volume I D of volume -I book-II. Plan and review will be done as per the formats.

1.11.2 Contractor is required to draw mutually agreed monthly construction programs in consultation with BHEL Site In-Charge well in advance of commencement of work at site. Contractor shall ensure completion of work as per agreed program and shall also timely arrange additional resources considered necessary at no extra cost to BHEL.

1.11.3 Progress review meetings will be held at site during which actual progress during the week vis-a-vis scheduled program shall be discussed for actions to be taken for achieving targets. Contractor shall also present the program for subsequent week. The contractor shall constantly update / revise his work program to meet the overall requirement. All quality problems shall also be discussed during above review meetings. Necessary preventive and corrective action shall be discussed and decided upon in such review meetings and shall be implemented by the contractor in time bound manner so as to eliminate the cause of nonconformities.

1.11.4 The contractor shall submit daily, weekly and monthly progress reports, manpower reports, materials reports, consumables report, T&Ps availability report and other reports as per Performa considered necessary by the Site Engineer as per the BHEL formats.

1.11.5 The contractor shall submit weekly / fortnightly / monthly statement report regarding consumption of all consumables for cost analysis purposes.

1.11.6 The monthly report ending on 24th of every month shall be submitted as a booklet and shall contain the following details: -

a) Colour Progress photographs to accompany the report should be submitted.

b) Construction progress in terms of quantity, CUM, etc., completed as relevant to the respective work areas against planned.

c) Site Organization chart of engineers & supervisors as on 24th of the month with further mobilization plan

d) Category- wise man hours engaged during the previous month under the categories. Data will be spilt up under the work area.

e) Consumables report during the previous month.

f) Availability report of T&Ps

g) Safety implementation report in the format

h) Any inputs required from BHEL for activities planned during the subsequent month.

1.11.7 The manpower reports shall clearly indicate the manpower deployed, category wise specifying also the activities in which they are engaged.

1.11.8 During the course of construction, if the progress is found unsatisfactory, or if the target dates fixed from time to time for every milestone are to be advanced, or in the opinion of BHEL, if it is found that the skilled workmen like fitters, operators, technicians etc employed are not sufficient BHEL will induct required additional workmen to improve the progress and recover all charges incurred on this account including all expenses together with BHEL overheads from contractor's bills.

1.11.9 It is the responsibility of the contractor to provide all relevant information on a regular basis regarding construction progress, labour availability, equipment deployment, testing, etc.

1.11.10 The progress reports shall indicate the progress achieved against plan, indicating reasons for delays, if any. The report shall also give remedial actions, which the contractor intends to make good the slippage or lost time so that further works can proceed as per the original plan & the slippages do not accumulate and affect the overall programme.

1.11.11 The contractor to reflect actual progress achieved during the month and will be submitted to BHEL, so that slippages can be observed and necessary action taken in order to ensure that the situation does not get out of control will update the construction schedule forming part of this contract each month.

VOLUME - IA PART – I CHAPTER – XII
MATERIAL HANDLING

1.12.1 Open land as available shall be provided by BHEL on free of cost basis. Contractor shall maintain one centralized fenced store cum bar bending yard at his own cost. Hard surfacing of this yard and all round drain shall be carried out by the contractor at his own cost within the quoted rate. Batching plant area, shall be provided nearer plant premises and contractor shall make use of the area for installation and operation of the Batching Plant at his own cost. The bidder shall make complete arrangement of necessary security personnel, to safeguard all such materials in his custody at his own cost. Materials issued will be used only for construction of permanent work. The contractor shall take care of material issued by BHEL and shall protect the same from theft, damage and weathering at his own cost.

1.12.2 The system for receipt, storage & issue of materials shall be available with vendors for easy traceability.

1.12.3 Periodic audit of system of purchasing, storing and issue, etc. will have to be carried out by the vendors. BHEL will also audit the same.

1.12.4 The contractor shall construct waterproof cement store (capacity 400MT) for initial period for storing and stacking of cement at his own cost, CGI/ asbestos roofing (slope) with brick masonry wall, PCC flooring. Materials required for the same shall be provided by contractor at his own cost. Cement has to be kept over wooden raised platform. Stacking of cement is to be done as per IS codes with proper illumination and locking arrangements.

1.12.5 The contractor shall in no case be entitled for any compensation or damages on account of any delay in supply or non-supply thereof for all or any such material.

1.12.6 Clotting of cement and excessive rusting of steel must be avoided. In case, due to any cause attributable to the contractor, rusting of steel for BHEL issued steel occur rendering the same unusable, then such quantity of cement steel shall be recovered from the interim payment at the penal rate specified in the tender.

1.12.7 The The contractor shall maintain proper store account for all the BHEL issued materials and shall give three copies of computerized reconciliation statement of such account to the BHEL with each running bill.

1.12.8 Materials shall not under any circumstances be taken out of the project site unless otherwise permitted by BHEL.

VOLUME-IA PART –I CHAPTER –XIII

ACCOUNTING OF MATERIALS ISSUE

1.13 ACCOUNTING OF MATERIALS ISSUE

The materials issued to the contractor by BHEL will be accounted as follows:

1.13.1 CEMENT

1.13.1.1 ISSUE OF CEMENT

1.13.1.1.1 Cement as received from the manufacturer / stockiest will be issued **free of cost** to the contractor. The cement shall be provided normally in bulkers and shall be unloaded in the silos (2 nos. cement silo of capacity 100 MT per 30 CUM/hr batching plant) to be installed by the bidder nearer to their batching plants. This is only minimum requirement of silos and the number of cement silos shall be increased based on the site requirement. Unloading arrangements shall be provided by the bidder at his own cost including provision of necessary manpower support.

1.13.1.1.2 On advance request of the bidder, the cement shall be supplied in 50kg tamper proof sealed Bags for other than RCC works like masonry, flooring works etc. The theoretical weight of each bag of cement for issued purposes will be considered as 50 kg, the contractor shall be accountable for the cement issued to him on this notional weight only. No claim whatsoever will be entertained because of difference between theoretical and actual weight of the bags of cement. The empty cement bags duly accounted for against issue shall be the property of the contractor and the same shall be disposed by the contractor as per statutory regulation prevailing in the project.

1.13.1.1.3 The contractor shall submit to the engineer, a statement indicating estimated quantity of cement required during a quarter, at least two months in advance of the quarter. In addition, the contractor shall also furnish the estimated requirement of cement during a month by the third week of the previous month indicating his requirement.

1.13.1.1.4 Bidder is responsible for unloading the cement as soon as the arrival of cement, either in silo, if received in bulker or in the weather proof cement storage sheds, if received bags. Bagged cement shall be stored in weatherproof sheds having dense impervious bituminous or concrete floors which shall be kept swept clean at all times. The storage arrangements (to be made by the contractor at his own cost) shall be fully completed and approved by the owner (BHEL/TSGENCO) before any cement is delivered to site. The construction of cement storage sheds as per the requirement of BHEL, unloading of cement bags, stacking properly in the storage sheds, removal of the sheds after the completion of the work is in the scope of bidder within the quoted price.

1.13.1.1.5 Bidder is responsible for sampling and testing of cement as per Indian Standard / Specification / approved quality plan in the testing laboratory established by the bidder.

1.13.1.1.6 Bidder is responsible for carrying out design mix as per IS 456/10262 Latest revision and specification, using the cement provided by BHEL and submit the design mix proportions for the approval of BHEL / TSGENCO. The design / trial mix shall be carried out time to time on change of brand / type of cement supplied by BHEL and suitable adjustments on the quantity of ingredients (sand, aggregates, admixture) of the concrete to get the required workability and durability, shall be the responsibility of the bidder without any extra cost to BHEL.

1.13.1.1.7 Following shall be limit for the maximum quantity of BHEL issue materials that would be with the contractor at any point of time when work is in progress (excluding what has already been incorporated in the works).

Sl. No.	ISSUE OF MATERIALS	MAX. QUANTITY IN CONTRACTOR'S STORE
1.	Cement	Requirement of one month

1.13.1.2 RETURN OF CEMENT

Sealed cement bags remaining unused and in perfectly good condition at the time of completion or termination of the contract shall be returned promptly, (within 15 days from assessment) if BHEL / Engineer is satisfied of the physical condition of the cement. Return of such cement to the project stores / place as identified within the project area by Engineer / BHEL will not be entitled to handling and incidental charges. Surplus sealed and good conditioned cement bags will be taken back on weighment basis.

1.13.1.3 CEMENT CONSUMPTION AND WASTAGE

The theoretical consumption of cement shall be based on the following.

i. For design mix concrete as per approved design mix.

ii. For nominal mix concrete work, as per minimum cement as specified or as approved by Engineer-in-charge.

For item of works, where volume mix is permitted in writing by BHEL, for masonry works, plaster other miscellaneous items, the cement consumption shall be governed by the "Statement of Cement Consumption" attached to the Delhi schedule of Rates of CPWD-DSR- LATEST REVISION unless otherwise specified in the specifications or the drawing of contract or mutually agreed by Engineer-in-charge and contractor.

Actual consumption= Issue – Surplus / unused quantity of cement returned in good condition by contractor to store. (No sweep

cement will be taken back by BHEL).

1.13.1.4 CEMENT WASTAGE

Allowable wastage: One and half percent (+1.5%) of theoretical consumption of cement.

For any material issued by BHEL to the contractor free of cost, and which is not accounted by the contractor to BHEL, then recovery for such material shall be effected at penal rates.

Sl. No.	Cement consumption	Basis of issue & penal recovery
C-1	Theoretical consumption (without considering any wastage or loss).	Free
C-2	Actual consumption being limited to one and half percent (+1.5%) of aforesaid theoretical consumption towards allowable wastage.	Free
C-3	Actual consumption beyond one and half percent (+1.5%) of above (C-1).	Penal rate

1.13.2 STEEL MATERIAL

1.13.2.1 ISSUE OF STEEL

1.13.2.1.1 The steel shall be issued to the contractor on the following basis:

Sl. No.	Description	Basis
(a)	Structural Steel	Weighment basis (Unit – MT)
(b)	Reinforcement Steel and Earthing rod (MS round)	Weighment basis (Unit – MT)

1.13.2.1.2 All the steel (structural, reinforcement, earthing MS rod) issued by BHEL shall be properly accounted for. The total quantity of steel required for the work will be calculated from the approved Bar Bending schedule, fabrication drawings, approved laps, chairs and lugs. The measurement for payment as well as for accounting shall be based on the sectional weights as indicated in the following IS specifications.

IS: 808 (Latest revision)	Beams, Channels and Angles
IS: 1730 (Latest revision)	Plates, Sheets and Strips / Flats
IS: 1732 (Latest revision)	Rounds including deformed high yield strength bars
IS:1786 (Latest revision)	Reinforcement steel

In case any such sectional weights are not available in the above documents, the manufacturer recommendation shall be binding.

1.13.2.1.3 The steel issued to the contractor shall be mainly in standard length and sections as received from the supplier. However, the contractor shall be bound to accept the steel in length as available in the project stores. No claims for extra payment because of issue of non-standard length will be entertained.

1.13.2.1.4 The contractor shall satisfy himself of the quality and quantity of the materials at the time of taking delivery from BHEL stores. No claims whatsoever will be entertained by BHEL because of quality or quantity after the materials are taken by the contractor from BHEL stores.

1.13.2.1.5 The contractor shall submit to the engineer, a statement indicating estimated quantity of steel required during a quarter, at least two months in advance of the quarter. In addition, the contractor shall also furnish the estimated requirement of steel during a month by the third week of the previous month indicating his requirement.

1.13.2.1.6 Following shall be limit for the maximum quantity of BHEL issue materials that would be with the contractor at any point of time when work is in progress (excluding what has already been incorporated in the works).

SL. No.	ISSUE OF MATERIALS	MAX. QTY IN CONTRACTOR'S STORE.
1	Reinforcement Steel & Earthing rod MS round	Requirement of one month
2	Structural Steel (only for embedment/ inserts)	-Do-

1.13.2.1.7 Bidder to note that steel materials required for foundation bolts, embedded items etc. other than those supplied by BHEL, shall be supplied by the bidder. However, Bidder shall use the scrap materials for their use (if issued by BHEL) in the permanent works as embedment/ inserts etc. after necessary store issue formalities and shall be accounted for monthly reconciliation.

1.13.2.2 RETURN OF MATERIALS

a) All surplus steel and all wastage materials will be taken back on weighment basis.

b) Surplus, unused and untampered steel shall be sorted section-wise and returned separately to a place directed by BHEL / Engineer within the project area. Return of such materials will not be entitled to any handling and incidental charges.

c) All wastage / scrap (including melting scrap, wastage, and unusable scrap) shall be promptly returned to the stores and a receipt obtained for material accounting purposes. Return of such material will not be entitled to any transportation and incidental charge.

1.13.2.2.1 **SCRAP & SERVICEABLE MATERAILS:**

a) All pipes measuring 2 metre and above in length shall be considered as serviceable materials provided the materials are in good and acceptable condition. Pipe in less than 2 metre length shall be treated as scrap.

b) All TMT measuring 3 metre and above in length shall be treated as serviceable materials provided they are in good and acceptable condition. TMT in less than 3 metre length shall be treated as scrap.

c) All Structural steel of length above 2 M except M.S. Plate shall be considered as serviceable materials provided the materials is in good and acceptable condition. Structural steel in length less than 2 M shall be treated as scrap.

d) Plates having both sides greater than 1 Metre OR if any side is less than 1 M but greater than 0.5 M and the total area is equal or greater than 2 Sq. Metre shall be considered as serviceable.

1.13.2.3 STEEL CONSUMPTION AND WASTAGE

1.13.2.3.1 **REINFORCEMENT AND EARTHING ROD MS ROUND STEEL CONSUMPTION AND WASTAGE.**

a) CONSUMPTION.

The theoretical consumption of various sections and/or diameter of reinforcement and earthing rod steel shall be based on approved construction drawing and bar bending schedule. Weight shall be calculated considering the sectional weights as per Indian standards. No extra cost shall be payable to the contractor for any deviation in weights for the different procedures adopted for issue and calculation of the theoretical consumption including rolling tolerances.

- Actual consumption = Issue – Surplus.
- Surplus = Un-tampered & unused quantity of steel and serviceable materials as stipulated under clause "Scrap and Serviceable Materials (Refer Clause 1.13.2.2.1 above)" returned by the contractor to BHEL store along with relevant documents.
- Wastage = Actual consumption – Theoretical consumption.

b) WASTAGE:

ALLOWABLE WASTAGE: (+3%) (Three percent) of the theoretical consumption shall be considered as allowable wastage. Invisible wastage (max limit to 0.5%), if any, shall be considered to be included in the specified 3 % allowable wastage.

Sl. No.	CONSUMPTION OF REINFORCEMENT STEEL & EARTHING ROD, MS ROUND	BASIS OF ISSUE & PENAL RECOVERY
R-1	Theoretical consumption (without considering any wastage and scrap or loss) as per spec. and drg.	Free
R-2	Wastage being limited to plus THREE percent (+3%) of aforesaid theoretical consumption (R-1) towards allowable wastage including invisible wastages (invisible wastages limited to 0.5% of theoretical consumptions).	Free
R-3	Wastage beyond THREE percent (+3%) of the theoretical consumption above (R-1).	Penal Rate

1.13.2.3.2 **STRUCTURAL STEEL, (ROLLED SECTION, PLATES ETC.) CONSUMPTION & WASTAGE:**

A) Structural steel will not be issued for this contract. If any issued for expediting work at site, below mentioned instructions to be followed.

Sl.No.	CONSUMPTION OF STRUCTURAL STEEL (ROLLED SECTION, PLATES)	BASIS OF ISSUE & PENAL RECOVERY
S-1	Theoretical consumption (without considering any wastage, scrap or loss) as per spec. & drawing.	Free
S-2	Wastage limited to plus Four percent (+4%) of the aforesaid theoretical consumption (S-1) towards allowable wastage including invisible wastages (invisible wastages limited to 0.5% of theoretical consumptions)	Free
S-3	Wastage beyond Four percent (4%) of the aforesaid theoretical consumption (S-1).	Penal Rate

1.13.2.3.3 **RECONCILIATION OF MATERIALS**

a) The contractor shall submit a reconciliation statement of steel issued to him with each RA Bill.

b) At the time of submission of bills, the contractor shall properly account for

the material issued to him as specified herein to the satisfaction of BHEL certifying that the balance materials are available with contractor's custody at site.

c) At the time of submission of bills by the contractor, if it is noticed by BHEL that the wastage is high and calls recovery at the penal rate, then, BHEL will proceed for recovery for the excess wastage as per penal recovery rates as specified.

d) The reference drawings for actual material consumption to be used for the purpose of reconciliation shall be drawings prepared by the BHEL and drawings approved by BHEL for fabrication works and such other drawings approved by BHEL. This shall also include the bar bending schedule prepared by the contractor and approved by BHEL.

1.13.3 RECOVERY OF MATERIAL

Recovery for wastages shall be made from the bills of contractor at the penal rate mentioned in the table below for the following cases:

a) If the wastage exceeds the specified limit

b) If the wastage not exceeded specific limit, but not returned to BHEL store except invisible wastages

c) For not returning the surplus serviceable materials.

1.13.4 PENAL RATE OF MATERIALS

The penal rate shall be as follows:

Sl. No.	Description	Penal Rate
A.	**REINFORCEMENT STEEL** Cold rolled steel, high strength deformed bar or mild steel round bars including earthing rod MS round	Rs. 42285.60 per MT + GST and/ or other taxes and duties.
B	**CEMENT (OPC/ PPC/ PSC)**	Rs. 3281.25 per MT + GST and/ or other taxes and duties.
C	**STRUCTURAL STEEL**	Rs. 48667.50 per MT + GST and/ or other taxes and duties.

VOLUME-IA PART – II CHAPTER 1

CORRECTIONS / REVISIONS IN SPECIAL CONDITIONS OF CONTRACT, GENERAL CONDITIONS OF CONTRACT AND FORMS & PROCEDURES

Sl No: 1

Clause 4.1.11 under 'Obligations of Contractor' in SCC is deleted.

Sl No: 2:

OCCUPATIONAL HEALTH, SAFETY & ENVIRONMENT MANAGEMENT/ QUALITY ASSURANCE PROGRAMME

The following clauses in Occupational Health, Safety & Environment Management / Quality Assurance Programme published in Chapter-IX of Special Conditions of Contract (Volume I Book-II) is revised as under.

Chapter IX Clause 9.1 is modified as below:

Contractor will comply with HSE (Health, Safety & Environment) requirements of BHEL as per the "HSE Plan for Site Operations by Subcontractor" (Document No. HSEP: 14 Rev01) enclosed.

Chapter IX Clause 9.1.1 to 9.1.25 stands deleted.

Chapter IX Clause 9.2 to 9.62 stands deleted.

Sl No: 3:

Clause No. 10.5 on RA Bill Payments, in Special Conditions of Contract (SCC), Volume-IB, Book-II, is revised as under:

The payment for running bills will normally be released within 30 days of submission of running bill complete in all respects with all documents. It is the responsibility of the contractor to make his own arrangements for making timely payments towards labour wages, statutory payments, outstanding dues etc., and other dues in the meanwhile.

Sl No: 4:

Earnest Money Deposit (EMD) clause 1.9 in General Conditions of Contract (GCC) (Volume I Book-II) is revised as under.

1.9 EARNEST MONEY DEPOSIT

1.9.1 Every tenderer shall submit the prescribed amount of Earnest Money Deposit (EMD) to BHEL PSSR, only in the following forms: -

i. Electronic Fund Transfer credited in BHEL account (before tender opening)

ii. Through Online EMD payment portal of BHEL with SBI (before tender opening) by following steps as below:-

1. Visit www.onlinesbi.com -> Go to State Bank Collect (In the tab section)

2. Click Check box to proceed for payment -> Click on Proceed
3. Under State of Corporate/ Institution ->Select Tamilnadu
4. Under Type of Corporate/ Institution -> Select PSU – Public Sector Undertaking ->Go
5. Under PSU – Public Sector Undertaking Name -> Select BHEL PSSR CHENNAI and Submit
6. Under Select Payment Category ->-> SCT TENDER EMD & TENDER FEES

iii. Banker's cheque or Pay order or Demand Draft in favour of 'Bharat Heavy Electricals Limited' (along with offer) and payable at Chennai.

iv. Fixed Deposit Receipt (FDR) issued by Scheduled Banks/ Public Financial Institutions as defined in the Companies Act (FDR should be in the name of the Contractor, a/c BHEL) along with the offer.

v. In case EMD amount is more than Rs. Two Lakhs, Tenderer has the option to submit Rs. Two lakhs in the forms described above in clause no. 1.9.1. (i) to (iv) and the remaining amount over and above Rs. Two Lakhs in the form of Bank Guarantee from Scheduled Bank (along with the Offer).

Note:

a) Proforma of Bank Guarantee (in lieu of Earnest Money)- Form WAM 23 is enclosed with this Tender.
b) The Bank Guarantee shall be valid for at least six months from the due date of tender submission mentioned in the Notice Inviting Tender.
c) Date of Expiry of Claim shall be as given in Proforma of Bank Guarantee (in lieu of Earnest Money)- Form WAM 23.

Bank Details for the purpose of Taking EMD

Name and Address of Beneficiary:	Bharat Heavy Electricals Ltd. Tek Towers, No. 11, Old Mahabalipuram Road, Okkiyam Thoraipakkam, Chennai - 600097
Name of Bank:	State Bank Of India
Bank Branch Address:	SBI Saidapet Branch, EVR Periyar Building, Nandanam, Anna Salai, Chennai - 600035
IFSC Code :	SBIN0000912
Account No. :	10610819499

Details for SFMS (Structured Financial Messaging System) transmission of BG

Bank and Branch	SBI TFCPC Branch
Branch Code	5056
IFSC Code	SBIN0005056

1.9.2 EMD shall not carry any interest.

1.9.3 EMD by the Tenderer will be forfeited as per NIT Conditions, if:

i. After opening the tender and within the offer validity period, the Tenderer revokes his tender or makes any modification in his tender which is not acceptable to BHEL.

ii. The Contractor fails to deposit the required Security deposit or commence the work within the period as per LOI/Contract.

1.9.4 EMD given by all unsuccessful tenderers will be refunded normally within 15 days of award of work.

1.9.5 EMD of successful tenderer will be retained as part of Security Deposit.

1.9.6 EMD by the tenderer shall be withheld in case any action on the tenderer is envisaged under the provisions of extant" Guidelines on Suspension of Business dealings with suppliers/contactors" and forfeited / released based on the action determined under these guidelines.

<u>Sl No: 5</u>

SECURITY DEPOSIT The SECURITY DEPOSIT (SD) clause 1.10 published in General Conditions of Contract (Volume I Book-II) is revised as under.

1.10 <u>Security Deposit:</u>

1.10.1 Upon acceptance of Tender, the successful Tenderer should deposit the required amount of Security Deposit for satisfactory completion of work, as given below:

1.10.2 The total amount of Security Deposit will be 5% of the contract value. EMD of the successful tenderer shall be converted and adjusted towards the required amount of Security Deposit.

1.10.3 The security Deposit should be furnished before start of the work by the contractor.

1.10.4 Modes of deposit:

1.10.4.1 The balance amount to make up the required Security Deposit of 5% of the contract value may be furnished in any one of the following forms

i. Cash (as permissible under the extant Income Tax Act)

ii. Local cheques of Scheduled Banks (subject to realization)/ Pay Order/ Demand Draft/ Electronic Fund Transfer in favour of BHEL

iii. Bank Guarantee from Scheduled Banks / Public Financial Institutions as defined in the Companies Act. The Bank Guarantee format for Security Deposit shall be in the prescribed formats.

iv. Fixed Deposit Receipt issued by Scheduled Banks/ Public Financial Institutions as defined in the Companies Act. The FDR should be in the name of the contractor, A/C BHEL, duly discharged on the back.

v. Securities available from Indian Post offices such as National Savings Certificates, Kisan Vikas Patras etc. (Certificates should be held in the name of Contractor furnishing the security and duly endorsed/ hypothecated/ pledged, as applicable, in favour of BHEL and discharged on the back)

(Note: BHEL will not be liable or responsible in any manner for the collection of interest or renewal of the documents or in any other matter connected therewith)

1.10.5 At least 50% of the Security Deposit including the EMD should be deposited in any form as prescribed before start of the work and the balance 50% of the Security Deposit will be recovered by deducting 10% of the gross amount progressively from each running bills of the contractor till the total amount of the required Security Deposit is collected.

1.10.6 The recoveries made from running bills (cash deduction towards balance SD amount) will be released against submission of equivalent Bank Guarantee in the prescribed formats, but only once, before completion of work.

1.10.7 The Security Deposit shall not carry any interest.

1.10.8 If the value of work done at any time exceeds the contract value, the amount of Security Deposit shall be correspondingly enhanced and the excess Security Deposit due the enhancement shall be immediately deposited by the Contractor or recovered from payment/s due to the Contractor.

1.10.9 A) The validity of Bank Guarantees towards Security Deposit shall be initially upto the completion period as stipulated in the Letter of Intent/Award + 3 months, and the same shall be kept valid by proper renewal till the acceptance of Final Bills of the Contractor, by BHEL

B) Date of Expiry of Claim shall be as given in the prescribed formats for Bank Guarantee towards Security Deposit

1.10.10 BHEL reserves the right of forfeiture of Security Deposit in addition to other claims and penalties in the event of the Contractor's failure to fulfill any of the contractual obligations or in the event of termination of contract as per terms and conditions of contract. BHEL reserves the right to set off the Security Deposit against any claims of other contracts with BHEL.

1.10.11 <u>Penalty for Delayed Remittance of Security Deposit</u>

If the contractor fails to furnish SD before start of work, in line with 1.10.3 above, Simple Interest against delayed remittance of the Security Deposit shall be deducted from the sub-contractor at the rate of SBI PLR + 2% on the value of 50% SD of the contract, for the delayed period (i.e., period between start of work and date of remittance of Initial SD, i.e., atleast 50% of SD). In case, the delayed period has different SBI PLR rates, Simple Interest shall be calculated based on

different rates by considering the corresponding time period. On similar lines Penalty shall be levied for delayed remittance of Additional Security Deposit (if applicable).

Note: - Bank details & SFMS details provided above in Sl. No. 04 Earnest Money Deposit) may be used for the purpose of arranging Bank Guarantees towards Security Deposit / Additional Security Deposit also.

Sl No: 6

Clause 2.7.1, 2.7.2 and 2.7.3 in GCC regarding Rights of BHEL is revised as under:

2.7.1 To withdraw any portion of work and / or to restrict / alter quantum of work as indicated in the contract during the progress of work and get it done through other agencies to suit BHEL's commitment to its customer or in case BHEL decides to advance the date of completion due to other emergent reasons / BHEL's obligation to its customer.

In case of inadequate manpower deployed by the contractor, BHEL reserves the right to deploy additional manpower through any other agency for expediting activities in the interest of the project. Supplied manpower shall be put on job by the contractor and payments and other statutory compliances related to manpower shall be the contractor's responsibility. In case of contractor's failure to fulfill his obligations in respect of such manpower, BHEL reserves the right to take necessary action as per contract conditions.

2.7.2.

2.7.2.1 To terminate the contract or withdraw portion of work and get it done through other agency, at the risk and cost of the contractor after due notice of a period of 14 days' by BHEL in any of the following cases:

i. Contractor's poor progress of the work vis-à-vis execution timeline as stipulated in the Contract, backlog attributable to contractor including unexecuted portion of work does not appear to be executable within balance available period considering its performance of execution.
ii. Withdrawal from or abandonment of the work by contractor before completion of the work as per contract.
iii. Non-completion of work by the Contractor within scheduled completion period as per Contract or as extended from time to time, for the reasons attributable to the contractor.
iv. Termination of Contract on account of any other reason (s) attributable to Contractor.
v. Assignment, transfer, subletting of Contract without BHEL's written permission.

vi. Non-compliance to any contractual condition or any other default attributable to Contractor.

Risk & Cost Amount against Balance Work:

Risk & Cost amount against balance work shall be calculated as follows:

Risk & Cost Amount= [(A-B) + (A x H/100)]

Where,

A= Value of Balance scope of Work (*) as per rates of new contract

B= Value of Balance scope of Work (*) as per rates of old contract being paid to the contractor at the time of termination of contract i.e. inclusive of PVC & ORC, if any.

H = Overhead Factor to be taken as 5

In case (A-B) is less than 0 (zero), value of (A-B) shall be taken as 0 (zero).

* Balance scope of work (in case of termination of contract):

Difference of Contract Quantities and Executed Quantities as on the date of issue of Letter for 'Termination of Contract', shall be taken as balance scope of Work for calculating risk & cost amount. Contract quantities are the quantities as per original contract. If, Contract has been amended, quantities as per amended Contract shall be considered as Contract Quantities.

Items for which total quantities to be executed have exceeded the Contract Quantities based on drawings issued to contractor from time to time till issue of Termination letter, then for these items total Quantities as per issued drawings would be deemed to be contract quantities.

Substitute/ extra items whose rates have already been approved would form part of contract quantities for this purpose. Substitute/ extra items which have been executed but rates have not been approved, would also form part of contract quantities for this purpose and rates of such items shall be determined in line with contractual provisions.

However, increase in quantities on account of additional scope in new tender shall not be considered for this purpose.

NOTE: Incase portion of work is being withdrawn at risk & cost of contractor instead of termination of contract, contract quantities pertaining to portion of work withdrawn shall be considered as 'Balance scope of work' for calculating Risk & Cost amount.

LD against delay in executed work in case of Termination of Contract:

LD against delay in executed work shall be calculated in line with LD clause no. 2.7.9 of GCC, for the delay attributable to contractor. For limiting the maximum

value of LD, contract value shall be taken as Executed Value of work till termination of contract.

Method for calculation of "LD against delay in executed work in case of termination of contract" is given below.

i). Let the time period from scheduled date of start of work till termination of contract excluding the period of Hold (if any) not attributable to contractor = T1

ii). Let the value of executed work till the time of termination of contract= X

iii). Let the Total Executable Value of work for which inputs/fronts were made available to contractor and were planned for execution till termination of contract = Y

iv). Delay in executed work attributable to contractor i.e. T2=[1-(X/Y)] x T1

v). LD shall be calculated in line with LD clause (clause 2.7.9) of the Contract for the delay attributable to contractor taking "X" as Contract Value and "T2" as period of delay attributable to contractor.

1.7.2.2 In case Contractor fails to deploy the resources as per requirement, BHEL can deploy own/hired/otherwise arranged resources at the risk and cost of the contractor and recover the expenses incurred from the dues payable to contractor. Recoveries shall be actual expenses incurred plus 5% overheads or as defined in TCC.

2.7.3 **Recoveries arising out of Risk & Cost and LD or any other recoveries due from Contractor**

Following sequence shall be applicable for recoveries from contractor:

a) Dues available in the form of Bills payable to contractor, SD, BGs against the same contract.

b) Demand notice for deposit of balance recovery amount shall be sent to contractor, if funds are insufficient to effect complete recovery against dues indicated in (a) above.

c) If contractor fails to deposit the balance amount to be recovered within the period as prescribed in demand notice, following action shall be taken for balance recovery:

i) Dues payable to contractor against other contracts in the same Region shall be considered for recovery.

ii) If recovery cannot be made out of dues payable to the contractor as above, balance amount to be recovered, shall be informed to other Regions/Units for making recovery from the Unpaid Bills/Running Bills/SD/BGs/Final Bills of contractor.

iii) In-case recoveries are not possible with any of the above available options, Legal action shall be initiated for recovery against contractor.

Sl No: 7:

In addition to clause 2.7.9 of General Conditions of Contract (GCC), a New clause 2.7.9.1 is added as below.

2.7.9.1 Penalty for Intermediate Milestones

2.7.9.1.1 M1 and M2 shall be intermediate Milestones for this work.

2.7.9.1.2 In case of slippage of these identified Intermediate Milestones, Delay Analysis shall be carried out on achievement of each of these two Intermediate Milestones in reference to Form 14.

2.7.9.1.3 Incase delay in achieving M1 milestone is solely attributable to the contractor,0.5% per week of executable contract value* limited to Maximum 2% of executable contract value will be withheld.

2.7.9.1.4 Incase delay in achieving M2 milestone is solely attributable to the contractor,0.5% per week of executable contract value* limited to maximum 3% of executable contract value will be withheld.

2.7.9.1.5 Amount already withheld, if any, against slippage of M1 milestone, shall be released only if there is no delay attributable to contractor in achievement of M2 milestone.

2.7.9.1.6 Amount required to be withheld on account of slippage of identified intermediate milestone(s) shall be withheld out of respective milestone payment and balance amount (if any) shall be withheld @10% of RA Bill amount from subsequent RA bills.

2.7.9.1.7 Final deduction towards LD (if applicable), on account of delay attributable to contractor shall be based on final delay analysis on completion / closure of contract. Withheld amount, if any due to slippage of intermediate milestones shall be adjusted against LD or released as the case may be.

2.7.9.1.8 In case of termination of contract due to any reason attributable to contractor before completion of work, the amount already withheld against slippage of intermediate milestones shall not be released and be converted in to recovery.

Note: *Executable contract value-value of work for which inputs/fronts were made available to contractor and were scheduled for execution till the date of achievement of that milestone.

Sl No: 8:

The OVERRUN COMPENSATION (ORC) clause 2.12 published in General Conditions of Contract (Volume I Book II) is revised as under.

2.12 **OVERRUN COMPENSATION (ORC)**

2.12.1 **ORC during original contract period:** No ORC shall be applicable during the original contract period.

2.12.2 **ORC during extended period for the reasons solely attributable to contractor:** No ORC shall be applicable during the extended period granted for the reasons solely attributable to contractor and work executed during this period shall be paid as per original contract rates.

2.12.3 **ORC during extended period for the reasons not attributable to contractor:** ORC shall be payable as per following procedure:

2.12.3.1 For initial period of twelve months of extended period, ORC rate applicable over executed value shall be 5%. For every subsequent period of twelve months, ORC rate shall be further increased by 5% over the previous rate. For example, ORC rates applicable for initial period of 12 months and subsequent period of 12 months are given below.

Sl. No.	Extended Period for the reasons attributable to BHEL	ORC rate applicable over executed value
1	First 12 months	5%
2	13th-24th month and so on	10.25% {[(1.05 x 1.05)-1] x 100}

This process of increasing ORC rate for each subsequent period of 12 months shall continue till applicability of ORC.

2.12.3.2 On completion of original contract period as well as on completion of each subsequent period of twelve months i.e. at the time of change in applicable ORC rate, Delay Analysis shall be carried out and percentage shortfall attributable to both BHEL & Contractor shall be calculated.

2.12.3.3 For the purpose of calculation of ORC, executed value of work in the month shall be divided in Part-1 and Part-2 in proportion of percentage shortfall attributable to BHEL and contractor respectively, based on the last delay analysis as worked out in 2.12.3.2.

ORC shall be payable only on Part-1 and no ORC shall be payable on Part-2.

Value of Part-1 shall be further limited to the value of actual inputs provided by BHEL i.e. “Plan - Shortfall attributable to BHEL” for the month, as per Form-14 for calculation of ORC.

2.12.3.4 Payment of ORC amount shall be further regulated as follows:

(i) 50% of the ORC is allocated for deployment of matching resources (with weightages) agreed as per the joint programme drawn vide 2.11.4. ORC

Payment against resources shall be calculated in proportion to percentage of resources actually deployed w.r.t. planned resources, as per Form-14.

(ii) 50% of ORC is allocated for achieving of planned progress agreed as per the joint programme drawn vide 2.11.4. ORC Payment shall be reduced in proportion to percentage shortfall attributable to contractor w.r.t.–"Plan - Shortfall attributable to BHEL" for the month, as per Form-14.

2.12.3.5 The maximum amount of ORC payable for the month shall be limited to Rs. 5,00,000/-.

2.12.3.6 In case, there is no shortfall attributable to contractor for the month and also contractor has deployed the resources as agreed in Form-14 but ORC amount payable for the month worked out as per procedure mentioned in clause 2.12.3.3, 2.12.3.4 and 2.12.3.5, is less than Rs.1,00,000/-, then ORC amount payable for the month shall be Rs.1,00,000/- otherwise ORC amount payable for the month shall remain same.

2.12.3.7 In case execution is on **HOLD** (Other than Force Majeure), ORC shall be payable as per following:

i). Contractor has not been permitted by BHEL to de-mobilize

a) ORC amount of Rs. 1,00,000/- per month shall be applicable during the period of HOLD provided resources as planned are deployed (not demobilized) during the period of hold.

b) Subsequent to lifting of HOLD, Period of HOLD shall not be excluded in calculation of period for deciding applicable ORC rate as per clause 2.12.3.1.

ii). Contractor has been permitted to demobilize and to remobilize after lifting of HOLD

a) No ORC shall be payable to contractor for the period of HOLD.

b) Subsequent to lifting of HOLD, Period of HOLD shall not be excluded in calculation of period for deciding applicable ORC rate as per clause 2.12.3.1.

2.12.3.8 In case **Force Majeure** is invoked:

i). No ORC shall be applicable during the period of Force Majeure.

ii). Subsequent to revocation of Force Majeure, period of Force Majeure shall be excluded in calculation of period for deciding applicable ORC rate as per clause 2.12.3.1.

2.12.4 Applicability of ORC: ORC shall not be applicable for following activities.

(i) Area cleaning, removal of temporary structures and return of scrap.

(ii) Punch list points / pending points liquidation pending due to reasons attributable to contractor

(iii) Submission of "As built Drawing"
(iv) Material Reconciliation
(v) Completion of Contract Closure formalities like HR Clearance/ No dues from various dept./ Statutory Authorities etc.

2.12.5 Total Over Run Compensation shall be limited to 10% of the cumulatively executed contract value till the month (excluding Taxes and Duties if payable extra). For this purpose, executed contract value excludes PVC, ORC and Extra/Supplementary Works.

Sl No: 9

Clauses 2.13.1, 2.13.6 & 2.13.7 in GCC on Interest Bearing Recoverable Advances,

9.1 Clauses 2.13.1,2.13.6 & 2.13.7 in GCC is revised as under:

9.1.1 Clause 2.13.1 in GCC is revised as "Normally no advance payment shall be payable to the contractor. Mobilization advance payment in exceptional circumstances shall be interest bearing and secured through a Bank Guarantee and shall be limited to a maximum of 5% of contract value. This 'Interest Bearing Recoverable Advance' shall be payable in not less than two installments with any of the installment not exceeding 60% of the total eligible advance".

9.1.2 Clause 2.13.6 in GCC is revised as "The rate of interest applicable for the above advances shall be the Base rate of State Bank of India prevailing at the time of disbursement of the advance + 6%, and such rate will remain fixed till the total advance amount is recovered".

9.1.3 Clause 2.13.7 in GCC is revised as "Unadjusted amount of advances paid shall not exceed 5% of the total contract value at any point of time. Recovery of advances shall be made progressively from each Running Bill such that the advance amounts paid along with the interest is fully recovered by the time the contractor's billing reaches 90% of contract value."

Sl. No: 10: Void

Sl No: 11:

PRICE VARIATION COMPENSATION (PVC)

The PRICE VARIATION COMPENSATION (PVC) clause 2.17 published in General Conditions of Contract (Volume IC Book-II) is revised as under.

2.17 PRICE VARIATION COMPENSATION

2.17.1 In order to take care of variation in cost of execution of work on either side, due to variation in the index of LABOUR, HIGH SPEED DIESEL OIL, WELDING ROD, CEMENT, STEEL, MATERIALS, Price Variation Formula as

described herein shall be applicable (only for works executed during extended period, if any, subject to other conditions as described in this section).

2.17.2 **85%** component of executed Contract Value shall be considered for PVC calculations and remaining 15% shall be treated as fixed component. The basis for calculation of price variation in each category, their component, Base Index, shall be as under:

Sl. No.	CATEGORY	BASE INDEX	PERCENTAGE COMPONENT ('K')				
			CIVIL PACKAGES (See Note A/B/C)			MECHANICAL PACKAGES	Electrical, C&I, Material Management / Handling and other labour oriented packages
			A	**B****	**C**		
i)	LABOUR (ALL CATEGORIES)	'MONTHLY ALL-INDIA AVERAGE CONSUMER PRICE INDEX NUMBERS FOR INDUSTRIAL WORKERS' published by Labour Bureau, Ministry of Labour and Employment, Government of India. (Website: labourbureau.nic.in)	**40**	**25**	**30**	**65**	**80**
ii)	HIGH SPEED DIESEL OIL	Name of Commodity: HSD Commodity code: 1202000005 (**See Note E**)	**5**	**3**	**5**	**5**	**5**
iii)	WELDING ROD	Name of Commodity: MANUFACTURE OF BASIC METALS Commodity code:1314000000 (**See Note E**)				**15**	
iv)	CEMENT	Name of Commodity: ORDINARY PORTLAND CEMENT Commodity code: 1313050003 (**See Note E**)		**20**	**30**		
v)	STEEL (Structural and Reinforcement Steel)	Name of Commodity: MILD STEEL: LONG PRODUCTS Commodity code: 1314040000 (**See Note E**)		**25**			
vi)	ALL OTHER MATERIALS (Other than Cement & Steel)	Name of Commodity: ALL COMMODITIES Commodity code: 1000000000 (**See Note E**)	**40**	**12**	**20**		

Note: A) Cement & Steel: Free Issue (BHEL Scope)
B) Cement & Steel: In Contractor Scope
C) Cement in Contractor Scope, and Steel is Free Issue (BHEL Scope)

D) For Composite packages (i.e. Civil + Mechanical + Electrical and / or CI or Civil + Mechanical or Mechanical + Electrical and / or CI), the Component ('K') for various categories shall be as per respective packages as above

E) As per the 'MONTHLY WHOLE SALE PRICE INDEX' for the respective Commodity and Type, published by Office of Economic Adviser, Ministry of Commerce and Industry, Government of India. (Website: http://www.eaindustry.nic.in/download_data_0405.asp). Revisions in the index or commodity will be re adjusted accordingly.

2.17.3 **Void**

2.17.4 Payment / recovery due to variation in index shall be determined on the basis of the following notional formula in respect of the identified component ('K') viz LABOUR, HIGH SPEED DIESEL OIL, WELDING ROD, CEMENT, STEEL, MATERIALS.

$$P = K \times R \times \frac{(X_N - X_o)}{X_o}$$

Where

P = Amount to be paid/recovered due to variation in the Index for Labour, High Speed Diesel Oil, Welding Rod, Cement, Steel and Materials

K = Percentage component ('K') applicable for Labour, High Speed Diesel Oil, Welding Rod, Cement, Steel and Materials

R = Value of work done for the billing month (Excluding Taxes and Duties if payable extra)

XN = Revised Index for Labour, High Speed Diesel Oil, Welding Rod, Cement, Steel and Materials for the billing month under consideration

Xo = Index for Labour, High Speed Diesel Oil, Welding Rod, Cement, Steel and Materials as on the Base date.

2.17.5 **Base date shall be the calendar month of the schedule completion date (i.e. Actual Start date + Scheduled Contractual Completion period as per Letter of Intent / award and / or work order).**

2.17.6 PVC shall not be payable for the ORC amount, Supplementary / Additional Items, Extra works. However, PVC will be payable for items executed under quantity variation of BOQ items under originally awarded contract.

2.17.7 The contractor shall furnish necessary monthly bulletins in support of the requisite indices from the relevant websites along with his Bills.

2.17.8 The contractor will be required to raise the bills for price variation payments on a monthly basis along with the running bills irrespective of the fact whether any increase/decrease in the index for relevant categories has taken place or not. In case there is delay in publication of bulletins (final figure), the provisional values as published can be considered for payments and arrears shall be paid/recovered on getting the final values.

2.17.9 PVC shall be applicable only, during extended period of contract (if any) after the scheduled completion period and for the portion of work delayed/backlog for the reasons not attributable to the contractor.

However, the total Quantum of Price Variation Amount payable/recoverable shall be regulated as follows:

i) For the portion of shortfall/backlog not attributable to contractor, PVC shall be worked out on the basis of indices applicable for the respective month in which work is done. Base index shall be applicable as defined in clause 2.17.5

ii) In case of Force Majeure, the PVC shall be regulated as per (a) or (b) below.

a) Force Majeure is invoked before "Base Date" / "revised base date" (as explained below) OR immediately after "base date" / "revised base date" in continuation (i.e. during the period when PVC is not applicable):

1. Base date shall be revised: Revised Base date = Previous base date + duration of Force Majeure.

   No PVC will be applicable for the work done till revised base date.

2. PVC will be applicable for the work done after "base date"/" revised date" as the case may be (during extended period when delay is not attributable to contractor). PVC shall be worked out on the basis of indices applicable for the respective month in which work is done with base index as on "base date"/ "revised base date" as the case may be.

b) Force Majeure is invoked after "base date"/ "revised base date" as the case may be (during extended period when delay is not attributable to contractor).

1. PVC shall be applicable for the work done after revocation of Force Majeure.
2. PVC for the work done after revocation of Force Majeure shall be worked out on the basis of indices applicable for the respective month on which work is done excluding the effect of change in indices during total period of Force Majeure(s) invoked after "base date" / "revised base date" as the case may be. Base index shall be taken as on "base date" / "revised base date" as the case may be.

The total amount of PVC shall not exceed 15% of the cumulatively executed contract value. Executed Contract value for this purpose is exclusive of PVC, ORC, Supplementary / Additional items and Extra works except items due to quantity variation

Sl No: 12

Clauses 2.21 in GCC regarding Arbitration is amended as below

2.21 ARBITRATION & CONCILIATION

2.21.1 ARBITRATION:

2.21.1.1 Except as provided elsewhere in this Contract, in case Parties are unable to reach amicable settlement (whether by Conciliation to be conducted as provided in Clause 2.21.2 herein below or otherwise) in respect of any dispute or difference; arising out of the formation, breach, termination, validity or execution of the Contract; or, the respective rights and liabilities of the Parties; or, in relation to interpretation of any provision of the Contract; or. in any manner touching upon the Contract (hereinafter referred to as the 'Dispute'), then, either Party may, commence arbitration in respect of such Dispute by issuance of a notice in terms of section 21 of the Arbitration & Conciliation Act, 1996 (hereinafter referred to as the 'Notice'). The Notice shall contain the particulars of all claims to be referred to arbitration in sufficient detail and shall also indicate the monetary amount of such claim. The arbitration shall be conducted by a sole arbitrator to be appointed by the Head of the BHEL Power Sector Region issuing the Contract within 60 days of receipt of the complete Notice. The language of arbitration shall be English. The Arbitrator shall pass a reasoned award.

Subject as aforesaid, the provisions of Arbitration and Conciliation Act 1996 (India) or statutory modifications or re-enactments thereof and the rules made thereunder as in force from time to time shall apply to the arbitration proceedings under this clause. The seat of arbitration shall be **Chennai** (the place from where the contract is Issued). The Contract shall be governed by and be construed as per provisions of the laws of India. Subject to this provision 2.21.1.1 regarding ARBITRATION, the principal civil court exercising ordinary civil jurisdiction over the area where the seat of arbitration is located shall have exclusive jurisdiction over any DISPUTE to the exclusion of any other court.

2.21.1.2 In case of Contract with Public Sector Enterprise (PSE) or a Government Department, the following shall be applicable:

In the event of any dispute or difference relating to the interpretation and application of the provisions of commercial contract(s) between Central Public Sector Enterprises (CPSEs)/ Port Trusts inter se and also between CPSEs and Government Departments/Organizations (excluding disputes concerning Railways, Income Tax, Customs & Excise Departments), such dispute or difference shall be taken up by either party for resolution through

AMRCD (Administrative Mechanism for Resolution of CPSEs Disputes) as mentioned in DPE OM No. 4(1)/2013-DPE(GM)/FTS-1835 dated 22-05-2018 as amended from time to time.

2.21.1.3 The cost of arbitration shall initially be borne equally by the Parties subject to the final allocation thereof as per the award/order passed by the Arbitrator.

2.21.1.4 Notwithstanding the existence of any dispute or differences and/or reference for the arbitration, the Contractor shall proceed with and continue without hindrance the performance of its obligations under this Contract with due diligence and expedition in a professional manner unless the dispute inter-alia relates to cancellation, termination or short-closure of the Contract by BHEL.

2.21.2 CONCILIATION:

If at any time (whether before, during or after the arbitral or judicial proceedings), any Disputes (which term shall mean and include any dispute, difference, question or disagreement arising in connection with construction, meaning, operation, effect, interpretation or breach of the agreement, contract), which the Parties are unable to settle mutually, arise inter-se the Parties, the same may, be referred by either party to Conciliation to be conducted through Independent Experts Committee (IEC) to be appointed by competent authority of BHEL from the BHEL Panel of Conciliators.

Notes:

1. No serving or a retired employee of BHEL/Administrative Ministry of BHEL shall be included in the BHEL Panel of Conciliators.
2. Any other person(s) can be appointed as Conciliator(s) who is/are mutually agreeable to both the parties from outside the BHEL Panel of Conciliators.

The proceedings of Conciliation shall broadly be governed by Part-III of the Arbitration and Conciliation Act 1996 or any statutory modification thereof and as provided in Procedure 2.3 enclosed in Vol 1A Part II Chapter 8. The Procedure 2.3 together with its Formats will be treated as if the same is part and parcel hereof and shall be as effectual as if set out herein in this GCC.

The Contractor hereby agrees that BHEL may make any amendments or modifications to the provisions stipulated in the Procedure 2.3 enclosed in Vol 1A Part II Chapter 5 from time to time and confirms that it shall be bound by such amended or modified provisions of the Procedure 2.3 with effect from the date as intimated by BHEL to it.

2.21.3 No Interest payable to Contractor

Notwithstanding anything to the contrary contained in any other document comprising in the Contract, no interest shall be payable by BHEL to Contractor on any moneys or balances including but not limited to the Security Deposit, EMD, Retention Money, RA Bills or the Final Bill, or any amount withheld and/or appropriated by BHEL etc., which becomes or as the case may be, is adjudged to be due from BHEL to Contractor whether under the Contract or otherwise.

Sl No: 13

Procedure 2.3 that forms the part of Forms and Procedures is published as Chapter 8 in Volume IA Part II of this booklet (Volume-I Book-I).

Sl No: 14

The chapter Reverse auction procedure published in 'Forms and Procedures' of Volume I Book-II stands deleted. **Reverse Auction is not applicable for this tender.**

Sl. No.: 14

Existing format on Monthly Plan Review with Contractor, as available in Form No F-14 of Volume ID Forms and procedure stands Deleted. Form No.- F-14 (Rev 01) is enclosed.

Sl No.: 15

Existing format on Monthly Performance Evaluation of Contractor, as available in Form No F-15 of Volume ID Forms and procedure stands Deleted. Form No.- F-15 (Rev 02) is enclosed.

Sl No: 16

Existing format for Integrity Pact, as available in Volume ID Forms and procedure stands Deleted. Revised Format is enclosed in NIT.

Sl No: 17

Existing format for BANK GUARANTEE FOR SECURITY DEPOSIT, as available in Form No. F-11 (Rev 00) of Volume ID Forms and procedures stands deleted. Refer Proforma of Bank Guarantee (in lieu of Security Deposit)-Form WAM 22 provided in Chapter-10, Part-II of Volume-IA Technical Conditions of Contract.

Sl No: 18

Clause 2.15.5 of GCC in Extra Works is revised as under:

2.15.5: After eligibility of extra works is established and finally accepted by BHEL engineer / designer, payment will be released on competent authority's approval at the following rate.

MAN-HOUR RATE FOR ELIGIBLE EXTRA WORKS:

Single composite average labour man-hour rate, including overtime if any, supervision, use of tools and tackles and other site expenses and incidentals, consumables for carrying out any major rework / repairs / rectification / modification / fabrication as certified by site as may arise during the course of erection, testing, commissioning or extra works arising out of transit, storage and erection damages, payment, if found due will be at Rs 108/- per man hour.

VOLUME-IA PART – II CHAPTER 2 to CHAPTER 11

In the next 1006 pages as below:

CHAPTER	Details	No. of sheets
CHAPTER 2	Drawings	14
CHAPTER 3	Bore log details	313
CHAPTER 4	Technical Specifications	546
CHAPTER 5	Technical Specification and drawings for Labour Colony	10
CHAPTER 6	T&P Hire Charges	14
CHAPTER 7	HSE Plan For Site Operations By Subcontractor	82
CHAPTER 8	Procedure for conduct of Conciliation	11
CHAPTER 9	Proforma of Bank Guarantee (in lieu of Earnest Money)- Form WAM 23	03
CHAPTER 10	Proforma of Bank Guarantee (in lieu of Security Deposit)- Form WAM 22	03
CHAPTER 11	Format for Form no.: F-14 (Rev 01); Monthly Plan and Review with Contractors	06
CHAPTER 12	Format for Form no.: F-15 (Rev 02); Monthly Performance Evaluation of contractor	06

FIRST ANGLE PROJECTION

ALL DIMENSIONS ARE IN MM

DRAWING No. PE-DG-417-613-C050

CUSTOMER'S DRAWING No.

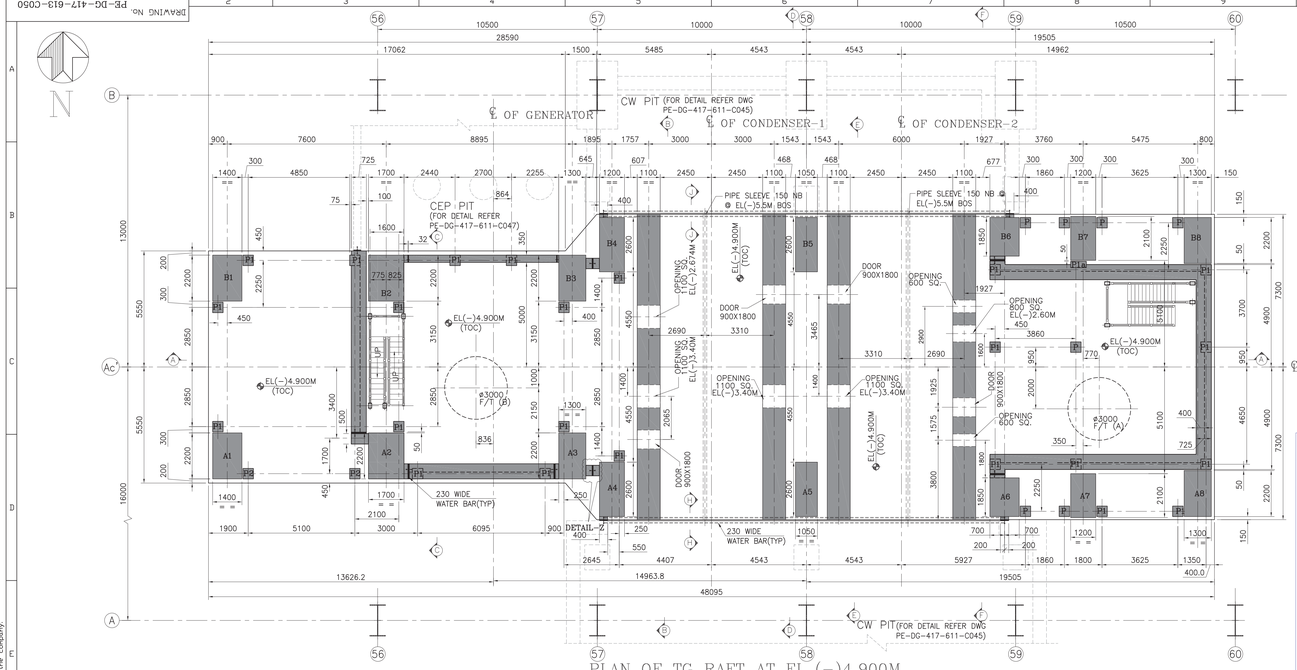

PLAN OF TG RAFT AT EL (-)4.900M.

(SCALE 1:100)

(EMBEDDED PLATE NOT MENTIONED FOR CLARITY)

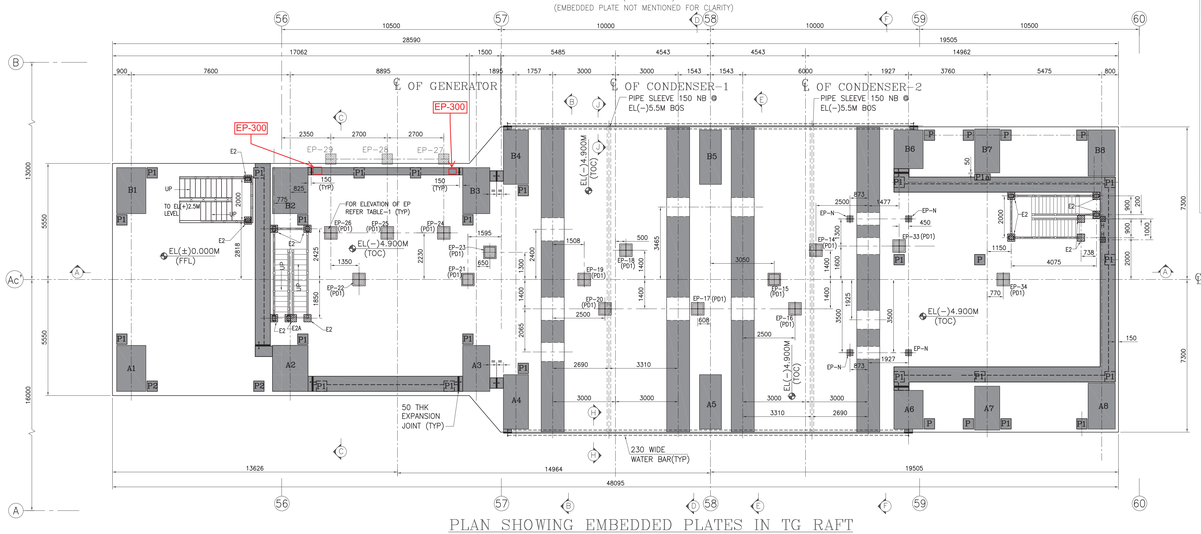

PLAN SHOWING EMBEDDED PLATES IN TG RAFT

(FROM EL(-)4.90M TO EL(±)0.00M) (SCALE 1:100)

(FOR CLARITY CS PLATES ON CONDENSER PEDESTALS NOT SHOWN, REFER PLAN AT EL(±)0.00M)

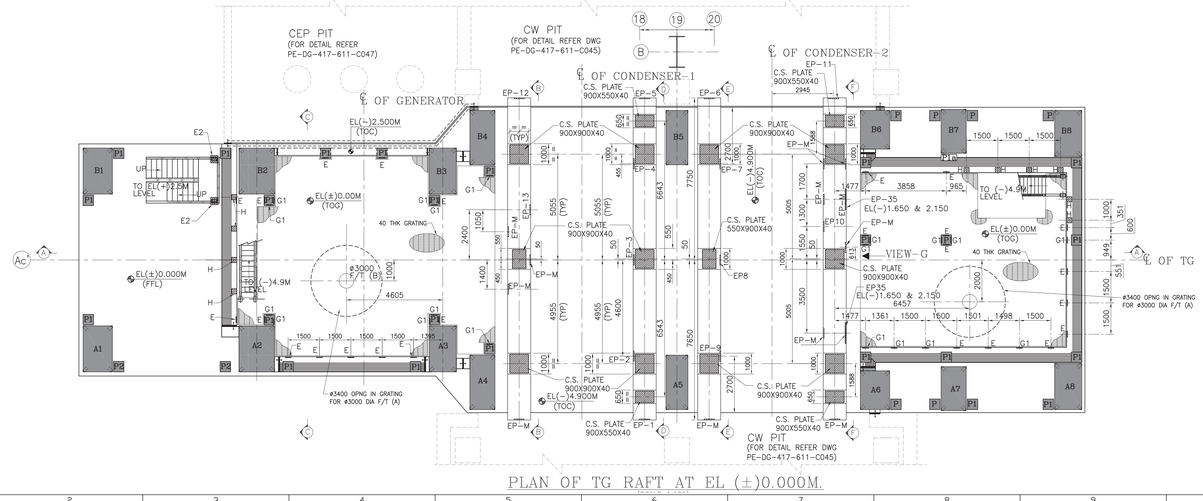

PLAN OF TG RAFT AT EL (±)0.000M.

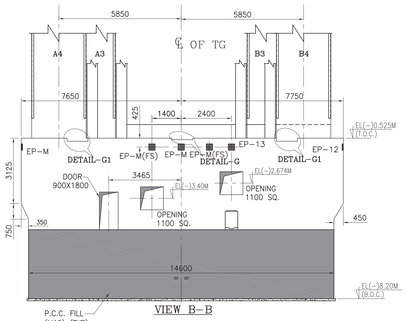

VIEW B-B

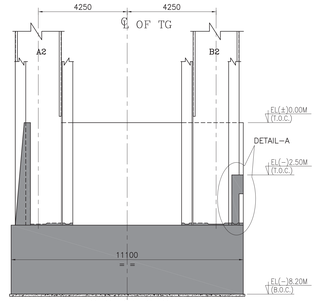

SECTION C-C

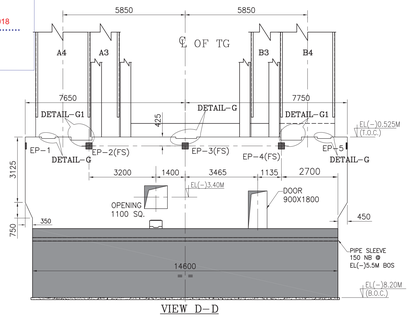

VIEW D-D

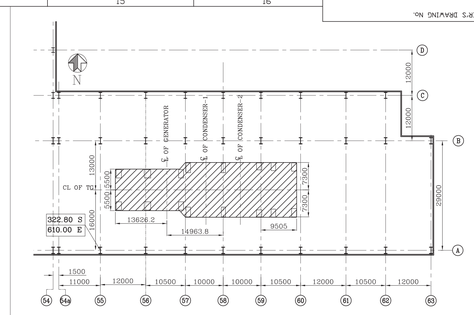

KEY PLAN

NOTES

1. ALL DIMENSIONS ARE IN MM. AND LEVEL ARE IN METER UNLESS OTHERWISE SPECIFIED.
2. ALL ELEVATIONS ARE REFERRED TO THE FINISHED GROUND FLOOR LEVEL OF POWER HOUSE BUILDING AS EL. ±0.00M WHICH CORRESPONDS TO RL. +81.500M ABOVE MEAN SEA LEVEL.
3. NO DIMENSIONS FROM THIS DRAWINGS ARE TO BE SCALED OFF AND FIGURED DIMENSIONS SHALL BE FOLLOWED, ASK IF IN DOUBT.
4. REF. DRG. PE-DG-417-600-C001 FOR GENERAL NOTES AND STANDARD DETAILS FOR R.C.C. WORKS.
5. BACKFILLING SHALL BE DONE WITH APPROVED EXCAVATED EARTH AT SITE. MATERIAL TO BE USED FOR BACKFILLING SHALL BE NON-EXPANSIVE, FREE FROM VEGETATION, ROOTS, SALTS, RUBBISH, LUMPS, ORGANIC MATTERS & ANY OTHER HARMFUL CHEMICALS ETC AND SHALL BE GOT APPROVED BY THE ENGINEER-IN-CHARGE. FILLING SHALL BE IN LAYERS NOT EXCEEDING 250MM THICKNESS AND EACH LAYER BE COMPACTED SO AS TO ACHIEVE AT LEAST 90% OF MAXIMUM DRY DENSITY AS PER IS: 2720 PART-VII.
6. THE LOCATION & ORIENTATION OF FOUNDATION SHOWN IN THIS DRG SHALL BE MATCHED WITH MECHANICAL SYSTEM LAYOUT & MANUFACTURER'S EQUIPMENT DRG BEFORE COMMENCEMENT OF WORK.
7. THIS DRWG. SHALL BE READ IN CONJUNCTION WITH CONTRACT TERMS, SPECIFICATIONS AND SCHEDULE OF ITEMS.
8. PLAIN CEMENT CONCRETE UNDER RAFT SHALL BE 100mm THICK OF GRADE M15 UNLESS NOTED OTHERWISE.
9. GRADE OF CONCRETE FOR TG RAFT, WALL, PEDESTALS SHALL BE ~~M25~~ M30 GRADE OF CONCRETE FOR TG COLUMN AND TG DECK SHALL BE M35.
10. EMBEDDED ITEMS COMPRISING BOLTS, PIPE SLEEVES ANCHOR BOLTS, FIXED POINTS, PLATES, STRUCTURAL STEEL SECTIONS ETC., SHALL BE FIXED ACCURATELY AND FIRMLY IN THEIR POSITIONS AS PER THE DRAWINGS. IT SHALL BE ENSURED BY THE CONTRACTOR THAT THESE POSITIONS ARE NOT DISTURBED DURING CONCRETING AND OTHER STAGES OF CONSTRUCTION.
11. EMBEDDED PARTS AT THE BOTTOM & THE VERTICAL FACES SHALL BE FIXED BEFORE THE INSTALLATION OF SIDE SHUTTERING AND THEIR POSITION GOT VERIFIED BY ENGINEER-IN-CHARGE.
12. REINFORCEMENT BAR INTERFERING WITH POCKETS, OPENINGS AND EMBEDMENT ETC. SHALL BE SUITABLY ADJUSTED AT SITE BUT SHALL NOT BE CUT.
13. COLD JOINT TREATMENT: OLD CONCRETE IS TO BE CLEANED WITH REMOVABLE OF LOOSE MATERIAL AND APPLYING CEMENT SLURRY BEFORE POURING FRESH CONCRETE.
14. FOR LUG DETAILS OF INSERTS AND CORNER ANGLES, REFER SEPARATE DRAWING PE-DG-417-613-C002.
15. FOR EARTHING GRID ARRANGEMENT , REFER ELECTRICAL DWG PE-DG-417-509-E005.
16. FOR INSERT PLATE LOCATION REFER RESPECTIVE MECHANICAL DRAWING GIVEN IN REFERENCE DRAWING.
17. TG RAFT CONCRETE SHALL BE CAST IN SINGLE POUR, NO JOINTS ARE ALLOWED.
18. CASTING OF TG MAT SHALL COMMENCE ONLY AFTER EARTHING CONDUCTORS, ELECTRICAL CONDUITS ARE LAID AS PER ELECTRICAL DRAWING.
19. CONCRETING OF BASE RAFT SHALL BE DONE BY CONTROLLING THE TEMPERATURE TO 25°C AT POUR BY USE OF ICE.

REFERENCE DRGS.

ENGINEERING DRGS.

1. PE-DG-417-100-M001 – PLOT PLAN
2. PE-DG-417-100-M002 – MAIN EQUIPMENT PLANT LAYOUT.
3. PE-DG-417-100-M003 – TG HALL EQUIPMENT LAYOUT PLAN AT EL (±) 0.00M.
4. 0-13100-V5152 (SHT_1) – FOUNDATION PLAN – TOP VIEW, SECTION A-A.
5. 0-13100-V5152 (SHT_2) – FOUNDATION PLAN – TOP VIEW, SECTIONS.
6. 0-13100-V5153 – FOUNDATION PLAN – SECTIONS
7. 0-13100-V5154 – FOUNDATION PLAN – OVERVIEW CONCRETE TOPPING
8. 0-13100-V5155 – LIST OF TG DECK EMBEDDMENTS
9. 01601070071C212 – EMBEDMENT DETAIL IN CONDENSER PEDESTAL
10. PE-DG-417-611-C045 – PH BLDG.– GA & R.C DETAILS OF CW PIT-UNIT-3, 4 & 5
11. PE-DG-417-611-C047 – PH BLDG.– GA & R.C DETAILS OF CEP PIT-UNIT-3, 4 & 5
12. PE-DG-417-613-C061 & C062 – TG FDN.– DETAILS OF TG PLATFORMS

CONSTRUCTION DRGS.

1. PE-DG-417-613-C051 – TG FOUNDATION – G.A. OF SUB-STRUCTURE RAFT SECTION UNIT-5
2. PE-DG-417-613-C052 – T.G FDN-RC DETAILS OF SUBSTRUCTURE UP TO (±) 0.0M UNIT-5

LEGEND

TOC – TOP OF CONCRETE
BOC – BOTTOM OF CONCRETE
C.J. – CONSTRUCTION JOINT
TYP – TYPICAL
P/P1/P2 – AUXILIARY COLUMN
PD1/PD2 – PEDESTAL FOR EP
℄ – CENTERLINE
▦ – EPs & PEDESTAL OF EPs
EP – EMBEDDED PLATE

TATA CONSULTING ENGINEERS LIMITED

VENDOR DOCUMENT REVIEW STATUS

- ☑ A Drawing/Document approved as submitted. Proceed with fabrication/construction.
- ☐ B Drawing/Document approved subjected to comments noted. Proceed with fabrication/ construction considering our commnets.
- ☐ C Our comments are noted on this marked up print.
- ☐ D Our commnets are noted in memo attached to the forwarding transmittal letter No. TCE.11005A-CV-VDT-096.....Dated 13-12-2018.....
- ☐ E Correct original of this drawing/document to reflect our comments and resubmit for approval.
- ☐ F Correct original of this drawing/document to reflect our comments and resubmit for records.
- ☐ G Drawings/Documents of this category are for information only and not for approval. Information furnished on the drawing/document is noted.
- ☐ H Drawing/Document reviewed against our previous comments and other revisions highlighted and identified by the vendor.
- ☐ I Drawing/Document returned without review.
- ☐ J Print not enclosed.

Approval conveyed herein neither relieves the Vendor/Contractor of his contractual obligations and his responsibilities for correctness of dimensions, materials of construction, weights, quantities, design details, assembly fits, performance requirements and conformity of the supplies with the Indian Statutory Laws as may be applicable, nor does it limit the purchaser's rights under the contract.

Reviewed by.....NC.....Date.....13-12-2018

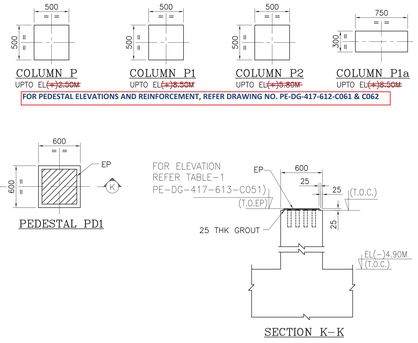

BHEL - PROJECT ENGINEERING MANAGEMENT (CIVIL)

THIS DRAWING IS RELEASED FOR CONSTRUCTION

STAMP ALL PREVIOUS REVISIONS AS SUPERSEDED

ISSUED BY	
NAME	SACHIN JAIN
SIGNATURE	Sachin
DATE	14/12/2018

BHEL-PROJECT ENGINEERING MANAGEMENT(CIVIL)	
THIS DRAWING MARKED(✓) IS RELEASED FOR	
☑ COMMENTS/APPROVAL	☐ FABRICATION
☐ PLANNING	☐ INFORMATION
☐ CONSTRUCTION	☐ AS BUILT DRAWING
STAMP ALL PREVIOUS REVISION AS SUPERSEDED	
ISSUED BY	
NAME	SACHIN JAIN
SIGNATURE	
DATE	21.11.2018

READ THIS DRAWING IN CONJUNCTION WITH PE-DG-417-613-C051.

1)BHEL may please note that all applicable input drawings are currently in the process of review/ yet to be submitted /not submitted with unit currently developing this drawing and with other units of BHEL. In view of all this for any interference of utilities (EP,cables, piping, ducts, etc.,). Orientation & coordinate for TG FOUNDATION area shall be checked by BHEL currently developing this drawing and with other units of BHEL. If there is any interference at later date which may lead to major revision in drawings & design; the same shall be ensured and incorporated in relevant drawings at BHEL's end. M/s BHEL shall stand guarantee for the final civil drawings based on input data considered. Any short comings/deviations from these resulting in cost and time over runs shall be borne solely by M/s BHEL. The Owner TSGENCO and consultant M/s TCE would not be party to such eventuality. Any eventual changes in sizing/civil works shall be taken up by M/s BHEL without affecting the project schedule. The risk will be solely on M/s BHEL.
2)Any changes or modifications carried out during engineering affecting drawing shall be reflected and incorporated by BHEL without any time and cost implications. Any update that is required in this drawing shall be reflected in applicable drawings in the as built drawings.

REV.	DATE	ALTD	CHD	APPD	REV.	DATE	ALTD	CHD	APPD

JOB NO. 417

STATUS CONTRACT

DISTRIBUTION

CUSTOMER: TELANGANA STATE POWER GENERATION CORPORATION LTD
TELANGANA, INDIA
5 x 800 MW YADADRI TPS, NALGONDA

CONSULTANT: TATA CONSULTING ENGINEERS LIMITED
BANGALORE INDIA

BHARAT HEAVY ELECTRICALS LTD
POWER SECTOR
PROJECT ENGINEERING MANAGEMENT
NOIDA

COPY RIGHT AND CONFIDENTIAL
The information on this document is the property of BHARAT HEAVY ELECTRICALS LIMITED it must not be used directly or indirectly in any way deterimental to the interest of the company.

DEPT		NAME	SIGN	DATE
CODE	DRN	SKS		21.11.2018
C	DESN	BKR		21.11.2018
	CHD	S.J		21.11.2018
	APPD	SBP		21.11.2018

TITLE: T.G. FDN -GA OF SUB-STRUCTURE RAFT UNIT-5

DEPT. | SCALE | SIGN | DRAWING NO. PE-DG-417-613-C050

SHEET 01 OF 01 | REV. 0

SIZE-A0

COMPUTER FILE NAME:

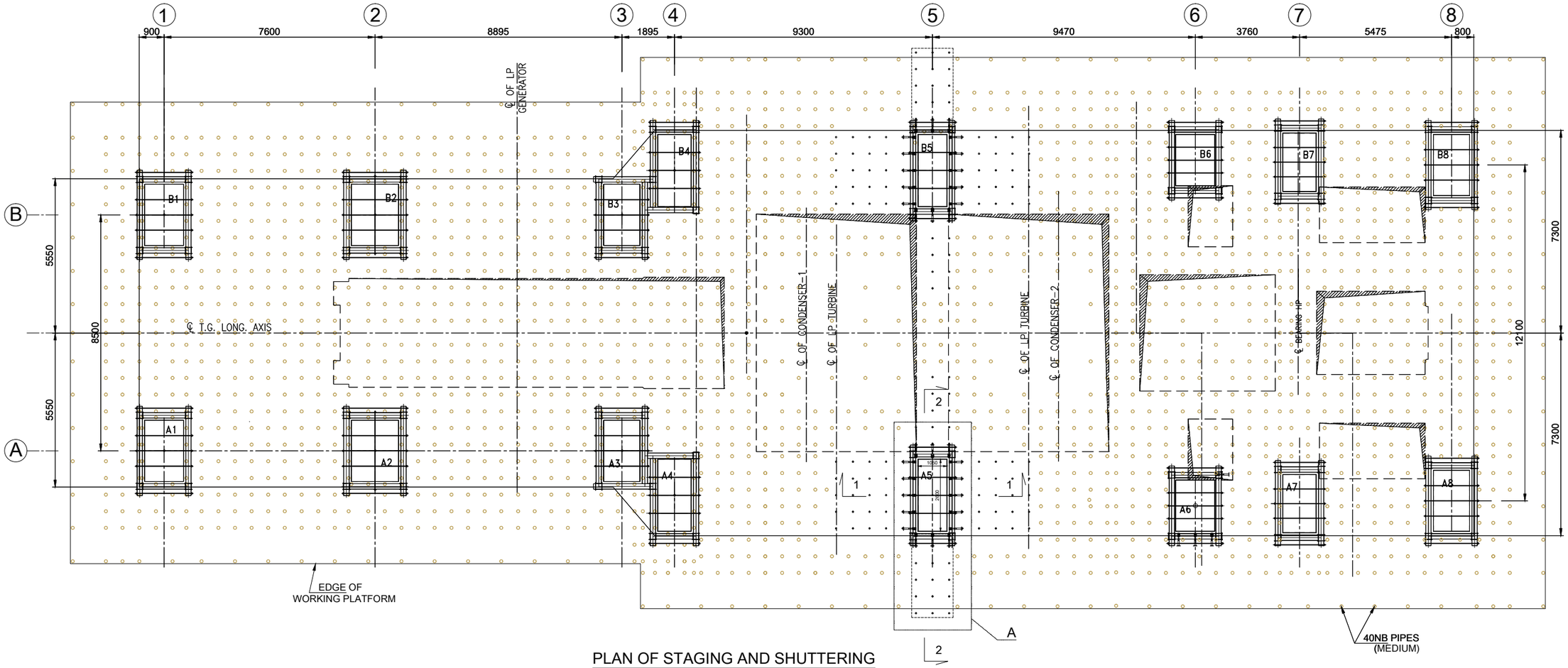

PLAN OF STAGING AND SHUTTERING
(SHOWING PIPES)
(SCALE 1 : 100)

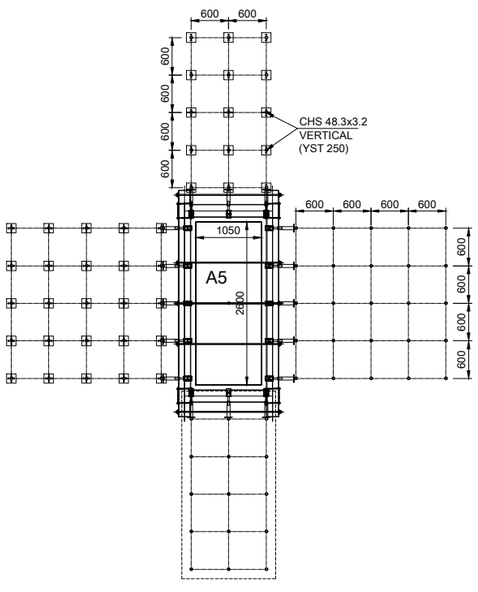

DETAIL -A
(PLAN OF STAGING
COLUMN A5 & B5)
(SCALE 1:50)

NOTES:-

1. ALL DIMENSIONS ARE IN mm AND LEVELS ARE IN METRES UNLESS OTHERWISE SPECIFIED.
2. RATE OF CONCRETE POUR = 1.5m/hr
3. INITIAL SETTING TIME OF CEMENT= 3hr
4. READ THIS DRAWING IN CONJUNCTION WITH: TSGENCO/BHEL/GAJA/002
5. FOR NOTES REFER DRAWING NO: TSGENCO/BHEL/GAJA/001

TATA CONSULTING ENGINEERS LIMITED
VENDOR DOCUMENT REVIEW STATUS
☑ A Drawing/Document approved as submitted. Proceed with fabrication/construction.
☐ B Drawing/Document approved subjected to comments noted. Proceed with fabrication/ construction considering our comments.
☐ C Our comments are noted on this marked up print.
☐ D Our comments are noted in memo attached to the forwarding transmittal letter No. ..... Dated 15-02-2021
☐ E Correct original of this drawing/document to reflect our comments and resubmit for approval.
☐ F Correct original of this drawing/document to reflect our comments and resubmit for records.
☐ G Drawings/Documents of this category are for information only and not for approval. Information furnished on the drawing/document is noted.
☐ H Drawing/Document reviewed against our previous comments and other revisions highlighted and identified by the vendor.
☐ I Drawing/Document returned without review.
☐ J Print not enclosed.
Approval conveyed herein neither relieves the Vendor/Contractor of his contractual obligations and his responsibilities for correctness of dimensions, materials of construction, weights, quantities, design details, assembly fits, performance requirements and conformity of the supplies with the Indian Statutory Laws as may be applicable, nor does it limit the purchaser's rights under the contract.
Reviewed by NC Date 15-02-2021

BHARAT HEAVY ELECTRICALS LTD
POWER SECTOR
PROJECT ENGINEERING MANAGEMENT
This approval status shall be interpreted as laid down in the contract and it shall not relieve the contractor from his contractual obligations.
APPROVAL CATEGORY AWARDED:
CAT I = Approved
CAT II = Approved with comments as Noted
CAT III = Not Approved: To Be Resubmitted
CAT IV = Reference Drawing
DEPARTMENT: CIVIL
NAME: Sachin Jain
SIGNATURE: Sd/-

REV. NO.	DATE	DESCRIPTION	CHKD	APPD
1	09-03-2020	ISSUED FOR APPROVAL		
0	03-02-2020	ISSUED FOR APPROVAL		

OWNER	TELANGANA POWER GENERATION CORPORATION	DATE: 03-02-2020
PROJECT	TELANGANA STATE POWER GENERATION CORPORATION LTD, 5X800 MW YADADRI TPS, NALGONDA	
CLIENT:	BHARAT HEAVY ELECTRICALS LIMITED :PSSR CHENNAI	DRN: VIJAY
CONTRACTORS NAME	M/S. GAJA ENGINEERING PVT LTD	CHKD:
TITLE:	T.G. FOUNDATION FOR STAGING FOR COLUMNS	APPD:
DETAILS:	LAYOUT OF CHS 48.3x4 SUPPORTING FRAME FOR COLUMNS	SCALE: AS SHOWN
JOB NO.	DRG. NO: TSGENCO/BHEL/GAJA/001	REV. NO. 1

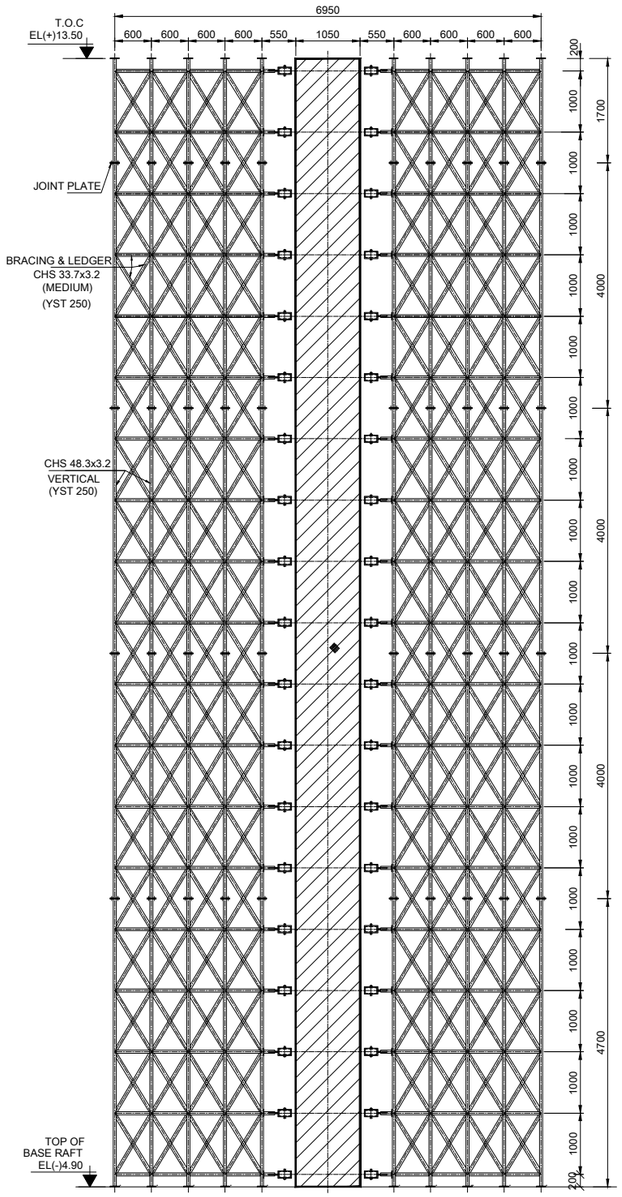

SECTION 1-1 (COLUMN-A5) (001)

(SCALE 1:50)

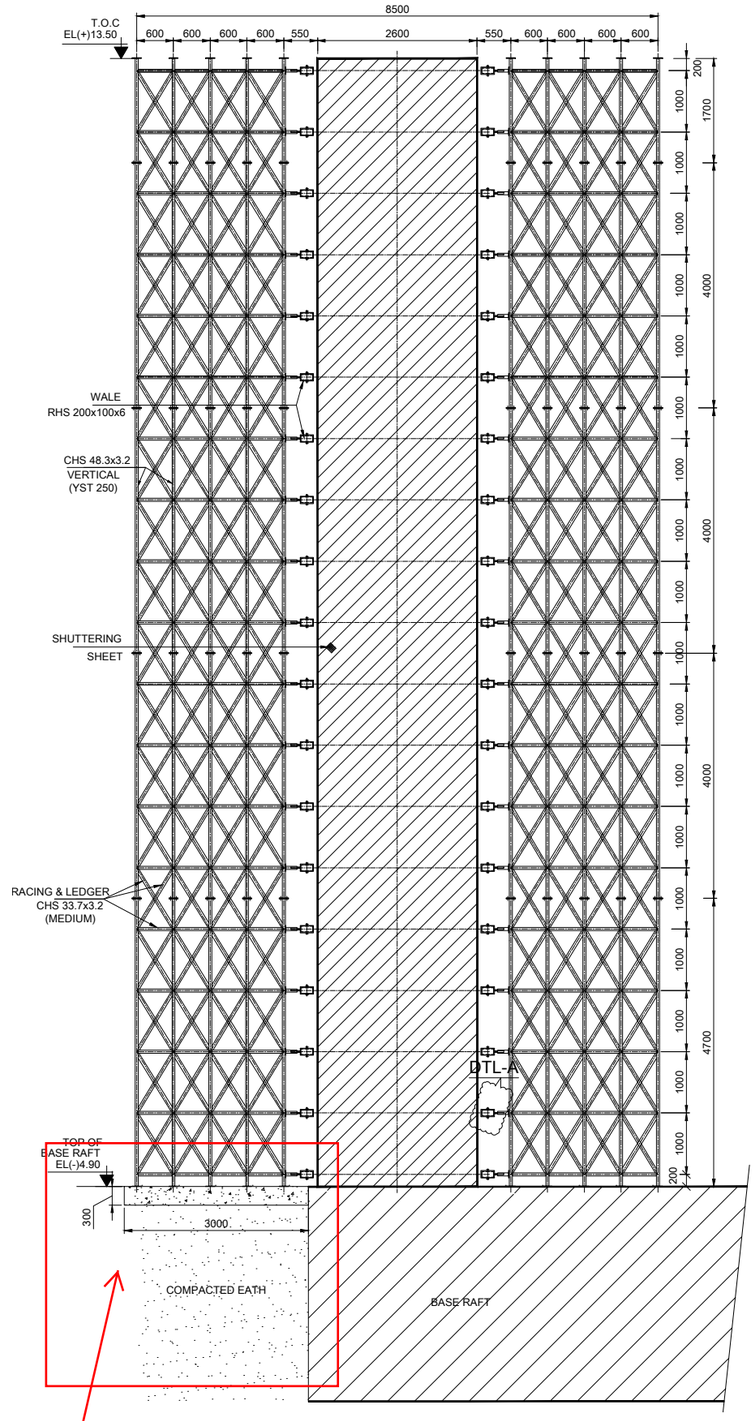

SECTION 2-2 (COLUMN A5) (001)

(SCALE 1:50)

Support shall be well campacted

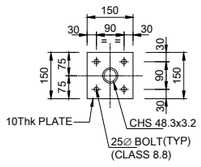

JOINT PLATE

(SCALE 1:10)

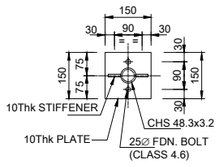

BASE PLATE

(SCALE 1:10)

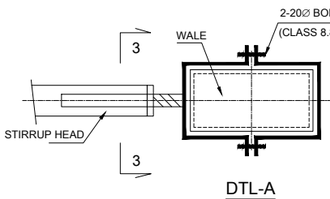

DTL-A

(SCALE 1:5)

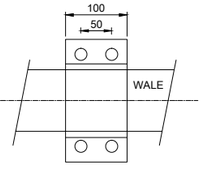

SECTION 3-3

(SCALE 1:5)

NOTES:-

1. ALL DIMENSIONS ARE IN mm AND LEVELS ARE IN METRES UNLESS OTHERWISE SPECIFIED.
2. ALL STRUCTURAL STEEL SHALL CONFORM TO IS: 2062 UNLESS OTHERWISE SPECIFIED.
3. FOR S.H.S & R.H.S SECTIONS REFER IS : 4923 & FOR CHS SECTION REFER IS : 1161.
4. ALL WELDS ARE 6mm THICK UNLESS OTHERWISE NOTED.
5. WELD THICKNESS SHOULD NOT EXCEED THE THICKNESS OF THE PARENT MEMBER.
6. WELDING PROCEDURE & TECHNIQUES CONFORMS TO IS: 816 & IS: 9595.
7. WHILE MAKING FORM WORK FOR TG DECK, THE CONCRETE DIMENSIONS SHALL BE FOLLOWED.
8. FULL SCALE MARKING WILL BE DONE AT SITE BEFORE TAKING UP FABRICATION.
9. BOLTS - CLASS 4.6 (YIELD STRENGTH = 240 N/mm^2)
   BOLTS - CLASS 8.8 (YIELD STRENGTH = 640 N/mm^2)
10. IT MUST ENSURED THAT ALL PIPES ARE STRAIGHT ANY DEFORMED PIPES SHALL NOT BE USED.
11. VERTICAL PIPE : CHS 48.3 x 3.2mm (MEDIUM) WITH YST 250 GRADE
    O.D = 48.3 mm ;
    WEIGHT = 3.56 kg/m ; AREA = 4.53 Cm^2
    MOMENT OF INERTIA = 11.59 Cm^4 ; SECTION MODULUS = 4.80 Cm^3
12. HORIZONTAL PIPE : CHS 33.7 x 3.2mm (MEDIUM) WITH YST 250 GRADE
    O.D = 33.7 mm ;
    WEIGHT = 2.41 kg/m ; AREA = 3.06 Cm^2
    MOMENT OF INERTIA = 3.61 Cm^4; SECTION MODULUS = 2.14 Cm^3
13. READ THIS DRG IN CONJUNCTION WITH DRG Nos:
    TSGENCO/BHEL/GAJA/001

TATA CONSULTING ENGINEERS LIMITED
VENDOR DOCUMENT REVIEW STATUS

- ☑ A Drawing/Document approved as submitted. Proceed with fabrication/construction.
- ☐ B Drawing/Document approved subjected to comments noted. Proceed with fabrication/ construction considering our commnets.
- ☐ C Our comments are noted on this marked up print.
- ☐ D Our commnets are noted in memo attached to the forwarding transmittal letter No. .....Dated:5-02-2021.....
- ☐ E Correct original of this drawing/document to reflect our comments and resubmit for approval.
- ☐ F Correct original of this drawing/document to reflect our comments and resubmit for records.
- ☐ G Drawings/Documents of this category are for information only and not for approval. Information furnished on the drawing/document is noted.
- ☐ H Drawing/Document reviewed against our previous comments and other revisions highlighted and identified by the vendor.
- ☐ I Drawing/Document returned without review.
- ☐ J Print not enclosed.

Approval conveyed herein neither relieves the Vendor/Contractor of his contractual obligations and his responsibilities for correctness of dimensions, materials of construction, weights, quantities, design details, assembly fits, performance requirements and conformity of the supplies with the Indian Statutory Laws as may be applicable, nor does it limit the purchaser's rights under the contract.

Reviewed by..NC.....NC.....Date.15-02-2021.....

BHARAT HEAVY ELECTRICALS LTD
POWER SECTOR
PROJECT ENGINEERING MANAGEMENT

This approval status shall be interpreted as laid down in the contract and it shall not relieve the contractor from his contractual obligations.

APPROVAL CATEGORY AWARDED:
CAT. I = Approved
CAT II = Approved with comments as Noted
CAT III = Not Approved / To Be Resubmitted
CAT IV = Reference Drawing

DEPARTMENT	CIVIL
NAME	SIGNATURE
Sachin Jain	-Sd-

REV. NO.	DATE	DESCRIPTION	CHKD	APPD
1	09-03-2020	ISSUED FOR APPROVAL		
0	03-02-2020	ISSUED FOR APPROVAL		

OWNER	TELANGANA POWER GENERATION CORPORATION	DATE: 03-02-2020
PROJECT	TELANGANA STATE POWER GENERATION CORPORATION LTD, 5X800 MW YADADRI TPS, NALGONDA	03-02-2020
CLIENT:	BHARAT HEAVY ELECTRICALS LIMITED :PSSR CHENNAI	DRN: VIJAY
CONTRACTORS NAME	M/S. GAJA ENGINEERING PVT LTD	CHKD:
TITLE:	T.G. FOUNDATION FOR STAGING FOR COLUMNS	APPD:
DETAILS:	SECTIONAL DTLS OF SUPPORTING STRUCTURE USING CHS 48.3x4	SCALE: AS SHOWN
JOB NO.	DRG. NO: TSGENCO/BHEL/GAJA/002	REV. NO. 1

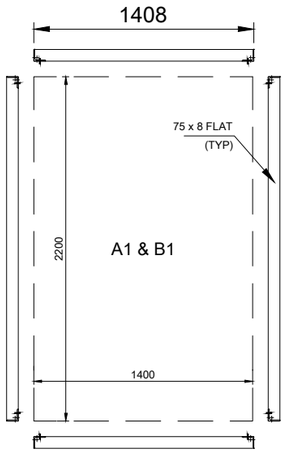

COLUMN A1 & B1
(SCALE 1:20)

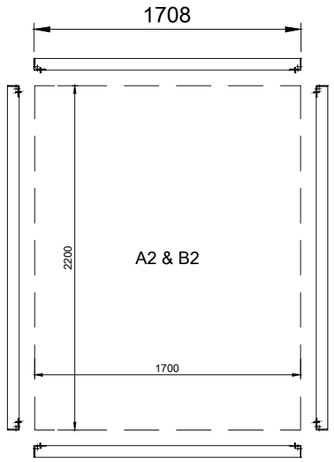

COLUMN A2 & B2
(SCALE 1:20)

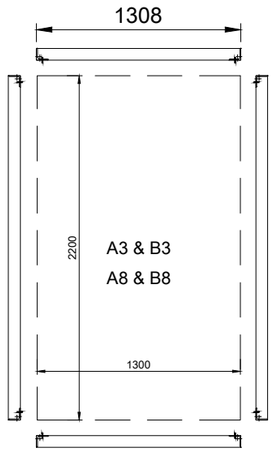

COLUMN A3, B3, A8 & B8
(SCALE 1:20)

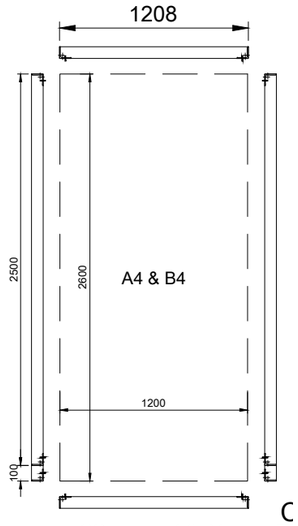

COLUMN A4 & B4
(SCALE 1:20)

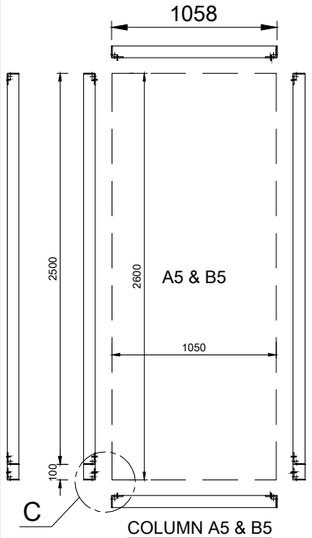

COLUMN A5 & B5
(SCALE 1:20)

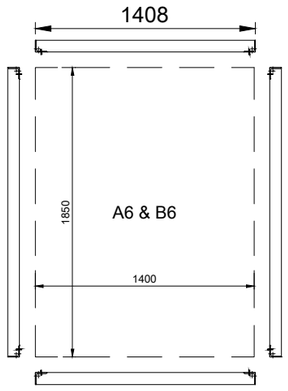

COLUMN A6 & B6
(SCALE 1:20)

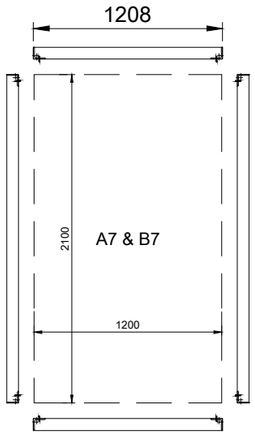

COLUMN A7 & B7
(SCALE 1:20)

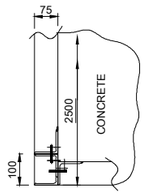

DETAIL - C
(SCALE 1:10)

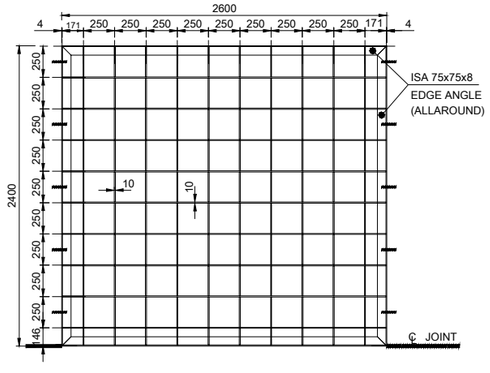

TYP DTL OF 2.4m x 2.6m HEIGHT SHUTTER
(OUTER FACE)

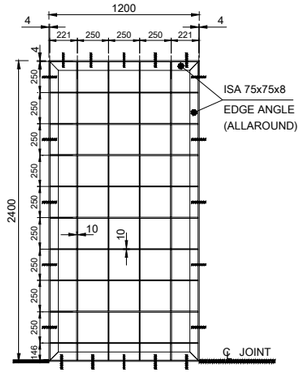

TYP DTL OF 2.4mx1.2m HEIGHT SHUTTER
(OUTER FACE)

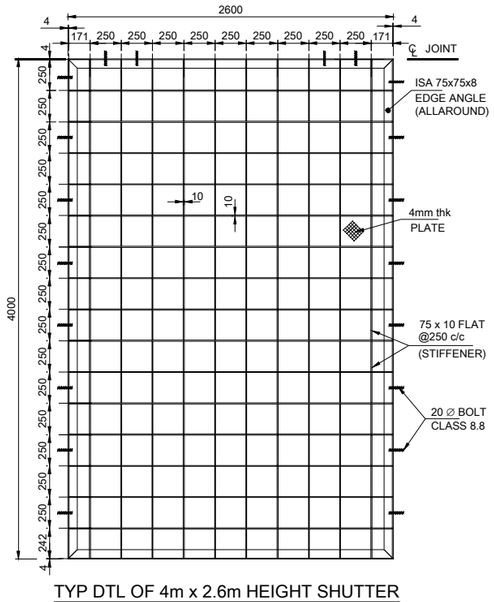

TYP DTL OF 4m x 2.6m HEIGHT SHUTTER
(OUTER FACE)
(SCALE 1:25)

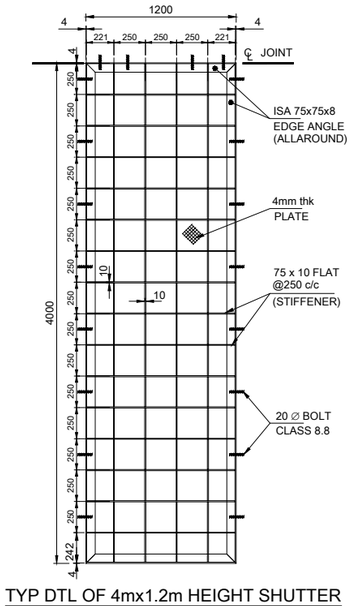

TYP DTL OF 4mx1.2m HEIGHT SHUTTER
(OUTER FACE)
(SCALE 1:25)

TATA CONSULTING ENGINEERS LIMITED
VENDOR DOCUMENT REVIEW STATUS

- ☑ A Drawing/Document approved as submitted. Proceed with fabrication/construction.
- ☐ B Drawing/Document approved subjected to comments noted. Proceed with fabrication/ construction considering our commnets.
- ☐ C Our comments are noted on this marked up print.
- ☐ D Our commnets are noted in memo attached to the forwarding transmittal letter No. ..... Dated 15-02-2021
- ☐ E Correct original of this drawing/document to reflect our comments and resubmit for approval.
- ☐ F Correct original of this drawing/document to reflect our comments and resubmit for records.
- ☐ G Drawings/Documents of this category are for information only and not for approval. Information furnished on the drawing/document is noted.
- ☐ H Drawing/Document reviewed against our previous comments and other revisions highlighted and identified by the vendor.
- ☐ I Drawing/Document returned without review.
- ☐ J Print not enclosed.

Approval conveyed herein neither relieves the Vendor/Contractor of his contractual obligations and his responsibilities for correctness of dimensions, materials of construction, weights, quantities, design details, assembly fits, performance requirements and conformity of the supplies with the Indian Statutory Laws as may be applicable, nor does it limit the purchaser's rights under the contract.

Reviewed by: NC Date: 15-02-2021

NOTES:-

1. ALL DIMENSIONS ARE IN mm AND LEVELS ARE IN METRES UNLESS OTHERWISE SPECIFIED.
2. GRADE OF CONCRETE SHALL BE M-25.
3. GRADE OF STEEL SHALL BE Fe-500.
4. ALL STRUCTURAL STEEL SHALL CONFORM TO IS: 2062.
5. WHILE MAKING FORM WORK FOR COLUMNS, THE CONCRETE DIMENSIONS SHALL BE FOLLOWED.
6. ALL WELDS ARE 8mm THK CONTINUOUS FILLETS UNLESS OTHERWISE NOTED.
7. WELDING SHALL BE CONFORM TO IS:816-1969.
8. WELD THICKNESS SHOULD NOT EXCEED THE THICKNESS OF THE PARENT MEMBER.
9. MIN. 200mm THICK CONCRETE STARTER TO BE PROVIDED FOR ALL COLUMNS BEFORE ERECTING THE COLUMN SHUTTER.
10. READ THIS DRAWING IN CONJUNCTION WITH: TSGENCO/BHEL/GAJA/001 TO 006.
11. ASSUMED BEARING CAPACITY OF SOIL = 15T/Sq.m. THE ASSUMED BEARING CAPACITY OF SOIL SHALL BE CONFIRMED AT SITE.
12. RATE OF CONCRETE POUR = 1.5m/hr
13. INITIAL SETTING TIME OF CEMENT= 3hr

BHARAT HEAVY ELECTRICALS LTD
POWER SECTOR
PROJECT ENGINEERING MANAGEMENT

This approval status shall be interpreted as laid down in the contract and it shall not relieve the contractor from his contractual obligations.

APPROVAL CATEGORY AWARDED.

CAT.I = Approved
CAT II = Approved with comments as Noted
CAT III = Not Approved/To Be Resubmitted
CAT IV = Reference Drawing

DEPARTMENT	CIVIL
NAME	SIGNATURE
Sachin Jain	Sd/-

REV. NO.	DATE	DESCRIPTION	CHKD	APPD
1	09-03-2020	ISSUED FOR APPROVAL		
0	03-02-2020	ISSUED FOR APPROVAL		

OWNER	TELANGANA POWER GENERATION CORPORATION	DATE: 03-02-2020
PROJECT	TELANGANA STATE POWER GENERATION CORPORATION LTD, 5X800 MW YADADRI TPS, NALGONDA	
CLIENT:	BHARAT HEAVY ELECTRICALS LIMITED :PSSR CHENNAI	DRN: VIJAY
CONTRACTORS NAME	M/S. GAJA ENGINEERING PVT LTD	CHKD:
TITLE:	T.G. FOUNDATION - STAGING AND SHUTTERING ARRANGEMENT OF COLUMNS (COLUMN SHUTTERING DETAILS)	APPD:
DETAILS:	SHUTTERING DETAILS FOR COLUMNS	SCALE: AS SHOWN
JOB NO.	DRG. NO: TSGENCO/BHEL/GAJA/006	REV. NO. 1

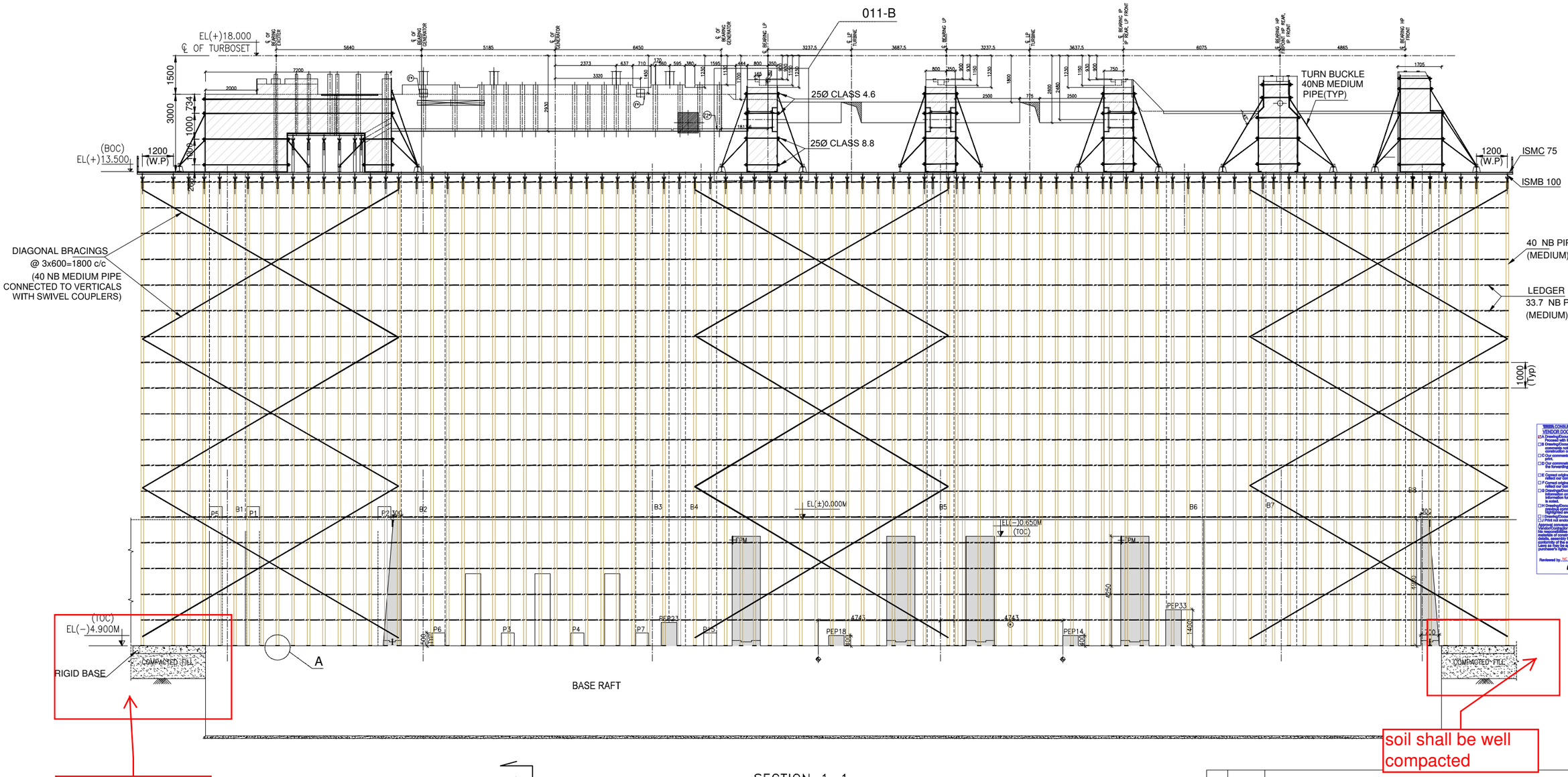

SECTION 1–1

(SCALE 1:100)

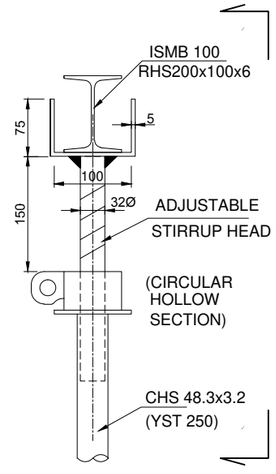

TYP DETAIL OF
ADJUSTABLE STIRRUP HEAD

CIRCULAR HOLLOW SECTION:-CHS
RECTANGULAR HOLLOW SECTION:-RHS
(SCALE 1:5)

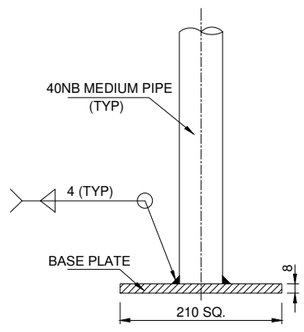

DETAIL-A

(SCALE 1:5)

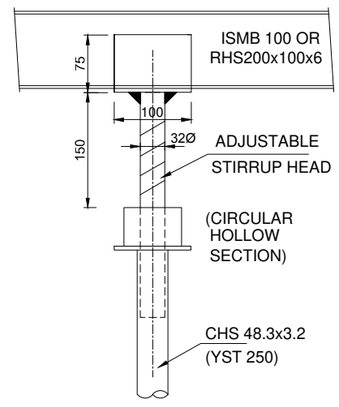

SECTION 1–1

NOTES:–

1. ALL DIMENSIONS ARE IN mm AND LEVELS ARE IN METRES UNLESS OTHERWISE SPECIFIED.
2. READ THIS DRG IN CONJUNCTION WITH DRG Nos: TSGENCO/BHEL/GAJA/011 TO 019.

BHARAT HEAVY ELECTRICALS LTD
POWER SECTOR
PROJECT ENGINEERING MANAGEMENT

This approval status shall be interpreted as laid down in the contract and it shall not relieve the contractor from his contractual obligations.

APPROVAL CATEGORY AWARDED:
CAT. I = Approved
CAT II = Approved with comments as Noted
CAT III = Not Approved / To Be Resubmitted
CAT IV = Reference Drawing

DEPARTMENT	CIVIL
NAME	SIGNATURE
Sachin Jain	Sd/-

BHEL CONSULTING ENGINEERS LIMITED
VENDOR DOCUMENT REVIEW STATUS

☐A Drawing/Document approved as submitted. Proceed with fabrication/construction.
☐B Drawing/Document approved subjected to comments noted. Proceed with fabrication/ construction incorporating comments.
☐C Our comments are noted on this marked up print.
☐D Our comments are noted in memo attached to the forwarding transmittal letter No.
☐E Correct original of this drawing/document to reflect our comments and resubmit for approval.
☐F Correct original of this drawing/document to reflect our comments and resubmit for records.
☐G Drawings/documents of this category are for information only and not for approval.
☐H Information furnished on the drawing/document is noted.
☐I Drawing/Document endorsed against our comments is returned herewith. Copies signoffed and identified by the vendor.
☐J Drawing/Document returned without review.
☐K Print not endorsed.

Approval/ conveyed herein neither relieves the Vendor of responsibility for correctness of dimensions and interconnection of re-confirmed or dimensions, materials of construction, weights, quantities, design details, assembly fits, performance requirements and conformity of the supplies with the Indian Statutory Regulations and Specifications and shall in no way limit the purchaser's rights under the contract.

Reviewed by: NC Date:

REV. NO.	DATE	DESCRIPTION	CHKD	APPD
1	09-03-2020	ISSUED FOR APPROVAL		
0	03-02-2020	ISSUED FOR APPROVAL		

OWNER	TELANGANA POWER GENERATION CORPORATION	DATE: 03-02-2020
PROJECT	TELANGANA STATE POWER GENERATION CORPORATION LTD, 5X800 MW YADADRI TPS, NALGONDA	
CLIENT:	BHARAT HEAVY ELECTRICALS LIMITED :PSSR CHENNAI	DRN: VIJAY
CONTRACTORS NAME	M/S. GAJA ENGINEERING PVT LTD	CHKD:
TITLE:	T.G. FOUNDATION FOR STAGING & SHUTTERING ARRANGEMENT OF DECK SLAB	APPD:
DETAILS:	STAGING AND SHUTTERING ARRANGEMENT FOR BEAMS AT EL:(+)13.50m LVL LONG. SECTION (SECTION 1-1)	SCALE: AS SHOWN
JOB NO.	DRG. NO: TSGENCO/BHEL/GAJA/014	REV. NO. 1

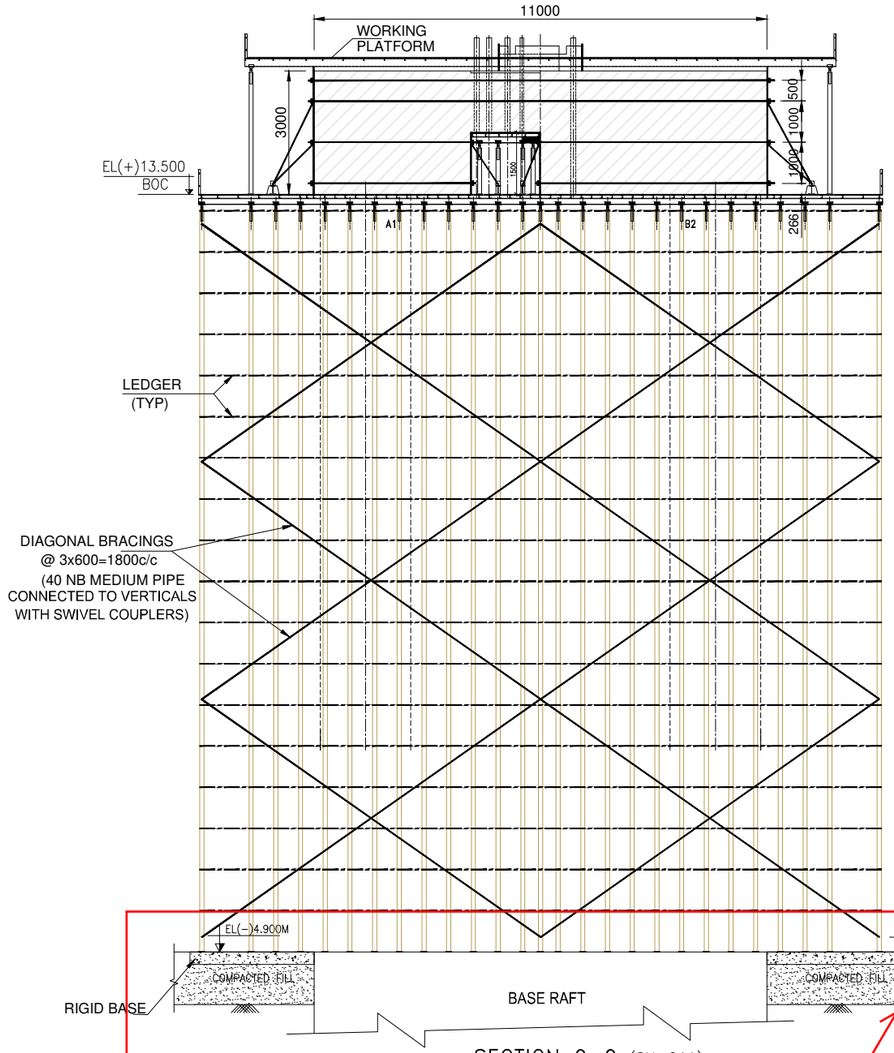

SECTION 9-9 (SH-011)
(SCALE 1:100)

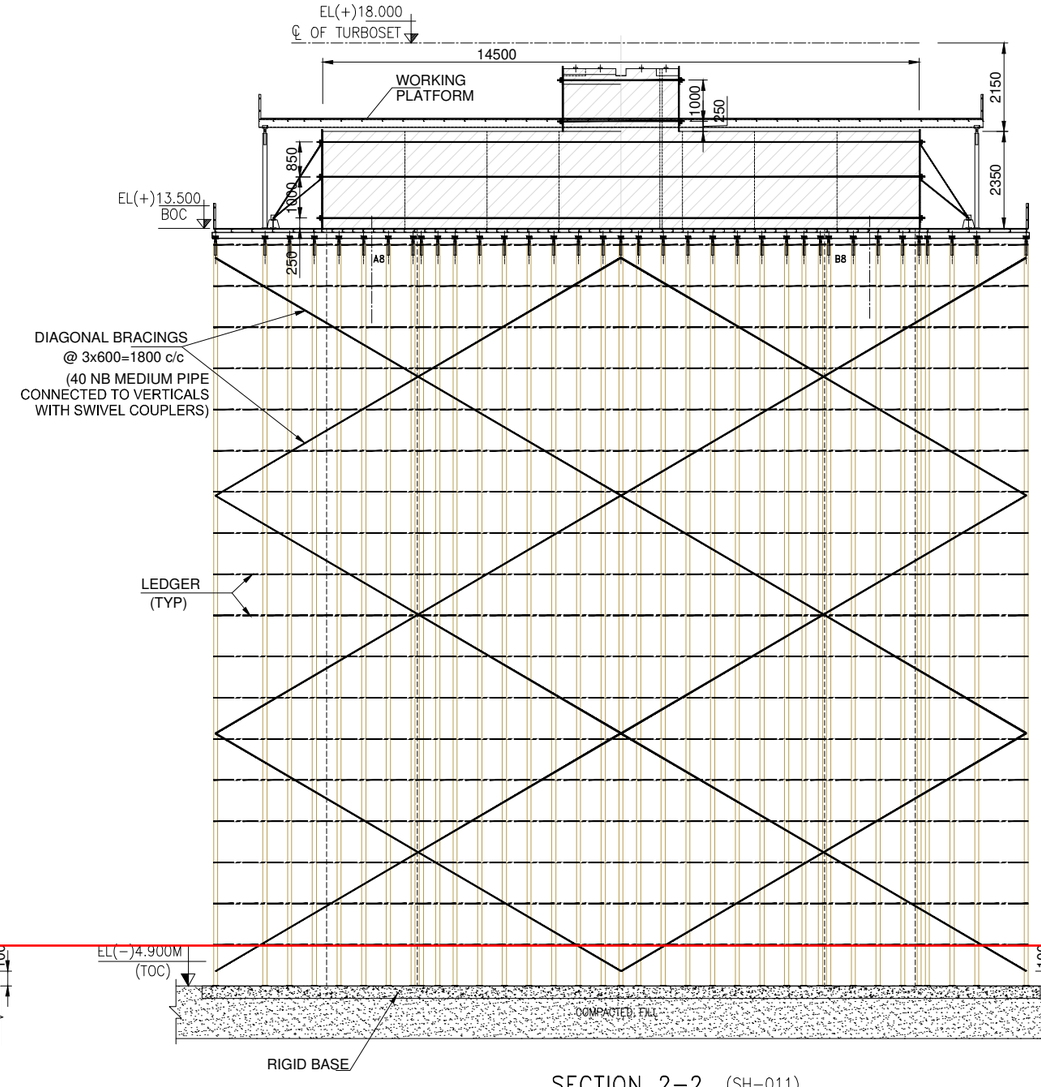

SECTION 2-2 (SH-011)
(SCALE 1:100)

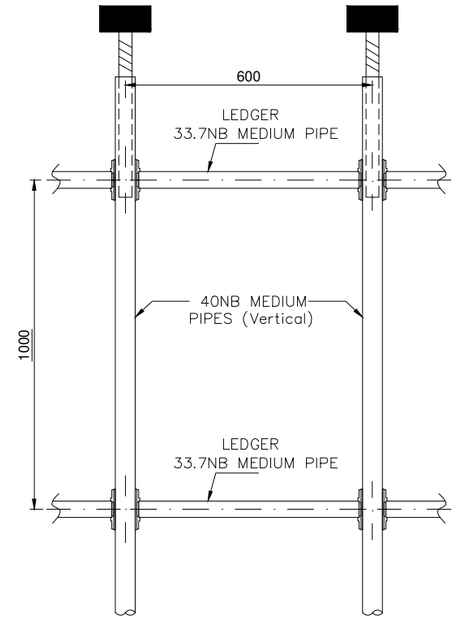

ELEVATION
TYPICAL CONNECTION
BETWEEN VERTICAL
PIPE AND LEDGERS
(SCALE 1:10)

soil SHALL WE WELL COMPACTED

NOTES:-

1. ALL DIMENSIONS ARE IN mm AND LEVELS ARE IN METRES UNLESS OTHERWISE SPECIFIED.
2. READ THIS DRG IN CONJUNCTION WITH DRG Nos: TSGENCO/BHEL/GAJA/011 TO 019.

BHARAT HEAVY ELECTRICALS LIMITED
VENDOR DOCUMENT REVIEW STATUS
☐A Drawing/Document approved as submitted. Proceed with fabrication/construction.
☐B Drawing/Document approved subjected to comments noted. Proceed with fabrication/ construction considering our comments.
☐C Our comments are noted on this marked up copy.
☐D Our comments are noted in memo attached to the forwarding transmittal letter No. _____ Dated _____
☐E Correct original of this drawing/document to reflect our comments and resubmit for approval.
☐F Correct original of this drawing/document to reflect our comments and resubmit for records.
☐G Drawings/Documents of this category are for information only and not for approval. Information furnished on the drawing/document is noted.
☐H Drawing/Document reviewed against our specification requirements. Deviations if any highlighted and identified by re-vendor.
☐I Drawing/Document returned without review.
☐J Print not enclosed.
Approval conveyed herein neither relieves the contractor of his contractual obligations nor BHEL of its responsibilities for correctness of dimensions, materials of construction, weights, quantities, design details, assembly fits, performance requirements and conformity of the supplies with the Indian Statutory Regulations and Rules. Approval shall in no way limit the purchaser's rights under the contract.
Reviewed by: NC _____ Date: 03-09-2021
NC

BHARAT HEAVY ELECTRICALS LTD
POWER SECTOR
PROJECT ENGINEERING MANAGEMENT
This approval status shall be interpreted as laid down in the contract and it shall not relieve the contractor from his contractual obligations.
APPROVAL CATEGORY AWARDED.
CAT.I = Approved
CAT II = Approved with comments as Noted
CAT III = Not Approved / To Be Resubmitted
CAT IV = Reference Drawing

DEPARTMENT	CIVIL
NAME	SIGNATURE
Sachin Jain	-Sd-

REV. NO.	DATE	DESCRIPTION	CHKD	APPD
1	09-03-2020	ISSUED FOR APPROVAL		
0	03-02-2020	ISSUED FOR APPROVAL		

OWNER	TELANGANA POWER GENERATION CORPORATION	DATE: 03-02-2020
PROJECT	TELANGANA STATE POWER GENERATION CORPORATION LTD, 5X800 MW YADADRI TPS, NALGONDA	
CLIENT:	BHARAT HEAVY ELECTRICALS LIMITED :PSSR CHENNAI	DRN: VIJAY
CONTRACTORS NAME	M/S. GAJA ENGINEERING PVT LTD	CHKD:
TITLE:	T.G. FOUNDATION FOR STAGING & SHUTTERING ARRANGEMENT OF DECK SLAB	APPD:
DETAILS:	STAGING AND SHUTTERING ARRANGEMENT FOR BEAMS AT EL:(+)13.50m LVL SECTION 2-2 & SECTION 9-9	SCALE: AS SHOWN
JOB NO.	DRG. NO: TSGENCO/BHEL/GAJA/015	REV. NO. 1

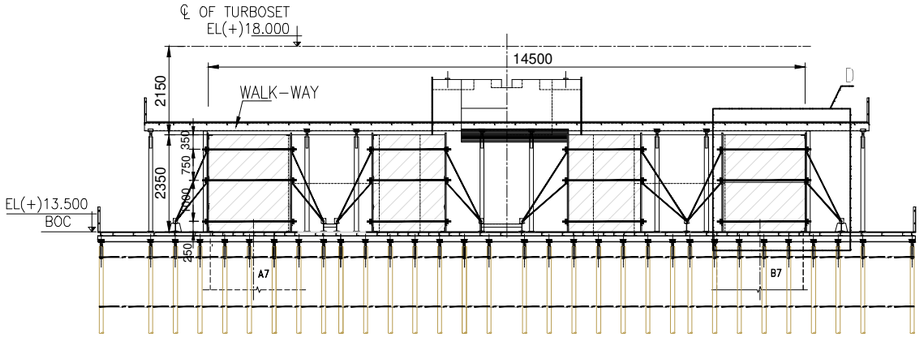

SECTION 3-3 (SH-011)

(SCALE 1:100)

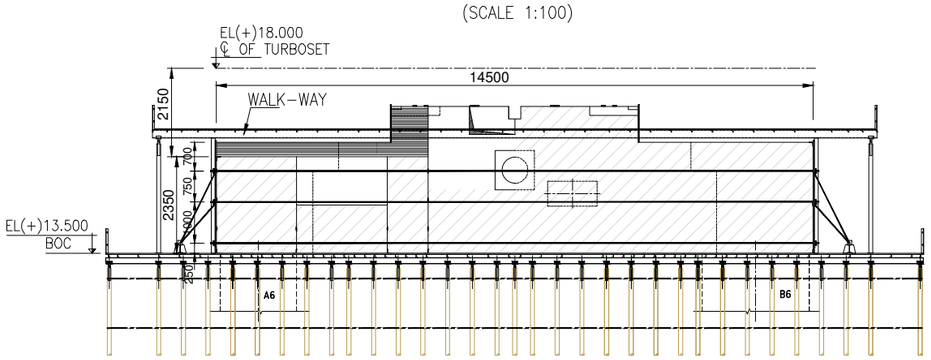

SECTION 4-4 (SH-011)

(SCALE 1:100)

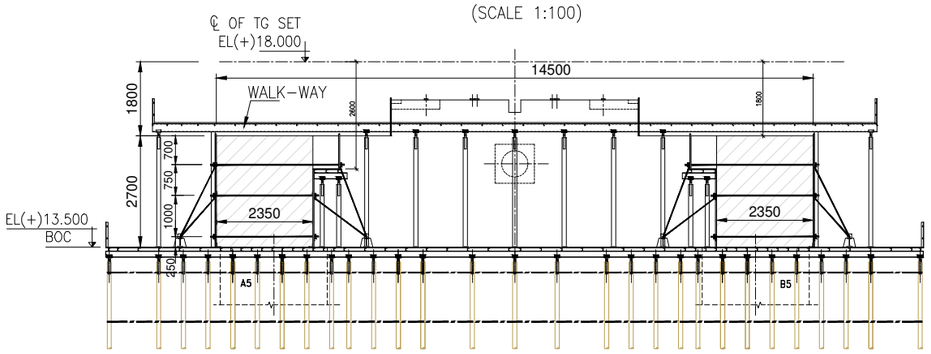

SECTION 5-5 (SH-011)

(SCALE 1:100)

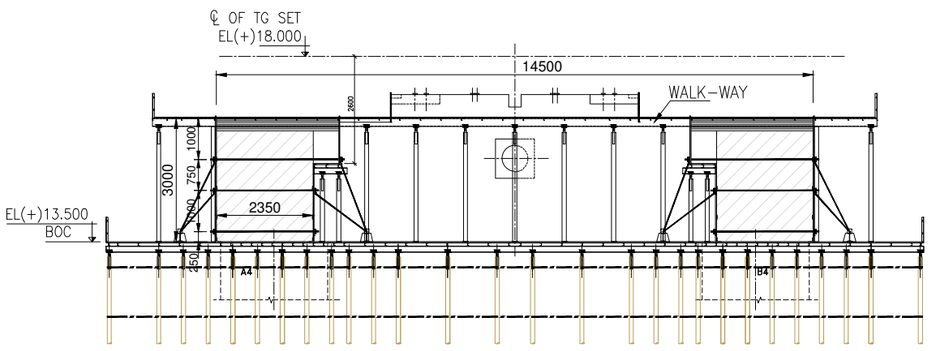

SECTION 6-6 (SH-011)

(SCALE 1:100)

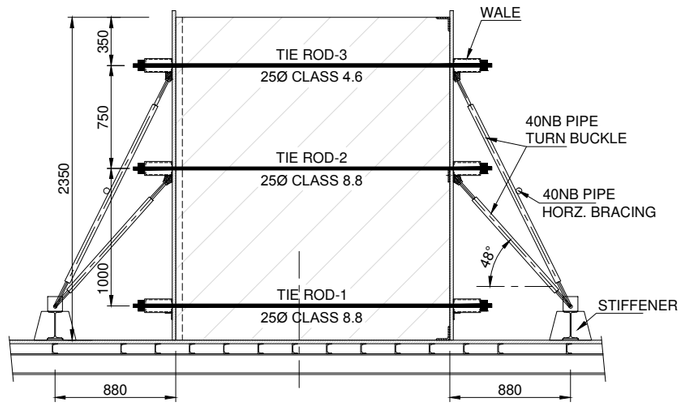

DETAIL-D

(SCALE 1:40)

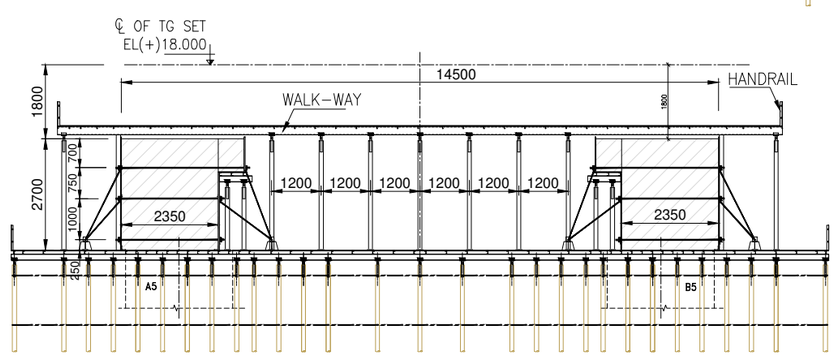

TYP DTL OF WALK-WAY

(SCALE 1:100)

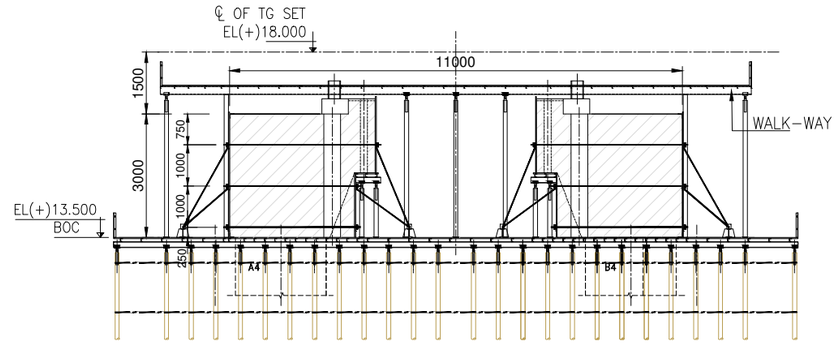

SECTION 7-7 (SH-011)

(SCALE 1:100)

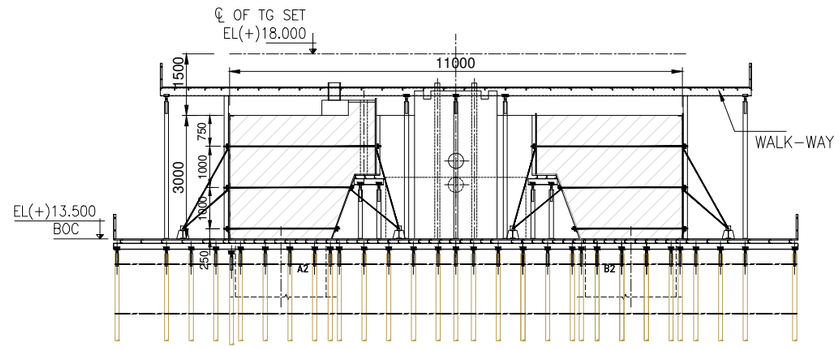

SECTION 8-8 (SH-011)

(SCALE 1:100)

NOTES:-

1. ALL DIMENSIONS ARE IN mm AND LEVELS ARE IN METRES UNLESS OTHERWISE SPECIFIED.
2. READ THIS DRG IN CONJUNCTION WITH DRG Nos: TSGENCO/BHEL/GAJA/011 TO 019.

BHARAT HEAVY ELECTRICALS LTD
POWER SECTOR
PROJECT ENGINEERING MANAGEMENT

This approval status shall be interpreted as laid down in the contract and it shall not relieve the contractor from his contractual obligations.

APPROVAL CATEGORY AWARDED:

CAT-I = Approved
CAT II = Approved with comments as Noted
CAT III = Not Approved To Be Resubmitted
CAT IV = Reference Drawing

DEPARTMENT	CIVIL
NAME	SIGNATURE
Sachin Jain	Sd/-

REV. NO.	DATE	DESCRIPTION	CHKD	APPD
1	09-03-2020	ISSUED FOR APPROVAL		
0	03-02-2020	ISSUED FOR APPROVAL		

OWNER	TELANGANA POWER GENERATION CORPORATION	DATE: 03-02-2020
PROJECT	TELANGANA STATE POWER GENERATION CORPORATION LTD, 5X800 MW YADADRI TPS, NALGONDA	
CLIENT:	BHARAT HEAVY ELECTRICALS LIMITED :PSSR CHENNAI	DRN: VIJAY
CONTRACTORS NAME	M/S. GAJA ENGINEERING PVT LTD	CHKD:
TITLE:	T.G. FOUNDATION FOR STAGING & SHUTTERING ARRANGEMENT OF DECK SLAB	APPD:
DETAILS:	STAGING AND SHUTTERING ARRANGEMENT FOR BEAMS AT EL:(+)13.50m LVL SECTION 3-3 TO SECTION 8-8	SCALE: AS SHOWN
JOB NO.	DRG. NO: TSGENCO/BHEL/GAJA/016	REV. NO. 1

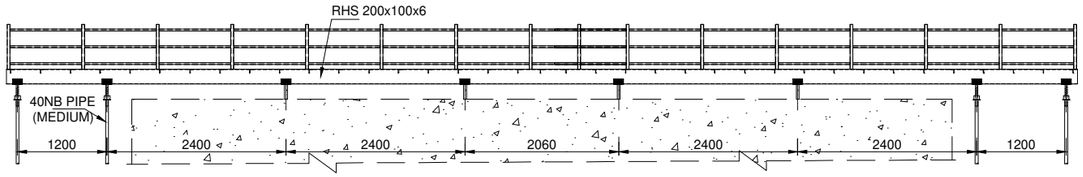

SECTION E - E (WALK-WAY TYPE-1)
(SCALE 1:50)

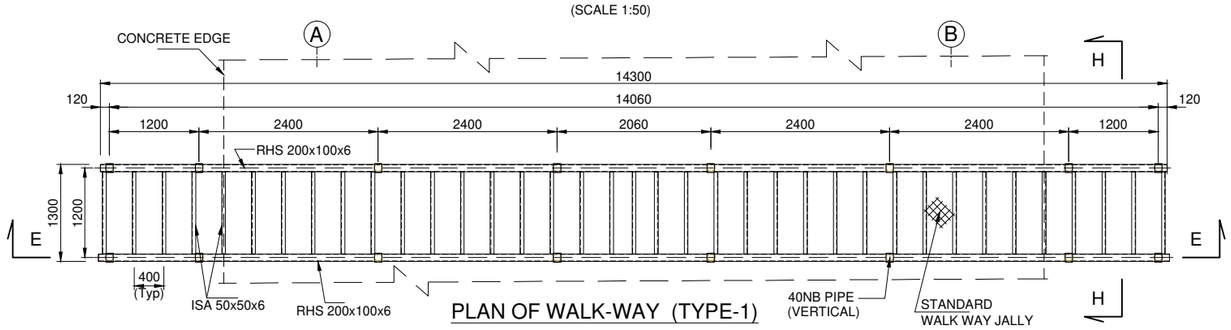

PLAN OF WALK-WAY (TYPE-1)
(HANDRAILING NOT SHOWN)
(SCALE 1:50)

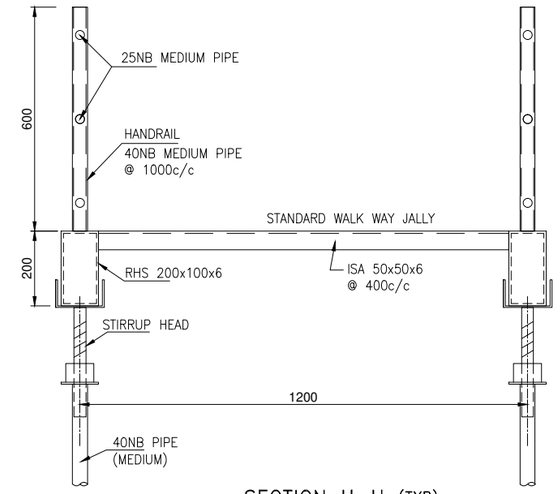

SECTION H-H (TYP)
(WALK-WAY)
(SCALE 1:10)

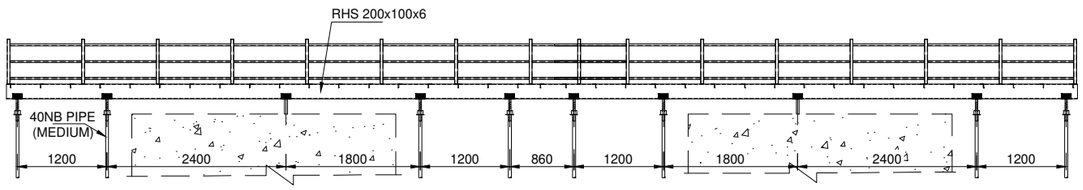

SECTION F - F (WALK-WAY TYPE-2)
(SCALE 1:50)

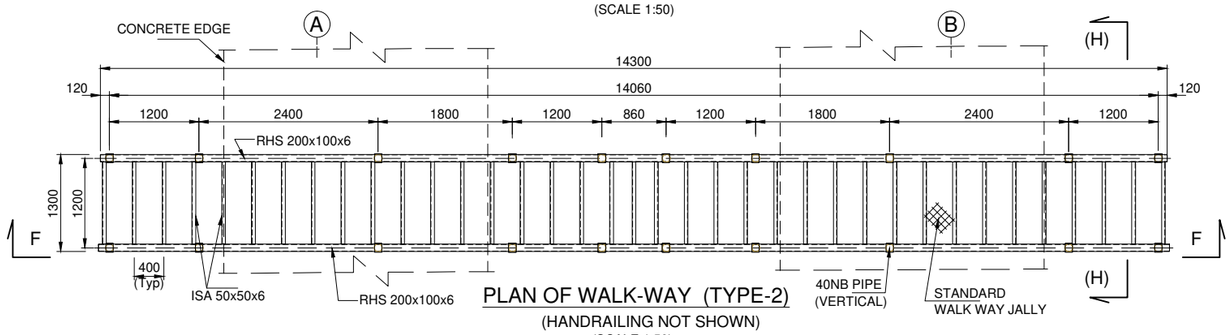

PLAN OF WALK-WAY (TYPE-2)
(HANDRAILING NOT SHOWN)
(SCALE 1:50)

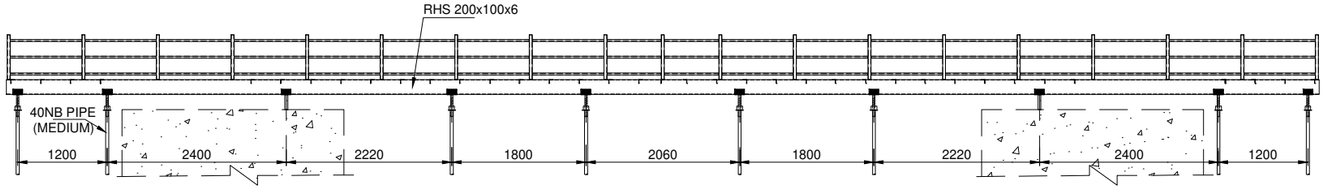

SECTION G - G (WALK-WAY TYPE-3)
(SCALE 1:50)

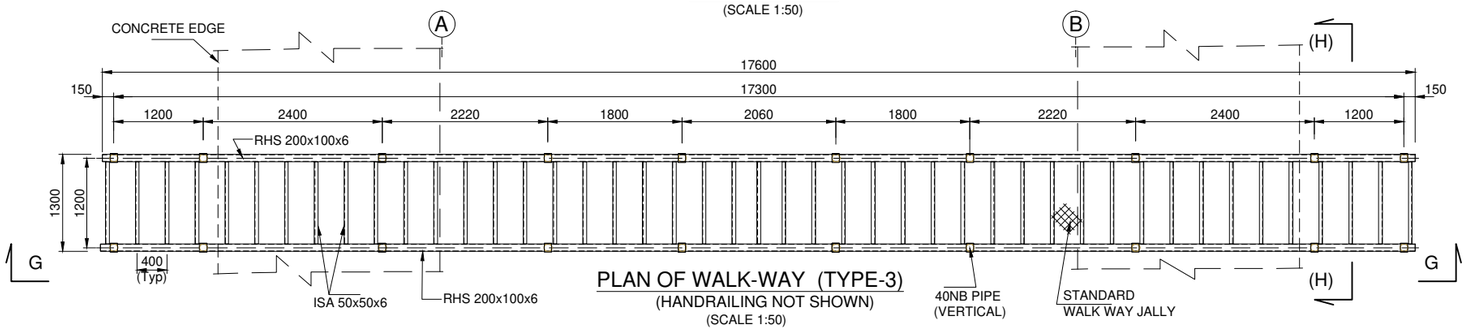

PLAN OF WALK-WAY (TYPE-3)
(HANDRAILING NOT SHOWN)
(SCALE 1:50)

NOTES:-

1. ALL DIMENSIONS ARE IN mm AND LEVELS ARE IN METRES UNLESS OTHERWISE SPECIFIED.
2. FOR GENERAL NOTES REFER DRG No: TSGENCO/BHEL/GAJA/011
3. READ THIS DRG IN CONJUNCTION WITH DRG Nos: TSGENCO/BHEL/GAJA/011 TO 019.

WALK WAY TO BE USED FOR PERSONAL MOVEMENT ONLY, NOT FOR MATERIAL HANDLING OR STORAGE.

TATA CONSULTING ENGINEERS LIMITED
VENDOR DOCUMENT REVIEW STATUS

- ☑ A Drawing/Document approved as submitted. Proceed with fabrication/construction.
- ☐ B Drawing/Document approved subjected to comments noted. Proceed with fabrication/construction considering our commnets.
- ☐ C Our comments are noted on this marked up print.
- ☐ D Our commnets are noted in memo attached to the forwarding transmittal letter No. .....Dated 15-02-2021
- ☐ E Correct original of this drawing/document to reflect our comments and resubmit for approval.
- ☐ F Correct original of this drawing/document to reflect our comments and resubmit for records.
- ☐ G Drawings/Documents of this category are for information only and not for approval. Information furnished on the drawing/document is noted.
- ☐ H Drawing/Document reviewed against our previous comments and other revisions highlighted and identified by the vendor.
- ☐ I Drawing/Document returned without review.
- ☐ J Print not enclosed.

Approval conveyed herein neither relieves the Vendor/Contractor of his contractual obligations and his responsibilities for correctness of dimensions, materials of construction, weights, quantities, design details, assembly fits, performance requirements and conformity of the supplies with the Indian Statutory Laws as may be applicable, nor does it limit the purchaser's rights under the contract.

Reviewed by NC NC Date 15-02-2021

BHARAT HEAVY ELECTRICALS LTD
POWER SECTOR
PROJECT ENGINEERING MANAGEMENT

This approval status shall be interpreted as laid down in the contract and it shall not relieve the contractor from his contractual obligations.

APPROVAL CATEGORY AWARDED:

CAT I = Approved
CAT II = Approved with comments as Noted
CAT III = Not Approved: To Be Resubmitted
CAT IV = Reference Drawing

DEPARTMENT	CIVIL
NAME	SIGNATURE
Sachin Jain	Sd/-

REV. NO.	DATE	DESCRIPTION	CHKD	APPD
1	09-03-2020	ISSUED FOR APPROVAL		
0	03-02-2020	ISSUED FOR APPROVAL		

OWNER	TELANGANA POWER GENERATION CORPORATION	DATE: 03-02-2020
PROJECT	TELANGANA STATE POWER GENERATION CORPORATION LTD, 5X800 MW YADADRI TPS, NALGONDA	
CLIENT:	BHARAT HEAVY ELECTRICALS LIMITED :PSSR CHENNAI	DRN: VIJAY
CONTRACTORS NAME	M/S. GAJA ENGINEERING PVT LTD	CHKD:
TITLE:	T.G. FOUNDATION FOR STAGING & SHUTTERING ARRANGEMENT OF DECK SLAB	APPD:
DETAILS:	WALK - WAY PLAN & SECTIONS	SCALE: AS SHOWN
JOB NO.	DRG. NO: TSGENCO/BHEL/GAJA/017	REV. NO. 1

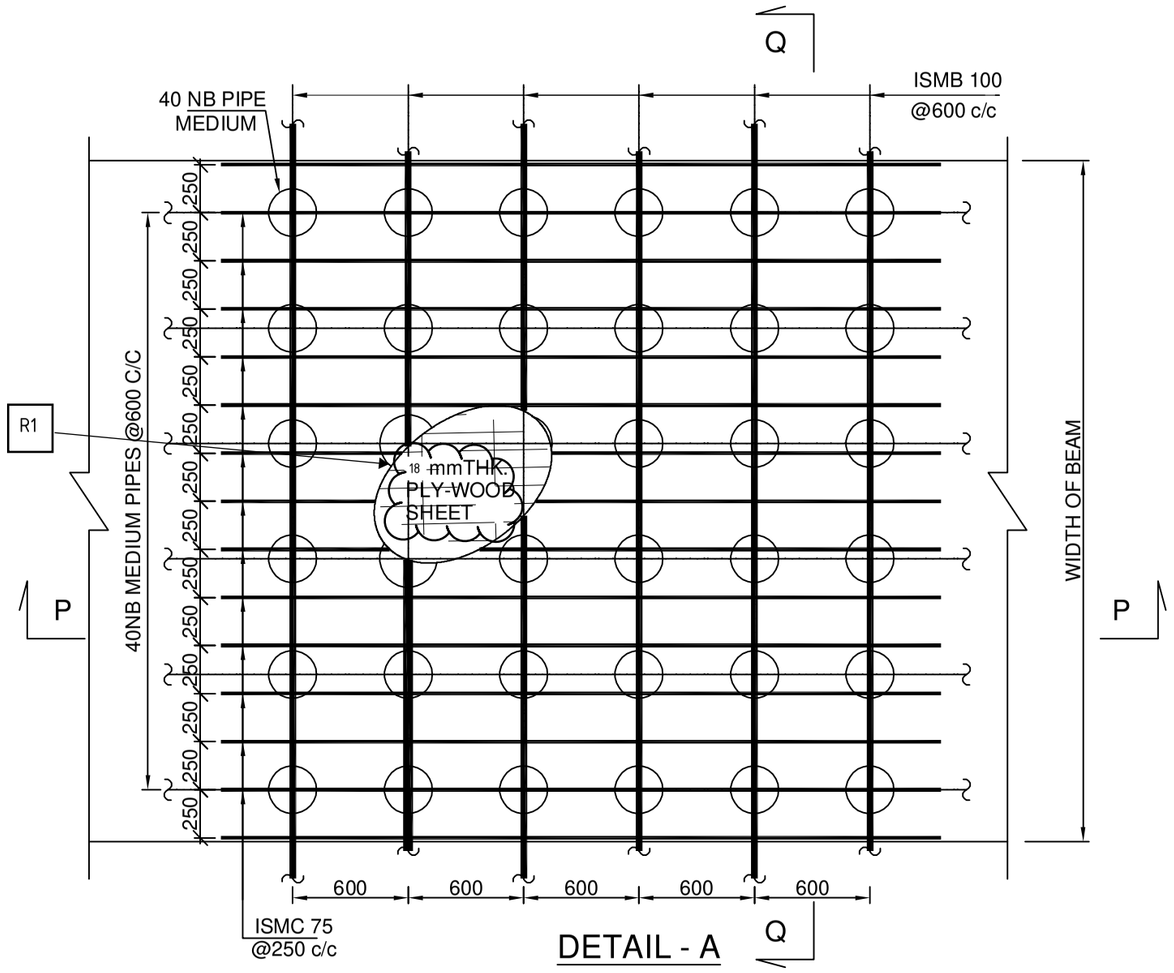

DETAIL - A

PLAN OF BEAM SOFFIT SHUTTERING

(SCALE 1:30)

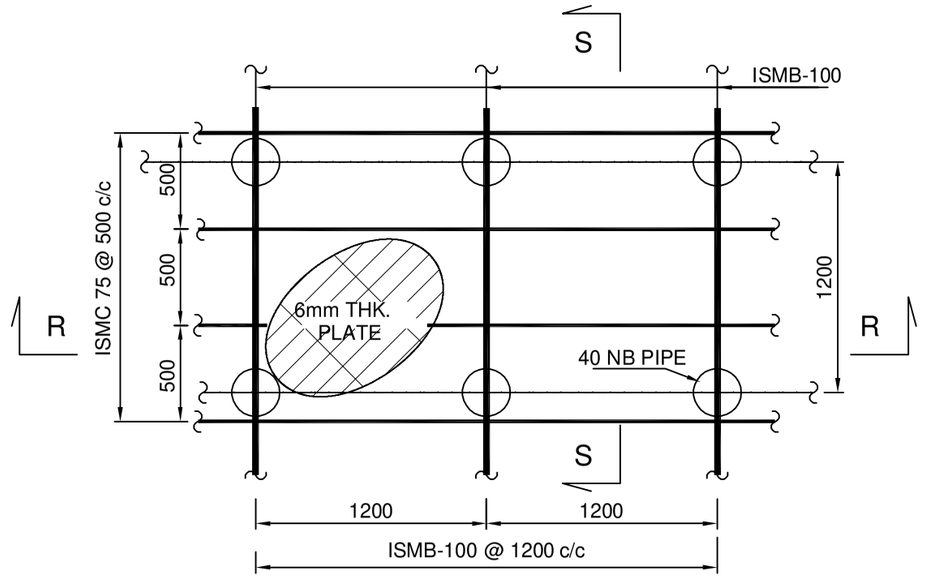

DETAIL - B

(PLATFORM AREA)

(SCALE 1:30)

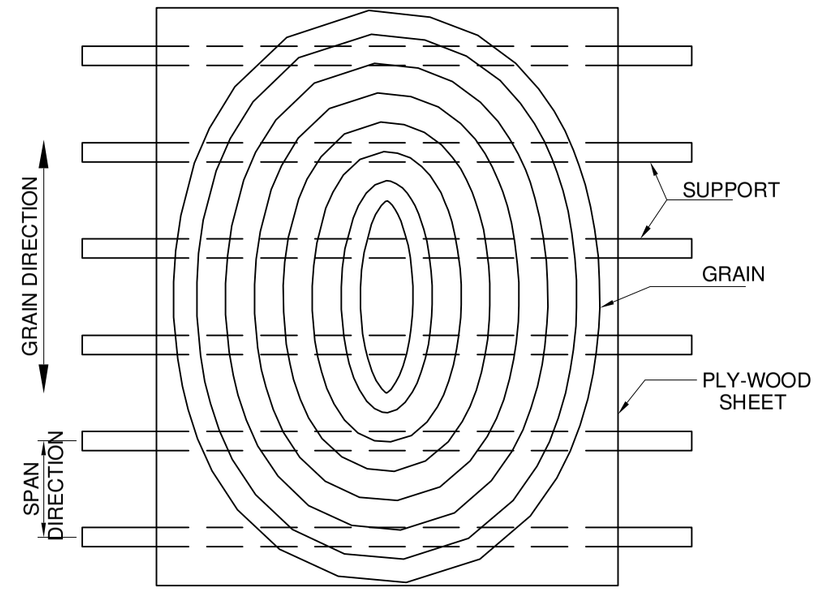

TYP ARRGT. OF PLY-WOOD SHEET

(SOFFIT SHUTTER)

(SCALE 1:15)

1) BHEL may please note that all applicable input drawings are currently in the process of review/ yet to be submitted /not submitted with unit currently developing this drawing and with other units of BHEL. In view of all this for any interference of utilities (cables, piping, ducts, Equipment placing, etc.,). Orientation & coordinate for THIS area shall be checked by BHEL currently developing this drawing and with other units of BHEL. If there is any interference at later date which may lead to major revision in drawings & design; the same shall be ensured and incorporated in relevant drawings at BHEL's end. M/s BHEL shall stand guarantee for the final civil drawings based on input data considered. Any short comings/deviations from these resulting in cost and time over runs shall be borne solely by M/s BHEL. The Owner TSGENCO and consultant M/s TCE would not be party to such eventuality. Any eventual changes in sizing/civil works shall be taken up by M/s BHEL without affecting the project schedule. The risk will be solely on M/s BHEL.

2) Any changes or modifications carried out during engineering affecting drawing shall be reflected and incorporated by BHEL without any time and cost implications. Any update that is required in this drawing shall be reflected in applicable drawings in the as built drawings.

NOTES:-

1. ALL DIMENSIONS ARE IN mm AND LEVELS ARE IN METRES UNLESS OTHERWISE SPECIFIED.
2. READ THIS DRG IN CONJUNCTION WITH DRG Nos:- TSGENCO/BHEL/GAJA/011 TO 019.

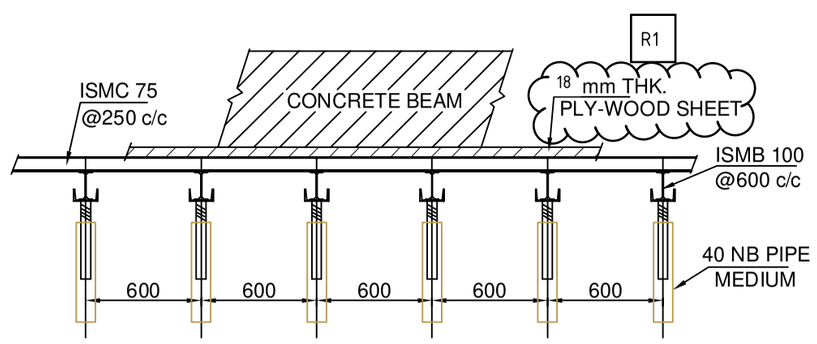

SECTION P-P

(BEAM SOFFIT SHUTTERING)

(SCALE 1:30)

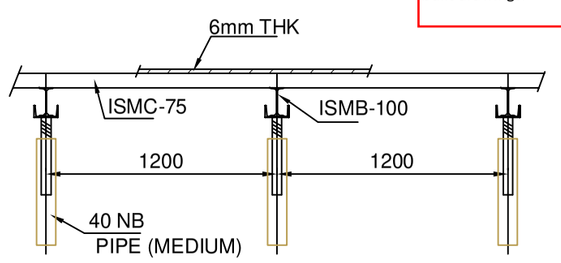

SECTION R-R

(PLATFORM AREA)

(SCALE 1:30)

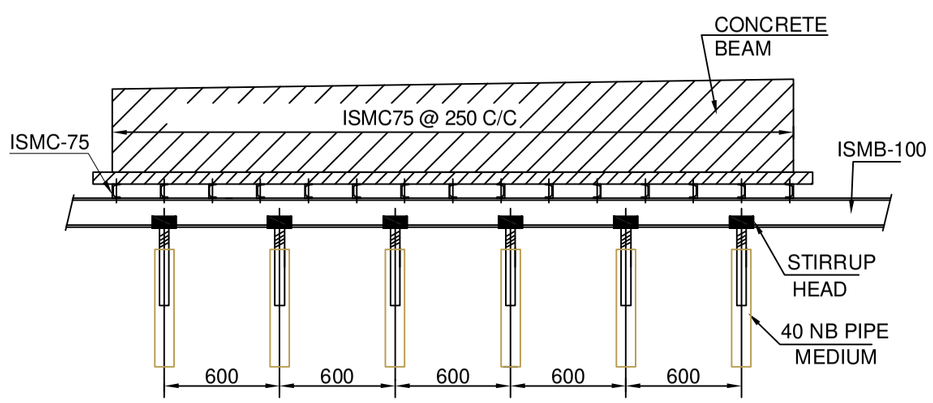

SECTION Q-Q

(BEAM SOFFIT SHUTTERING)

(SCALE 1:30)

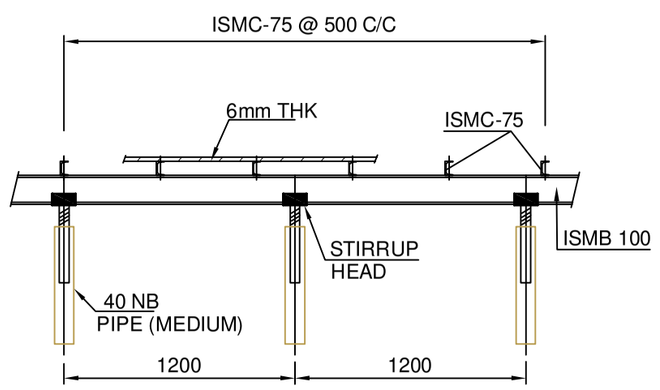

SECTION S-S

(PLATFORM AREA)

(SCALE 1:30)

TATA CONSULTING ENGINEERS LIMITED
VENDOR DOCUMENT REVIEW STATUS

- ☑ A Drawing/Document approved as submitted. Proceed with fabrication/construction.
- ☐ B Drawing/Document approved subjected to comments noted. Proceed with fabrication/ construction considering our commnets.
- ☐ C Our comments are noted on this marked up print.
- ☐ D Our commnets are noted in memo attached to the forwarding transmittal letter No. .....Dated 15-02-2021.....
- ☐ E Correct original of this drawing/document to reflect our comments and resubmit for approval.
- ☐ F Correct original of this drawing/document to reflect our comments and resubmit for records.
- ☐ G Drawings/Documents of this category are for information only and not for approval. Information furnished on the drawing/document is noted.
- ☐ H Drawing/Document reviewed against our previous comments and other revisions highlighted and identified by the vendor.
- ☐ I Drawing/Document returned without review.
- ☐ J Print not enclosed.

Approval conveyed herein neither relieves the Vendor/Contractor of his contractual obligations and his responsibilities for correctness of dimensions, materials of construction, weights, quantities, design details, assembly fits, performance requirements and conformity of the supplies with the Indian Statutory Laws as may be applicable, nor does it limit the purchaser's rights under the contract.

Reviewed by...NC..... NC ....Date 15-02-2021.....

BHARAT HEAVY ELECTRICALS LTD
POWER SECTOR
PROJECT ENGINEERING MANAGEMENT

This approval status shall be interpreted as laid down in the contract and it shall not relieve the contractor from his contractual obligations.

APPROVAL CATEGORY AWARDED.

CAT I = Approved
CAT II = Approved with comments as Noted
CAT III = Not Approved / To Be Resubmitted
CAT IV = Reference Drawing

DEPARTMENT	CIVIL
NAME	SIGNATURE
Sachin Jain	-Sd-

REV. NO.	DATE	DESCRIPTION	CHKD	APPD
1	19-10-20	PLYWOOD THICKNESS MODIFIED TO 18MM		
0	03-02-2020	ISSUED FOR APPROVAL		

OWNER	TELANGANA POWER GENERATION CORPORATION	DATE: 03-02-2020
PROJECT	TELANGANA STATE POWER GENERATION CORPORATION LTD, 5X800 MW **YADADRI TPS, NALGONDA**	
CLIENT:	BHARAT HEAVY ELECTRICALS LIMITED :PSSR CHENNAI	DRN: VIJAY
CONTRACTORS NAME	M/S. GAJA ENGINEERING PVT LTD	CHKD:
TITLE:	T.G. FOUNDATION FOR STAGING & SHUTTERING ARRANGEMENT OF DECK SLAB	APPD:
DETAILS:	STAGING AND SHUTTERING ARRANGEMENT FOR BEAMS AT EL:(+)13.50m LVL ENLGD DTLS & CROSS SECTION	SCALE: AS SHOWN
JOB NO.	DRG. NO: TSGENCO/BHEL/GAJA/018	REV. NO. 1

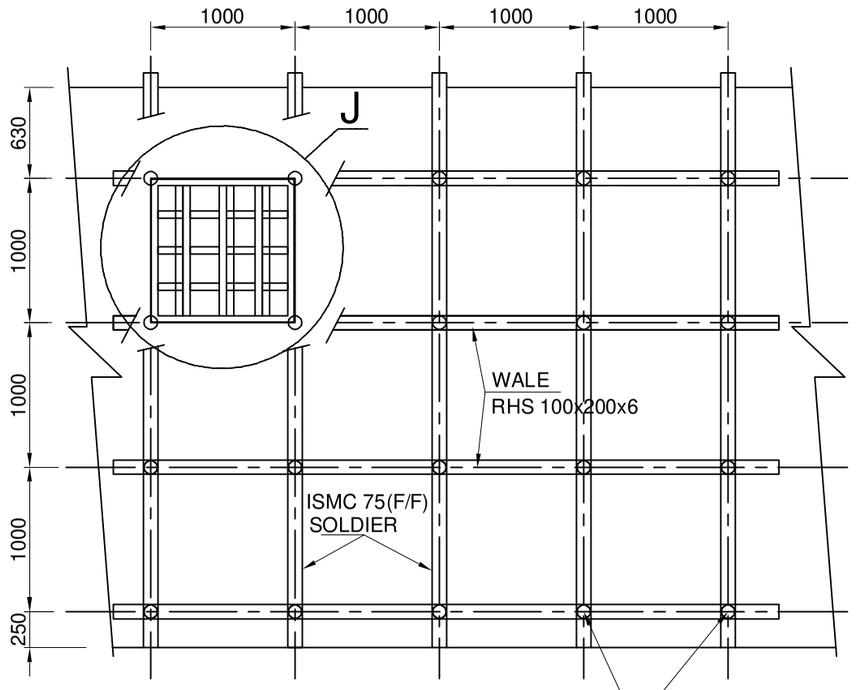

VIEW X-X
(SIDE SHUTTERING)

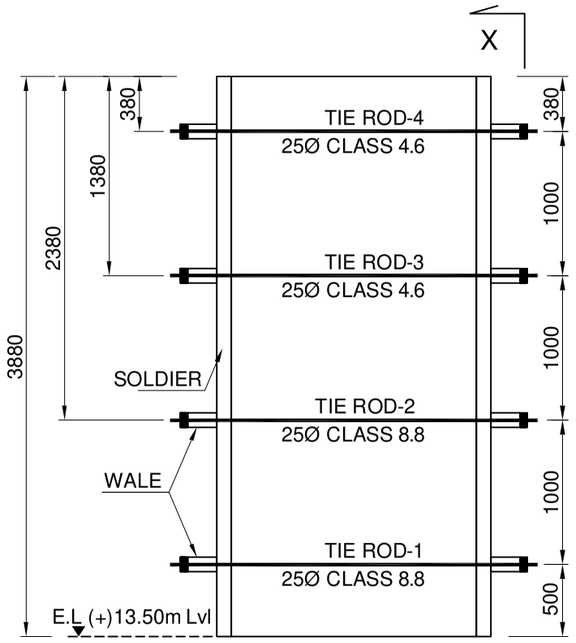

SECTION X
(LOCATION OF TIE RODS)
(SCALE 1:40)

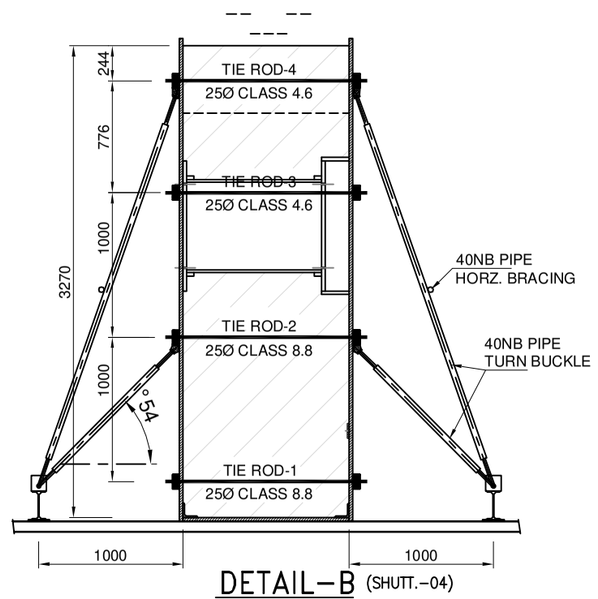

DETAIL-B (SHUTT.-04)
(TYPICAL DETAIL SHOWING TURN BUCKLE ARRANGEMENT)
(SCALE 1:40)

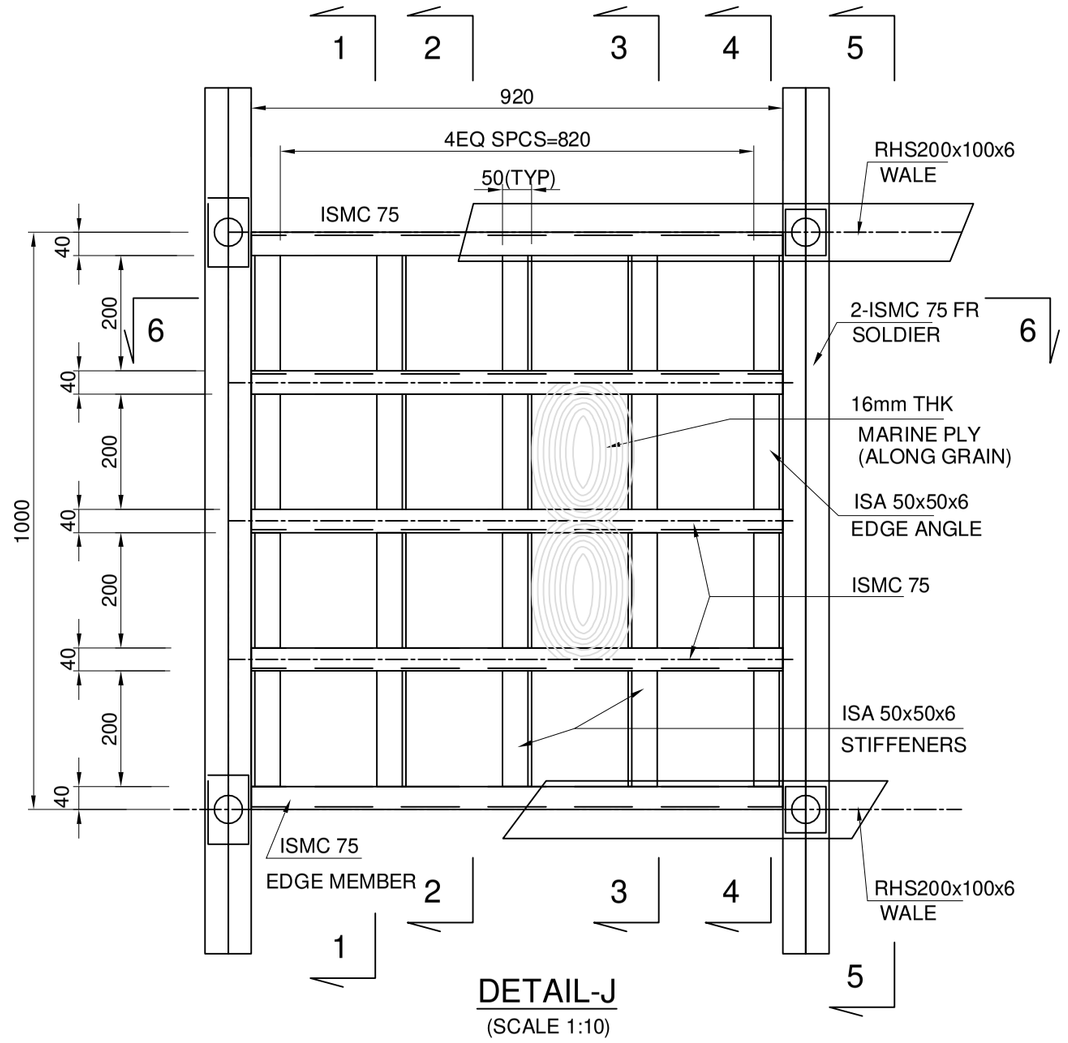

DETAIL-J
(SCALE 1:10)

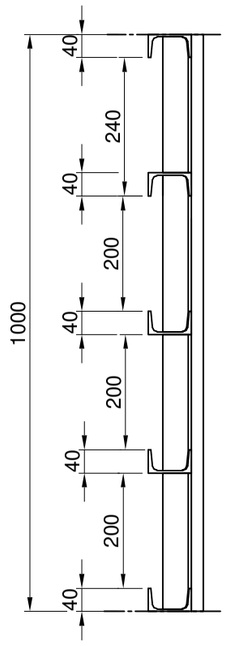

SEC 1-1
(SCALE 1:10)

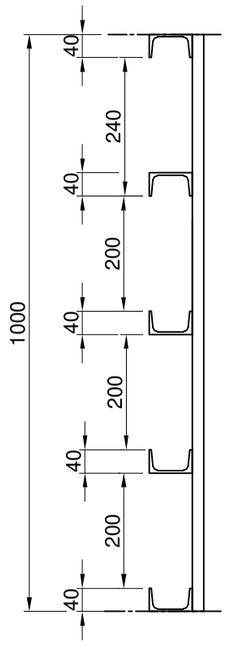

SEC 2-2
(SCALE 1:10)

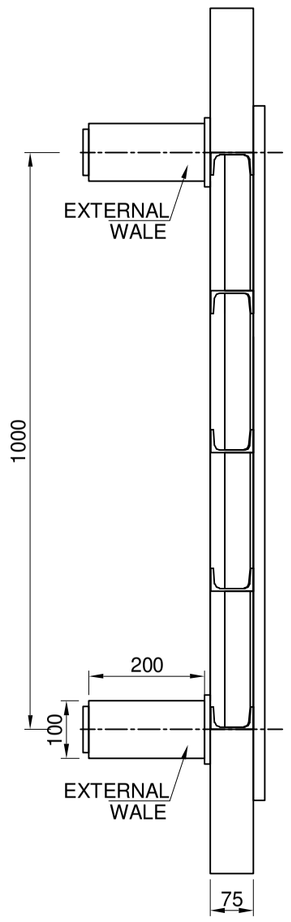

SEC 3-3
(SCALE 1:10)

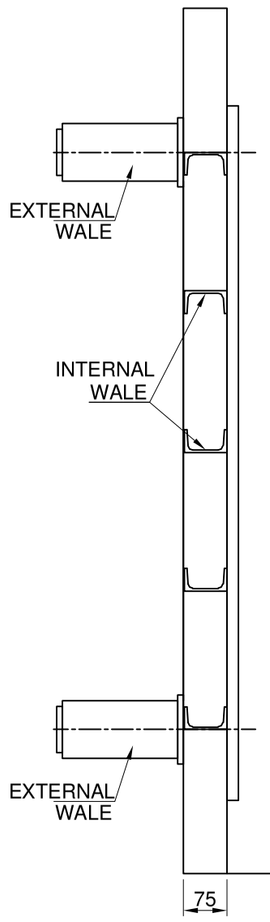

SEC 4-4
(SCALE 1:10)

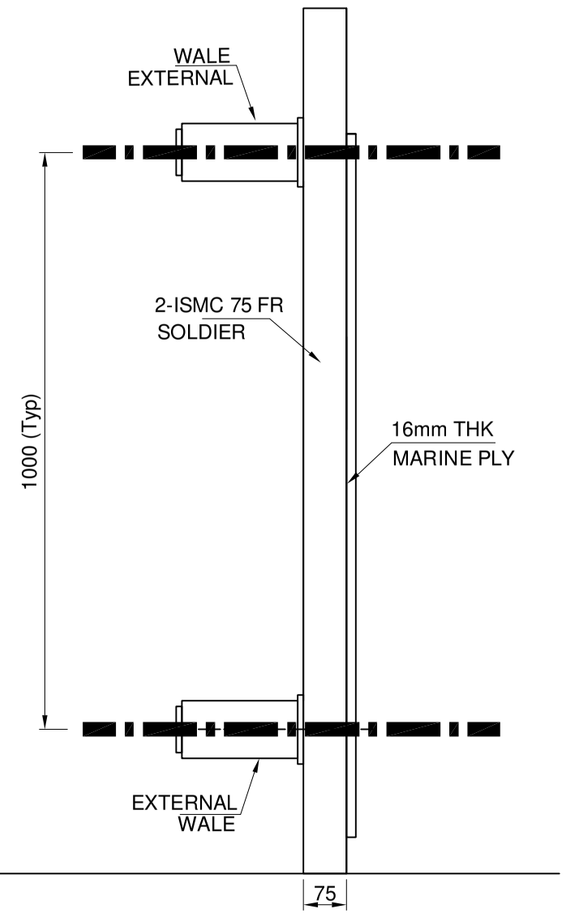

SEC 5-5
(SCALE 1:10)

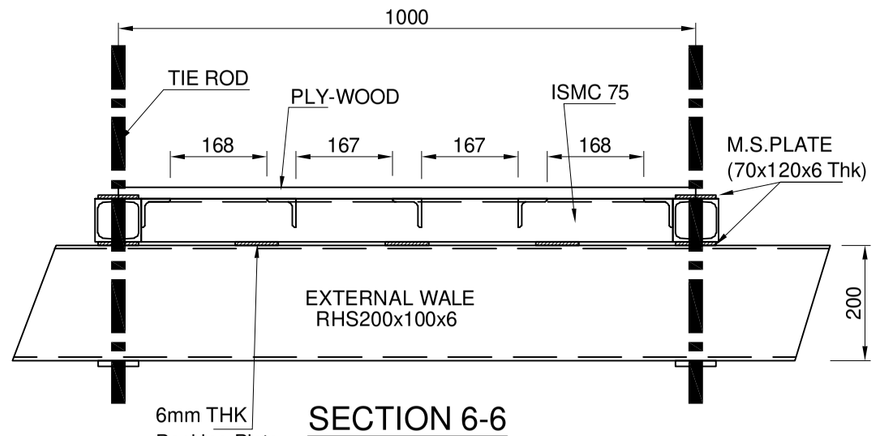

SECTION 6-6
(SCALE 1:10)

TATA CONSULTING ENGINEERS LIMITED
VENDOR DOCUMENT REVIEW STATUS

- ☑ A Drawing/Document approved as submitted. Proceed with fabrication/construction.
- ☐ B Drawing/Document approved subjected to comments noted. Proceed with fabrication/ construction considering our commnets.
- ☐ C Our comments are noted on this marked up print.
- ☐ D Our commnets are noted in memo attached to the forwarding transmittal letter No. ..... Dated 15-02-2021
- ☐ E Correct original of this drawing/document to reflect our comments and resubmit for approval.
- ☐ F Correct original of this drawing/document to reflect our comments and resubmit for records.
- ☐ G Drawings/Documents of this category are for information only and not for approval. Information furnished on the drawing/document is noted.
- ☐ H Drawing/Document reviewed against our previous comments and other revisions highlighted and identified by the vendor.
- ☐ I Drawing/Document returned without review.
- ☐ J Print not enclosed.

Approval conveyed herein neither relieves the Vendor/Contractor of his contractual obligations and his responsibilities for correctness of dimensions, materials of construction, weights, quantities, design details, assembly fits, performance requirements and conformity of the supplies with the Indian Statutory Laws as may be applicable, nor does it limit the purchaser's rights under the contract.

Reviewed by...NC..... NC ....Date 15-02-2021.....

NOTES:–

1. ALL DIMENSIONS ARE IN mm AND LEVELS ARE IN METRES UNLESS OTHERWISE SPECIFIED.
2. READ THIS DRG IN CONJUNCTION WITH DRG Nos:- TSGENCO/BHEL/GAJA/011 TO 019.

1) BHEL may please note that all applicable input drawings are currently in the process of review/ yet to be submitted /not submitted with unit currently developing this drawing and with other units of BHEL. In view of all this for any interference of utilities (cables, piping, ducts, Equipment placing, etc.,). Orientation & coordinate for THIS area shall be checked by BHEL currently developing this drawing and with other units of BHEL. If there is any interference at later date which may lead to major revision in drawings & design; the same shall be ensured and incorporated in relevant drawings at BHEL's end. M/s BHEL shall stand guarantee for the final civil drawings based on input data considered. Any short comings/deviations from these resulting in cost and time over runs shall be borne solely by M/s BHEL. The Owner TSGENCO and consultant M/s TCE would not be party to such eventuality. Any eventual changes in sizing/civil works shall be taken up by M/s BHEL without affecting the project schedule. The risk will be solely on M/s BHEL.

2) Any changes or modifications carried out during engineering affecting drawing shall be reflected and incorporated by BHEL without any time and cost implications. Any update that is required in this drawing shall be reflected in applicable drawings in the as built drawings.

BHARAT HEAVY ELECTRICALS LTD
POWER SECTOR
PROJECT ENGINEERING MANAGEMENT

This approval status shall be interpreted as laid down in the contract and it shall not relieve the contractor from his contractual obligations.

APPROVAL CATEGORY AWARDED.

CAT. I = Approved
CAT II = Approved with comments as Noted
CAT III = Not Approved / To Be Resubmitted
CAT IV = Reference Drawing

DEPARTMENT	CIVIL
NAME	SIGNATURE
Sachin Jain	-Sd-

REV. NO.	DATE	DESCRIPTION	CHKD	APPD
0	03-02-2020	ISSUED FOR APPROVAL		

OWNER	TELANGANA POWER GENERATION CORPORATION	DATE: 03-02-2020
PROJECT	TELANGANA STATE POWER GENERATION CORPORATION LTD, 5X800 MW **YADADRI TPS, NALGONDA**	
CLIENT:	BHARAT HEAVY ELECTRICALS LIMITED :PSSR CHENNAI	DRN: VIJAY
CONTRACTORS NAME	M/S. GAJA ENGINEERING PVT LTD	CHKD:
TITLE:	T.G. FOUNDATION FOR STAGING & SHUTTERING ARRANGEMENT OF DECK SLAB	APPD:
DETAILS:	STAGING AND SHUTTERING ARRANGEMENT FOR BEAMS AT EL:(+)13.50m LVL ENLGD DTLS & CROSS SECTION	SCALE: AS SHOWN
JOB NO.	DRG. NO: TSGENCO/BHEL/GAJA/019	REV. NO. 0

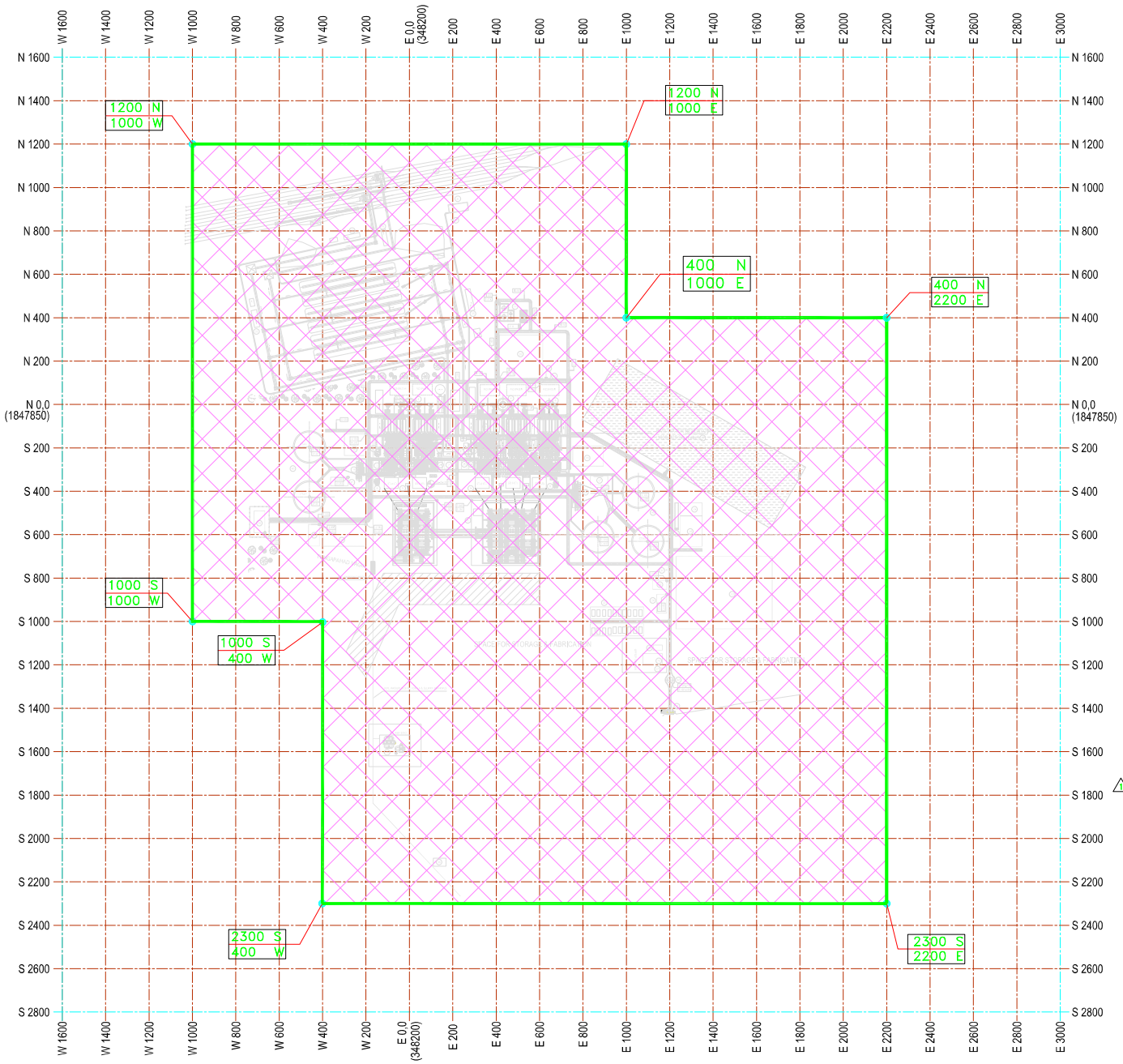

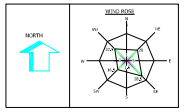

S.No.	DESCRIPTION	CONFIG.
1	POWER HOUSE BLDG	-
2	BOILER	-
3	ESP	-
4	CHIMNEY	2+2+1
5	TRANSFORMER YARD	-
6	SWITCHYARD (CONT. ROOM)	-
7	SERVICE BLDG.	COMMON
8	DG BUILDING	2 Nos
9	COOLING TOWER(NDCT)	-
10	DM PLANT & CPU REGEN.	COMMON
11	FUEL OIL UNLOADING	COMMON
12	FUEL OIL COMPLEX	COMMON
13	PRE-TREATMENT PLANT	COMMON
14	CLARIFIED WATER TANK	COMMON
15	FIRE WATER TANK	COMMON
16	CLARIFIED CUM FIRE WATER P/H	COMMON
17	SIDE STREAM FILTERATION	2 + 3
18	H2 GEN. PLANT & CYLINDERS SHED	COMMON
19	CW P/H & FOREWAY	2 + 3
20	CHLORINATION & CW TREAT. PLANT	2 + 3
21	EFFLUENT TREAT. PLANT	COMMON
22	SEWAGE TREAT. PLANT	COMMON
23	ADMIN. BUILDING	COMMON
24	FIRE STATION BUILDING	COMMON
25	CANTEEN	2NOs
26	FLY ASH SILO AREA	COMMON
27	CHEMICAL LAB	COMMON
28	WORKSHOP	COMMON
29	COMPRESSOR HOUSE	2 + 3
30	COAL STOCK AREA	COMMON
31	MARSHLING YARD (BY TSGENCO)	COMMON
32	GATE COMPLEX CUM SECURITY BLDG.	COMMON
33	PERMANENT STORES (15MX30M)	18+1
34	AUXILIARY BOILER	-
35	CHP MCC	4 NOs
36	CHEMICAL LAB (PCRI)	COMMON
37	AAQMS (4MX4M SHED)	4 NOs
38	CST + PUMP HOUSE	2 + 3
39	AWRP/H & MCC	1
40	NDCT	5
41	RAW WATER RESERVOIR	COMMON
42	PYLON/FOUNDATION STONE	-
43	ASH DYKE AREA	-

NOTES:-

1. ALL DIMENSIONS ARE IN METER.
2. TOPOGRAPHICAL SURVEY SHALL BE CARRIED OUT AS PER SPECIFICATION NO.PE-TS-K52-601-C001.
3. LOCATION OF BENCH MARK PILLAR/GRID PILLAR SHALL BE SUITABLY DECIDED AT SITE IN CONSULTATION WITH CUSTOMER/ENGINEER-IN-CHARGE.

REFERENCE DRAWING:-

DRAWING NO. PE-DG-417-100-M001, REV. 02, TITLED "PLOT PLAN".

LEGEND:-

AREA FOR TOPOGRAPHICAL SURVEY

TELANGANA STATE POWER GENERATION CORPORATION LIMITED
HYDERABAD, TELANGANA STATE

TSGENCO-YADRADRI TPS
THERMAL POWER PLANT 5X800 MW
AT VEERLAPALEM VILLAGE,DAMERACHERLA MANDAL
NALGONDA DISTRICT, TELANGANA STATE

BHARAT HEAVY ELECTRICALS LTD
POWER SECTOR
PROJECT ENGINEERING MANAGEMENT
NOIDA

JOB NO. 417
STATUS CONTRACT
DISTRIBUTION

REV.	DATE	ALTD	CHD	APPD
01	13.11.15	PK -sd-	TMSR	CPK-sd-

DRAWING REVISED DUE CHANGE IN PLOT PLAN. REVISION MARKED △1 THUS.

COPY RIGHT AND CONFIDENTIAL
The information on this document is the property of BHARAT HEAVY ELECTRICALS LIMITED it must not be used directly or indirectly in any way detrimental to the interest of the company.

		NAME	DATE
DRAWN	PKR	-sd-	13.07.2015
CHKD	TC	-sd-	13.07.2015
CHKD	TMSR	-sd-	13.07.2015
APPD	CPK	-sd-	13.07.2015

TITLE: TOPOGRAPHICAL SURVEY LAYOUT

SCALE: 1:2000
DRAWING NO. PE-DG-417-601-C001
SHEET 1 OF 1
REV. 01

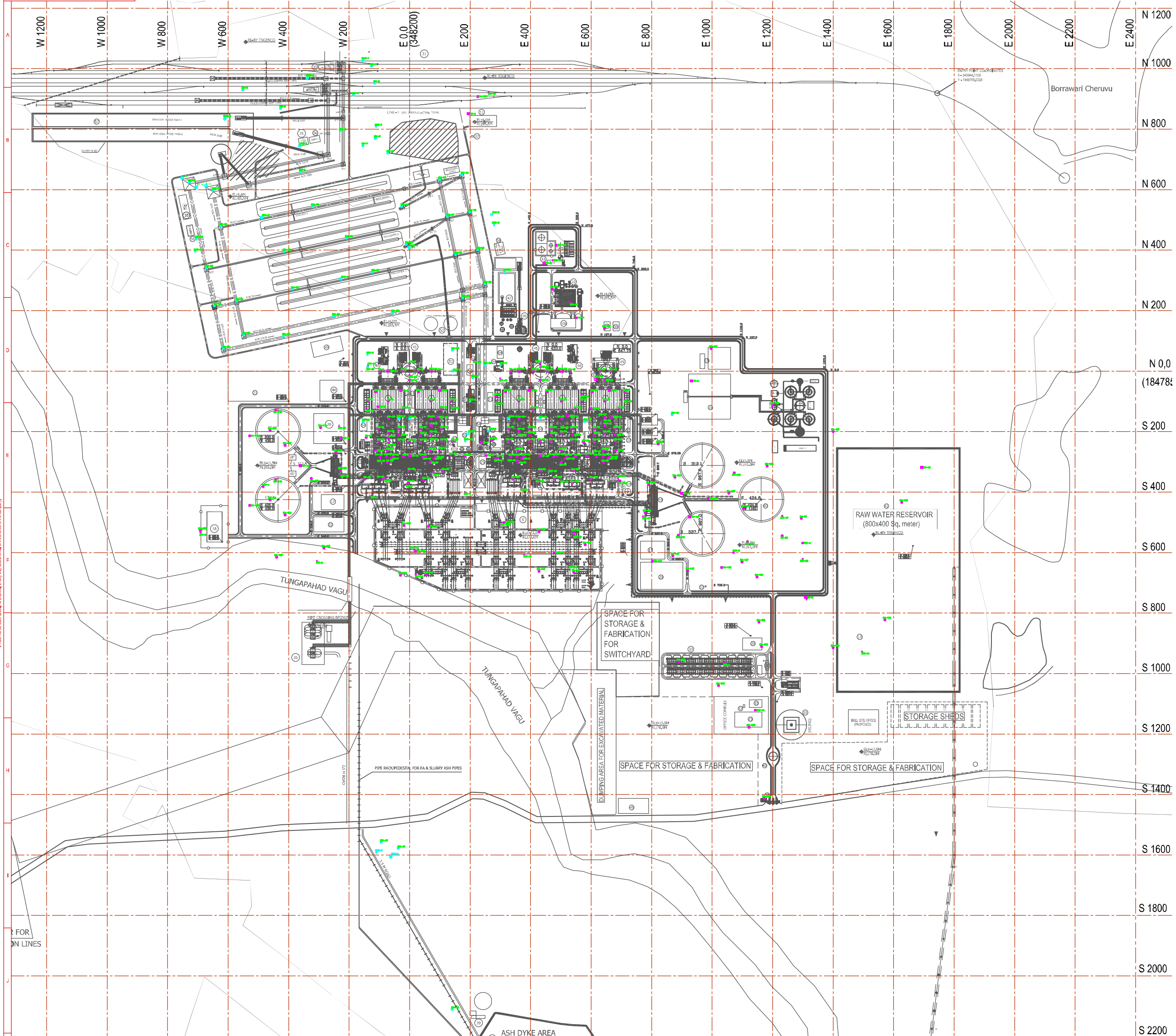

S.No.	DESCRIPTION	CONFIG.
1	POWER HOUSE BLDG	-
2	BOILER	-
3	ESP	-
4	CHIMNEY	2+2+1
5	TRANSFORMER YARD	-
6	SWITCHYARD (CONT. ROOM)	-
7	SERVICE BLDG.	COMMON
8	DG BUILDING	2 Nos
9	COOLING TOWER(NDCT)	-
10	DM PLANT & CPU REGEN.	COMMON
11	FUEL OIL UNLOADING	COMMON
12	FUEL OIL COMPLEX	COMMON
13	PRE-TREATMENT PLANT	COMMON
14	CLARIFIED WATER TANK	COMMON
15	FIRE WATER TANK	COMMON
16	CLARIFIED CUM FIRE WATER P/H	COMMON
17	SIDE STREAM FILTERATION	2+3
18	H2 GEN. PLANT & CYLINDERS SHED	COMMON
19	CW P/H & FOREWAY	2+3
20	CHLORINATION & CW TREAT. PLANT	2+3
21	EFFLUENT TREAT. PLANT	COMMON
22	SEWAGE TREAT. PLANT	COMMON
23	ADMIN. BUILDING	COMMON
24	FIRE STATION BUILDING	COMMON
25	CANTEEN	2NOs
26	FLY ASH SILO AREA	COMMON
27	CHEMICAL LAB	COMMON
28	WORKSHOP	COMMON
29	COMPRESSOR HOUSE	2+3
30	COAL STOCK AREA	COMMON
31	MARSHLING YARD (BY TSGENCO)	COMMON
32	GATE COMPLEX CUM SECURITY BLDG.	COMMON
33	PERMANENT STORES (15MX30M)	18+1
34	AUXILIARY BOILER	-
35	CHP MCC	4 NOs
36	CHEMICAL LAB (PCRI)	COMMON
37	AAQMS (4MX4M SHED)	4 NOs
38	CST + PUMP HOUSE	2+3
39	AWRP/H & MCC	1
40	NDCT	5
41	RAW WATER RESERVOIR	COMMON
42	PYLON/FOUNDATION STONE	-
43	ASH DYKE AREA	-

BORE HOLE (BH)

MARKING	CO-ORDINATES		DEPTH (M) (REFER NOTE-2)
BH-1	0.0 N/S	100 W	10
BH-2	0.0 N/S	25 W	20
BH-3	0.0 N/S	29 E	15
BH-4	0.0 N/S	99 E	10
BH-5	69 S	112 W	10
BH-6	69 S	29 E	10
BH-7	99 S	137 W	10
BH-8	99 S	71 W	20
BH-9	99 S	70 E	20
BH-10	99 S	136 E	10
BH-11	126 S	22 W	10
BH-12	126 S	105 E	10
BH-13	157 S	69 W	20
BH-14	157 S	71 E	20
BH-15	191 S	105 W	10
BH-16	191 S	36 W	10
BH-17	191 S	36 E	10
BH-18	191 S	105 E	10
BH-19	205 S	70 W	15
BH-20	205 S	70 E	15
BH-21	220 S	144 W	10
BH-22	232 S	104 W	10
BH-23	232 S	36 W	15
BH-24	233 S	0.00 E/W	10
BH-25	232 S	36 E	10
BH-26	232 S	105 E	15
BH-27	232 S	141 E	10
BH-28	263 S	74 W	15
BH-29	263 S	68 E	15
BH-30	283 S	98 W	15
BH-31	283 S	55 W	20
BH-32	283 S	43 E	15
BH-33	283 S	87 E	20
BH-34	279 S	135 E	10
BH-35	283 S	182 E	15
BH-36	302 S	74 W	15
BH-37	302 S	68 E	15
BH-38	329 S	3 W	10
BH-39	330 S	110 E	10
BH-40	357 S	149 W	10
BH-41	356 S	88 W	10
BH-42	360 S	45 E	15
BH-43	369 S	5 W	10
BH-44	0.0 N/S	334 E	10
BH-45	0.0 N/S	408 E	10
BH-46	0.0 N/S	454 E	20
BH-47	0.0 N/S	530 E	10
BH-48	0.0 N/S	627 E	15
BH-49	0.0 N/S	666 E	20
BH-50	487 S	1295 E	10
BH-51	69 S	317 E	15
BH-52	69 S	454 E	10
BH-53	69 S	604 E	15
BH-54	69 S	711 E	10
BH-55	83 S	284 E	10
BH-56	545 S	1231 E	15
BH-57	99 S	361 E	20
BH-58	99 S	501 E	20
BH-59	99 S	569 E	10
BH-60	99 S	644 E	20
BH-61	126 S	406 E	15
BH-62	126 S	548 E	15
BH-63	126 S	691 E	15
BH-64	157 S	362 E	15
BH-65	157 S	502 E	15
BH-66	157 S	645 E	20
BH-67	191 S	327 E	15
BH-68	196 S	361 E	20
BH-69	191 S	395 E	15
BH-70	191 S	467 E	15
BH-71	191 S	536 E	15
BH-72	191 S	610 E	15
BH-73	191 S	679 E	15
BH-74	205 S	501 E	20
BH-75	205 S	644 E	10
BH-76	229 S	273 E	10
BH-77	232 S	327 E	15
BH-78	232 S	396 E	15
BH-79	232 S	431 E	10
BH-80	232 S	468 E	15
BH-81	232 S	536 E	15
BH-82	235 S	574 E	10
BH-83	232 S	611 E	10
BH-84	232 S	679 E	15
BH-85	241 S	822 E	10
BH-86	263 S	358 E	15
BH-87	263 S	501 E	15
BH-88	263 S	642 E	15
BH-89	287 S	290 E	10
BH-90	283 S	334 E	15
BH-91	283 S	377 E	20
BH-92	283 S	477 E	15
BH-93	283 S	520 E	20
BH-94	283 S	618 E	15
BH-95	283 S	661 E	20
BH-96	302 S	358 E	15
BH-97	302 S	501 E	15
BH-98	302 S	642 E	15
BH-99	330 S	431 E	10
BH-100	330 S	541 E	10
BH-101	357 S	341 E	10
BH-102	357 S	479 E	10
BH-103	357 S	599 E	10
BH-104	350 S	877 E	10
BH-105	363 S	695 E	10
BH-106	370 S	423 E	10
BH-107	370 S	538 E	10
BH-108	375 S	790 E	15
BH-109	908 N	226 E	10
BH-110	416 N	485 E	15
BH-111	272 N	472 E	10
BH-112	141 N	644 E	10
BH-113	129 S	443 W	15
BH-114	187 S	294 W	10
BH-115	196 S	461 W	15
BH-116	214 S	529 W	10
BH-117	246 S	412 W	15
BH-118	269 S	244 W	15
BH-119	359 S	443 W	15
BH-120	328 S	228 W	15
BH-121	426 S	461 W	15
BH-122	355 S	325 W	10
BH-123	444 S	529 W	10
BH-124	476 S	412 W	15
BH-125	527 S	692 W	15
BH-126	586 S	283 W	10
BH-127	615 S	440 W	10
BH-128	336 S	1073 E	15
BH-129	404 S	1055 E	15
BH-130	422 S	987 E	10
BH-131	453 S	1104 E	10
BH-132	468 S	778 E	15
BH-133	510 S	18 W	10
BH-134	500 S	312 E	10
BH-135	530 S	428 E	10
BH-136	532 S	543 E	10
BH-137	574 S	580 E	10
BH-138	596 S	19 E	10
BH-139	675 S	30 W	10
BH-140	673 S	57 E	10
BH-141	662 S	428 E	10
BH-142	665 S	543 E	10
BH-143	543 S	888 E	10
BH-144	564 S	1117 E	10
BH-145	611 S	870 E	15
BH-146	629 S	802 E	10
BH-147	631 S	1099 E	15
BH-148	660 S	919 E	10
BH-149	649 S	1031 E	10
BH-150	915 S	1400 E	10
BH-151	681 S	1148 E	10
BH-152	830 S	1155 E	10
BH-153	74 N	997 E	10
BH-154	113 S	1200 E	10
BH-155	911 S	1164 E	15
BH-156	823 S	1571 E	10
BH-157	200 S	1400 E	15
BH-158	1178 S	1122 E	15

ELECTRICAL RESISTIVITY TEST (ERT)

MARKING	CO-ORDINATES	
ERT-1	965 S	1040 E
ERT-2	628 S	307 W
ERT-3	534 S	692 W
ERT-4	410 S	126 W
ERT-5	357 S	80 W
ERT-6	374 S	11 W
ERT-7	336 S	79 E
ERT-8	400 S	182 E
ERT-9	386 S	369 E
ERT-10	324 S	463 E
ERT-11	359 S	501 E
ERT-12	354 S	689 E
ERT-13	480 S	771 E
ERT-14	927 S	1496 E
ERT-15	341 S	226 W
ERT-16	290 S	97 W
ERT-17	283 S	54 E
ERT-18	289 S	283 E
ERT-19	296 S	355 E
ERT-20	281 S	488 E
ERT-21	265 S	636 E
ERT-22	181 S	233 W
ERT-23	238 S	70 W
ERT-24	218 S	70 E
ERT-25	205 S	361 E
ERT-26	180 S	501 E
ERT-27	151 S	644 E
ERT-28	621 S	1299 E
ERT-29	125 S	143 W
ERT-30	114 S	140 E
ERT-31	101 S	285 E
ERT-32	78 S	568 E
ERT-33	93 S	711 E
ERT-34	13 S	0.00 E/W
ERT-35	13 N	431 E
ERT-36	226 N	532 E
ERT-37	922 N	261 E
ERT-38	492 S	319 E
ERT-39	542 S	544 E
ERT-40	606 S	378 E
ERT-41	642 S	528 E
ERT-42	590 S	13 E
ERT-43	673 S	21 E
ERT-44	18 N	138 W
ERT-45	37 N	213 E
ERT-46	24 S	299 E
ERT-47	478 S	1232 E
ERT-48	367 N	473 E

PRESSURE METER TEST (PMT)

MARKING	CO-ORDINATES	
PMT-1	382 S	485 W
PMT-2	211 S	36 E
PMT-3	600 S	1071 E
PMT-4	211 S	467 E
PMT-5	211 S	610 E
PMT-6	283 S	77 W
PMT-7	25 N	0.00 E/W
PMT-8	283 S	355 E
PMT-9	25 N	431 E
PMT-10	283 S	639 E

CROSSHOLE SHEAR TEST (CST)

MARKING	CO-ORDINATES	
CST-1	30 S	0.00 E/W
CST-2	30 S	431 E
CST-3	30 S	644 E
CST-4	211 S	35 W
CST-5	211 S	538 E
CST-6	211 S	679 E
CST-7	290 S	62 W
CST-8	290 S	80 E
CST-9	290 S	371 E
CST-10	290 S	514 E
CST-11	290 S	655 E

PLATE LOAD TEST (PLT)

MARKING	CO-ORDINATES		DEPTH (M)
PLT-1	177 N	552 E	1.5
PLT-2	118 S	105 W	1.5
PLT-3	124 S	600 E	1.5
PLT-4	568 S	1299 E	1.5
PLT-5	221 S	227 W	1.5
PLT-6	262 S	113 W	1.5
PLT-7	279 S	252 E	1.5
PLT-8	262 S	681 E	1.5
PLT-9	513 S	63 E	1.5
PLT-10	600 S	477 E	1.5
PLT-11	1121 S	1142 E	1.5

BLOCK VIBRATION TEST (BVT)

MARKING	CO-ORDINATES		DEPTH (M)
BVT-1	283 S	547 E	1.5
BVT-2	283 S	21 W	1.5
BVT-3	180 S	72 E	1.5
BVT-4	180 S	644 E	1.5
BVT-5	221 S	70 W	1.5

SEISMIC REFRACTION TEST (SRT)

S.NO	PROFILE
1	30 S / 99 W TO 30 S / 675 E
2	196 S / 99 W TO 196 S / 675 E
3	283 S / 99 W TO 283 S / 675 E
4	30 S / 99 W TO 283 S / 99 W
5	30 S / 70 E TO 283 S / 70 E
6	30 S / 361 E TO 283 S / 361 E
7	30 S / 498 E TO 283 S / 498 E
8	30 S / 675 E TO 283 S / 675 E

CYCLIC PLATE LOAD TEST (CPLT)

MARKING	CO-ORDINATES		DEPTH (M)
CPLT-1	0.0 N/S	70 W	1.5
CPLT-2	27 S	615 E	1.5
CPLT-3	152 S	90 E	1.5
CPLT-4	148 S	523 E	1.5
CPLT-5	151 S	666 E	1.5
CPLT-6	210 S	397 E	1.5
CPLT-7	262 S	101 E	1.5
CPLT-8	0.0 N/S	70 E	1.5
CPLT-9	0.0 N/S	361 E	1.5
CPLT-10	0.0 N/S	501 E	1.5

BORE HOLE FOR ISG SCOPE(IBH)

MARKING	CO-ORDINATES		DEPTH (M) (REFER NOTE-2)
IBH-1	1008 N	127 W	20
IBH-2	952 N	116 W	10
IBH-3	930 N	562 W	15
IBH-4	913 N	186 W	20
IBH-5	868 N	427 W	15
IBH-6	769 N	114 W	10
IBH-7	746 N	155 W	10
IBH-8	720 N	72 W	10
IBH-9	659 N	361 W	10
IBH-10	649 N	99 E	10
IBH-11	633 N	172 E	10
IBH-12	624 N	729 W	10
IBH-13	597 N	650 W	10
IBH-14	545 N	26 W	15
IBH-15	544 N	321 W	10
IBH-16	526 N	198 E	10
IBH-17	510 N	125 E	10
IBH-18	479 N	625 W	10
IBH-19	439 N	209 W	10
IBH-20	437 N	705 W	10
IBH-21	419 N	11 W	15
IBH-22	401 N	225 E	10
IBH-23	395 N	415 W	10
IBH-24	385 N	152 E	10
IBH-25	341 N	672 W	10
IBH-26	329 N	314 E	10
IBH-27	327 N	124 W	10
IBH-28	288 N	249 E	10
IBH-29	271 N	389 W	10
IBH-30	242 N	176 E	10
IBH-31	232 N	572 W	10
IBH-32	216 N	646 W	10
IBH-33	193 N	57 W	10
IBH-34	182 N	252 W	10
IBH-35	119 N	548 W	10
IBH-36	116 N	417 W	10
IBH-37	74 N	615 W	10
IBH-38	69 N	142 E	10
IBH-39	20 N	249 E	10
IBH-40	13 N	139 W	10
IBH-41	158 S	0.0 E/W	10
IBH-42	158 S	431 E	10
IBH-43	1578 S	38 W	10
IBH-44	144 S	867 E	10
IBH-45	167 S	154 W	10
IBH-46	1558 S	94 W	10
IBH-47	166 S	579 E	10
IBH-48	2110 S	140 E	10

CYCLIC PLATE LOAD TEST FOR ISG SCOPE (ICPLT)

MARKING	CO-ORDINATES		DEPTH (M)
ICPLT-1	608 N	705 W	1.5
ICPLT-2	158 S	326 E	1.5
ICPLT-3	158 S	36 W	1.5

PLATE LOAD TEST FOR ISG SCOPE (IPLT)

MARKING	CO-ORDINATES		DEPTH (M)
IPLT-1	744 N	364 W	1.5
IPLT-2	518 N	271 E	1.5
IPLT-3	508 N	490 W	1.5
IPLT-4	305 N	228 W	1.5
IPLT-5	0.0 N/S	143 E	1.5
IPLT-6	1607 S	62 W	1.5
IPLT-7	207 S	192 E	1.5
IPLT-8	198 S	261 E	1.5

PRESSURE METER TEST FOR ISG SCOPE (IPMT)

MARKING	CO-ORDINATES	
IPMT-1	1027 N	155 W
IPMT-2	969 N	338 W
IPMT-3	834 N	611 W
IPMT-4	409 N	2 W

CROSSHOLE SHEAR TEST (ICST)

MARKING	CO-ORDINATES	
ICST-1	639 N	753 W
ICST-2	613 N	674 W

ELECTRICAL RESISTIVITY TEST FOR ISG SCOPE (IERT)

MARKING	CO-ORDINATES	
IERT-1	808 N	111 W
IERT-2	793 N	231 W
IERT-3	482 N	279 E
IERT-4	396 N	709 W
IERT-5	54 N	139 W
IERT-6	20 N	301 E
IERT-7	23 S	208 E
IERT-8	101 S	199 E
IERT-9	1591 S	110 W
IERT-10	232 S	184 E

TRIAL PIT (TP)

MARKING	CO-ORDINATES		DEPTH (M)
TP-1	851 N	194 E	1.5
TP-2	357 N	445 E	1.5
TP-3	64 S	29 W	1.5
TP-4	64 S	99 E	1.5
TP-5	64 S	396 E	1.5
TP-6	64 S	659 E	1.5
TP-7	236 S	236 E	1.5
TP-8	748 S	1309 E	1.5
TP-9	32 S	931 E	1.5
TP-10	318 S	1693 E	1.5
TP-11	280 S	1 E	1.5
TP-12	280 S	432 E	1.5
TP-13	280 S	585 E	1.5
TP-14	313 S	361 W	1.5
TP-15	404 S	899 E	1.5
TP-16	482 S	926 E	1.5

BORE HOLE (BH)

MARKING	CO-ORDINATES		DEPTH (M) (REFER NOTE-2)
BH-159	961 S	890 E	10
BH-160	1040 S	1021 E	10
BH-161	434 S	1627 E	15
BH-162	314 S	1182 E	10
BH-163	1413 S	1173 E	10

GEOTECHNICAL INVESTIGATION LEGEND:

1. BOREHOLE (BH / IBH)
2. CYCLIC PLATE LOAD TEST (CPLT / ICPLT)
3. TRIAL PIT (TP)
4. PRESSURE METER TEST (PMT / IPMT)
5. CROSSHOLE SHEAR TEST (CST / ICST)
6. ELECTRICAL RESISTIVITY TEST (ERT / IERT)
7. PLATE LOAD TEST (PLT / IPLT)
8. BLOCK VIBRATION TEST (BVT)
9. SEISMIC REFRACTION TEST (SRT)

N O T E S:-

1. ALL DIMENSIONS ARE IN METERS UNLESS NOTED OTHERWISE.
2. BORE HOLE SHALL BE DRILLED UPTO THE DEPTH INDICATED AGAINST EACH BORE HOLE OR UPTO 5M IN ROCK WITH CONTINUOUS RQD OF 50% WHICHEVER IS EARLIER. ROCK CORES SHALL BE ARRANGED AND PLACED IN WOODEN CORE BOXES SEQUENTIALLY AND SHALL BE NUMBERED SERIALLY AS PER SPECIFICATION.
3. BACKFILLING OF BORE HOLES AND PITS SHALL BE AS PER SPECIFICATION AND AS DIRECTED BY THE ENGINEER-IN-CHARGE.
4. STARTING DEPTH OF STANDARD PENETRATION TEST (SPT) SHALL BE 1M BELOW GROUND LEVEL AND THE TEST SHALL BE CONDUCTED AT EVERY 1M INTERVAL ALTERNATE TO COLLECTION OF UNDISTURBED SAMPLE (UDS) UPTO 5M DEPTH AND AT EVERY 1.5M INTERVAL ALTERNATE TO COLLECTION OF UDS BEYOND 5M DEPTH, AT CHANGE OF STRATA & AT DEPTHS WHEREVER UDS COULD NOT BE COLLECTED.
5. STARTING DEPTH OF COLLECTION OF UDS SHALL BE 2M BELOW GROUND LEVEL AND UDS SHALL BE COLLECTED AT 1M INTERVAL ALTERNATE TO CONDUCTING SPT UPTO 5M DEPTH & AT EVERY 1.5M INTERVAL ALTERNATE TO CONDUCTING SPT BEYOND 5M DEPTH.
6. PUMP IN TYPE FIELD PERMEABILITY TEST SHALL BE CARRIED OUT AT 1.5M, 4M & 8M DEPTH BELOW GROUND LEVEL IN BH-3, BH-20, BH-48, BH-66, BH-121, BH-135, BH-150, BH-161, IBH-1, IBH-3 & IBH-14.
7. ELECTRICAL RESISTIVITY TEST SHALL BE CARRIED OUT AS PER WENNER'S METHOD.
8. PRESSURE METER TEST SHALL BE CARRIED OUT AT 1M, 3M, 5M, 7M, 9M, 12M, 15M, 18M & 20M DEPTH BELOW GROUND LEVEL.
9. GROUND WATER SAMPLE SHALL BE COLLECTED FROM BH-20, BH-50, BH-74, BH-110, BH-118, BH-140, BH-147, IBH-1, IBH-10, IBH-12, IBH-26, IBH-44 & IBH-47.
10. CROSS HOLE SHEAR WAVE TEST SHALL BE CARRIED OUT AT 2M, 4M, 6M, 8M, 10M, 12M, 15M, 18M & 20M DEPTH BELOW GROUND LEVEL.
11. GEOTECHNICAL INVESTIGATION SHALL BE CARRIED OUT AS PER SPECIFICATION NO. PE-TS-999-603-002 AND PE-DC-K52-602-C002.
12. DO NOT SCALE THIS DRAWING.

REF DRG :

PE-DG-417-100-M001, REV-01 "PLOT PLAN".

REV.	DATE	ALTD	CHD	APPD
02	09.04.18	PK -sd-	TMSR/AKV -sd-	CPK -sd-
	DRAWING IS GENERALLY REVISED AS PER REVISED PLOT PLAN.			
01	13.11.15	PK -sd-	TMSR -sd-	CPK -sd-
	DRAWING REVISED DUE CHANGE IN PLOT PLAN. REVISION MARKED 1 THUS.			

JOB NO. 417

STATUS CONTRACT

DISTRIBUTION

TELANGANA STATE POWER GENERATION CORPORATION LIMITED
HYDERABAD, TELANGANA STATE

TSGENCO-YADRADRI TPS
THERMAL POWER PLANT 5X800 MW
AT VEERLAPALEM VILLAGE,DAMERACHERLA MANDAL
NALGONDA DISTRICT, TELANGANA STATE

BHARAT HEAVY ELECTRICALS LTD
POWER SECTOR
PROJECT ENGINEERING MANAGEMENT
NOIDA

COPY RIGHT AND CONFIDENTIAL
The information on this document is the property of BHARAT HEAVY ELECTRICALS LIMITED it must not be used directly or indirectly in any way detrimental to the interest of the company.

DEPT CODE		NAME	SIGN	DATE
C	DRN	S.ND	-SD-	26.08.2015
	DESN	V.V.	-SD-	26.08.2015
	CHD	TMSR	-SD-	26.08.2015
	APPD	CPK	-SD-	26.08.2015

TITLE: GEOTECHNICAL INVESTIGATION LAYOUT

SCALE 1:1600

DRAWING NO. PE-DG-417-602-C001 SHEET 1 OF 1 REV. 02

DRAWING NO. PE-DG-417-100-M001

FIRST ANGLE PROJECTION

ALL DIMENSIONS ARE IN MM

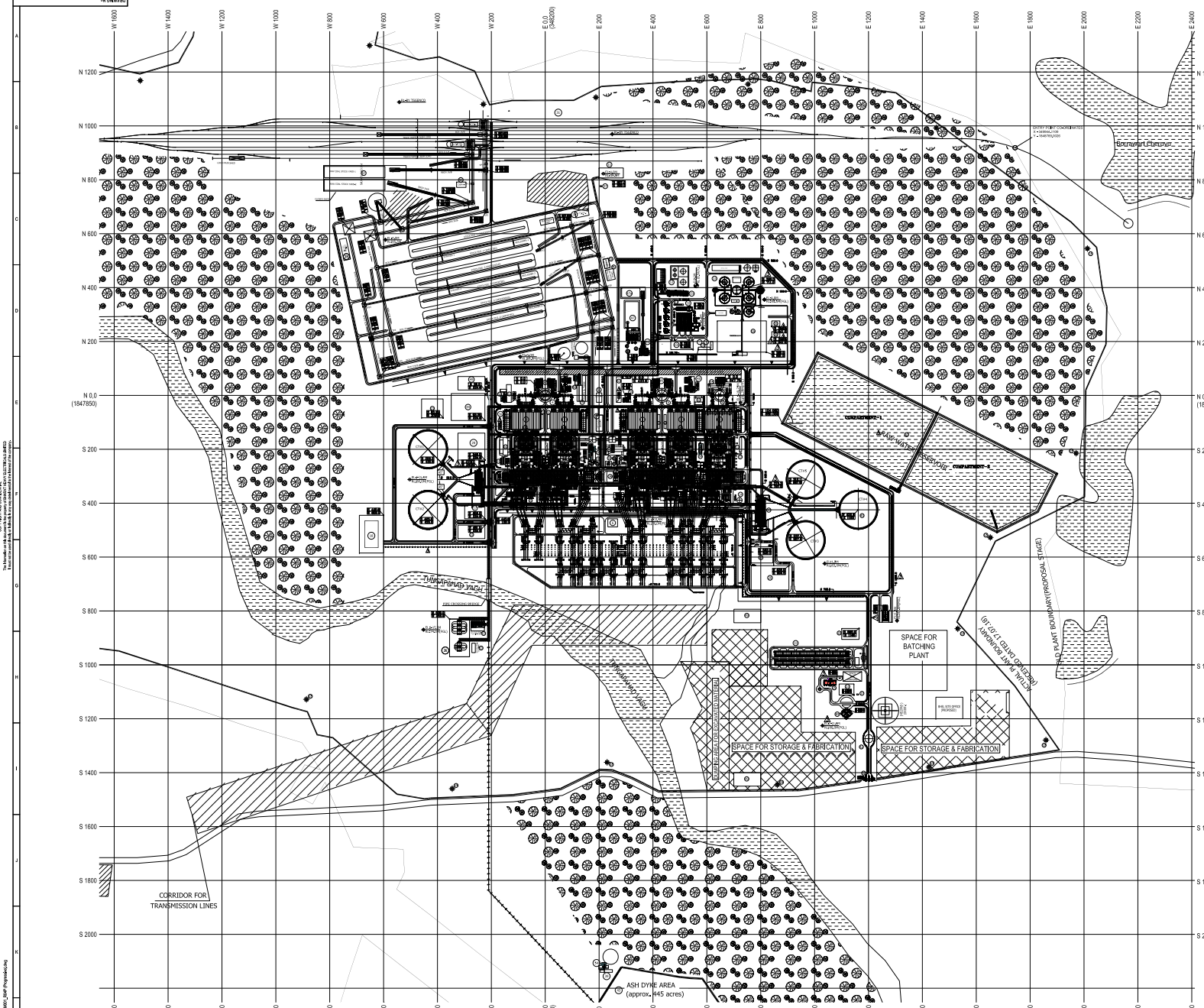

SL.NO.	DESCRIPTION	CONFIG.	SCOPE	ZONE
1	POWER HOUSE BLDG	-	BHEL	S4,T&D
2	BOILER	-	BHEL	S4,T&D
3	ESP	-	BHEL	S4,T&D
4	ESP CONTROL BUILDING	-	BHEL	S4,T&D
5	CHIMNEY	3X1	BHEL	S4,T&D
6	TRANSFORMER YARD	-	BHEL	S4,T&D
7	SWITCHYARD & SWIT. CONT. ROOM	-	BHEL	S4
8	SUPPLY BLDG.	2 Nos.	TSGENCO	S4,T,L&D
9	DG BUILDING	2 Nos	BHEL	S4,L&D
10	SPACE FOR AIR WASHER	-	BHEL	S4,T,L&D
11	DM PLANT	COMMON	BHEL	S4
12	CPU FILTER PLANT	COMMON	BHEL	S4
13	FUEL OIL UNLOADING STAG.(PTS)	COMMON	BHEL	S4
14	FUEL OIL TANK FARM AREA	COMMON	BHEL	S4
15	FUEL OIL PUMPING STN	COMMON	BHEL	S4
16	FIRE PROTECTION PLANT	COMMON	BHEL	S4
17	DG COOLING TANK	1No.	BHEL	S4
18	FIRE WATER PH CLM TANK	COMMON	BHEL	S4
19	SUMPS & WATER PH CLM TANK	COMMON	BHEL	S4
20	ABS FILTRATION STATION	2 x 3	BHEL	S4,S4-4
21	N2 GEN. PLANT & CYLINDERS SHED	COMMON	BHEL	S4
22	CAUSTIC & SODA ASH	2 x 3	BHEL	S4,S4-4
23	CHLORINATION & CW TREAT. PLANT	2 x 3	BHEL	S4,S4-4
24	EFFLUENT TREAT. PLANT	COMMON	BHEL	S4
25	BIOMASS TREAT. PLANT	COMMON	BHEL	S4
26	STORE BUILDING	COMMON	TSGENCO	S4,T
27	FIRE STATION BUILDING	COMMON	TSGENCO	S4,T
28	CAFETERIA	2Nos	TSGENCO	S4,T,L&D
29	FLY ASH SILO NOS	COMMON	BHEL	S4
30	[illegible] (PART OF PT PLANT)	-	-	-
31	WORKSHOP	COMMON	TSGENCO	S4,T
32	COMPRESSOR HOUSE	2 x 3	BHEL	S4,T,L4
33	COAL STOCK AREA	COMMON	BHEL	S4,T,L,C4
34	MARSHALLING YARD AND TRUNCKS	COMMON	TSGENCO	S4,T,D,L
35	GATE COMPLEX COMSEC/PERIPT BLDG.	COMMON	TSGENCO	S4
36	PERMANENT STORES (WAGON)	2X1	TSGENCO	S4,N,S
37	RESIDENCE BUILDING	COMMON	BHEL	S4,N,S
38	CHP ELECTRICAL BLDG-1	1No.	BHEL	S4,S
	CHP ELECTRICAL BLDG-2	1No.	BHEL	S4,S
	CHP ELECTRICAL BLDG-3	1No.	BHEL	S4
	CHP ELECTRICAL BLDG-4	1No.	BHEL	S4
	CHP ELECTRICAL BLDG-5	1No.	BHEL	S4
39	CHP COAL LAB (PTS)	1No.	TSGENCO	S4
40	ANCILLARY SHED	1No.	BHEL	S4,T,D,L,T,S
41	CST + PUMP HOUSE	2 Nos.	BHEL	S4
42	WTPH, SUMPS, CHEM. BLDG & MCC	COMMON	BHEL	S4
43	SDCT	2 Nos.	BHEL	S4,S,T,L,T,D
44	RAW WATER RESERVOIR	COMMON	TSGENCO	S4,T,T
45	PILE FOUNDATION STORE	-	TSGENCO	S4
46	ASH DYKE AREA AND TRUNCKS	-	TSGENCO	S4,T,D
47	WAGON STORAGE/HANDLING PLANT	COMMON	BHEL	S4
48	FWD	-	BHEL	S4,T,BHEL
49	CBC STONE PROTECTION AREA	COMMON	BHEL	S4,N,S
50	OPTICAL FIBER CABLE STORAGE	COMMON	BHEL	S4,N,S
51	CBC STONE STORAGE SHEDS	COMMON	BHEL	S4,N,S
52	FIRE HOSE & CONTROL ROOM	2 Nos.	BHEL	S4,BHEL
53	RAIN WATER HARVESTING PONDS	2 Nos.	TSGENCO	S4,N,S,S,C
54	ASH SLURRY PUMP HOUSE	2 Nos.	BHEL	S4,T,H,T,N,S
55	VACCUM PUMP HOUSE	2 Nos.	BHEL	S4,T,T,B
56	SUMPS (PRECIPITATOR)	COMMON	BHEL	S4
56A	ASH WATER PH (PRECIPITATOR)	COMMON	BHEL	S4
57	AHP COMPRESSOR HOUSE	2 Nos.	BHEL	
58	AHP ELECTRICAL BLDG-1	1No.	BHEL	S4,T,S,H,T,T,N,S,C,T,D
	AHP ELECTRICAL BLDG-2	1No.	BHEL	
	AHP ELECTRICAL BLDG-3	1No.	BHEL	
	AHP ELECTRICAL BLDG-4	1No.	BHEL	
	AHP ELECTRICAL BLDG-5	1No.	BHEL	
	AHP ELECTRICAL BLDG-6	1No.	BHEL	
	[illegible]	1No.	TSGENCO	
59	[illegible]	6 Nos.	BHEL	S4,T,H,T,N,S
60	RAW COAL STOCK YARD	-	BHEL	S4,T
61	COAL & ASH SILOS PANS	4 Nos.	BHEL	S4,T,T,B
62	SIMULATOR CUM TRAINING BLDG.	COMMON	TSGENCO	S4,T,D
63	CONTROL & OFFICE AREA	2Nos.	BHEL	S4,T,H,T,N,S
64	CWPH & SUMPS	2 Nos.	BHEL	S4,T,H,T,N,S
65	ESP ANCILLARY & INSPECT. TOWER	4 Nos.(4 E)	BHEL	S4,T,T,B
66	ASH HANDLING SYS. & ESP HOPPER	2 Nos.	BHEL	S4
67	ASH HANDLING SYS. & ESP HOPPER	2 Nos.	BHEL	S4
68	BA DISPOSAL TANK CUM DISP. SUMP	2Nos.(2E)	BHEL	S4,T,B
69	WATER TOWER	2 Nos.	TSGENCO	S4,N,S,H,D,D

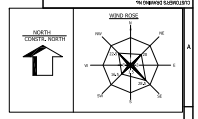

REV.	DATE	ALTD	CHD	APPD

REV.	DATE	ALTD	CHD	APPD
03	15.11.18	SNL	BKA	JJ
02	15.11.18	SNL	BKA	JJ
01	06.04.18	AMS	BKA/MK	JJ

REV.	DATE	ALTD	CHD	APPD
03	PLOT PLAN REVISED AS PER COMMENTS RECEIVED DATED 15.07.18 REVISED AS MARKED 3 .			
02	PLOT PLAN REVISED AS PER MOM OF MEETING HELD ON 26.04.18 AT VIDYUT SOUDHA, HYDERABAD REVISED AS MARKED 2 .			
01	PLOT PLAN REVISED AS PER MOM OF KICK-OFF MEETING HELD ON 26+27.02.18 AT VIDYUT SOUDHA, HYDERABAD REVISED IN LINE WITH TCE COMMENTS RECEIVED VIA EMAIL DATED 15.03.18.			

CUSTOMER: TELANGANA STATE POWER GENERATION CORPORATION LTD
TELANGANA, INDIA
YADADRI TPS (5X800 MW)

CONSULTANT: TATA CONSULTING ENGINEERS LIMITED
BANGALORE INDIA

BHARAT HEAVY ELECTRICALS LTD
POWER SECTOR PROJECT ENGINEERING MANAGEMENT
NOIDA

JOB NO. 417
STATUS CONTRACT
DISTRIBUTION

COPYRIGHT AND CONFIDENTIAL
The information on this document is the property of BHARAT HEAVY ELECTRICALS LIMITED it must not be used directly or indirectly in any way detrimental to the interest of the company.

	NAME	DATE
DRN	AMS	-'-do- 15.12.17
CKDN	MK	-'-do- 15.12.17
CHD	BKA	-'-do- 15.12.17
APPD	JJ	-'-do- 15.12.17

TITLE: PLOT PLAN

SCALE 1:5000

DRAWING NO. PE-DG-417-100-M001

SHEET 1 OF 1 REV. 03

SIZE-A0

ELECTRONIC FILE NAME : P:\PDG\417\CAD\M001 SHP-Proposals.dwg

Last Mod By: BKA
Date: 15.12.2017 - 09:04

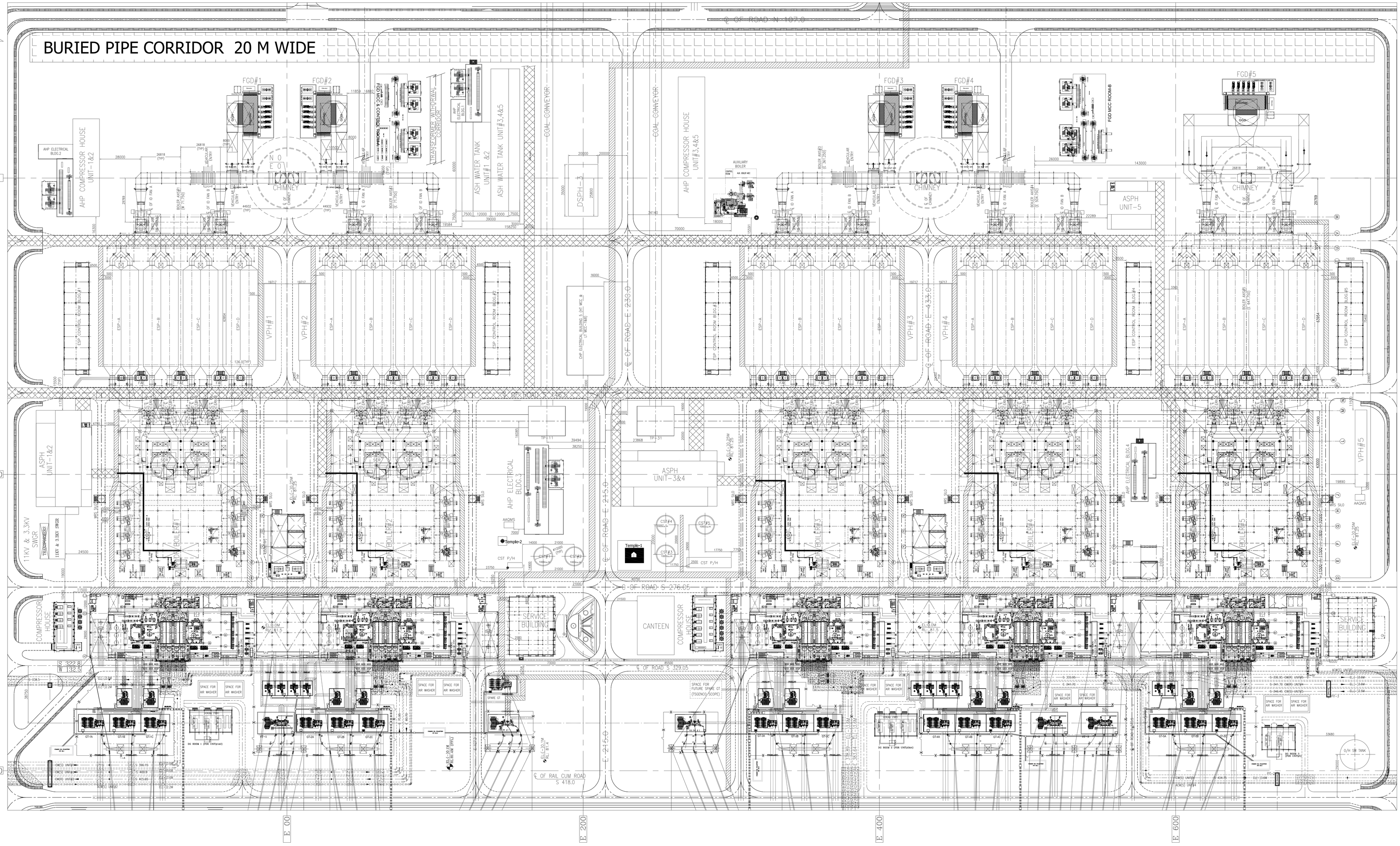

NOTES:-

1. ALL DIMENSIONS AND CO-ORDINATES ARE IN MM UNLESS NOTED OTHERWISE.
2. THE FINISHED FLOOR LEVEL (FFL) OF POWER HOUSE BUILDING GROUND FLOOR IS EL. + 0.00M WHICH CORRESPONDS TO RL. 81.5M, i.e., 0.5M ABOVE FGL (RL81.0M) IN MAIN PLANT AREA.
3. BOILER AREA FINISHED FLOOR LEVEL IS 250MM BELOW 0.0M I.E. RL 81.25M.
4. TRANSFORMER YARD FINISHED FLOOR LEVEL IS 100MM BELOW 0.0M I.E. RL 81.4M.
5. MILL BAY FINISHED FLOOR LEVEL IS SAME AS POWER HOUSE BUILDING I.E. EL. 0.00M (RL 81.5M).
6. THE APPROACH ROADS & PIPE SUPPORTING STRUCTURES SHOWN IN THIS DRAWING ARE INDICATIVE ONLY.THE SAME WILL BE FURTHER UPDATED BASED ON FINALIZATION OF RESPECTIVE FACILITIES /BUILDINGS.
7. LOCATION AND SIZES OF VARIOUS BUILDINGS AND FACILITIES SHOWN ARE PRELIMINARY. THE SAME WILL BE FURTHER UPDATED BASED ON FINALIZATION OF RESPECTIVE FACILITIES /BUILDINGS.
8. ALL ROADS, DRAINS AND RESPECTIVE EMBANKMENTS ARE IN TSGENCO SCOPE; FOR NON PLANT BUILDINGS SCOPE/TP DEMARCATION SHALL BE AS PER TECHNICAL MOM DATED 04/10/2017 & REVISED LOI ED/TPC/SE-III/EME-9/YADADRI TPS , D.NO.102/17 dt. 17/10/2017.
9. PIPE RACK SHOWN IS INDICATIVE ONLY.
10. FOR ACTUAL DIMENSION IN TRANSFORMER YARD AND TG BUILDING KINDLY REFER RESPECTIVE DRGS.

REFERENCE DRGS.:-

1.PLOT PLAN	: PE-DG-417-100-M001(BHEL-PEM)
2.TG HALL EQUIPMENT LAYOUT AT 0.0M	: PE-DG-417-100-M003 (BHEL-PEM)
4.KEY PLAN OF BOILERS	: 0-00-020-77320 (BHEL-TRY)
5.LAYOUT PLAN OF 400KV SWITCHYARD	: TB-0-387-510-002 (BHEL-TBG)
LAYOUT OF TRANSFORMER YARD	: PE-DG-417-100-E001_R03 (BHEL-PEM)

LEGENDS.:-

1. PIPE CUM CABLE RACK
2. ASH SLURRY PIPE CUM CABLE RACK
3. RAIL TRACK

REV.	DATE	ALTD	CHD	APPD	REV.	DATE	ALTD	CHD	APPD	REV.	DATE	ALTD	CHD	APPD	REV.	DATE	ALTD	CHD	APPD

JOB NO.	417
STATUS	CONTRACT
DISTRIBUTION	

REV.	DATE	ALTD	CHD	APPD
01	29.10.18	AS	MK/BKA	JJ

DRG. REVISED AS PER TSGENCO/TCE COMMENTS RECIVED DATED 14.08.18 TRANS.NO. PEM/PGIV/417/16.

COPY RIGHT AND CONFIDENTIAL
The information on this document is the property of BHARAT HEAVY ELECTRICALS LIMITED it must not be used directly or indirectly in any way deterimental to the interest of the company.

CUSTOMER: TELANGANA STATE POWER GENERATION CORPORATION LTD
TELANGANA, INDIA
5x800 MW YADADRI TPS, NALGONDA

OWNER'S CONSULTANT: TATA CONSULTING ENGINEERS LIMITED
BANGALORE INDIA

BHARAT HEAVY ELECTRICALS LTD
POWER SECTOR
PROJECT ENGINEERING MANAGEMENT
NOIDA

DEPT CODE		NAME	SIGN	DATE
M	DRN	AMS		08/01/18
	DESN	MK		08/01/18
	CHD	BKA		08/01/18
	APPD	JJ		08/01/18

TITLE
MAIN EQUIPMENT PLAN

DEPT. | SCALE 1:850 | DRAWING NO. PE-DG-417-100-M002
SIGN | SHEET 1 OF 1 | REV. 01
SIZE-A0

ELECTRONIC FILE NAME : PE-DG-417-100-M002_R01.dwg