COPY RIGHT AND CONFIDENTIAL
THE INFORMATION ON THIS DOCUMENT IS THE PROPERTY OF BHARAT HEAVY ELECTRICALS LIMITED. IT MUST NOT BE USED DIRECTLY OR INDIRECTLY IN ANY WAY DETRIMENTAL TO THE

PROJECT: RATE CONTRACT FOR LIE/LIR (PACKAGE-1& 2 AS BELOW)

PACKAGE-1: NTPC & DVC PROJECTS

PACKAGE-2: NON-NTPC PROJECTS (ADANI & TNPGCL PROJECTS)

CUSTOMER: M/s NTPC (M/s NTPC & M/s DVC) AND NON NTPC (M/s TNPGCL & M/s ADANI)

PURCHASE SPECIFICATION
FOR
LOCAL INSTRUMENT ENCLOSURE / LOCAL INSTRUMENT RACK (LIE/LIR)

REVISIONS: 00	APPROVED BY		
	AMITKUMAR SHARMA		
	PREPARED BY	ISSUED	DATE
	RAJESH LINGUTLA	416	24/09/2026

CONTENTS

SECTION	DESCRIPTION	DOCUMENT REFERENCE NO:	NO OF SHEETS
A	GENERAL INSTRUCTIONS	CE/416/LIE/LIR/GI	3
B	PRE-QUALIFICATION REQUIREMENTS	CE/416/LIE/LIR/PQR	3
C	TECHNICAL SPECIFICATION FOR LIE/LIR NTPC PROJECTS (PACKAGE-1)	CE/416/NTPC/RC/LIE/LIR /TS	66
D	TECHNICAL SPECIFICATION FOR LIE/LIR NON-NTPC PROJECTS (PACKAGE-2)	CE/416/NON-NTPC/RC/LIE/LIR /TS	65

COPY RIGHT AND CONFIDENTIAL
THE INFORMATION ON THIS DOCUMENT IS THE PROPERTY OF BHARAT HEAVY ELECTRICALS LIMITED. IT MUST NOT BE USED DIRECTLY OR INDIRECTLY IN ANY WAY DETRIMENTAL TO THE

PROJECT: RATE CONTRACT FOR LIE/LIR

CUSTOMER: M/s NTPC (M/s NTPC & M/s DVC) AND NON NTPC (M/s TNPGCL & M/s ADANI)

GENERAL INSTRUCTIONS TO BIDDERS

REVISIONS: 00	APPROVED BY		
	AMITKUMAR SHARMA		
	PREPARED BY	ISSUED	DATE
	RAJESH LINGUTLA	416	24/09/2026

COPY RIGHT AND CONFIDENTIAL
THE INFORMATION ON THIS DOCUMENT IS THE PROPERTY OF BHARAT HEAVY ELECTRICALS LIMITED. IT MUST NOT BE USED DIRECTLY OR INDIRECTLY IN ANY WAY DETRIMENTAL TO THE INTEREST OF THE COMPANY.

SECTION- A

GENERAL INSTRUCTIONS TO BIDDERS:

1.0 All required documents against this Tender/Specification shall be submitted in **English only**.

2.0 Introduction: Bidders are required to offer **Local Instrument Enclosures (LIE) and Local Instrument Racks (LIR)** suitable for **Coal-Fired Thermal Power Plant applications**.

3.0 The **Pre-Qualification Requirements** are clearly specified in **Section-B** of this Specification. Bidders shall carefully read and comply with all the requirements and submit all the necessary details and supporting documents for **BHEL's review and acceptance**.

EVALUATION METHODOLOGY:

1. **Technical Bid Evaluation:**
   BHEL shall initially review the technical bid submitted by the Bidder for compliance with the requirements specified in the Tender/Specification, including the applicable **PQR and technical requirements**.
2. **Vendor approval:**

   a) The procurement of LIE/LIR being made under this tender is for supply to various projects of BHEL. It is a contractual requirement of these projects that the sub-vendor (i.e. bidder of this tender) should be approved by the respective end customer.
   Accordingly, customer approval of the bidder, becomes a pre-requisite for acceptance of offer of such bidders in this tender.

   b) As per the laid down procedure of the customer of various projects, bidder should submit following documents along with their techno-commercial bid:

      i. **Package–1: NTPC & DVC Projects** -For obtaining customer approval from M/s NTPC and M/s DVC, the Bidder shall submit the duly filled. Sub-Supplier Questionnaire Format (enclosed as part of specs), along with all required supporting documents. BHEL Shall forward the submitted documents to M/s NTPC and M/s DVC for obtaining their approval of bidder.

      ii. **Package–2: Non-NTPC Projects (Adani & TNPGCL Projects)-**For obtaining customer approval from M/s Adani and M/s TNPGCL, the Bidder shall submit the following documents along with the technical bid:

         1. Unpriced PO copies for relevant supplies/executed orders.
         2. List of manufacturing and testing facilities.
         3. Organization chart
         4. Product catalogue / technical literature.
         5. Any other documents required by BHEL for obtaining customer approval

COPY RIGHT AND CONFIDENTIAL
THE INFORMATION ON THIS DOCUMENT IS THE PROPERTY OF BHARAT HEAVY ELECTRICALS LIMITED. IT MUST NOT BE USED DIRECTLY OR INDIRECTLY IN ANY WAY DETRIMENTAL TO THE INTEREST OF THE COMPANY.

c. Bidders are requested to seek pre-bid queries prior to submission of the above documents with their techno-commercial bids, in case of need of any clarification.

d. After opening of techno-commercial bids, BHEL will evaluate the documents submitted by bidder. In case BHEL finds any document to be incomplete, a total of 7 days' time will be given to the bidder for submitting the required documents as indicated in the email correspondence.

e. BHEL shall allow a maximum period of 30 days or completion of techno-commercial evaluation of all bidders, whichever is later, for receipt of customer approval after submission of complete documents/forms. This period shall include the time taken by the bidder to furnish replies/additional documents sought by the customer on first or subsequent submissions. In case the approval is not received, offer of such bidders will be rejected in the tender. However, BHEL shall continue to pursue with the end customer for approval of the bidder so that bidder is empanelled by such customer and be able to qualify in subsequent tenders.

f. BHEL shall simultaneously carry out techno-commercial evaluation of all bidders after bid opening and pursue customer approval of bidders for whom such approval is required.

g. Bidders are therefore requested that they should submit all documents / forms as indicated at sl no 2(b) above in their own interest of receiving the timely approval of the end customers and be considered in this tender.

3. **Commercial Bid Opening/Evaluation:**

Only those Bidders who:

- meet all the **technical requirements** including PQR specified in the tender; and
- **customer approval of the proposed bidder from respective customer of that package.**

shall be considered as **technically qualified** for further commercial evaluation.

4. Important Notes:

4.1 Technical Discussions / Clarifications

Whenever required during the evaluation of **PQR and Technical Offers/Bids**, the Bidder/Vendor shall attend technical discussions and provide clarifications at **BHEL Electronic Division, Bengaluru within 3 days' notice**.

Further, in the event of placement of an order, during the approval of vendor documents by the **End User/Customer**, the Vendor shall, wherever required, accompany BHEL representatives for discussions with the End User/Customer.

4.2 Changes in BOM / Technical Specifications

Any change in **BOM, technical specifications, or other technical requirements** from the Tender requirements shall be discussed only with the Bidders who have submitted their quotations against this Tender.

Accordingly, this tender specification does **not restrict any Bidder from submitting its offer** against the Tender.

COPY RIGHT AND CONFIDENTIAL
THE INFORMATION ON THIS DOCUMENT IS THE PROPERTY OF BHARAT HEAVY ELECTRICALS LIMITED. IT MUST NOT BE USED DIRECTLY OR INDIRECTLY IN ANY WAY DETRIMENTAL TO THE

PROJECT: RATE CONTRACT FOR LIE/LIR

CUSTOMER: M/s NTPC (M/s NTPC & M/s DVC) AND NON NTPC (M/s TNPGCL & M/s ADANI)

PRE-QUALIFICATION REQUIREMENTS

REVISIONS: 00	APPROVED BY		
	AMITKUMAR SHARMA		
	PREPARED BY	ISSUED	DATE
	RAJESH LINGUTLA	416	24/09/2026

SECTION- B

Pre-Qualification Requirements (PQR) of Bidders for Local Instrument Rack (LIR):

Criteria	Documents to be submitted by Bidder	Bidder to fill following details
1. Prior Experience – Thermal Power Plant		
Bidder shall have designed, manufactured and supplied LIE/LIR assemblies capable of accomodating Minimum 10 PT/DPT/FT for at least one unit of a coal-fired thermal power plant having unit rating **≥ 500 MW.**	• Reference List of similar projects • Unpriced PO clearly indicating supply of LIE/LIR • Customer-approved Datasheets/Drawings, wherever applicable • Inspection/Inspection Release Reports • Dispatch/Material Receipt documents, wherever applicable	1. Ref List table: Project name, customer, plant capacity, unit rating, scope supplied, PO No/Date 2. Attched: Yes / No 3. Attched: Yes / No 4. Attched: Yes / No 5. Attched: Yes / No
2. Manufacturing Facilities		
Bidder shall have basic manufacturing facilities available **in-house** and adequate infrastructure, manpower, machinery, assembly and testing facilities for manufacturing/testing of LIE/LIR.	1. List of machinery - minimum CNC machine, Bending machine, Drilling machine, welding machine and laser cutting machines sheet-metal fabrication facility capable of sheet-metal fabrication up to 4 mm thickness and plate cutting up to 10 mm thickness. 2. List of testing equipments: minumum Hydrotesting machine pressure rating of 530bar , Dry film thickness gauge, Insulation resistane tester. 3. List of equipment for epoxy-based tank-process painting and powder coating facility.	1. Attched: Yes / No 2. Attched: Yes / No 3. Attched: Yes / No
3. Qualified Welders		Name/qualification of welders, experience, qualification certificate details and validity. 1. Attched: Yes / No
Minimum **2 experienced/qualified welders** competent to carry out welding of specified materials.	• Details of qualified welders	
4. Factory Area		Total factory area location Owned / leased / rented:

SECTION- B

Pre-Qualification Requirements (PQR) of Bidders for Local Instrument Rack (LIR):

Criteria	Documents to be submitted by Bidder	Bidder to fill following details
5. Drawing Office & Design Resources		**Declaration by Competent Authority** No. of draughtsmen, names/experience, software name/version, number of licenses and validity. 1. Attched: Yes / No
Designated drawing office with minimum **3 draughtsmen** and PCs/Laptops with valid licensed AutoCAD/equivalent software.	• Drawing office details • List of draughtsmen • Details of PCs/Laptops- min 3 nos • Valid licensed AutoCAD/equivalent software details	
6. Factory License		License No., issuing authority, validity, factory location renewal status, if applicable. Factory license attached: Yes/ No Proof of renewal: Yes /No
Valid Factory License applicable to the manufacturing facility offered for the subject supply. If expiring within **3 months from Technical Bid opening**, proof of renewal shall be submitted.	• Valid Factory License • Proof of Renewal, if applicable	
7. Financial Turnover	• Letter from Registered Chartered Accountant stating turnover for all three financial years	Turnover for FY 2025-26, FY 2024-25 and FY 2023-24; calculate average turnover and provide document reference. 1. Attched: Yes / No
Average financial turnover of **more than ₹15 Crores** during FY **2025-26, 2024-25 and 2023-24**.		
In case bidder is Fully/partially outsourcing activites related to above PQR criteria clause no: 2 & 5 then bidder shall provide details of such outsourced agency/facility along with the scope of outsourced work and supporting credentials of such sub-vendor to meet the relevant PQR criteria.		• Outsourced agency/facility details • Scope of outsourced work • Supporting credentials 1. Attched: Yes / No

PROJECT: RATE CONTRACT FOR LIE/LIR

CUSTOMER: M/s NTPC & M/s DVC

CONSULTANT: M/s NTPC

COPY RIGHT AND CONFIDENTIAL

THE INFORMATION ON THIS DOCUMENT IS THE PROPERTY OF BHARAT HEAVY ELECTRICALS LIMITED. IT MUST NOT BE USED DIRECTLY OR INDIRECTLY IN ANY WAY DETRIMENTAL TO THE INTEREST OF THE COMPANY.

TECHNICAL SPECIFICATION
FOR
LOCAL INSTRUMENT ENCLOSURE / RACKS
(LIE / LIR)

REVISIONS :	APPROVED BY		
	AMITKUMAR SHARMA		
	PREPARED BY	ISSUED	DATE
	RAJESH LINGUTLA	416	21/09/26

COPY RIGHT AND CONFIDENTIAL

THE INFORMATION ON THIS DOCUMENT IS THE PROPERTY OF BHARAT HEAVY ELECTRICALS LIMITED . IT MUST NOT BE USED DIRECTLY OR INDIRECTLY IN ANY WAY DETRIMENTAL TO THE INTEREST OF THE COMPANY.

CONTENTS

SL NO	DESCRIPTION	REFERENCE NO
01	SCOPE OF SUPPLY	CE/416/ NTPC/RC/LIE-LIR/SOS REV. 00 ,SHEETS 05
02	TECHNICAL REQUIREMENTS	CE/416/ LIELIR/TR REV. 00, SHEETS 09
03	HOOKUP SCHEMES	CE/416/ NTPC/RC/HUP REV. 00 ,SHEETS 33
04	DRAWINGS FOR LIE-LIR	CE/416/LIE/LIR/OGA1 SHEETS 04
05	VENDOR LIST FOR COMPONENTS	CE/416/ NTPC/RC/LIE-LIR /VL REV. 00 , SHEETS 03
06	TYPICAL QUALITY CHECK LIST	CE/416/LIE-LIR/QP REV 00, SHEETS 06

PROJECT: RATE CONTRACT FOR LIE/LIR

CUSTOMER: M/s NTPC & M/s DVC

CONSULTANT: M/s NTPC

COPY RIGHT AND CONFIDENTIAL

THE INFORMATION ON THIS DOCUMENT IS THE PROPERTY OF BHARAT HEAVY ELECTRICALS LIMITED. IT MUST NOT BE USED DIRECTLY OR INDIRECTLY IN ANY WAY DETRIMENTAL TO THE INTEREST OF THE COMPANY.

SCOPE OF SUPPLY
FOR
LOCAL INSTRUMENT ENCLOSURE / RACKS
(LIE / LIR)

REVISIONS :	APPROVED BY		
	AMITKUMAR SHARMA		
	PREPARED BY	ISSUED	DATE
	RAJESH LINGUTLA	416	21/09/26

COPY RIGHT AND CONFIDENTIAL

THE INFORMATION ON THIS DOCUMENT IS THE PROPERTY OF BHARAT HEAVY ELECTRICALS LIMITED . IT MUST NOT BE USED DIRECTLY OR INDIRECTLY IN ANY WAY DETRIMENTAL TO THE INTEREST OF THE COMPANY.

Scope of supply

The Scope of supply is as per Technical requirements attached with this specification. Vendor shall quote for each line item of the Table A & B . The unit rate shall be valid until the completion of the contracts. For this purpose, vendors shall maintain MS Excel file indicating total Bill of materials Table A&B.

TABLE: A

S.NO	HUP Ref CE/416/NTPC/RC /HUP	MATERIAL CODE	DESCRIPTION	TOTAL QUANTITY	UNIT
1		PR0830000020	LIE TYPEA	340	NO
2		PR0830000038	LIE TYPE B	341	NO
3		PR0830000046	LIE TYPE C	97	NO
4		PR0830000054	LIR TYPE A	86	NO
5		PR0830000062	LIR TYPE B	395	NO
6		PR0830000070	LIR TYPE C	340	NO
7	2	PR0830000313	HOOK UP SCHEME PT/PS 1/2" P91 9000CL	11	NO
8	4	PR0830000321	HOOK UP SCHEME DPT/DPS 1/2" P91 9000CL	11	NO
9	6	PR0820000523	HUP SCH PT/PS 1/2" A182F316H 6000CL	590	NO
10	8	PR0820000501	HUP SCH DPT/DPS 1/2" A182F316H 6000CL	260	NO
11	10	PR0830000402	HOOK UP SCHEME PT/PS 1/2" P22 6000CL	47	NO
12	12	PR0830000356	HOOK UP SCHEME DPT/DPS 1/2" P22 6000CL	47	NO
13	14	PR0830000100	Hook up PT/PS 6000 Steam and Water	395	NO
14	16	PR0830000119	HOOK UP DPT/FT/LT STEAM AND WATER A106 6K	215	NO
15	18	PR0830000127	Hook up PT/PS 3000 water	2758	NO
16	20	PR0830000135	Hook up DPT/DPS 3000 water	1560	NO
17	22	PR0830000305	Hook up PT/PS 3000 Sea Water 1/2" SS 316L	9	NO
18	24	PR0830000216	Hook up DPT/DPS Sea water SS316 L	9	NO
19	26	PR0830000151	Hook up PT/PS Clean air Top entry 3/4"	9	NO
20	28	PR0830000143	Hook up PT/PS Clean Air service	974	NO
21	30	PR0830000194	Hook up DPT/FT/DPS Flue gas	1048	NO
22	32	PR0830000003	Hook up for Air Purging	906	NO
23	32	PR0830000259	Hook up for Continuous Purging	2890	NO
24	32	PR0830000267	Hook up for Intermittent Purging	906	NO
25		PR0450000290	Temp. Transmitter Junction Box - Type A	880	NO
26		PR0450000303	Temp. Transmitter Junction Box - Type B	1040	NO
27		PR0450000311	Temp. Transmitter Junction Box - Type C	1232	NO
28		PR0900007443	Hardware for Loose Schemes as per Annexure-I	1	NO

Note:

1. **Colour and Painting:**
   Internal: Glossy white, two coats, or RAL 7035, with fire-resistant paint.
   External: RAL 7032 / RAL 7035.
   The **final colour shall be decided during detailed engineering**.
2. **IP Protection and Type Test:**
   IP55 type-test report shall be submitted for **LIE**, and **IP65 type-test report** shall be submitted for the **Junction Box (JB) of LIR** for approval. The submitted test reports shall **not be older than December 2022**.
3. The Vendor shall refer to and correlate the **Scope of Supply** with the applicable **Technical Specifications, Hook-up Schemes, Drawings, and other relevant project documents**.
4. The **tentative NTPC project list** is enclosed herewith as **Table-C**.
5. The **Instrument Schedule (Grouping Document)** shall be provided during detailed engineering.
6. The above quantities are **tentative** and are based on the current business scenario. In the event of any change in project requirements, **BHEL shall not be obligated to exhaust the indicated quantities**.
7. **BHEL reserves the right to increase the quantities by up to 25%** during the validity of the Rate Contract.

COPY RIGHT AND CONFIDENTIAL
THE INFORMATION ON THIS DOCUMENT IS THE PROPERTY OF BHARAT HEAVY ELECTRICALS LIMITED . IT MUST NOT BE USED DIRECTLY OR INDIRECTLY IN ANY WAY DETRIMENTAL TO THE INTEREST OF THE COMPANY

HARDWARE LOOSE SCHEMES- ANNEXURE-I

TABLE: B-1/2

SL. NO.	ITEM DESCRIPTION	QUANTITY	UNIT
1	TWO VALVE MANIFOLD WITH VENT PLUG PORT SIZE:1/2" NPTF/MATL.SS316 PR.TESTING:9000 PSI	10	NO
2	TWO VALVE MANIFOLD WITH VENT PLUG PORT SIZE:1/2" NPTF/MATL.SS316 PR.TESTING:6000 PSI	10	NO
3	TWO VALVE MANIFOLD WITH VENT PLUG PORT SIZE:1/2"NPTF/BODY:SS316 PR.TESTING:3000PSI	180	NO
4	FIVE VALVE MANIFOLD WITH VENT PLUG PORT SIZE:1/2" NPTF/MATL.SS316 PR.TESTING:9000 PSI	10	NO
5	FIVE VALVE MANIFOLD WITH VENT PLUG PORT SIZE:1/2" NPTF/MATL.SS316 PR.TESTING:6000 PSI	10	NO
6	FIVE VALVE MANIFOLD WITH VENT PLUG PORT SIZE:1/2" NPTF/MATL.SS316 PR.TESTING:3000 PSI	50	NO
7	THREE VALVE MANIFOLD WITH VENT PLUG PORT SIZE:1/2"NPTF MATL:SS316 PR.TESTING:3000PSI	10	NO
8	FORGED GLOBE VALVE BODY:ASTM A182 F316H/STEM:ASTM A182 GR.F6A/SIZE:1/2"NB-SW/CL:3000SPL	20	NO
9	FORGED GLOBE VALVE BODY:ASTM A182-F22/STEM:ASTM A182 GR.F6A/ SIZE:1/2"NBSW/CL:3000SPL	20	NO
10	FORGED GLOBE VALVE BODY:ASTM A182-F22/STEM:ASTM A182 GR.F6A/ SIZE:1/2"NBSW/CL:2500SPL	20	NO
11	FORGED GLOBE VALVE BODY:ASTM A105/STEM:ASTM A182 GR.F6A SIZE:1/2"NBSW/CL:3000	20	NO
12	FORGED GLOBE VALVE BODY:ASTM A105/STEM:ASTM A182 GR.F6A SIZE:1/2"NB-SW/CL:800	30	NO
13	FORGED GLOBE VALVE BODY:ASTM A182 F91/STEM:ASTM A182 GR.F6A/SIZE:1/2"NB-SW/CL:3000SPL	20	NO
14	TUBE FITTING TYPE:DFDC MATL:SS316 SIZE:1/2"NPTM X TO SUIT 1/2"OD SS TUBE	150	NO
15	TEE-TUBE UNION MATL: SS316 SIZE : OD OF 1/2" NB PIPE X TO SUIT 1/2" OD SS TUBE	20	NO
16	TEE-TUBE UNION MATL: SS316 SIZE : OD OF 3/4" NB PIPE X TO SUIT 1/2" OD SS TUBE	20	NO
17	PURGE ROTAMETER PROCESS CONN:1/4"NPTF AS PER SPECIFICATION	5	NO
18	AIR FILLTER REGULATOR PROCESS CONN:1/2"NPTF AS PER SPECIFICATION	5	NO
19	Bulk Head Union Material:Brass Size:1/4"NPTF	70	NO
20	Copper Tube in Coils-light brown Tempered:PVC Coated As per ASTM B 75 /: 1/4" OD X 1 MM Thick	200	NO
21	Brass Male Connector DFDC Size:1/4" to suit 1/4" Copper tube	200	NO
22	NIPPLE MAT: ASTM A106 Gr.B SIZE: 3/4" NB SCH 80 / LENGTH = 100 mm ONE END -3/4" NTPM ,OTHER END : PLAINCAP/ ASTM A 105 -SIZE - 3/4" NPTF	120	NO
23	SNUBBER MAT:A105 1/2" NPTM X 1/2" NPTF/FLOW DIR:- FROM 1/2" NPTF TO 1/2" NPTM/PRESSURE TESTING 3000 PSI"	30	NO
24	NUT & TAIL FITTING + SS 304 WASHERS (02 NOS.) MAT: A 105 / SIZE : ID=9 mm / OD=19 mm NUT: 3/4" BSPF	50	NO
25	FORGED ADAPTER MAT: ASTM A105 1/2" NPTM X 3/4" BSPM AS PER CL- 6000 ANSI B 16.11	50	NO
26	NUT & TAIL FITTING + SS 304 WASHERS (02 NOS.) MAT: A 105 / SIZE : ID=7 mm / OD=13 mm NUT: 1/2" BSPF	430	NO

Unit rate of each item for Mandatory Spare to be provided in the offer.

COPY RIGHT AND CONFIDENTIAL

THE INFORMATION ON THIS DOCUMENT IS THE PROPERTY OF BHARAT HEAVY ELECTRICALS LIMITED . IT MUST NOT BE USED DIRECTLY OR INDIRECTLY IN ANY WAY DETRIMENTAL TO THE INTEREST OF THE COMPANY.

HARDWARE LOOSE SCHEMES- ANNEXURE-I

TABLE: B-2/2

SL. NO.	ITEM DESCRIPTION	QUANTITY	UNIT
27	FORGED ADAPTER MAT: ASTM A105 1/2" NPTM X 1/2" BSPM CL - 3000 AS PER ANSI B 16.11	430	27
28	COUPLING MAT: ASTM A105 GALVANISED TO 10/15 MICRONS SIZE: 1/2" NPTF/ PR. TESTING: 800 PSI	1200	28
29	ELBOW MAT: ASTM A105 GALVANISED TO 10/15 MICRONS SIZE: 1/2" NPTF/ PR. TESTING: 800 PSI	700	29
30	EQUAL TEE MAT: ASTM A105 GALVANISED TO 10/15 MICRONSSIZE: 1/2" NPTF/ PR. TESTING: 800 PSI	150	30
31	COUPLING MAT: ASTM A105 GALVANISED TO 10/15 MICRONS SIZE: 1" NPTF/ PR. TESTING: 800 PSI	60	31
32	ELBOW MAT: ASTM A105 GALVANISED TO 10/15 MICRONS SIZE: 1" NPTF/ PR. TESTING: 800 PSI	35	32
33	EQUAL TEE MAT: ASTM A105 GALVANISED TO 10/15 MICRONS SIZE: 1" NPTF / PR. TESTING: 800 PSI	25	33
34	REDUCER MAT: ASTM A105 GALVANISED TO 10/15 MICRONS SIZE: 1" NPTF TO 1/2" NPTF/ PR. TESTING: 800 PSI	40	34
35	UNEQUAL TEE/MAT: ASTM A105 GALVANISED TO 10/15 MICRONS SIZE: 2 X 1" NPTF X 1/2" NPTF / PR. TESTING: 800 PSI	15	35
36	THREE PIECE UNION, MATL: ASTM A105/GALVANISED TO 10/15 MICRONS/SIZE: 1" NPTF, PRESSURE RATING: 800 PSI	15	36
37	THREE PIECE UNION, MATL: ASTM A105/GALVANISED TO 10/15 MICRONS/SIZE: 1/2" NPTF, PRESSURE RATING: 800 PSI.	290	37
38	GI PIPE-1/2" NB Heavy Grade as per IS 1239 standard, threaded ends (1/2" NPT) to be protected/Running length - 6mtrs	6000	38
39	GI PIPE-1" NB Heavy Grade as per IS 1239 standard, threaded ends (1" NPT) to be protected/Running length - 6mtrs	280	39
40	"Gate Valve Rating:ASA 150 LBS Body:ASTM/ B62 Trim:SS 304 Size:1/2"NPTF."	20	40
41	PIPE A106 GRB 2" NB SCH 40	30	41
42	U CLAMP - TO SUIT 1/2" NB PIPE WITH NUTS AND WASHERS MAT: CS, GALVANISED TO 10/15 MICRONS	7000	42
43	U CLAMP - TO SUIT 3/4" NB PIPE WITH NUTS AND WASHERS CS GALVANISED TO 10/15 MICRONS	2200	43
44	U CLAMP - TO SUIT 1" NB PIPE WITH NUTS AND WASHERS CS GALVANISED TO 10/15 MICRONS	300	44
45	U CLAMP - TO SUIT 2" NB PIPE WITH NUTS AND WASHERS CS GALVANISED TO 10/15 MICRONS	300	45
46	Funnel As per drawing ref:CE/416/FUNNEL	58	46
47	Flexible Hose SS Braided 1/2" OD x 1 Meter with clamps.One end with adopter of 1/2" NPTM and other end with Bras adopter of 1/2" NPTF Rating10 KG/CM2	100	47
48	Forged Coupling / As per ANSI B16.11 / Mat: ASTM A105 Size: 1/2" NB-SW / CLASS-3000	1000	48
49	Forged Coupling / As per ANSI B16.11 / Mat: ASTM A105 Size: 3/4" NB-SW / CLASS-3000	700	49
50	Forged Adaptor / As per ANSI B16.11 / Mat: ASTM A105 Size: 1/2"NPTM x 1/2" NB SW / CLASS-3000	50	50
51	Forged Unequal Tee / As per ANSI B16.11 / Mat: ASTM A105 Size: 2 x 3/4"NB-SW x 1/2" NPTF / CLASS-3000	220	51
52	Forged Expander / As per ANSI B16.11 / Mat: ASTM A105 Size: OD of 1/2" NB-PIPE to 3/4" NB SW / CLASS-3000	225	52
53	Forged Equal Tee / As Per ANSI B16.11 / Mat: ASTM A105 Size: 1/2" NB-SW / CLASS-3000	230	53

Unit rate of each item for Mandatory Spare to be provided in the offer.

COPY RIGHT AND CONFIDENTIAL
THE INFORMATION ON THIS DOCUMENT IS THE PROPERTY OF BHARAT HEAVY ELECTRICALS LIMITED . IT MUST NOT BE USED DIRECTLY OR INDIRECTLY IN ANY WAY DETRIMENTAL TO THE INTEREST OF THE COMPANY.

Table: C

List of Tentative NTPC Projects as below:

S.No	NTPC Project	Tentative Delivery Dates
1	NTPC LARA 2 X 800MW STPP Stage-II	Unit#1- 30.03.2027, Unit#2- 30.07.2027.
2	NTPC Singrauli 2 X 800MW STPP Stag-II	Unit#1- 30.12.2027, Unit#2- 30.01.2028
3	NTPC Talcher 2 X 660MW STPP FGD Package	Unit#1- 30.12.2027, Unit#2- 30.03.2028
4	NTPC Sipat 1 X 800MW STPP Stage-III	Unit#1- 30.12.2027, Unit#2- 30.03.2028
5	DVC Koderma 2 X 800MW STPP (NTPC CONSULTANT)	Unit#1- 30.12.2027, Unit#2- 30.03.2028
6	DVC Ragunathpur TG &SG 2 X 660MW STPP(NTPC CONSULTANT)	Unit#1- 30.03.2028, Unit#2- 30.06.2028

Project Wise tentative break up Quantity enclosed as Annexure-A.

Note: Please note that the **projects, quantities, and delivery schedules indicated are tentative** and are based on the current business scenario. In the event of any change in the **number of projects, quantities, or delivery schedules**, the same shall be accommodated by the bidder **without any additional cost or price implication to BHEL**.

ANNEXURE-A

				Quantity for various NTPC Projects							
S.NO	HUP Ref CE/416/NTPC/ RC /HUP	Material Code	Description	NTPC LARA 2 X 800MW STPP Stage-II	NTPC Singrauli 2 X 800MW STPP Stag-II	Talcher 2 X 660MW STPP FGD Package	NTPC Sipat 1 X 800MW STPP Stage-III	DVC Koderma 2 X 800MW STPP	DVC Ragunathpur TG &SG 2 X 660MW STPP	Total Quantity	Unit
1		PR0830000020	LIE TYPEA	80	80	0	40	80	60	340	NO
2		PR0830000038	LIE TYPE B	80	80	1	40	80	60	341	NO
3		PR0830000046	LIE TYPE C	20	20	11	10	20	16	97	NO
4		PR0830000054	LIR TYPE A	20	20	0	10	20	16	86	NO
5		PR0830000062	LIR TYPE B	90	90	0	45	90	80	395	NO
6		PR0830000070	LIR TYPE C	80	80	0	40	80	60	340	NO
7	2	PR0830000313	HOOK UP SCHEME PT/PS 1/2" P91 9000CL	2	2	2	1	2	2	11	NO
8	4	PR0830000321	HOOK UP SCHEME DPT/DPS 1/2" P91 9000CL	2	2	2	1	2	2	11	NO
9	6	PR0820000523	HUP SCH PT/PS 1/2" A182F316H 6000CL	140	140	0	70	140	100	590	NO
10	8	PR0820000501	HUP SCH DPT/DPS 1/2" A182F316H 6000CL	60	60	0	30	60	50	260	NO
11	10	PR0830000402	HOOK UP SCHEME PT/PS 1/2" P22 6000CL	10	10	2	5	10	10	47	NO
12	12	PR0830000356	HOOK UP SCHEME DPT/DPS 1/2" P22 6000CL	10	10	2	5	10	10	47	NO
13	14	PR0830000100	Hook up PT/PS 6000 Steam and Water	90	90	0	45	90	80	395	NO
14	16	PR0830000119	HOOK UP DPT/FT/LT STEAM AND WATER A106 6K	50	50	0	25	50	40	215	NO
15	18	PR0830000127	Hook up PT/PS 3000 water	640	640	18	320	640	500	2758	NO
16	20	PR0830000135	Hook up DPT/DPS 3000 water	360	360	0	180	360	300	1560	NO
17	22	PR0830000305	Hook up PT/PS 3000 Sea Water 1/2" SS 316L	2	2	0	1	2	2	9	NO
18	24	PR0830000216	Hook up DPT/DPS Sea water SS316 L	2	2	0	1	2	2	9	NO
19	26	PR0830000151	Hook up PT/PS Clean air Top entry 3/4"	2	2	0	1	2	2	9	NO
20	28	PR0830000143	Hook up PT/PS Clean Air service	220	220	24	110	220	180	974	NO
21	30	PR0830000194	Hook up DPT/FT/DPS Flue gas	240	240	8	120	240	200	1048	NO
22	32	PR0830000003	Hook up for Air Purging	200	200	26	100	200	180	906	NO
23	32	PR0830000259	Hook up for Continuous Purging	700	700	40	350	700	400	2890	NO
24	32	PR0830000267	Hook up for Intermittent Purging	200	200	26	100	200	180	906	NO
25		PR0450000290	Temp. Transmitter Junction Box - Type A	200	200	0	100	200	180	880	NO
26		PR0450000303	Temp. Transmitter Junction Box - Type B	240	240	0	120	240	200	1040	NO
		PR0450000311	Temp. Transmitter Junction Box - Type C	280	280	12	140	280	240	1232	NO
27		PR0900007443	Hardware for Loose Schemes as per Annexure-I	0	1	0	0	0	0	1	NO

PROJECT: RATE CONTRACT FOR LIE/LIR

CUSTOMER: M/s NTPC & M/s DVC

CONSULTANT: M/s NTPC

COPY RIGHT AND CONFIDENTIAL

THE INFORMATION ON THIS DOCUMENT IS THE PROPERTY OF BHARAT HEAVY ELECTRICALS LIMITED. IT MUST NOT BE USED DIRECTLY OR INDIRECTLY IN ANY WAY DETRIMENTAL TO THE INTEREST OF THE COMPANY.

TECHNICAL REQUIREMENT
FOR
LOCAL INSTRUMENT ENCLOSURE / RACKS
(LIE / LIR)

REVISIONS :	APPROVED BY		
	AMITKUMAR SHARMA		
	PREPARED BY	ISSUED	DATE
	RAJESH LINGUTLA	416	21/09/26

TECHNICAL REQUIREMENTS FOR TRANSMITTER ENCLOSURES AND TRANSMITTER RACKS:

I. TRANSMITTER ENCLOSURES:

1. The Transmitter enclosures (Closed type) are provided for mounting Transmitters etc. and located in Boiler area. This shall be constructed of **3** mm thick for C&I Package steel sheet material. These shall confirm to IP 55 protection class.

2. The Transmitter Enclosures shall be of following sizes (in millimeters).

   Type A – 1400(W) x 800(D) x 2200(H) (To Mount 5 or more transmitters)
   Type B - 1000(W) x 800(D) x 2200(H) (To Mount 3 to 4 transmitters)
   Type C - 700 (W) x 800(D) x 2200(H) (To Mount 1 to 2 transmitters)

3. These shall be reinforced as required to ensure true surfaces and to provide adequate Support for instruments and other equipment mounted therein. Double interlocking doors shall be provided and shall be arranged for maximum possible access to the module interior. Center posts or any member which would reduce access shall not be provided.

4. The doors shall be the three-point locking type constructed of not less than **3** mm steel sheet. Doors shall have concealed quick removal type pinned hinges and locking handles. Enclosure door locks shall accept the same / common key all over the plant. Gaskets shall be used between all mating sections to achieve dust proof enclosure rating for the modules and waterproof and dust tight rating on the Terminal / Junction boxes. All enclosures shall have access doors on Front and Rear sides.

5. Internal wirings between the Transmitters and Terminal / Junction box shall run through flexible dust tight conduits.

6. Anti Vibration Pads of minimum 15 mm thickness shall be provided for supporting each enclosure.

7. Construction of same shall be typically as per enclosed drawing **CE/416/LIE/LIR/OGA2.**

8. Service Power and Lighting

Each enclosure shall be provided with one receptacle, one light fixture with wire guard and one lighting switch and suitable MCBs. Lighting switches may be doors actuated, mounted door. Light switches and receptacles shall be installed inside the enclosure on the wall near the latch side of the enclosure door. Light fixtures shall be installed on the ceilings of the enclosures. Power supplies for miscellaneous devices shall be provided with fuses located within the Enclosure JB. Fuses shall be mounted in fuse blocks. Fuse ratings will be given on electrical schematic diagrams. Power supply shall be 240 V AC.

9. Equipment Installation

a. Enclosures shall be provided to mount field instrument, equipment and accessories. Vendor shall prepare enclosures and piping drawings indicating the layout for each enclosure. Special attention shall be given in the piping layout to avoid air traps in liquid filled piping, or water pockets in piping intended to be dry.

b. Drawings shall indicate the arrangement of all Piping, Valves and Fittings within the enclosures.

10. **Impulse Piping /Tubing**

a. Transmitter enclosures shall be complete with impulse tubing piping, valves from enclosure bulkhead connection to all instruments and necessary drain / blow down connections. The type, sizes, material and pressure class of pipes/tubes, fittings, valves etc. shall be suitable for the intended applications as per the Schemes / Tagging list of Instrument, provided by BHEL.

b. Bulkhead connection shall be used when instrument piping/ tubing enters the enclosure through Bulkhead plate. Typically through Bulk heads, Impulse pipe entry shall be through Top side of the Enclosure for Steam and Liquid services and for Air / flue gas services, impulse pipe entry shall be from Bottom side.

c. All Instrument Blow down lines, except those measuring vacuum shall be connected to a two-inch header, which is extended through one end of the enclosure and turned downward at other end.

d. Instrument piping and tubing shall be hydrostatically tested at one and one-half times the maximum Design pressure(As per instrument schedule provided during the detailed engineering) for that instrument except for low pressure (below Design Pressure 5.34Kg/Cm2) and vacuum measurement the test pressure will be 8 Kg / Cm2.

11. For Purging :

a. Pneumatic tubing shall be installed for all pneumatic devices, such as Air filter Regulator, Purge rotameters, Isolation valves, distribution air-header etc. Pneumatic tubing shall be installed in a neat workmanlike manner in protected locations with suitable supports. All Pipes / Tubes, which enter or leave the enclosure, shall be terminated on bulkhead fittings in the bulkhead plate. Pneumatic tubing material shall be ½" OD SS316 tubing Flareless SS- Tube fittings shall be used for tubing connections.

b. Instrument tubing schematic, connection and interconnections diagrams shall be furnished.

12. Wiring Within Enclosures and Grounding

Vendor shall furnish general arrangement and wiring diagrams for each transmitter Enclosures for approval.

13. **Enclosure Electrical Junction Box**

a. IP 55 junction box for the termination of all internal wiring shall be provided for each transmitter enclosure.

b. Junction boxes for enclosures shall be located inside the Enclosure on one end of each enclosure assembly to accept field wiring through the bottom of the junction box. The Junction box shall be 800 x 200 x200 mm minimum dimension. A hinged door shall give on side access to the interior of the junction box. Same key shall be used to lock both Junction box. Tb shall be in multiple of 12 nos.

II. OPEN TYPE TRANSMITTER RACKS:

1. Transmitter racks is provided for mounting transmitters and other accessories, in buildings and closed areas like the power house building / turbine hall.

2. The Transmitter Racks shall be of following sizes (in millimeters).

   Type A- 1650(W) x 800(D) x 2200(H) (To mount 7 to 8 transmitters)
   Type B- 1330(W) x 800(D) x 2200(H) (To mount 5 to 6 transmitters)
   Type C- 1010(W) x 800(D) x 2200(H) (To Mount 1 to 4 transmitters)

3. Racks shall be constructed on structural members of adequate strength and rigidity to ensure proper support to the mounted instruments and equipment. Racks shall be of welded construction. Each rack shall be provided with a canopy thickness not less than **3mm** to protect the instrument from dripping water or falling objects.

4. All Valves & Manifolds shall be securely mounted and the structural design shall be such that no item shall interfere with maintenance and removal of instrument, equipment and their accessories.

5. Construction of same shall be typically as per enclosed drawing **CE/416/LIE/LIR/OGA2**

6. Service Power and Lighting

a. Each rack shall be provided with one receptacle, one light fixture with wire guard and one lighting switch. Light fixtures shall be installed on the canopy of the rack.

b. Power supplies for miscellaneous devices shall be provided with fuses located within the rack JB. Fuses shall be mounted in fuse blocks. Fuse ratings will be given on electrical schematic diagrams. Power supply shall be 240 V AC.

7. Equipment Installation

Vendor shall prepare rack fabrication and piping drawings indicating the layout of each Rack. Transmitter/Instruments shall be installed using custom fabricated supports which are attached to the vertical members provided for this purpose. Drawings shall indicate the arrangement of all equipment, piping, valves and fittings within the rack and shall be subject to approval.

8. Impulse Piping / Tubing

a. Transmitter racks shall be complete with impulse tubing piping, valves from enclosure bulkhead connection to all instruments and necessary drain / blow down connections. The type, sizes, material and pressure class of pipes/tubes, fittings, valves etc. shall be suitable for the intended applications as per the Schemes / Tagging list of Instrument, provided by BHEL.
b. Bulkhead connection shall be used when instrument piping/ tubing enters the enclosure through Bulkhead plate. Typically through Bulk heads, Impulse pipe entry shall be through top side of the Enclosure for Steam and Liquid services.

c. All Instrument Blow down lines, except those measuring vacuum shall be connected to a two-inch header, which is extended through one end of the enclosure and turned downward for directing the blow down into drain.

d. Instrument piping and tubing shall be hydrostatically tested at one and one-half times the maximum Design Pressure(As per Instrument schedule provided during detailed engineering for each project) for that instrument except for low pressure(Design Pressure below 5.34Kg/Cm2) and vacuum measurement the test pressure will be 8 Kg / Cm2.

9. Wiring of the Racks

a. A fully enclosed IP 65 type junction box shall be provided in each rack for housing the terminal blocks, power supply fuses and other electrical accessories, as required.

b. All electrical connections between instrument and the Terminals in Junction box shall be made. In addition all utility wiring for lighting and service power shall be installed.

c. Vendor shall furnish general arrangement and wiring diagrams for each transmitter rack for approval.

d. **Junction Boxes**

Junction boxes (JBs) for the racks shall be mounted at one end of each assembly and shall be located **inside the rack**. The JBs shall be suitable for accepting field wiring through the **bottom entry**.
The junction box shall have a **minimum depth of 200 mm**. A **removable, bolted door** shall be provided for access to the interior of the junction box. All junction boxes shall be provided with a **common key**.
The JB shall be of **FRP, 4 mm thick**, with **IP65 protection class**. The door handle shall be of **SS**, self-locking type, with a common key. The door shall be provided with a **synthetic rubber gasket**.
An **M6 earthing stud** shall be provided for safety grounding. Terminal blocks (TBs) shall be provided in **multiples of 12 terminals**.
Note: The final selection of **Metal JB or FRP JB** shall be decided by BHEL during detailed engineering, **without any price implication** to BHEL.

III. General Requirement applicable to Transmitter Enclosures & Racks :

1. Surface preparation And Painting

a. All sheet metal / exterior steel surfaces shall rust free and scale free and all other residue during fabrication operation such as Oil, grease and salts etc. shall be removed by one or more solvent cleaning methods. Epoxy primer surface shall be applied to all exterior and interior surfaces. Epoxy paint shall be applied to all surfaces and the paint thickness shall be 100 to150 microns. The finish colours for exterior and interior surfaces shall conform to the shades mentioned in scope of supply.

1. Grounding

a. Enclosures and Racks shall be provided with a continuous tinned copper ground bus of minimum 25 mm X 6 mm cross section, extended along the entire length. The ground bus shall have two (2) bolts drilling with GI bolts and nuts at each end.

2. Name plate / Label.

a. Service details and Tag no. shall be engraved on a nameplate or label for each of the Transmitter. These Nameplates or Labels shall be of white non-hygroscopic material with engraved black lettering. This shall be fixed on to the Impulse Pipe closer to the Transimitter inside the Enclosure / Rack.

3. Wiring Details

a. Interconnecting wiring shall be provided between all electrical devices mounted in the panels and between the devices and terminal blocks if the devices are to be connected to equipment outside the panels by cabling. All interior wiring shall be installed neatly and carefully and shall be terminated at suitable terminal blocks in the Junction box. Sufficient clearance shall be provided for all control and instrumentation leads.

b. Each wire shall be identified at both ends with wire designations as per approved wiring diagram. Interlocking type ferrules shall be used for identification.

c. All wire termination shall be made with insulated sleeve and cage clamp type terminals.

d. All signal wiring shall be done with 2 pair, 0.5 sq. mm annealed tinned copper, pair twisted overall & shielded , voltage grade 225 V , unarmored FRLS PVC sheathed cable and 4 pair, 0.5 sq. mm for PS/DPS. Power wiring shall be with 1.5 sq mm, 1100V.

e. Wires shall be dressed and run in trays or troughs with clamp-on type covers. Wiring may be neatly bunched in-groups by non-metallic cleats or bands. Shield wires shall be terminated on separate terminal blocks.

f. Internal wiring shall follow distinct color coding to segregate different voltage levels viz. 24V DC & 230V AC

g. Junction Box of enclosures will be provided with removable, gasketted cable gland for cable entrance.

4. Fuse Blocks

a. Fuse blocks shall be modular type with bakelite frame and reinforced retaining clips.

5. Terminal Blocks

a. Terminal blocks shall be DIN rail mounted and shall have Cage clamp type connection which shall be maintained for all panels uniformly.

b. The rated cross section of the terminal blocks shall be suitable for connecting 0.5-mm²/2.5 mm². Conductor of suitable voltage grade as specified.

c. Terminal blocks shall be mounted vertically with adequate spacing between rows for routing the cable troughs and to allow adequate free workspace for termination and removal of wires.

d. Terminal blocks shall be provided with white marking strips/self adhesive marker cards.

e. For all instruments one set of spare terminals to be provided below the main terminals.

f. Terminal blocks for termination of electrical power supply shall be type WAGO / PHOENIX make of suitable size with marking strips.

g. The last terminal in a rail-mounted assembly shall be closed with an end plate and end bracket.

h. Terminal blocks shall be provided with multiples of 12 for each Enclosure/Rack.

IV. Documents to be Submitted by Vendor for Approval :

1. OGA for Transmitter Enclosure and Racks.

2. Layout of Components in each of Transmitter Enclosure and Rack.

3. Electrical diagrams for each Transmitter Enclosure and Rack.

4. Component datasheets

5. Quality plan including Welding Procedure specification and Welder Procedure qualification Record. This will be approved by BHEL / (END USER)

6. The quality plan shall include Visual inspection, GA BOM/Layout features verification, Dimensions, Paint shade, thickness measurement, Alignment of sections, component ratings, Wiring, IR, HV, review of TC for instruments / Devices, Accessibility of TBs / Devices, Illumination, Tubing and Degree of protection (Review of type test certificate)

V. Specific requirements

a. Where grouping details are not provided for any instrument, the grouping shall be **finalized and indicated by BHEL during detailed engineering**.

b. SS tubing between the valve manifold and transmitter for each service shall be supplied as per the transmitter model numbers and mounting details provided by BHEL EDN.In case the transmitter model numbers and mounting details are not received from BHEL EDN prior to dispatch, the Vendor shall supply the required SS tubing and tube connectors during commissioning, as per the instructions of BHEL EDN, at no additional cost to BHEL.

c. LIE/LIR/TTE shall be packed in sturdy wooden boxes and covered with tarpaulin sheets to prevent the ingress of water during storage and transportation. Adequate lifting arrangements shall be provided to ensure safe handling and lifting of the packages. In case of any damage to the wooden packing and/or LIE/LIR/TTEs observed at site during transportation, unloading, or handling, the Vendor shall repair or replace the damaged packing and/or LIE/LIR/TTEs at no additional cost to BHEL.**LIE/LIR/TTE LED bulbs shall be packed separately and handed over to the site along with the respective equipment.**

d. BHEL/End customer reserves the right to inspect the item ordered at any stage at vendor's works and if found not meeting the stipulated conditions, material is liable for rejection.

TECHNICAL REQUIREMENTS FOR TEMPERATURE TRANSMITTER ENCLOSURE/JUNCTION BOX:

1. The Junction Box is provided for mounting Pipe Mounted Temperature Transmitters. This shall be constructed of 1.6 mm thick steel sheet material. These shall confirm to IP 55 protection class.

2. The Junction Box/Enclosure shall be of following sizes (in millimeters).

   Type A – 800(W) x 500(D) x 1100(H) (Shall have Four rows of 2" pipe & 180 terminals)
   Type B - 800(W) x 500(D) x 900(H) (Shall have Three rows of 2" pipe & 150 terminals)
   Type C - 800(W) x 500(D) x 600(H) (Shall have Two rows of 2" pipe & 60 terminals)

3. These shall be reinforced as required to ensure true surfaces and to provide adequate support for instruments and other equipment mounted therein. Doors shall be provided and shall be arranged for maximum possible access to from front and back side of enclosures (as applicable) the module interior. Center posts or any member which would reduce access shall not be provided.

4. The doors shall be the three-point locking type constructed of not less than 1.6 mm steel sheet. Doors shall have concealed quick removal type pinned hinges and locking handles. Junction Box door locks shall accept the same / common key all over the plant. Gaskets shall be used between all mating sections to achieve dust proof enclosure rating. All Junction Box shall have access doors on Front side and back side.

5. All the junction boxes shall be suitable for mounting on walls, columns, structures, free standing type etc. The brackets, nuts, bolts, screws, gland and lugs required for erection are in supplier's scope.

6. Vendor shall furnish general arrangement diagrams for each type of transmitter Junction Box for approval.

7. Surface preparation and Painting

   b. All sheet metal / exterior steel surfaces shall rust free and scale free and all other residue during fabrication operation such as Oil, grease and salts etc. shall be removed by one or more solvent cleaning methods. Epoxy primer surface shall be applied to all exterior and interior surfaces. Epoxy paint shall be applied to all surfaces and the paint thickness shall be 100 to150 microns. The finish colours for exterior and interior surfaces shall conform to the shades mentioned in scope of supply.

8. **Terminal Blocks**

   a. Terminal blocks shall be DIN rail mounted and shall have Cage clamp type connection which shall be maintained for all panels uniformly.

b. The rated cross section of the terminal blocks shall be suitable for connecting 0.5-mm^2/2.5 mm^2. Conductor of suitable voltage grade as specified.

c. Terminal blocks shall be mounted vertically with adequate spacing between rows for routing the cable troughs and to allow adequate free workspace for termination and removal of wires.

d. Terminal blocks shall be provided with white marking strips/self adhesive marker cards.

e. Terminal blocks for termination of electrical power supply shall be type WAGO / PHOENIX make of suitable size with marking strips.

f. The last terminal in a rail-mounted assembly shall be closed with an end plate and end bracket.

9. <u>Documents to be Submitted by Vendor for Approval:</u>

a. OGA for Junction Box.

b. Layout of Transmitter in each Type of Junction Box.

c. Quality plan. This will be approved by BHEL / (END USER)

d. The quality plan shall include Visual inspection, GA BOM/Layout features verification, Dimensions, Paint shade, thickness measurement, IR, HV, Accessibility of TBs / Devices, Degree of protection (Review of type test certificate)

COPY RIGHT AND CONFIDENTIAL

THE INFORMATION ON THIS DOCUMENT IS THE PROPERTY OF BHARAT HEAVY ELECTRICALS LIMITED. IT MUST NOT BE USED DIRECTLY OR INDIRECTLY IN ANY WAY DETRIMENTAL TO THE INTEREST OF THE COMPANY.

PROJECT: RATE CONTRACT FOR LIE/LIR

CUSTOMER: M/s NTPC & M/s DVC

CONSULTANT: M/s NTPC

HOOK UP SCHEMES

REVISIONS :

APPROVED BY		
AMITKUMAR SHARMA		
PREPARED BY	ISSUED	DATE
RAJESH LINGUTLA	416	21/09/26

REVISION NO	DATE	COPY RIGHT AND CONFIDENTIAL The information on this document is the property of Bharat Heavy Electricals Limited. It must not be used directly or indirectly in anyway detrimental to the interest to the Company.

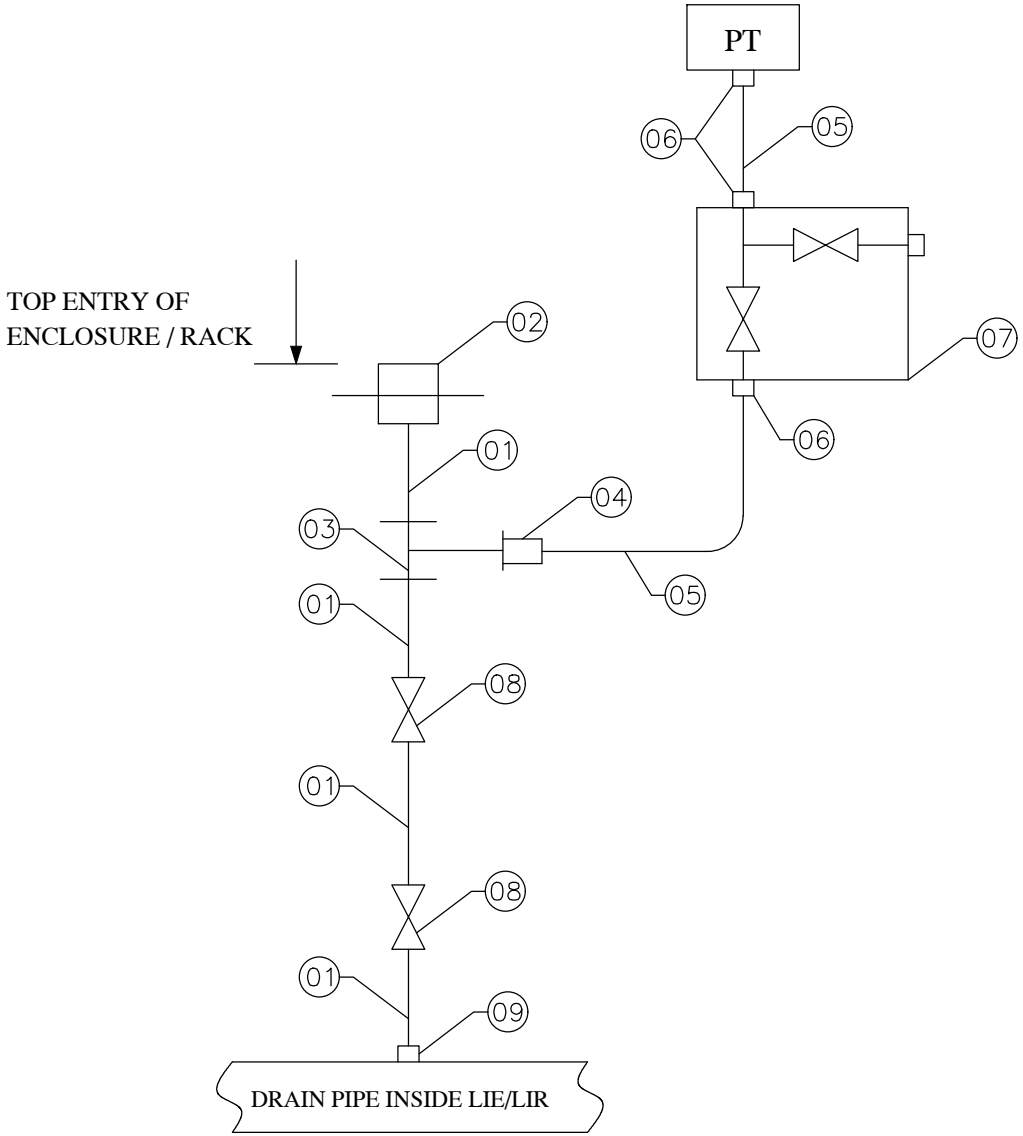

NOTES:

1. " TRANSMITTER BELOW SOURCE"
2. FOR BILL OF MATERIAL REFER PAGE 03 OF 33

A4 - 11

CE/416/NTPC/RC/HUP

REV. NO: 00

PAGE: 02 OF 33

ITEM NO.	ITEM DESCRIPTION	QTY/INST.
01	IMPULSE PIPE MATL: ASTM A335 P91 SIZE: 1/2" NB-SCH XXS	A/R
02	BULKHEAD UNION / COUPLING / AS PER ANSI B16.11 MATL: ASTM A182 F91 SIZE: 1/2" NB-SW / CL 9000	01
03	FORGED EQUAL TEE / AS PER ANSI B16.11 MATL: ASTM A182 F91 SIZE: 1/2" NB-SW / CL 9000	01
04	TEE-TUBE UNION MATL: SS316 SIZE: OD OF 1/2" NB-PIPE x TO SUIT 1/2" OD SS TUBE	01
05	TUBE MATL: A213 TP316H SIZE: 1/2" OD x 2.1mm THK.	A/R
06	TUBE FITTING: DFDC MATL: SS316 SIZE: 1/2" NPTM x TO SUIT 1/2" OD SS TUBE	03
07	TWO VALVE MANIFOLD WITH VENT PLUG BODY: SS316 PORT SIZE: 1/2" NPTF / RATING: 9000 PSI	01
08	FORGED GLOBE VALVE BODY: ASTM A182 F91 / STEM MATL: A182 Gr F6a SIZE: 1/2" NB-SW / CL 3000 SPL	02
09	HALF COUPLING / AS PER ANSI B16.11 MATL: ASTM A182 F91 SIZE: 1/2" NB-SW / CL 9000	01

COPY RIGHT AND CONFIDENTIAL
The information on this document is the property of Bharat Heavy Electricals Limited.
It must not be used directly or indirectly in anyway detrimental to the interest to the Company.

DATE

REVISION NO

REVISION NO	DATE	COPY RIGHT AND CONFIDENTIAL The information on this document is the property of Bharat Heavy Electricals Limited. It must not be used directly or indirectly in anyway detrimental to the interest to the Company.		

A4 - 11

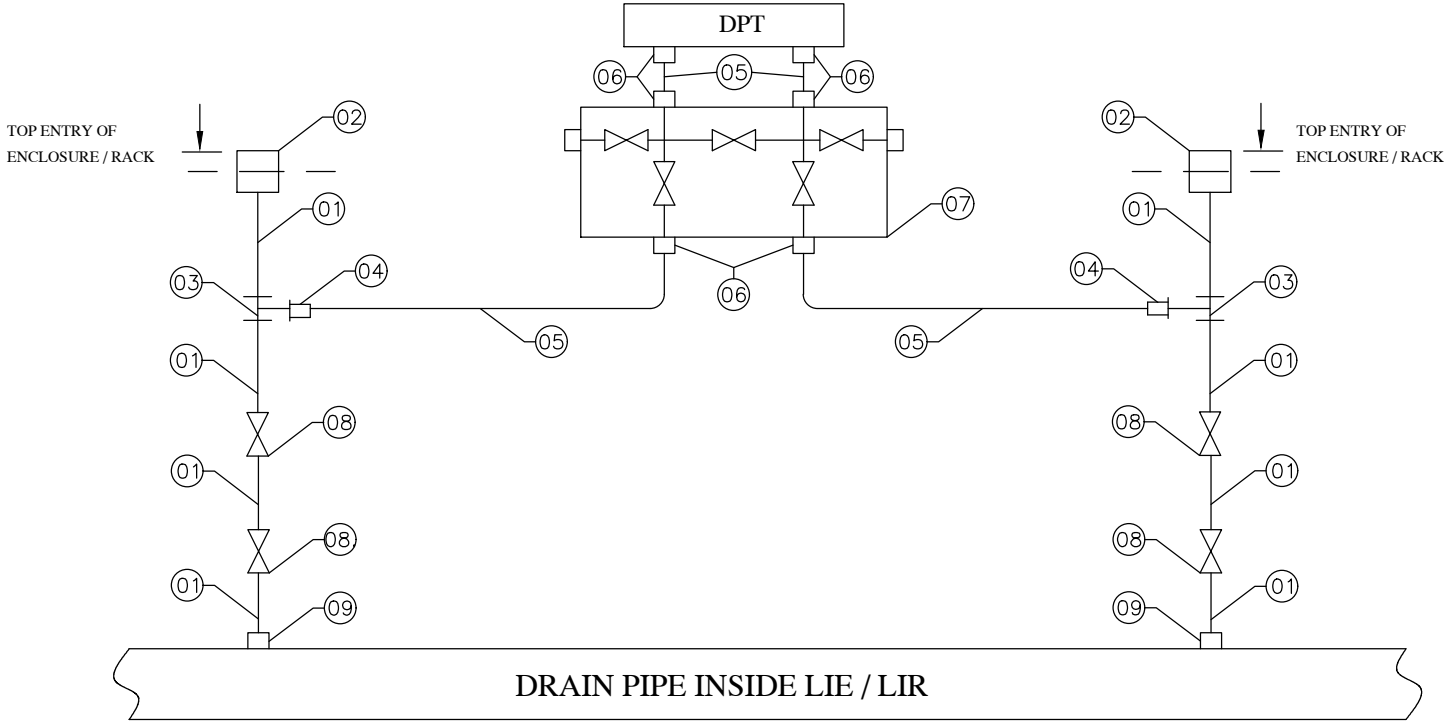

NOTE:

1. " TRANSMITTER BELOW SOURCE"
2. FOR BILL OF MATERIAL REFER PAGE 05 OF 33

CE/416/NTPC/RC/HUP

REV. NO: 00

PAGE: 04 OF 33

ITEM NO.	ITEM DESCRIPTION	QTY/INST.
01	IMPULSE PIPE MATL: ASTM A335 P91 SIZE: 1/2" NB-SCH XXS	A/R
02	BULKHEAD UNION / COUPLING / AS PER ANSI B16.11 MATL: ASTM A182 F91 SIZE: 1/2" NB-SW / CL 9000	02
03	FORGED EQUAL TEE / AS PER ANSI B16.11 MATL: ASTM A182 F91 SIZE: 1/2" NB-SW / CL 9000	02
04	TEE-TUBE UNION MATL: SS316 SIZE: OD OF 1/2" NB-PIPE x TO SUIT 1/2" OD SS TUBE	02
05	TUBE MATL: A213 TP316H SIZE: 1/2" OD x 2.1mm THK.	A/R
06	TUBE FITTING: DFDC MATL: SS316 SIZE: 1/2" NPTM x TO SUIT 1/2" OD SS TUBE	06
07	FIVE VALVE MANIFOLD WITH VENT PLUG BODY: SS316 PORT SIZE: 1/2" NPTF / RATING: 9000 PSI	01
08	FORGED GLOBE VALVE BODY: ASTM A182 F91 / STEM MATL: A182 Gr F6a SIZE: 1/2" NB-SW / CL 3000 SPL	04
09	HALF COUPLING / AS PER ANSI B16.11 MATL: ASTM A182 F91 SIZE: 1/2" NB-SW / CL 9000	02

COPY RIGHT AND CONFIDENTIAL
The information on this document is the property of Bharat Heavy Electricals Limited.
It must not be used directly or indirectly in anyway detrimental to the interest to the Company.

DATE

REVISION NO

REVISION NO	DATE

COPY RIGHT AND CONFIDENTIAL

The information on this document is the property of Bharat Heavy Electricals Limited.
It must not be used directly or indirectly in anyway detrimental to the interest to the Company.

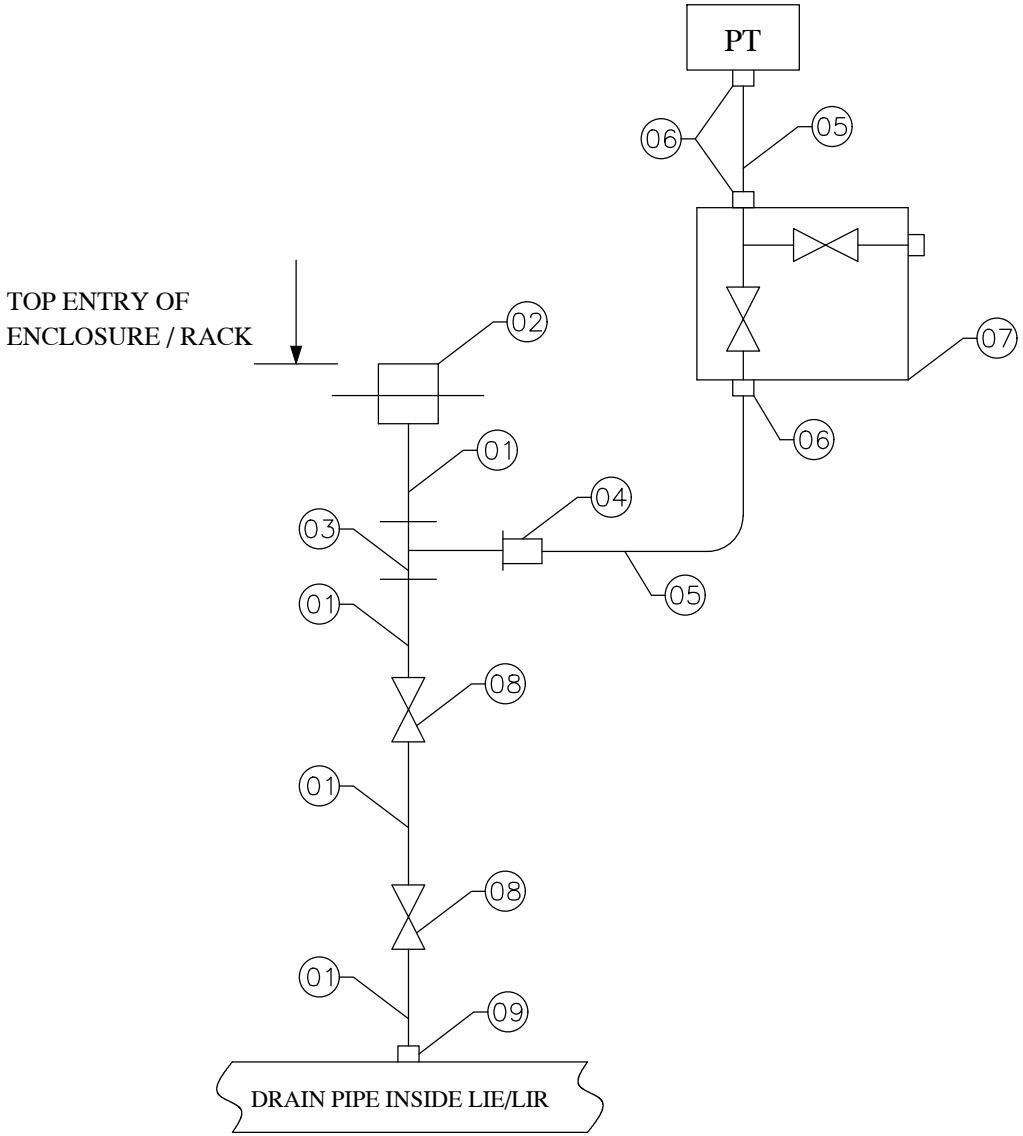

NOTES:

01. "TRANSMITTER BELOW SOURCE"
02. FOR BILL OF MATERIAL REFER PAGE 07 OF 33

CE/416/NTPC/RC/HUP

REV. NO: 00

ITEM NO.	ITEM DESCRIPTION	QTY / INST. (Nos.)
01	SEAMLESS PIPE MATL: ASTM 213 TP316H SIZE: 1/2" NB-SCH 160	A/R
02	BULKHEAD UNION / COUPLING /AS PER ANSI B16.11 MATL: ASTM A182 F316H SIZE: 1/2" NB-SW / CL 6000 LBS	01
03	FORGED EQUAL TEE / AS PER ANSI B16.11 MATL: ASTM A182 F316H SIZE: 1/2" NB-SW / CL 6000	01
04	TEE-TUBE UNION MATL: SS316 SIZE: 1/2" NPTM x TO SUIT 1/2" OD SS TUBE	01
05	SEAMLESS TUBE MATL: A213 TP316H SIZE: 1/2" OD x 2.1mm THK.	A/R
06	TUBE FITTING / DFDC MATL: SS316 SIZE: 1/2" NPTM x TO SUIT 1/2" OD SS TUBE	03
07	TWO VALVE MANIFOLD WITH DRAIN PLUG MATL: SS316 PORT SIZE: 1/2" NPTF / PR. TESTING: 9000PSI	01
08	FORGED GLOBE VALVE BODY: ASTM A182 F316H / STEM MATL: A182 Gr F6a SIZE: 1/2" NB-SW / CL 3000SPL	02
09	HALF COUPLING / AS PER ANSI B16.11 MATL: ASTM A182 F316H SIZE: 1/2" NB-SW / CL 6000	01

COPY RIGHT AND CONFIDENTIAL
The information on this document is the property of Bharat Heavy Electricals Limited.
It must not be used directly or indirectly in anyway detrimental to the interest to the Company.

DATE

REVISION NO

REVISION NO	DATE	COPY RIGHT AND CONFIDENTIAL The information on this document is the property of Bharat Heavy Electricals Limited. It must not be used directly or indirectly in anyway detrimental to the interest to the Company.

A4 - 11

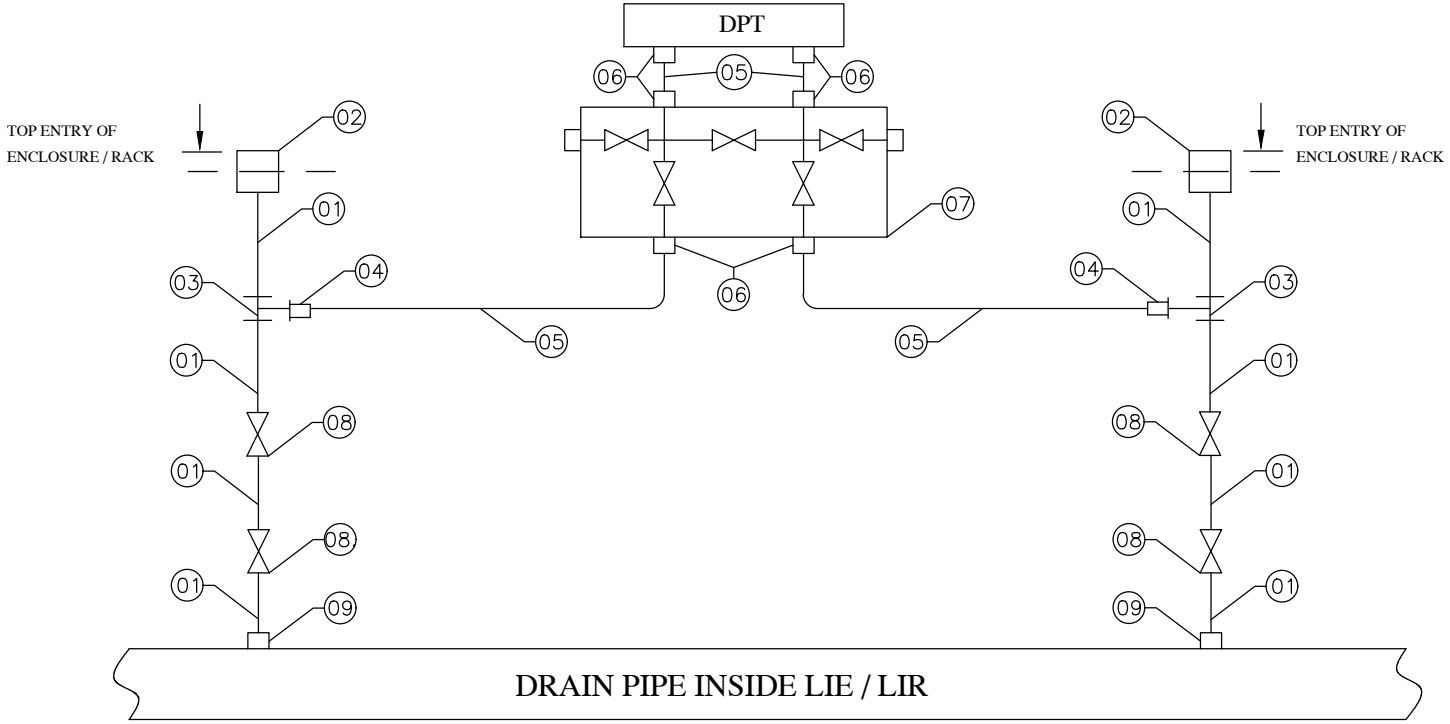

NOTE:

1. " TRANSMITTER BELOW SOURCE"
2. FOR BILL OF MATERIAL REFER PAGE 09 OF 33

CE/416/NTPC/RC/HUP

REV. NO: 00

PAGE: 08 OF 33

ITEM NO.	ITEM DESCRIPTION	QTY / INST. (Nos.)
01	SEAMLESS PIPE MATL: ASTM 213 TP316H SIZE: 1/2" NB-SCH 160	A/R
02	BULKHEAD UNION / COUPLING /AS PER ANSI B16.11 MATL: ASTM A182 F316H SIZE: 1/2" NB-SW / CL 6000 LBS	02
03	FORGED EQUAL TEE / AS PER ANSI B16.11 MATL: ASTM A182 F316H SIZE: 1/2" NB-SW / CL 6000	02
04	TEE-TUBE UNION MATL: SS316 SIZE: 1/2" NPTM x TO SUIT 1/2" OD SS TUBE	02
05	SEAMLESS TUBE MATL: A213 TP316H SIZE: 1/2" OD x 2.1mm THK.	A/R
06	TUBE FITTING / DFDC MATL: SS316 SIZE: 1/2" NPTM x TO SUIT 1/2" OD SS TUBE	06
07	FIVE VALVE MANIFOLD WITH DRAIN PLUG MATL: SS316 PORT SIZE: 1/2" NPTF / PR. TESTING: 9000 PSI	01
08	FORGED GLOBE VALVE BODY: ASTM A182 F316H / STEM MATL: A182 Gr F6a SIZE: 1/2" NB-SW / CL 3000 SPL	02
09	HALF COUPLING / AS PER ANSI B16.11 MATL: ASTM A182 F316H SIZE: 1/2" NB-SW / CL 6000	02

COPY RIGHT AND CONFIDENTIAL
The information on this document is the property of Bharat Heavy Electricals Limited.
It must not be used directly or indirectly in anyway detrimental to the interest to the Company.

DATE

REVISION NO

REVISION NO	DATE

COPY RIGHT AND CONFIDENTIAL

The information on this document is the property of Bharat Heavy Electricals Limited.

It must not be used directly or indirectly in anyway detrimental to the interest to the Company.

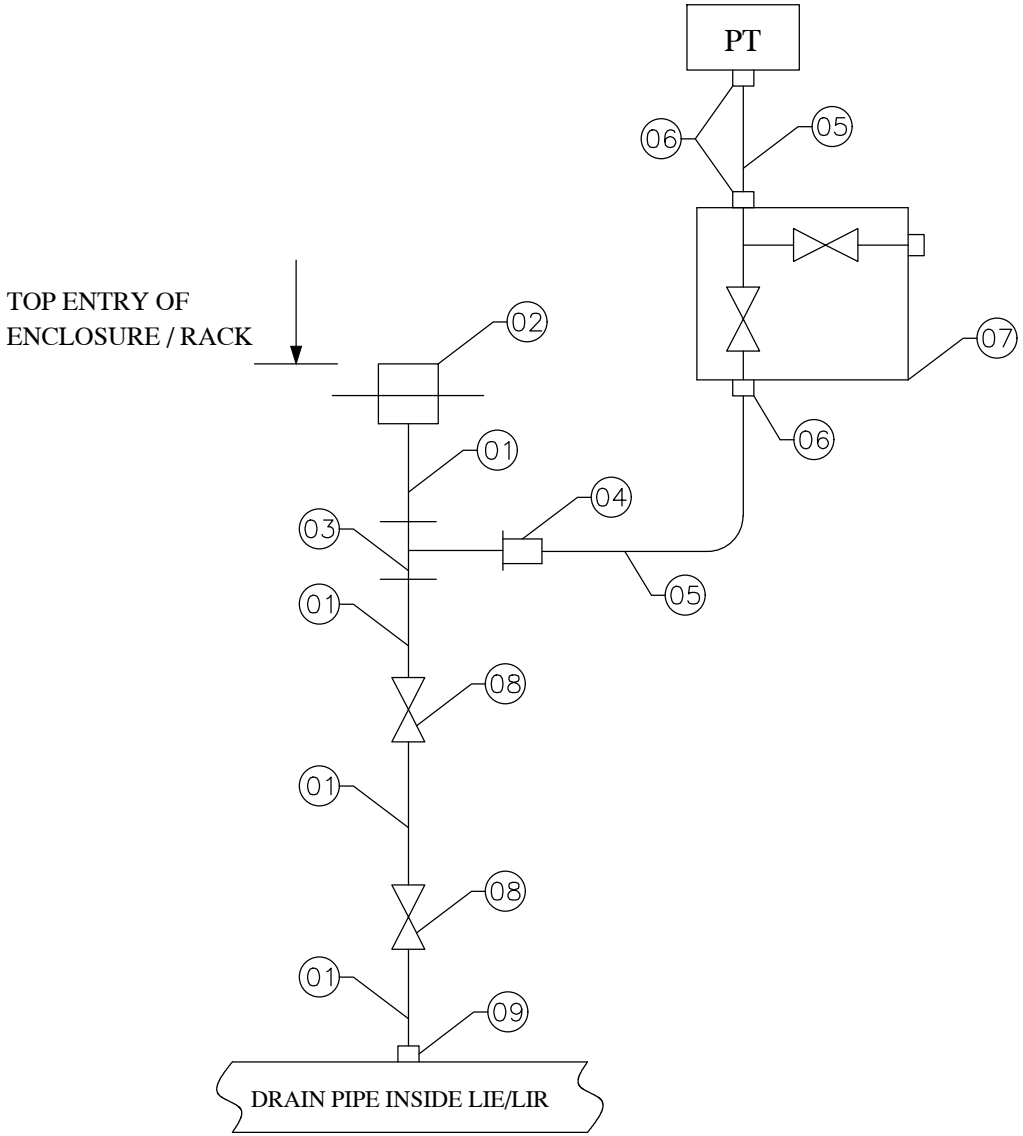

NOTES:

01. "TRANSMITTER BELOW SOURCE"

02. FOR BILL OF MATERIAL REFER PAGE 11 OF 33

CE/416/NTPC/RC/HUP

REV. NO: 00

ITEM NO.	ITEM DESCRIPTION	QTY/INST. (Nos.)
01	IMPULSE PIPE MATL: ASTM A335 P22 SIZE: 1/2" NB-SCH 160	A/R
02	BULKHEAD UNION/COUPLING / AS PER ANSI B16.11 MATL: ASTM A182 F22 SIZE: 1/2" NB-SW / CL 6000	01
03	FORGED EQUAL TEE / AS PER ANSI B16.11 MATL: ASTM A182 F22 SIZE: 1/2" NB-SW / CL 6000	01
04	TEE-TUBE UNION MATL: SS316 SIZE: OD OF 1/2" NB x TO SUIT 1/2" OD SS TUBE	01
05	TUBE MATL: A213 TP316H SIZE: 1/2" OD x 2.1mm THK.	A/R
06	TUBE FITTING / DFDC MATL: SS316 SIZE: 1/2" NPTM x TO SUIT 1/2" OD SS TUBE	03
07	TWO VALVE MANIFOLD WITH VENT PLUG MATL: SS316 PORT SIZE: 1/2" NPTF / PR. TESTING: 6000 PSI	01
08	FORGED GLOBE VALVES BODY: ASTM A182 F22 / STEM MATL: A182 Gr F6a SIZE: 1/2" NB-SW / CL 3000 SPL	02
09	HALF COUPLING / ASPER ANSI B16.11 MATL: ASTM A182 F22 SIZE:1/2" NB-SW / CL 6000	01

COPY RIGHT AND CONFIDENTIAL
The information on this document is the property of Bharat Heavy Electricals Limited.
It must not be used directly or indirectly in anyway detrimental to the interest to the Company.

DATE

REVISION NO

REVISION NO	DATE	COPY RIGHT AND CONFIDENTIAL The information on this document is the property of Bharat Heavy Electricals Limited. It must not be used directly or indirectly in anyway detrimental to the interest to the Company.

A4 - 11

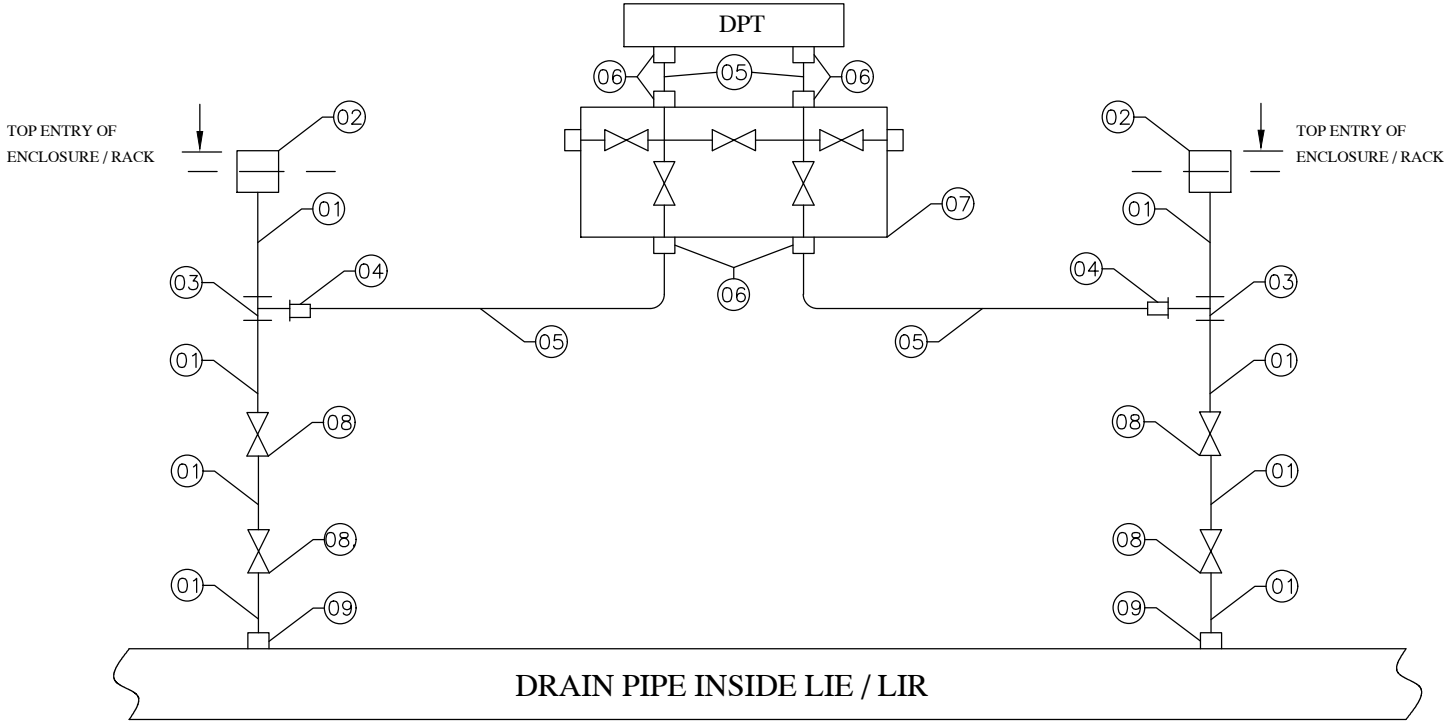

NOTE:

1. " TRANSMITTER BELOW SOURCE"
2. FOR BILL OF MATERIAL REFER PAGE 13 OF 33

CE/416/NTPC/RC/HUP

REV. NO: 00

PAGE: 12 OF 33

ITEM NO.	ITEM DESCRIPTION	QTY/INST. (Nos.)
01	IMPULSE PIPE MATL: ASTM A335 P22 SIZE: 1/2" NB-SCH 160	A/R
02	BULKHEAD UNION/COUPLING / AS PER ANSI B16.11 MATL: ASTM A182 F22 SIZE: 1/2" NB-SW / CL 6000	02
03	FORGED EQUAL TEE / AS PER ANSI B16.11 MATL: ASTM A182 F22 SIZE: 1/2" NB-SW / CL 6000	02
04	TEE-TUBE UNION MATL: SS316 SIZE: OD OF 1/2" NB x TO SUIT 1/2" OD SS TUBE	02
05	TUBE MATL: A213 TP316H SIZE: 1/2" OD x 2.1mm THK.	A/R
06	TUBE FITTING / DFDC MATL: SS316 SIZE: 1/2" NPTM x TO SUIT 1/2" OD SS TUBE	06
07	FIVE VALVE MANIFOLD WITH VENT PLUG MATL: SS316 PORT SIZE: 1/2" NPTF / PR. TESTING: 6000PSI	01
08	FORGED GLOBE VALVES BODY: ASTM A182 F22 / STEM MATL: A182 Gr F6a SIZE: 1/2" NB-SW / CL 3000 SPL	04
09	HALF COUPLING / ASPER ANSI B16.11 MATL: ASTM A182 F22 SIZE:1/2" NB-SW / CL 6000	02

COPY RIGHT AND CONFIDENTIAL
The information on this document is the property of Bharat Heavy Electricals Limited.
It must not be used directly or indirectly in anyway detrimental to the interest to the Company.

DATE

REVISION NO

REVISION NO	DATE	COPY RIGHT AND CONFIDENTIAL The information on this document is the property of Bharat Heavy Electricals Limited. It must not be used directly or indirectly in anyway detrimental to the interest to the Company.

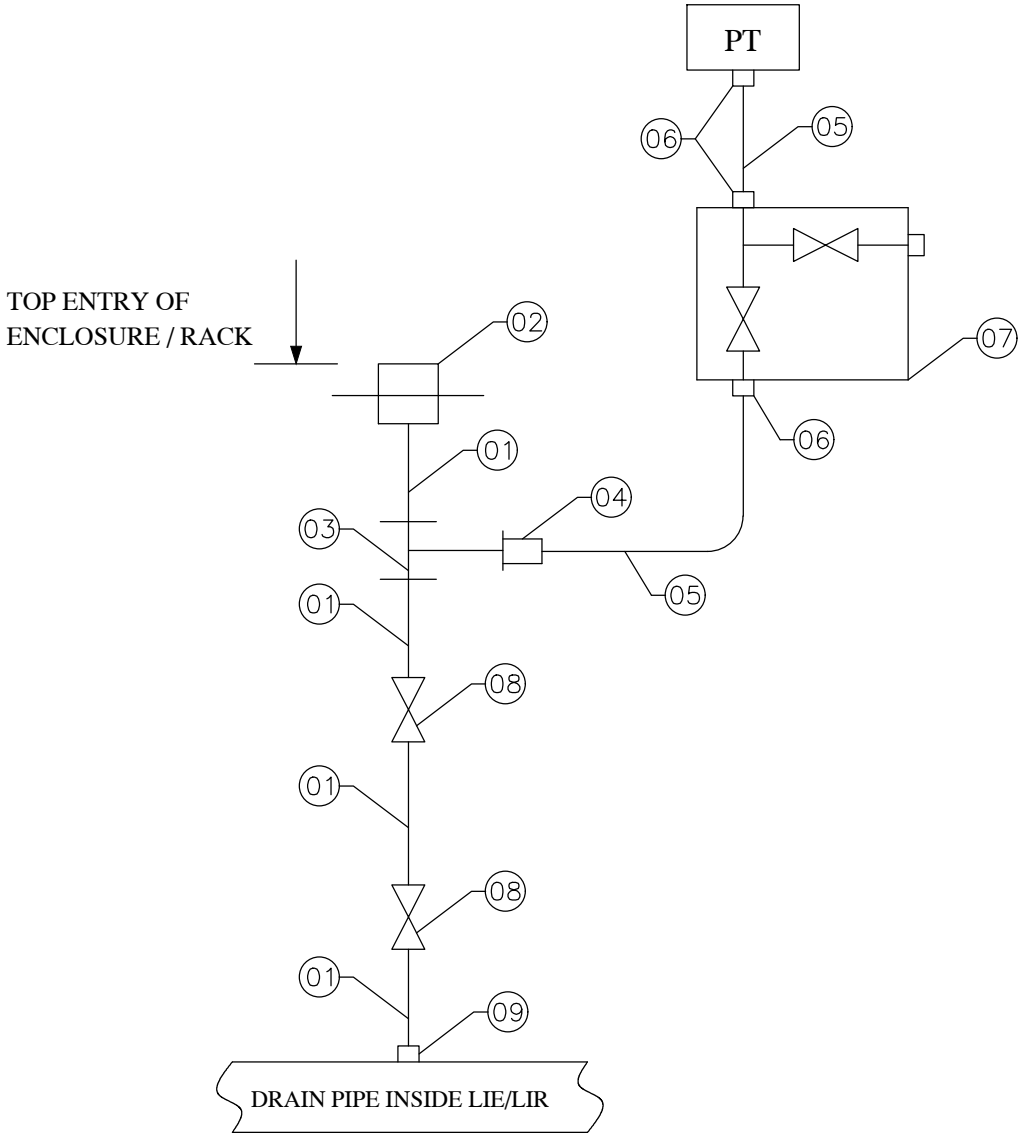

NOTES:

1. " TRANSMITTER BELOW SOURCE"
2. FOR BILL OF MATERIAL REFER PAGE 15 OF 33

A4 - 11

CE/416/NTPC/RC/HUP

REV. NO: 00

PAGE: 14 OF 33

ITEM NO.	ITEM DESCRIPTION	QTY/INST.
01	IMPULSE PIPE MATL: ASTM A106 Gr. C SIZE: 1/2" NB-SCH 160	A/R
02	BULKHEAD UNION / COUPLING / AS PER ANSI B16.11 MATL: ASTM A105 SIZE: 1/2" NB-SW / CL 6000	01
03	FORGED EQUAL TEE / AS PER ANSI B16.11 MATL: ASTM A105 SIZE: 1/2" NB-SW / CL 6000	01
04	TEE-TUBE UNION MATL: SS316 SIZE: OD OF 1/2" NB-PIPE x TO SUIT 1/2" OD SS TUBE	01
05	TUBE MATL: A213 TP316H SIZE: 1/2" OD x 2.1mm THK.	A/R
06	TUBE FITTING: DFDC MATL: SS316 SIZE: 1/2" NPTM x TO SUIT 1/2" OD SS TUBE	03
07	TWO VALVE MANIFOLD WITH VENT PLUG BODY: SS316 PORT SIZE: 1/2" NPTF / RATING: 6000 PSI	01
08	FORGED GLOBE VALVE BODY: ASTM A105 / STEM MATL: A182 Gr F6a SIZE: 1/2" NB-SW / CL 3000 SPL	02
09	HALF COUPLING / AS PER ANSI B16.11 MATL: ASTM A105 SIZE: 1/2" NB-SW / CL 6000	01

COPY RIGHT AND CONFIDENTIAL
The information on this document is the property of Bharat Heavy Electricals Limited.
It must not be used directly or indirectly in anyway detrimental to the interest to the Company.

DATE

REVISION NO

REVISION NO	DATE	COPY RIGHT AND CONFIDENTIAL The information on this document is the property of Bharat Heavy Electricals Limited. It must not be used directly or indirectly in anyway detrimental to the interest to the Company.		

A4 - 11

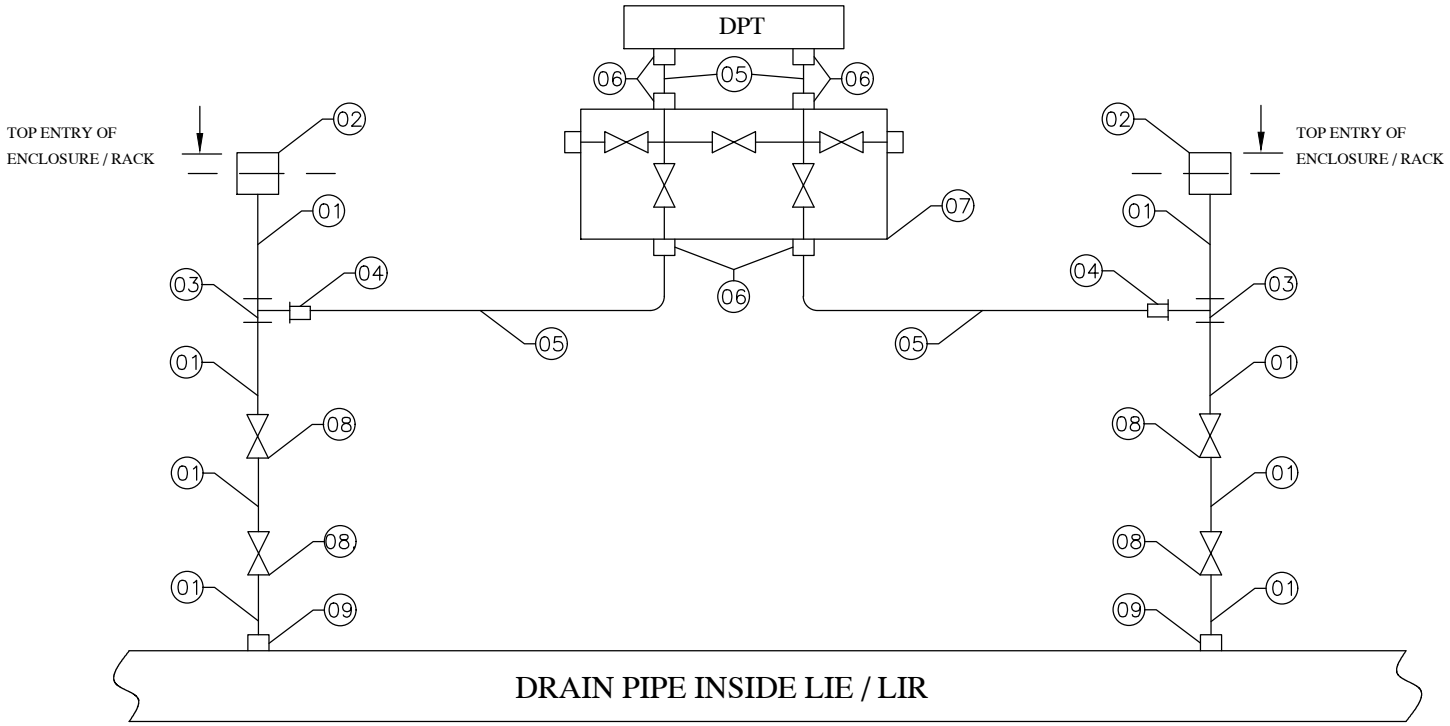

NOTE:

1. " TRANSMITTER BELOW SOURCE"
2. FOR BILL OF MATERIAL REFER PAGE 17 OF 33

CE/416/NTPC/RC/HUP

REV. NO: 00

PAGE: 16 OF 33

ITEM NO.	ITEM DESCRIPTION	QTY/INST.
01	IMPULSE PIPE MATL: ASTM A106 Gr. C SIZE: 1/2" NB-SCH 160	A/R
02	BULKHEAD UNION / COUPLING / AS PER ANSI B16.11 MATL: ASTM A105 SIZE: 1/2" NB-SW / CL 6000	02
03	FORGED EQUAL TEE / AS PER ANSI B16.11 MATL: ASTM A105 SIZE: 1/2" NB-SW / CL 6000	02
04	TEE-TUBE UNION MATL: SS316 SIZE: OD OF 1/2" NB-PIPE x TO SUIT 1/2" OD SS TUBE	02
05	TUBE MATL: A213 TP316H SIZE: 1/2" OD x 2.1mm THK.	A/R
06	TUBE FITTING: DFDC MATL: SS316 SIZE: 1/2" NPTM x TO SUIT 1/2" OD SS TUBE	06
07	FIVE VALVE MANIFOLD WITH VENT PLUG BODY: SS316 PORT SIZE: 1/2" NPTF / RATING: 6000 PSI	01
08	FORGED GLOBE VALVE BODY: ASTM A105 / STEM MATL: A182 Gr F6a SIZE: 1/2" NB-SW / CL 3000 SPL	04
09	HALF COUPLING / AS PER ANSI B16.11 MATL: ASTM A105 SIZE: 1/2" NB-SW / CL 6000	02

COPY RIGHT AND CONFIDENTIAL
The information on this document is the property of Bharat Heavy Electricals Limited.
It must not be used directly or indirectly in anyway detrimental to the interest to the Company.

DATE

REVISION NO

REVISION NO	DATE	COPY RIGHT AND CONFIDENTIAL The information on this document is the property of Bharat Heavy Electricals Limited. It must not be used directly or indirectly in anyway detrimental to the interest to the Company.

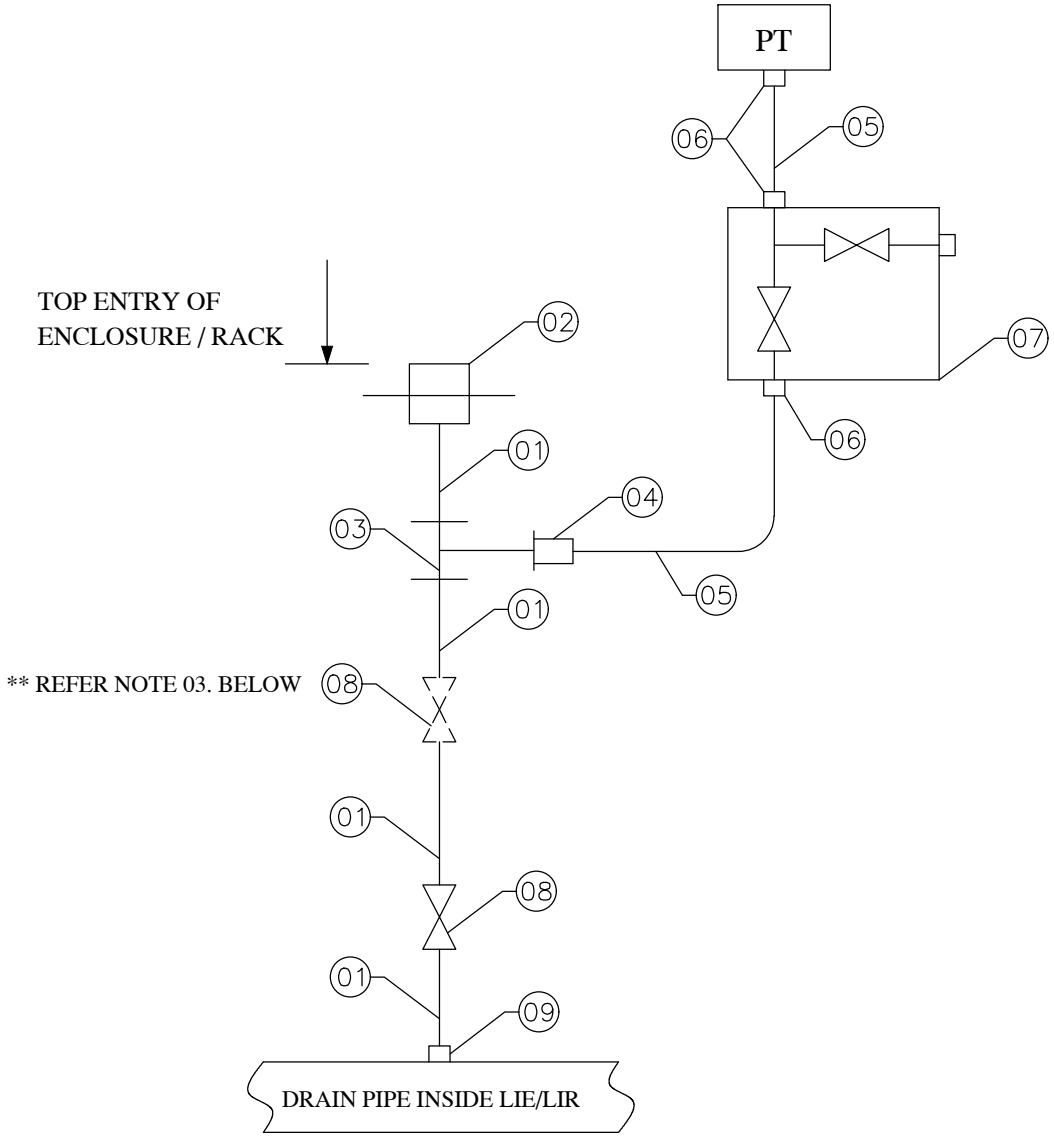

NOTES:

01. "TRANSMITTER BELOW SOURCE"
02. FOR BILL OF MATERIAL REFER PAGE 19 OF 33
03. ADDTIONAL DRAIN VALVE (ITEM 08) IS APPLICABLE FOR DESIGN PRESS/TEMP > OR EQUAL TO 40 KG/CM2 OR 280 DEG C

A4 - 11

CE/416/NTPC/RC/HUP

REV. NO: 00

ITEM NO.	ITEM DESCRIPTION	QTY/INST.
01	IMPULSE PIPE MATL: ASTM A106 Gr. C SIZE: 1/2" NB-SCH 80	A/R
02	BULKHEAD UNION / COUPLING / AS PER ANSI B16.11 MATL: ASTM A105 SIZE: 1/2" NB-SW / CL 3000	01
03	FORGED EQUAL TEE / AS PER ANSI B16.11 MATL: ASTM A105 SIZE: 1/2" NB-SW / CL 3000	01
04	TEE-TUBE UNION MATL: SS316 SIZE: OD OF 1/2" NB-PIPE x TO SUIT 1/2" OD SS TUBE	01
05	TUBE MATL: A213 TP316H SIZE: 1/2" OD x 2.1mm THK.	A/R
06	TUBE FITTING: DFDC MATL: SS316 SIZE: 1/2" NPTM x TO SUIT 1/2" OD SS TUBE	03
07	TWO VALVE MANIFOLD WITH VENT PLUG BODY: SS316 PORT SIZE: 1/2" NPTF / RATING: 3000 PSI	01
08**	FORGED GLOBE VALVE BODY: ASTM A105 / STEM MATL: A182 Gr F6a SIZE: 1/2" NB-SW / CL 800	A/R
09	HALF COUPLING / AS PER ANSI B16.11 MATL: ASTM A105 SIZE: 1/2" NB-SW / CL 3000	01

COPY RIGHT AND CONFIDENTIAL
The information on this document is the property of Bharat Heavy Electricals Limited.
It must not be used directly or indirectly in anyway detrimental to the interest to the Company.

DATE

REVISION NO

REVISION NO	DATE	COPY RIGHT AND CONFIDENTIAL The information on this document is the property of Bharat Heavy Electricals Limited. It must not be used directly or indirectly in anyway detrimental to the interest to the Company.		

A4 - 11

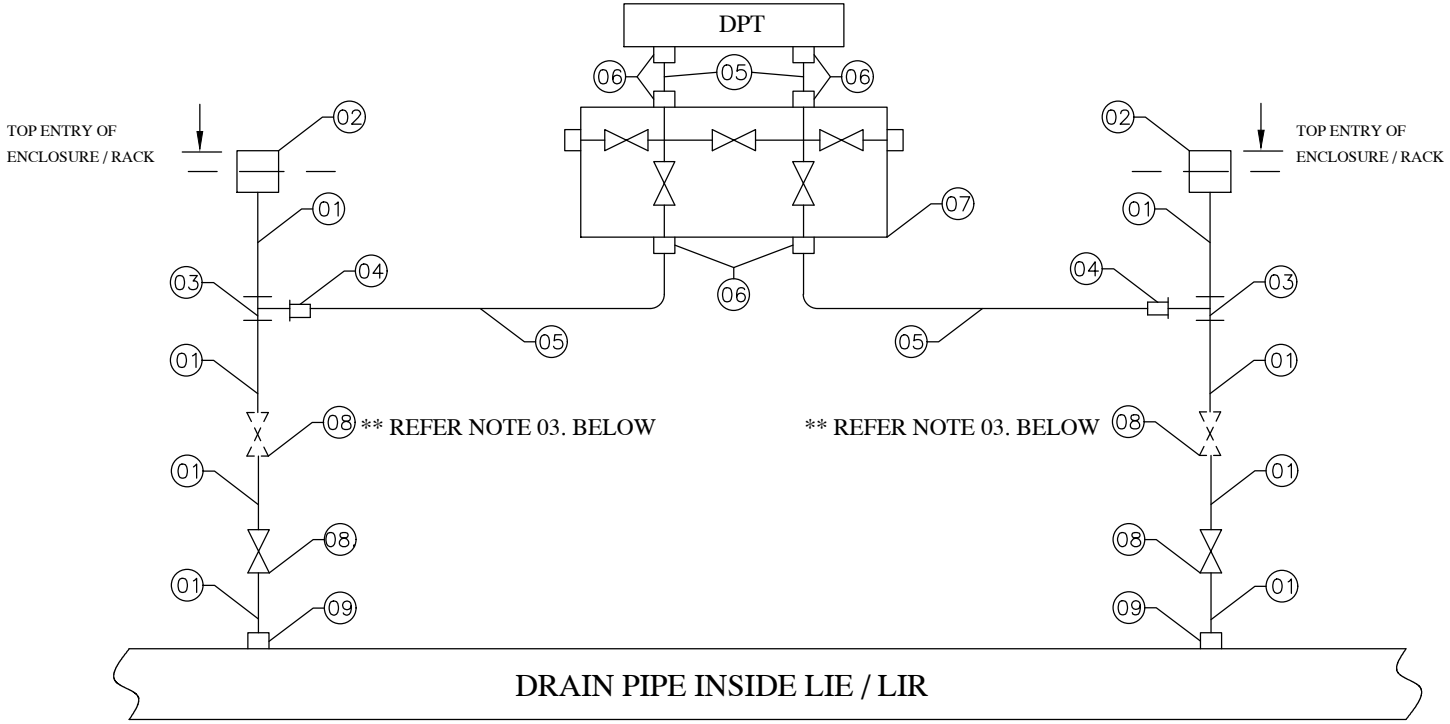

NOTE:

01. " TRANSMITTER BELOW SOURCE"
02. FOR BILL OF MATERIAL REFER PAGE 21 OF 33
03. ADDTIONAL DRAIN VALVE (ITEM 08) IS APPLICABLE FOR DESIGN PRESS/TEMP > OR EQUAL TO 40 KG/CM2 OR 280 DEG C

CE/416/NTPC/RC/HUP

REV. NO: 00

PAGE: 20 OF 33

ITEM NO.	ITEM DESCRIPTION	QTY/INST.
01	IMPULSE PIPE MATL: ASTM A106 Gr. C SIZE: 1/2" NB-SCH 80	A/R
02	BULKHEAD UNION / COUPLING / AS PER ANSI B16.11 MATL: ASTM A105 SIZE: 1/2" NB-SW / CL 3000	02
03	FORGED EQUAL TEE / AS PER ANSI B16.11 MATL: ASTM A105 SIZE: 1/2" NB-SW / CL 3000	02
04	TEE-TUBE UNION MATL: SS316 SIZE: OD OF 1/2" NB-PIPE x TO SUIT 1/2" OD SS TUBE	02
05	TUBE MATL: A213 TP316H SIZE: 1/2" OD x 2.1mm THK.	A/R
06	TUBE FITTING: DFDC MATL: SS316 SIZE: 1/2" NPTM x TO SUIT 1/2" OD SS TUBE	06
07	TWO VALVE MANIFOLD WITH VENT PLUG BODY: SS316 PORT SIZE: 1/2" NPTF / RATING: 3000 PSI	02
08**	FORGED GLOBE VALVE BODY: ASTM A105 / STEM MATL: A182 Gr F6a SIZE: 1/2" NB-SW / CL 800	A/R
09	HALF COUPLING / AS PER ANSI B16.11 MATL: ASTM A105 SIZE: 1/2" NB-SW / CL 3000	02

COPY RIGHT AND CONFIDENTIAL
The information on this document is the property of Bharat Heavy Electricals Limited.
It must not be used directly or indirectly in anyway detrimental to the interest to the Company.

DATE

REVISION NO

REVISION NO	DATE	COPY RIGHT AND CONFIDENTIAL The information on this document is the property of Bharat Heavy Electricals Limited. It must not be used directly or indirectly in anyway detrimental to the interest to the Company.

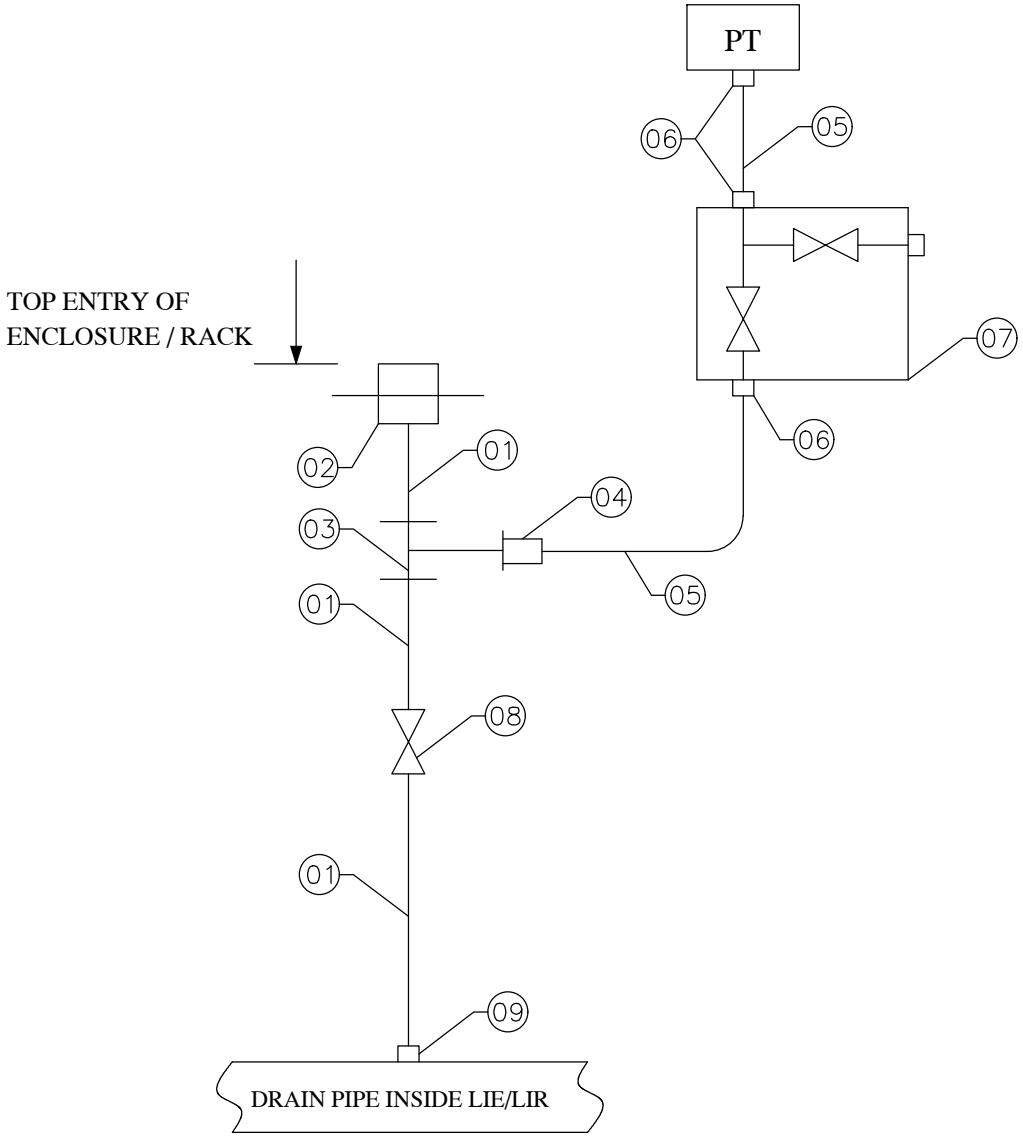

NOTE:

1. " TRANSMITTER BELOW SOURCE"
2. FOR BILL OF MATERIAL REFER PAGE 23 OF 33

A4 - 11

CE/416/NTPC/RC/HUP

REV. NO: 00

PAGE: 22 OF 33

ITEM NO.	ITEM DESCRIPTION	QTY/INST.
01	IMPULSE PIPE MATL : ASTM A312 TP316L SIZE : 1/2" NB-SCH 80	A/R
02	BULK HEAD UNION / COUPLING/AS PER ANSI B16:11 MATL:ASTM A182 F316L SIZE : 1/2" NB-SW CL 3000 LBS	01
03	FORGED EQUAL TEE / AS PER ANSI B16.11 MATL : ASTM A182 F316L SIZE : 1/2" NB-SW / CL 3000 LBS	01
04	TEE-TUBE UNION MATL: SS316L SIZE: OD OF 1/2" NBxTO SUIT 1/2" OD SS TUBE	01
05	TUBE MATL. : A213 TP316L SIZE : OD x 2.1 mmTHK.	A/R
06	TUBE FITTING / DFDC MATL. : SS316L SIZE : 1/2" NPTM x TO SUIT 1/2" OD SS TUBE	03
07	TWO VALVE MANIFOLD WITH VENT PLUG MATL. : SS316L PORT SIZE : 1/2" NPTF PR. TESTING : 3000PSI	01
08	FORGED GLOBE VALVES BODY : ASTM A182 F316L / STEM MATL: A182 Gr.F6a SIZE : 1/2" NB-SW / CL 800	01
09	HALF COUPLING /ASPER ANSI B16.11 MATL : ASTM A182 F316L SIZE:1/2" NB-SW / CL3000 LBS	01

COPY RIGHT AND CONFIDENTIAL
The information on this document is the property of Bharat Heavy Electricals Limited.
It must not be used directly or indirectly in anyway detrimental to the interest to the Company.

DATE

REVISION NO

REVISION NO	DATE	COPY RIGHT AND CONFIDENTIAL The information on this document is the property of Bharat Heavy Electricals Limited. It must not be used directly or indirectly in anyway detrimental to the interest to the Company.		

A4 - 11

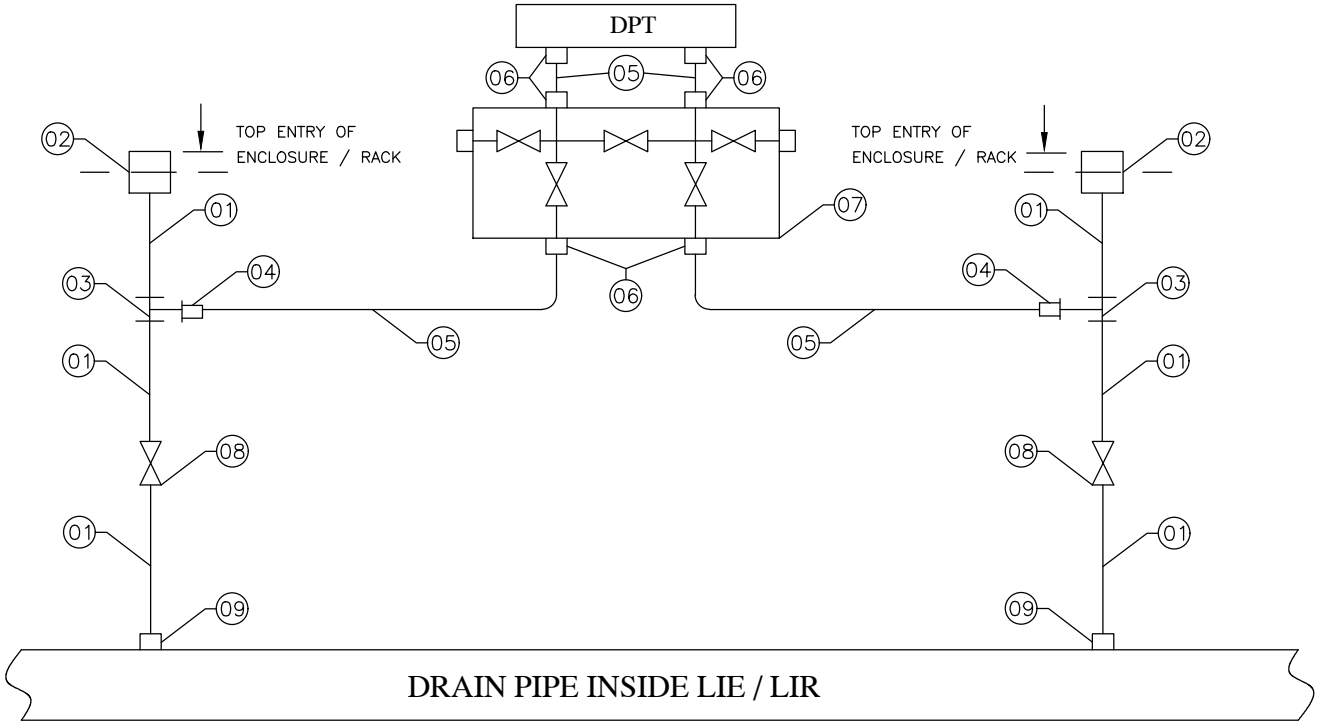

NOTE:

1. " TRANSMITTER BELOW SOURCE"
2. FOR BILL OF MATERIAL REFER PAGE 25 OF 33

CE/416/NTPC/RC/HUP

REV. NO: 00

PAGE: 24 OF 33

ITEM NO.	ITEM DESCRIPTION	QTY/INST.
01	IMPULSE PIPE MATL : ASTM A312 TP316L SIZE : 1/2" NB-SCH 80	A/R
02	BULK HEAD UNION/COUPLING/AS PER ANSI B16:11 MATL:ASTM A182 F316L SIZE : 1/2" NB-SW CL 3000 LBS	02
03	FORGED EQUAL TEE / AS PER ANSI B16.11 MATL : ASTM A182 F316L SIZE : 1/2" NB-SW / CL 3000 LBS	02
04	TEE-TUBE UNION MATL: SS316L SIZE: OD OF 1/2" NBxTO SUIT 1/2" OD SS TUBE	02
05	TUBE MATL. : A213 TP316L SIZE : OD x 2.1 mmTHK.	A/R
06	TUBE FITTING / DFDC MATL. : SS316L SIZE : 1/2" NPTM x TO SUIT 1/2" OD SS TUBE	06
07	FIVE VALVE MANIFOLD WITH VENT PLUG MATL. : SS316L PORT SIZE : 1/2" NPTF PR. TESTING : 3000PSI	01
08	FORGED GLOBE VALVES BODY : ASTM A182 F316L / STEM MATL: A182 Gr.F6a SIZE : 1/2" NB-SW / CL 800	02
09	HALF COUPLING /ASPER ANSI B16.11 MATL : ASTM A182 F316L SIZE:1/2" NB-SW / CL3000 LBS	02

COPY RIGHT AND CONFIDENTIAL
The information on this document is the property of Bharat Heavy Electricals Limited.
It must not be used directly or indirectly in anyway detrimental to the interest to the Company.

DATE

REVISION NO

REVISION NO	DATE	COPY RIGHT AND CONFIDENTIAL The information on this document is the property of Bharat Heavy Electricals Limited. It must not be used directly or indirectly in anyway detrimental to the interest to the Company.		

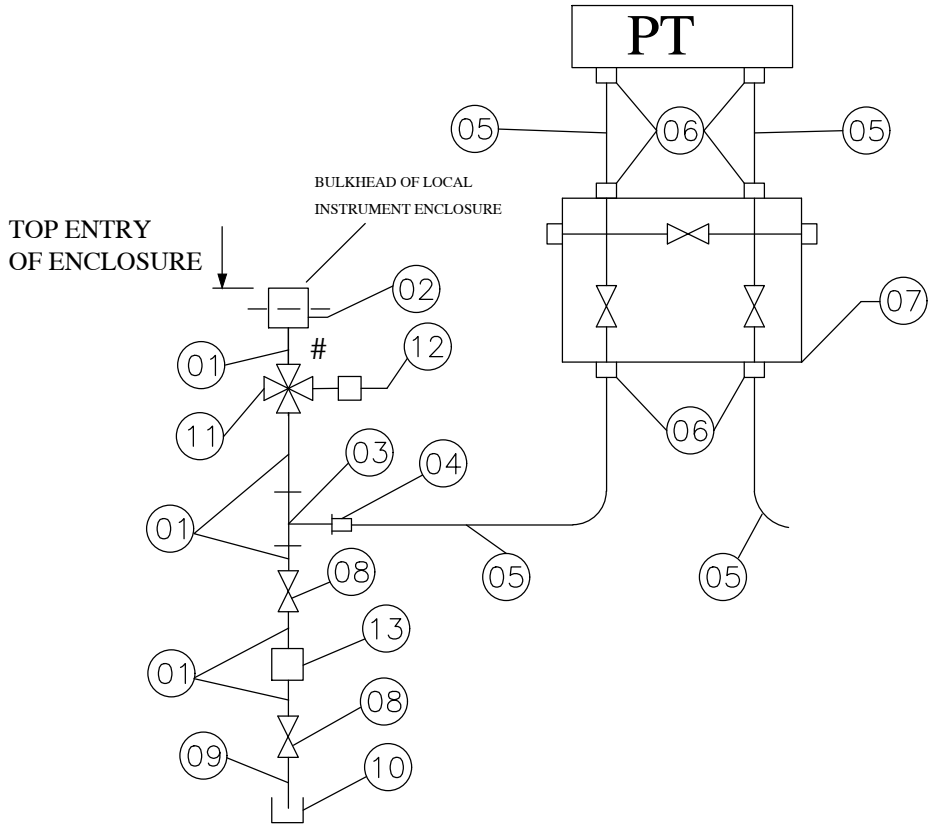

NOTES:

01. "TRANSMITTER BELOW SOURCE"
02. FOR BILL OF MATERIAL REFER PAGE 27 OF 33
03. # FOR INTERMITTANT PURGING REFER PAGE NO. 32 & 33 OF 33

CE/416/NTPC/RC/HUP

REV. NO: 00

ITEM NO.	ITEM DESCRIPTION	QTY/ INST. (Nos.)
02	IMPULSE PIPE MAT: ASTM A106 Gr. C SIZE: 3/4" NB-SCH 80	A/R
02	BULKHEAD UNION / COUPLING / AS PER ANSI B16.11 MATL: ASTM A105 SIZE: 3/4" NB-SW / RATING: CL 3000	01
03	FORGED EQUAL TEE / AS PER ANSI B16.11 MATL: ASTM A105 SIZE: 3/4" NB-SW / RATING: CL 3000	01
04	TUBE UNION MATL: SS316 SIZE: OD OF 3/4" NB PIPE x TO SUIT 1/2" SS TUBE	01
05	TUBE MATL: A213 TP316L SIZE: 1/2" OD x 1.13mm THK.	A/R
06	TUBE FITTING / DFDC MATL: SS316 SIZE: 1/2" NPT(M) x TO SUIT 1/2" OD TUBE	06
07	THREE VALVE MANIFOLD / PR. TESTING 3000PSI MATL: SS316 PORT SIZE: 1/2" NPT (F)	01
08	FORGED GLOBE VALVE BODY: ASTM A105 SIZE: 3/4" NB-SW / CL 800	02
09	NIPPLE / MATL: ASTM A106 Gr B/C SIZE: 3/4" NB-SCH 80 CONN : ONE END PLAIN x OTHER END 3/4"NPTM	01
10	CAP MATL: ASTM A105 SIZE: 3/4" NPTF CL 3000	01
10	FOUR WAY VALVE BODY MATL: ASTM A105 SIZE: (2x3/4" NB-SW) x (2x1/2" NPTF) / RATING: CL 800	01
11	QUICK DISCONNECTING FITTING MATL: SS 304 SIZE: 1/2" NPTM	01
12	DRAIN POT: 2" NB-SCH 80 BODY: A106 Gr B/C / CONN. 3/4" NB-SW	01

COPY RIGHT AND CONFIDENTIAL
The information on this document is the property of Bharat Heavy Electricals Limited.
It must not be used directly or indirectly in anyway detrimental to the interest to the Company.

DATE

REVISION NO

REVISION NO	DATE	COPY RIGHT AND CONFIDENTIAL The information on this document is the property of Bharat Heavy Electricals Limited. It must not be used directly or indirectly in anyway detrimental to the interest to the Company.		

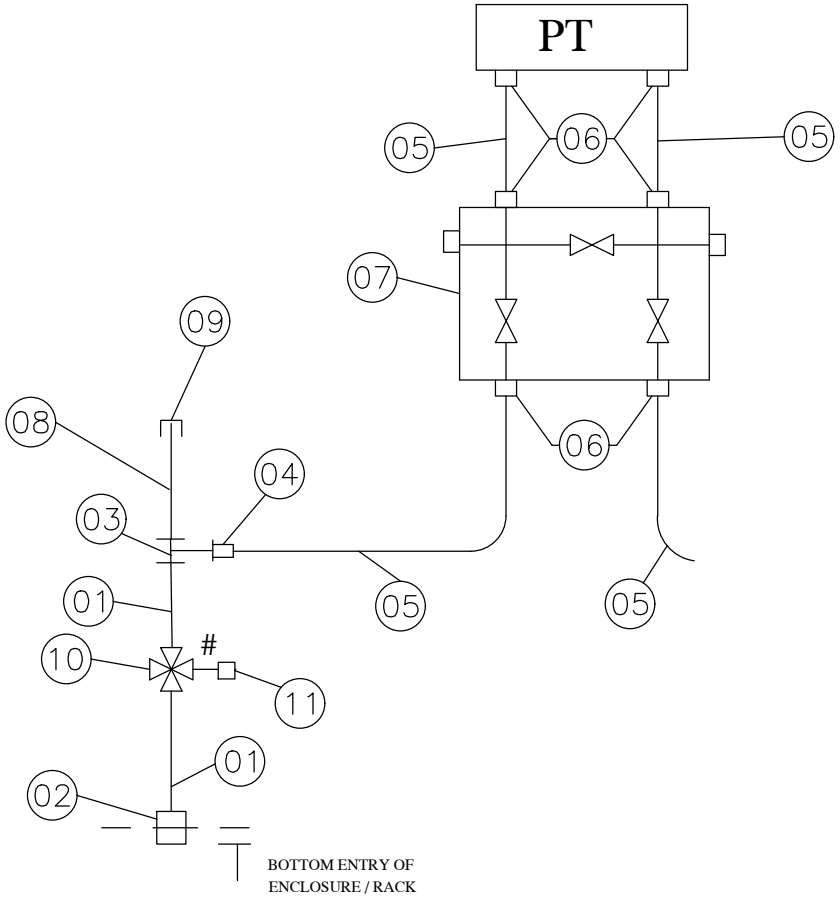

NOTES:

01. "TRANSMITTER BELOW SOURCE"
02. FOR BILL OF MATERIAL REFER PAGE 29 OF 33
04. # FOR INTERMITTANT PURGING REFER PAGE NO 32 & 33 OF 33

CE/416/NTPC/RC/HUP

REV. NO: 00

ITEM NO.	ITEM DESCRIPTION	QTY/ INST. (Nos.)
01	IMPULSE PIPE MATL: A106 Gr. C SIZE: 3/4" NB-SW SCH 80	A/R
02	BULKHEAD UNION / COUPLING / AS PER ANSI B16.11 MATL: ASTM A105 SIZE: 3/4" NB-SW / RATING: CL 3000	01
03	FORGED EQUAL TEE / AS PER ANSI B16.11 MATL: ASTM A105 SIZE: 3/4" NB-SW / RATING: CL 3000	01
04	TEE TUBE UNION MATL: SS316 SIZE: OD OF 3/4" NB PIPE x TO SUIT 1/2" SS TUBE	01
05	TUBE MATL: ASTM A213 TP316L SIZE: 1/2" OD x 1.13mm THK.	A/R
06	TUBE FITTING / DFDC MATL: SS316 SIZE: 1/2" NPT (M) x TO SUIT 1/2" OD TUBE,	06
07	THREE VALVE MANIFOLD MATL: SS316 PORT SIZE: 1/2" NPT(F) / PR. TESTING: 3000PSI	01
08	NIPPLE/ MATL: ASTM A106 Gr B/C SIZE: 3/4" NB-SCH 80 CONN. ONE END PLAIN x OTHER END 3/4" NPTM	01
09	CAP MATL: ASTM A105 SIZE: 3/4" NPTF CL 3000	01
10	FOUR WAY VALVE MATL: BODY ASTM A105 SIZE: 2x3/4" NB-SW x 2x1/2" NPTF / RATING: CL 800	01
11	QUICK DISCONNECTING FITTING MATL: SS 304 SIZE: 1/2" NPTM	01

COPY RIGHT AND CONFIDENTIAL
The information on this document is the property of Bharat Heavy Electricals Limited.
It must not be used directly or indirectly in anyway detrimental to the interest to the Company.

DATE

REVISION NO

REVISION NO	DATE	COPY RIGHT AND CONFIDENTIAL The information on this document is the property of Bharat Heavy Electricals Limited. It must not be used directly or indirectly in anyway detrimental to the interest to the Company.		

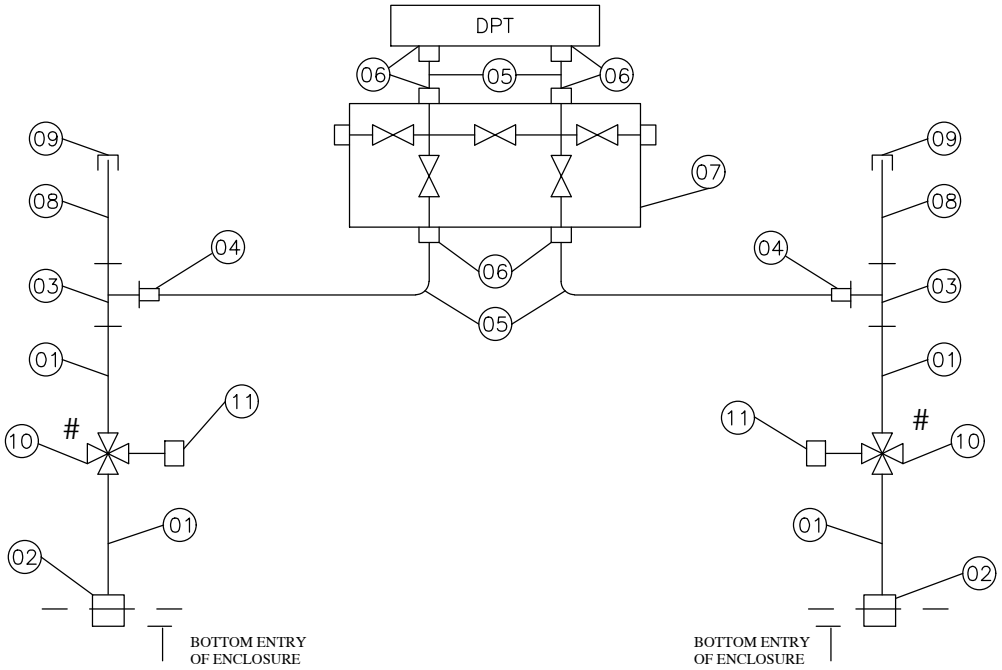

NOTES:

01. "TRANSMITTER BELOW SOURCE"
02. FOR BILL OF MATERIAL REFER PAGE 31 OF 33
03. # FOR INTERMITTANT PURGING REFER PAGE NO 32 & 33 OF 33

CE/416/NTPC/RC/HUP

REV. NO: 00

ITEM NO.	ITEM DESCRIPTION	QTY/INST.
01	IMPULSE PIPE MATL: ASTM A106 Gr. C SIZE: 3/4" NB-SCH 80	A/R
02	BULKHEAD UNION / COUPLING / AS PER ANSI B16.11 MATL: ASTM A105 SIZE: 3/4" NB-SW / CL 3000	02
03	FORGED EQUAL TEE / AS PER ANSI B16.11 MATL: ASTM A105 SIZE: 3/4" NB-SW / CL 3000	02
04	TEE TUBE UNION MATL: SS316 CONN: OD OF 3/4" NB-PIPE x TO SUIT TO 1/2" OD SS TUBE	02
05	TUBE MATL: A213 TP316L SIZE: 1/2" OD x 1.13mm THK.	A/R
06	TUBE FITTING / DFDC MATL: SS316 CONN: 1/2" NPTM x TO SUIT 1/2" OD SS TUBE	06
07	FIVE VALVE MANIFOLD WITH VENT PLUGS BODY: SS316 PORT SIZE: 1/2" NPTF / PR. TESTING: 3000PSI	01
08	NIPPLE MATL: ASTM A106 Gr. B/C SIZE: ONE END PLAIN x OTHER END 3/4" NPTM	02
09	C.S CAP MATL: ASTM A105 SIZE: 3/4" NPTF / CL 3000	02
10	FOUR WAY VALVE MATL: ASTM A105 / RATING CL. 800 SIZE: (2x3/4" NB-SW) x (2x1/2" NPTF) / RATING: CL 800	02
11	QUICK DISCONNECTING FITTING MATL: SS 304 SIZE: 1/2" NPTM	02

COPY RIGHT AND CONFIDENTIAL
The information on this document is the property of Bharat Heavy Electricals Limited.
It must not be used directly or indirectly in anyway detrimental to the interest to the Company.

DATE

REVISION NO

REVISION NO	DATE	COPY RIGHT AND CONFIDENTIAL The information on this document is the property of Bharat Heavy Electricals Limited. It must not be used directly or indirectly in anyway detrimental to the interest to the Company.		

TYPICAL PURGE AIR SCHEME

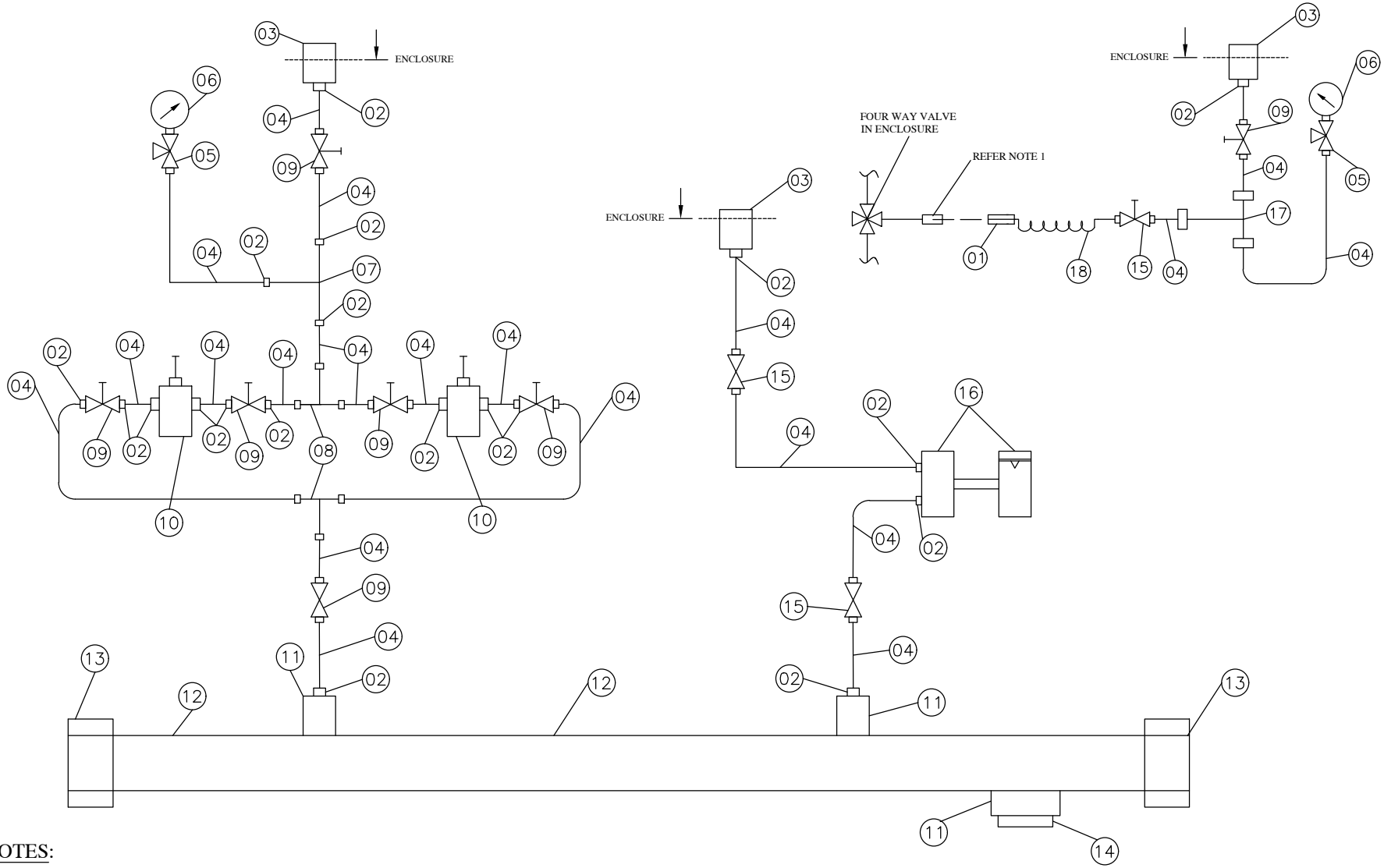

NOTES:

01. "TRANSMITTER BELOW SOURCE"
02. FOR BILL OF MATERIAL REFER PAGE 33 OF 33

CE/416/NTPC/RC/HUP

REV. NO: 00

REVISION NO	DATE

COPY RIGHT AND CONFIDENTIAL

The information on this document is the property of Bharat Heavy Electricals Limited.
It must not be used directly or indirectly in anyway detrimental to the interest to the Company.

ITEM NO.	ITEM DESCRIPTION	QTY/ INST. (Nos.)
01	QUICK DISCONNECTING FITTING-SS304/MALE SIZE : END CONN. TO SUIT 1/2" OD SS-TUBE	01
02	TUBE CONNECTOR SIZE : 1/2" NPTM x TO SUIT 1/2" OD SS TUBE MATL. ASTM Gr. SS316	03
03	BULK HEAD UNION / MATL : SS316 SIZE : 1/2" NPT (F) x 1/2" NPTF	A/R
04	TUBE MATL: ASTM A213 TP316L SIZE: 1/2" OD - 1.13mm THK.	A/R
05	THREE WAY GUAGE COCK MATL: SS316 SIZE: 1/2" NPTF x TO SUIT 1/2" OD SS TUBE	02
06	PRESSURE GUAGE / DIAL SIZE : 4" RANGE : 0-10 KG/Sq. CM BOTTOM CONN: 1/2" NPTM	02
07	EQUAL TEE FITTING / SS316 END CONN: 1/2" NPTF x (2 x TO SUIT 1/2" OD SS TUBE)	01
08	EQUAL TEE FITTING / FLARELESS FITTING SIZE : TO SUIT 1/2" OD SS TUBE	02
09	ISOLATING VALVE/GATE TYPE PROCESS CONN : 1/2" OD SS TUBE MTL : ASTM A182 F316	04
10	AIR FILTER REGULATOR PROCESS CONN : 1/2" NPTF	02

ITEM NO.	ITEM DESCRIPTION	QTY/ INST. (Nos.)
11	SS COUPLET SIZE : 1/2" NPTF MATL : SS316	01
12	AIR HEADER SIZE : 1" NB-SCH 40 / MATL: SS316	01
13	SS END CAP SIZE : 1" BSPF / MATL : SS316	02
14	PLUG SIZE : 1/2" NPTM MAT : SS316	01
15	NEEDLE VALVE/MATL : SS316 SIZE : END CONN. TO SUIT 1/2" OD SS TUBE	02
16	PURGE ROTAMETER PROCESS CONN : 1/2" NPTF	01
17	EQUAL TEE FITTING / MATL : A182 Gr F316 END CONN. - TO SUIT 1/2" OD SS TUBE	01
18	NYLON FLEXIBLE HOSE BRAIDED WITH SS WIRE SIZE = 1/2 " DIA.	1 MTR

PROJECT: RATE CONTRACT FOR LIE/LIR

CUSTOMER: M/s NTPC & M/s DVC

CONSULTANT: M/s NTPC

COPY RIGHT AND CONFIDENTIAL

THE INFORMATION ON THIS DOCUMENT IS THE PROPERTY OF BHARAT HEAVY ELECTRICALS LIMITED. IT MUST NOT BE USED DIRECTLY OR INDIRECTLY IN ANY WAY DETRIMENTAL TO THE INTEREST OF THE COMPANY.

SCHEMATIC DRAWINGS
FOR
LOCAL INSTRUMENT ENCLOSURE / RACKS
(LIE / LIR)

REVISIONS :	APPROVED BY		
	AMITKUMAR SHARMA		
	PREPARED BY	ISSUED	DATE
	RAJESH LINGUTLA	416	21/09/26

FIRST ANGLE PROJECTION

(ALL DIMENSIONS ARE IN mm)

DRG. No. CE/416/LIE/LIR/OGA2

COPYRIGHT AND CONFIDENTIAL
THE INFORMATION ON THIS DOCUMENT IS THE PROPERTY OF BHARAT HEAVY ELECTRICALS LTD. IT MUST NOT BE USED DIRECTLY OR INDIRECTLY IN ANY WAY DETRIMENTAL TO THE INTEREST OF THE COMPANY.

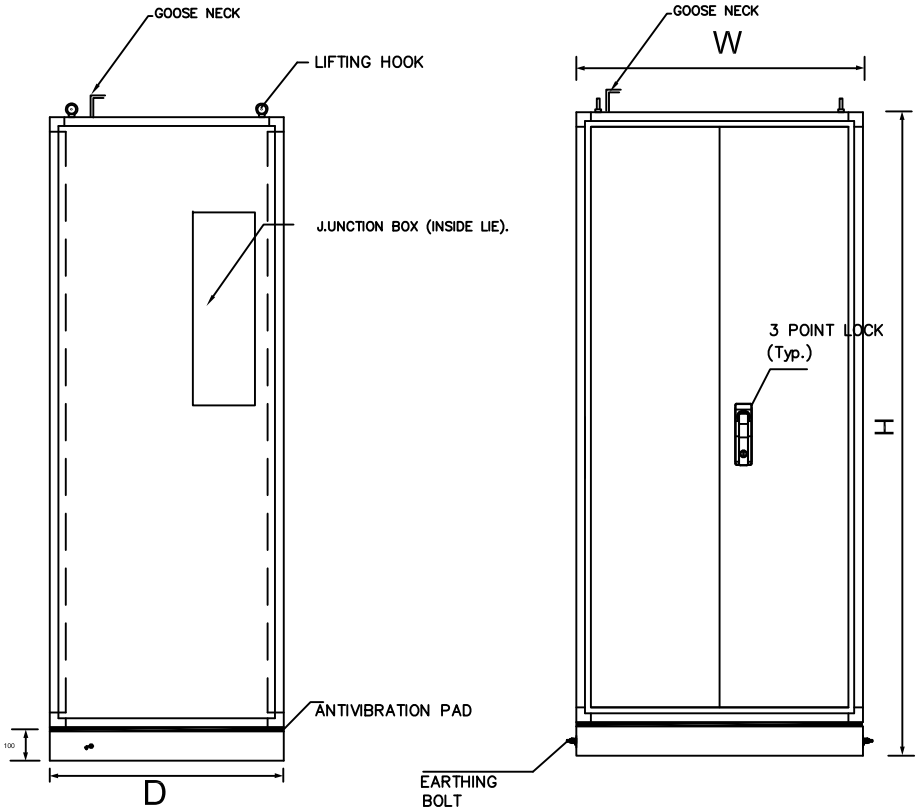

NOTES:-

1. ALL SHEETs ARE 1.6mm CRCA SHEET 3mm
2. ALL DOORS WILL BE FLUSH / CONCEALED TYPE
3. BULK HEAD PLATE (Minimum 6mm thick) FOR TOP & BOTTOM SHALL BE PROVIDED
4. CABLE GLAND PLATE OF THICKNESS 3.0 mm. CRCA SHEET SHALL BE PROVIDED AT BOTTOM OF J.B
5. ENCLOSURE SHALL BE OF IP-55 PROTECTION CLASS
6. TERMINAL SHALL BE PROVIDED IN SIDE THE J.B. AS PER TRANSMITTER GROUPING
7. DOORS SHALL BE THREE POINT LOCKING FOR FRONT AND REAR DOOR
8. GASKET SHALL BE PROVIDED BETWEEN BULK HEAD PLATE & ENCLOSURE
9. EARTH BUS BAR 25x6mm COPPER SHALL BE USED
10. MIN JB DIMENSION 800 MM X 200 MM X 200 MM.
11. BASE FRAME SHALL BE MADE OF ISMC 100 5mm
12. 1 No LED 11W,230V AC WITH FIXTURE SHALL BE PROVIDED
13. DRAIN PIPE SLOPE WILL BE I : 25 APPROX.
14. POWER SOCKET SHALL BE PROVIDED IN J.B. OF ENCLOSURE

LIE TYPE	H	W	D
A	2200	1400	800
B	2200	1000	800
C	2200	700	800

REF. DRG. No. FLREF

SIGN. & DATE

INVENTORY No.

REV.	DATE	ALTERED –	REV.	DATE	ALTERED –
–	–	CHECKED –	–	–	CHECKED –
		APPROVED –			APPROVED –

	NAME	SIGN	DATE
DRAWN	SAMY		14.09.2021
CHECKED	RKL		14.09.2021
APPROVED	RKL		14.09.2021

DEPT. BOP | CODE 416

PROD / PROJ : –

CUSTOMER: –

BHARAT HEAVY ELECTRICALS LIMITED.
ELECTRONICS DIVISION, BANGALORE

TITLE: OGA-FOR-LIE

No. OF SHEETS 04

SHEET No. 02

WBS. No. –

DRG. No. CE/416/LIE/LIR/OGA2

REV 00

FORM No. A3-03

A3 SIZE

FIRST ANGLE PROJECTION

(ALL DIMENSIONS ARE IN mm)

DRG. No. CE/416/LIE/LIR/OGA2

COPYRIGHT AND CONFIDENTIAL
THE INFORMATION ON THIS DOCUMENT IS THE PROPERTY OF BHARAT HEAVY ELECTRICALS LTD. IT MUST NOT BE USED DIRECTLY OR INDIRECTLY IN ANY WAY DETRIMENTAL TO THE INTEREST OF THE COMPANY.

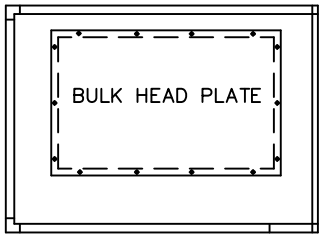

TOP VIEW

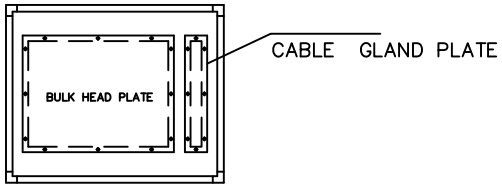

BOTTOM VIEW

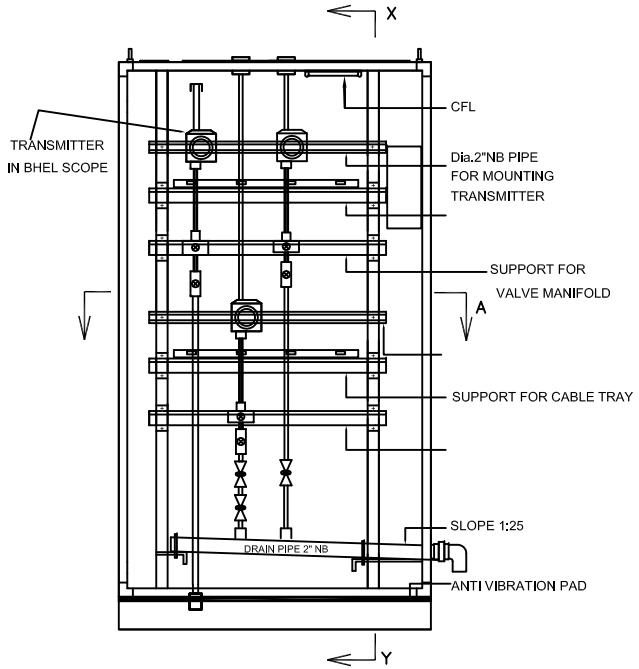

FRONT VIEW

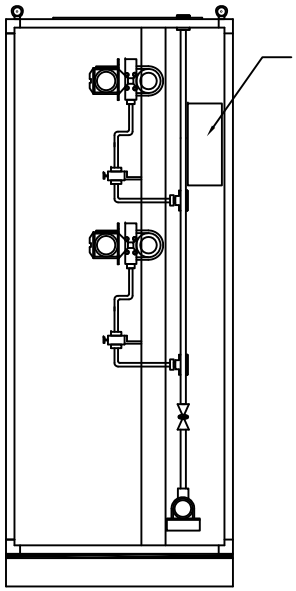

SIDE VIEW FROM X–Y

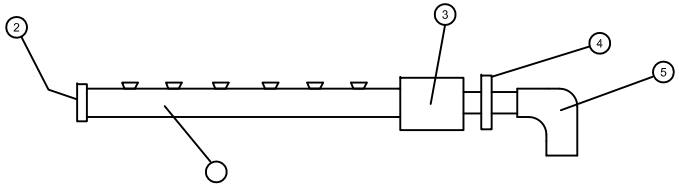

DRAIN PIPE

ITEM	DESCRIPTION	QTY.
1	2" NB ASTM A-106' SCH80/GR-C	A/R
2	2" S.W.CAP,CS ASTM A105	1No.
3	2" NBSW X 1" NPT(F) COUPLING CS ASTM A105	1No.
4	1" NPT (M) X1" BSP(M) HEX. COUPLING, CS ASTM105	1No.
5	1" BSP (F) ELBOW, CS ASTM A105	1No.

PROD / PROJ : –

CUSTOMER: –

REV.	DATE	ALTERED –	REV.	DATE	ALTERED –
–	–	CHECKED –	–	–	CHECKED –
		APPROVED –			APPROVED –

	NAME	SIGN	DATE
DRAWN	SAMY		14.09.2021
CHECKED	RKL		14.09.2021
APPROVED	RKL		14.09.2021

DEPT. BOP | CODE 416

BHARAT HEAVY ELECTRICALS LIMITED.
ELECTRONICS DIVISION, BANGALORE

TITLE: OGA–FOR–LIE

No. OF SHEETS: 04

SHEET No.: 03

WBS. No.: –

DRG. No.: CE/416/LIE/LIR/OGA2

REV: 00

REF. DRG. No. FLREF

SIGN. & DATE

INVENTORY No.

FORM No. A3–03

A3 SIZE

FIRST ANGLE PROJECTION

(ALL DIMENSIONS ARE IN mm)

DRG. No. CE/416/LIE/LIR/OGA2

COPYRIGHT AND CONFIDENTIAL
THE INFORMATION ON THIS DOCUMENT IS THE PROPERTY OF BHARAT HEAVY ELECTRICALS LTD. IT MUST NOT BE USED DIRECTLY OR INDIRECTLY IN ANY WAY DETRIMENTAL TO THE INTEREST OF THE COMPANY.

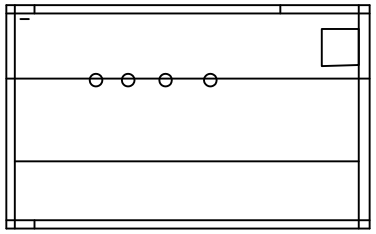

TOP VIEW

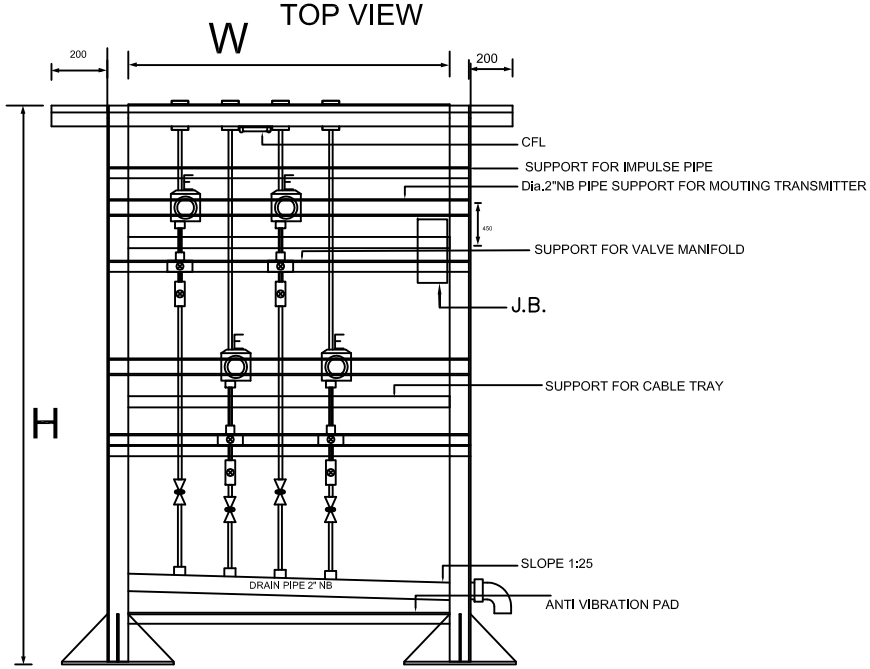

FRONT VIEW

NOTES:

1. JB TO BE LOCATED INSIDE THE LIR. JB DOOR SHALL OPEN FORM OUTSIDE.
2. LIR's ARE WITH 4 LEGS.
3. MINIMUM JB DIMENSION IS 800MM X 200MM X 200 MM.
4. SUPPORTING LEG SHALL BE MADE OF 6 MM THK ANGLE.
5. BULK HEAD PLATE SHALL BE PROVIDED AT THE TOP
6. TERMINAL SHALL BE PROVIDED IN SIDE THE J.B. AS PER TRANSMITTER GROUPING
7. GASKET SHALL BE PROVIDED BETWEEN BULK HEAD PLATE & RACK
8. EARTH BUS BAR 25x6mm COPPER SHALL BE USED
9. 1 No LED 11W,230V AC WITH FIXTURE SHALL BE PROVIDED
10. POWER SOCKET SHALL BE PROVIDED IN J.B. OF RACK
11. CANPAY ASSEMBLY WITH 3MM THICK CRCA SHEET

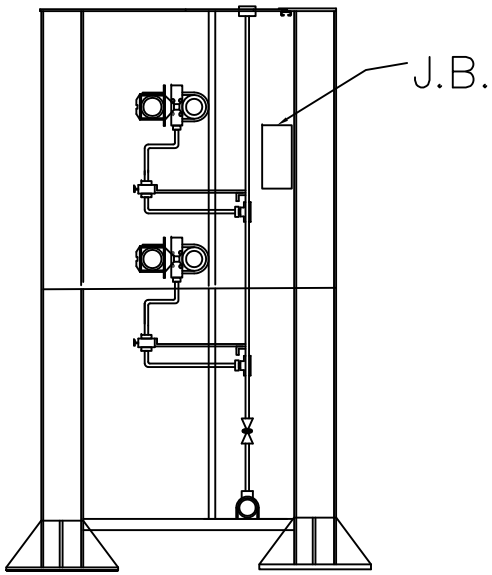

SIDE VIEW

LIR TYPE	H	W	D
A	2200	1650	800
B	2200	1330	800
C	2200	1010	800

PROD / PROJ : –

CUSTOMER: –

REV.	DATE	ALTERED –	REV.	DATE	ALTERED –
–	–	CHECKED –	–	–	CHECKED –
		APPROVED –			APPROVED –

	NAME	SIGN	DATE
DRAWN	SAMY		14.09.2021
CHECKED	RKL		14.09.2021
APPROVED	RKL		14.09.2021

DEPT. BOP | CODE 416

BHARAT HEAVY ELECTRICALS LIMITED.
ELECTRONICS DIVISION, BANGALORE

TITLE: OGA–FOR–LIR

No. OF SHEETS 04

SHEET No. 04

WBS. No. –

DRG. No. CE/416/LIE/LIR/OGA2

REV 00

REF. DRG. No. FLREF

SIGN. & DATE

INVENTORY No.

FORM No. A3–03

A3 SIZE

PROJECT: RATE CONTRACT FOR LIE/LIR

CUSTOMER: M/s NTPC & M/s DVC

CONSULTANT: M/s NTPC

COMPONENT VENDOR LIST

COPY RIGHT AND CONFIDENTIAL

THE INFORMATION ON THIS DOCUMENT IS THE PROPERTY OF BHARAT HEAVY ELECTRICALS LIMITED. IT MUST NOT BE USED DIRECTLY OR INDIRECTLY IN ANY WAY DETRIMENTAL TO THE INTEREST OF THE COMPANY.

REVISIONS :	APPROVED BY		
	AMITKUMAR SHARMA		
	PREPARED BY	ISSUED	DATE
	RAJESH LINGUTLA	416	21/09/26

COPY RIGHT AND CONFIDENTIAL
THE INFORMATION ON THIS DOCUMENT IS THE PROPERTY OF BHARAT HEAVY ELECTRICALS LIMITED . IT MUST NOT BE USED DIRECTLY OR INDIRECTLY IN ANY WAY DETRIMENTAL TO THE INTEREST OF THE COMPANY.

SUB COMPONENT VENDOR LIST

Sl No	Item Description	Approved Vendors
1	Socket Weld Fittings	PRECISION ENGG INDUSTRIES, MUMBAI
		V.K.INDUSTRIES,BANGALORE
		EXCEL HYDRO-PNEUMATICS PVT LTD,MUMBAI
		METPRESS ENGINEERING WORKS,KOLKATA
		BALDOTA VALVE AND FITTINGS PVT LTD,MUMBAI
		PANAM ENGINEERS LTD,MUMBAI
		AURA INC,NEW DELHI
		ARCELLOR CONTROLS ,AHMEDABAD
		HP VALVES & FITTINGS (INDIA) PVT. LTD,CHENNAI
		NAV DURGA FORGING AND FITTINGS PVT LTD, THANE, MAHARASTRA.
		PRIME ENGINEERS,MUMBAI
		DYNA FLUID VALVES AND FLOW CONTROLS,UDYAMBAG,BELGAUM
		ARYA CRAFTS & ENGINEERING PVT. LTD,MUMBAI
2	Compression Fitting	ARCELLOR CONTROLS (INDIA)
		METPRESS ENGINEERING WORKS,KOLKATA
		EXCEL HYDRO-PNEUMATICS PVT LTD, MUMBAI
		ARYA CRAFTS & ENGINEERING PVT. LTD.
		AURA INC.
		PRECISION ENGG INDUSTRIES, MUMBAI
		DynaFluid Valves and Flow Controls
		FLUID CONTROLS PVT. LTD,PUNE
		FLUIDFIT ENGINEERS PVT LTD
		HP VALVES & FITTINGS (INDIA) PVT. LTD, CHENNAI
		PANAM ENGINEERS LTD.
		PRECISION ENGG INDUSTRIES
		PRIME ENGINEERS
		Shreemaruti Instruments Pvt. Ltd.
		SWAGELOCK,USA
		SUPER TECHNICAL (INDIA) PVT. LTD.
3	Instrument Valves	BHARAT HEAVY ELECTRICALS LIMITED VALVES DIVISION, TIRUCHIRAPALLI, TAMILANADU.
		AURA INC.
		PARKER ,USA
		EXCEL HYDRO-PNEUMATICS PVT LTD,MUMBAI
		Fluid Control Pvt Ltd, Pune
		BALDOTA VALVE AND FITTINGS PVT LTD,MUMBAI
		HP VALVES & FITTINGS (INDIA) PVT. LTD,CHENNAI
		METPRESS ENGINEERING WORKS,KOLKATA
		SWAGELOK, USA
		ARCELLOR CONTROLS (INDIA)
		INSTRUMENTATION LIMITED,PALGHAT
4	Valve Manifolds	ARCELLOR CONTROLS (INDIA)
		ARYA CRAFTS & ENGINEERING PVT. LTD.
		AURA INC.
		BALDOTA VALVE AND FITTINGS PVT LTD,MUMBAI
		DYNAFLUID VALVES AND FLOW CONTROLS
		EXCEL HYDRO-PNEUMATICS PVT LTD
		FLUID CONTROL PVT. LTD, PUNE
		HAVI ENGINEERING INDIA PRIVATE LIMI
		PARKER HANNIFIN
		HP VALVES & FITTINGS (INDIA) PVT. LTD,CHENNAI
		MICRO PRECISION PRODUCTS PVT LTD, FARIDABAD, HARYANA.
		METPRESS ENGINEERING WORKS,KOLKATA
		PRECISION ENGG INDUSTRIES
		PRIME ENGINEERS
		SHARP ENGINEERING
		SWAGELOK, USA
		SHREEMARUTI INSTRUMENTS PVT. LTD.
		SUPER TECHNICAL (INDIA) PVT. LTD.

COPY RIGHT AND CONFIDENTIAL
THE INFORMATION ON THIS DOCUMENT IS THE PROPERTY OF BHARAT HEAVY ELECTRICALS LIMITED . IT MUST NOT BE USED DIRECTLY OR INDIRECTLY IN ANY WAY DETRIMENTAL TO THE INTEREST OF THE COMPANY.

SUB COMPONENT VENDOR LIST

Sl No	Item Description	Approved Vendors
5	Air Filter Regulator	FESTO, BANGALORE
		DIVYA CONTROL ELEMENTS PVT LTD
		PARKER HANNIFIN
		PLACKA INSTRUMENTS INDIA PVT LTD
		EMERSON (ASCO) CHENNAI
		FAIRCHILD USA
		SMC PNEUMATICS NOIDA
		SHAVO NORGEN, MUMBAI
6	Impulse Pipes / Seamless Tube	MAHRASTRA SEAMLESS, RAIGARH (CS PIPES ONLY)
		HEAVY MEATAL TUBES, AHMADABAD (only for CS Pipes & SS Pipes &Tubes)
		RATNAMANI METALS & TUBES LTD, AHMADABAD(only for SS Pipes &Tubes)
		SUMITOMO CORPORATION ,JAPAN
		TPS TECHNITUBE ROHREN WERKE GMBH, GERMANY
		ISMT, Ahamadnagar (CS Pipes Only)
		SANDVIK, SWEDEN. (only for SS Pipes &Tubes)
		DIVINE TUBES PVT LTD, GANDHI NAGAR, GUJARAT. (only for SS Pipes &Tubes)
		MAXIM TUBE COMPANY PVT LTD, CHATRAL, GUJARAT (only for SS Pipes &Tubes)
		SHUBHLAXMI METALS AND TUBES PVT LTD, UMBERGOAN, GUJARAT. (only for SS Pipes &Tubes)
		VENUS PIPES & TUBES LTD, KUTCH, GUJARAT. (only for SS Pipes &Tubes)
		VELURIC & MANNESMANN, GERMANY.
		BHARAT HEAVY ELECTRICALS LTD, TRICHY
7	Instrument cables	CORDS, BHIWADI
		CORDS, KAHARANI
		KEI, BHIWADI
		KERPEN CABLES, GERMANY
		DELTON, FARIDABAD
		UNIVERSAL CABLE, SATNA.
		NICCO, KOLKATA.
		TEW & C, USA.
		HABIA CABLES, SWEDEN.
		LAPP CABLES, GERMANY.
		ELKAY TELE LINKS, FARIDABAD.
		THERMO ELECTR BV, NETHERLAND.
		GUPTA POWER INSTRUMENT PVT LTD, KHURDHA.
		THERMOCABLES LTD,HYDERBAD
		POLYCAB ,DAMAN
		GOYOLENE FIBRES (INDIA) PVT LTD, SILVASSA
		TEMSENS INSTRUMENTS IND PVT LTD, UDAIPUR
		HAVELLS INDIA, ALWAR
		PARAMOUNT COMMUNICATIONS LTD, KHUSKHERA
		CMI, FARIDABAD
		ADVANCE CABLES PVT LTD, BENGALURU
		GEMSCAB INDUSTRIES LTD, BHIWADI
		APAR INDUSTRIES LTD, VALSAD
		SUYOG ELECTRICALS LTD, HALOL (GUJRAT)
		SPECIAL CABLES PVT LTD, RUDRAPUR
		T C COMMUNICATION

Note: Bidders Can Propose additional sub component vendors for above items with filling Sub Vendor questionnaire format (which is the part of this specifications), However if same is not approved by customer/BHEL vendors to provide sub component makes from the approved list without any price impact.

i.	***Item/Scope of Sub-contracting*** **उप-संविदा(अनुबंध) का मद/ दायरा**			
ii.	***Address of the registered office*** पंजीकृत कार्यालय का पता	***Details of Contact Person*** संपर्क व्यक्ति का विवरण ***(Name, Designation, Mobile, Email)*** (नाम, पदनाम, मोबाइल, ईमेल)		
iii.	***Name and Address of the proposed Sub-vendor's works where item is being manufactured*** प्रस्तावित उप-विक्रेता के कार्यों का नाम और पता, जहां मद का निर्माण किया जा रहा है	***Details of Contact Person:*** संपर्क व्यक्ति का विवरण ***(Name, Designation, Mobile, Email)*** (नाम, पदनाम, मोबाइल, ईमेल)		
iv.	***Annual Production Capacity for proposed item/scope of sub-contracting*** **उप-संविदा(अनुबंध)** के प्रस्तावित मद / दायरे के लिए वार्षिक उत्पादन क्षमता			
v.	***Annual production for last 3 years for proposed item/scope of sub-contracting*** **उप-संविदा(अनुबंध)** के प्रस्तावित मद / दायरे के लिए पिछले 3 वर्षों का वार्षिक उत्पादन			
vi.	***Details of proposed works*** **प्रस्तावित कार्यों का विवरण**			
1.	***Year of establishment of present works*** वर्तमान फैक्टरी की स्थापना का वर्ष			
2.	***Year of commencement of manufacturing at above works*** उपरोक्त फैक्टरी में निर्माण कार्य शुरू होने का वर्ष			
3.	***Details of change in Works address in past (if any*** पूर्व में फैक्टरी स्थल में परिवर्तन का विवरण (यदि कोई हो)***)***			
4.	***Total Area*** कुल क्षेत्र			
	Covered Area शामिल क्षेत्र			
5.	***Factory Registration/Factory License with validity, as applicable*** फैक्टरी पंजीकरण प्रमाण पत्र	***Details attached at Annexure – F2.1*** विवरण अनुलग्नक- एफ 2.1 पर संलग्न है		
6.	***Design/ Research & development set-up*** डिजाइन / अनुसंधान और विकास सेटअप ***(No. of manpower, their qualification, machines & tools employed etc.)*** (श्रमिकों की संख्या, उनकी योग्यता, मशीन और उपलब्ध उपकरण आदि)	***Applicable / Not applicable if manufacturing is as per Main Contractor/purchaser design)*** ***Details attached at Annexure – F2.2*** ***(if applicable)*** लागू / लागू नहीं, अगर विनिर्माण मुख्य संविदाकार / खरीददार के डिजाइन के अनुसार है) विवरण अनुलग्नक –एफ 2.2 पर संलग्न है । (यदि लागू हो)		
7.	***Overall organization Chart with Manpower Details (Design/Manufacturing/Quality etc)***	***Details attached at Annexure – F2.3*** विवरण अनुलग्नक – F2.3 में संलग्न है ।		

	मैनपावर विवरण के साथ समग्र संगठन का चार्ट(डिजाइन / विनिर्माण / गुणवत्ता आदि)	
8.	***After sales service set up in India, in case of foreign sub-vendor (Location, Contact Person, Contact details etc.)*** भारत में बिक्री सेवा की स्थापना के बाद, विदेशी उप-विक्रेता के मामले में(स्थल , संपर्क व्यक्ति, संपर्क विवरण आदि)	***Applicable / Not applicable*** लागू / लागू नहीं ***Details attached at Annexure – F2.4*** विवरण अनुलग्नक -2.4 पर संलग्न है ।
9.	***Manufacturing process execution plan with flow chart indicating various stages of manufacturing from raw material to finished product including outsourced process, if any*** फ्लोचार्ट सहित विनिर्माण प्रक्रिया निष्पादन योजना , जिसमें आउटसोर्स प्रक्रिया, यदि कोई हो, सहित कच्चे माल से तैयार उत्पाद तक विनिर्माण के विभिन्न चरणों को दर्शाया गया हो,	***Details attached at Annexure – F2.5*** विवरण अनुलग्नक - F2.5में संलग्न है ।
10.	***Sources of Raw Material/Major Bought Out Item*** कच्चे माल के स्रोत / खरीदे हुए मुख्य मद	***Details attached at Annexure – F2.6*** विवरण अनुलग्नक - F2.6में संलग्न है।
11.	***Quality Control exercised during receipt of raw material/BOI, in-process, Final Testing, packing*** कच्चे माल / खरीदे हुए मद, प्रक्रियाबद्ध, अंतिम परीक्षण, पैकिंग करते समय गुणवत्ता नियंत्रण	***Details attached at Annexure – F2.7*** विवरण अनुलग्नक - F2.7 पर संलग्न है
12.	***Manufacturing facilities*** ***(List of machines, special process facilities, material handling etc.)*** विनिर्माण सुविधा(मशीनों की सूची , विशेष प्रक्रिया सुविधाएं, सामग्री रख-रखाव आदि)	***Details attached at Annexure – F2.8*** विवरण अनुलग्नक - F2.8में संलग्न है ।
13.	***Testing facilities (List of testing equipment)*** परीक्षण सुविधाएं(परीक्षण उपकरण की सूची)	***Details attached at Annexure – F2.9*** विवरण अनुलग्नक – F2. 9 में संलग्न है ।
14.	***If manufacturing process involves fabrication then-*** यदि निर्माण प्रक्रिया में फेब्रिकेशन की गई है तो-	***Applicable / Not applicable*** लागू / लागू नहीं ***Details attached at Annexure – F2.10*** विवरण अनुलग्नक - F2.10में संलग्न है। ***(if applicable)*** लागू / लागू नहीं
	List of qualified Welders पात्र वेल्डर की सूची	
	List of qualified NDT personnel with area of specialization विशेषज्ञता के क्षेत्र सहित पात्र एनडीटी कार्मिकों की सूची	
15.	***List of out-sourced manufacturing processes with Sub-Vendors' names & addresses*** सब-वेंडर द्वारा बाह्य स्रोतों (उनके नाम और पते सहित)से करवाएं गए निर्माण प्रक्रियाओं की सूची	***Applicable / Not applicable*** लागू / लागू नहीं ***Details attached at Annexure. –F2.11*** विवरण अनुलग्नक - F2.11 में संलग्न है। ***(if applicable)*** (यदि लागू हो)
16.	***Supply reference list including recent supplies*** नवीनतम आपूर्ति सहित आपूर्ति संदर्भ सूची	***Details attached at Annexure – F2.12*** विवरण अनुलग्नक - F2.12 में संलग्न है । ***(as per format given below)*** (नीचे दिए गए प्रारूप के अनुसार)

Project/ package परियोजना /पैकेज	***Customer Name*** ग्राहक का नाम	***Supplied Item (Type/Rating/Model /Capacity/Size etc)*** आपूर्ति की गई वस्तु (प्रकार / रेटिंग / मॉडल / क्षमता / आकार आदि)	***PO ref no/date*** पीओ संदर्भ सं. / तिथि	***Supplied Quantity*** आपूर्ति की मात्रा	***Date of Supply*** आपूर्ति की तारीख

17.	***Product satisfactory performance feedback letter/certificates/End User Feedback*** उत्पाद के संतोषजनक प्रदर्शन संबंधी फीडबैक पत्र / प्रमाण पत्र / अंतिम उपयोगकर्ता फ़ीडबैक	***Attached at annexure - F2.13*** अनुलग्नक F2. 13पर संलग्न है
18.	***Summary of Type Test Report (Type Test Details, Report No, Agency, Date of testing) for the proposed product*** ***(similar or higher rating)*** प्रस्तावित उत्पाद (एक समान या उच्च रेटिंग वाले) के लिए टाइप टेस्ट रिपोर्ट (टाइप टेस्ट विवरण, रिपोर्ट संख्या, एजेंसी, जांच की तारीख) का सारांश नोट: - रिपोर्ट प्रस्तुत करने की आवश्यकता नहीं है ***Note:- Reports need not to be submitted***	***Applicable / Not applicable*** लागू / लागू नहीं ***Details attached at Annexure – F2.14*** विवरण अनुलग्नक - F2.1 4में संलग्न है ***(if applicable)*** (यदि लागू हो)
19.	***Statutory / mandatory certification for the proposed product*** प्रस्तावित उत्पाद के लिए वैधानिक / अनिवार्य प्रमाणीकरण	***Applicable / Not applicable*** लागू / लागू नहीं ***Details attached at Annexure – F2.15*** विवरण अनुलग्नक - F2.15 में संलग्न है ***(if applicable)*** (यदि लागू हो)
20.	***Copy of ISO 9001 certificate*** आईएसओ 9001 प्रमाण पत्र की प्रति ***(if available*** (यदि उपलब्ध हो)	***Attached at Annexure – F2.16*** विवरण अनुलग्नक - F2.16 में संलग्न है
21.	***Product technical catalogues for proposed item (if available)*** प्रस्तावित मद के लिए उत्पाद तकनीकी कैटलॉग (यदि उपलब्ध हो)	***Details attached at Annexure – F2.17*** विवरण अनुलग्नक - F2.1 7 में संलग्न है

Name : नाम:		***Desig : पद:***		***Sign : हस्ताक्षर:***		***Date : तिथि:***	

Company's Seal/Stamp:- कंपनी की मुहर / मोहर: -

PROJECT: RATE CONTRACT FOR LIE/LIR

CUSTOMER: M/s NTPC & M/s DVC

CONSULTANT: M/s NTPC

TYPICAL QUALITY CHECK LIST

COPY RIGHT AND CONFIDENTIAL

THE INFORMATION ON THIS DOCUMENT IS THE PROPERTY OF BHARAT HEAVY ELECTRICALS LIMITED. IT MUST NOT BE USED DIRECTLY OR INDIRECTLY IN ANY WAY DETRIMENTAL TO THE INTEREST OF THE COMPANY.

REVISIONS :

APPROVED BY		
AMITKUMAR SHARMA		
PREPARED BY	ISSUED	DATE
RAJESH LINGUTLA	416	21/09/26

	MANUFACTURER'S NAME & ADDRESS	MANUFACTURING QUALITY PLAN	
		ITEM : LOCAL INSTRUMENT ENCLOSURE & LOCAL INSTRUMENT RACK	QP Ref NO.: CE/416/LIE-LIR/QP REV. : 00 DT. :11.09.2026 PAGE : 02 OF 06

S. NO.	COMPONENTS & OPERATIONS	CHARACTERISTICS	CLASS	TYPE OF CHECK	QUANTUM OF CHECK	REFERENCE DOCUMENT	ACCEPTANCE NORMS	FORMAT OF RECORD	AGENCY D*	M	C	E	REMARKS
1	2	3	4	5	6	7	8	9		**10			11
(A)	***MATERIAL***												
1	CRCA SHEET	A) MATERIAL	MAJOR	CHEMICAL COMPOSITION	SAMPLE	IS-513 APP.DRG	IS-513	M.T.C./Q.A.REP.		V	V	V	
		B) THICKNESS	MAJOR	MEASUREMENT	100%	APP.DRG	APP.DRG	M.T.C./Q.A.REP.		P	V	V	
		C) HARDNESS	MAJOR	STRENGTH	SAMPLE	IS-513	IS-513	M.T.C./Q.A.REP.		V	V	V	
		D) SURFACE FINISH	MAJOR	VISUAL	100%	IS-513	IS-513	M.T.C./Q.A.REP.		P	V	V	
2	MS C- CHANNELS / MS ANGLE	A) DIMENSION	MAJOR	VISUAL	100%	APP.DRG/ F.S.	APP.DRG/ F.S.	M.T.C./Q.A.REP.		P	V	V	
		B) SURFACE DEFECTS	MAJOR	VISUAL	100%	APP.DRG/ F.S.	APP.DRG/ F.S.	M.T.C./Q.A.REP.		V	V	V	
		C) STRAIGHTNESS	MAJOR	MESUERMENT	100%	APP.DRG/ F.S.	APP.DRG/ F.S.	M.T.C./Q.A.REP.		V	V	V	
3	GASKET	A) DIMENSION	MAJOR	MEASUREMENT	SAMPLE	APP.DRG/ F.S.	APP.DRG/ F.S.	M.T.C./Q.A.REP.		P	V	V	
		B) HARDNESS/SHORE HARDNESS	MAJOR	MEASUREMENT	SAMPLE	APP.DRG/ F.S.	APP.DRG/ F.S.	M.T.C.		V	V	V	
4	TERMINALS	A) TYPE, SIZE & MAKE	MAJOR	VISUAL	100%	APP.DRG	APP.DRG	M.T.C./Q.A.REP.		P	V	V	

		LEGEND : * RECORDS, INDENTIFIED WITH `TICK' SHALL BE ESSENTIALLY INCLUDED BY CONTRACTOR IN QA DOCUMENTATION. ** M : MANUFACTURER/ SUBCONTRACTOR C: CONTRACTOR/ NOMINATED INSPECTION AGENCY E : END USER INDICATE `P' PERFORM, `W' WITNESS AND `V' VERIFICATION AS APPROPRIATE "CHP" END USER SHALL IDENTIFIED IN COLUMN `E'	FOR END USER :	DOC. NO.
MANUFACTURER /SUBCONTRACTOR	CONTRACTOR			
SIGNATURE			REVIEWED BY	NAME & SIGN OFAPPROVING AUTHORITY WITH SEAL

	MANUFACTURER'S NAME & ADDRESS	MANUFACTURING QUALITY PLAN	
		ITEM : LOCAL INSTRUMENT ENCLOSURE & LOCAL INSTRUMENT RACK	QP Ref NO.: CE/416/LIE-LIR/QP REV. : 00 DT. : 11.09.2026 PAGE : 03 OF 06

S. NO.	COMPONENTS & OPERATIONS	CHARACTERISTICS	CLASS	TYPE OF CHECK	QUANTUM OF CHECK	REFERENCE DOCUMENT	ACCEPTANCE NORMS	RECORD	D*	M	C	E	REMARKS
1	2	3	4	5	6	7	8	9		**10			11
5	PVC WIRE/ CABLE	A) TYPE, SIZE, MAKE	MAJOR	MEASUREMENT	SAMPLE	IS 694/APPD. APP.DRG	IS 694/APPD. APP.DRG	M.T.C./Q.A.REP.		P	V	V	
6	PAINT	A) SHADE	MAJOR	VISUAL	SAMPLE	APP. DRG	APP. DRG	M.T.C./Q.A.REP.		P	V	V	
		B) FINISH	MAJOR	VISUAL	SAMPLE	APP. DRG	APP. DRG	M.T.C./Q.A.REP.		P	V	V	
7	FLEXIBLE CONDUIT / M.S. CABLE TRAY	A) TYPE, SIZE & MAKE	MAJOR	VISUAL	SAMPLE	APP.DRG	APP.DRG	M.T.C./Q.A.REP.		P	V	V	
(B)	***COMPONENTS ****												* TYPE / MODEL /RANGE OF COMPONENTS AS PER BOM OF LIE/ LIR .
1	VALVES, MANIFOLDS	MECHANICAL	MAJOR	A)CHEM. TEST	SAMPLE	SUPPLIER CAT./ APP.DRG	SUPPLIER CAT./ APP.DRG	M.T.C./Q.A.REP.		V	V	V	
				B)FUNCTIONAL	100%	-DO-	-DO-	M.T.C./Q.A.REP.		P	V	V	
				C) DIMENSION	100%/SAM.	-DO-	-DO-	M.T.C./Q.A.REP.		P	V	V	
				D)HYDROSTA-TIC	10%	-DO-	-DO-	M.T.C./Q.A.REP.		V	V	V	
2	FITTINGS	MECHANICAL	MAJOR	A)CHEM. TEST	SAMPLE	-DO-	-DO-	M.T.C./Q.A.REP.		V	V	V	
				B) DIMENSION	100%/SAM.	-DO-	-DO-	M.T.C./Q.A.REP.		P	V	V	
				C)HYDROSTA-TIC	10%	-DO-	-DO-	M.T.C./Q.A.REP.		V	V	V	
3.a	PIPES	MECHANICAL	MAJOR	A)CHEM. & PHY. TEST	SAMPLE	-DO-	-DO-	M.T.C./Q.A.REP. M.T.C./Q.A.REP.		V	V	V	
				B) DIMENSION	100%/ SAM.	-DO-	-DO-	M.T.C./Q.A.REP.		P	V	V	

		LEGEND : * RECORDS, INDENTIFIED WITH `TICK' SHALL BE ESSENTIALLY INCLUDED BY CONTRACTOR IN QA DOCUMENTATION. ** M : MANUFACTURER/ SUBCONTRACTOR C: CONTRACTOR/ NOMINATED INSPECTION AGENCY E : END USER INDICATE `P' PERFORM, `W' WITNESS AND `V' VERIFICATION AS APPROPRIATE "CHP" END USER SHALL IDENTIFIED IN COLUMN `E'	FOR END USER :	DOC. NO.
MANUFACTURER /SUBCONTRACTOR	CONTRACTOR			
SIGNATURE			REVIEWED BY	NAME & SIGN OFAPPROVING AUTHORITY WITH SEAL

MANUFACTURER'S NAME & ADDRESS	MANUFACTURING QUALITY PLAN	
	ITEM : LOCAL INSTRUMENT ENCLOSURE & LOCAL INSTRUMENT RACK	QP Ref NO.: CE/416/LIE-LIR/QP REV. : 00 DT. : 11.09.2026 PAGE : 04 OF 06

S. NO.	COMPONENTS & OPERATIONS	CHARACTERISTICS	CLASS	TYPE OF CHECK	QUANTUM OF CHECK	REFERENCE DOCUMENT	ACCEPTANCE NORMS	RECORD	D*	M	C	E	REMARKS
1	2	3	4	5	6	7	8	9		**10			11
3.b	TUBES	MECHANICAL	MAJOR	A)CHEM. & PHY. TEST	SAMPLE	SUPPLIER CAT./ APP.DRG	SUPPLIER CAT./ APP.DRG	M.T.C./Q.A.REP.		V	V	V	
				B) DIMENSION	100%	-DO-	-DO-	M.T.C./Q.A.REP.		P	V	V	
				C) HYDROSTA-TIC	10%	-DO-	-DO-	M.T.C./Q.A.REP.		P	V	V	
(C)	**INPROCESS**												
1	FABRICATED/CUBICLE AND COMPONENTS	A) DIMENSION	CRITICAL	MEASUREMENT	100%	APP.DRG	APP.DRG	Q.A. REPORT		P	V	V	
		B) LIFTING FACILITY	CRITICAL	VISUAL	100%	APP.DRG	APP.DRG	Q.A. REPORT		P	V	V	
		C) CABLE ENTRY	CRITICAL	VISUAL	100%	APP.DRG	APP. APP.DRG	Q.A. REPORT		P	V	V	
		D) STRAIGHTNESS / WAVINESS	CRITICAL	VISUAL	100%					P	V	V	
		E) GASKET ARGMNT.	CRITICAL	VISUAL	100%	APP.DRG	APP.DRG	Q.A. REPORT		P	V	V	
		F) DEBURRING	CRITICAL	VISUAL	100%	APP.DRG	APP.DRG	Q.A. REPORT		P	V	V	
		G) WELDING	CRITICAL	VISUAL	100%	APP.DRG	APP.DRG	Q.A. REPORT		P	V	V	
		H) REMOVAL OF WELDING SLAGS	CRITICAL	VISUAL	100%	APP.DRG	APP.DRG	Q.A. REPORT		P	V	V	

		LEGEND : * RECORDS, INDENTIFIED WITH `TICK' SHALL BE ESSENTIALLY INCLUDED BY CONTRACTOR IN QA DOCUMENTATION. ** M : MANUFACTURER/ SUBCONTRACTOR C: CONTRACTOR/ NOMINATED INSPECTION AGENCY E : END USER INDICATE `P' PERFORM, `W' WITNESS AND `V' VERIFICATION AS APPROPRIATE "CHP" END USER SHALL IDENTIFIED IN COLUMN `E'	FOR END USER :
MANUFACTURER /SUBCONTRACTOR	CONTRACTOR		
SIGNATURE			REVIEWED BY

DOC. NO.

NAME & SIGN OFAPPROVING AUTHORITY WITH SEAL

	MANUFACTURER'S NAME & ADDRESS	MANUFACTURING QUALITY PLAN	
		ITEM : LOCAL INSTRUMENT ENCLOSURE & LOCAL INSTRUMENT RACK	QP Ref NO.: CE/416/LIE-LIR/QP REV. : 00 DT. : 11.09.2026 PAGE : 05 OF 06

S. NO.	COMPONENTS & OPERATIONS	CHARACTERISTICS	CLASS	TYPE OF CHECK	QUANTUM OF CHECK	REFERENCE DOCUMENT	ACCEPTANCE NORMS	FORMAT OF RECORD		AGENCY M	C	E	REMARKS
1	2	3	4	5	6	7	8	9	D*	**10			11
2	PRETREATMENT (7 TANK PROCESS)	A) DEGREASING	CRITICAL	VISUAL	100%	IS- 6005/F.S.	IS- 6005/F.S.	Q.A. REPORT		P	V	V	
		B) DERUSTING	CRITICAL	VISUAL	100%	IS- 6005/F.S.	IS- 6005/F.S.	Q.A. REPORT		P	V	V	
		C) PHOSPHATISING	CRITICAL	MEASUREMENT	100%	IS- 6005/F.S.	IS- 6005/F.S.	Q.A. REPORT		P	V	V	
		D) PASSIVATION	CRITICAL	VISUAL	100%	IS- 6005/F.S.	IS- 6005/F.S.	Q.A. REPORT		P	V	V	
3	SURFACE PREPARA- -TION & PAINTING	A) PRIMER(2 COATS)	CRITICAL	VISUAL	100%	APP.DRG	APP.DRG	Q.A.REPORT		P	V	V	
		B) SURFACER	CRITICAL	VISUAL	100%	APP.DRG	APP.DRG	Q.A.REPORT		P	V	V	
		C) FINAL PAINTING	CRITICAL	VISUAL	100%	APP.DRG	APP.DRG	Q.A.REPORT		P	V	V	
		D) THICKNESS	CRITICAL	MEASUREMENT	SAMPLE	APP.DRG	APP.DRG	Q.A.REPORT		P	V	V	
4	ELECTRICAL & MECH.	A) CHECK ARRANGE / LAYOUT OF COMP. & MOUNTING	CRITICAL	VISUAL	100%	APP.DRG	APP.DRG	Q.A.REPORT		P	V	V	
		B) WIRE CLAMPING & FERULING	CRITICAL	VISUAL	100%	APP.DRG	APP.DRG	Q.A.REPORT		P	V	V	
		C) INTERCONNECTION B/W COMPONENT	CRITICAL	VISUAL	100%	APP.DRG	APP.DRG	Q.A.REPORT		P	V	V	
		D)LUG SIZE&CRIMPING	CRITICAL	VISUAL	100%	APPD. APP.DRG	F.S./APP.DRG	Q.A.REPORT		P	V	V	
		E) COMPONENT IDENTIFICATION	CRITICAL	VISUAL	100%	APPD. APP.DRG	APP.DRG	Q.A.REPORT		P	V	V	
		F) WIRE SIZE	MAJOR	VISUAL	SAMPLE	IS-694 / APP.DRG	IS-694 / APP.DRG	M.T.C./QA REP.		P	V	V	
		G) NAME PLATES	CRITICAL	VISUAL	100%	APP.DRG	APP.DRG	Q.A.REPORT		P	V	V	
		H) PIPING	MAJOR	VISUAL	100%	APP.DRG	APP.DRG	Q.A.REPORT		P	V	V	

		LEGEND : * RECORDS, INDENTIFIED WITH `TICK' SHALL BE ESSENTIALLY INCLUDED BY CONTRACTOR IN QA DOCUMENTATION. ** M : MANUFACTURER/ SUBCONTRACTOR C: CONTRACTOR/ NOMINATED INSPECTION AGENCY E : END USER INDICATE `P' PERFORM, `W' WITNESS AND `V' VERIFICATION AS APPROPRIATE "CHP" END USER SHALL IDENTIFIED IN COLUMN `E'	FOR END USER :	DOC. NO.
MANUFACTURER /SUBCONTRACTOR	CONTRACTOR			
SIGNATURE			REVIEWED BY	NAME & SIGN OFAPPROVING AUTHORITY WITH SEAL

	MANUFACTURER'S NAME & ADDRESS	MANUFACTURING QUALITY PLAN	
		ITEM : LOCAL INSTRUMENT ENCLOSURE & LOCAL INSTRUMENT RACK	QP Ref NO.: CE/416/LIE-LIR/QP REV. : 00 DT. : 11.09.2026 PAGE : 06 OF 06

S. NO.	COMPONENTS & OPERATIONS	CHARACTERISTICS	CLASS	TYPE OF CHECK	QUANTUM OF CHECK	REFERENCE DOCUMENT	ACCEPTANCE NORMS	FORMAT OF RECORD		AGENCY M	C	E	REMARKS
1	2	3	4	5	6	7	8	9	D*	**10			11
D)	***FINAL INSPECTION***												
1	A) VERIFICATION OF COMPONENTS /RATING/ ARRANGEMENTS/ LOCATION FOR EASY ACCESSABILITY AND MAINTENANCE .		CRITICAL	VISUAL	100%/SAM.	APP.DRG	APP.DRG	Q.A. REPORT		P	W	W	
	B) COMPLETENESS OF WIRING ,TUBING/ PIPING		CRITICAL	VISUAL	100%/SAM.	APP.DRG	APP.DRG	Q.A. REPORT		P	W	W	
	C) TERMINAL ARRANGEMENTS,SPARE TER- -MINALS , EARTH BUS TIN PLATED COPPER)		CRITICAL	VISUAL	100%/SAM.	APP.DRG	APP.DRG	Q.A. REPORT		P	W	W	
	D) PAINT SHADE,THICKNESS & ADHESION		CRITICAL	MEASUREMENT	SAMPLE	APP.DRG	APP.DRG	Q.A. REPORT		P	W	W	
	E) DOOR ALIGNMENT		MAJOR	VISUAL	100%/SAM.	APP.DRG	APP.DRG	Q.A. REPORT		P	W	W	
	F) GENERAL APPEARENCE (STRAIGHTNESS, FREE FROM SCRATCHES, BENDS, DENTS AND SHEET THICKNESS)		MAJOR	VISUAL	100%/SAM.	APP.DRG	APP.DRG	Q.A. REPORT		P	W	W	
	G) HYDROSTATIC TEST FOR ASSEMBLY. (1.5 TIMES RATED PRESSURE)		CRITICAL	MECHANICAL	100%	APP.DRG	APP.DRG/ NO LEAK/ PRESSURE DROP	Q.A. REPORT		P	W	W	PERFORMED BY VENDOR 100 % BHEL WITNESS ON 10%
	(PNEUMATIC TEST FOR PURGING LINES (NO LEAKAGED WITH SOAP SOLUTION)												
2	OVERALL FINISH		MAJOR	VISUAL	100%/SAM.	APP.DRG	APP.DRG	Q.A. REPORT		P	W	W	
3	CONTINUITY TEST		MAJOR	FUNCTIONAL	100%/SAM.	APP.DRG	APP.DRG	Q.A. REPORT		P	W	W	
4	IR TEST		MAJOR	MEASUREMENT	100%/SAM.	APP.DRG	APP.DRG	Q.A. REPORT		P	W	W	
5	HV TEST		MAJOR	MEASUREMENT	100%/SAM.	APP.DRG	APP.DRG	Q.A. REPORT		P	W	W	
6	FUNCTIONAL TEST		MAJOR	FUNCTIONAL	100%/SAM.	APP.DRG	APP.DRG	Q.A. REPORT		P	W	W	
7	IP TEST	TYPE TEST	MAJOR	VERIFICATION	100%/SAM.	APP.DRG	APP.DRG	Q.A. REPORT		P	V	V	

M. T.C. = MANUFACTURER'S / MATERIAL TEST CERTIFICATE
F.S. = FACTORY STANDARD
NOTE :- CUSTOMER / INSPECTION AGENCY / END USER MAY DO INSPECTION ON SAMPLE BASIS

Q.A.REP.= QUALITY ASSURANCE REPORT
APP. APP.DRG = APPROVED DRAWING
SAM. = SAMPLE

LEGEND :
* RECORDS, INDENTIFIED WITH `TICK' SHALL BE ESSENTIALLY INCLUDED BY CONTRACTOR IN QA DOCUMENTATION.
** M : MANUFACTURER/ SUBCONTRACTOR
C: CONTRACTOR/ NOMINATED INSPECTION AGENCY E : END USER
INDICATE `P' PERFORM, `W' WITNESS AND `V' VERIFICATION
AS APPROPRIATE "CHP" END USER SHALL IDENTIFIED IN COLUMN `E'

MANUFACTURER /SUBCONTRACTOR	CONTRACTOR	REVIEWED BY	NAME & SIGN OFAPPROVING AUTHORITY WITH SEAL
SIGNATURE			

PROJECT: RATE CONTRACT FOR LIE/LIR (NON –NTPC PROJECTS)

CUSTOMER: M/s TNPGCL, ADANI POWER

COPY RIGHT AND CONFIDENTIAL

THE INFORMATION ON THIS DOCUMENT IS THE PROPERTY OF BHARAT HEAVY ELECTRICALS LIMITED. IT MUST NOT BE USED DIRECTLY OR INDIRECTLY IN ANY WAY DETRIMENTAL TO THE INTEREST OF THE COMPANY.

TECHNICAL SPECIFICATION
FOR
LOCAL INSTRUMENT ENCLOSURE / RACKS
(LIE / LIR)

REVISIONS :	APPROVED BY		
	AMITKUMAR SHARMA		
	PREPARED BY	ISSUED	DATE
	RAJESH LINGUTLA	416	21/09/26

COPY RIGHT AND CONFIDENTIAL

THE INFORMATION ON THIS DOCUMENT IS THE PROPERTY OF BHARAT HEAVY ELECTRICALS LIMITED . IT MUST NOT BE USED DIRECTLY OR INDIRECTLY IN ANY WAY DETRIMENTAL TO THE INTEREST OF THE COMPANY.

CONTENTS

SL NO	DESCRIPTION	REFERENCE NO
01	SCOPE OF SUPPLY	CE/416/NON-NTPC/RC/LIE-LIR/SOS REV. 00 ,SHEETS 05
02	TECHNICAL REQUIREMENTS	CE/416/ LIELIR/TR REV. 00, SHEETS 11
03	HOOKUP SCHEMES	CE/416/ NON-NTPC/RC/HUP REV. 00 ,SHEETS 33
04	DRAWINGS FOR LIE-LIR	CE/416/LIE/LIR/OGA1 SHEETS 04
05	VENDOR LIST FOR COMPONENTS	CE/416/ NON-NTPC/RC/LIE-LIR /VL REV. 00 , SHEETS 03
06	TYPICAL QUALITY CHECK LIST	CE/416/LIE-LIR/QP REV 00, SHEETS 06

PROJECT: RATE CONTRACT FOR LIE/LIR

CUSTOMER: M/s TNPGCL, ADANI POWER

COPY RIGHT AND CONFIDENTIAL

THE INFORMATION ON THIS DOCUMENT IS THE PROPERTY OF BHARAT HEAVY ELECTRICALS LIMITED. IT MUST NOT BE USED DIRECTLY OR INDIRECTLY IN ANY WAY DETRIMENTAL TO THE INTEREST OF THE COMPANY.

SCOPE OF SUPPLY
FOR
LOCAL INSTRUMENT ENCLOSURE / RACKS
(LIE / LIR)

REVISIONS :	APPROVED BY		
	AMITKUMAR SHARMA		
	PREPARED BY	ISSUED	DATE
	RAJESH LINGUTLA	416	21/09/26

COPY RIGHT AND CONFIDENTIAL

THE INFORMATION ON THIS DOCUMENT IS THE PROPERTY OF BHARAT HEAVY ELECTRICALS LIMITED . IT MUST NOT BE USED DIRECTLY OR INDIRECTLY IN ANY WAY DETRIMENTAL TO THE INTEREST OF THE COMPANY.

Scope of supply

The Scope of supply is as per Technical requirements attached with this specification. Vendor shall quote for each line item of the Table A & B. The unit rate shall be valid until the completion of the contracts. For this purpose, vendors shall maintain MS Excel file indicating total Bill of materials Table A & B.

TABLE: A

S.NO	HUP Ref CE/416/NON-NTPC/RC/HUP	Material Code	Description	Total Quantity	Unit
1		PR0830000020	LIE TYPEA	61	NO
2		PR0830000038	LIE TYPE B	305	NO
3		PR0830000046	LIE TYPE C	125	NO
4		PR0830000291	LIR TYPE D	48	NO
5		PR0830000054	LIR TYPE A	151	NO
6		PR0830000062	LIR TYPE B	121	NO
7		PR0830000070	LIR TYPE C	93	NO
8	2	PR0830000089	Hook up PT/PS 9000 Steam and Water	150	NO
9	4	PR0830000097	Hook up DPT/FT/LT 9000 Steam and Water	60	NO
10	6	PR0830000402	HOOK UP SCHEME PT/PS 1/2" P22 6000CL	78	NO
11	8	PR0830000356	HOOK UP SCHEME DPT/DPS 1/2" P22 6000CL	60	NO
12	10	PR0830000100	Hook up PT/PS 6000 Steam and Water	180	NO
13	12	PR0830000119	HOOK UP DPT/FT/LT STEAM AND WATER A106 6K	120	NO
14	14	PR0830000127	Hook up PT/PS 3000 water	1015	NO
15	16	PR0830000135	Hook up DPT/DPS 3000 water	670	NO
16	18	PR0830000305	Hook up PT/PS 3000 Sea Water 1/2" SS 316L	12	NO
17	20	PR0830000216	Hook up DPT/DPS Sea water SS316 L	18	NO
18	22	PR0830000151	Hook up PT/PS Clean air Top entry 3/4"	6	NO
19	24	PR0830000143	Hook up PT/PS Clean Air service	540	NO
20	26	PR0830000194	Hook up DPT/FT/DPS Flue gas	610	NO
21	28	PR0830000186	Hook up PT/PS Flue gas - F22	6	NO
22	30	PR0830000208	Hook up DPT/FT/LT Flue gas -F22	6	NO
23	32	PR0830000003	Hook up for Air Purging	469	NO
24	32	PR0830000259	Hook up for Continuous Purging	1542	NO
25	32	PR0830000267	Hook up for Intermittent Purging	469	NO
26		PR0450000290	Temp. Transmitter Junction Box - Type A	1	NO
27		PR0450000303	Temp. Transmitter Junction Box - Type B	1	NO
28		PR0450000311	Temp. Transmitter Junction Box - Type C	1	NO
29		PR0900007443	Hardware for Loose Schemes as per Annexure-II	1	ST

Note:

1. Exterior **Colour:** RAL 7032.Interior **Finish:** Brilliant white glossy finish, two coats, or RAL 7035, with fire-resistant paint. The total paint thickness shall be **80 to 100 microns**. The final colour shall be decided during detailed engineering.
2. **IP Protection and Type Test: IP65 type test** shall be conducted for the **LIE and the Junction Box (JB) of LIR** for the above project. The relevant type-test reports shall be submitted for BHEL/Customer approval along with the document submission. The submitted test reports shall **not be older than December 2022**.
3. The Vendor shall refer to and correlate the **Scope of Supply** with the applicable **Technical Specifications, Hook-up Schemes, Drawings, and other relevant project documents**.
4. The **tentative NTPC project list** is enclosed herewith as **Table-C**.
5. The **Instrument Schedule/Grouping Document** shall be provided during detailed engineering.
6. The above quantities are tentative and are based on the current business scenario. In the event of any change in project requirements, BHEL shall not be obligated to exhaust the indicated quantities.
7. BHEL reserves the right to increase the quantity by up to 25% during the validity of the rate contract.

COPY RIGHT AND CONFIDENTIAL
THE INFORMATION ON THIS DOCUMENT IS THE PROPERTY OF BHARAT HEAVY ELECTRICALS LIMITED . IT MUST NOT BE USED DIRECTLY OR INDIRECTLY IN ANY WAY DETRIMENTAL TO THE INTEREST OF THE COMPANY.

HARDWARE LOOSE SCHEMES- ANNEXURE-II

TABLE: B-1/2

SL. NO.	ITEM DESCRIPTION	QUANTITY	UNIT
1	TWO VALVE MANIFOLD WITH VENT PLUG PORT SIZE:1/2" NPTF/MATL.SS316 PR.TESTING:9000 PSI	10	NO
2	TWO VALVE MANIFOLD WITH VENT PLUG PORT SIZE:1/2" NPTF/MATL.SS316 PR.TESTING:6000 PSI	10	NO
3	TWO VALVE MANIFOLD WITH VENT PLUG PORT SIZE:1/2"NPTF/BODY:SS316 PR.TESTING:3000PSI	90	NO
4	FIVE VALVE MANIFOLD WITH VENT PLUG PORT SIZE:1/2" NPTF/MATL.SS316 PR.TESTING:9000 PSI	10	NO
5	FIVE VALVE MANIFOLD WITH VENT PLUG PORT SIZE:1/2" NPTF/MATL.SS316 PR.TESTING:6000 PSI	10	NO
6	FIVE VALVE MANIFOLD WITH VENT PLUG PORT SIZE:1/2" NPTF/MATL.SS316 PR.TESTING:3000 PSI	20	NO
7	THREE VALVE MANIFOLD WITH VENT PLUG PORT SIZE:1/2"NPTF MATL:SS316 PR.TESTING:3000PSI	20	NO
8	FORGED GLOBE VALVE BODY:ASTM A182 F316H/STEM:ASTM A182 GR.F6A/SIZE:1/2"NB-SW/CL:3000SPL	20	NO
9	FORGED GLOBE VALVE BODY:ASTM A182-F22/STEM:ASTM A182 GR.F6A/ SIZE:1/2"NBSW/CL:3000SPL	20	NO
10	FORGED GLOBE VALVE BODY:ASTM A182-F22/STEM:ASTM A182 GR.F6A/ SIZE:1/2"NBSW/CL:2500SPL	20	NO
11	FORGED GLOBE VALVE BODY:ASTM A105/STEM:ASTM A182 GR.F6A SIZE:1/2"NBSW/CL:3000	20	NO
12	FORGED GLOBE VALVE BODY:ASTM A105/STEM:ASTM A182 GR.F6A SIZE:1/2"NB-SW/CL:800	30	NO
13	FORGED GLOBE VALVE BODY:ASTM A182 F91/STEM:ASTM A182 GR.F6A/SIZE:1/2"NB-SW/CL:3000SPL	20	NO
14	TUBE FITTING TYPE:DFDC MATL:SS316 SIZE:1/2"NPTM X TO SUIT 1/2"OD SS TUBE	150	NO
15	TEE-TUBE UNION MATL: SS316 SIZE : OD OF 1/2" NB PIPE X TO SUIT 1/2" OD SS TUBE	20	NO
16	TEE-TUBE UNION MATL: SS316 SIZE : OD OF 3/4" NB PIPE X TO SUIT 1/2" OD SS TUBE	20	NO
17	PURGE ROTAMETER PROCESS CONN:1/4"NPTF AS PER SPECIFICATION	5	NO
18	AIR FILLTER REGULATOR PROCESS CONN:1/2"NPTF AS PER SPECIFICATION	5	NO
19	NIPPLE MAT: ASTM A106 Gr.B SIZE: 1/2" NB SCH 80 / LENGTH = 100 mm ONE END - 1/2" NTPM ,OTHER END : PLAIN CAP/ ASTM A 105 -SIZE - 1/2" NPTF	70	NO
20	Bulk Head Union Material:Brass Size:1/4"NPTF	70	NO
21	Copper Tube in Coils-light brown Tempered:PVC Coated As per ASTM B 75 /: 1/4" OD X 1 MM Thick	200	M
22	Brass Male Connector DFDC Size:1/4" to suit 1/4" Copper tube	200	NO
23	NUT & TAIL FITTING + SS 304 WASHERS (02 NOS.) MAT: A 105 / SIZE : ID=9 mm / OD=19 mm NUT: 3/4" BSPF	20	NO
24	FORGED ADAPTER MAT: ASTM A105 1/2" NPTM X 3/4" BSPM AS PER CL- 6000 ANSI B 16.11	20	NO

Unit rate of each item for Mandatory Spare to be provided in the offer.

COPY RIGHT AND CONFIDENTIAL

THE INFORMATION ON THIS DOCUMENT IS THE PROPERTY OF BHARAT HEAVY ELECTRICALS LIMITED . IT MUST NOT BE USED DIRECTLY OR INDIRECTLY IN ANY WAY DETRIMENTAL TO THE INTEREST OF THE COMPANY.

HARDWARE LOOSE SCHEMES- ANNEXURE-II

TABLE: B-2/2

SL. NO.	ITEM DESCRIPTION	QUANTITY	UNIT
25	NUT & TAIL FITTING + SS 304 WASHERS (02 NOS.) MAT: A 105 / SIZE : ID=7 mm / OD=13 mm NUT: 1/2" BSPF	160	NO
26	FORGED ADAPTER MAT: ASTM A105 1/2" NPTM X 1/2" BSPM CL - 3000 AS PER ANSI B 16.11	160	NO
27	COUPLING MAT: ASTM A105 GALVANISED TO 10/15 MICRONS SIZE: 1/2" NPTF/ PR. TESTING: 800 PSI	450	NO
28	ELBOW MAT: ASTM A105 GALVANISED TO 10/15 MICRONS SIZE: 1/2" NPTF/ PR. TESTING: 800 PSI	225	NO
29	EQUAL TEE MAT: ASTM A105 GALVANISED TO 10/15 MICRONSSIZE: 1/2" NPTF/ PR. TESTING: 800 PSI	60	NO
30	COUPLING MAT: ASTM A105 GALVANISED TO 10/15 MICRONS SIZE: 1" NPTF/ PR. TESTING: 800 PSI	20	NO
31	ELBOW MAT: ASTM A105 GALVANISED TO 10/15 MICRONS SIZE: 1" NPTF/ PR. TESTING: 800 PSI	12	NO
32	EQUAL TEE MAT: ASTM A105 GALVANISED TO 10/15 MICRONS SIZE: 1" NPTF / PR. TESTING: 800 PSI	6	NO
33	REDUCER MAT: ASTM A105 GALVANISED TO 10/15 MICRONS SIZE: 1" NPTF TO 1/2" NPTF/ PR. TESTING: 800 PSI	12	NO
34	UNEQUAL TEE/MAT: ASTM A105 GALVANISED TO 10/15 MICRONS SIZE: 2 X 1" NPTF X 1/2" NPTF / PR. TESTING: 800 PSI	5	NO
35	THREE PIECE UNION, MATL: ASTM A105/GALVANISED TO 10/15 MICRONS/SIZE: 1" NPTF, PRESSURE RATING: 800 PSI	5	NO
36	THREE PIECE UNION, MATL: ASTM A105/GALVANISED TO 10/15 MICRONS/SIZE: 1/2" NPTF, PRESSURE RATING: 800 PSI.	110	NO
37	GI PIPE-1/2" NB Heavy Grade as per IS 1239 standard, threaded ends (1/2" NPT) to be protected. Running length - 6mtrs	2400	M
38	GI PIPE-1" NB Heavy Grade as per IS 1239 standard, threaded ends (1" NPT) to be protected/ Running length - 6mtrs	120	M
39	"Gate Valve Rating:ASA 150 LBS Body:ASTM/ B62 Trim:SS 304 Size:1/2"NPTF."	5	NO
40	PIPE A106 GRB 2" NB SCH 40	20	M
41	U CLAMP - TO SUIT 1/2" NB PIPE WITH NUTS AND WASHERS MAT: CS, GALVANISED TO 10/15 MICRONS	2400	NO
42	U CLAMP - TO SUIT 3/4" NB PIPE WITH NUTS AND WASHERS CS GALVANISED TO 10/15 MICRONS	850	NO
43	U CLAMP - TO SUIT 1" NB PIPE WITH NUTS AND WASHERS CS GALVANISED TO 10/15 MICRONS	110	NO
44	Funnel As per drawing ref:CE/416/FUNNEL/	8	NO
45	Forged Coupling / As per ANSI B16.11 / Mat: ASTM A105 Size: 1/2" NB-SW / CLASS-3000	350	NO
46	Forged Coupling / As per ANSI B16.11 / Mat: ASTM A105 Size: 3/4" NB-SW / CLASS-3000	300	NO
47	Forged Adaptor / As per ANSI B16.11 / Mat: ASTM A105 Size: 1/2"NPTM x 1/2" NB SW / CLASS-3000	4	NO
48	Forged Unequal Tee / As per ANSI B16.11 / Mat: ASTM A105 Size: 2 x 3/4"NB-SW x 1/2" NPTF / CLASS-3000	75	NO
49	FORGED EXPANDER / AS PER ANSI B 16.11, MATERIAL: ASTM A105 SIZE: 1/2"NPTM x 3/4" NB-SW / CLASS-3000 LBS	20	NO
50	Forged Expander / As per ANSI B16.11 / Mat: ASTM A 105 Size: OD 22 mm x 3/4" NB SW / CLASS-3000	25	NO

Unit rate of each item for Mandatory Spare to be provided in the offer.

COPY RIGHT AND CONFIDENTIAL
THE INFORMATION ON THIS DOCUMENT IS THE PROPERTY OF BHARAT HEAVY ELECTRICALS LIMITED . IT MUST NOT BE USED DIRECTLY OR INDIRECTLY IN ANY WAY DETRIMENTAL TO THE INTEREST OF THE COMPANY.

Table: C

List of Tentative NON-NTPC Projects as below

S.No	NON-NTPC Project	Tentative Delivery Dates
1	TNPGCL North Chennai FGD Package 1 X 800MW STPS Stage-III	30.01.2027.
2	Adani MUTPPL Mirzapur Adani 2 X 800MW USTPP	Unit#1- 30.03.2027, Unit#2- 30.03.2027
3	Adani Mahan Phase-III 2 X 800MW USTPP	Unit#1- 30.12.2027, Unit#2- 30.03.2028
4	Adani Annupur Phase-I 2 X 800MW USTPP	Unit#1- 30.12.2027, Unit#2- 30.03.2028

Project Wise tentative break up Quantity enclosed as Annexure-B.

Note: Please note that the **projects, quantities, and delivery schedules indicated are tentative** and are based on the current business scenario. In the event of any change in the **number of projects, quantities, or delivery schedules**, the same shall be accommodated by the bidder **without any additional cost or price implication to BHEL**.

ANNEXURE-B

				Quantity for various Non-NTPC Projects					
S.NO	HUP Ref CE/416/NON-NTPC/RC/HUP	Material Code	Description	North Chennai FGD Package 1 X 800MW STPS Stage-III	MUTPPL Mirzapur Adani 2 X 800MW USTPP	Adani Mahan Phase-III 2 X 800MW USTPP	Adani Annupur Phase-I 2 X 800MW USTPP	Total Quantity	Unit
1		PR0830000020	LIE TYPEA	1	20	20	20	61	NO
2		PR0830000038	LIE TYPE B	5	100	100	100	305	NO
3		PR0830000046	LIE TYPE C	5	40	40	40	125	NO
4		PR0830000291	LIR TYPE D	0	16	16	16	48	NO
5		PR0830000054	LIR TYPE A	1	50	50	50	151	NO
6		PR0830000062	LIR TYPE B	1	40	40	40	121	NO
7		PR0830000070	LIR TYPE C	3	30	30	30	93	NO
8	2	PR0830000089	Hook up PT/PS 9000 Steam and Water	0	50	50	50	150	NO
9	4	PR0830000097	Hook up DPT/FT/LT 9000 Steam and Water	0	20	20	20	60	NO
10	6	PR0830000402	HOOK UP SCHEME PT/PS 1/2" P22 6000CL	0	26	26	26	78	NO
11	8	PR0830000356	HOOK UP SCHEME DPT/DPS 1/2" P22 6000CL	0	20	20	20	60	NO
12	10	PR0830000100	Hook up PT/PS 6000 Steam and Water	0	60	60	60	180	NO
13	12	PR0830000119	HOOK UP DPT/FT/LT STEAM AND WATER A106 6K	0	40	40	40	120	NO
14	14	PR0830000127	Hook up PT/PS 3000 water	25	330	330	330	1015	NO
15	16	PR0830000135	Hook up DPT/DPS 3000 water	10	220	220	220	670	NO
16	18	PR0830000305	Hook up PT/PS 3000 Sea Water 1/2" SS 316L	0	4	4	4	12	NO
17	20	PR0830000216	Hook up DPT/DPS Sea water SS316 L	0	6	6	6	18	NO
18	22	PR0830000151	Hook up PT/PS Clean air Top entry 3/4"	0	2	2	2	6	NO
19	24	PR0830000143	Hook up PT/PS Clean Air service	30	170	170	170	540	NO
20	26	PR0830000194	Hook up DPT/FT/DPS Flue gas	10	200	200	200	610	NO
21	28	PR0830000186	Hook up PT/PS Flue gas - F22	0	2	2	2	6	NO
22	30	PR0830000208	Hook up DPT/FT/LT Flue gas -F22	0	2	2	2	6	NO
23	32	PR0830000003	Hook up for Air Purging	19	150	150	150	469	NO
24	32	PR0830000259	Hook up for Continuous Purging	42	500	500	500	1542	NO
25	32	PR0830000267	Hook up for Intermittent Purging	19	150	150	150	469	NO
26		PR0450000290	Temp. Transmitter Junction Box - Type A	1	0	0	0	1	NO
27		PR0450000303	Temp. Transmitter Junction Box - Type B	1	0	0	0	1	NO
28		PR0450000311	Temp. Transmitter Junction Box - Type C	1	0	0	0	1	NO
29		PR0900007443	Hardware for Loose Schemes as per Annexure-II	0	1	0	0	1	NO

PROJECT: RATE CONTRACT FOR LIE/LIR

CUSTOMER: M/s TNPGCL, ADANI POWER

COPY RIGHT AND CONFIDENTIAL

THE INFORMATION ON THIS DOCUMENT IS THE PROPERTY OF BHARAT HEAVY ELECTRICALS LIMITED. IT MUST NOT BE USED DIRECTLY OR INDIRECTLY IN ANY WAY DETRIMENTAL TO THE INTEREST OF THE COMPANY.

TECHNICAL REQUIREMENT
FOR
LOCAL INSTRUMENT ENCLOSURE / RACKS
(LIE / LIR)

REVISIONS :	APPROVED BY		
	AMITKUMAR SHARMA		
	PREPARED BY	ISSUED	DATE
	RAJESH LINGUTLA	416	21/09/26

TECHNICAL REQUIREMENTS FOR TRANSMITTER ENCLOSURES AND TRANSMITTER RACKS:

I. TRANSMITTER ENCLOSURES:

1. The Transmitter enclosures (Closed type) are provided for mounting Transmitters etc. and located in Boiler area. This shall be constructed of 3 mm thick CRCA material. These shall confirm to IP 65 protection class.

2. The Transmitter Enclosures shall be of following sizes (in millimeters).

   Type A - 1450(W) x 1000(D) x 2200(H) (For 5 to 6 Transmitters)
   Type B - 1100 (W) x 1000(D) x 2200(H) (Between 3 to 4 Transmitters)
   Type C - 800(W) x 1000(D) x 2200(H) (For 1 to 2 Transmitters)

3. These shall be reinforced as required to ensure true surfaces and to provide adequate Support for instruments and other equipment mounted therein. Double interlocking doors shall be provided and shall be arranged for maximum possible access to the module interior. Center posts or any member which would reduce access shall not be provided.

4. The doors shall be the three-point locking type constructed of not less than 3 mm steel sheet. Doors shall have concealed quick removal type pinned hinges and locking handles. Enclosure door locks shall accept the same / common key all over the plant. Neoprene material Gaskets shall be used between all mating sections to achieve dust proof enclosure rating for the modules and waterproof and dust tight rating on the Terminal / Junction boxes. All enclosures shall have access doors on Front and Rear sides.

5. Internal wirings between the Transmitters and Terminal / Junction box shall run through flexible dust tight conduits.

6. Anti Vibration Pads of minimum 15 mm thickness shall be provided for supporting each enclosure.

7. Construction of same shall be typically as per enclosed drawing CE/416/LIE/LIR/OGA1.

8. Service Power and Lighting

Each enclosure shall be provided with one receptacle, one light fixture & LED lamps with wire guard and one lighting switch and suitable 2P MCBs ,Six point 6/16A,240V AC Universal type power sockets with switch. Lighting switches may be doors actuated, mounted door. Light switches and receptacles shall be installed inside the enclosure on the wall near the latch side of the enclosure door. Light fixtures shall be installed on the ceilings of the enclosures. Power supplies for miscellaneous devices shall be provided with fuses located within the Enclosure JB. Fuses shall be mounted in fuse blocks. Fuse ratings will be given on electrical schematic diagrams. Power supply shall be 240 V AC.

9. Equipment Installation

a. Enclosures shall be provided to mount field instrument, equipment and accessories. Vendor shall prepare enclosures and piping drawings indicating the layout for each enclosure. Special attention shall be given in the piping layout to avoid air traps in liquid filled piping, or water pockets in piping intended to be dry.

b. Drawings shall indicate the arrangement of all Piping, Valves and Fittings within the enclosures.

10. **Impulse Piping /Tubing**

a. Transmitter enclosures shall be complete with impulse tubing piping, valves from enclosure bulkhead connection to all instruments and necessary drain / blow down connections. The type, sizes, material and pressure class of pipes/tubes, fittings, valves etc. shall be suitable for the intended applications as per the Schemes / Tagging list of Instrument, provided by BHEL.

b. Bulkhead (Thickness shall be not less than 6mm) connection shall be used when instrument piping/ tubing enters the enclosure through Bulkhead plate. Typically through Bulk heads, Impulse pipe entry shall be through Top side of the Enclosure for Steam and Liquid services and for Air / flue gas services, impulse pipe entry shall be from Bottom side.

c. All Instrument Blow down lines, except those measuring vacuum shall be connected to a two-inch header, which is extended through one end of the enclosure and turned downward at other end.

d. Instrument piping and tubing shall be hydrostatically tested at one and one-half times the Design pressure (As per Instrument schedule provided during detail engineering for each project) for that instruments except for vacuum measurement the test pressure will be 8 Kg / Cm2.

11. For Purging :

a. Pneumatic tubing shall be installed for all pneumatic devices, such as Air filter Regulator, Purge rotameters, Isolation valves, distribution air-header etc. Pneumatic tubing shall be installed in a neat workmanlike manner in protected locations with suitable supports. All Pipes / Tubes, which enter or leave the enclosure, shall be terminated on bulkhead fittings in the bulkhead plate. Pneumatic tubing material shall be ½” OD SS316 tubing Flareless SS-Tube fittings shall be used for tubing connections.

b. Instrument tubing schematic, connection and interconnections diagrams shall be furnished.

12. Wiring Within Enclosures and Grounding

Vendor shall furnish general arrangement and wiring diagrams for each transmitter Enclosures for approval.

13. **Enclosure Electrical Junction Box**

a. IP 65 junction box for the termination of all internal wiring shall be provided for each transmitter enclosure.

b. Junction boxes for enclosures shall be fabricated externally on one end of each enclosure assembly to accept field wiring through the top or bottom of the junction box. The Junction box shall be 150 millimeters minimum depth. A hinged door shall give access to the interior of the junction box. Junction boxes shall be provided with LED Lamp lighting. Same key shall be used to lock both Junction box & enclosure.

II. OPEN TYPE TRANSMITTER RACKS:

1. Transmitter racks is provided for mounting transmitters and other accessories, in buildings and closed areas like the power house building / turbine hall.

2. The Transmitter Racks shall be of following sizes (in millimeters).

Type D- 1600(W) x 650(D) x 2200(H) (For 7 to 8 Transmitters)
Type A- 1400(W) x 650(D) x 2200(H) (For 5 to 7 Transmitters)
Type B- 1100(W) x 650(D) x 2200(H) (Between 3 to 4 Transmitters)
Type C- 800(W) x 650(D) x 1600(H) (For 1 to 2 transmitters)

3. Racks shall be constructed on structural members of adequate strength and rigidity to ensure proper support to the mounted instruments and equipment. Racks shall be of welded construction. Each rack shall be provided with a canopy to protect the instrument from dripping water or falling objects.

4. All Valves & Manifolds shall be securely mounted and the structural design shall be such that no item shall interfere with maintenance and removal of instrument, equipment and their accessories.

5. Construction of same shall be typically as per enclosed drawing CE/416/LIE/LIR/OGA1.

6. Service Power and Lighting

a. Each rack shall be provided with one receptacle, one light fixture with wire guard and one lighting switch,LED Lamp. Light fixtures shall be installed on the canopy of the rack.

b. Power supplies for miscellaneous devices shall be provided with fuses located within the rack JB. Fuses shall be mounted in fuse blocks. Fuse ratings will be given on electrical schematic diagrams. Power supply shall be 240 V AC.

7. Equipment Installation

Vendor shall prepare rack fabrication and piping drawings indicating the layout of each Rack. Transmitter/Instruments shall be installed using custom fabricated supports which are attached to the vertical members provided for this purpose. Drawings shall indicate the arrangement of all equipment, piping, valves and fittings within the rack and shall be subject to approval.

8. Impulse Piping / Tubing

a. Transmitter racks shall be complete with impulse tubing piping, valves from enclosure bulkhead connection to all instruments and necessary drain / blow down connections. The type, sizes, material and pressure class of pipes/tubes, fittings, valves etc. shall be suitable for the intended applications as per the Schemes / Tagging list of Instrument, provided by BHEL.
b. Bulkhead (Thickness shall be not less than 6mm) connection shall be used when instrument piping/ tubing enters the enclosure through Bulkhead plate. Typically through Bulk heads, Impulse pipe entry shall be through top side of the Enclosure for Steam and Liquid services.

c. All Instrument Blow down lines, except those measuring vacuum shall be connected to a two-inch drain pipe header, which is extended through one end of the enclosure and turned downward for directing the blow down into drain.

d. Instrument piping and tubing shall be hydrostatically tested at one and one-half times the Design pressure (As per instrument schedule) for that instruments except for vacuum measurement the test pressure will be 8 Kg / Cm2.

9. Wiring of the Racks

a. A fully enclosed IP 65 type junction box shall be provided in each rack for housing the terminal blocks, power supply fuses and other electrical accessories, as required.

b. All electrical connections between instrument and the Terminals in Junction box shall be made. In addition all utility wiring for lighting and service power shall be installed.

c. Vendor shall furnish general arrangement and wiring diagrams for each transmitter rack for approval.

d. Junction Box Requirements

Junction boxes (JBs) for the racks shall be mounted at one end of each assembly and shall be located **inside the rack**. The JBs shall be suitable for accepting field wiring through the **bottom entry**.

The junction boxes shall comply with the following requirements:

1. **Material:** The JB shall be either **CRCA steel, 2 mm thick**, or **FRP, 4 mm thick**, with **IP65 protection**, as decided by BHEL during detailed engineering.
2. **Dimensions:** Minimum JB depth shall be **200 mm**.
3. **Door:** The JB shall be provided with a **hinged door** for access to the interior.
4. **Door Handle/Lock:** The door shall be provided with an **SS door handle**, self-locking arrangement, and a **common key** for all junction boxes.
5. **Gasket:** The door shall be provided with a **synthetic rubber gasket** to ensure the required degree of protection.
6. **Earthing:** An **M6 earthing stud** shall be provided for safety grounding. For CRCA JBs, an internal **copper earth bar of size 25 × 6 mm** shall also be provided.
7. **Terminal Blocks:** TBs shall be provided in **multiples of 12 terminals**. A maximum of **180 TBs**, including spare terminals, shall be provided for signals as per the Instrument Schedule/grouping.
8. **Field Wiring:** Cable/field wiring entry shall be provided through the **bottom of the junction box**.
9. **Material Selection:** The final selection of **CRCA or FRP** junction boxes shall be decided during detailed engineering based on project requirements, **without any price implication to BHEL**.

The selected JB construction shall maintain the specified **IP65 protection** and shall be suitable for the intended installation and environmental conditions.

III. General Requirement applicable to Transmitter Enclosures & Racks :

1. Surface preparation and Painting

a. All sheet metal / exterior steel surfaces shall rust free and scale free and all other residue during fabrication operation such as Oil, grease and salts etc. shall be removed by one or more solvent cleaning methods. Epoxy primer surface shall be applied to all exterior and interior surfaces. Epoxy paint shall be applied to all surfaces and the paint thickness shall be 100 to150 microns. The finish colours for exterior and interior surfaces shall conform to the shades mentioned in scope of supply.

1. Grounding

a. Enclosures and Racks shall be provided with a continuous tinned copper ground bus of minimum 50 mm X 6 mm cross section, extended along the entire length. The ground bus shall have two (2) bolts drilling with GI bolts and nuts at each end.

2. Name plate / Label.

a. Service details and Tag no. shall be engraved on a nameplate or label for each of the Transmitter. These Nameplates or Labels shall be of white non-hygroscopic (Polyamide sheet) material with engraved black lettering on white background. This shall be fixed on to the Impulse Pipe closer to the Transmitter inside the Enclosure / Rack.

3. Wiring Details

a. Interconnecting wiring shall be provided between all electrical devices mounted in the panels and between the devices and terminal blocks if the devices are to be connected to equipment outside the panels by cabling. All interior wiring shall be installed neatly and carefully and shall be terminated at suitable terminal blocks in the Junction box. Sufficient clearance shall be provided for all control and instrumentation leads.

b. Each wire shall be identified at both ends with wire designations as per approved wiring diagram. Interlocking type ferrules shall be used for identification.

c. All wire termination shall be made with insulated sleeve and cage clamp type terminals.

d. All signal wiring shall be done with 2 pair, 0.75 sq. mm annealed tinned copper, pair twisted overall & shielded (Individual & overall), voltage grade 650 V , FRLS PVC sheathed cable and 4 pair, 0.5 sq. mm for PS/DPS. For power supply application, 2.5 sq mm, 1100V cable shall be used.

e. Wires shall be dressed and run in trays or troughs with clamp-on type covers. Wiring may be neatly bunched in-groups by non-metallic cleats or bands. Shield wires shall be terminated on separate terminal blocks.

f. Internal wiring shall follow distinct color coding to segregate different voltage levels viz. 24V DC & 230V AC

g. Junction Box of enclosures will be provided with removable, gasketted cable gland for cable entrance.

4. Fuse Blocks

a. Fuse blocks shall be modular type with bakelite frame and reinforced retaining clips.

5. Terminal Blocks

a. Terminal blocks shall be DIN rail mounted and shall have Cage clamp type connection which shall be maintained for all panels uniformly.

b. The rated cross section of the terminal blocks shall be suitable for connecting 0.5-mm^2/2.5 mm^2. Conductor of suitable voltage grade as specified.

c. Terminal blocks shall be mounted vertically with adequate spacing between rows for routing the cable troughs and to allow adequate free workspace for termination and removal of wires.
d. Terminal blocks shall be provided with white marking strips/self adhesive marker cards.

e. At least 30 percent spare unused terminals shall be provided on each terminal blocks for circuit modifications and for termination of all conductors in a multi conductor control cables.

f. Terminal blocks for termination of electrical power supply shall be type WAGO / PHOENIX make of suitable size with marking strips.

g. The last terminal in a rail-mounted assembly shall be closed with an end plate and end bracket.

IV. Documents to be Submitted by Vendor for Approval :

1. OGA for Transmitter Enclosure and Racks.

2. Layout of Components in each of Transmitter Enclosure and Rack.

3. Electrical diagrams for each Transmitter Enclosure and Rack.

4. Component datasheets

5. Quality plan including Welding Procedure specification and Welder Procedure qualification Record.

6. The quality plan shall include Visual inspection, GA BOM/Layout features verification, Dimensions, Paint shade, thickness measurement, Alignment of sections, component ratings, Wiring, IR, HV, review of TC for instruments / Devices, Accessibility of TBs / Devices, Illumination, Tubing and Degree of protection (Review of type test certificate)

v. Specific requirements

a. Where grouping details are not provided for any instrument, the grouping shall be **finalized and indicated by BHEL during detailed engineering**.

b. SS tubing between the valve manifold and transmitter for each service shall be supplied as per the transmitter model numbers and mounting details provided by BHEL EDN.In case the transmitter model numbers and mounting details are not received from BHEL EDN prior to dispatch, the Vendor shall supply the required SS tubing and tube connectors during commissioning, as per the instructions of BHEL EDN, at no additional cost to BHEL.

c. LIE/LIR/TTE shall be packed in sturdy wooden boxes and covered with tarpaulin sheets to prevent the ingress of water during storage and transportation. Adequate lifting arrangements shall be provided to ensure safe handling and lifting of the packages. In case of any damage to the wooden packing and/or LIE/LIR/TTEs observed at site during transportation, unloading, or handling, the Vendor shall repair or replace the damaged packing and/or LIE/LIR/TTEs at no additional cost to BHEL.**LIE/LIR/TTE LED bulbs shall be packed separately and handed over to the site along with the respective equipment.**

d. BHEL/End customer reserves the right to inspect the item ordered at any stage at vendor's works and if found not meeting the stipulated conditions, material is liable for rejection.

TECHNICAL REQUIREMENTS FOR TEMPERATURE TRANSMITTER ENCLOSURE/JUNCTION BOX:

1. The Junction Box is provided for mounting Pipe Mounted Temperature Transmitters. This shall be constructed of 3.0 mm thick steel sheet material. These shall confirm to IP 65 protection class.

2. The Junction Box/Enclosure shall be of following sizes (in millimeters).

   Type A – 800(W) x 500(D) x 1100(H) (Shall have Four rows of 2" pipe & 180 terminals)
   Type B - 800(W) x 500(D) x 900(H) (Shall have Three rows of 2" pipe & 150 terminals)
   Type C - 800(W) x 500(D) x 600(H) (Shall have Two rows of 2" pipe & 60 terminals)

3. These shall be reinforced as required to ensure true surfaces and to provide adequate support for instruments and other equipment mounted therein. Doors shall be provided and shall be arranged for maximum possible access to from front and back side of enclosures (as applicable) the module interior. Center posts or any member which would reduce access shall not be provided.

4. The doors shall be the three-point locking type constructed of not less than 1.6 mm steel sheet. Doors shall have concealed quick removal type pinned hinges and locking handles. Junction Box door locks shall accept the same / common key all over the plant. Gaskets shall be used between all mating sections to achieve dust proof enclosure rating. All Junction Box shall have access doors on Front side and back side.

5. All the junction boxes shall be suitable for mounting on walls, columns, structures, free standing type etc. The brackets, nuts, bolts, screws, gland and lugs required for erection are in supplier's scope.

6. Vendor shall furnish general arrangement diagrams for each type of transmitter Junction Box for approval.

7. Surface preparation and Painting

   b. All sheet metal / exterior steel surfaces shall rust free and scale free and all other residue during fabrication operation such as Oil, grease and salts etc. shall be removed by one or more solvent cleaning methods. Epoxy primer surface shall be applied to all exterior and interior surfaces. Epoxy paint shall be applied to all surfaces and the paint thickness shall be 100 to150 microns. The finish colours for exterior and interior surfaces shall conform to the shades mentioned in scope of supply.

8. **Terminal Blocks**

   a. Terminal blocks shall be DIN rail mounted and shall have Cage clamp type connection which shall be maintained for all panels uniformly.

b. The rated cross section of the terminal blocks shall be suitable for connecting 0.5-mm^2/2.5 mm^2. Conductor of suitable voltage grade as specified.

c. Terminal blocks shall be mounted vertically with adequate spacing between rows for routing the cable troughs and to allow adequate free workspace for termination and removal of wires.

d. Terminal blocks shall be provided with white marking strips/self adhesive marker cards.

e. Terminal blocks for termination of electrical power supply shall be type WAGO / PHOENIX make of suitable size with marking strips.

f. The last terminal in a rail-mounted assembly shall be closed with an end plate and end bracket.

9. <u>Documents to be Submitted by Vendor for Approval:</u>

a. OGA for Junction Box.

b. Layout of Transmitter in each Type of Junction Box.

c. Quality plan. This will be approved by BHEL / (END USER)

d. The quality plan shall include Visual inspection, GA BOM/Layout features verification, Dimensions, Paint shade, thickness measurement, IR, HV, Accessibility of TBs / Devices, Degree of protection (Review of type test certificate)

PROJECT: RATE CONTRACT FOR LIE/LIR

CUSTOMER: M/s TNPGCL, ADANI POWER

HOOK UP SCHEMES

COPY RIGHT AND CONFIDENTIAL

THE INFORMATION ON THIS DOCUMENT IS THE PROPERTY OF BHARAT HEAVY ELECTRICALS LIMITED. IT MUST NOT BE USED DIRECTLY OR INDIRECTLY IN ANY WAY DETRIMENTAL TO THE INTEREST OF THE COMPANY.

REVISIONS :

APPROVED BY		
AMITKUMAR SHARMA		
PREPARED BY	ISSUED	DATE
RAJESH LINGUTLA	416	21/09/26

REVISION NO	DATE

COPY RIGHT AND CONFIDENTIAL
The information on this document is the property of Bharat Heavy Electricals Limited.
It must not be used directly or indirectly in anyway detrimental to the interest to the Company.

A4 - 10

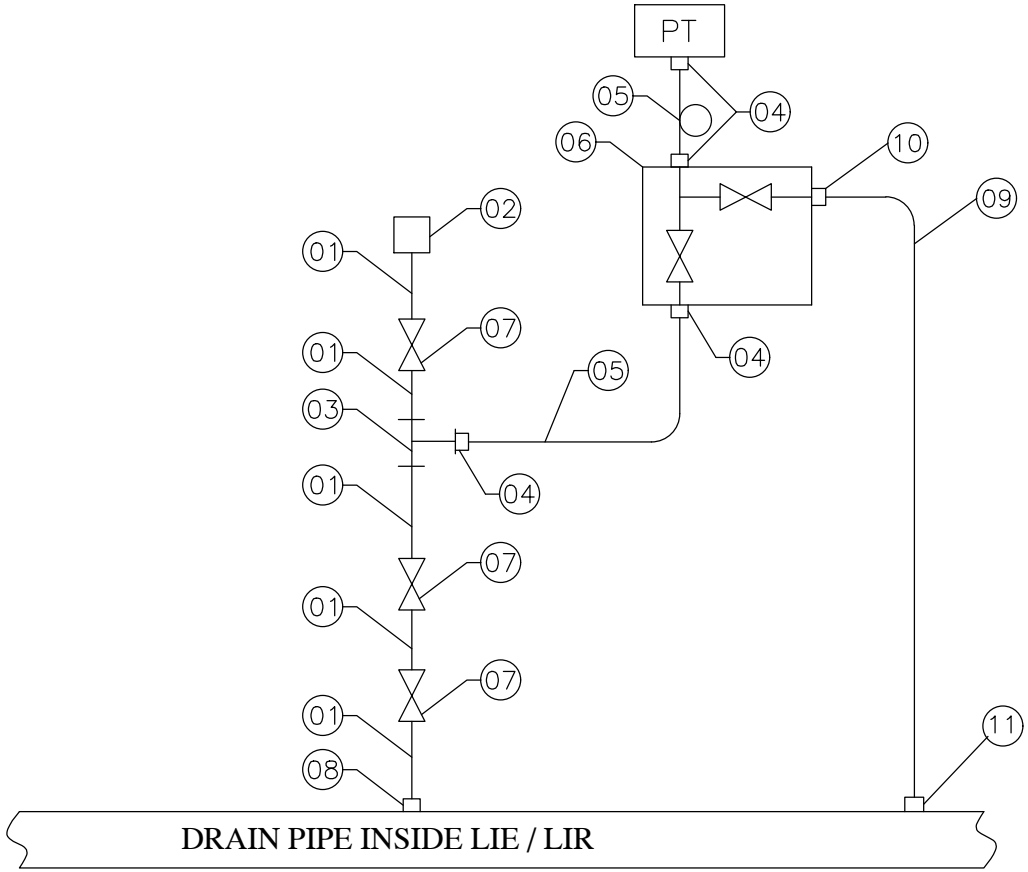

NOTES:

01. "TRANSMITTER BELOW SOURCE"
02. FOR BILL OF MATERIAL REFER PAGE 03 OF 33
03. DRAIN PIPE / 2" NB SCH 80 - A106 Gr. C
04. ITEM NO. 05 SHALL BE FORMED AS A SYPHON FOR SERVICES WITH MEDIUM AS STEAM.

CE/416/NON-NTPC/RC/HUP

REV. NO. 00

ITEM NO.	ITEM DESCRIPTION	QTY / INST. (Nos.)
01	SEAMLESS PIPE MATL.: ASTM A335 P22 SIZE: 1/2" NB-XXS	A/R
02	BULKHEAD COUPLING / AS PER ANSI B16.11 MATL.: ASTM A182 F22 SIZE: 1/2" NB-SW / CL : 9000 LBS	01
03	FORGED UNEQUAL TEE/AS PER ANSI B16.11 MATL.: ASTM A182 F22 SIZE: 2 x 1/2" NB -SW X 1/2" NPTF / CL 9000LBS	01
04	MALE DFDC CONNECTOR MATL.: SS316 SIZE: 1/2" NPTM x TO SUIT 1/2" OD SS TUBE	04
05	SEAMLESS TUBE MATL.: A213 TP 316L SIZE: 1/2" OD x 2.1mm THK.	A/R
06	TWO VALVE MANIFOLD WITH DRAIN PLUG BODY: SS316, BAR STOCK PORT SIZE: 1/2" NPTF / PR. TESTING : 9000PSI	01
07	FORGED GLOBE VALVE BODY: ASTM A182 F22 / STEM: ASTM A182 Gr. F6a SIZE: 1/2" NB-SW / CL 3000 SPL	03
08	HALF COUPLING / AS PER ANSI B 16.11 MATL.: ASTM A182 F22 SIZE: 1/2" NB-SW / CL 9000 LBS	01
09	TUBE MATL: SS 316 SIZE: 8mm OD x 1.0mm THICK	0.15MTR
10	MALE CONNECTOR MATL: SS316 SIZE: 1/4" NPT(M) x TO SUIT 8mm OD SS TUBE / CL: 9000 LBS	01
11	ADAPTER MATL: SS316 SIZE: 1/4" OD NB X TO SUIT 8mm OD SS TUBE / CL: 6000 LBS	01

COPY RIGHT AND CONFIDENTIAL
The information on this document is the property of Bharat Heavy Electricals Limited.
It must not be used directly or indirectly in anyway detrimental to the interest to the Company.

DATE

REVISION NO

REVISION NO	DATE

COPY RIGHT AND CONFIDENTIAL
The information on this document is the property of Bharat Heavy Electricals Limited.
It must not be used directly or indirectly in anyway detrimental to the interest to the Company.

A4 – 10

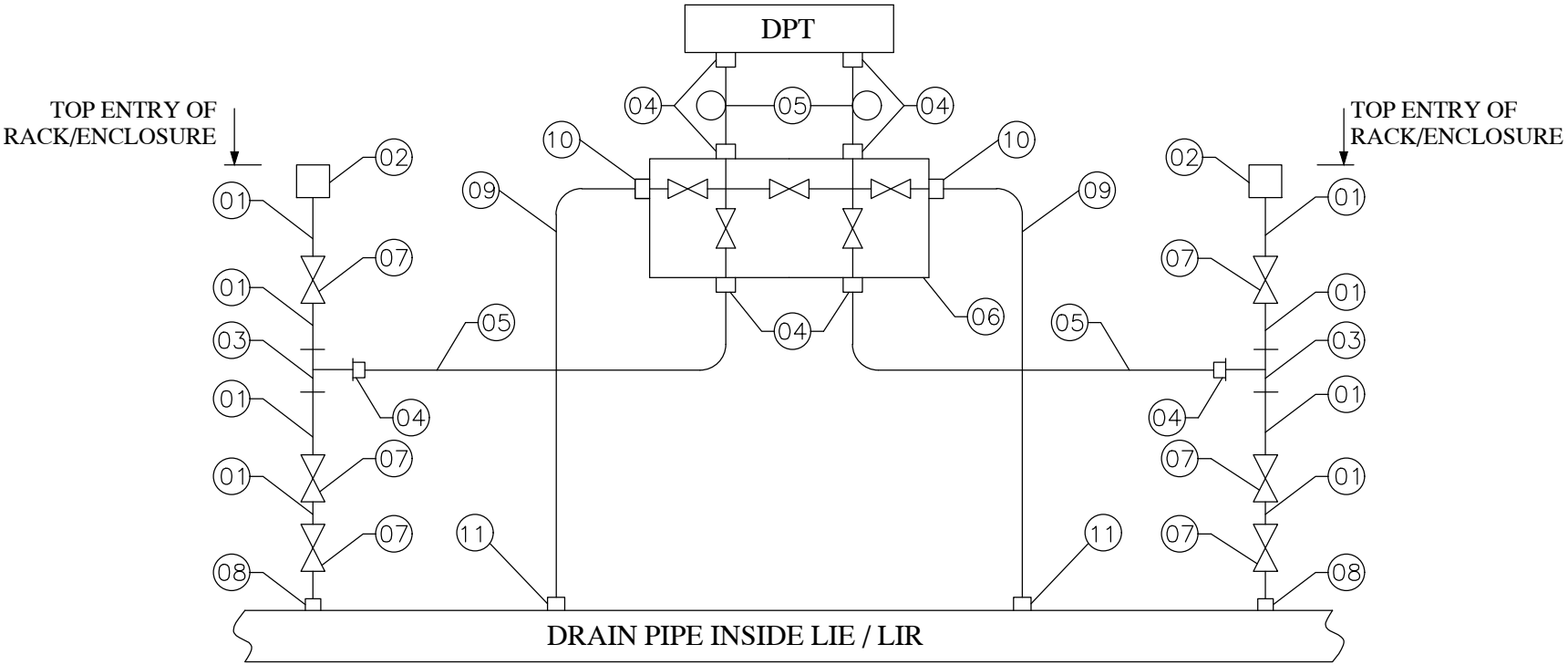

NOTES:

01. "TRANSMITTER BELOW SOURCE"
02. FOR BILL OF MATERIAL REFER PAGE 05 OF 33
03. DRAIN PIPE / 2" NB SCH 80 - A106 Gr. C
04. ITEM NO. 05 SHALL BE FORMED AS A SYPHON FOR SERVICES WITH MEDIUM AS STEAM.

ITEM NO.	ITEM DESCRIPTION	QTY / INST. (Nos.)
01	SEAMLESS PIPE MATL.: ASTM A335 P22 SIZE: 1/2" NB-SCH XXS	A/R
02	BULKHEAD COUPLING / AS PER ANSI B16.11 MATL.: ASTM A182 F22 SIZE: 1/2" NB-SW / CL : 9000 LBS	02
03	FORGED UNEQUAL TEE/AS PER ANSI B16.11 MATL.: ASTM A182 F22 SIZE: 2 x 1/2" NB -SW X 1/2" NPTF / CL 9000LBS	02
04	MALE DFDC CONNECTOR MATL.: SS316 SIZE: 1/2" NPTM x TO SUIT 1/2" OD SS TUBE	08
05	SEAMLESS TUBE MATL.: A213 TP 316L SIZE: 1/2" OD x 2.1mm THK.	A/R
06	FIVE VALVE MANIFOLD WITH DRAIN PLUG BODY: SS316, BAR STOCK. PORT SIZE: 1/2" NPTF / PR. TESTING : 9000PSI	01
07	FORGED GLOBE VALVE BODY: ASTM A182 F22 / STEM: ASTM A182 Gr. F6a SIZE: 1/2" NB-SW / CL 3000SPL	06
08	HALF COUPLING / AS PER ANSI B16.11 MATL.: ASTM A182 F22 SIZE: 1/2" NB-SW / CL 9000 LBS	02
09	TUBE MATL: SS 316 SIZE: 8mm OD x 1.0mm THICK	0.3MTR
10	MALE CONNECTOR MATL: SS316 SIZE: 1/4" NPT(M) x TO SUIT 8mm OD SS TUBE / CL: 9000 LBS	02
11	ADAPTER MATL: SS316 SIZE: 1/4" OD NB X TO SUIT 8mm OD SS TUBE / CL: 6000 LBS	02

COPY RIGHT AND CONFIDENTIAL
The information on this document is the property of Bharat Heavy Electricals Limited.
It must not be used directly or indirectly in anyway detrimental to the interest to the Company.

DATE

REVISION NO

REVISION NO	DATE

COPY RIGHT AND CONFIDENTIAL
The information on this document is the property of Bharat Heavy Electricals Limited.
It must not be used directly or indirectly in anyway detrimental to the interest to the Company.

A4 - 10

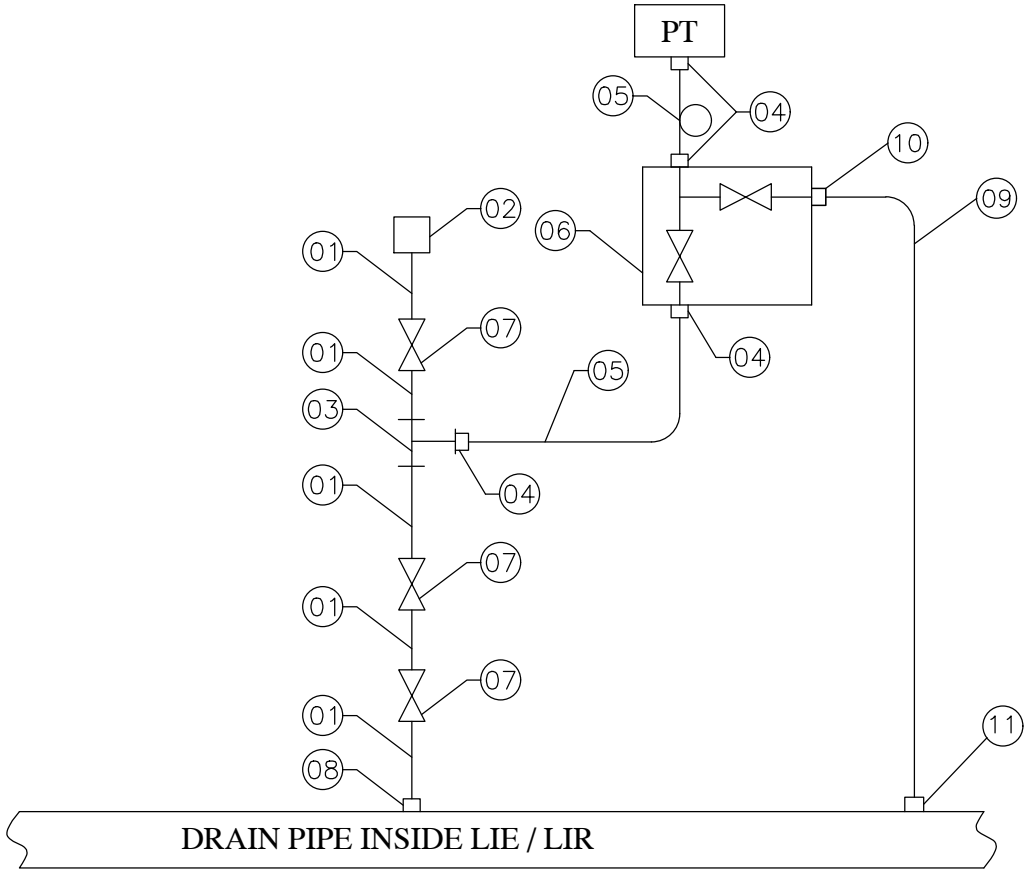

NOTES:

01. "TRANSMITTER BELOW SOURCE"
02. FOR BILL OF MATERIAL REFER PAGE 07 OF 33
03. DRAIN PIPE / 2" NB SCH 80 - A106 Gr. C
04. ITEM NO. 05 SHALL BE FORMED AS A SYPHON FOR SERVICES WITH MEDIUM AS STEAM.

CE/416/NON-NTPC/RC/HUP

REV. NO. 00

ITEM NO.	ITEM DESCRIPTION	QTY / INST. (Nos.)
01	SEAMLESS PIPE MATL.: ASTM A335 P22 SIZE: 1/2" NB-SCH 160	A/R
02	BULKHEAD COUPLING / AS PER ANSI B16.11 MATL.: ASTM A182 F22 SIZE: 1/2" NB-SW / CL : 6000 LBS	01
03	FORGED UNEQUAL TEE/AS PER ANSI B16.11 MATL.: ASTM A182 F22 SIZE: 2 x 1/2" NB -SW X 1/2" NPTF / CL 6000LBS	01
04	MALE DFDC CONNECTOR MATL.: SS316 SIZE: 1/2" NPTM x TO SUIT 1/2" OD SS TUBE	04
05	SEAMLESS TUBE MATL.: A213 TP 316L SIZE: 1/2" OD x 2.1mm THK.	A/R
06	TWO VALVE MANIFOLD WITH DRAIN PLUG BODY: SS316, BAR STOCK PORT SIZE: 1/2" NPTF / PR. TESTING : 6000PSI	01
07	FORGED GLOBE VALVE BODY: ASTM A182 F22 / STEM: ASTM A182 Gr. F6a SIZE: 1/2" NB-SW / CL 3000 SPL	03
08	HALF COUPLING / AS PER ANSI B 16.11 MATL.: ASTM A182 F22 SIZE: 1/2" NB-SW / CL 6000 LBS	01
09	TUBE MATL: SS 316 SIZE: 8mm OD x 1.0mm THICK	0.15MTR
10	MALE CONNECTOR MATL: SS316 SIZE: 1/4" NPT(M) x TO SUIT 8mm OD SS TUBE / CL: 6000 LBS	01
11	ADAPTER MATL: SS316 SIZE: 1/4" OD NB X TO SUIT 8mm OD SS TUBE / CL: 6000 LBS	01

COPY RIGHT AND CONFIDENTIAL
The information on this document is the property of Bharat Heavy Electricals Limited.
It must not be used directly or indirectly in anyway detrimental to the interest to the Company.

DATE

REVISION NO

REVISION NO	DATE

COPY RIGHT AND CONFIDENTIAL
The information on this document is the property of Bharat Heavy Electricals Limited.
It must not be used directly or indirectly in anyway detrimental to the interest to the Company.

A4 - 10

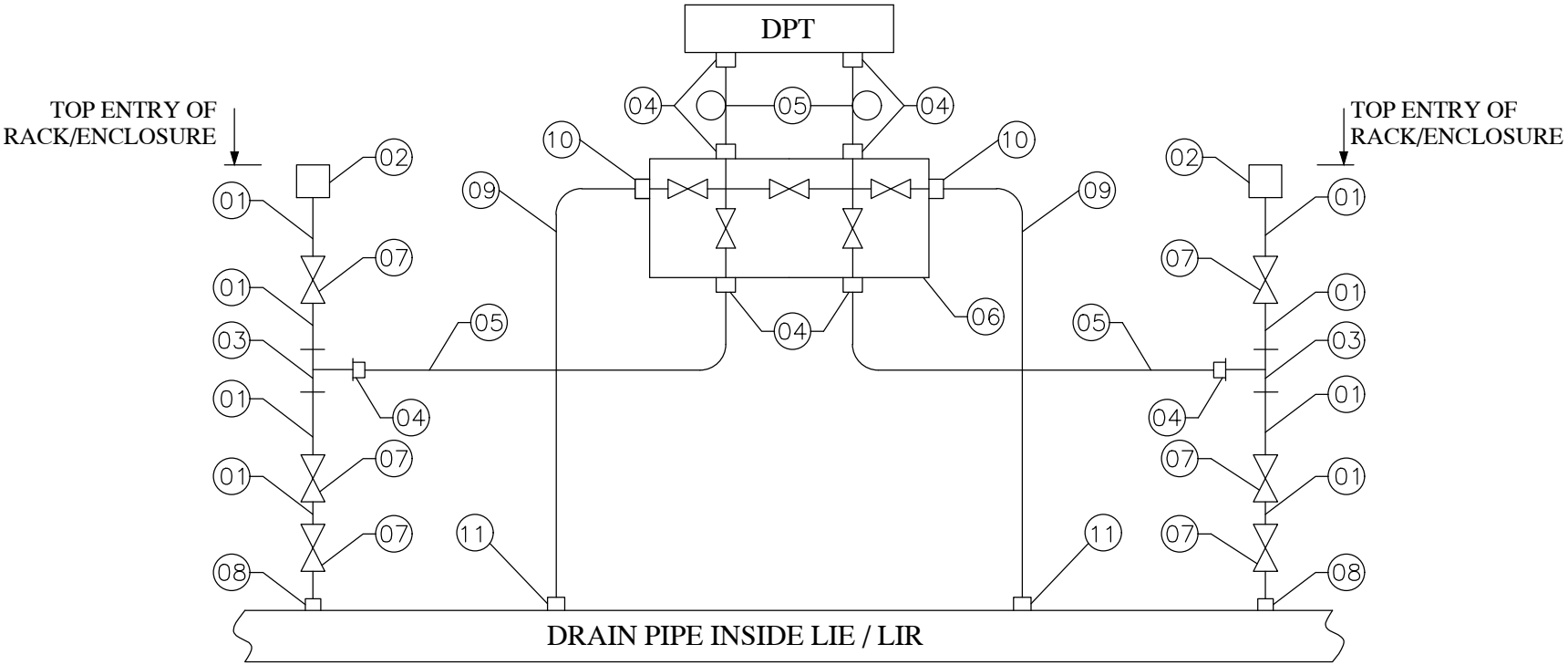

NOTES:

01. "TRANSMITTER BELOW SOURCE"
02. FOR BILL OF MATERIAL REFER PAGE 09 OF 33
03. DRAIN PIPE / 2" NB SCH 80 - A106 Gr. C
04. ITEM NO. 05 SHALL BE FORMED AS A SYPHON FOR SERVICES WITH MEDIUM AS STEAM.

ITEM NO.	ITEM DESCRIPTION	QTY / INST. (Nos.)
01	SEAMLESS PIPE MATL.: ASTM A335 P22 SIZE: 1/2" NB-SCH 160	A/R
02	BULKHEAD COUPLING / AS PER ANSI B16.11 MATL.: ASTM A182 F22 SIZE: 1/2" NB-SW / CL : 6000 LBS	02
03	FORGED UNEQUAL TEE/AS PER ANSI B16.11 MATL.: ASTM A182 F22 SIZE: 2 x 1/2" NB -SW X 1/2" NPTF / CL 6000LBS	02
04	MALE DFDC CONNECTOR MATL.: SS316 SIZE: 1/2" NPTM x TO SUIT 1/2" OD SS TUBE	08
05	SEAMLESS TUBE MATL.: A213 TP 316L SIZE: 1/2" OD x 2.1mm THK.	A/R
06	FIVE VALVE MANIFOLD WITH DRAIN PLUG BODY: SS316, BAR STOCK. PORT SIZE: 1/2" NPTF / PR. TESTING : 6000PSI	01
07	FORGED GLOBE VALVE BODY: ASTM A182 F22 / STEM: ASTM A182 Gr. F6a SIZE: 1/2" NB-SW / CL 3000SPL	06
08	HALF COUPLING / AS PER ANSI B16.11 MATL.: ASTM A182 F22 SIZE: 1/2" NB-SW / CL 6000 LBS	02
09	TUBE MATL: SS 316 SIZE: 8mm OD x 1.0mm THICK	0.3 MTR
10	MALE CONNECTOR MATL: SS316 SIZE: 1/4" NPT(M) x TO SUIT 8mm OD SS TUBE / CL: 6000 LBS	02
11	ADAPTER MATL: SS316 SIZE: 1/4" OD NB X TO SUIT 8mm OD SS TUBE / CL: 6000 LBS	02

COPY RIGHT AND CONFIDENTIAL
The information on this document is the property of Bharat Heavy Electricals Limited.
It must not be used directly or indirectly in anyway detrimental to the interest to the Company.

DATE

REVISION NO

REVISION NO	DATE

COPY RIGHT AND CONFIDENTIAL
The information on this document is the property of Bharat Heavy Electricals Limited.
It must not be used directly or indirectly in anyway detrimental to the interest to the Company.

A4 - 10

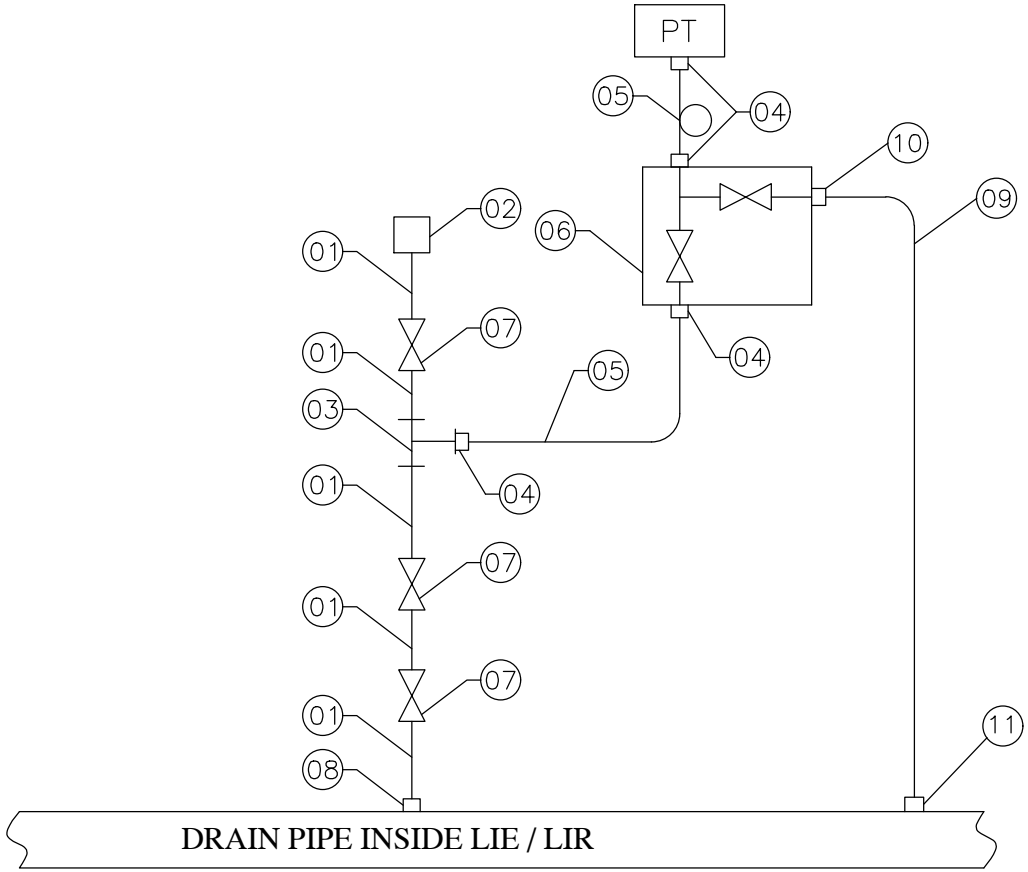

NOTES:

01. "TRANSMITTER BELOW SOURCE"
02. FOR BILL OF MATERIAL REFER PAGE 11 OF 33
03. DRAIN PIPE / 2" NB SCH 80 - A106 Gr. C
04. ITEM NO. 05 SHALL BE FORMED AS A SYPHON FOR SERVICES WITH MEDIUM AS STEAM.

CE/416/NON-NTPC/RC/HUP

REV. NO. 00

ITEM NO.	ITEM DESCRIPTION	QTY / INST. (Nos.)
01	SEAMLESS PIPE MATL.: ASTM A106 Gr.C SIZE: 1/2" NB-SCH 160	A/R
02	BULKHEAD COUPLING / AS PER ANSI B16.11 MATL.: ASTM A105 SIZE: 1/2" NB-SW / CL : 6000 LBS	01
03	FORGED UNEQUAL TEE/AS PER ANSI B16.11 MATL.: ASTM A105 SIZE: 2 x 1/2" NB -SW X 1/2" NPTF / CL 6000LBS	01
04	MALE DFDC CONNECTOR MATL.: SS316 SIZE: 1/2" NPTM x TO SUIT 1/2" OD SS TUBE	04
05	SEAMLESS TUBE MATL.: A213 TP 316L SIZE: 1/2" OD x 2.1mm THK.	A/R
06	TWO VALVE MANIFOLD WITH DRAIN PLUG BODY: SS316, BAR STOCK PORT SIZE: 1/2" NPTF / PR. TESTING : 6000PSI	01
07	FORGED GLOBE VALVE BODY: MATL.: ASTM A105 / STEM: ASTM A182 Gr. F6a SIZE: 1/2" NB-SW / CL 2500 SPL	03
08	HALF COUPLING / AS PER ANSI B 16.11 MATL.: ASTM A105 SIZE: 1/2" NB-SW / CL 6000 LBS	01
09	TUBE MATL: SS 316 SIZE: 8mm OD x 1.0mm THICK	0.15MTR
10	MALE CONNECTOR MATL: SS316 SIZE: 1/4" NPT(M) x TO SUIT 8mm OD SS TUBE / CL: 6000 LBS	01
11	ADAPTER MATL: SS316 SIZE: 1/4" OD NB X TO SUIT 8mm OD SS TUBE / CL: 6000 LBS	01

COPY RIGHT AND CONFIDENTIAL
The information on this document is the property of Bharat Heavy Electricals Limited.
It must not be used directly or indirectly in anyway detrimental to the interest to the Company.

DATE

REVISION NO

REVISION NO	DATE	COPY RIGHT AND CONFIDENTIAL The information on this document is the property of Bharat Heavy Electricals Limited. It must not be used directly or indirectly in anyway detrimental to the interest to the Company.

A4 - 10

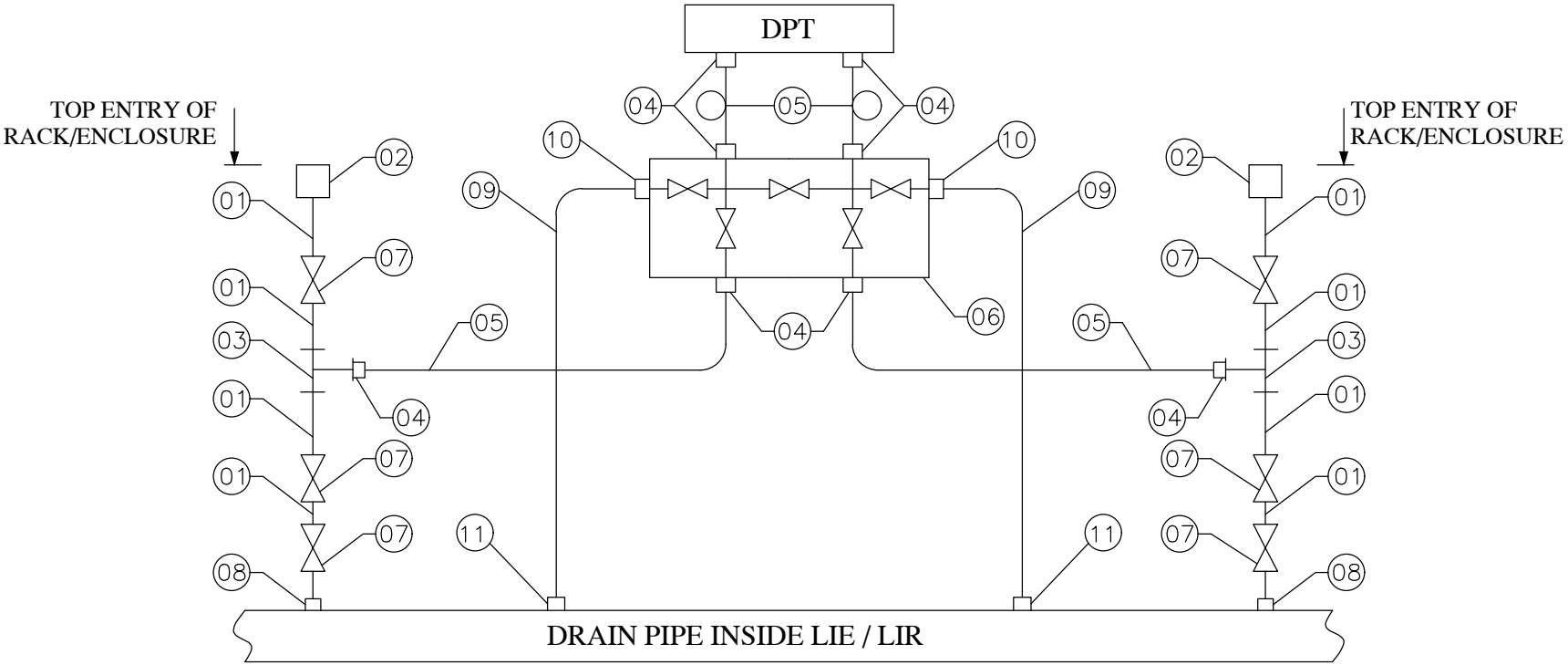

NOTES:

01. "TRANSMITTER BELOW SOURCE"
02. FOR BILL OF MATERIAL REFER PAGE 13 OF 33
03. DRAIN PIPE / 2" NB SCH 80 - A106 Gr. C
04. ITEM NO. 05 SHALL BE FORMED AS A SYPHON FOR SERVICES WITH MEDIUM AS STEAM.

CE/416/NON-NTPC/RC/HUP

REV. NO. 00

PAGE NO.: 12 OF 33

ITEM NO.	ITEM DESCRIPTION	QTY / INST. (Nos.)
01	SEAMLESS PIPE MATL.: ASTM A106 Gr.C SIZE: 1/2" NB-SCH 160	A/R
02	BULKHEAD COUPLING / AS PER ANSI B16.11 MATL.: ASTM A105 SIZE: 1/2" NB-SW / CL : 6000 LBS	02
03	FORGED UNEQUAL TEE/AS PER ANSI B16.11 MATL.: ASTM A105 SIZE: 2 x 1/2" NB -SW X 1/2" NPTF / CL 6000LBS	02
04	MALE DFDC CONNECTOR MATL.: SS316 SIZE: 1/2" NPTM x TO SUIT 1/2" OD SS TUBE	08
05	SEAMLESS TUBE MATL.: A213 TP 316L SIZE: 1/2" OD x 2.1mm THK.	A/R
06	FIVE VALVE MANIFOLD WITH DRAIN PLUG BODY: SS316, BAR STOCK PORT SIZE: 1/2" NPTF / PR. TESTING : 6000PSI	01
07	FORGED GLOBE VALVE BODY: MATL.: ASTM A105 / STEM: ASTM A182 Gr. F6a SIZE: 1/2" NB-SW / CL 2500 SPL	06
08	HALF COUPLING / AS PER ANSI B 16.11 MATL.: ASTM A105 SIZE: 1/2" NB-SW / CL 6000 LBS	02
09	TUBE MATL: SS 316 SIZE: 8mm OD x 1.0mm THICK	0.3 MTR
10	MALE CONNECTOR MATL: SS316 SIZE: 1/4" NPT(M) x TO SUIT 8mm OD SS TUBE / CL: 6000 LBS	02
11	ADAPTER MATL: SS316 SIZE: 1/4" OD NB X TO SUIT 8mm OD SS TUBE / CL: 6000 LBS	02

COPY RIGHT AND CONFIDENTIAL
The information on this document is the property of Bharat Heavy Electricals Limited.
It must not be used directly or indirectly in anyway detrimental to the interest to the Company.

DATE

REVISION NO

REVISION NO	DATE

COPY RIGHT AND CONFIDENTIAL
The information on this document is the property of Bharat Heavy Electricals Limited.
It must not be used directly or indirectly in anyway detrimental to the interest to the Company.

A4 - 10

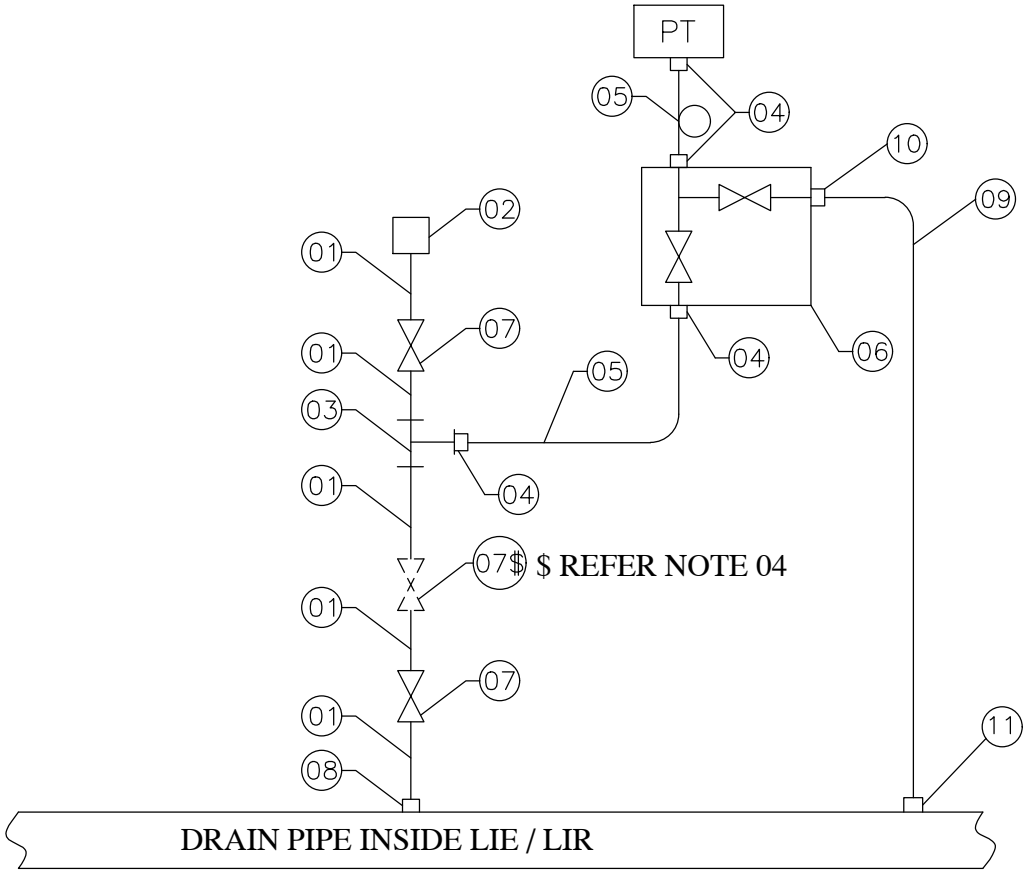

NOTES:

01. "TRANSMITTER BELOW SOURCE"
02. FOR BILL OF MATERIAL REFER PAGE 15 OF 33
03. DRAIN PIPE / 2" NB SCH 80 - A106 Gr. C
04. ITEM 07$ QUANTITY SHALL BE 3 Nos. FOR TAGS. WITH DESIGN PRESSURE >=40kg/Cm2
05. ITEM NO. 05 SHALL BE FORMED AS A SYPHON FOR SERVICES WITH MEDIUM AS STEAM.

CE/416/NON-NTPC/RC/HUP

REV. NO. 00

ITEM NO.	ITEM DESCRIPTION	QTY / INST. (Nos.)
01	SEAMLESS PIPE MATL.: ASTM A106 Gr.C SIZE: 1/2" NB-SCH 80	A/R
02	BULKHEAD COUPLING / AS PER ANSI B16.11 MATL.: ASTM A105 SIZE: 1/2" NB-SW / CL : 3000 LBS	01
03	FORGED UNEQUAL TEE/AS PER ANSI B16.11 MATL.: ASTM A105 SIZE: 2 x 1/2" NB -SW X 1/2" NPTF / CL 3000LBS	01
04	MALE DFDC CONNECTOR MATL.: SS316 SIZE: 1/2" NPTM x TO SUIT 1/2" OD SS TUBE	04
05	SEAMLESS TUBE MATL.: A213 TP 316 SIZE: 1/2" OD x 2.1mm THK.	A/R
06	TWO VALVE MANIFOLD WITH DRAIN PLUG BODY: SS316, BAR STOCK PORT SIZE: 1/2" NPTF / PR. TESTING : 3000PSI	01
07$	FORGED GLOBE VALVE BODY: MATL.: ASTM A105 / STEM: ASTM A182 Gr. F6a SIZE: 1/2" NB-SW / CL 800	A/R
08	HALF COUPLING / AS PER ANSI B 16.11 MATL.: ASTM A105 SIZE: 1/2" NB-SW / CL 800 LBS	01
09	TUBE MATL: SS 316 SIZE: 8mm OD x 1.0mm THICK	0.15MTR
10	MALE CONNECTOR MATL: SS316 SIZE: 1/4" NPT(M) x TO SUIT 8mm OD SS TUBE / CL: 3000 LBS	01
11	ADAPTER MATL: SS316 SIZE: 1/4" OD NB X TO SUIT 8mm OD SS TUBE / CL: 6000 LBS	01

COPY RIGHT AND CONFIDENTIAL
The information on this document is the property of Bharat Heavy Electricals Limited.
It must not be used directly or indirectly in anyway detrimental to the interest to the Company.

DATE

REVISION NO

REVISION NO	DATE

COPY RIGHT AND CONFIDENTIAL
The information on this document is the property of Bharat Heavy Electricals Limited.
It must not be used directly or indirectly in anyway detrimental to the interest to the Company.

A4 - 10

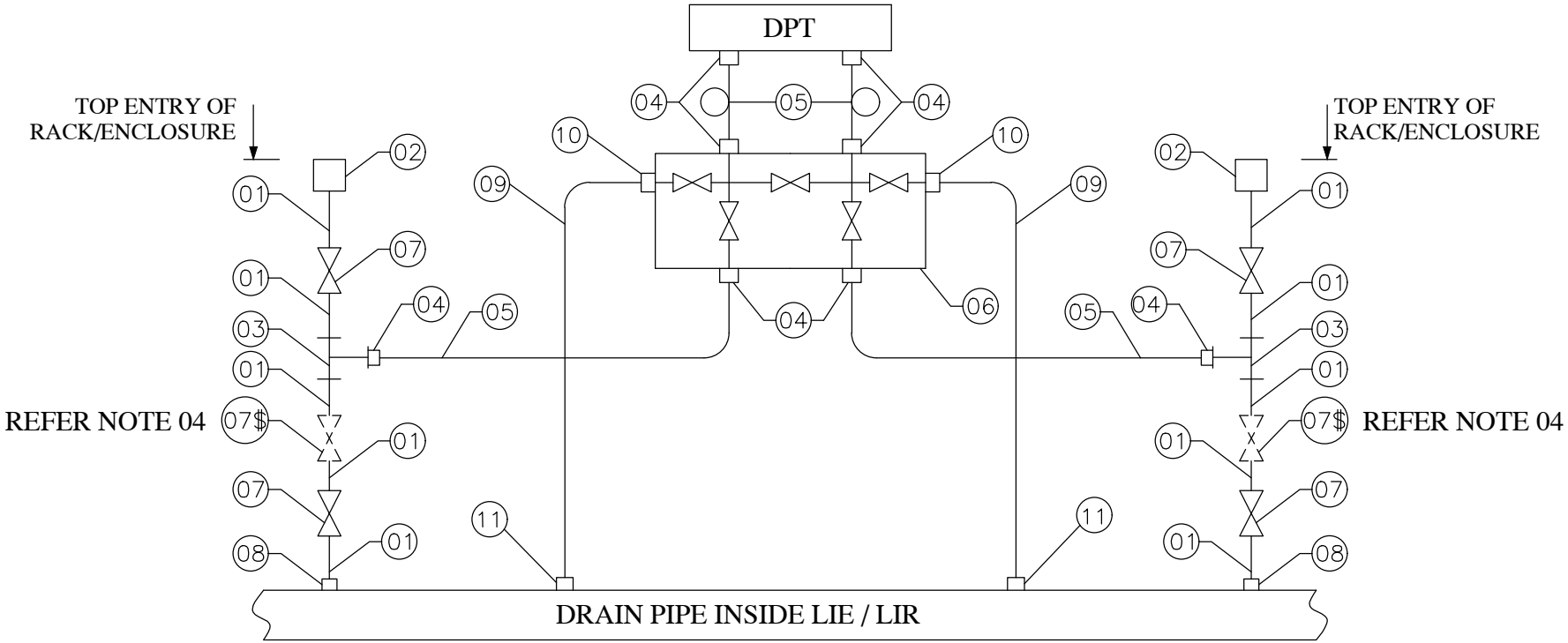

NOTES:

01. "TRANSMITTER BELOW SOURCE"
02. FOR BILL OF MATERIAL REFER PAGE 17 OF 33
03. DRAIN PIPE / 2" NB SCH 80 - A106 Gr. C
04. ITEM 07$ QUANTITY SHALL BE 6 Nos. FOR TAGS. WITH DESIGN PRESSURE >=40kg/Cm2
05. ITEM NO. 05 SHALL BE FORMED AS A SYPHON FOR SERVICES WITH MEDIUM AS STEAM.

CE/416/NON-NTPC/RC/HUP

REV. NO. 00

ITEM NO.	ITEM DESCRIPTION	QTY / INST. (Nos.)
01	SEAMLESS PIPE MATL.: ASTM A106 Gr.C SIZE: 1/2" NB-SCH 80	A/R
02	BULKHEAD COUPLING / AS PER ANSI B16.11 MATL.: ASTM A105 SIZE: 1/2" NB-SW / CL : 3000 LBS	02
03	FORGED UNEQUAL TEE/AS PER ANSI B16.11 MATL.: ASTM A105 SIZE: 2 x 1/2" NB -SW X 1/2" NPTF / CL 3000LBS	02
04	MALE DFDC CONNECTOR MATL.: SS316 SIZE: 1/2" NPTM x TO SUIT 1/2" OD SS TUBE	08
05	SEAMLESS TUBE MATL.: A213 TP 316L SIZE: 1/2" OD x 2.1mm THK.	A/R
06	FIVE VALVE MANIFOLD WITH DRAIN PLUG BODY: SS316, BAR STOCK PORT SIZE: 1/2" NPTF / PR. TESTING : 3000PSI	01
07$	FORGED GLOBE VALVE BODY: MATL.: ASTM A105 / STEM: ASTM A182 Gr. F6a SIZE: 1/2" NB-SW / CL 800	A/R
08	HALF COUPLING / AS PER ANSI B 16.11 MATL.: ASTM A105 SIZE: 1/2" NB-SW / CL 3000 LBS	02
09	TUBE MATL: SS 316 SIZE: 8mm OD x 1.0mm THICK	0.3MTR
10	MALE CONNECTOR MATL: SS316 SIZE: 1/4" NPT(M) x TO SUIT 8mm OD SS TUBE / CL: 3000 LBS	02
11	ADAPTER MATL: SS316 SIZE: 1/4" OD NB X TO SUIT 8mm OD SS TUBE / CL: 6000 LBS	02

COPY RIGHT AND CONFIDENTIAL
The information on this document is the property of Bharat Heavy Electricals Limited.
It must not be used directly or indirectly in anyway detrimental to the interest to the Company.

DATE

REVISION NO

REVISION NO	DATE

COPY RIGHT AND CONFIDENTIAL
The information on this document is the property of Bharat Heavy Electricals Limited.
It must not be used directly or indirectly in anyway detrimental to the interest to the Company.

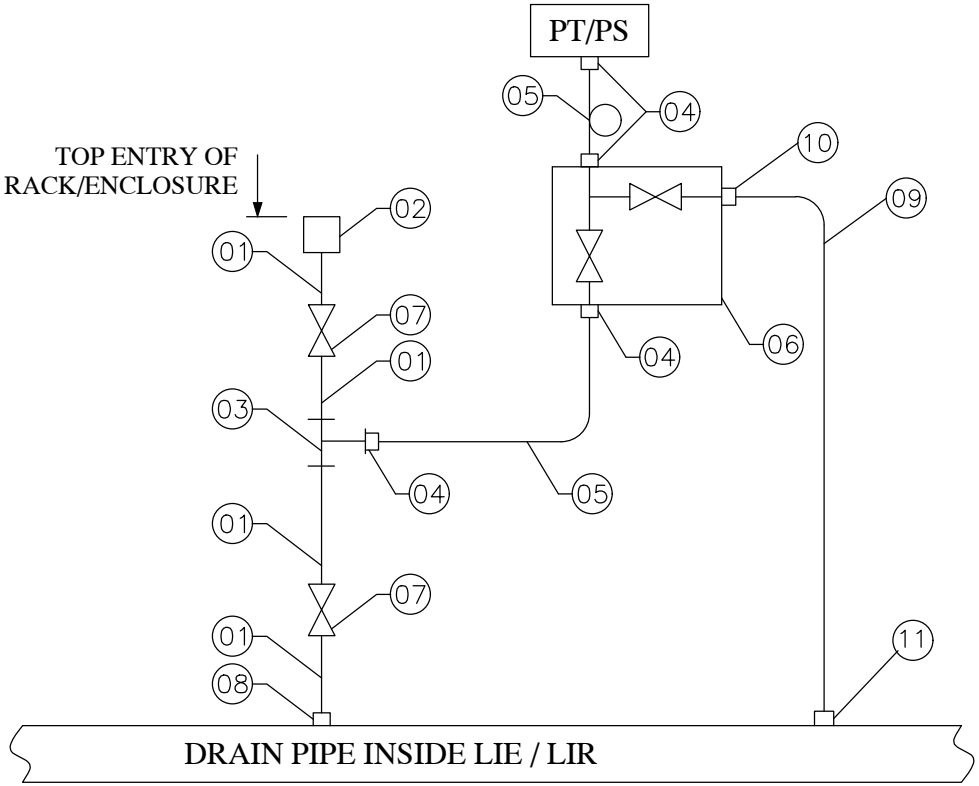

NOTES:

01. "TRANSMITTER BELOW SOURCE"
02. FOR BILL OF MATERIAL REFER PAGE 19 OF 33
03. DRAIN PIPE / 2" NB SCH 80 - A106 Gr. C
04. ITEM NO. 05 SHALL BE FORMED AS A SYPHON FOR SERVICES WITH MEDIUM AS STEAM.

A4 - 10

CE/416/NON-NTPC/RC/HUP

REV. NO. 00

ITEM NO.	ITEM DESCRIPTION	QTY / INST. (Nos.)
01	SEAMLESS PIPE MATL.: ASTM 312 TP316 SIZE: 1/2" NB-SCH 40	A/R
02	BULK HEAD UNION / COUPLING /AS PER ANSI B16.11 MATL.: ASTM A182 F316 SIZE: 1/2" NB-SW / CL : 3000 LBS	01
03	FORGED UNEQUAL TEE / AS PER ANSI B16.11 MATL.: ASTM A182 F316 SIZE: 2 x 1/2" NB - SW X 1/2" NPTF / CL : 3000 LBS	01
04	MALE DFDC CONNECTOR MATL.: SS316 SIZE: 1/2" NPTM x TO SUIT 1/2" OD SS TUBE	04
05	SEAMLESS TUBE MATL.: A213 TP 316L SIZE: 1/2" OD x 2.1mm THK.	A/R
06	TWO VALVE MANIFOLD WITH DRAIN PLUG MATL.: SS316, BAR STOCK. PORT SIZE: 1/2" NPTF / PR. TESTING : 3000PSI	01
07	FORGED GLOBE VALVE BODY: ASTM A182 F316 / STEM :ASTM A182 Gr F6A SIZE: 1/2" NB-SW / CL : 800	02
08	HALF COUPLING / AS PER ANSI B 16.11 MATL.: ASTM A 182 F316 SIZE: 1/2" NB SW / CL 3000 LBS	01
09	TUBE MATL: SS 316 SIZE: 8mm OD x 1.0mm THICK	0.15MTR
10	MALE CONNECTOR MATL: SS316 SIZE: 1/4" NPT(M) x TO SUIT 8mm OD SS TUBE / CL: 3000 LBS	01
11	ADAPTER MATL: SS316 SIZE: 1/4" OD NB X TO SUIT 8mm OD SS TUBE / CL: 6000 LBS	01

COPY RIGHT AND CONFIDENTIAL
The information on this document is the property of Bharat Heavy Electricals Limited.
It must not be used directly or indirectly in anyway detrimental to the interest to the Company.

DATE

REVISION NO

REVISION NO	DATE

COPY RIGHT AND CONFIDENTIAL
The information on this document is the property of Bharat Heavy Electricals Limited.
It must not be used directly or indirectly in anyway detrimental to the interest to the Company.

A4 - 10

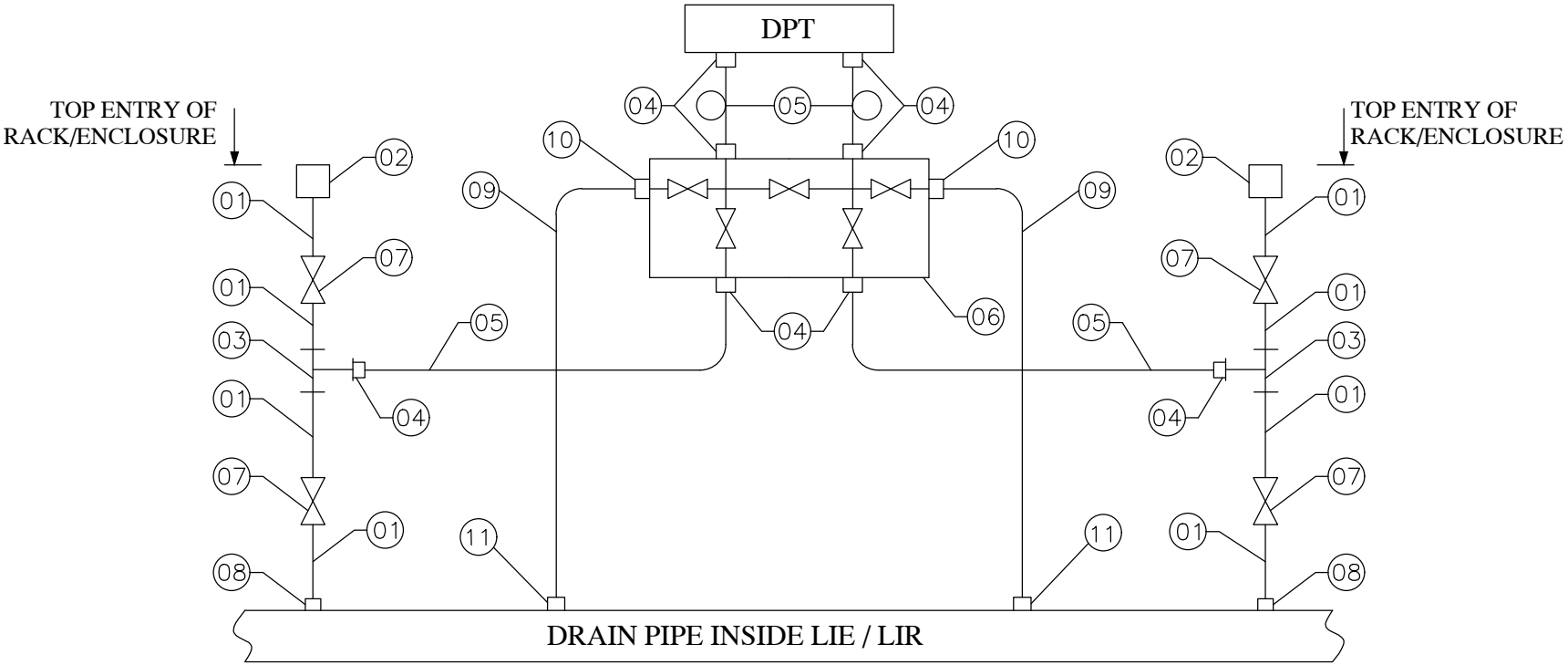

NOTES:

01. "TRANSMITTER BELOW SOURCE"
02. FOR BILL OF MATERIAL REFER PAGE 21 OF 33
03. DRAIN PIPE / 2" NB SCH 80 - A106 Gr. C
04. ITEM NO. 05 SHALL BE FORMED AS A SYPHON FOR SERVICES WITH MEDIUM AS STEAM.

ITEM NO.	ITEM DESCRIPTION	QTY / INST. (Nos.)
01	SEAMLESS PIPE MATL.: ASTM 312 TP316 SIZE: 1/2" NB-SCH 40	A/R
02	BULK HEAD UNION / COUPLING /AS PER ANSI B16.11 MATL.: ASTM A182 F316 SIZE: 1/2" NB-SW / CL : 3000 LBS	02
03	FORGED UNEQUAL TEE/AS PER ANSI B16.11 MATL.: ASTM A182 F316 SIZE: 2 x 1/2" NB - SW X 1/2" NPTF / CL : 3000 LBS	02
04	MALE DFDC CONNECTOR MATL.: SS316 SIZE: 1/2" NPTM x TO SUIT 1/2" OD SS TUBE	08
05	SEAMLESS TUBE MATL.: A213 TP 316L SIZE: 1/2" OD x 2.1mm THK.	A/R
06	FIVE VALVE MANIFOLD WITH DRAIN PLUG MATL.: SS316, BAR STOCK. PORT SIZE: 1/2" NPTF / PR. TESTING : 3000PSI	01
07	FORGED GLOBE VALVE BODY: ASTM A182 F316 / STEM :ASTM A182 Gr F6A SIZE: 1/2" NB-SW / CL : 800	04
08	HALF COUPLING / AS PER ANSI B 16.11 MATL.: ASTM A 182 F316 SIZE: 1/2" NB SW / CL 3000 LBS	02
09	TUBE MATL: SS 316 SIZE: 8mm OD x 1.0mm THICK	0.3MTR
10	MALE CONNECTOR MATL: SS316 SIZE: 1/4" NPT(M) x TO SUIT 8mm OD SS TUBE / CL: 3000 LBS	02
11	ADAPTER MATL: SS316 SIZE: 1/4" OD NB X TO SUIT 8mm OD SS TUBE / CL: 6000 LBS	02

COPY RIGHT AND CONFIDENTIAL
The information on this document is the property of Bharat Heavy Electricals Limited.
It must not be used directly or indirectly in anyway detrimental to the interest to the Company.

DATE

REVISION NO

REVISION NO	DATE	COPY RIGHT AND CONFIDENTIAL The information on this document is the property of Bharat Heavy Electricals Limited. It must not be used directly or indirectly in anyway detrimental to the interest to the Company.		

A4 – 10

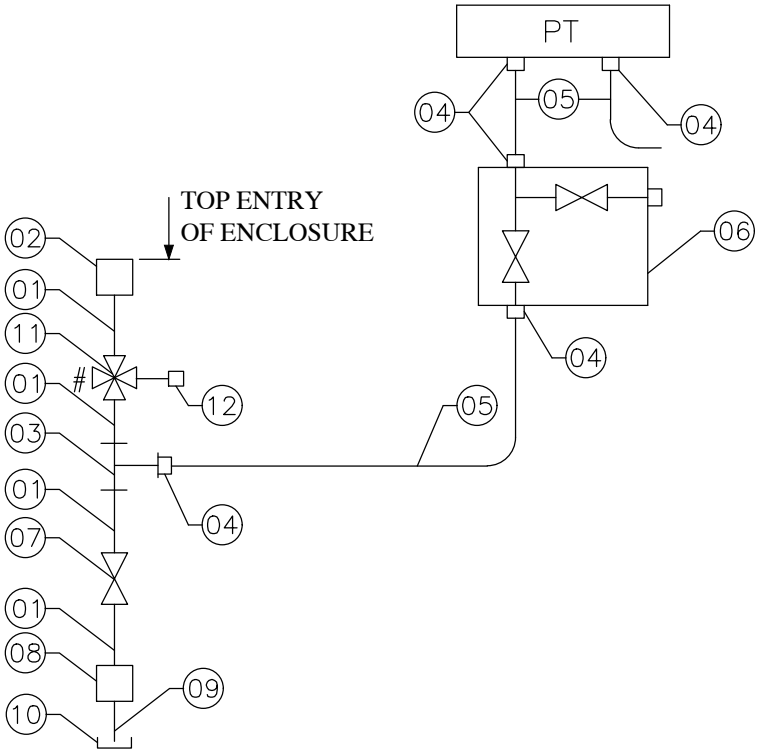

NOTES:

01. "TRANSMITTER ABOVE SOURCE"
02. FOR BILL OF MATERIAL REFER PAGE 23 OF 33
03. FOR INTERMITTANT PURGING REFER PAGE 32 & 33 OF 33

CE/416/NON-NTPC/RC/HUP

REV. NO. 00

PAGE NO.: 22 OF 33

ITEM NO.	ITEM DESCRIPTION	QTY / INST. (Nos.)
01	SEAMLESS PIPE MATL.: ASTM A106 Gr.C SIZE: 3/4" NB-SCH 80	A/R
02	BULK HEAD UNION/COUPLING/AS PER ANSI B16.11 MATL.: ASTM A105 SIZE: 3/4" NB SW / CL 3000LBS	01
03	FORGED UNEQUAL TEE/AS PER ANSI B16.11 MATL.: ASTM A105 SIZE: 2 x 3/4" NB -SW X 1/2" NPTF / CL 3000LBS	01
04	MALE CONNECTOR / TUBE FITTING/DFDC MATL.: SS316 SIZE: 1/2" NPTM x TO SUIT 1/2" OD SS TUBE	05
05	SEAMLESS TUBE MATL.: A213 TP 316L SIZE: 1/2" OD x 1.13mm THK.	A/R
06	TWO VALVE MANIFOLD WITH DRAIN PLUG BODY: SS316 PORT SIZE: 1/2" NPTF / PR. TESTING : 3000PSI	01
07	FORGED GLOBE VALVE BODY: ASTM A105 / STEM: ASTM A182 Gr. F6a SIZE: 3/4" NB-SW / CL 800	01
08	DRAIN POT: 2" NB -SCH 80 BODY: A106 Gr. C SIZE: CONN. 3/4" NB - SW	01
09	NIPPLE MATL.: ASTM A106 Gr.C SIZE: 3/4" NB-SCH 80	01
10	CAP MATL.: ASTM A105 SIZE: 3/4" NPTF	01
11	FOUR WAY VALVE MATL.: ASTM A105 / RATING CLASS 800 SIZE: (2 x 3/4" NB-SW) x (2 x 1/2" NPTF)	01
12	QUICK DISCONNECTING FITTING MATL.: SS 304 SIZE.:1/2" NPTM	01

COPY RIGHT AND CONFIDENTIAL
The information on this document is the property of Bharat Heavy Electricals Limited.
It must not be used directly or indirectly in anyway detrimental to the interest to the Company.

DATE

REVISION NO

REVISION NO	DATE	COPY RIGHT AND CONFIDENTIAL The information on this document is the property of Bharat Heavy Electricals Limited. It must not be used directly or indirectly in anyway detrimental to the interest to the Company.		

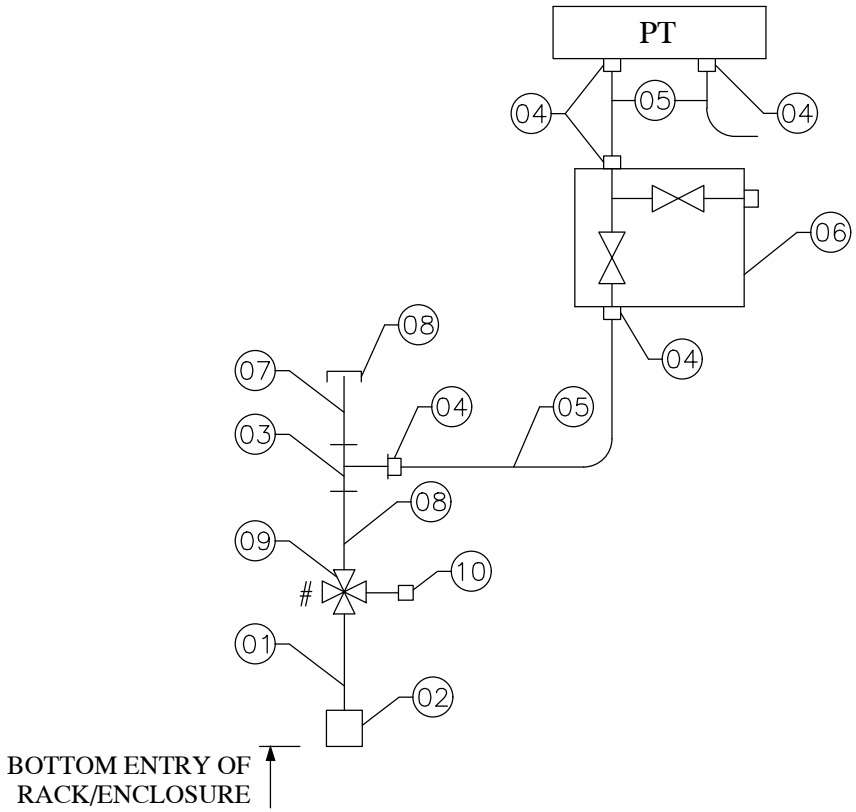

NOTES:

01. "TRANSMITTER ABOVE SOURCE"
02. FOR BILL OF MATERIAL REFER PAGE 25 OF 33
03. FOR INTERMITTANT PURGING REFER PAGE 32 & 33 OF 33

A4 – 10

CE/416/NON-NTPC/RC/HUP

REV. NO. 00

ITEM NO.	ITEM DESCRIPTION	QTY / INST. (Nos.)
01	SEAMLESS PIPE MATL.: ASTM A106 Gr.C SIZE: 3/4" NB-SCH 80	A/R
02	BULKHEAD COUPLING / AS PER ANSI B16.11 MATL.: ASTM A105 SIZE: 3/4" NB-SW / CL : 3000 LBS	01
03	FORGED UNEQUAL TEE/AS PER ANSI B16.11 MATL.: ASTM A105 SIZE: 2 x 3/4" NB -SW X 1/2" NPTF / CL 3000LBS	01
04	MALE DFDC CONNECTOR MATL.: SS316 SIZE: 1/2" NPTM x TO SUIT 1/2" OD SS TUBE	05
05	SEAMLESS TUBE MATL.: A213 TP 316L SIZE: 1/2" OD x 1.13mm THK.	A/R
06	TWO VALVE MANIFOLD WITH DRAIN PLUG BODY: SS316 PORT SIZE: 1/2" NPTF / PR. TESTING : 3000PSI	01
07	NIPPLE MATL.: ASTM A106 Gr.C SIZE: 3/4" NB-SCH 80	01
08	CAP MATL.: ASTM A105 SIZE: 3/4" NPTF	01
09	FOUR WAY VALVE MATL.: ASTM A105 / RATING CLASS 800 SIZE: (2 x 3/4" NB-SW) x (2 x 1/2" NPTF)	01
10	QUICK DISCONNECTING FITTING MATL.: SS 304 SIZE.:1/2" NPTM	01

COPY RIGHT AND CONFIDENTIAL
The information on this document is the property of Bharat Heavy Electricals Limited.
It must not be used directly or indirectly in anyway detrimental to the interest to the Company.

DATE

REVISION NO

REVISION NO	DATE

COPY RIGHT AND CONFIDENTIAL
The information on this document is the property of Bharat Heavy Electricals Limited.
It must not be used directly or indirectly in anyway detrimental to the interest to the Company.

A4 - 10

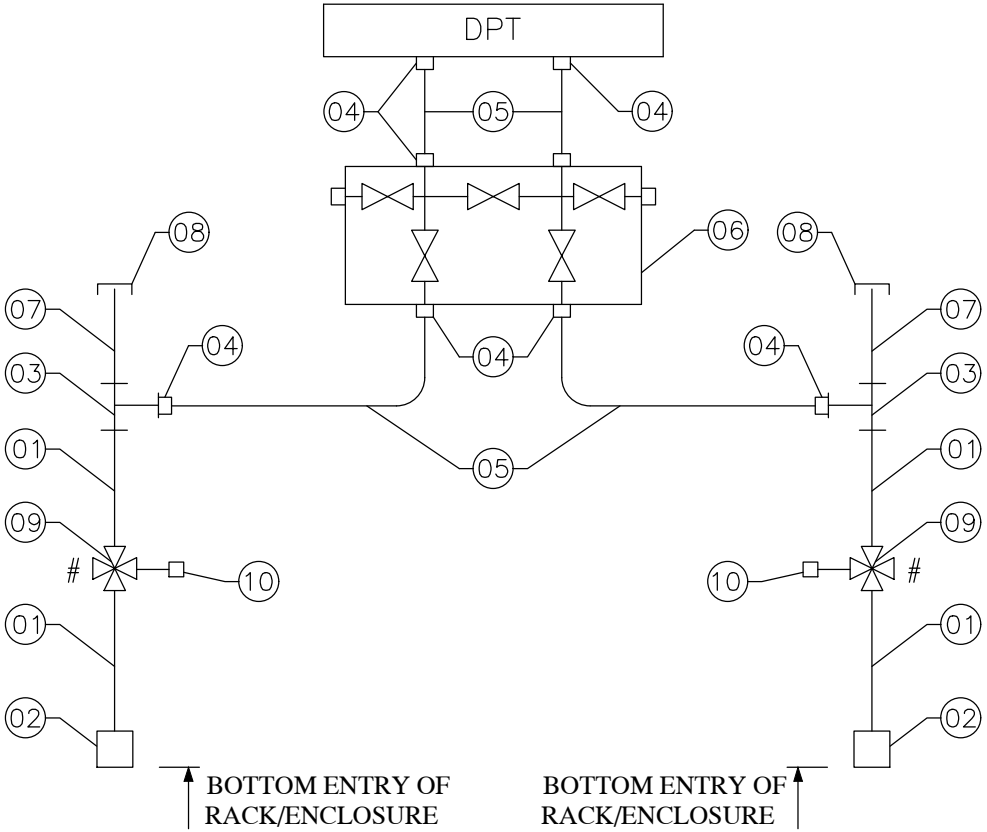

NOTES:

01. "TRANSMITTER ABOVE SOURCE"
02. FOR BILL OF MATERIAL REFER PAGE 27 OF 33
03. FOR INTERMITTANT PURGING REFER PAGE 32 & 33 OF 33

CE/416/NON-NTPC/RC/HUP

REV. NO. 00

ITEM NO.	ITEM DESCRIPTION	QTY / INST. (Nos.)
01	SEAMLESS PIPE MATL.: ASTM A106 Gr.C SIZE: 3/4" NB-SCH 80	A/R
02	BULKHEAD COUPLING / AS PER ANSI B16.11 MATL.: ASTM A105 SIZE: 3/4" NB-SW / CL : 3000 LBS	02
03	FORGED UNEQUAL TEE/AS PER ANSI B16.11 MATL.: ASTM A105 SIZE: 2 x 3/4" NB -SW X 1/2" NPTF / CL 3000LBS	02
04	MALE DFDC CONNECTOR MATL.: SS316 SIZE: 1/2" NPTM x TO SUIT 1/2" OD SS TUBE	08
05	SEAMLESS TUBE MATL.: A213 TP 316L SIZE: 1/2" OD x 1.13mm THK.	A/R
06	FIVE VALVE MANIFOLD WITH DRAIN PLUG BODY: SS316 PORT SIZE: 1/2" NPTF / PR. TESTING : 3000PSI	01
07	NIPPLE MATL.: ASTM A106 Gr.C SIZE: 3/4" NB-SCH 80	02
08	CAP MATL.: ASTM A105 SIZE: 3/4" NPTF	02
09	FOUR WAY VALVE MATL.: ASTM A105 / RATING CLASS 800 SIZE: (2 x 3/4" NB-SW) x (2 x 1/2" NPTF)	02
10	QUICK DISCONNECTING FITTING MATL.: SS 304 SIZE.:1/2" NPTM	02

COPY RIGHT AND CONFIDENTIAL
The information on this document is the property of Bharat Heavy Electricals Limited.
It must not be used directly or indirectly in anyway detrimental to the interest to the Company.

DATE

REVISION NO

REVISION NO	DATE	COPY RIGHT AND CONFIDENTIAL The information on this document is the property of Bharat Heavy Electricals Limited. It must not be used directly or indirectly in anyway detrimental to the interest to the Company.		

A4 – 10

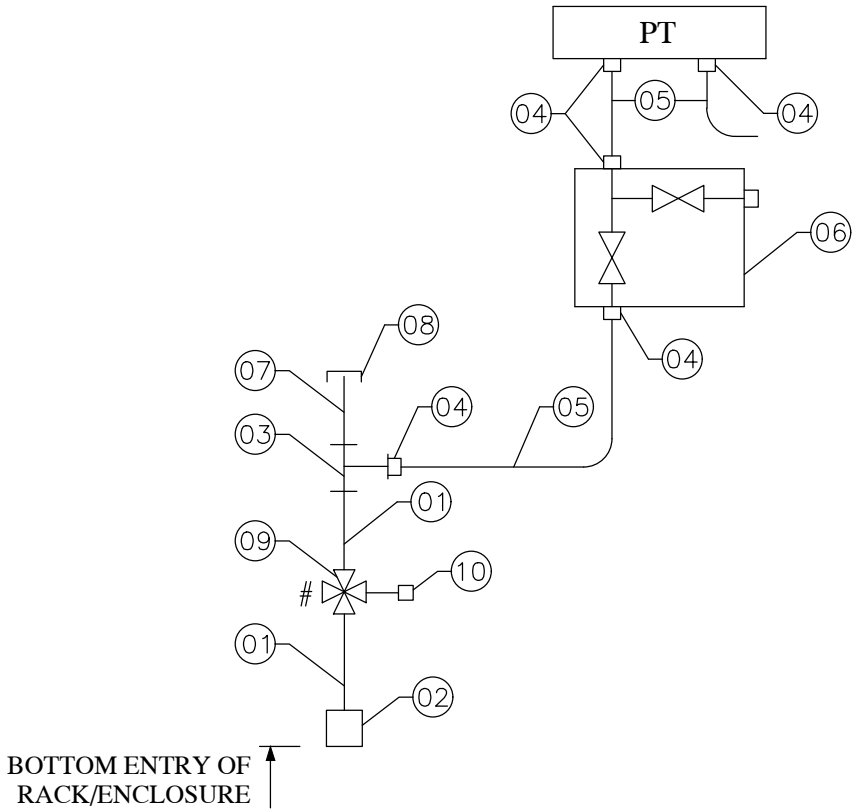

NOTES:

01. "TRANSMITTER ABOVE SOURCE"
02. FOR BILL OF MATERIAL REFER PAGE 29 OF 33
03. FOR INTERMITTANT PURGING REFER PAGE 32 & 33 OF 33

CE/416/NON-NTPC/RC/HUP

REV. NO. 00

PAGE NO.: 28 OF 33

ITEM NO	ITEM DESCRPTION	QNTY/INST. (Nos.)
01	SEAMLESS PIPE MATL: A335 P22 SIZE: 3/4" NB-SCH 80	A/R
02	BULKHEAD COUPLING / AS PER ANSI B16.11 MATL: ASTM A182 F22 SIZE: 3/4" NB-SW / CL: 3000	01
03	FORGED UNEQUAL TEE / AS PER ANSI B16.11 MATL: ASTM A182 F22 SIZE: 2 x 3/4" NB-SW X 1/2" NPTF / CL: 3000	01
04	MALE CONNECTOR MATL: SS316 SIZE: 1/2" NPTM x TO SUIT 1/2" OD SS TUBE	05
05	SEAMLESS TUBE MATL: ASTM A213 TP316L SIZE: 1/2" OD x 1.13mm THK	A/R
06	TWO VALVE MANIFOLD BODY: SS316 PORT SIZE: 1/2" NPTF / PR. TESTING: 3000 PSI	01
07	NIPPLE MATL: A335 P22 SIZE: 3/4" NB-SCH 80	01
08	CAP MATL: ASTM A182 F22 SIZE: 3/4" NPTF	01
09	FOUR WAY VALVE MATL.: ASTM A182 F22 / RATING CLASS 800 SIZE: (2 x 3/4" NB-SW) x (2 x 1/2" NPTF)	01
10	QUICK DISCONNECTING FITTING MATL.: SS 304 SIZE.:1/2" NPTM	01

COPY RIGHT AND CONFIDENTIAL
The information on this document is the property of Bharat Heavy Electricals Limited.
It must not be used directly or indirectly in anyway detrimental to the interest to the Company.

REVISION NO	DATE

COPY RIGHT AND CONFIDENTIAL
The information on this document is the property of Bharat Heavy Electricals Limited.
It must not be used directly or indirectly in anyway detrimental to the interest to the Company.

A4 - 10

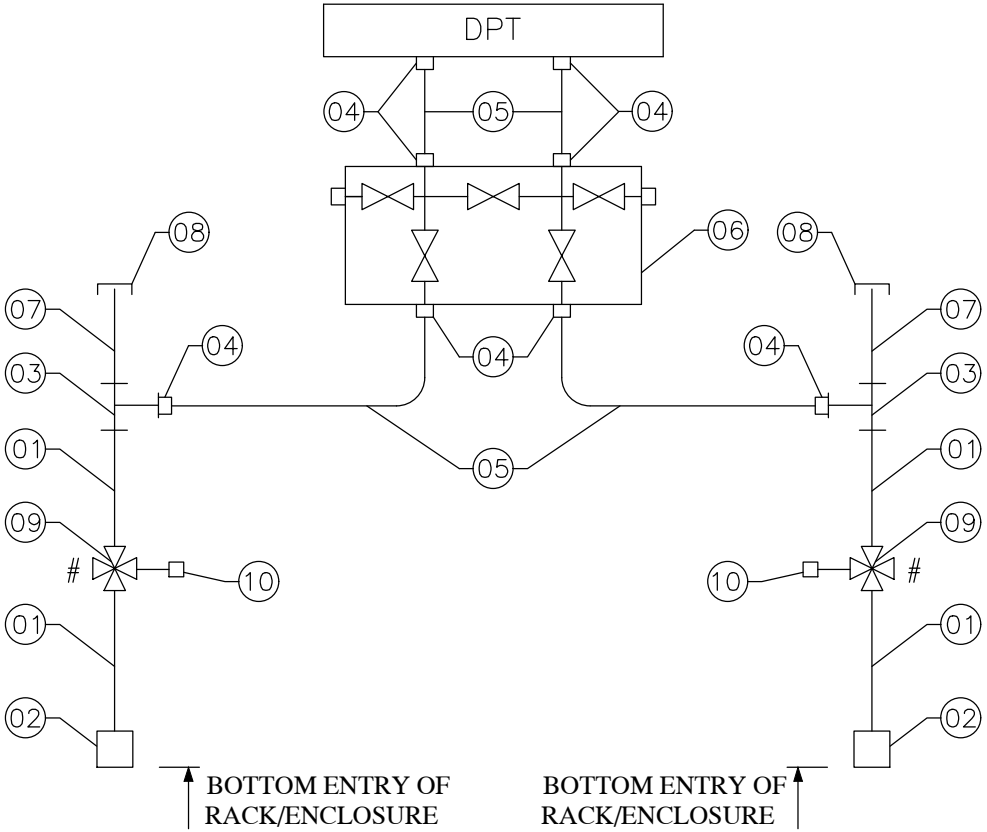

NOTES:

01. "TRANSMITTER ABOVE SOURCE"
02. FOR BILL OF MATERIAL REFER PAGE 31 OF 33
03. FOR INTERMITTANT PURGING REFER PAGE 32 & 33 OF 33

CE/416/NON-NTPC/RC/HUP

REV. NO. 00

ITEM NO	ITEM DESCRPTION	QNTY/INST. (Nos.)
01	SEAMLESS PIPE MATL: A335 P22 SIZE: 3/4" NB-SCH 80	A/R
02	BULKHEAD COUPLING / AS PER ANSI B16.11 MATL: ASTM A182 F22 SIZE: 3/4" NB-SW / CL: 3000	02
03	FORGED UNEQUAL TEE / AS PER ANSI B16.11 MATL: ASTM A182 F22 SIZE: 2 x 3/4" NB-SW X 1/2" NPTF / CL: 3000	02
04	MALE CONNECTOR MATL: SS316 SIZE: 1/2" NPTM x TO SUIT 1/2" OD SS TUBE	08
05	SEAMLESS TUBE MATL: ASTM A213 TP316L SIZE: 1/2" OD x 1.13mm THK	A/R
06	FIVE VALVE MANIFOLD BODY: SS316 PORT SIZE: 1/2" NPTF / PR. TESTING: 3000 PSI	01
07	NIPPLE MATL: A335 P22 SIZE: 3/4" NB-SCH 80	02
08	CAP MATL: ASTM A182 F22 SIZE: 3/4" NPTF	02
09	FOUR WAY VALVE MATL.: ASTM A182 F22 / RATING CLASS 800 SIZE: (2 x 3/4" NB-SW) x (2 x 1/2" NPTF)	02
10	QUICK DISCONNECTING FITTING MATL.: SS 304 SIZE.:1/2" NPTM	02

COPY RIGHT AND CONFIDENTIAL
The information on this document is the property of Bharat Heavy Electricals Limited.
It must not be used directly or indirectly in anyway detrimental to the interest to the Company.

REVISION NO	DATE

COPY RIGHT AND CONFIDENTIAL
The information on this document is the property of Bharat Heavy Electricals Limited.
It must not be used directly or indirectly in anyway detrimental to the interest to the Company.

A4 – 10

TYPICAL AIR PURGING SCHEME

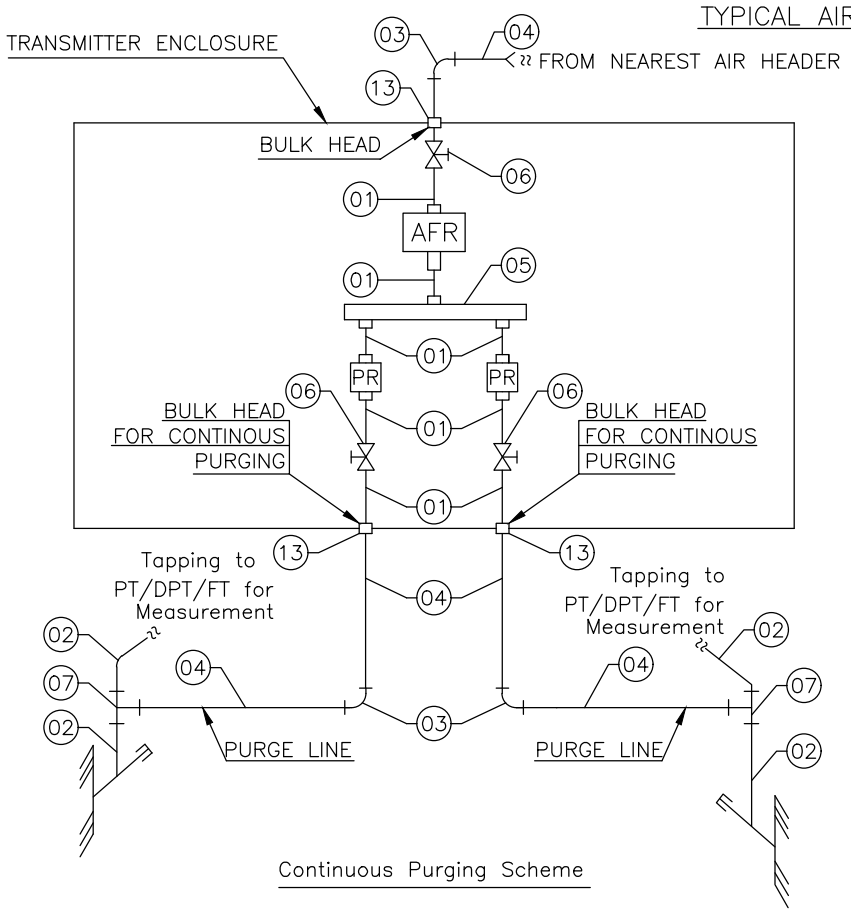

Continuous Purging Scheme

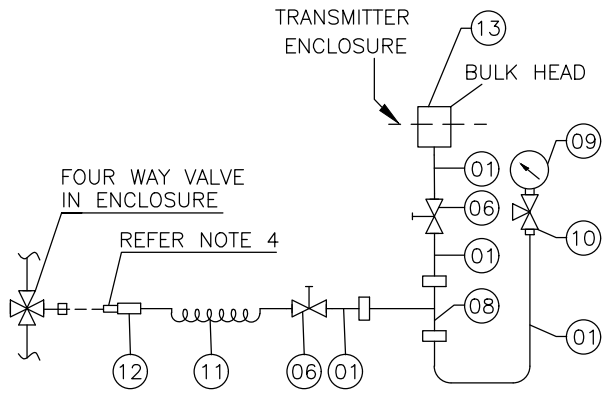

Intermittent Purging Scheme

NOTES:

01. ABBREVIATIONS

PT	–	PRESSURE TRANSMITTERS
DPT / FT	–	DIFF. PRESSURE/FLOW TRANSMITTERS
AFR	–	AIR FILTER REGULATOR
PR	–	PURGE ROTAMETER

02. ABOVE SCHEME IS TYPICAL. PURGE ROTAMETERS WILL BE ONE NO. FOR EACH OF PURGE LINE AS SHOWN.
03. AIR FILTER REGULATORS SHALL BE SET BETWEEN 0.4 TO 0.6 KG/CM2 APPROX.
04. THIS QUICK DISCONNECT FITTING IS CONNECTED TO FOUR WAY VALVE WHEREVER INTERMITTENT PURGING IS CALLED IN SCHEMES.
05. FOR BILL OF MATERIAL REFER PAGE 33 OF 33

ITEM NO.	ITEM DESCRIPTION
01	SEAMLESS TUBE MATL.: SS 316 SIZE: 1/2" OD TUBE X 1.1 mm THICK
02	SEAMLESS PIPE MATL.: ASTM A 106 Gr. C SIZE: 3/4" NB SCH 80
03	GALVANISED ELBOW MATL.: A 105 SIZE: 1/2" NPTF
04	GI PIPE MATL.: IS 1239 HEAVY GRADE SIZE: 1/2" NB
05	AIR HEADER MATL.: SS304 SIZE: 1" NB PIPE
06	BALL VALVE MATL.: A 105 SIZE: TO SUIT 1/2" OD SS TUBE
07	UNEQUAL TEE MATL.: A 105 SIZE: 2 X 3/4" NB–SW X 1/2" NPTF
08	EQUAL TEE BODY: SS316 PORT SIZE: TO SUIT 1/2" OD SS TUBE
09	PR. GAUGE CONNECTION:. 1/2" NPTM SIZE: 4" DIAL SIZE / RANGE : 0 – 10 Kg / Cm2
10	3 WAY GUAGE COCK MATL.:SS304 SIZE: 1/2" NPTF x TO SUIT 1/2" SS TUBE
11	NYLON HOSE WITH SS BRAIDING TO SUIT 1/2" END CONNECTION PR TESTING 10 kg/cm2
12	QUICK DISCONNECTING FITTING MATL:. SS304 SIZE: MALE END CONN. TO SUIT 1/2" OD CONNECTION
13	BULK HEAD UNION MATL:. ASTM A105 SIZE: 1/2" NPTF X 1/2" NPTF

COPY RIGHT AND CONFIDENTIAL
The information on this document is the property of Bharat Heavy Electricals Limited.
It must not be used directly or indirectly in anyway detrimental to the interest to the Company.

DATE

REVISION NO

PROJECT: RATE CONTRACT FOR LIE/LIR

CUSTOMER: M/s TNPGCL, ADANI POWER

COPY RIGHT AND CONFIDENTIAL

THE INFORMATION ON THIS DOCUMENT IS THE PROPERTY OF BHARAT HEAVY ELECTRICALS LIMITED. IT MUST NOT BE USED DIRECTLY OR INDIRECTLY IN ANY WAY DETRIMENTAL TO THE INTEREST OF THE COMPANY.

SCHEMATIC DRAWINGS
FOR
LOCAL INSTRUMENT ENCLOSURE / RACKS
(LIE / LIR)

REVISIONS :	APPROVED BY		
	AMITKUMAR SHARMA		
	PREPARED BY	ISSUED	DATE
	RAJESH LINGUTLA	416	21/09/26

FIRST ANGLE PROJECTION

(ALL DIMENSIONS ARE IN mm)

DRG. No. CE/416/LIE/LIR/OGA1

COPYRIGHT AND CONFIDENTIAL
THE INFORMATION ON THIS DOCUMENT IS THE PROPERTY OF BHARAT HEAVY ELECTRICALS LTD. IT MUST NOT BE USED DIRECTLY OR INDIRECTLY IN ANY WAY DETRIMENTAL TO THE INTEREST OF THE COMPANY.

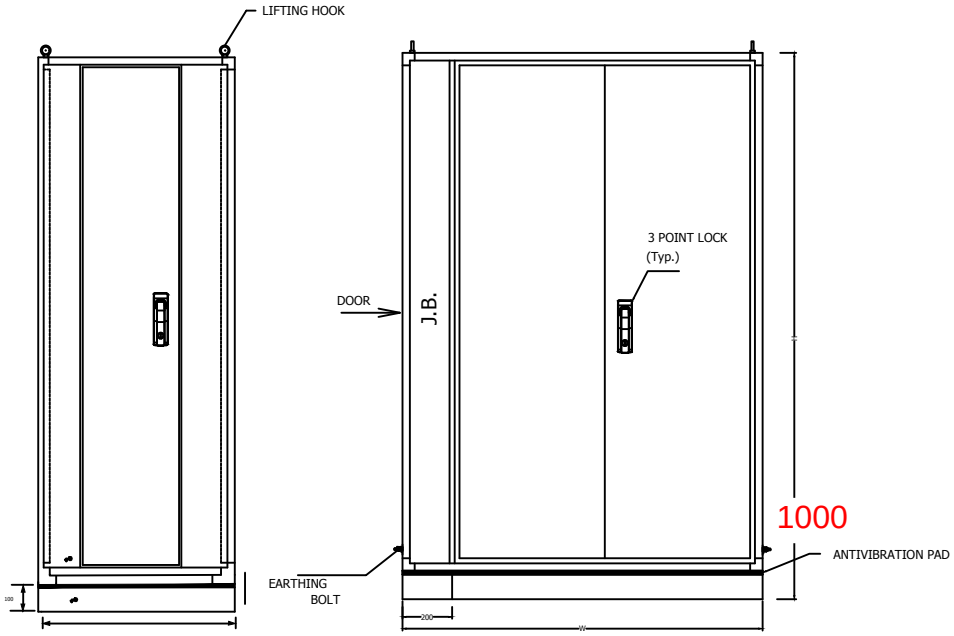

LH SIDE VIEW

FRONT VIEW

NOTES:–

1. ALL SHEETs ARE 3.0mm CRCA SHEET
2. ALL DOORS WILL BE FLUSH / CONCEALED TYPE
3. BASE FRAME SHALL BE MADE OF ISMC 100
4. BULK HEAD PLATE FOR TOP & BOTTOM SHALL BE PROVIDED
5. CABLE GLAND PLATE OF THICKNESS 3.0 mm. CRCA SHEET SHALL BE PROVIDED TOP AND BOTTOM OF J.B
6. ENCLOSURE SHALL BE OF IP–65 PROTECTION CLASS
7. TERMINAL SHALL BE PROVIDED IN SIDE THE J.B. AS PER TRANSMITTER GROUPING
8. DOORS SHALL BE THREE POINT LOCKING FOR FRONT AND REAR DOOR AND SIDE DOOR LEAF
9. GASKET SHALL BE PROVIDED BETWEEN BULK HEAD PLATE & ENCLOSURE
10. EARTH BUS BAR 25x6mm TINNED COPPER SHALL BE USED
11. 2 Nos. CFL 11W,230V AC WITH FIXTURE SHALL BE PROVIDED
12. DRAIN PIPE SLOPE WILL BE 1 : 25 APPROX.
13. POWER SOCKET SHALL BE PROVIDED IN J.B. OF ENCLOSURE

LIE TYPE	H	W	D
A	2200	1450	1000
B	2200	1100	1000
C	2200	800	1000

PROD / PROJ :

CUSTOMER:

REV.	DATE	ALTERED / CHECKED / APPROVED	REV.	DATE	ALTERED / CHECKED / APPROVED

	NAME	SIGN	DATE
DRAWN	HKS		15.04.2015
CHECKED	RKL		15.04.2015
APPROVED	AM		15.04.2015

DEPT. BPE | CODE 416

BHARAT HEAVY ELECTRICALS LIMITED.
ELECTRONICS DIVISION, BANGALORE

TITLE: OGA–FOR–LIE

No. OF SHEETS: 04

SHEET No.: 02

WBS. No.

DRG. No. CE/416/LIE/LIR/OGA1

REV 00

REF. DRG. No.

SIGN. & DATE

INVENTORY No.

FORM No. A3–03

A3 SIZE

FIRST ANGLE PROJECTION

(ALL DIMENSIONS ARE IN mm)

DRG. No. CE/416/LIE/LIR/OGA1

COPYRIGHT AND CONFIDENTIAL
THE INFORMATION ON THIS DOCUMENT IS THE PROPERTY OF BHARAT HEAVY ELECTRICALS LTD. IT MUST NOT BE USED DIRECTLY OR INDIRECTLY IN ANY WAY DETRIMENTAL TO THE INTEREST OF THE COMPANY.

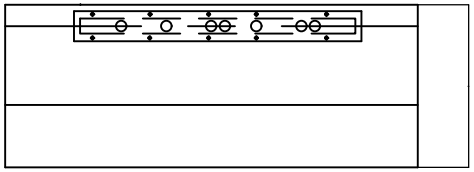

TOP VIEW

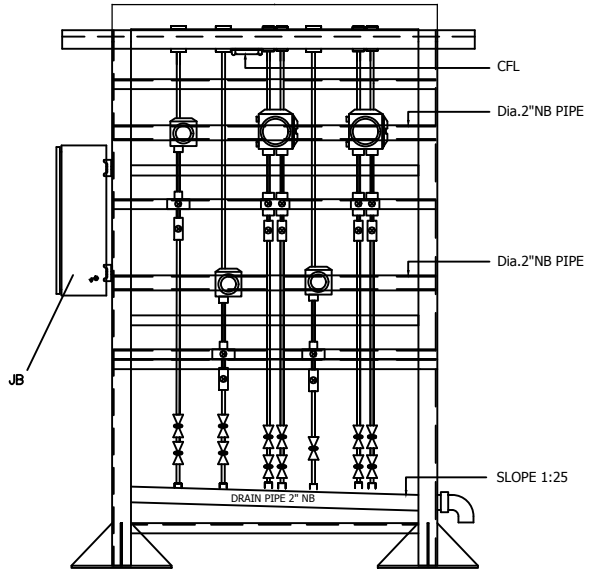

FRONT VIEW

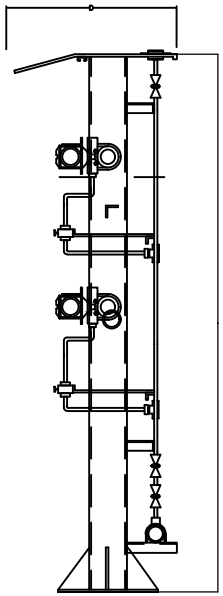

SIDE VIEW

NOTES:

1. JB TO BE LOCATED ON ONE SIDE OF THE LIR.
2. LIR's ARE WITH 2 LEGS.
3. SUPPORTING LEG SHALL BE MADE OF CHANNEL
4. BULK HEAD PLATE SHALL BE PROVIDED AT THE TOP
5. GASKET SHALL BE PROVIDED BETWEEN BULK HEAD PLATE & RACK
6. EARTH BUS BAR 25x6mm COPPER SHALL BE USED
7. 1 No CFL 11W,230V AC WITH FIXTURE SHALL BE PROVIDED
8. POWER SOCKET SHALL BE PROVIDED IN J.B. OF RACK
9. CANAPY ASSEMBLY WITH 3 MM THICK CRCA SHEET
10. TERMINALS SHALL BE PROVIDED IN SIDE THE JB AS PER GROUPING PROVIDED

LIR TYPE	H	W	D
A	2200	1400	650
B	2200	1100	650
C	1600	800	650
D	2200	1600	650

PROD / PROJ : –

CUSTOMER: –

REV.	DATE	ALTERED –	REV.	DATE	ALTERED –
–	–	CHECKED –	–	–	CHECKED –
		APPROVED –			APPROVED –

	NAME	SIGN	DATE
DRAWN	HKS		15.04.2015
CHECKED	RKL		15.04.2015
APPROVED	AM		15.04.2015

DEPT. BPE | CODE 416

BHARAT HEAVY ELECTRICALS LIMITED.
ELECTRONICS DIVISION, BANGALORE

TITLE: OGA–FOR–LIR

No. OF SHEETS 04

SHEET No. 04

WBS. No. –

DRG. No. CE/416/LIE/LIR/OGA1

REV 00

REF. DRG. No. FLREF

SIGN. & DATE

INVENTORY No.

FORM No. A3–03

A3 SIZE

FIRST ANGLE PROJECTION

(ALL DIMENSIONS ARE IN mm)

DRG. No. CE/416/LIE/LIR/OGA1

COPYRIGHT AND CONFIDENTIAL
THE INFORMATION ON THIS DOCUMENT IS THE PROPERTY OF BHARAT HEAVY ELECTRICALS LTD. IT MUST NOT BE USED DIRECTLY OR INDIRECTLY IN ANY WAY DETRIMENTAL TO THE INTEREST OF THE COMPANY.

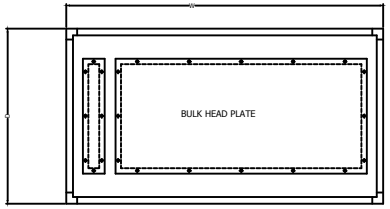

TOP VIEW

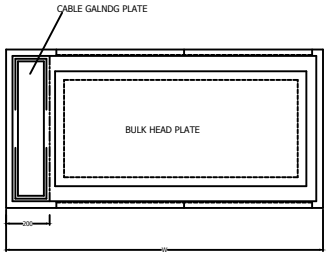

BOTTOM VIEW

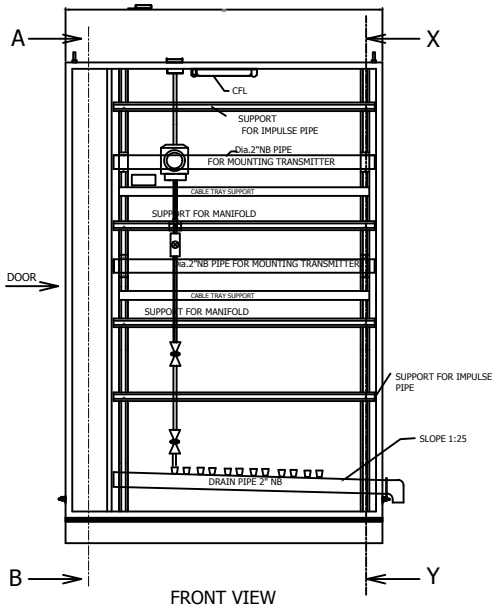

FRONT VIEW

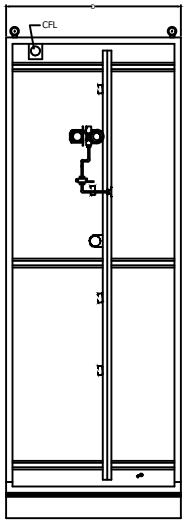

SIDE VIEW FROM X-Y

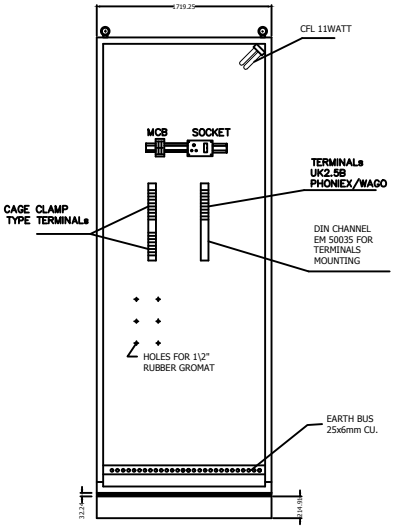

SIDE VIEW FROM A-B

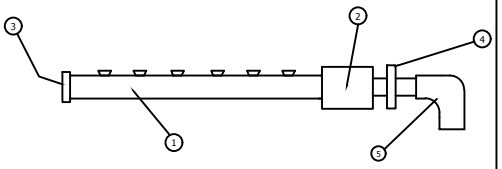

DRAIN PIPE

ITEM	DESCRIPTION	QTY.
1	2" NB ASTM A-106' SCH80/GR-C	A/R
2	2" NBSW X 1" NPT(F) COUPLING CS ASTM A105	1No.
3	2" S.W.CAP,CS ASTM A105	1No.
4	1" NPT (M) X1" BSP(M) HEX. COUPLING, CS ASTM105	1No.
5	1" BSP (F) ELBOW, CS ASTM A105	1No.

PROD / PROJ :

CUSTOMER:

REV.	DATE	ALTERED	REV.	DATE	ALTERED
		CHECKED			CHECKED
		APPROVED			APPROVED

	NAME	SIGN	DATE
DRAWN	HKS		15.04.2015
CHECKED	RKL		15.04.2015
APPROVED	AM		15.04.2015

DEPT.	CODE
BPE	416

BHARAT HEAVY ELECTRICALS LIMITED.
ELECTRONICS DIVISION, BANGALORE

TITLE: OGA–FOR–LIE

No. OF SHEETS: 04

SHEET No.: 03

WBS. No.

DRG. No. CE/416/LIE/LIR/OGA1

REV 00

REF. DRG. No.

SIGN. & DATE

INVENTORY No.

FORM No. A3–03

A3 SIZE

PROJECT: RATE CONTRACT FOR LIE/LIR

CUSTOMER: M/s TNPGCL, ADANI POWER

COMPONENT VENDOR LIST

COPY RIGHT AND CONFIDENTIAL

THE INFORMATION ON THIS DOCUMENT IS THE PROPERTY OF BHARAT HEAVY ELECTRICALS LIMITED. IT MUST NOT BE USED DIRECTLY OR INDIRECTLY IN ANY WAY DETRIMENTAL TO THE INTEREST OF THE COMPANY.

REVISIONS :

APPROVED BY		
AMITKUMAR SHARMA		
PREPARED BY	ISSUED	DATE
RAJESH LINGUTLA	416	21/09/26

COPY RIGHT AND CONFIDENTIAL
THE INFORMATION ON THIS DOCUMENT IS THE PROPERTY OF BHARAT HEAVY ELECTRICALS LIMITED . IT MUST NOT BE USED DIRECTLY OR INDIRECTLY IN ANY WAY DETRIMENTAL TO THE INTEREST OF THE COMPANY.

SUB COMPONENT VENDOR LIST

Sl No	Item Description	Approved Vendors
1	Socket Weld Fittings	PRECISION ENGG INDUSTRIES, MUMBAI
		EXCEL HYDRO-PNEUMATICS PVT LTD,MUMBAI
		METPRESS ENGINEERING WORKS,KOLKATA
		BALDOTA VALVE AND FITTINGS PVT LTD,MUMBAI
		ARCELLOR CONTROLS ,AHMEDABAD
		HP VALVES & FITTINGS (INDIA) PVT. LTD,CHENNAI
2	Compression Fitting	ARCELLOR CONTROLS (INDIA)
		EXCEL HYDRO-PNEUMATICS PVT LTD, MUMBAI
		PRECISION ENGG INDUSTRIES, MUMBAI
		METPRESS ENGINEERING WORKS,KOLKATA
		HP VALVES & FITTINGS (INDIA) PVT. LTD, CHENNAI
		PRECISION ENGG INDUSTRIES
		SWAGELOCK,USA
		PARKER HANNIFIN INDIA PVT LTD CHENGALPATTU
3	Instrument Valves	BHARAT HEAVY ELECTRICALS LIMITED VALVES DIVISION, TIRUCHIRAPALLI, TAMILANADU.
		AURA INC.
		PARKER ,USA
		EXCEL HYDRO-PNEUMATICS PVT LTD,MUMBAI
		PRECISION ENGG INDUSTRIES, MUMBAI
		BALDOTA VALVE AND FITTINGS PVT LTD,MUMBAI
		HP VALVES & FITTINGS (INDIA) PVT. LTD,CHENNAI
		METPRESS ENGINEERING WORKS,KOLKATA
		SWAGELOK, USA
4	Valve Manifolds	ARCELLOR CONTROLS (INDIA)
		AURA INC.
		BALDOTA VALVE AND FITTINGS PVT LTD,MUMBAI
		EXCEL HYDRO-PNEUMATICS PVT LTD
		PARKER HANNIFIN (SUPER TECHNICAL DEALER PARKER)
		HP VALVES & FITTINGS (INDIA) PVT. LTD,CHENNAI
		METPRESS ENGINEERING WORKS,KOLKATA
		PRECISION ENGG INDUSTRIES
5	Air Filter Regulator	SHAVO NORGEN, MUMBAI
		DIVYA CONTROL ELEMENTS PVT LTD
		PARKER HANNIFIN
		PLACKA INSTRUMENTS INDIA PVT LTD

COPY RIGHT AND CONFIDENTIAL
THE INFORMATION ON THIS DOCUMENT IS THE PROPERTY OF BHARAT HEAVY ELECTRICALS LIMITED . IT MUST NOT BE USED DIRECTLY OR INDIRECTLY IN ANY WAY DETRIMENTAL TO THE INTEREST OF THE COMPANY.

SUB COMPONENT VENDOR LIST

Sl No	Item Description	Approved Vendors
6	Impulse Pipes / Seamless Tube (CARBON STEEL)	MAHRASTRA SEAMLESS, RAIGARH
		HEAVY MEATAL TUBES, AHMADABAD
		TPS TECHNITUBE ROHREN WERKE GMBH, GERMANY
		INDIAN SEAMLESS METAL TUBES LTD, PUNE
		BHARAT HEAVY ELECTRICALS LTD, TRICHY
		SUMITOMO CORPORATION ,JAPAN
7	Impulse Pipes / Seamless Tube (STAINLESS STEEL)	SUMITOMO CORPORATION ,JAPAN
		TPS TECHNITUBE ROHREN WERKE GMBH, GERMANY
		RATNAMANI METALS & TUBES LTD,
		MAXIM TUBE COMPANY PVT LTD, CHATRAL, GUJARAT
		HEAVY MEATAL TUBES, AHMADABAD
8	Impulse Pipes / Seamless Tube (ALLOY STEEL)	BHARAT HEAVY ELECTRICALS LTD, TRICHY
		SUMITOMO CORPORATION ,JAPAN
		TPS TECHNITUBE ROHREN WERKE GMBH, GERMANY
		INDIAN SEAMLESS METAL TUBES LTD, PUNE
		HEAVY MEATAL TUBES, AHMADABAD
9	Instrument cables	CORDS, BHIWADI
		KEI, BHIWADI
		DELTON, FARIDABAD
		UNIVERSAL CABLE, SATNA.
		LAPP INDIA.
		KEC INTERNATIONAL (RPG) VADODARA/SILVASSA
		THERMOCABLES LTD,HYDERBAD
		POLYCAB ,DAMAN
		HAVELLS INDIA, ALWAR
		PARAMOUNT COMMUNICATIONS LTD, KHUSKHERA
		CMI, FARIDABAD
		GEMSCAB INDUSTRIES LTD, BHIWADI
		SUYOG ELECTRICALS LTD, HALOL (GUJRAT)
		SPECIAL CABLES PVT LTD, UTTARKHAND
		T C COMMUNICATION

Note: Bidders Can Propose additional sub component vendors for above items with unpriced PO Copies and catalogs etc, However if same is not approved by customer/BHEL vendors to provide sub component makes from the approved list without any price impact.

PROJECT: RATE CONTRACT FOR LIE/LIR

CUSTOMER: M/s TNPGCL, ADANI POWER

COPY RIGHT AND CONFIDENTIAL

THE INFORMATION ON THIS DOCUMENT IS THE PROPERTY OF BHARAT HEAVY ELECTRICALS LIMITED. IT MUST NOT BE USED DIRECTLY OR INDIRECTLY IN ANY WAY DETRIMENTAL TO THE INTEREST OF THE COMPANY.

TYPICAL QUALITY CHECK LIST

REVISIONS :

APPROVED BY

AMITKUMAR SHARMA

PREPARED BY	ISSUED	DATE
RAJESH LINGUTLA	416	21/09/26

	MANUFACTURER'S NAME & ADDRESS	MANUFACTURING QUALITY PLAN	
		ITEM : LOCAL INSTRUMENT ENCLOSURE & LOCAL INSTRUMENT RACK	QP Ref NO.: CE/416/LIE-LIR/QP REV. : 00 DT. :11.09.2026 PAGE : 02 OF 06

S. NO.	COMPONENTS & OPERATIONS	CHARACTERISTICS	CLASS	TYPE OF CHECK	QUANTUM OF CHECK	REFERENCE DOCUMENT	ACCEPTANCE NORMS	FORMAT OF RECORD	AGENCY D*	M	C	E	REMARKS
1	2	3	4	5	6	7	8	9		**10			11
(A)	***MATERIAL***												
1	CRCA SHEET	A) MATERIAL	MAJOR	CHEMICAL COMPOSITION	SAMPLE	IS-513 APP.DRG	IS-513	M.T.C./Q.A.REP.		V	V	V	
		B) THICKNESS	MAJOR	MEASUREMENT	100%	APP.DRG	APP.DRG	M.T.C./Q.A.REP.		P	V	V	
		C) HARDNESS	MAJOR	STRENGTH	SAMPLE	IS-513	IS-513	M.T.C./Q.A.REP.		V	V	V	
		D) SURFACE FINISH	MAJOR	VISUAL	100%	IS-513	IS-513	M.T.C./Q.A.REP.		P	V	V	
2	MS C- CHANNELS / MS ANGLE	A) DIMENSION	MAJOR	VISUAL	100%	APP.DRG/ F.S.	APP.DRG/ F.S.	M.T.C./Q.A.REP.		P	V	V	
		B) SURFACE DEFECTS	MAJOR	VISUAL	100%	APP.DRG/ F.S.	APP.DRG/ F.S.	M.T.C./Q.A.REP.		V	V	V	
		C) STRAIGHTNESS	MAJOR	MESUERMENT	100%	APP.DRG/ F.S.	APP.DRG/ F.S.	M.T.C./Q.A.REP.		V	V	V	
3	GASKET	A) DIMENSION	MAJOR	MEASUREMENT	SAMPLE	APP.DRG/ F.S.	APP.DRG/ F.S.	M.T.C./Q.A.REP.		P	V	V	
		B) HARDNESS/SHORE HARDNESS	MAJOR	MEASUREMENT	SAMPLE	APP.DRG/ F.S.	APP.DRG/ F.S.	M.T.C.		V	V	V	
4	TERMINALS	A) TYPE, SIZE & MAKE	MAJOR	VISUAL	100%	APP.DRG	APP.DRG	M.T.C./Q.A.REP.		P	V	V	

		LEGEND : * RECORDS, INDENTIFIED WITH `TICK' SHALL BE ESSENTIALLY INCLUDED BY CONTRACTOR IN QA DOCUMENTATION. ** M : MANUFACTURER/ SUBCONTRACTOR C: CONTRACTOR/ NOMINATED INSPECTION AGENCY E : END USER INDICATE `P' PERFORM, `W' WITNESS AND `V' VERIFICATION AS APPROPRIATE "CHP" END USER SHALL IDENTIFIED IN COLUMN `E'	FOR END USER :	DOC. NO.
MANUFACTURER /SUBCONTRACTOR	CONTRACTOR			
SIGNATURE			REVIEWED BY	NAME & SIGN OFAPPROVING AUTHORITY WITH SEAL

	MANUFACTURER'S NAME & ADDRESS	MANUFACTURING QUALITY PLAN	
		ITEM : LOCAL INSTRUMENT ENCLOSURE & LOCAL INSTRUMENT RACK	QP Ref NO.: CE/416/LIE-LIR/QP REV. : 00 DT. : 11.09.2026 PAGE : 03 OF 06

S. NO.	COMPONENTS & OPERATIONS	CHARACTERISTICS	CLASS	TYPE OF CHECK	QUANTUM OF CHECK	REFERENCE DOCUMENT	ACCEPTANCE NORMS	RECORD	D*	M	C	E	REMARKS
1	2	3	4	5	6	7	8	9		**10			11
5	PVC WIRE/ CABLE	A) TYPE, SIZE, MAKE	MAJOR	MEASUREMENT	SAMPLE	IS 694/APPD. APP.DRG	IS 694/APPD. APP.DRG	M.T.C./Q.A.REP.		P	V	V	
6	PAINT	A) SHADE	MAJOR	VISUAL	SAMPLE	APP. DRG	APP. DRG	M.T.C./Q.A.REP.		P	V	V	
		B) FINISH	MAJOR	VISUAL	SAMPLE	APP. DRG	APP. DRG	M.T.C./Q.A.REP.		P	V	V	
7	FLEXIBLE CONDUIT / M.S. CABLE TRAY	A) TYPE, SIZE & MAKE	MAJOR	VISUAL	SAMPLE	APP.DRG	APP.DRG	M.T.C./Q.A.REP.		P	V	V	
(B)	***COMPONENTS ****												* TYPE / MODEL /RANGE OF COMPONENTS AS PER BOM OF LIE/ LIR .
1	VALVES, MANIFOLDS	MECHANICAL	MAJOR	A)CHEM. TEST	SAMPLE	SUPPLIER CAT./ APP.DRG	SUPPLIER CAT./ APP.DRG	M.T.C./Q.A.REP.		V	V	V	
				B)FUNCTIONAL	100%	-DO-	-DO-	M.T.C./Q.A.REP.		P	V	V	
				C) DIMENSION	100%/SAM.	-DO-	-DO-	M.T.C./Q.A.REP.		P	V	V	
				D)HYDROSTA-TIC	10%	-DO-	-DO-	M.T.C./Q.A.REP.		V	V	V	
2	FITTINGS	MECHANICAL	MAJOR	A)CHEM. TEST	SAMPLE	-DO-	-DO-	M.T.C./Q.A.REP.		V	V	V	
				B) DIMENSION	100%/SAM.	-DO-	-DO-	M.T.C./Q.A.REP.		P	V	V	
				C)HYDROSTA-TIC	10%	-DO-	-DO-	M.T.C./Q.A.REP.		V	V	V	
3.a	PIPES	MECHANICAL	MAJOR	A)CHEM. & PHY. TEST	SAMPLE	-DO-	-DO-	M.T.C./Q.A.REP. M.T.C./Q.A.REP.		V	V	V	
				B) DIMENSION	100%/ SAM.	-DO-	-DO-	M.T.C./Q.A.REP.		P	V	V	

		LEGEND : * RECORDS, INDENTIFIED WITH `TICK' SHALL BE ESSENTIALLY INCLUDED BY CONTRACTOR IN QA DOCUMENTATION. ** M : MANUFACTURER/ SUBCONTRACTOR C: CONTRACTOR/ NOMINATED INSPECTION AGENCY E : END USER INDICATE `P' PERFORM, `W' WITNESS AND `V' VERIFICATION AS APPROPRIATE "CHP" END USER SHALL IDENTIFIED IN COLUMN `E'	FOR END USER :	DOC. NO.
MANUFACTURER /SUBCONTRACTOR	CONTRACTOR			
SIGNATURE			REVIEWED BY	NAME & SIGN OFAPPROVING AUTHORITY WITH SEAL

MANUFACTURER'S NAME & ADDRESS	MANUFACTURING QUALITY PLAN	
	ITEM : LOCAL INSTRUMENT ENCLOSURE & LOCAL INSTRUMENT RACK	QP Ref NO.: CE/416/LIE-LIR/QP REV. : 00 DT. : 11.09.2026 PAGE : 04 OF 06

S. NO.	COMPONENTS & OPERATIONS	CHARACTERISTICS	CLASS	TYPE OF CHECK	QUANTUM OF CHECK	REFERENCE DOCUMENT	ACCEPTANCE NORMS	RECORD	D*	M	C	E	REMARKS
1	2	3	4	5	6	7	8	9		**10			11
3.b	TUBES	MECHANICAL	MAJOR	A)CHEM. & PHY. TEST	SAMPLE	SUPPLIER CAT./ APP.DRG	SUPPLIER CAT./ APP.DRG	M.T.C./Q.A.REP.		V	V	V	
				B) DIMENSION	100%	-DO-	-DO-	M.T.C./Q.A.REP.		P	V	V	
				C) HYDROSTA-TIC	10%	-DO-	-DO-	M.T.C./Q.A.REP.		P	V	V	
(C)	**INPROCESS**												
1	FABRICATED/CUBICLE AND COMPONENTS	A) DIMENSION	CRITICAL	MEASUREMENT	100%	APP.DRG	APP.DRG	Q.A. REPORT		P	V	V	
		B) LIFTING FACILITY	CRITICAL	VISUAL	100%	APP.DRG	APP.DRG	Q.A. REPORT		P	V	V	
		C) CABLE ENTRY	CRITICAL	VISUAL	100%	APP.DRG	APP. APP.DRG	Q.A. REPORT		P	V	V	
		D) STRAIGHTNESS / WAVINESS	CRITICAL	VISUAL	100%					P	V	V	
		E) GASKET ARGMNT.	CRITICAL	VISUAL	100%	APP.DRG	APP.DRG	Q.A. REPORT		P	V	V	
		F) DEBURRING	CRITICAL	VISUAL	100%	APP.DRG	APP.DRG	Q.A. REPORT		P	V	V	
		G) WELDING	CRITICAL	VISUAL	100%	APP.DRG	APP.DRG	Q.A. REPORT		P	V	V	
		H) REMOVAL OF WELDING SLAGS	CRITICAL	VISUAL	100%	APP.DRG	APP.DRG	Q.A. REPORT		P	V	V	

		LEGEND : * RECORDS, INDENTIFIED WITH `TICK' SHALL BE ESSENTIALLY INCLUDED BY CONTRACTOR IN QA DOCUMENTATION. ** M : MANUFACTURER/ SUBCONTRACTOR C: CONTRACTOR/ NOMINATED INSPECTION AGENCY E : END USER INDICATE `P' PERFORM, `W' WITNESS AND `V' VERIFICATION AS APPROPRIATE "CHP" END USER SHALL IDENTIFIED IN COLUMN `E'	FOR END USER :
MANUFACTURER /SUBCONTRACTOR	CONTRACTOR		
SIGNATURE			REVIEWED BY

DOC. NO.

NAME & SIGN OFAPPROVING AUTHORITY WITH SEAL

	MANUFACTURER'S NAME & ADDRESS	MANUFACTURING QUALITY PLAN	
		ITEM : LOCAL INSTRUMENT ENCLOSURE & LOCAL INSTRUMENT RACK	QP Ref NO.: CE/416/LIE-LIR/QP REV. : 00 DT. : 11.09.2026 PAGE : 05 OF 06

S. NO.	COMPONENTS & OPERATIONS	CHARACTERISTICS	CLASS	TYPE OF CHECK	QUANTUM OF CHECK	REFERENCE DOCUMENT	ACCEPTANCE NORMS	FORMAT OF RECORD		AGENCY M	C	E	REMARKS
1	2	3	4	5	6	7	8	9	D*	**10			11
2	PRETREATMENT (7 TANK PROCESS)	A) DEGREASING	CRITICAL	VISUAL	100%	IS- 6005/F.S.	IS- 6005/F.S.	Q.A. REPORT		P	V	V	
		B) DERUSTING	CRITICAL	VISUAL	100%	IS- 6005/F.S.	IS- 6005/F.S.	Q.A. REPORT		P	V	V	
		C) PHOSPHATISING	CRITICAL	MEASUREMENT	100%	IS- 6005/F.S.	IS- 6005/F.S.	Q.A. REPORT		P	V	V	
		D) PASSIVATION	CRITICAL	VISUAL	100%	IS- 6005/F.S.	IS- 6005/F.S.	Q.A. REPORT		P	V	V	
3	SURFACE PREPARA- -TION & PAINTING	A) PRIMER(2 COATS)	CRITICAL	VISUAL	100%	APP.DRG	APP.DRG	Q.A.REPORT		P	V	V	
		B) SURFACER	CRITICAL	VISUAL	100%	APP.DRG	APP.DRG	Q.A.REPORT		P	V	V	
		C) FINAL PAINTING	CRITICAL	VISUAL	100%	APP.DRG	APP.DRG	Q.A.REPORT		P	V	V	
		D) THICKNESS	CRITICAL	MEASUREMENT	SAMPLE	APP.DRG	APP.DRG	Q.A.REPORT		P	V	V	
4	ELECTRICAL & MECH.	A) CHECK ARRANGE / LAYOUT OF COMP. & MOUNTING	CRITICAL	VISUAL	100%	APP.DRG	APP.DRG	Q.A.REPORT		P	V	V	
		B) WIRE CLAMPING & FERULING	CRITICAL	VISUAL	100%	APP.DRG	APP.DRG	Q.A.REPORT		P	V	V	
		C) INTERCONNECTION B/W COMPONENT	CRITICAL	VISUAL	100%	APP.DRG	APP.DRG	Q.A.REPORT		P	V	V	
		D)LUG SIZE&CRIMPING	CRITICAL	VISUAL	100%	APPD. APP.DRG	F.S./APP.DRG	Q.A.REPORT		P	V	V	
		E) COMPONENT IDENTIFICATION	CRITICAL	VISUAL	100%	APPD. APP.DRG	APP.DRG	Q.A.REPORT		P	V	V	
		F) WIRE SIZE	MAJOR	VISUAL	SAMPLE	IS-694 / APP.DRG	IS-694 / APP.DRG	M.T.C./QA REP.		P	V	V	
		G) NAME PLATES	CRITICAL	VISUAL	100%	APP.DRG	APP.DRG	Q.A.REPORT		P	V	V	
		H) PIPING	MAJOR	VISUAL	100%	APP.DRG	APP.DRG	Q.A.REPORT		P	V	V	

		LEGEND : * RECORDS, INDENTIFIED WITH `TICK' SHALL BE ESSENTIALLY INCLUDED BY CONTRACTOR IN QA DOCUMENTATION. ** M : MANUFACTURER/ SUBCONTRACTOR C: CONTRACTOR/ NOMINATED INSPECTION AGENCY E : END USER INDICATE `P' PERFORM, `W' WITNESS AND `V' VERIFICATION AS APPROPRIATE "CHP" END USER SHALL IDENTIFIED IN COLUMN `E'	FOR END USER :	DOC. NO.
MANUFACTURER /SUBCONTRACTOR	CONTRACTOR			
SIGNATURE			REVIEWED BY	NAME & SIGN OFAPPROVING AUTHORITY WITH SEAL

	MANUFACTURER'S NAME & ADDRESS	MANUFACTURING QUALITY PLAN	
		ITEM : LOCAL INSTRUMENT ENCLOSURE & LOCAL INSTRUMENT RACK	QP Ref NO.: CE/416/LIE-LIR/QP REV. : 00 DT. : 11.09.2026 PAGE : 06 OF 06

S. NO.	COMPONENTS & OPERATIONS	CHARACTERISTICS	CLASS	TYPE OF CHECK	QUANTUM OF CHECK	REFERENCE DOCUMENT	ACCEPTANCE NORMS	FORMAT OF RECORD		AGENCY M	C	E	REMARKS
1	2	3	4	5	6	7	8	9	D*	**10			11
D)	***FINAL INSPECTION***												
1	A) VERIFICATION OF COMPONENTS /RATING/ ARRANGEMENTS/ LOCATION FOR EASY ACCESSABILITY AND MAINTENANCE .		CRITICAL	VISUAL	100%/SAM.	APP.DRG	APP.DRG	Q.A. REPORT		P	W	W	
	B) COMPLETENESS OF WIRING ,TUBING/ PIPING		CRITICAL	VISUAL	100%/SAM.	APP.DRG	APP.DRG	Q.A. REPORT		P	W	W	
	C) TERMINAL ARRANGEMENTS,SPARE TER- -MINALS , EARTH BUS TIN PLATED COPPER)		CRITICAL	VISUAL	100%/SAM.	APP.DRG	APP.DRG	Q.A. REPORT		P	W	W	
	D) PAINT SHADE,THICKNESS & ADHESION		CRITICAL	MEASUREMENT	SAMPLE	APP.DRG	APP.DRG	Q.A. REPORT		P	W	W	
	E) DOOR ALIGNMENT		MAJOR	VISUAL	100%/SAM.	APP.DRG	APP.DRG	Q.A. REPORT		P	W	W	
	F) GENERAL APPEARENCE (STRAIGHTNESS, FREE FROM SCRATCHES, BENDS, DENTS AND SHEET THICKNESS)		MAJOR	VISUAL	100%/SAM.	APP.DRG	APP.DRG	Q.A. REPORT		P	W	W	
	G) HYDROSTATIC TEST FOR ASSEMBLY. (1.5 TIMES RATED PRESSURE)		CRITICAL	MECHANICAL	100%	APP.DRG	APP.DRG/ NO LEAK/ PRESSURE DROP	Q.A. REPORT		P	W	W	PERFORMED BY VENDOR 100 % BHEL WITNESS ON 10%
	(PNEUMATIC TEST FOR PURGING LINES (NO LEAKAGED WITH SOAP SOLUTION)												
2	OVERALL FINISH		MAJOR	VISUAL	100%/SAM.	APP.DRG	APP.DRG	Q.A. REPORT		P	W	W	
3	CONTINUITY TEST		MAJOR	FUNCTIONAL	100%/SAM.	APP.DRG	APP.DRG	Q.A. REPORT		P	W	W	
4	IR TEST		MAJOR	MEASUREMENT	100%/SAM.	APP.DRG	APP.DRG	Q.A. REPORT		P	W	W	
5	HV TEST		MAJOR	MEASUREMENT	100%/SAM.	APP.DRG	APP.DRG	Q.A. REPORT		P	W	W	
6	FUNCTIONAL TEST		MAJOR	FUNCTIONAL	100%/SAM.	APP.DRG	APP.DRG	Q.A. REPORT		P	W	W	
7	IP TEST	TYPE TEST	MAJOR	VERIFICATION	100%/SAM.	APP.DRG	APP.DRG	Q.A. REPORT		P	V	V	

M. T.C. = MANUFACTURER'S / MATERIAL TEST CERTIFICATE
F.S. = FACTORY STANDARD
NOTE :- CUSTOMER / INSPECTION AGENCY / END USER MAY DO INSPECTION ON SAMPLE BASIS

Q.A.REP.= QUALITY ASSURANCE REPORT
APP. APP.DRG = APPROVED DRAWING
SAM. = SAMPLE

LEGEND :
* RECORDS, INDENTIFIED WITH `TICK' SHALL BE ESSENTIALLY INCLUDED BY CONTRACTOR IN QA DOCUMENTATION.
** M : MANUFACTURER/ SUBCONTRACTOR
C: CONTRACTOR/ NOMINATED INSPECTION AGENCY E : END USER
INDICATE `P' PERFORM, `W' WITNESS AND `V' VERIFICATION
AS APPROPRIATE "CHP" END USER SHALL IDENTIFIED IN COLUMN `E'

MANUFACTURER /SUBCONTRACTOR	CONTRACTOR	REVIEWED BY	NAME & SIGN OFAPPROVING AUTHORITY WITH SEAL
SIGNATURE			