EDN BANGALORE	PURCHASE SPECIFICATION CHOPPER INDUCTOR 250µH, 91A	PS4062236 REV NO 05 PAGE 00 OF 05

SPECIFICATON FOR CHOPPER INDUCTOR 250µH, 91A

REVISION HISTORY SHEET

Rev No	Date	Nature of Change	Reasons	Prepared By	Approved By
00	27.03.2015	FIRST ISSUE		Hari	TJG
01	16.03.2016	Updation	Components list updated	Hari	TJG
02	29.07.2016	updation	Components list updated	Hari	TJG
03	19.04.2018	updation	Components list updated	Hari	TJG
04	14.12.2022	Updation	M4 Stud details updated	Hari	TJG
05	31.10.2023	Updation	Test details updated	Hari	TJG

COPY RIGHT AND CONFIDENTIAL
The information on this document is the property of Bharat Heavy Electricals Limited.
It must not be used directly or indirectly in anyway detrimental to the interest of the company.

APPROVED BY	T J GIRISH	
PREPARED BY HARI KALLURU	ISSUED BY SAE/406	DATE 27.03.2015

File No. EDN-SA0SAMP(PFE)/113/2025-EDN-SA/MM/PUR (Computer No. 147556)
Generated from eOffice by Venkata Mahesh Maruputi, MANAGER(VMM)-SA/MM/PUR-EDN, MANAGER, BHARAT HEAVY ELECTRICAL LTD on 13/03/2025 11:05 am

COPY RIGHT AND CONFIDENTIAL
The information on this document is the property of Bharat Heavy Electricals Limited.
It must not be used directly or indirectly in anyway detrimental to the interest of the company.

SPECIFICATION FOR CHOPPER INDUCTOR 250µH, 91A

1. Functional requirement:

This document covers specification of a chopper inductor used in Battery charger module. The inductor will be mounted in a cabinet/enclosure and will be used in traction applications for on board mounting. The block diagram is shown below. The inductor is part of 10kHz down chopper of battery charger, see grey area.

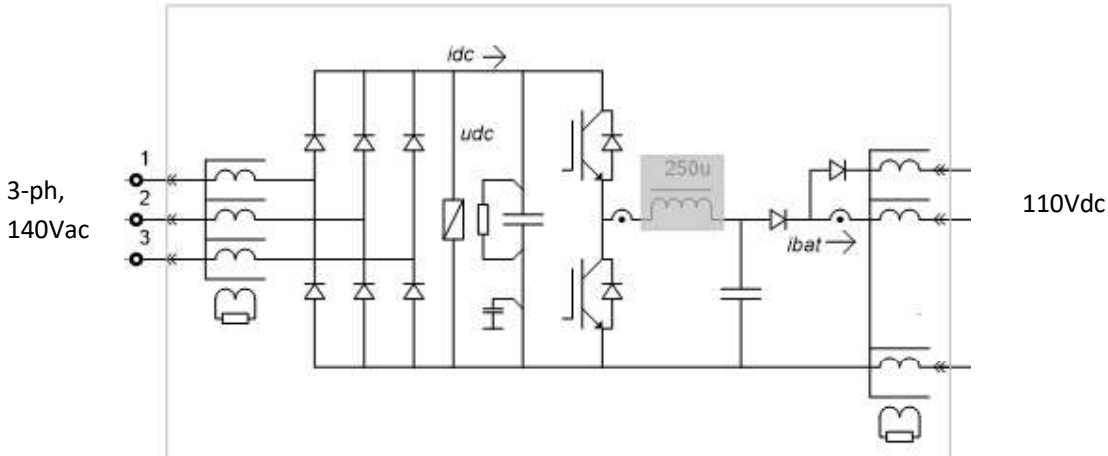

Application: Chopper Inductor 250uH, 91A

2. Reference standard:

The equipment shall comply with the latest issues of applicable IEC standards.

IEC61287-1	Power converters installed on board Rolling stoc
IEC61373	Railway applications – Rolling stock equipment – Shock and vibration tests
EN50124-1	General service conditions and general rules for electric equipment for rolling stock
IEC60310	Traction transformers and inductors on board rolling stock
IEC 60076	Power transformers
IEC1376	Creepage and clearance
IEC77	Rules for electric traction equipment
ISO 129/1985	Technical drawings – dimensioning (BS308)

3. Climatic & Environmental Condition:

3.1	Temperature	Max. temperature: Locomotive standing under sun 75 °C, Working loco 65ºC Minimum temperature: 0°C Average temperature: 47°C
3.2	Humidity	Upto 100% during rainy season
3.3	Altitude	Upto 1200 m above mean Sea level
3.4	Rainfall	Very heavy in certain areas
3.5	Atmosphere during hot weather	Extremely dusty and desert terrain in certain areas. The dust concentration in air may reach a high value of 1.6mg/cubic meter

3.6	Coastal area	The equipment shall be designed to work in coastal area in humidity and salt laden and corrosive atmosphere. The maximum values of the condition shall be as follows: Maximum pH value: 8.5 Sulphate: 7 mg per litre Max. Concentration of chlorine: 6 mg per litre Maximum conductivity: 130 micro Siemens/cm
3.7	Electromagnetic pollution	High degree of electromagnetic pollution is anticipated in locomotive machine room, where the equipment shall be mounted. Necessary precaution shall be taken in this regard.

Detailed specification:

4. Electrical requirement

4.1	Inductance	:	250µH (min) - 290µH (max) @ 10kHz
4.2	DC link Voltage	:	175V DC (nominal) … 202V DC (max.)
4.3	Output Voltage	:	110V DC
4.4	Current	:	91A (nominal)
4.5	I ripple	:	20A (p-p)
4.6	Switching Frequency	:	10kHz
4.7	DC resistance @20°C	:	2.7 mΩ (reference)

5. Insulation requirement.

5.1	Insulation voltage (Between winding and core)	:	3000Vrms (Test voltage 50Hz/10sec)
5.2	Insulation temperature class	:	B (130 deg. C)
5.3	Pollution degree	:	PD2

6. Thermal requirements.

6.1	Operating Temperature	:	- 25 ° C to +70 ° C
6.2	Cooling	:	Natural cooling

7. Mechanical requirements.

7.1	Weight	:	10 kg approx.

COPY RIGHT AND CONFIDENTIAL
The information on this document is the property of Bharat Heavy Electricals Limited.
It must not be used directly or indirectly in anyway detrimental to the interest of the company.

File No. EDN-SA0SAMP(PFE)/113/2025-EDN-SA/MM/PUR (Computer No. 147556)
Generated from eOffice by Venkata Mahesh Maruputi, MANAGER(VMM)-SA/MM/PUR-EDN, MANAGER, BHARAT HEAVY ELECTRICAL LTD on 13/03/2025 11:05 am

COPY RIGHT AND CONFIDENTIAL
The information on this document is the property of Bharat Heavy Electricals Limited.
It must not be used directly or indirectly in anyway detrimental to the interest of the company.

7.2 Mechanical dimensions (all dimensions are in mm)

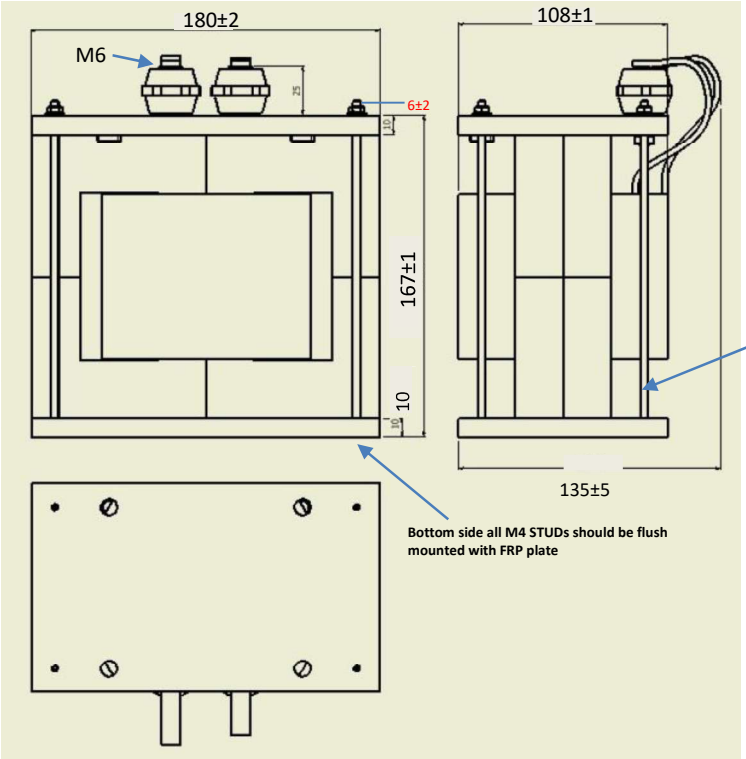

Circuit Diagram

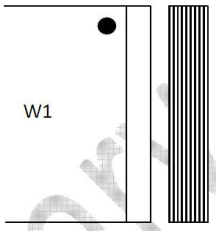

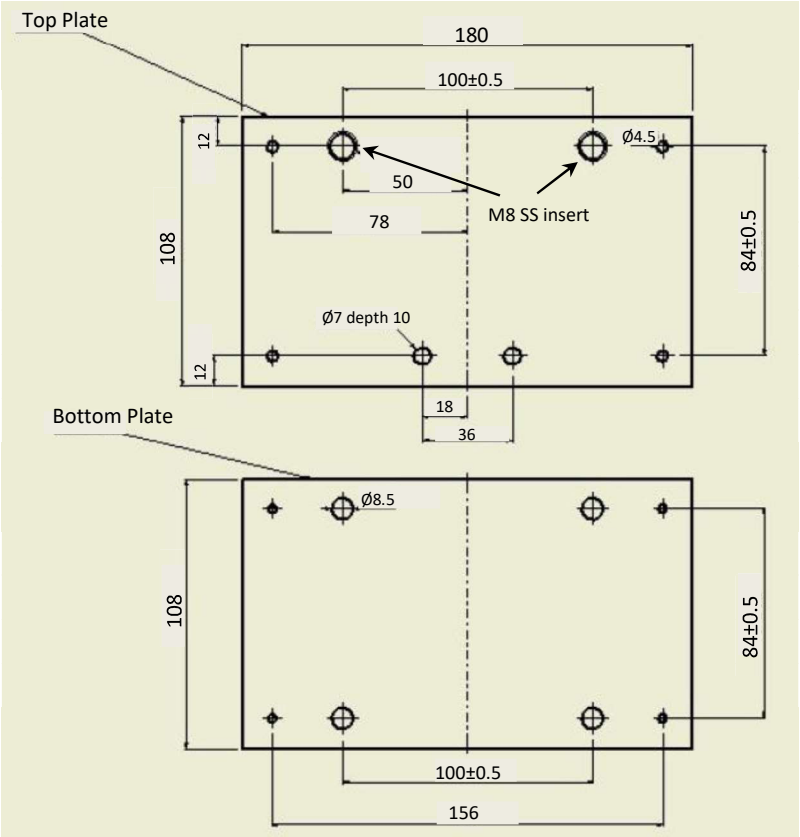

COPY RIGHT AND CONFIDENTIAL
The information on this document is the property of Bharat Heavy Electricals Limited.
It must not be used directly or indirectly in anyway detrimental to the interest of the company.

8. Details of Components .

8.1	Core	:	Iron Powder U350-40, Micrometals
8.2	Conductor	:	10x2mm enameled Copper wire, two in parallel (40sqmm) Insulation: Class H (180 deg. C)
8.3	Bobbin	:	Material: Glass filled Nylon (For reference)
8.4	Insulator	:	DMC/epoxy molded (Reference: MV322D, MICAVER)
8.5	Top & bottom plates	:	Glass Polyester GPO-3 / Glass Epoxy (Colour: Post office RED)

9. Reliability & safety:

9.1	Life time	: 30 years
9.2	Maintenance	: Maintenance free
9.3	Operating hours	: 8640 per year
9.4	Power stress level	: 100%
9.5	FIT	: 100 Failures/10^9 operating hours
9.6	Safety	: Fire / smoke and insulation safety as per standards

10. Tests to be conducted

Test protocol: Supplier shall submit test protocol for Routine & type tests along with techno commercial offer.

10.1 Routine tests

Routine tests shall be carried out by the manufacturer on every inductor before delivery and routine test certificate shall be submitted.

10.2 Type tests

Supplier to perform type tests for the first time on minimum one Inductor as per relevant IEC standards. The type tested inductor should not be supplied.

S.No	Test	Type / Routine test
1	Visual checks	Type/Routine
2	Measurement of winding resistance	Type/Routine
3	Measurement of losses	Type
4	Measurement of inductance	Type/Routine
5	Temperature rise	Type
6	Insulation voltage / Insulation resistance test	Type/Routine
7	Voltage between terminals withstand	Type/Routine
8	Separate source voltage withstand	Type/Routine
9	Shock and vibration withstand	Type

File No. EDN-SA0SAMP(PFE)/113/2025-EDN-SA/MM/PUR (Computer No. 147556)
Generated from eOffice by Venkata Mahesh Maruputi, MANAGER(VMM)-SA/MM/PUR-EDN, MANAGER, BHARAT HEAVY ELECTRICAL LTD on 13/03/2025 11:05 am

COPY RIGHT AND CONFIDENTIAL
The information on this document is the property of Bharat Heavy Electricals Limited.
It must not be used directly or indirectly in anyway detrimental to the interest of the company.

11. RATING PLATE DETAILS:

Weather proof Rating plate (with following information) shall be fixed at a suitable position.

1. BHEL specification No.
2. Inductance Value
3. Rated current
4. Manufacturer name & Part number
5. Serial number & year of manufacture
6. Insulation class

12. DOCUMENTATION

12.1 Information required along with techno commercial offer without which offer is liable for rejection.

12.1.1 Supplier shall furnish clause wise confirmation/comments to the technical specification. Deviation, if any, shall be clearly brought out indicating the clause number, original specification, deviation sought with proper technical backup (catalogue, technical brochure, international standards, calculations etc. If no deviations required, then supplier shall furnish certificate indicating "NO DEVIATIONS REQUESTED" and we comply fully with all the technical requirements of this specification.

12.1.2 Dimensional drawing confirming to clause no. 7 of this specification.

12.2 Information required after receipt of the PO

12.2.1 Dimensional drawing for approval of BHEL along with terminal details etc.

12.2.2 Supplier to submit the successful type tested report. Supplier to start manufacturing of RFQ quantity after receipt of manufacturing clearance from BHEL based on successful type tested report.

12.3 Information required along with material supply

12.3.1 Type tested reports (for first inductor) for the tests as per clause 10.

12.3.2 Routine Test certificates for the tests as per clause 10 on all inductors.

13. Packing: Equipment shall be packed in a manner suitable for delivery and storage at the appointed delivery address. Transport packaging will provide adequate protection against accidental damage during normal handling. Terminals, leads, mounting brackets etc. will be protected from mechanical damage.

14. Acceptance criteria:

Dimensions as per approved drawing

Routine test certificate & Type test report

--END--

File No. EDN-SA0SAMP(PFE)/113/2025-EDN-SA/MM/PUR (Computer No. 147556)
Generated from eOffice by Venkata Mahesh Maruputi, MANAGER(VMM)-SA/MM/PUR-EDN, MANAGER, BHARAT HEAVY ELECTRICAL LTD on 13/03/2025 11:05 am