ANNEXURE-TQR

TECHNICAL PRE- QUALIFICATION REQUIREMENT

Name of customer: PATRATU VIDUT UTPADAN NIGAM LTD. (PVUNL)

Name of consultant: NTPC LTD.

Name of Project: PATRATU SUPER THERMAL POWER PROJECTS EXPANSION PHASE-I (3X800MW) - 400 KV GIS

Name of Item : AIR CONDITIONING SYSTEM

PI No: 01I2100367 **PI Date:** 23.03.2021

PQR Sr. No	PQR Description	Supporting Document to be attached
1.	The bidder should have designed, supplied, erected and commissioned atleast One (1) number of Air Conditioning system having a total installed capacity of 300TR or more, which should have included atleast one chilling unit with a minimum capacity of 60TR. The systems should have been in #successful operation for atleast one (1) year prior to 07-09-18. In addition, the chiller unit(s) proposed to be supplied for this package shall be sourced from the manufacturer(s) who have manufactured and supplied atleast one (1) no. of similar type of chiller units each having a capacity of not less than 150 TR, which should have been in #successful operation for atleast one (1) year prior to 07-09-18. (#) Successful operation means certificate issued by the end user certifying the operation.	a) Copy of Purchase Orders b) Break up of Air Conditioning systems supplied. c) Performance Certificate/Letter/MOM from end user indicating satisfactory operation for at least one (1) year prior to 07-09-18. d) Filled signed and stamped copy of Attachment 3K.

Prepared By:	Checked By:	Approved By:
Ayushi Jindal (Sr. Engineer-TBEM) Ayushi 23/3/21	Asif Rizvi (Manager-TBEM) 23/3/21	S K Shukla (Sr. DGM-TBEM) 23/03/21.

भारत हैवी ईलैक्ट्रिकल्स लिमिटेड

BHARAT HEAVY ELECTRICALS LIMITED

पारेषण व्यापार अभियांत्रिकी प्रबंधन

TRANSMISSION BUSINESS ENGINEERING MANAGEMENT

प्रलेख संख्या/ DOC. No	9585-001-572-PVM-U-004-01	Rev. No.	0		बनाया/ Prepared	जांचा/ Checked	स्वीकृती/ Approved
TYPE/ प्रकार OF DOC.	TECHNICAL SPECIFICATION			हस्ता. / SIGN			
TITLE/ शीर्षक	Technical specification for Air Conditioning *(400KV-Gas Insulated Switchyard Area)*			नाम / NAME	AJ	AR	SKS
				दिनांक/ DATE	23-03-21	23-03-21	23-03-21
				समूह/GROUP	TBEM	W.O. No	87009

ग्राहक/ CUSTOMER	PATRATU VIDUT UTPADAN NIGAM LTD. (PVUNL)
परामर्शदाता/ CONSULTANT	NATIONAL THERMAL POWER CORPORATION LTD (NTPC LTD.)
परियोजना/ PROJECT	3X800 MW PATRATU SUPER THERMAL POWER PROJECTS EXPANSION PHASE-I (3X800MW) - 400 KV GIS

विषय-सूचि/ CONTENTS

अनुभाग / Section	विवरण / Description	पृष्ट संख्या/ No of Pages
1	Intent, System Description, Design Criteria and Scope	22
2	Equipment Specification	103
3	Project details and general specifications	09
4	List of Documents	01
5	Schedule to be filled by Bidder	21

ENCLOSURES

a. ANNEXURES TO SECTION – 2

Customer specifications

b. ANNEXURES TO SECTION -5

Tender drawings

List of NTPC makes

Rev No.	Date	Altered	Checked	Approved	REVISION DETAILS

Distribution				
To	TBEM	TBMM	TBQM	Vendor
Copies	1	1	1	1

COPYRIGHT AND CONFIDENTIALITY

The information on this document is the property of BHARAT HEAVY ELECTRICALS LTD.

It must not be used directly or indirectly in anyway detrimental to the interest of the company

SECTION -1

INTENT, SYSTEM DESCRIPTION, DESIGN CRITERIA AND SCOPE

1.0 INTENT OF SPECIFICATION

1.1 This specification covers the design, manufacture, inspection and testing at bidder's and/ or his sub vendor's work(s), proper packing, transportation & delivery, storage and handling at site, erection, testing and commissioning, final painting and carrying out acceptance tests at site of **Air-Conditioning System** as detailed in this section and in various other sections of this specification for different rooms located inside the 400KV Gas Insulated switchyard (GIS) Control Building of **PATRATU SUPER THERMAL POWER PROJECTS EXPANSION PHASE-I (3X800MW) - 400 KV GIS**.

1.2 The requirement(s) specified under 'SECTION 2, SECTION 3, SECTION 4' and 'SECTION 5' of this specification shall be considered as part of this section. In case of variance between sections, the requirement of Section-1 shall prevail ***(except those points where specifically mentioned to follow customer specification strictly).*** Customer specification in annexure to section-2 shall be adhered to by the bidder.

1.3 It is not the intent to specify herein all the details of design and manufacture. However, the equipment shall conform in all respects to high standards of design, engineering and workmanship and shall be capable of performing the required duties in a manner acceptable to Purchaser/ Owner, who will interpret the meaning of drawings and specifications and shall be entitled to reject any work or material, which in his judgment is not in full accordance herewith.

1.4 The bidder shall be deemed to have understood completely all the tender drawings and documents and quoted accordingly.

1.5 The bidder has to note carefully the parameters, estimated capacities of equipment indicated and the tender drawing in the specification are only for guidance of the bidder. The system shall be designed as per relevant standards / codes and exact capacities and quantities are to be estimated by the bidder. All such estimations and design calculations shall be submitted for Purchaser's approval.

1.6 *Deviation:* In case of any deviation, the bidder shall indicate separately the deviations clause-wise with respect to the specification in the 'Schedule of Deviation' given in schedule 2 of section-5. Deviations in any other form including clarifications / assumptions / etc. will not be considered and it will be construed that the bid conforms strictly to the specification.

1.7 The Contract shall be on Unit Rate basis for the quantities furnished by BHEL. The quantities furnished in Price bid (BOQ) are as per preliminary design only. BHEL reserves the right for

quantity variation (upward/ downward) due to any reason upto ±30% of total contract value at same unit rate and terms & conditions during execution of contract.

1.8 The Purchaser, Consultant and Customer in this specification stand for BHEL, NTPC and PVUNL respectively. The successful bidder shall be referred to as Contractor.

2.0 AIR CONDITIONING SYSTEM

This system shall be designed with the objective of providing Air Conditioning in different rooms located inside the 400KV Gas Insulated switchyard (GIS) Control Building of **3X800MW PATRATU SUPER THERMAL POWER PROJECTS EXPANSION PHASE-I -400 KV GIS.**

CODES AND STANDARDS

The design, manufacture, inspection and testing of Air Conditioning system shall comply with all currently applicable statutes, regulations and safety codes in the locality where the equipment is to be installed. The equipment shall also conform to the latest applicable Indian/ British/American standards.

The equipment shall conform to the latest edition to the following standards:

IS: 659 - Safety Code for Air-Conditioning
IS: 655 - Specification of metal Air-Ducts
IS: 4999 (Part-51) - Noise Level
IS: 3588 - Specifications of Electrical Axial Flow Fans
BS: 6540 Part I - Air Filters used in Air-Conditioning & General Ventilation
IS: 4671 - Expanded polystyrene for Thermal Insulation purpose
IS: 8183 - Bonded Mineral wool

2.1 SCOPE & DESIGN CRITERIA FOR AIR CONDITIONING SYSTEM

As per technical specification Air conditiong system for various areas of 400KV GIS Switcyard control building shall be provided as below:

Sl. no.	Name of the Area	Dimensions of area (Sq. m)	AC Equipment
1.	GIS Relay/PLCC panel Room including SAS room area at First Floor	19.73 m X 12.73 m	Air cooled condensing units (D-X type) mainly comprising scroll / screw compressor, drive unit, condenser, interconnected refrigerant piping, controls, instruments, base frame, etc. **Air cooled condensing unit (D-X type)**
2.	Battery Charger Room at First Floor	7.0 m X 7.7 m	

3.	Conference Room at First Floor	5.27 m X 6.0 m	**Air conditioners: 2X100% (capacity) & AHU (with VVVFD): 2X100%. (capacity) Unit with ducting arrangement and accessories.**
4.	Office at First Floor	5.04 m X 6.0 m	
5.	Lab Room at First Floor	16.27 m X 7.81 m & 12.5 m X 5.68 m	
6.	AC Plant/AC Unit Room at Ground Floor	7.0 m X 6.0 m	
7.	Office at Ground Floor	3 m X 3.77 m	

Design Criteria for above areas covered with D-X type Air cooled AC units:

Ambient Conditions	**DB in ºC**	**WB in ºC**
Summer	41	25
Monsoon	32.5	27
Winter	9	7.1
Desired Inside Condition	24^0C±1^0C 50%±5% RH	
False Ceiling	All Air conditioned areas shall have false ceiling (under BHEL scope)	
Under Deck Insulation in all air conditioned area	50mm nominal thickness of glass wool 32kg per cum. or rock wool 48 kg per cum. (under BHEL scope)	
Floor Area	As per Gas Insulated switchyard control building layout	
Exposed glass area	As per Gas Insulated switchyard control building layout	
Exposed wall area	As per Gas Insulated switchyard control building layout	
Illumination Heat load	2 Watt per sq. ft. or actual whichever is higher.	
Occupancy	***The occupancy for general/ office area shall be minimum one person per 10 Sq.M and for conference room the same shall be one per 3.0 Sq.M. In the control rooms/control equipment room, the occupancy may be one person per 25 Sq.M (Minimum) or actual seating arrangement whichever is higher***	
Fresh Air Quantity	The fresh air quantity for air-conditioned areas of Switchyard shall be 0.45 M3/minutes/person or 1.0 air change per hour whichever is greater. Fresh air fan capacity shall be minimum 10% of the total CMH value of working indoor units.	

Return Air	In Air conditioning system the return air shall be through ducts and use of plenum space for return air shall be avoided
Motorized Fire Dampers	The supply and return air ducts shall be provided with automatic (motorised) fire dampers (of 90 minutes fire rating) at locations where ducts pass through walls & floors. Operation of these dampers shall be interlocked with the fire alarm system and shall also be possible to operate manually from the remote control panel. Required electrical contacts shall be provided in control panel of A/C plant by the Contractor for further wiring upto fire alarm panels.
Refrigerant	Refrigerant should be CFC/HCFC free. The refrigerant shall be R-134a/ R-410A/R-407C or any other environment friendly refrigerant.
Insulation	Supply and return ducts shall be insulated. All types of Insulation used for HVAC application shall be CFC/HCFC free.

Equipment loads to be considered for calculating heat load of different areas under air conditioning and ventilation system as envisaged in this technical specification shall be as follows:

Sl. No	Areas	Equipment heat dissipation Load (kW)
1.	GIS Relay/PLCC panel Room including SAS room area at First Floor	5 kW
2.	Battery Charger Room at First Floor	8 W
3.	Conference Room at First Floor	0.5 kW
4.	Office at First Floor and Ground Floor	0.5 kW
5.	Lab Room at First Floor	1 kW

- Peak heat load shall be calculated cconsidering following safety margins:
  - **i. Safety factor has been considered under Room Sensible heat (RSH) – 10%**
  - **ii. Safety factor has been considered under Room Latent heat (RLH) – 10%**
- **A design margin of 10% over and above the peak heat load (Final TR) & supply air quantity as per heat load calculation) shall be considered while designing the AC plant capacity for the areas tabulated above**.
- **Notes (strictly to be followed by contractor):**

  After finalization of plant capacity during detailed engineering, contractor shall ensure it's placement in the space specified as **AC Plant room/AC Unit Room of CRB**. The final configuration (quantity and capacity of each unit to meet final capacity as per calculation and space availability) of plant shall be decided during detailed engineering to accommodate the plant and it's ducting arrangement etc.

2.2 TYPE OF AIR CONDITIONING SYSTEM

Air Cooled D-X type Air Conditioner Unit

(Applicable for GIS Relay/PLCC panel Room including SAS room area, Battery Charger Room, Conference Room, Office Room & Lab Room at first floor, AC Plant/AC Unit Room and Office at Ground Floor of 400KV Gas insulated switchyard control building. Refer drawing: Arch drawings-ground & first floor plan control room building-TB-0-378-607-620-1)

a. Air-conditioning shall be provided on continuous basis to maintain the specified inside conditions. The system shall comprise of Air-cooled D-X type ducted AC units on 2x100% basis.

b. 2 Sets (100% working+100% standby capacities)* AHU with VVVF control *& 2 Sets (100% working+100% standby capacities) D-X type air cooled condensing unit shall be provided to cater the AC requirement of above mentioned areas in GIS control Room building. However, location of the outdoor unit shall be finalised during detailed engineering stage and accordingly drawing shall be submitted to customer separately for approval.

c. **The Indoor unit (AHU's including VFD panel and it's PDB/MCC panel) shall be kept in separate dedicated room (AC Plant/AC Unit Room) on the ground floor of switchyard control building whereas D-X type condensing unit comprising of compressor, condenser coil & condenser fan shall be provided outside. Indoor unit and outdoor unit shall be connected with pipe of adequate size (both suction and liquid line)**.

d. There shall be a proper arrangement/provisions for supply and accommodation of NRD/URD in the supply air circuit near AHU duct to avoid any cross/reverse flow of air and inturn AHU fan of standby unit. The purpose of providing these dampers is to isolate standby unit when working unit is under operation.

e. Refrigerant should be CFC/HCFC free. The refrigerant shall be R-134a/ R-410A/R-407C or any other environment friendly for the AC plant unit.

f. **Outlet of all the AHU's shall be collected in a common supply plenum chamber through flexible canvass connection. The conditioned air is then distributed to various AC areas mentioned above through supply air duct along with diffuser running above false ceiling. The return air from all these areas shall be collected through return air ducts running in the space above false ceiling and shall brought back to AHU/AC Unit room at ground floor of switchyard building where it will be mixed with a fixed amount of fresh air before being circulated again**.

Capacity of the D-X type AC units will be inline with heat load estimates and technical specification and it shall be on 2X100% (100% working+100% standby capacities) basis as defined above.

This complete AC plant for air-conditioned areas as mentioned shall operate continuous (24 hours a day, 7 days a week except during loss of normal power failure).

✓ **Notes:**

1. Heat Load calculation for each area mentioned above will be submitted for customer/ consultant approval during detailed engineering stage.
2. For AC plant (**D-X type condensing and AHU with VVVF control**), all monitoring and control shall be suitably done automatic through their microprocessor based control panel based on the load requirement and necessary feedbacks from their instruments and other sensing devices installed within the plant.
3. For controls and interlocks provisions in D-X type plant, please follow customer specification strictly attached to section-2 ***(Please refer clause 7.05.00, sub section-A-17, Air conditioning system, Page 24 of 31).***

2.3 SYSTEM DESCRIPTION

a. **(2x100%) air cooled DX type condensing AC unit complete with all accessories as described here in after.**

b. **(2x100%) Air Handling Unit (AHU's) with VVVF control complete with all accessories as described here in after.**

c. **One VFD panel in the AHU room/AC Plant room.**

d. **One Lot-Refrigerant Pipe-MS Heavy Class (Liquid and suction line of adequate size)**

e. **One Lot-Condensate Drain water piping out of MS pipes confirming to IS:1239, Part-I, heavy grade and galvanized as per IS:4736, from various equipments upto nearest drain point.**

f. **Fire Dampers-The supply and return air ducts shall be provided with motor operated fire damper at locations where duct passes through walls & floors for ease of isolation, maintenance and as well as for emergency operation. The operation of these automatic dampers shall be interlocked the fire alarm system.**

g. **One Lot-GSS ducting (class 275) of zinc coating sheet metal work air duct and acoustic insulation for initial length of 5m from the AHU outlet.**

h. **Temp. & humidity sensor with indicator/display shall be provided in AHU Room, Relay/PLCC & SAS room only for monitoring purpose. Details of sensor shall be as per below:**

HUMIDITY SENSOR
Sensor: Capacitance type
Accuracy: +/-3% R.H
Range: 0-100% R.H
Output: 4-20 ma
Time constant: 2 mins.

Output from the sensor is to be connected to respective control system. Contractor can also provide combined instrument for measurement of humidity and temperature subject to Employer's approval

during detailed engineering. In all such cases, 4-20 ma outputs, each for temperature and humidity measurements are to be provided.

TEMPERATURE/ HUMIDITY INDICATOR

Sensor: RTD for (Pt 100) for temperature: Capacitance Type for Humidity (specs for humidity and temperature shall be as mentioned above)

Display: Combined enclosure with two three digit seven segments LED display with decimal point after two digits. LED height shall be 4 inches, clearly legible from a distance of at least 10 meters.

Range: 0-60 Deg. C for temperature.
: 0-95.0 % for Relative Humidity.

Accuracy: Better than +/_0.5 % for Temperature
: Better than +/_2.5 % for Relative Humidity

Mounting: Table Top/ wall mounting.

Power supply: 240 V AC, 50 Hz.

Output: 4-20 mA signal each for temperature.

i. **1x100% duty fresh air fan with pre filter & fine filter in AHU room shall be provided.**

j. The supply all Carbon steel sheets under air conditioning system shall be hot dip galvanized or spray galvanized unless otherwise specified and minimum zinc deposition shall conform to Class 275 of IS: 277.**The air distribution system shall be sized to have a constant frictional drop.**

k. **Duct sizing and fabrication shall comply with requirements of IS 655/ /ASHRAE/SMACNA. Duct sizing shall be done in a way to ensure air velocity in the main duct & branch ducts shall be restricted to 7.5 m/sec and 6 m/sec (max.) and 2m/s for the diffusers/grill.**

l. **For calculating friction loss in piping system: WILLIAM & HAZEN formula shall be used with C value as 100.**

m. **Thermal insulation -** Supply air duct and part of the return air duct passing through non conditioned space, if any, with at least 13 mm thick aluminium foil faced Nitrile Rubber thermal insulation.

n. **Acoustic insulation -** Upto a length of 6 mtrs from outlet of the PAC units, supply air duct shall be acoustically insulated with 25 mm thick fiber glass crown 150 (density of 48 kg/cu.m) and shall be covered with 26G aluminium perforated sheet. Perforation area shall be 30% of free area.

o. Common strip heater of adequate capacity shall be provided in the plenum for winter heating.

p. Pan type humidifier of adequate capacity shall be connected through a duct piece to the common plenum.

q. Motorized fire damper shall be provided in supply air duct in order to block supply air to conditioned space and vice versa in case of fire.

r. The fresh air unit shall consist of:

 Wall cowl with bird screen, tube axial fan with motor.

- Pre-filter made up of HDPE and efficiency 90% down to 10 microns and maximum face velocity of 1.75 m/sec.
- Fine filter made up of HDPE and efficiency 99.5% down to 5 microns and maximum face velocity 1.25 m/sec.
- Volume control damper, ducting, fixing frame and necessary supports.
- Filter frame shall be of aluminium and shall be flanged.

2.4 EQUIPMENT SPECIFICATION

A. Condensing Unit -Air-Cooled (D-X type)

Condensing unit	
Type	Air cooled scroll type
Vibration isolators	Steel spring / Neoprene rubber cushy foot type with isolation efficiency not less than 85%
Compressor	
Type	The Compressor shall be scroll, serviceable, either hermetic type or semi-hermetic type with automatic capacity control (minimum 3 steps)
Type of drive	Motor driven
Refrigerant	The refrigerant shall be R-134a/ R-410A/R-407C or any other environment friendly refrigerant
Accessories	High/Low pressure cut-outs, oil pressure switches, relief valves, pressure gauges at each stage, lube oil and control oil pressure gauges, suction & discharge stop valves, Muffler, Crank case heaters, oil filters, magnetic oil separators, temperature indicators for lube oil/heaters, oil level indicators, safety thermostat for crank case heater, vibration isolators, etc.
Capacity	Minimum capacity shall be suitable for the identified/selected at evaporating temperature and condensing temperature and shall be indicated

B. Air Handling Unit (AHU)

Each AHU shall consist of casing, fan impeller section, cooling coil section, damper section, steel frame with anti-vibration mountings (AVMs) having minimum 85% vibration dampening efficiency and flame retardant, water proof neoprene impregnated flexible connection on fan discharge. Isolation dampers at the suction and discharge of each AHU shall be provided, in case return air duct is directly connected to AHU. However, in case AHU room is used for return air, isolation dampers are required to be provided only at AHU discharge of each AHU. Pre-filter at the suction and fine (micro-vee type) at the discharge of each individual AHU, and heater section in the common discharge of AHUs. NRD shall be provided at outlet of each AHU when multiple AHU used for a common plenum.

The casing of AHUs shall be of double skin construction. Double skin sandwich panels (inside and outside) shall be fabricated using minimum 0.63 mm (24g) galvanized steel sheet (thickness of galvanization as per manufacturer's standard), with 25mm thick polyurethane foam insulation of minimum 38 Kg/Cum density in between. Suitable reinforcements shall be provided to give structural strength to prevent any deformation/buckling.

Sloping condensate drain pan shall be made of minimum 1.2 mm thick Stainless Sheet Steel. It shall be isolated from bottom floor panel through 25mm thick heavy duty treated for Fire (TF) quality expanded polystyrene or polyurethane foam. Drain pan shall extend beyond the coil.

Cooling coil (min. 4 row deep) shall be made of seamless copper tubes with aluminium fins firmly bonded to copper tubes and shall be provided with suitable drains and vents connections.

All filter plenum shall be provided with a walking platform inside the plenum chamber for filter cleaning purpose. Inspection door shall be provided at the plenum chamber and a removable type ladder shall be attached to plenum.

B.1 Centrifugal fan for AHU

Fan Type	Double Width Double Inlet (DWDI) Centrifugal Type
Fan impeller	Backward curved blades
Casing material	GI /Mild steel with minimum thickness of 3 mm.
Impeller material	Carbon steel
Shaft	EN 8 Steel
Fan bearings	Self-aligning type, permanently lubricated, heavy duty with a design life of 10,000 operating hours.
Critical speed	First critical speed of rotating assembly shall be at least 25% above the operating speed.
Drive	Motor driven with removable belt guard. Motor rating (at 50 deg. C ambient) shall be atleast fifteen percent (15%) above the maximum load demand of drives at the design duty point.
Fans	**For AHUs of capacity 50,000 CMH and above, Bidder may offer two (2) Nos. centrifugal fans of equal capacity for each AHU provided all such AHUs are accommodated within the space identified by the Employer.**

C. Mixing Box:

Mixing box shall be complete with fresh and return air dampers. Mixing box shall be provided whenever the return air is ducted back to the AHU.

D. Pan Humidifier:

Pan humidifier shall be made of 22 gauge SS 304 tank, duly insulated with 25 mm thick resin bonded fibre glass insulation (min. 24 Kg/m3 density) with 0.5 mm GSS cladding. The humidifier shall be complete with stainless steel immersion heaters, safety thermostat, float valve with stainless steel ball, sight glass,

overflow and drain connections, steam outlet nozzle and float switch. Step controller shall be provided for switching on / off heater banks as per system requirement.

E. Bidder should strictly follow the customer specification of switchgear board attached to Section-2 of this specification.

3.0 Power SUPPLY REQUIREMENT

a. One (1) no. MCC cum Power distribution board (PDB) in AC Plant room at ground floor of switchyard control building shall be provided. This PDB shall extend power supplies to AHU units/DX type condensing unit & its associated equipments including heaters, pan humidifier, dampers etc. BHEL shall provide two incomers each of rating 400A from main ACDB board to feed this MCC cum PDB. Contractor shall provide necessary arrangements accordingly. Two nos. incomers of 400A rating (through MCCB) of cable size 3.5CX300 sqmm. (Al/XLPE) shall be provided from the main ACDB by BHEL and the same will be terminated in MCC cum PDB. All annunciations related to failure of equipments, tripping of equipments, source of failure/reason due to which the equipment is stopped/tripped, low & high limits of parameters such as level, temp., pressure drop etc. as applicable shall be provided for each fan in the PDB panel. Fully wired, 20% spare annunciation windows and terminal blocks each type & rating (minimum 1 no.) with all necessary wirings shall be provided in the panel for future use. Also 20% spare feeders of each type & rating (minimum 1 no.) with all necessary wirings shall be made available in the panel. All necessary protection & interlocking shall also be provided to avoid simultaneous switching on the two units (working & standby).

b. Bidder should strictly follow the customer specification of switchgear board attached to section-2 of this specification for preparing the scheme etc. of the MCC cum PDB & push button etc. of Air conditioning system covered in this specification. No deviation shall be acceptable with respect to customer's switchgear board specification attached to section-2.

c. Cable entry to the panel (top or bottom) shall be finalized during detailed engineering based on the provision of trench in those particular area or space availability.

4.0 List of Mandatory Spares

AIR CONDITINING SYSTEM		
SL. NO.	**ITEM DESCRIPTION**	**QUANTITY**
A.	**Air handling unit (for each model)**	
1.	V-belts for AHU Blower	2 Sets
2.	AHU Blower bearing	1 SET
3.	Blower motor bearing	1 SET
4.	Filters at suction and discharge of all AHUs	25% of installed population
B.	**Electrical Actuators**	
1.	Actuators	10% or 1 No. of each type, model and rating, whichever is more.

C.	**Control & Instrumentation**	
1.	Relative Humidity Sensors	2 Nos
2.	Local Humidity/Temperature indicators	2 Nos. each
D.	**Process Connection Piping**	
1.	Valves*	10% or 1 No. of each type, class, size and model whichever is more.
2.	2 way, 3way, 5way valve manifolds*	10% or 1 No. of each type, class, size and model whichever is more.
3.	Fittings*	10% or 1 No. of each type, class, size and model whichever is more.

***Note**: Items under mandatory spares D.1, D.2 & D.3 shall be supplied only if applicable under the Air conditioning system for switchyard area and shall be finalized with customer during detailed engineering.*

4.0.1. Maintenance Tools & Tackles

AIR CONDITINING SYSTEM		
SL. NO.	**ITEM DESCRIPTION**	**QUANTITY**
1.	FLAT D WRENCH - 6 MM TO 32 MM	1 Set
2.	BOX WRENCHES - 6 MM TO 22 MM	1 Set
3.	RING SPANNER - 6 MM TO 32 MM	1 Set
4.	ALLEN KEYS - 2 MM TO 10 MM	1 Set
5.	CRESCENT SCREW SPANNER	1 No.
6.	SCREW DRIVER	1 No.
7.	OFFSET SCREW DRIVER	1 No.
8.	INSULATED PLIER	1 No.
9.	TORCH LIGHT FOR 2 CELL	1 No.
10.	HAMMER 1 LB	1 No.
11.	OIL CAN	1 No.
13.	POCKET THERMOMETER - 0 TO 50 DEG. C)	1 No.
14.	INSULATION TAPE ROLL	1 No.
15.	STEEL FOOT RULE - 12"	1 No.
16.	FEELER GAUGE 9 BLADES	1 No.
17.	PIPE WRENCH	1 No.
18.	FLARE NUT (1/4")	6 Nos.
19.	FLARING TOOL	1 No.
20.	TUBE CUTTER	1 No.
21.	GAS CHARGING PIPE	1 No.
22.	NITROGEN CHARGING ADAPTER	1 No.

23.	FREON PRESSURE GAUGE (2 1/2" DIA DIAL)) 0 - 300 MM	1 No.
24.	FREON PRESSURE GAUGE (2 1/2" DIA DIAL)) 30 - 150	1 No.
25.	PSYCHRO METER	1 No.
26.	LOCK WITH KEY FOR TOOL BOX	1 No.
27.	RATCHET 1/4"	1 No.
28.	MS TOOL BOX	1 No.

***Any other tool/tackle required for the system shall also be provided by the vendor without any cost implication.**

References:

- **CONTROL BUILDING LAYOUT FOR OF 400 KV SWITCHYARD (Drg. No. 9585-001-572-PVC-F-0047 R3)**

Notes:

- Air Conditioning system for areas of Gas insulated switchyard control building shall be designed as per different the latest architecture drawings during detailed engineering stage.
- Customer/ consultant approval on all the technical data sheets of equipments /drawings/ documents for this package will be obtained during the detailed engineering stage.

5.0 SCOPE OF SUPPLY & SERVICES

Exact requirements shall be worked out during detailed engineering after award of contract. The scope of the work under the contract shall be deemed to include all such items, which although not specifically mentioned in the bid documents and/or in the bidder's proposal, but are required to make the equipment/system complete for its safe, efficient, reliable and trouble-free operation, unless the same is specifically excluded from the Bidder's scope of work under clause 6.0 of this section.

5.1 Bidder shall also consider the following while quoting for the system:

i) Power & Control cables including instrumentation and FO cable for Air Conditioning System will be supplied on free issue basis to contractor. Contractor shall have to choose their cables from the available sizes only *as listed in Annexure – I to Section-1* and necessary modifications in their equipment for termination of these cables shall be made by contractor.

ii) Since laying & termination of all cables is in contractor's scope, supply of cable accessories such as lugs, glands, cable tags & markers etc. shall be included by the bidders in their offers.

iii) Necessary cable trays will be supplied on free issue basis to the contractor, however necessary hardware for fixing the same on walls or elsewhere shall be included by the bidders in their offers.

iv) Earthing material viz. GS flat & wire will also be supplied on free issue basis to contractor; however, requirement shall be given by the bidders in their respective bids.

v) Bidder shall ensure that sufficient quantities of commissioning spares are made available for timely completion of commissioning of the system. The bidder shall furnish a list of Commissioning spares that will be brought by him. The unused commissioning spares shall be returnable to the bidder.

vi) Conducting performance guarantee tests as per approved procedure to the satisfaction of Owner / Purchaser and handing over an operational system to the owner. Procedure for performance guarantee test shall be submitted by contractor for customer review and approval.

vii) Contractor shall submit valid Type test report for approval by owner. Fresh type test of equipment is not envisaged. It is presumed that equipment offered is duly type tested.

In case the type test reports are found un-satisfactory, tests shall be carried out afresh by contractor without any additional cost implication to BHEL.

viii) Bidder shall provide NTPC approved makes for all HVAC items for this system as per the NTPC makelist provided in Annexure –1A to section-5 of this specification. All such makes shall be subjected to acceptance of NTPC during detailed engineering stage. No additional price implication shall be made to BHEL on account of non-acceptance of proposed makes by NTPC.

5.2 Scope of services

A. Erection, Testing & Commissioning (ETC) requirements

i) The scope of ETC shall include receipt of material at site, unloading, safe storage of material, handling of equipment/ material at site, erection of equipment /material at site including fabrication, equipment and system testing, commissioning of the entire system, conducting performance guarantee tests to the satisfaction of Owner / Purchaser and final handing over to the owner of the entire system.

ii) Furnishing technical calculations in support of equipment selection or sizing as and when required.

B. Electrical System

i) Preparations of cable interconnection diagram for equipment supplied under this contract and accordingly offer guidance to the purchaser for laying necessary cables. Termination details shall also be furnished in the said interconnection table.

ii) Cables laying for incomers to the MCC cum PDB panel shall be done by the purchaser while termination of the same to the PDB panel end supplied under this contract is in bidder's scope of works. The contractor has to lay and terminate all the other power and control cables supplied under the present scope.

iii) Laying & Termination of Power/ Control cables/FO Cables for the equipment under the scope of this specification. Bidders shall include all cable accessories like lugs, glands, cable tags, markers etc in their respective bids. All cable laying and termination shall be done as per NTPC standard.

iv) Earthing of all installations (to the nearest earth mat/ earthing pad) supplied under the scope of this specification.

C. All machinery tools & tackles and consumables required for erection/testing / commissioning of the system shall be arranged by the Bidder.

D. Piping from water tap-off to inlet of pan humidifier. Water tap-off shall be provided by the purchaser at one point inside the AHU room.

E. One water tap shall be provided nearby AC outdoor unit for make-up water arrangement. Contractor shall further extend this pipe for their use.

F. Piping from overflow of pan humidifier & packaged unit (disposal of condensate) to the nearest drain point.

G. Minor modifications, alterations in system installation as per customer's specific requirements shall be done without any extra cost to purchaser.

H. Painting of all the equipments shall be as per customer specification. Final touch up/proper painting shall be done at site (if painting on the equipment get damage during ETC) in case of any remark given by customer.

I. After completion of erection and commissioning of the system, the bidder shall train site engineers of Purchaser/Owner so that they are fully conversant with both electrical and mechanical part of this package.

J. Bidders to ensure that sufficient quantity of spares are made available for timely completion of commissioning of the system. The bidder shall furnish a list of commissioning spares that will be brought by him. The unused commissioning spares shall be returnable to the bidder.

K. **Obtaining approval on documents & installations.**

i) Obtaining, "As Built" certification from purchaser or owner on applicable drawings. Completing documentation as per specification requirement.

ii) Obtaining customer's written acceptance of satisfactory completion of job. (Acceptance of PG + handing over of system and mandatory spares (if any)).

iii) Any other service not explicitly illustrated herein but which may be required to complete the system with its desired functionality or in the spirit of contract shall also deemed to be under the scope of bidder.

L. Civil Works

Major civil works such as room & foundations for various Air Conditioning System equipments shall be in purchaser's scope. However, following shall be in contractor scope of services:

a. Wall openings at suitable locations for duct, refrigerant/drain piping, Fresh Air unit shall be made by the contractor. Associated civil works such as grouting, filling up crevices/cut outs etc during installations of equipments shall also be in contractor's scope. Any other damage caused to civil works during ETC work of the equipment/system shall be made good to the original finish by the contractor at

no extra cost to the purchaser. All wall opening shall be sealed completed after erection of equipments/facilities.

b. <u>All erection material including supporting structure for ducts or any other associated air conditioning equipments for proper strengthen and stability shall be supplied by contractor.</u>

c. All duct supporting structures shall be of good quality and it's specification should be strictly inline with customer specification attached to section-2. Bidder may kindly note this point while quoting. No deviation shall be acceptable with respect to structural support steel material and it's painting details provided in the customer specification.

d. Furnishing of details for construction of outdoor unit's mounting arrangement.

e. Providing necessary guidance to / coordination with civil contractor so that appropriate sized / correctly located cut outs are made (by civil contractor) in false ceiling for installation of grilles / diffusers / return air.
However, in case wall openings / cut outs have not been provided for either duct laying or fresh air fan, the same shall have to be made by the Contractor.

Minor modifications, alterations in system installation as per customer's specific requirements shall be done without any extra cost to purchaser. The Bidder shall however supply foundation bolts & hardware and undertake minor civil works such as grouting, filling up of crevices/ cut outs etc. Any damage caused to civil works during ETC work of the equipment/system shall have to be made good to the original finish by the Contractor at no extra cost to the Purchaser.

6.0 Exclusions

a) **Supply of power & control cables including instrumentation or Fiber Optical cable (if applicable) are excluded. However, laying and termination of these cables shall be in contractor's scope.** The bidder shall furnish quantity and type of cables required complete system in their respective bids. Laying & termination is in contractor scope.

b) **Supply of necessary cable trays for laying cables, however hardware for fixing the same on wall trenches or elsewhere shall be included by the bidder in his bid.**

c) **Supply of GI flat for earthing of equipments.**

d) Supply & installation of false ceiling and openings in false ceiling for diffusers as required.

e) Underdeck insulation of the air-conditioned areas.

f) **Major civil works such as room & foundations for various Air-Conditioning system equipments.**

7.0 Utilities Available

Construction water and electricity shall be available at one point each. Contractor shall be required to make own arrangement for taking supplies from there.

8.0 Engineering Drawings/ Documents

Engineering shall start immediately after the award of the contract.

Submission & approval of all drg. / data sheet – as per tender requirement.

9.0 OPERATION & MAINTENANCE (O&M) MANUAL

Operation and Maintenance manuals shall be specifically compiled for the project by the bidders. The draft O&M manual shall be submitted along with the supply of the items. The O&M manual shall contain the following information:

a. Description of the system and equipment with design particulars.
b. Instruction for erection.
c. Instruction for operation, maintenance and repair.
d. Recommended inspection practices and inspection schedule.
e. Ordering information for all replaceable parts.
f. Recommendation for type of lubricants and frequency of lubrication.

10.0 Handing & Taking Over

It is the responsibility of the contractor to maintain the Air conditioning system for switchyard till PG test conducted successfully and it is handed over to customer. Any defect noted during the period shall be rectified by the contractor without any price implication to BHEL. Also suitable PG tests shall be conducted by the contractor to show the achievement of guaranteed parameters in line with the requirements of specification/ standards/ codes and to the satisfaction of Purchaser/ Owner.

11.0 Various Heads to be quoted for

Based on the above input it is recommended that the bidders shall submit their offers in the prescribed format only.

Sl. No.	Item Description	Unit	Qty.	Unit Ex-Works	Total Ex-Works	Unit ETC	Total ETC	Remarks
1	AIR COOLED DX TYPE CONDENSING UNIT - MINIMUM 33 TR ACTUAL CAPACITY	Nos.	2					DX Type Air cooled condensing unit, (1W+1S) at design outdoor conditions complete in all respect as per technical specification. The refrigerant compressor shall be Scroll, hermetic / Semi-hermetic type suitable for Refrigerant R-134a / R-407c / R-410a environment friendly HFC refrigerants with drive package, Suction and discharge valves, capacity control system, expansion valve, crank case heater etc. The unit shall be complete with expansion valve, all necessary fittings, accessories, insulated refrigerant piping to and from AHUs, drain piping, foundation bolts, nuts, washers etc. complete in all respect.
2	AIR HANDLING UNIT (AHU)	Nos.	2					AHU minimum capacity 15,000 CFM@65mm WC Static pr. (1W+1S) complete in all respect as per technical specification. Sheet metal cabinet type air handling units (double skin as per specification). The draw through horizontal AHUs shall comprise of, Dampers, pre filter, fine filters, DX-cooling coil, Fan section with fan & TEFC sq. cage induction motor, condensate drain pan, thermostatic controls and other accessories, like ladder along with supporting structure for filter and plenum, etc. to meet the AC load of Air conditioned room area as per specification. Each centrifugal fan shall be provided with VFD driven motor along with VVVFD (Along with starter panel)

								and other accessories as required for VFD shall also be included.
3	VFD PANEL FOR AHU with VVFD	Nos.	2					With VVFD as per technical specification.
4	FRESH AIR SUPPLY FAN	Nos.	1					Axial flow fresh air fan minimum capacity 1500 CFM@30mm WC Static pr. complete with cowl, bird screen, pre and fine filter and VCD as per technical specification
5	PAN HUMIDIFIER	No.	1					9 kW capacity.
6	STRIP HEATERS	Set	1					Electric strip heaters in adequate number of heater banks
7	TEMPERATURE CUM RH SENSOR	Nos.	2					
8	AIRSTAT	No.	1					
9	GSS DUCT SHEET - 24 G - AIR CONDITIONING SYSTEM	Sq. Mt.	250					AC ducting fabricated from GSS having zinc coating as per class 275 complete with hangers, supports, joints/ washers
10	GSS DUCT SHEET - 22 G - AIR CONDITIONING SYSTEM	Sq. Mt.	165					AC ducting fabricated from GSS having zinc coating as per class 275 complete with hangers, supports, joints/ washers
11	GSS DUCT SHEET - 20 G - AIR CONDITIONING SYSTEM	Sq. Mt	100					AC ducting fabricated from GSS having zinc coating as per class 275 complete with hangers, supports, joints/ washers
12	GSS DUCT SHEET - 18 G - AIR CONDITIONING SYSTEM	Sq. Mt	50					AC ducting fabricated from GSS having zinc coating as per class 275 complete with hangers, supports, joints/ washers
13	SUPPLY AIR DIFFUSER WITH COLLAR DAMPER	Nos.	4					
14	RETURN AIR DIFFUSER WITH COLLAR DAMPER	Nos.	5					
15	MOTORIZED FIRE DAMPER	Sq. Mt	3					Motorized Fire Damper excluding actuator with fire rating of 90 minutes
16	MOTORIZED ACTUATOR FOR FIRE DAMPER	Nos.	4					Actuators for fire damper with control panel

17	NON RETURN DAMPERS	Sq. Mt.	5					
18	VOLUME CONTROL DAMPER	Sq. Mt	4					
19	ACCOUSTIC INSULATION	Sq. Mt.	80					As per technical specification
20	THERMAL INSULATION	Sq. Mt.	485					As per technical specification
21	MCC CUM POWER DISTRIBUTION BOARD	No.	1					
22	MAINTENANCE TOOLS & TACKLES	Set	1			NA		As per clause 4.0.1 of section-1 of technical specification.
23	**MANDATORY SPARES**							
i.	V-BELT FOR AHU BLOWER OF EACH TYPE	Set	2					
ii.	AHU BLOWER BEARINGS OF EACH TYPE	Set	1					
iii.	BLOWER MOTOR BEARING FOR AHU	Set	1					
iv.	PRE FILTER FOR AHU	Nos.	3					
v.	FINE FILTER FOR AHU	Nos.	3					
vi.	ELECTRICAL ACTUATOR	Nos.	2					10% or 1 No. of each type, model and rating, whichever is more.
vii.	RELATIVE HUMIDITY SENSORS	Nos.	2					
viii.	LOCAL HUMIDITY/TEMPERATURE INDICATORS	Nos.	2					2 nos. each
ix.	VALVES	Set	1					10% or 1 No. of each type, class, size and model whichever is more.
x.	2 WAY, 3 WAY, 5 WAY VALVE MANIFOLDS	Set	1					10% or 1 No. of each type, class, size and model whichever is more.
xi.	FITTINGS	Set	1					10% or 1 No. of each type, class, size and model whichever is more.
24	CABLE LAYING ALONGWITH ACCESSORIES	Meter	1000	NA				

***** Remarks: Bidder should go through the technical specification 9585-001-572-PVM-U-004-01 for detailing of all equipments.***

a) The equipments and services to be furnished under this contract are detailed here under Cl. No. 11.0 of this section is for reference. Bidders shall work out the actual requirement based on the building & switchyard layout enclosed with this specification during detailed engineering stage.

b) The Bill of Quantities shall be read in conjunction with the Instructions to Bidders, General and Special Conditions of Contract, Technical Specifications, and Drawings.

c) The quantities given in the Bill of Quantities are estimated and provisional, and are given to provide a common basis for bidding. The basis of payment will be the actual quantities of work ordered and carried out, as measured by the Contractor and verified by the Purchaser and valued at the rates and prices bid in the priced Bill of Quantities.

d) A rate or price shall be entered against each item in the priced Bill of Quantities. The cost of Items against which the Contractor has failed to enter a rate or price shall be deemed to be covered by other rates and prices entered in the Bill of Quantities.

e) The whole cost of complying with the provisions of the Contract shall be included in the Items provided in the priced Bill of Quantities, and where no Items are provided, the cost shall be deemed to be distributed among the rates and prices entered for the related Items of Work.

f) General directions and descriptions of work and materials are not necessarily repeated nor summarized in the Bill of Quantities. References to the relevant sections of the Contract documentation shall be made before entering prices against each item in the priced Bill of Quantities.

g) Miscellaneous items like hardware, fixtures, fittings etc. shall be deemed to be included under the relevant BOQ items and bidders shall consider the same while quoting for BOQ items.

h) Exact requirements shall be worked out during detailed engineering after award of contract.

i) Bidders shall consider makes for various equipments as per Annexure-A, which shall be subjected to customer's (end client) approval during detailed engineering stage. No additional price implication shall be made to BHEL on account of customer's non-acceptance on any proposed makes/sub vendor provided by contractor during detailed engineering.

12.0 Inspection & Testing

Being standard equipment, no shop tests have been envisaged for air conditioning equipments. Test certificates for all major equipments of air conditioning system will be submitted to customer for verification and release of dispatch instruction.

After the installation is over, the system will be subjected to performance guaranteed test in the presence of customer.

"Performance Guarantee Test Procedure" will be submitted during detailed engineering for approval of customer/consultant.

All the equipments shall be inspected prior to dispatch in line with relevant IS, approved GTP/ drawing and technical specification, BHEL/ customer approved QAP.

ACCEPTANCE TEST

Room condition test shall consist of taking the reading of dry bulb and wet bulb temp at different locations points to be mutually decided at site in the areas which are air-conditioned by the respective system/plant.

Room condition test shall be done after stabilization of the system. The dry and wet bulb temp shall be measured by measured by sling psychomotor which will have accuracy of +/-0.5% with atleast count of 0.5 Deg.C. This will be carried out for 24 hrs continuously and readings will be taken every two hours. Standby equipment should be changed over during these 24 hours. This test shall be carried out during summer during month May to August when the dry bulb temp is generally high and during. The Relative humidity shall be determined from psychometric chart.

The following measurements are also to be done prior to the acceptance of the plant by the client:

a. Air Quantity measurement to be taken at the Inlet Louver to establish the Equipment capacity in line with the specification requirement.
b. Power consumption to be measured for each equipment.
c. Measurement of Noise and Vibration for different Equipment.

- Painting of all equipment and structures shall be provided and the colour & quality shall be subject to approval by the Client / Engineer.

ANNEXURE-I

Cable Sizes being procured by BHEL for Sub-Station

Sl. No.	Item Description	Length (Mtrs)	Remark
A	**XLPE Auxiliary Power Cables**		**Bidder to furnish the quantity required against the applicable cable size.**
1	1C X 630 sq mm XLPE/Aluminium, FRLS, Armoured Auxiliary Power Cable		
2	3.5C X 300 sq mm XLPE/Aluminium, FRLS, Armoured Auxiliary Power Cable		
3	3.5C X 150 sq mm XLPE/Aluminium, FRLS, Armoured Auxiliary Power Cable		
4	1C X 150 sq mm XLPE/Aluminium, FRLS, Armoured Auxiliary Power Cable		
B	**PVC Auxiliary Power Cables**		
5	3.5 C X 70 sq mm PVC/Aluminium, FRLS, Armoured Auxiliary Power Cable		
6	3.5 C X 35 sq mm PVC/Aluminium, FRLS, Armoured Auxiliary Power Cable		
7	4 C X 16 sq mm PVC/Aluminium, FRLS, Armoured Auxiliary Power Cable		
8	4 C X 6 sq mm PVC/Aluminium, FRLS, Armoured Auxiliary Power Cable		
9	2 C X 6 sq mm PVC/Aluminium, FRLS, Armoured Auxiliary Power Cable		
C	**PVC Control Cables**		
10	19 C X 2.5 sq mm PVC/Copper, FRLS, Armoured Control Cables		
11	14 C X 2.5 sq mm PVC/Copper, FRLS, Armoured Control Cables		
12	10 C X 2.5 sq mm PVC/Copper, FRLS, Armoured Control Cables		
13	5 C X 2.5 sq mm PVC/Copper, FRLS, Armoured Control Cables		
14	2 C X 2.5 sq mm PVC/Copper, FRLS, Armoured Control Cables		
15	4 C X 10 sq mm PVC/Copper, FRLS, Armoured Control Cables		

SECTION -2

EQUIPMENT SPECIFICATION

- Customer contract document is enclosed as part of this specification, and all details specification of applicable equipments covered under section-1 shall be adhered to customer's requirement given in section-2. Regarding quantities and type of Air conditioning System, section-1 shall be referred. In case of variance between section-1 and section-2, the requirement of Section-1 shall prevail ***(except those points where specifically mentioned to follow customer specification strictly in this specification)***. Customer specification as annexure to section-2 shall strictly to be followed by contractor.

SUB – SECTION – A-17

AIR CONDITIONING

AIR CONDITIONING SYSTEM

1.00.00 GENERAL

1.01.00 This section of specification covers details of system specifications, detailing the areas to be air conditioned, basis of design, brief description of the system, equipment and services to be furnished by bidder. The supply, delivery and erection of the entire equipment listed here shall be in bidder's scope of work.

2.00.00 AREAS TO BE COVERED UNDER AIR CONDITIONING SYSTEM

2.01.00 The areas to be air-conditioned shall be as follows:

a) Control rooms/Central Control Rooms, Control Equipment Rooms, UPS & battery charger room, SWAS room, static excitation control room (if applicable) etc.

b) Centralized Air conditioning system for Ash handling control room, Ash handling VFD room, FGD control room, ESP control room, etc. of Unit # 1, # 2 and # 3.

c) Switchyard (GIS Control building).

d) Service building: Various office areas, entrance lobbies, visitor & VIP lounge, reception area, etc.

e) Administrative building: Various office areas, entrance lobbies, visitor & VIP lounge, reception area, Satcom area, etc.

f) Auditorium building, Canteen, IT Building, Permanent stores etc.,

g) Fire water pump house control room.

h) Fire water booster pump house control room.

i) Ash Water recirculation control room (if applicable)

j) CHP control room and its RIO rooms

k) Auxiliary Boiler Control Room

l) Water system control room and remote I/O associated with PT plant, AWRS and DM and CPU service vessels / Regeneration area/control room

m) Fuel oil Pump house (pressurizing & unloading) control room.

n) CT SWGR control room.

o) Satcom building (if applicable).

p) Township & other miscellaneous building, etc.

q) Cassette and Hi-wall Air-conditioners for Other auxiliary control room /control room buildings/RIO rooms not listed above but covered in the scope of Bidder.

r) Apart from the above, any area/building which are in the scope of the bidder and require air conditioning.

3.00.00 REDUNDANCY OF EQUIPMENTS

3.01.00 Redundancy of various A/C system equipments shall be as follows:

a) For Main Plant Areas (control room, control equipment room, UPS room and SWAS room, static excitation control room (if applicable)):

i) Vapour compression type water chilling units: 5x33.33%

ii) Chilled water pumps: 5x33.33%

iii) Condenser water pumps: 5x33.33%

iv) Cooling Towers (with VVVFD): 5x33.33%

v) AHUs: Minimum 50% standby of total AHU capacity shall be provided to each AHU room/unit. AHUs shall be Variable voltage variable frequency driven (VVVFD).

b) For Ash handling control room, Ash handling VFD room, FGD control room, ESP control room, etc. of Unit # 1, 2 and 3:

i) Vapour compression type Air cooled chiller units: 3X50%

ii) Chilled water pumps: 3X50%

iii) AHUs: Minimum 50% standby of total AHU capacity shall be provided to each AHU room/unit. AHUs shall be Variable voltage variable frequency driven (VVVFD).

c) Service Building:

i) Screw type water chilling units: 2X100%

ii) Primary Chilled water pumps: 2X100%

iii) Secondary chilled water pumps (with VVVFD): 2X100%

iv) Condenser water pumps: 2X100%

v) Cooling Towers (with VVVFD Fan) : 2X100%

vi) All AHU's working & no standby AHU. AHUs shall be Variable frequency driven (VVVFD)

d) Administrative Building:

i) Screw type water chilling units: 2X100%

ii) Primary Chilled water pumps: 2X100%

iii) Secondary chilled water pumps (with VVVFD): 2X100%

iv) Condenser water pumps: 2X100%

v) Cooling Towers (with VVVFD Fan): 2X100%

vi) All AHUs working & no standby AHU. AHUs shall be Variable frequency driven (VVVFD)

e) Water system control Room Building:-

i) Air cooled condensing unit (D-X type) Air conditioners: 2X100%

ii) AHU (with VVVFD): 2X100%.

f) Switchyard (GIS)control Room Building:-

i) Air cooled condensing unit (D-X type) Air conditioners: 2X100%

ii) AHU (with VVVFD): 2X100%.

g) Auditorium Building:-

i) Air cooled condensing unit (D-X type) Air conditioners: 2X50%

ii) AHU (with VVVFD): 2X50%.

h) IT Building:-

i) Air cooled condensing unit (D-X type) Air conditioners: 3X50%

ii) AHU (with VVVFD): 3X50%.

i) Canteen building:-

i) Air Cooled condensing units (D-X type): - 2X50%

ii) AHU (with VVVFD): 2 X 50%

j) 100% standby shall be provided for area served by Cassette / Hi-wall Split type Air conditioners for all other offsite control rooms.

k) Fresh air fans shall be 1 x 100 % Capacity for each AHU room.

4.00.00 EQUIPMENT DESCRIPTION – AIR CONDITIONING SYSTEM

4.01.00 **Vapour compression type machines**

4.01.01 Each chilling unit shall comprise of compressor with drive motor, Air cooled Condenser, Water Chiller/evaporator, Chilled water pumps, Condenser Cooling Water pumps (if applicable) other accessories such as supporting structure, vibration isolators, insulation, piping, valves, instrumentation, microprocessor / PLC based Control panel, etc. Chilling unit shall have **stepless** capacity control. The screw/centrifugal compressor based chilling unit to be supplied shall be ARI /Eurovent/Equivalent standard certified (if applicable).

4.02.00 **Chilling Unit**

(A) Water-cooled type

Type		Water-cooled type. (Chillers for main plant shall be with multiple compressors)
Vibration isolators	:	Steel spring/ Neoprene rubber cushy foot/ neoprene serrated rubber pad type with isolation efficiency not less than 85%.
Compressor Type	:	Compressor shall be Screw type (open/semi-hermetic/multiple hermetic)
Type of drive	:	Motor driven, along with Star delta/Double delta Starter.
Capacity	:	Minimum capacity shall be suitable for the identified/selected evaporating temperature and

		condensing temperature.
Condenser		
Type	:	Water cooled shell and tube type.
Fluid	:	Shell side – Refrigerant
	:	Tube side - Water
Capacity	:	To match with respective compressor and to provide atleast 2 deg. C sub-cooling. To store full charge of refrigerant.
Design fouling Factor	:	Not less than 0.0002 (in MKS units)
Shell material	:	Mild steel (IS: 2062) / SA 106 Gr. B
Tube material	:	Replaceable seamless copper
Fin material		Copper
Accessories	:	As required such as Purge and drain connections, relief valves, liquid line shut-off valves, refrigerant filling charging, flow switches, Isolating valves, pressure & temperature indicators at inlet and outlet etc.
Refrigerant	:	The refrigerant shall be R-134a/R-410A/R-407C or any other environment friendly refrigerant.
Steel structure	:	The complete condensing/ chilling unit shall be mounted on steel structure and shall be provided with necessary vibration isolators
Inlet temperature		33-36 ^{o}C.
Leaving temperature differential	:	Maximum 5 ^{o}C.
Evaporator		
Type	:	Shell and tube type
Superheating of	:	At least 2 deg.C
Design Fouling Factor	:	Minimum 0.0001 (MKS units)
Fluid	:	Shell side - Refrigerant
	:	Tube side - Water
Capacity	:	To match with respective plant capacity.
Shell material	:	Mild steel (IS : 2062) / SA 106 Gr. B

Tube material		Plain tube internally /externally finned copper as per the manufacturer's standard practice.
Fin material	:	Integral
Accessories	:	Purge and drain connections, Isolating valves, flow switches, Pressure & temperature indicators at inlet and outlet, Anti-freeze thermostats, electronic expansion valve or float assembly as applicable, pilot solenoid valve, Relief valves, Operating thermostats for capacity control, supporting frame, etc.
Steel Structure	:	The complete condensing/ chilling unit shall be mounted on steel structure and shall be provided with necessary vibration isolators.

(B) Air-cooled type

Type		Air-cooled type chilling unit.
Vibration isolators	:	Steel spring/ Neoprene rubber cushy foot/ neoprene serrated rubber pad type with isolation efficiency not less than 85%.
Casing /frame material	:	GI sheet (3.15 mm thickness minimum)
Design ambient	:	Air cooled chiller shall be designed for minimum 50deg.C ambient temperature.
Noise level	:	Max 85 dba under free field condition at horizontal 1m distance and 1.5m height
Compressor Type	:	Compressor shall be Screw type (open/semi-hermetic/multiple hermetic)
Type of drive	:	Motor driven, through direct/V-belt along with Star delta/Double delta Starter.
Capacity	:	Minimum capacity shall be suitable for the identified/selected evaporating temperature and condensing temperature.
Refrigerant	:	The refrigerant shall be R-134a/R-410A/R-407C or any other environment friendly refrigerant.
Capacity control	:	Automatic (stepless).

Air Cooled Condenser		
Type	:	Shall be as per manufacturer standard and proven practice. However design ambient temperature for air cooled condenser shall be minimum 50 deg.C
Evaporator		
Type	:	Shell and tube type
Superheating of	:	At least 2 deg.C
Design Fouling Factor	:	Minimum 0.0001 (MKS units)
Fluid	:	Shell side - Refrigerant
	:	Tube side - Water
Leaving/entering water temperature	:	6.7 dec.C / 12.2 deg.C
Capacity	:	To match with respective plant capacity.
Shell material	:	Mild steel (IS : 2062) / SA 106 Gr. B
Tube material		Plain tube internally /externally finned copper as per the manufacturer's standard practice.
Fin material	:	Integral
Accessories	:	Purge and drain connections, Isolating valves, flow switches, Pressure & temperature indicators at inlet and outlet, Anti-freeze thermostats, electronic expansion valve or float assembly as applicable, pilot solenoid valve, Relief valves, Operating thermostats for capacity control, supporting frame, etc.
Steel Structure	:	The complete condensing/ chilling unit shall be mounted on steel structure and shall be provided with necessary vibration isolators.

4.03.00 **Condensing Unit -Air-Cooled (D-X type)**

Condensing unit

Type : Air cooled scroll type

Vibration isolators : Steel spring / Neoprene rubber cushy foot type with isolation efficiency not less than 85%.

Compressor

Type	:	The Compressor shall be scroll, serviceable, either hermetic type or semi-hermetic type with automatic capacity control (minimum 3 steps).
Type of drive	:	Motor driven.
Refrigerant	:	The refrigerant shall be R-134a/ R-410A/R-407C or any other environment friendly refrigerant.
Accessories	:	High/Low pressure cutouts, oil pressure switches, relief valves, pressure gauges at each stage, lube oil and control oil pressure gauges, suction & discharge stop valves, Muffler, Crank case heaters, oil filters, magnetic oil separators, temperature indicators for lube oil/heaters, oil level indicators, safety thermostat for crank case heater, vibration isolators, etc.
Capacity	:	Minimum capacity shall be suitable for the identified/selected at evaporating temperature and condensing temperature and shall be indicated.

4.04.00 **Air Handling Unit (AHU)**

4.04.01 Each AHU shall consist of casing, fan impeller section, cooling coil section, damper section, steel frame with anti vibration mountings (AVMs) having minimum 85% vibration dampening efficiency and flame retardant, water proof neoprene impregnated flexible connection on fan discharge. Isolation dampers at the suction and discharge of each AHU shall be provided, in case return air duct is directly connected to AHU. However, in case AHU room is used for return air, isolation dampers are required to be provided only at AHU discharge of each AHU. Pre-filter at the suction and fine (micro-vee type) and absolute (HEPA type) filters (wherever applicable) at the discharge of each individual AHU, and heater section in the common discharge of AHUs. NRD shall be provided at outlet of each AHU when multiple AHU used for a common plenum.

4.04.02 The casing of AHUs shall be of double skin construction. Double skin sandwich panels (inside and outside) shall be fabricated using minimum 0.63 mm (24g) galvanized steel sheet (thickness of galvanization as per manufacturer's standard) , with 25mm thick polyurethane foam insulation of minimum 38 Kg/Cum density in between. Suitable reinforcements shall be provided to give structural strength to prevent any deformation/buckling.

4.04.03 Sloping condensate drain pan shall be made of minimum 1.2 mm thick Stainless Sheet Steel. It shall be isolated from bottom floor panel through 25mm thick heavy duty treated for Fire (TF) quality expanded polystyrene or polyurethane foam. Drain pan shall extend beyond the coil.

4.04.04 Cooling coil (min. 4 row deep) shall be made of seamless copper tubes with aluminium fins firmly bonded to copper tubes and shall be provided with suitable drains and vents connections.

4.04.05 All filter plenum shall be provided with a walking platform inside the plenum chamber for filter cleaning purpose. Inspection door shall be provided at the plenum chamber and a removable type ladder shall be attached to plenum.

4.04.06 **Centrifugal fan for AHU**

a)	Fan Type	:	Double Width Double Inlet (DWDI) Centrifugal Type
b)	Fan impeller	:	Backward curved blades
c)	Casing material	:	GI /Mild steel with minimum thickness of 3 mm.
d)	Impeller material	:	Carbon steel
e)	Shaft	:	EN 8 Steel
f)	Fan bearings	:	Self aligning type, permanently lubricated, heavy duty with a design life of 10,000 operating hours.
g)	Critical speed	:	First critical speed of rotating assembly shall be at least 25% above the operating speed.
h)	Drive	:	Motor driven with removable belt guard. Motor rating (at 50 deg.C ambient) shall be atleast fifteen percent (15%) above the maximum load demand of drives at the design duty point.
i)	Fans	:	For AHUs of capacity 50,000 CMH and above, Bidder may offer two (2) Nos. centrifugal fans of equal capacity for each AHU provided all such AHUs are accommodated within the space identified by the Employer.

4.04.07 **Mixing Box:**

Mixing box shall be complete with fresh and return air dampers. Mixing box shall be provided whenever the return air is ducted back to the AHU.

4.04.08 **Pan Humidifier:**

Pan humidifier shall be made of 22 gauge SS 304 tank, duly insulated with 25 mm thick resin bonded fiber glass insulation (min. 24 Kg/m3 density) with 0.5 mm GSS cladding. The humidifier shall be complete with stainless steel immersion heaters, safety thermostat, float valve with stainless steel ball, sight glass, overflow and drain connections, steam outlet nozzle and float switch. Step controller shall be provided for switching on / off heater banks as per system requirement.

4.05.00 HI-WALL SPLIT/CASSETTE/PRECISION AIR-CONDITIONERS

4.05.01 Hi-wall Split/cassette air conditioners shall in general consist of the following:

i) Casing

ii) Hermetically sealed rotary/scroll Compressor

iii) Condenser

iv) Evaporator and condenser cooling fan

v) Cooling coil

vi) Filters

vii) Piping, valves, refrigerant strainer, etc.

viii) Controls, instruments, control panel/starter panels.

ix) Vibration isolator pads, etc as required.

x) Refrigerant as per manufacturer practice.

4.05.02 Indoor unit of Ceiling Mounted Cassette Type Unit (Multi Flow Type):

The housing of the unit shall be powder coated galvanized steel. All the indoor units regardless of their difference in capacity should have same decorative panel size for harmonious aesthetic point of view.

Unit shall have four way supply air grills on sides and return air grill in center.

Each unit shall have high lift drain pump and very low operating sound.

4.06.00 **COOLING TOWERS (for chilling units)**

4.06.01	Type	:	Induced draft, cross or counter flow.
4.06.02	Casing & Sump tank	:	F.R.P/G.R.P
4.06.03	Fan	:	Cast Aluminum / FRP Propeller type and multi-blade aerofoil construction with adjustable pitch.
4.06.04	Fill	:	Non combustible PVC or equivalent
4.06.05	Louvers:	F.R.P. /PVC/ Aluminum.	
4.06.06	Nozzles:	Brass with chrome plating / Polypropylene.	
4.06.07	Eliminators	:	In removable sections to reduce the drift loss to 0.2% of water flow.
4.06.08	Supporting structure	:	Mild steel with spray galvanization or epoxy painting.
4.06.09	Strainer at water outlet	:	Plate strainer made of GI/SS wire mesh of 16 gauge.

4.06.10	Bird screen on top of tower	:	25 mm square made of GI/SS wire mesh of 16 gauge.
4.06.11	Distribution Pipe (if any)	:	Galvanised MS pipe.
4.06.12	Accessories	a)	Drain connection with isolation valve.
		b)	Make up connection with ball – float valve, back up gate valve and a bypass with a gate valve for manual operation.
		c)	Overflow connection.
		d)	Equalizing connection to connect sump of all the towers wherever applicable.
		e)	Access door in louvers/fan deck.
5.00.00	**BALANCE EQUIPMENT SPECIFICATION**		
5.01.00	**Centrifugal Pumps**		
	a) Type	:	Horizontal Centrifugal, Axially split type casing pump
	b) Impeller	:	Closed type
	c) Material of Construction		
	i) Casing	:	2% Ni Cast Iron : IS:210 Gr. FG-260
	ii) Impeller	:	Bronze IS:318 Gr-2
	iii) Wearing rings	:	Bronze
	iv) Shaft	:	SS 316
	v) Shaft sleeve	:	SS 316
	vi) Lantern ring	:	Brass / Bronze
	vii) Packing	:	Asbestos free
	viii) Base Plate	:	Carbon steel as per IS:2062
	ix) Speed	:	Maximum 1500 rpm
	x) Other requirements	:	To refer to **Annexure-I** titled “Horizontal Pumps” of this sub section.

5.02.00 **Material of Construction for Piping & Fittings**

a) Piping for Chilled and Condenser water lines : Heavy grade-IS:1239 or Equivalent upto150 NB and IS:3589 or Equivalent for pipes beyond 200 NB with thickness as indicated in **Annexure-II**

b) Refrigerant piping : : Seamless steel tubes conforming heavy grade IS:1239 or copper tubes as per IS:2501 (copper material as per IS:191 hard copper grade).

c) Drain piping : Same as (a) above & galvanized as per IS:4736.

d) Fittings :

1) The steel fittings shall conform to ASTM A234 Gr. WPB and dimensional standard to ANSI B 16.9/ANSI B16.11 / equivalent for sizes 65 NB and above.

2) For sizes 50 NB and below, the material shall conform to ASTM A-105.

3) All steel flanges shall be of slip on type and shall conform to ANSI B 16.5

4) For pipe sizes above 350 NB, fabricated fittings from sheets of adequate thickness may be used. The bend radius in case of mitre bends shall be minimum 1.5 times the nominal pipe diameter and angle between two adjacent sections shall not be more than 22.5 deg and shall be as per BS:2633/BS:534.

5) Fittings, flanges and pipe joints of refrigerant piping shall conform to ANSI B31.5

5.03.00 **VALVES**

5.03.01 Valves shall have full sizes port and suitable for horizontal and as well as vertical installation.

5.03.02 Valves for regulating duty shall be of globe type suitable for controlling throughout its lift.

5.03.03 All safety /relief valves shall be so constructed that the failure of any part does not obstruct the free discharge.

5.03.04 Valves shall be furnished with back seating arrangement for repacking while working under full working pressure.

5.03.05 Manual gear operators be provided for valves of size 200 NB and above.

5.03.06 All valves shall be supplied with companion flanges, nut, bolts & washers, etc.

5.03.07 The refrigerant line valves shall have steel or brass body with TEFLON gland packing. The construction of disc shall be either globe or angle type. The valve seat shall have white metal lining or equivalent.

5.03.08 ~~All water line valves shall be of Cast Iron body for sizes 65 NB and above conforming to IS :14846 and Gun Metal construction for sizes less than 65NB conforming to IS:778. Cast Iron parts shall conform to IS:210 Gr FG 220. Butterfly valves shall confirm to latest revision of BS:5155 or equivalent standard of required class/rating.~~

5.03.09 **Balancing / Controller Valves:**

~~The valves of sizes 32 mm to 65 mm dia shall be of gun metal / cast iron construction with screwed ends. Whereas valves of sizes 75 mm and above shall be of cast iron construction with internal parts of SS 410 and EPDM / nitrile seat with flanged ends.~~

5.04.00 **AIR FILTERS**

5.04.01 **Pre Filter**

1) Type : Flange / Cassette

2) Pre-filter shall contain washable non-woven synthetic fiber or High density Polyethylene (HDPE) media having 18G GSS / 16G Al alloy frame. The filter media shall be supported with HDPE mesh on air inlet side & Aluminium expanded metal on exit side or G.I. wire mesh on both sides.

3) **Other requirements : (as applicable)**

   a) Suitable aluminium spacers be provided for uniform air flow;

   b) Casing shall be provided with neoprene sponge rubber sealing.

   c) Capable of being cleaned by water flushing.

   d) Density of filter medium shall increase in the direction of air flow in case of metallic filter.

   e) Filter media shall be fire retardant and resistant to moisture, fungi, bacteria & frost.

4) **Efficiency :**

   Average arrestance of 65 - 80 % when tested in accordance with BS:6540/ASHRAE – 52 – 76 / EN-779.

5) Minimum thickness : 50 mm

6) Face Velocity : Not more than 2.5 m/sec.

7) Pressure drop : Initial pressure drop - Not to exceed 5.0 mm WC at rated flow.

   Final pressure drop - Upto 7.5 mm WC.

8) Location : a) At the suction of each AHUs

   : b) At the suction of each Fresh air fan

   : c) At the suction of each Supply air fan

5.04.02 **Fine Filters (Microvee type)**

1) Type : Flange / Cassette

2) Fine filter shall contain washable non-woven synthetic fibre or High density Polyethylene (HDPE) media having 18G GSS / 16G Al alloy frame. The filter media shall be supported with HDPE mesh on air inlet side & Aluminium expanded metal on exit side or G.I. wire mesh on both sides.

3) Other requirements :
   a) A neoprene sponge rubber sealing shall be provided on either face of the filter frame.
   b) Capable of being cleaned by air or water flushing.
   c) Filter media shall be fire retardant and resistant to moisture, fungi, bacteria & frost.

4) Efficiency : Average arrestance > 90% when tested in accordance with BS:6540/ASHRAE–52-76 / EN-779.

5) Minimum thickness : 150 mm or 300 mm.

6) Face Velocity : Not more than 1.2 m/sec for 150 mm and not more than 2.4 m/sec. for 300 mm.

7) Pressure drop : Initial pressure drop - Not to exceed 10 mm WC at rated flow ; Final pressure drop-Up to 25 mm WC.

8) Location :
   i) At the discharge of each individual AHU.
   ii) At the discharge of each Fresh air fan.
   iii) At the discharge of each supply air fan having static pressure 30mm wc or more.

5.04.03 **Absolute Filter / Hepa Filter**

1) Media : 100% sub-microscopic glass fibers.

2) Frame : Aluminium alloy of (minimum 16 gauge conforming to IS: 737) with handles.

3) Other requirements : A neoprene sponge rubber sealing shall be provided on either face of the filter frame.

4) Efficiency : 99.97 % down to 0.3 micron when tested in accordance with BS: 3928 (Sodium flame test)/FED–209B.

5) Minimum thickness : 300 mm

6) Face Velocity : Not more than 1.2 m/sec.

7) Pressure drop : Initial pressure drop - Not to exceed 25 mm WC at

rated flow;

Final pressure drop - Up to 75 mm WC.

8) Location : At the discharge of each individual AHUs for Control Equipment room / Control room areas.

6.05.00 **LOW PRESSURE AIR DISTRIBUTION SYSTEM**

6.05.01 Material of air distribution system shall be through galvanized steel sheet (Conforming to Class 275 of IS: 277) or Aluminium alloy (grade 19000 / SIC or 3100 / NS3 of IS: 737)

6.05.02 **Thickness of rectangular ducts shall be as follows:**

Larger Dimension of duct (mm)	Thickness of GI sheet(mm)	Thickness of Aluminium sheet (mm)
up to 750 mm	0.63 (24 G)	0.80
751 to 1500	0.80 (22 G)	1.00
1501 to 2250	1.00 (20 G)	1.50
2251 & above	1.25 (18 G)	1.80

6.05.03 **Thickness of round ducts shall be as follows :**

Diameter of Round duct (mm)	Thickness of GI sheet(mm)	Thickness of Aluminium sheet (mm)
150 to 500	0.63	0.80
501 to 750	0.80	1.00
751 to 1000	0.80	1.00
1001 to 1250	1.00	1.50
1251 & above	1.25	1.80

6.05.04 **Duct Fabrication and Supports:**

a) Duct fabrication shall be as per the latest relevant BIS/SMACNA standard.

b) Ducts for A/C system may be site fabricated or factory fabricated and installed at site. However, in case of partly used factory fabricated ducts, vendor shall take back the unused ducts.

c) The ducts routed inside the buildings with larger side greater than 2250 mm shall be supported by 16mm MS rods and 50x50x3 mm MS double Angles while those below 2250 mm shall be supported by 10mm MS Rods and 40x40x3 MS angles. The duct supports shall be at a distance of not more than 2000 mm for A/C system. The MS rods for these ducts routed inside the building shall be hung from the existing floor beams/wall beams/roof beams/columns as provided by the Employer with provision of necessary auxiliary or special steel members or by hooks or can be provided by contractor by dash fasteners fixed to the ceiling slab. No supports

shall be taken from horizontal/vertical bracings of the structures. All items of duct support including MS rods, MS angles and double angles, auxiliary or special steel members, hooks, dash fasteners coach screws and all other supporting material required shall be provided by the bidder.

d) Where the sheet metal duct connects to the intake or discharge of fan units a flexible connection of fire retarding, at least 150 mm width shall be provided of closely woven, rubber impregnated double layer asbestos/canvas or neoprene coated fibre glass.

e) All curves, bends, off-sets and other transformations shall be made for easy and noiseless flow of air. The throat of every branch duct shall be sized to have the same velocity as in the main duct to which the branch duct is connected.

f) Wherever duct passes through a wall, the opening between masonry and duct work shall be neatly caulked or sealed to prevent movement of air from one space to the adjoining space.

g) Wherever pipe hangers or rods pass through the ducts, light and streamline easement around the same shall be provided to maintain smooth flow of air.

h) Access doors shall be provided in the duct work or casing on the both sides of the equipment to be serviced. All access doors shall be of adequate size and shall be lined with substantial felt edging to prevent air leakage. Access doors shall be of built up construction, structurally strong and each shall have at least two hinges. Access doors shall have two rust proof window sash of approved type. All doors shall be set so as to flush with insulation or plaster finish on the duct.

i) Where ever horizontal ducts are running outside the building and or at locations where it is not possible to support the ducts from Employers ceiling/floor due to non-availability of the same, the base steel frame/truss work for supporting the ducts between two columns shall be provided by Employer. However, all other auxiliary steel members, hooks, rods, etc. for supporting the duct work with the base frame/truss work shall be provided by the bidder. For vertical ducts running outside the building, bidder to take support from building columns and beams which is in Employer scope. However, all other auxiliary steel members, hooks, rods, etc. for supporting the duct work with the employers beam & columns shall be provided by the bidder.

6.05.05 Splitters and dampers shall be provided for equipment/area isolation and for proportional volume control of system. The same shall be minimum 16 gauge GS sheet of quadrant type with suitable locking device, mounted outside of duct in accessible position.

6.06.00 **Factory fabricated ducts:**

i) All ducting shall be fabricated of LFQ (Lock Forming Quality) grade prime G.I.

ii) Unless otherwise specified here, the construction, erection, testing and performance of the ducting system shall conform to the SMACNA-1995 standards ("HVAC Duct Construction Standards-Metal and Flexible-Second Edition-1995" SMACNA)

iii) All ductwork including straight sections, tapers, elbows, branches, show pieces, collars, terminal boxes and other transformation pieces must be factory fabricated by utilizing the machines and processes as specified in SMACNA or by equivalent technology. In equivalent method, the fabrication shall be done by utilizing the

following machines and process to provide the requisite quality of ducts and speed of supply:

a. Coil lines to ensure location of longitudinal seams at corners/folded edges only to obtain the required duct rigidity and low leakage characteristics. No longitudinal seams permitted along any face side of the duct.

b. All ducts, transformation pieces and fittings to be made on CNC profile cutters for required accuracy of dimensions, location and dimensions of notches at the folding lines.

c. All edges to be machine treated using lock formers, flangers and roll-bending for turning up edges.

d. Sealant dispensing equipment should be used for applying built-in sealant in Pittsburgh lock where sealing of longitudinal joints are specified. Sealing of longitudinal joint is compulsory for the ducts over 2" w.g. static pressure

iv) All transverse connectors shall be 4-bolt slip-on flange system with built-in sealant, if any. To avoid any leakage additional sealant shall be used.

v) Factory fabricated ducts shall have the thickness of the sheet as follows:

Sl.No.	**Size of Duct**	**Sheet Thickness**
i)	upto 750 mm	0.63 mm
ii)	751 mm to 1500 mm	0.80 mm
iii)	1501 mm to 2250 mm	1.00 mm
iv)	2251 mm and above	1.25 mm

6.07.00 **Diffusers, Grills & Dampers :**

6.07.01 Supply air diffusers/grills with factory fitted volume control dampers be provided for all air-conditioned areas.

6.07.02 Return air diffusers of air conditioned areas shall be without volume control dampers.

6.07.03 The diffusers/grills shall be of extruded Aluminum of minimum 2 mm thick with powder coating. The colour of power coating shall be as per the interior Décor.

6.07.04 Supply air grills shall be of double deflection type and return air grills shall be of single deflection type.

6.07.05 The nozzle type diffusers shall be fabricated from minimum 1.5mm aluminium sheet. The base shall be fixed type. The nozzle shall be of volute design with the

Spout diameter being half the base dia. and designed for low noise and long throw. The nozzle shall be able to rotate to any angle within the base. The whole assembly shall be powder coated as per interior decor.

6.07.06 All volume control (VC) damper shall be operated by a key from the front of the grills/diffusers and shall be of GI sheet.

6.07.07 The thickness of VC dampers shall be of minimum 20 gauge and thickness of louvers shall be of minimum 22 gauge.

6.07.08 Suitable vanes shall be provided in the duct collar to have uniform and proper air distribution. Bank of Baffles wherever required shall also be provided.

6.07.09 Fire dampers shall be motor operated type and shall have fire rating of minimum 90 minutes.

6.07.10 All plenum chambers of connections to fans, dampers etc shall be constructed in 18 gauge GS sheet and supported on MS angle frames,

6.07.11 All ducting surfaces coming in contact with corrosive fumes or gases shall be painted with three coats of epoxy paint over a coat of suitable primer.

6.08.00 **Thermal and Acoustic Insulation**

6.08.01 **A)** Application with Glass Wool

(a.) All surfaces to be insulated both thermally and acoustically shall be thoroughly cleaned, dried and an adhesive (CPRX compound of Shalimar Tar Products or Equivalent) be applied @ 1.5 Kg /Sqm on the surface.

(b.) Insulation material (either expanded polystyrene foam or Glass Wool/ Glass fiber or Equivalent) shall be struck to the surface. All the joints shall be sealed with bitumen.

(c.) Insulation mass to be covered with 500 gauge polythene sheet with 50 mm overlaps and sealing all joints on hot side.

(d.) Insulation Finish of types specified under shall be provided thereafter.

B) Application with Nitrile Rubber:

(a) All surfaces to be insulated shall be properly cleaned.

(b) A suitable adhesive such as SR 998 or equivalent shall be applied over the surfaces to be insulated and insulation material surfaces.

(c) Insulating material shall than be pasted onto the surfaces in a manner to avoid stretching and any air entrapment within.

(d) Two layers of Glass Cloth with a suitable adhesive as SR 998 or equivalent shall be then applied over the insulating material to avoid surface weathering.

C) Application with Polyurethane Foam & Polyisocyanurate Foam

(a) All surfaces to be insulated shall be cleaned.

(b) A suitable adhesive such as CPRX or Loid Bond 83 or equivalent shall be applied over the surface to be insulated and insulation material surfaces.

(c) Insulating material with aluminum foil lamination shall then be pasted onto the surface in a manner to avoid stretching and any air entrapment within.

(d) Two layers of Glass Cloth with a suitable adhesive as Loid Bond 130 shall be then applied over the insulating material, to avoid surface weathering.

(e) Insulation Finish of types specified under shall be provided thereafter.

6.08.02

Type of Insulation & Finish

Sl. No.	Surface	Insulation Material	Insulation Form	Thick (mm)	Finish (mm)
1.	Supply & return air duct of AC System	Resin bonded glass wool or	Roll /Slab	50	F-3
		Closed Cell Elastomeric Nitrile Rubber	sheet	19	As per manufacturer std.
		or Polyisocyanurate Foam	Slab	30	F-3
2.	Refrigerant (Suction and liquid lines)	Closed Cell Elastomeric Nitrile Rubber	tube	19	As per manufacturer std.
		or Rigid Polyurethane Foam	Pipe Section	50	F-1 (a)
3.	AHU drain pipe	Closed Cell Elastomeric Nitrile Rubber	tube	19	As per manufacturer std.
		or Rigid Polyurethane Foam	Pipe Section	50	F-1 (a)
4.	AHU condensate pan (insulation if required)	Mineral wool or resin bonded glass wool	Slab	25	As per manufacturer std.
5.	Chilled water piping, valves & specialties	Resin bonded Mineral wool or resin bonded glass wool	Pipe section	75	F-1/F-3
		or Rigid Polyurethane Foam	Pipe Section	50	F-3

Sl. No.	Surface	Insulation Material	Insulation Form	Thick (mm)	Finish (mm)
6.	Chiller (insulation if required)	---------- As per manufacturer std.----------			
7.	Chilled water pumps	Resin bonded Rockwool wool or resin bonded glass wool	Slab	75	F-1/ F-3
		or Rigid Polyurethane Foam	Slab	50	F-3
8.	Expansion tank with associated piping	Resin bonded Rockwool wool or resin bonded glass wool	Slab/ Pipe section	75	F-1/ F-3
		or Rigid Polyurethane Foam	Slab	50	F-3
9.	Acoustic insulation of duct	Resin bonded Glass wool	Slab	25	As per specifications
10.	Exposed air duct	Resin bonded Glass wool/Rockwool	Roll/Slab	50	F-4
		or Polyisocyanurate Foam	Slab	50	F-4(a)

6.08.03 **Specification for insulation shall be as follows: -**

Insulation Material	Code	Thermal conductivity (w/m/^{o}C	Density Kg/m^3
Resin bonded glass wool	IS:8183	0.049 at 50°C	i) 24 (For Glass wool) ii) 48 (For Rockwool)

		0.043 at 50°C	iii) 48(For acoustic insulation)
Mineral wool pipe section. Min.Gr.2	IS:9842	0.043 at 50°C	144
Closed Cell Elastomeric Nitrile Rubber		0.036 at 20°C	40 – 60
Polyurethane Foam Polyisocyanurate Foam	IS12436	0.03 at 50 ^{o}C 0.03 at 50 ^{o}C	34 $\pm$ 2 34 $\pm$ 2
Note : Insulation used for HVAC application shall be CFC/HCFC free			

6.08.04 The specification for various finishes shall be as follows

a)	**Finish F-1 (with Resin Bonded Glass Wool/Resin Bonded Mineral Wool)**	
	Step-1	Wrapping of Poly-Bonded Hessain (PBH – to act as vapour seal) on outer surface of insulation with 50 mm overlap stitching and sealing of overlap with synthetic adhesive like CPRX or Equivalent compound.
	Step-2	The surface then shall be wrapped with 19 mm mesh 24 SWG GI wire netting, butting all the joints and laced down with 22 SWG lacing wire.
	Step-3	Sand cement (4:1) plaster shall be applied in two layers totalling to 12.5 mm thick, the second layer being brought to a smooth finish. A water proofing compound shall be added to the cement before its application.
aa)	**Finish F-1(a) (With Polyurethane Foam & Polyisocyanurate Foam)**	
		Wrapping of two layers of 7 mil 10 x 10 mesh glass cloth dipped in suitable adhesive such as SR 998 or Loid Bond 130 equivalent
b)	**Finish F-2**	
	Step-1	Insulation shall be covered with 500g polythene with 50mm overlap and sealing of overlap with synthetic adhesive like CPRX/ Loid Bond 83 or Equivalent compound.
	Step-2	Same as Step-2 of Finish F-1 above.

	Step-3 Same as Step-3 of Finish F-1 above.
c)	**Finish F-3** Step-1 Same as Step-1 of Finish F-2 above
	Step-2 The polythene shall be covered with 26 gauge Aluminium sheet and locking of joints with self-locking screws at a pitch of minimum 100 mm.
d)	**Finish F-4** Step-1 Same as Step-1 of Finish F-1 above. Step-2 Same as Step-2 of Finish F-1 above. Step-3 Same as Step-3 of Finish F-1 above. Step-4 Application of 3 mm thick coat of suitable water proofing compound and wrapped with fibre glass RP tissue followed by final coat of 3 mm thick water proofing compound over the RP tissue. Step-5 After the above treatment, 22G Aluminium sheet cladding, properly stiched at all joints shall be provided over the external surface.
dd)	**Finish F-4(a) (With FR Closed Cell Chemically Cross Linked Polyethylene)** Application of aluminium sheet 22G cladding to be provided over the XLPE insulating material. Cladding sheet is held in position with SDST screws @ 150 mm C/c over tongue-in-groove joints applied with a felt for sealing joint against water ingress. All sheet joints to be done in a manner to shed water.

6.08.05 For all inspection covers and hatches on equipment, pump casing, valve bodies and flanges (100 mm and above), insulation shall be applied so as to facilitate removal without minimum damage to the insulation by encasing the insulation in 24 gauge GI box or 22 gauge Aluminium sheet metal boxes which are bolted together around the equipment. However continuity of the vapour seal between the static and removable portions of the insulation is to be maintained.

6.08.06 **ACOUSTIC INSULATION**

a) All ducts up to a distance of 5 meters from AHU shall be acoustically lined from inside with 25 mm thick resin bonded glass wool of 48 Kg/Cu.M. density and 30 gauge perforated aluminium sheet having 5 mm dia perforation at 8 to 10 mm centre-to-centre distance. Insulation shall be fixed on wooden frame of 600 x 600 mm dimension.

b) Fibre glass tissue sheet shall be applied over the outer surface of insulation

before applying perforated aluminium sheet. Application of acoustic insulation shall be inline with the requirements specified above.

6.09.00 FRESH AIR FANS (Axial Fans)

a) These fans shall have fixed / variable pitch cast aluminum blades of aerofoil design.

b) The fan casing shall be of heavy gauge sheet steel construction.

c) Necessary rain protection cowl, inlet and outlet cones, bird protection screen, adjustable damper, vibration isolators, back draft dampers etc. shall be provided.

d) The speed of the fan shall not exceed 1000 rpm for fan with impeller diameter above 450 mm and 1500 rpm for fan with impeller diameter 450 mm or less. However for fans having static pressure of 30 mm WC or above the speed of the fan shall not exceed 1500 rpm for fan with impeller diameter of above 450 mm and 3000 rpm for fan with impeller diameter of 450 mm or less. The first critical speed of rotating assembly shall be atleast 25% above the operating speed.

e) All other accessories like supporting structure etc. as required shall be provided

7.00.00 PLANT CONTROL

7.01.00 Brief scheme of controlling the operation is described below. Detailed description of the control system for safe and efficient operation of the plant shall be elaborated, got approved from employer. The descriptions in the sub-sections of the control & instrument sections shall also be referred to

7.02.00 **Control Scheme for Air-Conditioning System**

7.02.01 All the functional requirements specified below and general control logic specified under this section shall be implemented in the respective control system.

7.02.02 The basic function of the system shall be to closely control and monitor temperature and humidity conditions inside the air-conditioned spaces, to optimize / minimize energy consumption by automated operation, to provide remote centralized monitoring & control for various mechanical facilities including sequential start/stop of the whole Air conditioning System, automatically calculate record and cooling load for each hour /day/season, to generate maintenance data & alarms, to maintain records of plant operation & energy consumption for varying loads, duty cycling to operate all the equipment including standby equipment for equal duration, automatic startup of standby equipment in case of failure of operating unit and displaying fault alarm status of the tripped unit, activating /deactivating water valves to startup/stop water flow through chiller/condenser circuit. For sequential operation /duty cycling, Programmed startup/stop of individual AHU as per operating requirements and inside room temperature and humidity of CR, CER, SWAS control room, UPS and Battery Charger room, static excitation room (as applicable) shall be maintained by controlling the chilled water flow by means of motor operated three way modulating valve at chilled water line, humidified system and duct heater.

7.02.03 Bidder shall provide Microprocessor/PLC based Control System along with Human Machine Interface System with two nos. Operator work station and one(1) no A-4 size color laser printer located at service building control room. For Service building, inside room temperature and humidity shall be maintained by varying the chilled water flow of secondary chilled water pumps through VFD driven motor and by varying the air flow of AHU through VFD driven motor, humidified system and duct heater. For sequential operation/duty cycling, programmed startup/stop of individual AHU's, pumps and cooling towers as per operating requirements and inside room temperature and humidity. Adequate no's of VAV box shall be provided for optimum use of VFD driven AH. Adequate no's of occupancy sensor and day light sensor shall be provided. CO2 sensor shall be provided in each AHU room to regulate the fresh air fan damper.

7.02.04 The operation of each Air Conditioning system shall be possible through Microprocessor based dedicated controllers to be provided by Contractor for each Screw /centrifugal Chiller

	units with local start / stop & indication for main plant A/C system in addition to Main DDCMIS based Control system of A/C plant (provided by contractor) for Main plant area, ESP control room and water system control room. Further these microprocessor based control panels of Chiller units shall be suitably interfaced with DDCMIS based Control panels.
7.03.00	**Water Chilling Plant Control**
7.03.01	Microprocessor based controls shall be provided as per manufacturer's standard practice along with facilities to interface with control system and to meet the requirement of all system operations and controls. Water chilling unit control system shall be designed to have a constant chilled water outlet temperature from evaporator at all load condition by means of controlling ON-OFF thermostat (one for each compressor). The closure of liquid line solenoid valve and tripping of compressor at lower water temperature and opening of solenoid valve and starting of compressor at high water temperature set point shall be automatic through the thermostat. Between the above set points the compressor capacity shall be controlled automatically through cylinder "load-unload" mechanism activated through the suction pressure or return chilled water temperature.
7.03.02	Water chilling unit shall be equipped with superheat control of water chilling unit through thermostatic expansion valve which gets its impulse from temperature element connected with suction line after chiller outlet.
7.03.03	High discharge pressure cut-out and oil pressure (OP) differential cut-out shall be of manual reset type and low pressure cut-out shall be automatic reset type. The OP cut-out shall trip the compressor in case of low oil pressure.
7.03.04	Facility toggle switch to close the liquid refrigerant line solenoid valve shall be provided to shut the compressor by the operation of low pressure cut-out (after the refrigerant has been pumped to the condenser).
7.03.05	Switching of Crank case heaters shall be interlocked with starting and stopping/tripping of compressor motor. Further, the safety thermostat shall switch off the crank-case heater in the event temperature rises above safe limit.
7.03.06	Provision shall also be made for the manual restarting of the compressor.
7.03.07	On-off type anti-freeze thermostats, one for each chiller shall be provided in addition to the controlling on-off thermostat for safety purpose and shall act in the event of failure of on-off thermostat to close the liquid line solenoid valve and also to simultaneously trip the compressor.
7.03.08	Compressor starting/running shall be interlocked with the low / adequate flow at the outlet of each chiller and each condenser and as well as with pressure in the inlet of the condensers. In addition, closure or open status of various valves shall be used for interlock, alarm and control of Air Conditioning System.
7.03.09	Condenser water pumps shall be interlocked with the low - level switch in each cooling tower sump and operation of cooling tower fans. High level in the cooling tower shall be annunciated in the panel by means of a separate level switch.
7.03.10	The standby condenser water pumps, standby chilled water pumps, standby fresh air fan & standby AHU shall be started automatically when the working equipments are stopped/

tripped. Auto/ Manual selecting and working/ standby selecting facility for the pumps/ AHU/ fresh air fan shall be provided.

7.03.11 Closure of fire dampers shall raise an alarm in the system.

7.03.12 There shall be provision for temperature and flow measurement in chilled water inlet and outlet line across AHUs to monitor the air conditioning load of each area.

7.03.13 Operation of air conditioning system shall be interlocked with the required minimum pressure and temperature of cooling tower at inlet to the condenser. Status indication of condenser water pumps and associated cooling towers shall be provided in the control panel of air conditioning plant.

7.04.00 **Air Handling Unit**

a) Inside room temperature and humidity shall be maintained by controlling the chilled water flow by means of motor operated three way modulating valve and by varying the flow by means of VFD driven AHU's which shall get its signal from the Control system for main plant A/C system. For Service building & Administrative building inside room temperature and humidity shall be controlled by varying the chilled water flow of secondary chilled water pumps through VFD driven motor and by varying the air flow of AHU through VFD driven motor.

b) Humidity sensor and gyserstat located in the return air duct shall actuate the PAN humidifier to obtain the desired degree of humidification.

c) Humidity and temp. sensor shall be provided and interlocked in steps with winter heater / re-heater / strip heaters for monsoon and winter re-heating or heating as the case may be.

d) Heater banks shall be interlocked with the running of AHU, temperature of return air, humidity of return air and safety thermostat (airstat - located in front of the each heater in the supply air duct)

e) AHU shall be started either locally or from the main control room of AC system by means of Remote / Manual selection facility.

f) The closure of fire dampers, automatic tripping of AHU fans and fresh air fans shall be interlocked with Fire Detection System.

g) Each AHU shall be provided with temperature indicators and pressure transmitter in the chilled water piping inlet and outlet to monitor the air-conditioning load of each area.

7.05.00 **D-X Air-Conditioning System** BIDDER SHALL FOLLOW THIS CLAUSE STRICTLY

a) The control and interlocks described above for water chilling plants are applicable for this system also.

b) Further the compressor starting/running shall be interlocked with the flow switches in condenser water circuit and as well as with AHU motors.

c) The standby condenser water pumps, fresh air fan & standby AHU shall be started automatically when the working equipments are stopped / tripped. Auto/ Manual selector Switches and working / standby selector switches for the pumps, fresh air fans and AHU shall be provided in the panel.

7.06.00 **Cassette /Hi-wall Split Air Conditioners**

Control and interlocks for these type of units shall be as per manufacturer's standard practice.

7.07.00 **Miscellaneous Control Requirements**

a) Separate emergency local stop push button shall be provided for each pump, compressor, fans etc. of A/C system.

b) Status shall be provided of each pump, compressor, fans etc. of AC system and Ventilation system on HMI system at control room.

c) All the annunciations related to failure of equipments, tripping of equipments,

source of failure / reason due to which the equipment is stopped / tripped, low & high limits of parameters such as level, temperature, pressure drop, pressure etc shall be provided for each pump, fan, compressor, AHU, PAC, AWU etc..

d) The fans (both supply and exhaust fans) associated with mechanical ventilation system shall be operated locally.

e) Relative humidity and temperature measurement of all control rooms and CERs, ESP control room, FGD control room and all major air-conditioned areas shall be available in DDCMIS. Relative humidity and temp. measurement for main plant control room and CERs to be available in multiple numbers.

8.00.00 PAINTING:

8.01.00 All the Equipments shall be protected against external corrosion by providing suitable painting.

8.02.00 The surfaces of stainless steel, Galvanized steel, Gunmetal, brass, bronze and non-metallic components shall not be applied with any painting. The Contractor shall clean the external surfaces and internal surfaces before Erection by wire brushing and air blowing. The steel surface to be applied with painting shall be thoroughly cleaned before applying painting by brushing, shot blasting, etc. as per the agreed procedure.

8.03.00 For all the steel surfaces (external) exposed to atmosphere (outdoor installation), one(1) coat of red oxide primer of thickness 30 to 35 microns followed up with three (3) coats of synthetic enamel paint, with 25 microns as thickness of each coat, shall be applied. For plant at coastal area, epoxy resin based zinc phosphate primer followed by epoxy resin based paint pigmented with titanium di-oxide shall be used in place of enamel paints.

8.04.00 For all the steel surfaces inside the building (indoor installation), One (1) Coat of red oxide primer of thickness 30 to 35 microns followed up with two (2) coats synthetic enamel paint, with 25 microns as thickness of each coat shall be applied. For plant at coastal area, epoxy resin based zinc phosphate primer followed by epoxy resin based paint pigmented with titanium di-oxide shall be used in place of enamel paints.

8.05.00 For centrifugal fans - Casing shall have hot dip/ spray galvanization (**minimum** 60 micron DFT).

9.00.00	**CODES & STANDARDS**
9.01.00	The design, manufacture and performance of equipment shall comply with all currently applicable statues, regulations and safety codes in the locality where the equipments are to be installed. Nothing in this specification shall be considered to relieve the bidder of this responsibility.
9.02.00	Unless otherwise specified, equipment shall conform to the latest applicable Indian or IEC standard. Equipment complying with other authoritative standards such as British, USA, ASHRAE etc. will also be considered if it ensures performance equivalent or superior to Indian Standard.

Annexure –I

GENERAL SPECIFICATION FOR HORIZONTAL PUMPS

1) **SCOPE**

This specification covers the design, material, construction features, manufacture, inspection, testing the performance at the Vendor's/Sub-Vendor's Works and delivery to site of Horizontal Centrifugal Pumps.

2) **CODES AND STANDARDS**

The design, material, construction, manufacture inspection and performance testing of Horizontal Centrifugal Pumps shall comply with all currently applicable statutes, regulations and safety codes in the locality where the Equipment will be installed. Nothing in these specifications shall be construed to relieve the Vendor of this responsibility. The Equipment supplied shall comply with the latest applicable Indian Standards listed below. Other National Standards are acceptable, if they are established to be equal or superior to the Indian Standards.

3) List of Applicable Standards.

IS : 1520 : Horizontal Centrifugal Pumps for clear cold fresh water

IS : 5120 : Technical requirements of roto dynamic special purpose pumps

API : 610 : Centrifugal pumps for general refinery service.

IS : 5639 : Pumps Handling Chemicals & corrosion liquids

IS : 5659 : Pumps for process water

HIS : Hydraulic Institute Standards, USA

ASTM-1-165-65 Standards Methods for Liquid Penetration Inspection.

In case of any contradiction with aforesaid standards and the stipulations as per the technical specifications as specified hereinafter the stipulations of the technical specifications shall prevail.

4) **DESIGN REQUIREMENTS**

a) The Pump shall be capable of developing the required total head at rated capacity for continuous operation. Also the pumps shall be capable of being operated to give satisfactory performance at any point on the HQ characteristics curve. The operating range of the pump shall be 40% to 120% of the duty point unless otherwise mentioned elsewhere. The maximum efficiency of pump shall preferably be within ± 10% of the rated design flow as indicated in data sheets.

b) The total head capacity curve shall be continuously rising from the operating point towards shut-off without any zone of instability and with a minimum shut-off head of about 15% more than the design head.

Annexure –I

c) Pumps of a particular category shall be identical and shall be suitable for parallel operation with equal load division. The head Vs capacity and BHP Vs capacity characteristics should match to ensure even load sharing and trouble free operation throughout the range. Components of identical pumps shall be interchangeable.

d) Pumps shall run smoothly without undue noise and vibration. Peak to peak vibration limits shall be restricted to the following values during operation:

Speed	Antifriction Bearing	Sleeve Bearing
1500 rpm and below	75.0 micron	75.0 micron
3000 rpm	50.0 micron	65.0 micron

The noise level shall not exceed 85 dBA overall sound pressure level reference 0.0002 microbar (the standard pressure reference for air sound measurement) at a distance of 1 M from the equipment surface.

e) The pumps shall be capable of starting with discharge valve fully open and close condition. Motors shall be selected to suit to the above requirements. Continuous Motor rating (at 50 deg.C ambient) shall be atleast ten percent (10%) above the maximum load demand of the pump in the entire operating range to take care of the system frequency variation and no case less than the maximum power requirement at any condition of the entire characteristic curve of the pump.

f) The kW rating of the drive unit shall be based on continuously driving the connected equipment for the conditions specified. However, in cases where parallel operation of the pumps are specified, the actual motor rating is to be selected by the Bidder considering overloading of the pumps in the event of tripping of operating pump(s).

g) Pumps shall be so designed that pump impellers and other accessories of the pumps are not damaged due to flow reversal.

h) The Contractor under this specification shall assume full responsibility in the operation of pump and motor as a unit.

5) **DESIGN CONSTRUCTION**

a) Design and construction of various components of the pumps shall conform to the following general specifications. For material of construction of the components, data sheets shall be referred to.

b) **Pump Casing**

Pump casing shall have axially or radially split type construction as specified. The casing shall be designed to withstand the maximum shut-off pressure developed by the pump at the pumping temperature.

Pump casing shall be provided with a vent connection and piping with fittings & valves. Casing drain as required shall be provided complete with drain valves, piping and plugs. It shall be provided with a connection for suction and discharge pressure gauge as standard feature. It shall be structurally sound to provide housing for the pump assembly and shall be designed hydraulically to minimum radial load at part load operation.

Annexure –I

c) **Impeller**

Impeller shall be closed, semi-closed or open type as specified elsewhere and designed in conformance with the detailed analysis of the liquid being handled.

The impeller shall be secured to the shaft, and shall be retained against circumferential movement by keying, pinning or lock rings. On pumps with overhung shaft, impellers shall be secured to the shaft by a lockout or cap screw which tightness in the direction of normal rotation.

d) **Impeller/Casing Wearing Rings**

Replaceable type wearing rings shall be provided at suitable locations of pumps. Suitable method of locking the wearing ring shall be used. Wearing rings shall be provided in pump casing and/or impeller as per manufacturer's standard practice.

e) **Shaft**

The critical speed shall be well away from the operating speed and in no case less than 130% of the rated speed.

The shaft shall be ground and polished to final dimensions and shall be adequately sized to withstand all stresses from rotor weight, hydraulic loads, vibration and torques coming in during operation.

f) **Shaft Sleeves**

Renewable type fine finished shaft sleeves shall be provided at the stuffing boxes/mechanical seals. Length of the shaft sleeves must extend beyond the outer faces of gland packing of seal end plates so as to distinguish between the leakage between shaft and shaft sleeve and that past the seals/gland.

Shaft sleeves shall be fastened to the shaft to prevent any leakage or loosening. Shaft and shaft sleeve assembly should ensure concentric rotation.

g) **Bearings**

Heavy duty bearings, adequately designed for the type of service specified in the enclosed pump data sheet and for long, trouble free operation shall be furnished.

The bearings offered shall be capable of taking both the radial and axial thrust coming into play during operation. In case, sleeve bearings are offered additional thrust bearings shall be provided. Antifriction bearings of standard type, if provided, shall be selected for a minimum life 20,000 hrs. of continuous operation at maximum axial and radial loads and rated speed.

Proper lubricating arrangement for the bearings shall be provided. The design shall be such that the bearing lubricating element does not contaminate the liquid pumped. Where there is a possibility of liquid entering the bearings suitable arrangement in the form of deflectors or any other suitable arrangement must be provided ahead of bearings assembly.

Bearings shall be easily accessible without disturbing the pump assembly. A drain plug shall be provided at the bottom of each bearings housing.

Annexure –I

h) **Stuffing Boxes**

Stuffing box design should permit replacement of packing without removing any part other than the gland.

Stuffing boxes of packed ring construction type shall be provided wherever specified. Packed ring stuffing boxes shall be properly lubricated and sealed as per service requirements and manufacturer's standards. If external gland sealing is required, it shall be done from the pump discharge. The Bidder shall provide the necessary piping valves, fittings etc. for the gland sealing connection.

i) **Mechanical Seals**

Wherever specified in pump data sheet, mechanical seals shall be provided. Unless otherwise recommended by the tenderer, mechanical seals shall be of single type with either sliding gasket or bellows between the axially moving face and shaft sleeves or any other suitable type. The sealing faces should be highly lapped surfaces of materials known for their low frictional coefficient and resistance to corrosion against the liquid being pumped.

j) The pump supplier shall coordinate with the seal maker in establishing the seal chamber of circulation rate for maintaining a stable film at the seal face. The seal piping system shall form an integral part of the pump assembly. For the seals under vacuum service, the seal design must ensure sealing against atmospheric pressure even when the pumps are not operating. Necessary provision for seal water supply along with complete piping fittings and valves as required shall form integral part of pump supply.

k) **Pump Shaft Motor Shaft Coupling**

The pump and motor shafts shall be connected with an adequately sized flexible coupling of proven design with a spacer to facilitate dismantling of the pump without disturbing the motor. Necessary coupling guards shall also be provided.

l) **Base Plate**

A common base plate mounting both for the pump and motor shall be furnished. The base plate shall be fabricated steel and of rigid construction, suitably ribbed and reinforced. Base plate and pump supports shall be so constructed and the piping unit so mounted as to minimise misalignment caused by mechanical forces such as normal piping strain, internal differential thermal expansion and hydraulic piping thrust. Suitable drain troughs and drip lip shall be provided.

m) **Assembly and Dismantling**

Assembly and dismantling of each pump with drive motor shall be possible without disturbing the grouting base plate or alignment.

n) **Drive Motor (Prime Mover)**

The kW rating of the drive shall be based on continuously driving the connected equipment for the conditions specified. However, in cases where parallel operation of the pumps are specified, the actual motor rating is to be selected by the Bidder considering overloading of the pumps in the event of tripping of operating pump(s).

ANNEXURE-II

PIPING THICKNESS: Pipes for sizes 200 NB & above shall confirm to IS: 3589 Grade 410. The final thickness shall not be less then that specified as per IS: 3589 as indicated below.

Nominal pipe Size (mm)	Outside Diameter (mm)	Wall Thickness (mm)
200 NB	219.1	4.5
250 NB	273	5
300 NB	323.9	5.6
350 NB	355.6	5.6
400 NB	406.4	6.3
450 NB	457	6.3
500 NB	508	6.3
600 NB	610	6.3

SUB–SECTION – B-06

LT SWITCHGEARS & LT BUSDUCTS

1.00.00 **DESIGN PHILOSOPHY / PRACTICE FOR LV BOARD SIZING**

The sizing of LV boards shall be dependent on conditions such as total load connected to a board, diversity factors for various loads connected, Fault Level and Voltage Regulation Considerations, etc.

As far as practicable the system shall provide segregated supplies to main and standby auxiliaries so that the failure of supply to main auxiliary shall in no way jeopardize the standby auxiliary feed. Automatic changeover at critical switchgear / MCC sections shall be provided as necessary to prevent the loss of a unit or to ensure the equipment safety.

1.01.00 **Design Considerations:**

1.01.01 **Sizing of LT boards**

a) Input kVA for a Drive = (Rating in kW X Load Factor) / (Efficiency X Power Factor) where values of load factor , power factor and efficiency are defined below:

Load (service) factor for 415 V loads is taken as 0.85

Power factor 415 V Uni-Directional drives is taken as 0.8 and efficiency as 0.85

Power factor of 415 V bidirectional drive loads is taken as 0.65 and efficiency as 0.8 for motor rating less than 15 kW. For motor ratings of 15 kW and above the corresponding values are 0.75 and 0.8.

b) The Finally selected Busbar ratings for Switchboards, MCCs, ACDBs and Busducts shall include a 10% margin over the calculated values.

c) Lighting load of 100 kVA shall be considered on each section of main switchgears with incomer from transformer as indicated in the tender SLD.

d) A spare capacity of about 10 % shall be kept for addition of loads during detail engineering as many of the LT loads cannot be predicted during the Rating selection of the Board.

e) Busbar Ratings of Valve / Damper ACDBs shall be derived by addition of 5% of the total kVA load connected and the rating of the largest Valve / Damper connected.

f) Welding sockets shall be connected from Welding DBs, which shall be fed through 1X100% Welding transformers.

g) ESP consumption for 100% BMCR operation shall be considered and further this load shall be uniformly divided among ESP Switchgears.

1.01.02 **Sizing of Offsite Boards**

a) The loads for mechanical auxiliary systems shall be met by auxiliary transformers based on the criteria that each switchgear/MCC/Distribution board shall be fed either by 2x100% or 3x50% transformers/feeders and, these shall be rated to carry the maximum load expected to be imposed. Each of the above boards shall be sectionalized.

b) The sizing of Unit Emergency boards shall be in according to the DG rating. The Emergency board shall have tie to both sections of Unit Service Switchgear for catering unit loads in Blackout Conditions.

c) For Main Plant (TG & SG areas) and Service Building, each Lighting DB shall have 1X100% transformer. For all other offsite areas, each Lighting DB shall have 2X100% transformers.

1.02.00 **Layout Criteria**

The switchboards can be split into two sections based on layout constraints in case of long switchboards to optimize Switchgear room layouts. The two sections of the split shall be connected by Busduct / Cable as per layout requirements.

1.03.00 **Spare capacity and Future Requirements**

Each of the LV switchboards shall be designed for 1.1 times the required rating as a spare capacity. Further all LV Switchboard shall be provided with spare feeders / modules as specified in relevant clause of Part-A of Technical Specification.

1.04.00 **Standardization**

It shall be preferred to have all LV Switchboards for the entire plant from One / Two manufacturer(s) from maintainability and spares management point of view.

It shall be preferred to follow a standardization of Terminal Numbers across all LV Modules for ease of Interconnection and maintenance.

1.05.00 **Plant control cable Interconnections**

Control cable interconnections between switchgears and transformer marshalling boxes, switchgears and motor terminal boxes / push button stations, and between various switchgears shall be in the contractor's scope.

(a) Standard control cable sizes shall preferably be 3CX1.5, 5CX1.5, 7CX1.5 & 10CX1.5 mm^2

(b) Cable size for motor space heater application shall be 2CX2.5 mm^2

(c) Interconnections for Current Transformer terminals shall use two cores of 1.5mm^2 size per phase

(d) Core identification shall be using core colour for up to 5-core cable and core number for cable with more cores

(e) Separate control cables shall be used for current transformers

(f) At least one spare core shall be made available in each of the control cable

2.00.00 CODES AND STANDARDS

2.01.00 All equipment shall, generally, comply with the updated issues of

(a.) Applicable Indian Standards

(b.) Indian Electricity Act.

(c.) Indian electricity rules

2.02.00 Equipment complying with any other authoritative / internationally recognized standards such as IEC, British, U.S.A., German, etc. will also be considered if it ensures performance equivalent or superior to Indian Standards. In such cases the contractor shall clearly indicate the standard adopted and furnish the copy of latest English version of the same along with the bid and bring out the salient features for comparison.

2.03.00 All standards, specifications and codes of practice referred to herein shall be the latest editions including all applicable official amendments and revisions as published one month prior to the date of opening of bids. In case of conflict between this specification and those (IS codes, Standards etc.) referred to herein, the former shall prevail. All work shall be carried out as per the following codes and standards.

IS: 5	Colours for ready-mixed paints and enamels.
IS: 694	PVC insulated cables for working voltages up to and including 1100V.
IS: 722	A.C. Electricity Meters
IS: 1248	Electrical Indicating instruments
IS/IEC: 60947–1	Degree of protection provided by enclosures for low voltage Switchgear and Control gear
IS/IEC: 60947-2	A.C. circuit Breakers
IS: 2551	Danger Notice Plates
IS: 2629	Hot dip galvanising
IS: 2705	Current Transformers
IS/IEC: IEC-60947-4-1	Contactors and motors starter for voltages not exceeding 1000 V AC or 1200 V DC
IS: 3043	Code of practice for earthing.
IS: 3072	Code of practice for installation and maintenance of Switchgear
IS: 3156	Voltage Transformers
IS: 3202	Code of practice for climate proofing of electrical equipment.
IS: 3231	Electrical relays for power system protection.
IS/IEC 60947	Air-Break Switches, air break disconnectors, air break disconnector and fuse combination units for voltages not exceeding 1000V AC or 1200 V DC.
IS/IEC 60947-1 / IEC-60947-1	General Requirements for Switchgear and Control gear for voltages not exceeding 1000 V.
IS: 5082	Wrought Aluminium and Aluminium alloys for electrical purposes.
IS: 6005	Code of practice of phosphating of iron and steel.
IS/IEC 60947-5-1 / IEC-60947-5-1	LV switchgear and Control gear Control current devices and switching element.
IS: 8623 (3 parts) / IEC: 60439	Specification for factory built assemblies of Switchgear & Control gear for voltages up to and including 1000 V AC & 1200 V DC.
IS: 8686	Static Relays

IS: 13703 / IEC: 60269	HRC Cartridge fuses
IS: 10118 (4 parts)	Code of practice for selection, installation and maintenance of switchgear and control gear.
IS: 11171	Specification for dry type transformers.
IEC: 60255	Electrical Relays
IEC: 61850	Communication networks and systems in substations
IS: 11353	Guide for uniform system of marking and identification of conductors and apparatus terminals
IS: 12021	Specification of control transformers for switchgear and Control gear for voltage not exceeding 1000V AC.
IEC: 60947-7-1	Terminal blocks for Copper conductors
IS :513 (2008)	Cold Rolled Low Carbon Steel Sheets and Strips

3.00.00 TECHNICAL PARAMETERS

3.01.00 **Power Supply**

3.01.01 AC SYSTEM

1)	Voltage	415 V ± 10%,3 Phase, 4 wire, solidly earthed
2)	Frequency	50 Hz +/- 5%
3)	Combined variation (in volts & frequency)	10% absolute sum
4)	Fault Level	50 kA(RMS)

3.01.02 DC SYSTEM

1)	System Voltage	240 V DC 2-Wire, Unearthed
2)	Fault Level	20 kA

3.01.03 CONTROL SUPPLY VOLTAGE

1)	Trip & closing coil of circuit breaker	240 V DC/120 V DC
2)	Spring charging motor	240 V DC/120 V DC
3)	MCC control supply	110 V AC Neutral solidly earthed

	4) Space heater & lighting	240 V AC Neutral solidly earthed
3.02.00	**CUBICLE DATA**	
	Busbar Rating	
	1) Continuous Current rating	As per requirement
	2) Short time rating where	
	a) CB is used as incomer	50 kA(RMS) for one sec
	b) Fuse protection is used in Incomer	Prospective current of 50 kA(RMS) for the fuse clearing time
	3) Dynamic Rating where	
	a) CB is used as incomer	105 kA(PEAK)
	b) Fuse Protection is used in incomer	Prospective current of 105 kA (PEAK) as limited by fuse
	4) Busbar insulation	
	a) For switchgear	PVC Sleeve insulated
	b) For MCC	PVC Sleeve insulated
	c) ACDB	PVC Sleeve insulated
	d) DCDB	PVC Sleeve insulated
	e) For fuse boards	PVC Sleeve insulated/ epoxy coated
3.03.00	**CIRCUIT BREAKER**	
	1) Type	Air break spring charged stored energy type
	2) Operating duty	O-3 min-CO-3 min-CO
	3) Symmetrical interrupting	50 kA(RMS)
	4) Short circuit rating	105 kA(PEAK)
	5) Short Circuit Breaking current	
	a) AC Component	50 kA(RMS)
	b) DC Component	As per IS/IEC 60947
	6) Short time withstand	50 kA(RMS) for 1 s
	7) No of aux. contacts	4 NO + 4 NC for DDCMIS interface

3.04.00	**METERS**	
	1) Accuracy class	2.0
	2) One min. power frequency withstand test voltage	2.0 kV (rms)
3.05.00	**Current Transformers**	
	1) Type	Cast Resin Bar Primary / Nylon Casing
	2) Voltage class and frequency	650 V, 50 HZ
	3) Class of insulation	E or better
	4) Rated Secondary Current	1 A
	5) Accuracy class & burden	
	a) For protection	5P20, 5VA
		PS Class for REF
	b) For metering	class 1.0, 5VA (min)
		class 0.2s, 5VA (min) for feeders indicated in SLD ,if any
	6) Instrument Security Factor (ISF) for metering CT	5
	7) Short time withstand	
	a) For CT Associated with circuit breaker	50 kA(RMS) for 1 sec
	b) For CT Associated with fuse protected feeders	Prospective current of 50 kA(RMS) for the Fuse clearing time
	8) Dynamic withstand	
	a) For CTs Associated with circuit breaker	105 kA(PEAK)
	b) For CT Associated with fuse protected feeders	Prospective current of 105 kA(PEAK) as Limited by fuse
3.06.00	**BUSDUCT**	
	1) Type	Non-Segregated
	2) One minute power frequency withstand voltage	2.5 kV
	3) One second short ckt withstand current	50 kA(RMS)

	4)	Momentary dynamic current withstand	105 kA(PEAK)

BUSDUCT (SANDWICH TYPE)

	1)	Type	Bus Trunking
	2)	Rated Insulation voltage	1000V
	3)	One second short ckt withstand current	50KA(RMS)
	4)	Momentary dynamic current withstand	105KA(PEAK)
	5)	Power frequency withstand voltage	3.5kv
	6)	Impulse withstand voltage	8kV
	7)	Insulation	Class F

3.07.00 **VOLTAGE TRANSFORMERS**

	1)	Type	Cast Resin
	2)	Voltage Ratio	415 / 110 V for line PT 415/√3 / 110/√3 V for Bus PT
	3)	Method of Construction	V-V
	4)	Accuracy Class	0.5 0.2 for feeders indicated in SLD ,if any
	5)	Rated Voltage factor	1.1continuous, 1.5 for 30 sec.
	6)	Class of insulation	E or better
	7)	One minute power frequency withstand voltage	2.5 KV

3.08.00 **HRC FUSES**

	1)	Voltage Class	650 Volts
	2)	Rupturing capacity	80 kA (rms) for AC ckt. 20 kA for DC ckt.

3.09.00	**CONTACTORS**		
	1)	Type	Air break electro magnetic
	2)	Utilising Category	AC3 of IS/IEC 60947 for non reversible AC4 of IS/IEC 60947 for reversible drives
3.10.00	**Relays**		
	1)	Power frequency withstand voltage	2.5 kV for 1 sec. or 2.0 kV for 1 min.
3.11.00	**CONTROL TRANSFORMERS**		
	1)	Type	Dry / Cast Resin
	2)	Voltage Ratio	415 / 110 with taps ± 5% in steps of 2.5%
	3)	Class of insulation	Class-B or better
	4)	One minute power frequency withstand voltage	2.5 kV
	5)	Rating	1.5 X Adequate for application.
3.12.00	**LIGHTING TRANSFORMER / WELDING TRANSFORMER**		
	1)	Type & Rating	Dry type / 100 KVA
	2)	Voltage Ratio	415/415V, +/- 5% taps in steps of 2.5%
	3)	Class of insulation	B or better
	4)	One minute power frequency withstand voltage	2.5 KV
	5)	Enclosure protection	IP-42
3.13.00	**TRANSDUCERS**		
	1)	Current transducers	
	a)	Input	0-1 A (CT secondary)
	b)	Rated frequency	50 Hz

c) Output — 4-20 mA (2 Nos. decoupled)

d) Over current — Transducer for motor current ammeters shall be capable of withstanding min. 6 times CT sec. current of 1A for a min period of 30 seconds

e) Accuracy — 1.0

2) Voltage Transducers

a) Input — 110 V / 415 V / 240 V, 50 Hz (for AC) / 220 V / 110 V DC (for DC)

b) Output — 4-20 mA (2 Nos. decoupled)

c) Accuracy — 1.0

3.14.00 **MCCB**

1)	Rated voltage	415V
2)	Rated insulation level	690V
3)	Rated ultimate &Service S.C. breaking capacity	50 kA
4)	Rated making capacity	105 kA
5)	Utilization category	A

4.00.00 CONSTRUCTIONAL DETAILS OF SWITCHBOARDS

4.01.00 All Switchboards i.e., 415 V Switchgears, Motor Control Centres (MCCs), AC Distribution Boards (ACDBs), 220 V DC Distribution Boards (DCDBs) and Solenoid Valve Distribution Boards, shall be of metal enclosed, indoor, floor-mounted, free-standing type.

4.02.00 All switchboard frames and load bearing members shall be fabricated using suitable mild steel structural sections or pressed and shaped cold-rolled sheet steel of thickness 2.0 mm. Frames shall be enclosed in cold-rolled sheet steel of thickness 1.6 mm. Doors and covers shall also be of cold rolled sheet steel of thickness 1.6 mm. Stiffeners shall be provided wherever necessary. The gland plate thickness shall be 3.0 mm for hot / cold-rolled sheet steel and 4.0 mm for non-magnetic material.

4.03.00 All panel edges and cover / door edges shall be reinforced against distortion by rolling, bending or by the addition of welded reinforcement members. The top covers of the panels should be designed such that they do not permanently bulge/ bend by the weight of maintenance personnel working on it.

4.04.00 The switchboards shall be of bolted design. The complete structures shall be rigid, self-supporting, and free from flaws, twists and bends. All cut-outs shall be true in shape and devoid of sharp edges.

4.05.00 All switchboards shall be of dust-proof and vermin-proof construction and shall be provided with a degree of protection of IP: 5X as per IS/IEC 60947. However, the busbar chambers having a degree of protection of IP: 42 are also acceptable where continuous busbar rating is 1600A and above. Provision shall be made in all compartments for providing IP: 5X degree of protection, when circuit - breaker or module trolley has been removed. All cut-outs shall be provided with EPDM / Neoprene gaskets.

4.06.00 Provision of louvers on switchboards would not be preferred. However, louvers backed with metal screen are acceptable on the busbar chambers where continuous busbar rating is 1600 A and above.

4.07.00 The enclosure for outdoor oil filtration panels shall be constructed of stainless steel sheets in order to have protection against corrosion. The Degree of protection for outdoor panels shall be IP: 55. The panels shall be mounted on a pedestal at a height of 500mm from ground level.

4.08.00 All switchboards shall be of uniform height not exceeding 2450 mm.

4.09.00 Switchboards shall be easily extendable on both sides by the addition of vertical sections after removing the end covers.

4.10.00 Switchboards shall be supplied with base frames made of structural steel sections, along with all necessary mounting hardware required for welding down the base frame to the foundation / steel insert plates. The base frame height shall be such that floor finishing (50 mm thick) to be done by Contractor after erection of the switchboards does not obstruct the movement of doors, covers, withdrawable modules etc.

4.11.00 All switchboards shall be divided into distinct vertical sections (panels), each comprising of the following compartments:

(a.) BUSBAR COMPARTMENT

A completely enclosed bus bar compartment shall be provided for the horizontal and vertical bus bars. Bolted covers shall be provided for access to horizontal and vertical busbars and all joints for repair and maintenance, which shall be feasible without disturbing any feeder compartment. Auxiliary and power bus bars shall be in separate compartments.

(b.) SWITCHGEAR / FEEDER COMPARTMENT

All equipment associated with an incomer or outgoing feeder shall be housed in a separate compartment of the vertical section. Two-tier breaker arrangement in a vertical section shall be offered for outgoing breaker feeders of rating up to 1600A. The design of the vertical section for such an arrangement shall ensure ease of termination of power cables of size & quantity appropriate to respective feeder rating. The compartment shall be sheet steel enclosed on all sides with the withdrawable units in position or removed. Insulating sheet at rear of the compartment is also acceptable. The front of the compartment shall be provided with the hinged single leaf door with captive screws for positive closure.

(c.) CABLE COMPARTMENT OR CABLE ALLEY

A full-height vertical cable alley of minimum 250 mm width shall be provided for power and control cables. Cable alley shall have no exposed live parts and shall have no communication with busbar compartment. Cable terminations located in cable alley shall be designed to meet the Form 4b as per IEC 61439 for safety purpose. Necessary grommets shall be provided at the cable entry of individual modules. Wherever cable alleys are not provided for distribution boards, segregated cable boxes for individual feeders shall be provided at the rear for direct termination of cables. For circuit breaker external cable connections, a separately enclosed cable compartment shall also be acceptable. The contractor shall furnish suitable plugs to cover the cable openings in the partition between feeder compartment and cable alley. Cable alley door shall be hinged.

(d.) CONTROL COMPARTMENT

A separate compartment shall be provided for relays and other control devices associated with a circuit breaker.

4.12.00	Sheet steel barriers shall be provided between two adjacent vertical panels running to the full height of the switchboard, except for the horizontal busbar compartment. EPDM / Neoprene gasket shall be provided between the panel sections to avoid ingress of dust into panels.
4.13.00	After isolation of power and control circuit connections it shall be possible to safely carryout maintenance in a compartment with the busbar and adjacent circuit live. Necessary shrouding arrangement shall be provided for this purpose. Wherever two breaker compartments are provided in the same vertical section insulating barriers and shrouds shall be provided in the rear cable compartment to avoid accidental touch with the live parts of one circuit when working on the other circuit.
4.14.00	All 415V switchgear (circuit-breaker) panels shall be of single-front type. MCCs and DBs shall be of single-front / double-front construction as per the requirements. All single-front switch boards shall be provided with single-leaf, hinged or bolted covers at the rear. The bolts shall be of captive type. The covers shall be provided with "DANGER" labels. All panel doors shall open by 90 deg or more. In case of double-front MCCs, if this cannot be achieved for panels adjacent to a breaker panel, suitable dummy panel shall be provided by the Contractor wherever necessary.
4.15.00	All ACDBs, DCDBs and Solenoid Valve DBs shall be of fixed module type. All 415V circuit-breaker modules and contactor controlled motor modules shall be of fully draw-out type having distinct 'Service' and 'Test' positions. The equipment pertaining to a draw-out type incomer or feeder module shall be mounted on a fully withdrawable chassis which can be drawn out without having to unscrew any wire or cable connection. Suitable arrangement with cradle/ rollers, guides along with tool/lever operated racking in/out mechanism shall be provided for smooth and effortless movement of the chassis. For modules of size more than half the panel height, double guides shall be provided for smooth removal or insertion of module. All identical module chassis of same size shall be fully interchangeable without having to carry out any modifications. Suitable interlock shall be provided in DCDB for prevention of opening of Isolator (Incomer) when the bus coupler is open and vice-versa.
4.16.00	All draw-out modules shall be provided with “Closed door operation” feature wherein movement of the module from “Isolated” position to “Service” position & vice-versa and power ON / OFF operation of the module shall be possible only with the module door closed condition.
4.17.00	All disconnecting contacts for power and control circuits of draw-out modules shall be of robust and proven design, fully self-aligning and spring-loaded. Both fixed and moving contacts shall be silver-plated and replaceable. The spring-loaded power and control draw-out contacts shall be on withdrawable chassis and the same on fixed portion shall not be accepted.
4.18.00	Individual opening in the vertical bus enclosure shall permit the entry of moving contacts from the draw-out modules into vertical droppers.
4.19.00	As indicated in schematic drawings of DDCMIS controlled modules, contractor shall supply & mount two (2) coupling relays in the corresponding modules.
4.20.00	All equipment and components shall be neatly arranged and shall be easily accessible for operation and maintenance. The internal layout of all modules shall be subject to Employer's approval. The Contractor shall submit dimensional drawings showing complete internal details of busbars and module components, for each type and rating for approval of Employer.
4.21.00	Employer reserves the right to alter the cable entries, if required during detailed engineering, without any additional commercial implication.
4.22.00	Each switchboard shall be provided with undrilled, removable type gland plate, which shall cover the entire cable alley. Contractor shall ensure that sufficient cable glanding space is

available for all the cables coming in a particular section through gland plate. For all single core cables, gland plate shall be of non-magnetic material. The gland plate shall preferably be provided in two distinct parts for the easy of terminating addition cables in future. The gland plate shall be provided with gasket to ensure enclosure protection. Recommended drilling chart of gland plates for all power and control cables in the vertical panels shall be indicated by the Contractor in the respective G.A. drawings of the boards.

4.23.00 The Contractor shall consider layout of panels in a switchboard consisting of various feeder modules in a straight line, unless specified otherwise. The actual composition and disposition of various modules in a switchboard shall be finalised during detailed engineering. The Contractor shall provide adopter panel / dummy panel required to meet various configuration / arrangement of busbars adopted by the Contractor. The Switchboards fed from indoor transformer will be flange connected to the same and the same shall be located as close as desirable to the transformer. The details of transformer flanges for those transformers not being supplied under this package shall be given to the contractor for matching the connections. The switchboards fed from outdoor transformers of rating 1000kVA and above shall be connected through busducts. For transformers of 1000kVA rating, cable connection may also be acceptable in case of layout constraints. For lower rated transformers, the connection shall be through cables. Busduct connections wherever applicable shall be preferably in a straight line alignment. Adopter panels and dummy panels shall be provided wherever required.

4.24.00 Adequate space in a separate compartment shall be identified for mounting of Ethernet Switch (19” rack mounting), in all switchgears having numerical relays. Further, mounting of Ethernet switch in the above compartment at site and provision of inter-panel wiring (Cat5e Ethernet / Fibre Optic) for connection of numerical relays to Ethernet switch shall be in the contractor’s scope. Arrangement to provide required control supply (110 V / 220 V DC) to Ethernet switch shall be made in the switchgear.

4.25.00 CLEARANCES

The minimum clearance in air between phases and between phases and earth for the entire run of horizontal and vertical busbars and bus-link connections at circuit-breaker shall be 25 mm. For all other components, the clearance between "two live parts", "a live part and an earthed part", shall be at least ten (10) mm throughout. Wherever it is not possible to maintain these clearances, insulation shall be provided by sleeving or barriers. However, for horizontal and vertical busbars the clearances specified above should be maintained even when the busbars are sleeved or insulated. All connections from the busbars up to switch / fuses shall be fully shrouded / insulated and securely bolted to minimize the risk of phase to phase and phase to earth short circuits.

5.00.00 PROTOTYPE PANELS

In order to establish the compliance with the requirements of this technical specification, prototype panels shall be made and offered for the Employer’s inspection and approval before the start of manufacturing of panels for this project. The exact configuration of such prototype panels shall be finalized during detailed engineering.

6.00.00 CONSTRUCTIONAL DETAILS OF AC & DC FUSE BOARDS

6.01.00 All fuse boards shall be metal enclosed, fixed type, non-compartmentalized construction, suitable for indoor/ outdoor mounting on wall or steel structure.

6.02.00 The fuse board frame shall be fabricated using suitable mild steel structures or pressed and shaped cold rolled sheet steel of thickness not less than 2.0 mm. The frames shall be enclosed by cold rolled sheet steel of thickness not less than 1.6 mm.

6.03.00 The fuse boards shall be provided with doors on the front. The doors shall preferably be in two halves with hinges at the extreme ends and locking facility at the centre.

6.04.00 Suitable EPDM/Neoprene gaskets shall be provided to make fuse boards completely dust and vermin-proof with a degree of protection of IP-52 for indoor and IP-54 for outdoor application, as per IS/IEC 60947.

6.05.00 Each DC fuse board shall comprise of the following :

(a.) 1 no. 63 A switch as incomer

(b.) 100 A fully insulated (PVC sleeved or epoxy coated) busbars.

(c.) 8 nos. 16A outgoing Fuse feeders.

(d.) 1 no. auxiliary contactor for supply monitoring.

(e.) 1 no. indicating lamp with resistor and blue coloured lens.

6.06.00 Each AC fuse board shall comprise of the following :

(a.) 1 no. 63A TPN switch as incomer.

(b.) 100 A, 3-phase, 4-wire, fully insulated (PVC sleeved or epoxy coated) busbars.

(c.) 9 nos. 16 A single phase switch fuse units and 3 nos. 16 A TPN switch fuse units as outgoing feeders or alternatively 16 amps MCCB can be provided.

(d.) 3 nos. indicating lamps with resistors and coloured lenses (R, Y, B) for incoming supply monitoring.

6.07.00 The fuses shall be mounted in an insulating fuse carrier and it shall be possible to replace the outgoing feeder fuses without disturbing the other feeders. The handle of incoming switch shall be mounted on the door of the fuse board, with padlocking facility in both 'ON' and 'OFF' positions. The outgoing feeder switches shall preferably be of rotary type.

6.08.00 Cable entry facilities shall be provided at top / bottom with removable gland plates of suitable thickness. All incoming and outgoing cables shall be terminated on suitable terminal blocks.

7.00.00 POWER BUSBARS AND INSULATORS

7.01.00 All 415 V Switchboards, MCCs and ACDBs shall be provided with three phase and neutral busbars. Two separate sets of vertical busbars shall be provided in each panel of double front MCCs / DBs. Interleaving arrangement for busbars shall be adopted for switchboards with a rating of more than 1600A. DCDBs shall be provided with two (2) busbars. Entire busbar system shall be insulated with PVC sleeves. Busbar sleeves shall be compliant to UL224 (Extruded insulating tubing), CE/UL certified, having fire retardant properties and working temperature of 105^0C.

7.02.00 Vertical busbars of non-breaker panels shall be completely phase segregated by suitable insulating supports / walls made of fire-retardant, non-hygroscopic, track-resistant material to minimise the occurrence of arc faults.

7.03.00 All busbars and jumper connections shall be of high conductivity Aluminium alloy / Copper of adequate size.

7.04.00 The cross-section of the busbars shall be uniform throughout the length of switchboard section and shall be adequately supported and braced to withstand the stresses due to the specified short circuit currents. Neutral busbar short circuit strength shall be same as main busbars.

7.05.00 All busbars shall be adequately supported by non-hygroscopic, non-combustible, track-resistant and high strength sheet moulded compound or equivalent type polyester fibre glass

moulded insulator. Separate supports shall be provided for each phase and neutral busbar. If a common support is provided, anti-tracking barriers shall be provided between the supports. Insulator and barriers of inflammable material such as Hylam shall not be accepted. The busbar insulators shall be supported on the main structure.

7.06.00 All busbar joints shall be provided with high tensile steel bolts, belleville / spring washers and nuts, so as to ensure good contacts at the joints. Non-silver plated busbar joints shall be thoroughly cleaned at the jointed locations and suitable contact grease shall be applied just before making a joint. All bolts shall be tightened by torque spanner to the recommended value. The overlap of the busbars at each joint surface shall be such that the length of overlap shall be equal to or greater than the width of the busbar. All Copper to Aluminium joints shall be provided with suitable bimetallic washers.

7.07.00 All busbars shall be colour coded as per IS: 375.

7.08.00 Wherever the busbars are painted with black Matt paint, the same should be suitable for temperature encountered in the switchboard under normal operating conditions.

7.09.00 The Contractor shall furnish calculations establishing the adequacy of bus bar sizes for specified current ratings.

8.00.00 AUXILIARY BUSBARS AND CONTROL TRANSFORMERS

8.01.00 **AC CONTROL SUPPLY BUSBAR**

Each bus-section of all Switchgears and MCCs shall be provided with two (2) nos. 415V / 110V control transformers. The 110V AC control supply from the control transformers shall be run through the MCC by means of two sets of control supply busbars of electrolytic Copper. In case of one transformer failure, whole bus section can be fed through single transformer. The control supply to different modules shall be tapped individually from the control supply busbars.

8.02.00 **DC CONTROL SUPPLY BUSBARS**

Electrically controlled circuit breaker boards shall be provided with DC control supply busbars. The manually controlled breakers shall also be provided with such busbars in case relays are provided. Each section of the switchboard shall be provided with a DC supply by the Contractor. The Contractor shall provide suitable terminals, switch-fuse etc. to receive the DC supply and distribute the same through above mentioned control busbars to the required modules of the respective section. The DC control supply bus of one section shall be coupled to the control supply of other section through a switch located in the bus-coupler breaker panel. The DC supply to the bus-coupler breaker may be given from any of the control buses. For Emergency Switchgear, two DC supplies shall be provided along with suitable diodes for deriving the control supply through diode auctioneering. Power Supply to Numerical Relay and Ethernet switch shall be an independent circuit with switch and fuse tapped from the panel DC supply. Exact scheme for segregation of switchgear & numerical relay DC supplies shall be finalized during detailed engineering.

8.03.00 **SPACE HEATER BUSBARS**

Panel and motor space heaters shall be fed from separate AC auxiliary busbars running throughout the switchboard. The supply for these busbars shall be tapped from incomer, before the isolating switch/ circuit breaker. Incoming circuit to space-heater bus shall have an isolating switch, HRC fuse and neutral link of suitable rating. Suitable terminals shall also be provided to facilitate energisation of space-heater bus from outside during long shutdowns of unit / switch-board.

8.04.00 **CONTROL TRANSFORMERS**

The control transformers shall be 415 V / 110 V with neutral point-earthed, of insulation class 'B' or better. The sizing of Control transformers shall be carried out by Contractor considering

	the actual load of power contactors, auxiliary contactors, indicating lamps and other equipment in the module circuit. An additional load of 15 watts should also be considered for each module, for remote auxiliary relays and lamps to be connected in the control circuit of modules. Contractor shall also ensure that control transformers are adequately designed for meeting the momentary loading requirements & the voltage drop during this condition shall not be more than 5%.
9.00.00	**EARTH BUS AND EARTHING**
9.01.00	A galvanized steel / Copper / Aluminium earth bus shall be provided at the bottom of each panel and shall extend throughout the length of each switchboard. It shall be welded / bolted to the framework of each panel and breaker earthing contact bar. Vertical earth bus shall be provided in each vertical section which shall in turn be bolted / welded to main horizontal earth bus.
9.02.00	The earth bus shall have sufficient cross section to carry the momentary short circuit and short time fault current to earth, as indicated in "Technical Parameters", without exceeding the allowable temperature rise.
9.03.00	Suitable arrangements shall be provided at each end of the horizontal earth bus for bolting to Contractor's earthing conductors. The horizontal earth bus shall project out of the switchboard ends and shall have predrilled holes for this connection. All joint splices to earth bus shall be made through at least two bolts, and taps by proper lug and bolt connection.
9.04.00	All non-current carrying metal work of the switchboard shall be effectively bonded to the earth bus. Electrical conductivity of the whole switchgear enclosure framework and truck shall be maintained even after painting.
9.05.00	The carriage and breaker frame shall get earthed while being inserted in the panel and positive earthing of the breaker frame shall be maintained in all positions, i.e. SERVICE & ISOLATED, as well as throughout the intermediate travel.
9.06.00	Each module frame shall get engaged to the vertical earth bus before the disconnecting contacts on the module are engaged to the vertical busbars.
9.07.00	All metallic cases of relays, instruments and other panel-mounted equipment shall be connected to earth by independent stranded Copper wires of size not less than 2.5 sq. mm. All the equipment mounted on the door shall be earthed through flexible wire/braids. Insulation colour code of earthing wires shall be green. Earthing wires shall be connected to terminals with suitable clamp connectors, soldering is not acceptable. Looping of earth connections, which would result in loss of earth connections to other devices, when a device is removed, is not acceptable. However, looping of earth connections between equipment to provide alternative paths to earth bus is acceptable.
9.08.00	VT and CT secondary neutral point earthing shall be at one place only, i.e. on the terminal block. Such earthing shall be made through links so that earthing of one secondary circuit shall be removed without disturbing the earthing of other circuit.
9.09.00	All hinged doors having potential carrying equipment mounted on it shall be earthed by flexible wire/ braid. For doors not having potential carrying equipment mounted on it, earth continuity through scraping hinges/ hinge pins of proven design may also acceptable. The Contractor shall establish earth continuity at site also.
10.00.00	**Circuit Breakers**
10.01.00	Circuit breakers shall be three pole, air break, horizontal draw out type, and shall have fault making and breaking capacities as specified in "Technical Parameters". The circuit breakers which meet specified parameters of continuous current rating and fault making / breaking capacity only after provision of cooling fans or special device shall not be acceptable.

10.02.00	Circuit breakers along with its operating mechanism shall be provided with suitable arrangement for easy withdrawal. Suitable guides shall be provided to minimize misalignment of the breaker.
10.03.00	There shall be "SERVICE", "TEST" and "FULLY WITHDRAWN" positions for the breakers. In "Test" position the circuit breaker shall be capable of being tested for operation without energizing the power circuits i.e. the power contacts shall be disconnected, while the control circuits shall remain undisturbed. Locking facilities shall be provided so as to prevent movement of the circuit breaker from the "SERVICE", "TEST" or "FULLLY WITHDRAWN" position. It shall be possible to close the door in "Test" position. The circuit breaker rack in and rack out from Service to Test, Test to Isolated position or vice-versa shall be possible only in the door closed position.
10.04.00	All circuit breakers shall be provided with "6 NO" and "6NC" potential free auxiliary contacts. These contacts shall be in addition to those required, for internal mechanism of the breaker and should be directly operated from breaker operating mechanism. In case the manufacturer does not have a proven arrangement for providing the required number of circuit breaker auxiliary contacts on the fixed portion of the cubicle, necessary electrically reset latched relays shall be provided complete with all wiring in series with service position limit switch contacts, for multiplying the circuit breaker mounted auxiliary contacts and provide 4 NO and 4 NC contacts. Separate limit switches, each having required numbers of contacts shall be provided in both "SERVICE" and "TEST" position of the breaker. All contacts shall be rated for making, continuously carrying and breaking 10 Amp at 240 V AC and 1 Amp (Inductive) at 240 V DC respectively.
10.05.00	Suitable mechanical indications shall be provided on all circuit breakers to show "OPEN", "CLOSE", "SERVICE ", "TEST" AND "SPRING CHARGED" positions.
10.06.00	Main poles of the circuit breakers shall operate simultaneously in such a way that the maximum difference between the instants of contacts touching during closing shall not exceed half a cycle of rated frequency.
10.07.00	All circuit breakers shall be provided with the following interlocks :
10.07.01	Movement of a circuit breaker between "SERVICE" and "TEST" position shall not be possible unless it is in open position. Attempted withdrawal of a closed circuit breaker shall preferably not trip the circuit breaker. In case the offered circuit breaker trips on attempted withdrawal as a standard interlock, it shall be ensured that sufficient contact exists between the fixed and draw out contact at the time of breaker trip so that no arcing takes place even with the breaker carrying its full rated current.
10.07.02	Closing of a circuit breaker shall not be possible unless it is in "SERVICE" position, "TEST" position or in "FULLY WITHDRAWN" position.
10.07.03	Circuit-breaker cubicles shall be provided with safety shutters operated automatically by the movement of the circuit breaker carriage, to cover the stationary isolated contacts when the breaker is withdrawn. It shall however be possible to open the shutters intentionally against pressure for testing purposes.
10.07.04	A breaker of particular rating shall be prevented from insertion in a cubicle of a different rating.
10.07.05	Circuit breakers shall be provided with coded key / electrical interlocking devices, as per requirements.
10.08.00	Circuit breaker shall be provided with anti-pumping relay and trip free feature, even if mechanical anti-pumping feature is provided.

10.09.00 Mechanical tripping shall be possible by means of front mounted Red "trip" push-button. In case of electrically operated breakers these push buttons shall be shrouded to prevent accidental operation.

10.10.00 Complete shrouding / segregation shall be provided between incoming and outgoing bus links of breakers. In case of bus coupler breaker panels the busbar connection to and from the breaker terminals shall be segregated such that each connection can be approached and maintained independently with the other bus section live. Dummy panels if required to achieve the above feature shall be included in the Contractor's scope of supply.

10.11.00 Circuit breaker shall be provided with Power operated mechanism as follows.

1.	Power operated mechanism shall be provided with a universal motor suitable for operation on 240 V DC / 240 AC Control supply, with voltage variation from 198 V to DC to 242 V DC . Motor insulation shall be class "E" or better.
2.	The motor shall be such that it requires not more than 30 seconds for fully charging the closing spring at minimum available control voltage.
3.	Once the closing springs are discharged, after one closing operation of circuit breaker, it shall automatically initiate recharging of the spring.
4.	The mechanism shall be such that as long as power is available to the motor, a continuous sequence of closing and opening operations shall be possible. After failure of power supply at least one open-close-open operation shall be possible.
5.	Provision shall be made for emergency manual charging and as soon as this manual charging handle is coupled, the motor shall automatically get mechanically decoupled.
6.	All circuit breakers shall be provided with closing and trip coils. The closing coil shall operate correctly at all values of voltage from 187-242 V DC. The trip coil shall operate satisfactorily at all values of voltage from 154-242V DC /77 V-121 V DC
7.	Provision for mechanical closing of the breaker only in "Test" and "WITHDRAWN" positions shall be made. Alternately, the mechanical closing facility shall be normally made inaccessible; accessibility being rendered only after deliberate removal of shrouds.
8.	It shall not be possible to open the ACB panel door in breaker closed condition. Further, the racking mechanism shall be accessible only after opening the breaker panel door.

Note: The circuit breakers for DC applications shall have manually operated mechanism of spring charged, stored energy type. The closing operation of the circuit breaker shall charge the tripping spring. Necessary interlocks shall be provided to inhibit closing of the circuit breaker unless the closing spring is fully charged.

11.00.00 TELESCOPIC TROLLEY

Telescopic trolley or suitable arrangement shall be provided for maintenance of circuit-breaker module in a cubicle. The trolley shall be such that the top most breaker module can be withdrawn on the trolley and can be lowered for maintenance purpose. The telescopic

	trolley shall be such that all type, size and rating of breaker can be withdrawn /inserted of particular switchgear. The quantity of telescopic trolleys to be supplied shall be adequate for the number of switchgears / switchgear rooms.
12.00.00	**AIR BREAK SWITCHES**
12.01.00	Air break switches shall be of heavy duty, single throw, group operated, load break, fault make type when associated with fuses. All switches for motor circuits shall be of utilization category AC-23A with 1NO +1NC auxiliary contact, which shall be wired to the control circuit as shown in the schematic drawings. All switches for other outgoing feeders shall be of utilization category AC-22A. All switches for DC circuits shall be suitable for 240 V DC and shall be of DC-22 utilization category.
12.02.00	Continuous current rating of the switches shall be selected from the 'Module Selection tables' for various feeders.
12.03.00	The combination of switch-fuse unit would be preferred. However, if separate switch and fuses are provided, switch shall be located before fuses.
12.04.00	The main switches shall be operable from outside the module door. The switch handle shall clearly indicate the position of switch. Switch operating handles shall be provided with padlocking facilities. However, incomer switches of switchboards shall be provided with padlocking facility in both 'ON' and 'OFF' positions.
12.05.00	Interlocks shall be provided such that the cubicle door will not open when the switch is in closed position and the switch will close only when the door is closed.
12.06.00	Switches and fuses for AC/DC control supply and heater supply wherever required, shall be mounted inside the cubicles. Toggle switch is not acceptable.
12.07.00	Even if a single phase feeder is required for certain applications, Contractor shall provide TPN switch, fuse-bases and cable/ link connections between switch/fuse and vertical busbars for all the three phases, so that changing from single phase feeder to three phase feeder is possible without any modification other than inserting fuses at site.
13.00.00	**MCCB**
13.01.00	MCCB shall be fixed type / part of withdrawable feeder module as per specification, three pole, air break type having trip free mechanism with quick make and quick break type contacts. MCCB shall have current limiting feature. MCCB of identical ratings shall be physically and electrically interchangeable. MCCB shall be provided with 1 NO and 1NC auxiliary contacts.
13.02.00	MCCB shall be provided with Microprocessor based inbuilt front adjustable releases (Overload & Short-circuit) and shall have adjustable Earth Fault protection unit also. The protection settings shall have suitable range to achieve the required time & current settings. LED indications shall also be provided for faults, MCCB status (on/off etc.).
13.03.00	MCCB terminals shall be shrouded and designed to receive cable lugs for cable sizes relevant to circuit rating. Extended cable terminal arrangement for higher size cable may also be offered. ON and OFF position of the operating handle of MCCB shall be displayed and the rotary operating handle shall be mounted on the door of the compartment housing MCCB. The compartment door shall be interlocked mechanically with the MCCB to prevent opening of the door unless the MCCB is in OFF position. MCCB shall be provided with padlocking facility to enable the operating mechanism to be padlocked. The MCCBs being offered shall have common / interchangeable accessories for all ratings like aux. switch, shunt trip, alarm switch etc. The MCCBs shall have the current discrimination up to full short circuit capacity and shall be selected as per manufacturer's discrimination table.
13.04.00	Auxiliary contacts of the MCCBs pertaining to critical feeders, to be decided during detailed engineering, shall be connected to the digital inputs available in the numerical relays of

Incomer / Bus-coupler / Outgoing circuit breaker feeders, for integration into the numerical relay network.

14.00.00 CONTROL AND SELECTOR SWITCHES

14.01.00 Control and selector switches shall be of heavy duty, rotary type with escutcheon plates clearly marked to show the positions. The control & selector switches should be as per IS/IEC 60947 Part V section 1. The switches shall be of sturdy construction suitable for mounting on panel front. Switches with shrouding of live parts and sealing of contacts against dust ingress shall be preferred.

14.02.00 Ammeter and voltmeter selector switches shall have four stay put positions with adequate number of contacts for 3-phase 4-wire system. These shall have oval handles. Ammeter selector switches shall have make before break type contacts to prevent open circuiting of CT secondary.

14.03.00 Contacts of the switches shall be spring assisted and shall be of suitable material to give a long trouble free service.

14.04.00 The contact ratings shall be at least the following :

1.	Make and carry, continuously, 10 A at 240 V DC and 110 V AC
2.	Breaking current at 240 V DC, 1 A (inductive)
3.	Breaking current at 110 V AC and 0.3 lagging p.f., 5A

15.00.00 CONTACTORS

15.01.00 Motor starter contactors shall be of air break, electromagnetic type rated for uninterrupted duty as per IS/IEC 60947 Part-4 Section- 1.

15.02.00 Contactors shall be double-break, non-gravity type and their main contacts shall be silver faced.

15.03.00 Direct-on-line contactors shall be of utilization category AC3. Reversing starters shall comprise of Forward and Reverse contactors mechanically and electrically interlocked with each other. These contactors shall be of utilization category AC4. DC contactors shall be of DC3 utilization category. For CHP conveyor motors, minimum rating of power contactors shall be 240% of full load current of the motors. For other CHP drives, minimum rating of power contactors shall be 160% of full load current of motor.

15.04.00 The number of normally open (NO) and normally closed (NC) auxiliary contacts of a contactor shall be as per requirement shown in the respective module drawings. It shall, however, be not less than 2NO+2NC.

15.05.00 Operating coil of contactors shall be of 110 V AC unless otherwise specified elsewhere. The contactor shall operate satisfactorily between 85% and 110% of the rated voltage. The contactor shall not drop out at 70% of the rated voltage but shall definitely drop out at 20% of the rated voltage.

15.06.00 Contactors for DC drives shall have a coil voltage of 240 V DC. DC operated contactor coil shall have an economy resistor and shall be suitable for satisfactory continuous operation at 187-242 V DC/ 93.5-121 V

16.00.00 FUSES

16.01.00 All fuses shall be of HRC cartridge fuse link type. Screw type fuses shall not be accepted. Fuses for AC circuits shall be rated for 80kA rms (prospective) breaking capacity at 415V AC and for DC circuits, 20kA rms breaking capacity at 240V DC.

16.02.00	Fuse shall have visible operation indicators. Insulating barriers shall be provided between individual power fuses.
16.03.00	Fuse shall be mounted on insulated fuse carriers, which are mounted on fuse bases. Wherever it is not possible to mount fuses on carriers, fuses shall be directly mounted on plug-in type of bases. In such cases one set of insulated fuse pulling handles shall be supplied with each switchboard.
16.04.00	Fuse ratings shall be selected by the Contractor from the 'Module Selection Tables' for various feeder ratings. However, the fuse ratings for motor feeders given in the 'Motor Module Selection Table' are indicative only, and the same shall be coordinated by the Contractor to achieve class-II protection coordination and also to match the motor characteristics. Switch rating shall in no case be less than the fuse rating.
16.05.00	The Neutral links shall be mounted on fuse carriers which shall be mounted on fuse bases.
17.00.00	**Instrument Transformers**
17.01.00	All current and voltage transformers shall be of cast resin insulated type suitable for continuous operation at the temperature prevailing inside the switchgear enclosure, when the switchboard is operating at its rated condition and the specified ambient temperature. The class of insulation shall be 'E' or better.
17.02.00	Alternatively, current transformers with unbreakable, flame retardant, self-extinguishing Nylon casing of UL94 grade are also acceptable.
17.03.00	All instrument transformers shall be able to withstand the thermal and mechanical stresses resulting from the maximum RMS short circuit breaking and peak making current ratings of the associated switchgear.
17.04.00	All instrument transformers shall have clear indelible polarity markings. All secondary terminals shall be wired to separate terminals on an accessible terminal block where star point formation and earthing shall be done.
17.05.00	Current transformers may be multi or single-core type. All voltage transformers shall be single phase type.
17.06.00	The bus VTs shall be housed in a separate compartment. All VTs shall have readily accessible HRC current limiting fuses on both primary and secondary sides.
17.07.00	All CTs shall be provided with supports independent of busbar / busbar supports.
17.08.00	The CTs shall be located in such a way that they can be easily approached for maintenance without necessitating shut down of adjacent feeders.
18.00.00	**Numerical relays & networking**
18.01.00	All circuit breaker feeders shall be provided with communicable numerical relays complying with IEC-61850, having protection, control, measurement and monitoring features. These relays shall be connected to the Switchgear SCADA System, through Ethernet switches. The relays shall be flush mounted on panel front with connections from the inside. These numerical relays shall be of types as proven for the application and shall be subject to Employer's approval. Numerical relays shall have appropriate setting ranges, accuracy, resetting ratio and other characteristics to provide required sensitivity. All equipment shall have necessary protections as detailed in the standard scheme drawings / module type descriptions.
18.02.00	Control of circuit breakers shall be carried out from DDCMIS through hardwired control commands in the form of 24V DC signal. Preferably, binary input of all relays shall be

configurable to accept 24V DC signals directly from DDCMIS and no separate coupling relays shall be provided. The Local control console of the relay flush mounted on the switchgear would normally be used only for testing of circuit breaker in isolated position, and for tripping it in an emergency. Provision for closing & tripping of the circuit breaker locally from laptop through serial port shall be possible to facilitate commissioning activities. The basic control scheme of breaker feeders shall be developed using the programmable (soft) logics in the relay.

18.03.00 Each numerical relay shall be connected to the Ethernet switch provided in the Switchgear through Cat5e Ethernet /FO cable. Ethernet Switches shall be connected through Fibre Optic cable to form a ring network. A typical architecture of Switchgear SCADA is explained in chapter on MV Switchgear Protection, Control & Measurements.

18.04.00 The numerical relay shall be capable of measuring and storing values of a wide range of quantities, events, faults and disturbance recordings. The alarm / status of each of protection function and trip operation shall be communicated to Switchgear SCADA / DDCMIS. The numerical relays shall have built in feature / hardware interface to provide such inputs to Switchgear SCADA / DDCMIS for analog / digital values.

18.05.00 The required .ICD / .CID files of the Numerical relays under the scope of this package for the integration with the SCADA shall be provided by the Numerical relay vendor along with necessary engineering support. At least one no. of each type of Numerical Relay shall be made available during the Factory Acceptance Test (FAT) of the Switchgear SCADA system along with the necessary engineering support from the Numerical Relay vendor.

18.06.00 All relays shall be rated for control supply voltage as mentioned elsewhere under parameters and shall be capable of satisfactory continuous operation between 80-120% of the rated voltage. Making, carrying and breaking current ratings of their contacts shall be adequate for the circuits in which they are used. Contacts for breaker close and trip commands shall be so rated as to be used directly used in the closing and tripping circuits of breaker without the need of any interposing / master trip relays. Threshold voltage for binary inputs shall be suitably selected to ensure avoidance of mal operation due to stray voltages and typically shall be more than 70% of the rated control supply voltage.

18.07.00 One minute power frequency withstand test voltage for all numerical relays shall at least be 2kV (rms).

18.08.00 Failure of a control supply and de-energization of a relay shall not initiate any circuit breaker operation.

18.09.00 Disturbance Record waveforms, event records & alarms shall be stored in Non-volatile memory and failure of control supply shall not result in deletion of any of these data.

18.10.00 All IEDs shall have freely programmable optically isolated binary inputs (BI) and potential free binary output (BO) contacts, the quantity of which shall be adequate to realize the associated interlocks / feedbacks.

	In case the offered IED does not have the required number of I/Os, the same can be achieved through external I/O device of same make complying with the requirement stated elsewhere in this specification.
18.11.00	All the numerical relays shall have communications on three ports, local front port for communication with laptop and dual ports on IEC 61850 to communicate with the Switchgear SCADA System.
18.12.00	All the numerical relays shall have adequate processor memory for implementing the programmable scheme logic required for the realization of the protection / control schemes, in addition to the built in protection algorithms.
18.13.00	All Numerical relays shall have features for electrical measurements including voltage, current, power (active & reactive), frequency, power-factor and energy parameters.
18.14.00	Relays shall have event recording feature, recording of abnormalities and operating parameters with time stamping.
18.15.00	Master trip (86) and non-86 trips shall be software configurable to output contacts and no separate master trip relay shall be used.
18.16.00	All numerical relays shall have provision of both current (CT) and voltage (VT) inputs. Relays shall be suitable for both residually connected neutral CT input as well as CBCT input. Relays shall be suitable for CT secondary current of 1A. Motor relays shall have 4 CT inputs. Relays for Incomers, Bus-couplers & Ties shall have 4 CT inputs. All relays except incomers, ties and bus-couplers shall have 3Nos of VT inputs. Relays used in incomers, ties and bus couplers shall have provision of two sets of voltage inputs (3Nos for bus voltage & 1No. for line voltage) for the purpose of synchronization.
18.17.00	All CT terminals on the relays shall be of fixed type suitable for connection of ring-type lugs to avoid any hazard due to loose connection leading to CT open-circuit. In no circumstances Plug-in type connectors shall be used for CT / VT connections.
18.18.00	All numerical relay shall have key pad / keys to allow relay settings from relay front. All hand reset relays shall have reset button on the relay front. Relay to be self or hand reset shall be software selectable. Manual resetting shall be possible from remote.
18.19.00	Relays shall have self-diagnostic feature with self-check for power failure, programmable routines, memory and main CPU failures and a separate output contact for indication of any failure.
18.20.00	Relays shall have at least two sets or groups of two different sets of adaptable settings. Relays shall have multiple IEC / ANSI programmable characteristics.
18.21.00	Design of the relay must be immune to any kind of electromagnetic interference. Vendor shall submit all related type test reports for the offered model along with the offer.
18.22.00	All cards / hardware of numerical relays shall be suitable for operation in Harsh Environmental conditions with respect to high temperature, humidity & dust.

18.23.00	Relay shall be immune to capacitance effect due to long length of connected control cables. Any external hardware, if required for avoiding mal operation of the relay due to cable capacitance shall be included as a standard feature.
18.24.00	All I/Os shall have galvanic isolation. Analog inputs shall be protected against switching surges, harmonics etc.
18.25.00	Numerical relays shall have two level password protections, one for read only and other for authorization for modifying the setting etc.
18.26.00	Numerical relays shall have feature for Time synchronization through the Switchgear SCADA System. The resolution of time synchronization shall be +/- 1.0 millisecond or better throughout the entire system.
18.27.00	Relays & Ethernet switches shall be suitable to accept both AC & DC supplies with range 110V or 220V with tolerance of 70 % to 120 % of rated voltage & shall be finalized during detailed engineering.
19.00.00	**Other Protections and Control functions in the Relays**
19.01.00	Trip circuit supervision shall be provided for all feeders to monitor the circuit breaker trip circuit both in pre-trip and post-trip conditions.
19.02.00	Schematics requiring auxiliary relays / timers for protection function shall be a part of numerical relay. The number of auxiliary relay and timer function for protection function shall be as required. Timer functions shall be programmable for on/off delays.
19.03.00	Bus no volt condition shall be configured to an output contact of the relay of incomers for suitably interfacing with DDCMIS wherever required.
19.04.00	The numerical relay shall be able to provide supervisory functions such as trip circuit monitoring, circuit breaker state monitoring, VT and CT supervisions and recording facilities with post fault analysis.
19.05.00	The numerical processor shall be capable of measuring and storing values of a wide range of quantities, all events, faults and disturbance recordings with a time stamping using the internal real time clock. Battery backup for real time clock in the event of power supply failure shall be provided.
19.06.00	At least 200 time tagged events / records shall be stored with time stamping. Details of at least 5 previous faults including the type of protection operated, operating time, all currents & voltages and time of fault.
19.07.00	Diagnostics Automatic testing, power on diagnostics with continuous monitoring to ensure high degree of reliability shall be shall be provided. The results of the self-reset functions shall be stored in battery back memory. Test features such as examination of input quantities, status of digital inputs and relay outputs shall be shall be available on the user interface.
19.08.00	The alarm/status of each individual protection function and trip operation shall be communicated to Switchgear SCADA / DDCMIS.

19.09.00	Sequence of events shall have 1ms resolution at device level.
19.10.00	Measurement accuracy shall be 1 % for RMS Current and voltage.
19.11.00	It shall be possible to carryout open / close operation of breakers from a laptop by interfacing from the relay front port during initial commissioning.
19.12.00	Required No. of extra binary inputs shall be provided in the numerical relay for digital inputs from critical outgoing MCCB feeders on that switchgear section.
19.13.00	Circuit-breaker status, protection status, etc. required for control logics shall be hardwired to DDCMIS. In addition, any other requirement of digital & analog signals for process controls shall be taken care of.
19.14.00	**TRAINING**
19.14.01	The contractor shall arrange for training on system design, engineering, operation and maintenance of Numerical relays and Switchgear networking system for a duration of two (2) man-months.
19.14.02	Workshop Training at site shall aim for familiarization of Site Engineers for commissioning and day to day O & M of Numerical Relays and trouble shooting.
19.14.03	The scope shall include training for a batch of 20 engineers at Project Site. One such Workshop shall be organized before the commissioning of First LV Switchboard and the Second workshop shall be conducted before Unit Commissioning. Owner shall provide the required Infrastructure such as Training Conference room, Projection systems etc.
20.00.00	**INDICATING INSTRUMENTS**
20.01.00	All indicating and integrating meters shall be flush mounted on panel front. The instruments shall be of at least 96mm square size with 90 degree linear scale and shall have an accuracy class of 1.0 or better. The covers and cases of instruments and meters shall provide a dust and vermin proof construction.
20.02.00	All instruments shall be compensated for temperature errors and factory calibrated to directly read the primary quantities. Means shall be provided for zero adjustment without removing or dismantling the instruments.
20.03.00	All instruments shall have white dials with black numerals & lettering. Black knife edge pointer shall be provided for meters.
20.04.00	Ammeters provided for motor feeders (for motors of rating ≥ 30kW & < 100kW) shall have a compressed scale at the upper current region to cover the starting current up to 6.0 times the CT primary current.
20.05.00	All motor feeders of rating ≥ 30 kW and < 110 kW shall be provided with Multifunction Digital Energy Meter with communication facility to display the current, voltage, power factor, power energy related data locally as well as communicate these for remote metering/audit/analysis purposes. These meters shall The technical specification for Digital indicating energy meter shall be as follows:

a) Input Voltage:110VAC / 240VDC

b) Input Current:1A

c) Size:96X96 SQ.MM

d) Power & Energy Accuracy: 1.0

e) Mounting: Flush mounting

f) Type: True RMS 3-PHASE V,I, kW,PF & kWH indication

g) 4 Digit, seven segment LED display/LCD display, with floating decimal

h) Communication: In built RS 485 bus port

i) Operating Frequency: 45 HZ-65HZ

j) Dielectric Test: 2KV RMS for 1 minute

k) Over Current: 10 times for 3 sec.

l) Aux supply: 90V-300V AC/DC

m) Compliance: EMC/EMI

n) Field programmable CT ratio

o) Analog Current Output (4-20 mA)

21.00.00 PUSH BUTTONS

21.01.00 Push-buttons shall be of spring return, push-to-actuate type. Their contacts shall be rated to make, continuously carry and break 10 A at 110 V AC and 1 A (inductive) at 240 V DC.

21.02.00 All push buttons shall have two (2) normally open and two (2) normally closed contact, unless specified otherwise. The contact faces shall be of silver alloy.

21.03.00 All push-buttons shall be provided with integral escutcheon plates marked with its function.

21.04.00 The colour of the button shall as follows :

Green	for motor START, breaker CLOSE , valve/ damper OPEN commands.
Red	for motor trip, breaker open, valve / damper close commands.
Black	for all annunciation functions, overload reset and miscellaneous commands including reverse for clinker grinder etc.

21.05.00 All push buttons on panels shall be located in such a way that Red push button shall always be to the left of Green push button. In case of clinker grinder etc. the push buttons would be black - red-green from lift to right.

21.06.00 All emergency push buttons shall have mushroom knobs.

22.00.00 Indicating Lamps

22.01.00 Indicating lamps shall be of CLUSTER LED type. The lamps shall have escutcheon plates marked with its function, wherever necessary.

22.02.00 Lamps shall have translucent lamp-covers of the following colours, as warranted by the application :

	Red for motor ON, valve / damper OPEN, breaker CLOSE. **Green** for motor OFF , valve / damper CLOSE, breaker OPEN. **White** for motor AUTO TRIP. **Blue** for all healthy conditions (e.g. control supply, and also for SPRING CHARGED"). **Amber** for all Alarm Conditions (e.g. overload). Also for "SERVICE" and "TEST" position indications.
22.03.00	Bulbs and lamp covers shall be easily replaceable from the front of the cubicle. The method of mounting indicating lamp fittings on panels shall prevent their rotation under the action of lamp removal or replacements, reliance upon the tightness of ring nut for the purpose is not sufficient.
22.04.00	Indicating lamps should be located just above the associated push-button / control switches. Red lamps shall invariably be located to the right of green lamps. In case a white lamp is also provided, it shall be placed between the red and green lamps along the centre line of control switch / push button pair. Blue and Amber should normally be located above the Red and Green lamps.
22.05.00	When associated with push-buttons, red lamps shall be directly above the green push-button and green lamp shall be directly above the red push button.
22.06.00	All indicating lamps shall be suitable for continuous operation at 90% to 110% of their rated voltage.
23.00.00	**Space Heater**
23.01.00	Space heaters shall be provided in the switchboards wherever the manufacturer considers them necessary and recommends their provision for preventing harmful moisture condensation.
23.02.00	The space heaters shall be suitable for continuous operation on 240 V AC, 50 Hz, single phase supply, and shall be automatically controlled by thermostats. Necessary switches and fuses shall be provided.
23.03.00	The circuit for each panel and motor space heater should have an isolating switch, HRC fuse and isolating link. In addition, the space heater circuit of each panel shall also have a thermostat of suitable rating.
24.00.00	**INTERNAL WIRING**
24.01.00	All switchboards shall be supplied completely wired internally upto the terminals, ready to receive external cables.
24.02.00	All inter-cubicle and inter-panel wiring and connections between panels of same switchboard including all bus wiring for AC and DC supplies shall be provided by the Contractor.

24.03.00	All auxiliary wiring shall be carried out with 650V grade, single core stranded Copper conductor, colour coded, PVC insulated wires. Conductor size shall be 1.5 mm^2 (min.) for control circuit wiring and 2.5 mm^2 (min) for CT and space heater circuits.
24.04.00	Extra flexible wires shall be used for wiring to devices mounted on moving parts such as hinged doors. The wire bunches from the panel inside to the doors shall be properly sleeved or taped.
24.05.00	All wiring shall be properly supported, neatly arranged, readily accessible and securely connected to equipment terminals and terminal blocks.
24.06.00	All internal wiring terminations shall be made with solderless crimping type tinned Copper lugs which shall firmly grip the conductor or an equally secure method. Similar lugs shall also be provided at both ends of component to component wiring. Insulating sleeves shall be provided over the exposed parts of lugs to the extent possible. Screw-less (spring loaded) / cage clamp type terminal shall also be provided with lugs.
24.07.00	Printed single tube ferrules marked to correspond with panel wiring diagram shall be fitted at both ends of each wire. The wire identification marking shall be in accordance with IS: 375. Red Ferrules should be provided on trip circuit wiring.
24.08.00	Wiring for equipment, which are to be supplied by the Contractor and for which the Contractor has to provide mounting arrangement in his panels, shall also be provided by the Contractor, up to the terminal blocks.
24.09.00	All connections from vertical busbars for individual modules above 100 A shall be by Copper / Aluminium links only. The cable connections for modules less than 100 A shall be selected in such a way that there will not be any melting / shorting in case of a short circuit inside the module and the cable shall have current rating to carry the let through energy of the corresponding fuses in case of a fault. The insulation of the cable and its cross section shall be decided considering the high ambient temperature within the module. For all modules where use of cable is envisaged by the Contractor specific approval from the Employer regarding cable details are to be taken. For power wiring colour coded wire insulation / tapes shall be provided.
25.00.00	**CONTROL TERMINAL BLOCKS**
25.01.00	Terminal blocks shall be 650V grade, 10Amps rated, made up of unbreakable polyamide 6.6 grade. The terminals shall be either screw type or screw-less (spring loaded) / cage clamp type with lugs. Marking on terminal strips shall correspond to the terminal numbering in wiring diagrams. All metal parts shall be of non-ferrous material. In case of screw type terminals the screw shall be captive, preferably with screw locking design.
25.02.00	Terminal blocks for CT and VT secondary leads shall be of stud type, made up of unbreakable polyamide 6.6 grade. They shall be provided with links to facilitate testing, isolation star / delta formation and earthing. Terminal blocks for CT secondary shall have the short circuiting facility. The terminals for remote ammeter connection etc. shall also be disconnecting type only. All metal parts shall be of non-ferrous material. Screws shall be captive.

25.03.00	In all circuit breaker panels MCC modules at least 10% spare terminals for external connections shall be provided and these spare terminals shall be uniformly distributed on all terminal blocks.
25.04.00	All terminal blocks shall be suitable for terminating on each side two (2) nos. stranded Copper conductors of size up to 2.5 sq. mm each, or alternatively, the terminal blocks shall have the possibility of double shorting space to facilitate looping. However for DDCMIS terminals shall be suitable for 1.5 mm^2 cable.
25.05.00	All terminals shall be numbered for identification and grouped according to the function. Engraved white-in-black labels shall be provided on the terminal blocks.
25.06.00	Wherever duplication of a terminal block is necessary it shall be achieved by solid bonding links.
25.07.00	Terminal blocks shall be arranged with at least 100mm clearance between two sets of terminal blocks. The minimum clearance between the first row of terminal blocks and the associated cable gland plate shall be 250 mm.
26.00.00	**Power Cable Termination**
26.01.00	Cable termination compartment and arrangement for power cables shall be suitable for heavy duty, 1.1 kV grade, stranded Aluminium conductor, PVC/ XLPE insulated, armored / unarmored and PVC sheathed cables. The size and type of cable for individual modules shall, preferably, be as indicated in the 'Module Selection Tables'. All necessary cable terminating accessories such as supporting clamps and brackets, hardware etc. for cables shall be provided by the contractor to suit the final cable sizes.
26.02.00	All power cable terminals shall be of stud type and the power cable lugs shall be of tinned Copper solderless crimping ring type conforming to IS: 8309. All lugs shall be insulated/ sleeved.
27.00.00	**LOCAL PUSH BUTTON STATIONS**
27.01.00	The enclosure shall be provided with a hinged guard at the front, covering full length, to avoid inadvertent operation of push buttons Support structure for mounting the LPBS shall also be supplied by Contractor. The local push button stations shall be dust and vermin proof and shall have a degree of protection of IP -55 as per IS/IEC 60947. The DOP shall be IP-65 in case the same are located in dusty areas.
27.02.00	The local push button stations shall be metal enclosed, suitable for outdoor / indoor mounting on wall or steel structures. The enclosure shall be die-cast Aluminium or cold-rolled sheet steel of at least 1.6 mm thickness. LPBS shall be painted to shade no. RAL: 9002.
27.03.00	Local push button stations enclosure made of FRP (Fiberglass Reinforced Polymer) may also be offered. The FRP enclosure shall be of SMC Hot press Moulded, Halogen free and flame retardant as per UL94, V-0. The thickness of the FRP enclosure shall be at least 4mm. The colour of the FRP type LPBS shall be of RAL 7035 and the hinges, nuts & bolts shall be of Polyamide / Stainless Steel material.

27.04.00 The push button stations shall be suitable for bottom cable entry and shall be provided with removable undrilled gland plates or knockouts to facilitate termination of two numbers of control cables. Adequate space shall be available inside the push button station enclosure for terminating external cables directly on pushbutton terminals. Overall size of push button stations shall be subject to Employer's approval.

27.05.00 The push button station shall comprise of a latched type EMERGENCY STOP push button with two (2) NO and two (2) NC contacts.

27.06.00 Support structure for mounting in local motor starters shall be supplied by the Contractor.

28.00.00 LOCAL MOTOR STARTERS

28.01.00 Local motor starters shall be suitable for manual switching of 415 V, 3-phase, squirrel cage motors rated up to 5.5 kW. They shall have constructional features similar to those specified for local push button stations.

28.02.00 Each starter shall comprise of :

1.	A 3-pole contactor, mechanically latched type.
2.	Start push button, coloured green.
3.	Stop push button, coloured red.
4.	Ambient temperature compensated, thermal over load relay with single phasing protection. The continuously variable relay setting range shall be suitable for the motor rating which shall be advised to the Contractor in due course. The relay shall trip the contactor.

28.03.00 The start push button, when pressed, shall preferably remain in depressed position and shall be released along with the contactor when the stop push button is pressed or when thermal overload relay operates.

28.04.00 Local starters shall be suitable for loop-in and loop-out of incoming cable and for one outgoing cable to motor. Support structure for mounting in local motor starters shall be supplied by the Contractor.

29.00.00 Name Plates and Labels

29.01.00 All Switchgears, MCCs, Distribution Boards, Fuse boards, all feeders, local push-button stations and local motor starters shall be provided with prominent, engraved identification plates. The module identification plate shall clearly give the feeder number and feeder designation. For single front switchboards, similar panel and board identification labels shall be provided at the rear switchgear also.

29.02.00 All name plates shall be of non-rusting metal or 3-ply Lamicoid, with white engraved lettering on black background. Inscription & lettering sizes shall be subject to Employer's approval.

29.03.00 Suitable stenciled paint mark shall be provided inside the panel/module for identification of all equipment in addition to the plastic sticker labels, if provided. These labels shall be positioned so as to be clearly visible and shall have the device number, as mentioned in the module wiring drawings.

29.04.00	Caution name plate "Caution Live Terminals" shall be provided at all points where the terminals are likely to remain live and isolation is possible only at remote end.
30.00.00	**METAL ENCLOSED NON SEGREGATED PHASE BUSDUCT(AIR INSULATED)**
30.01.00	Three phase and neutral metal enclosed non segregated phase busduct assemblies shall be supplied for incoming connections from the transformers to the switch boards and inter connecting sections between switch boards, wherever applicable. The rating of the incoming and interconnecting busducts shall be same as the rating of the switchboard.
30.02.00	The enclosure shall be made of minimum 3 mm thick Aluminium alloy. The section of the busduct shall be rectangular. The design of the busduct enclosures shall be of sturdy construction such that it will withstand the internal or external forces resulting from the various operating conditions.
30.03.00	The entire busduct shall be designed for dust, vermin and weather proof construction. A suitable Aluminium sheet flange-protection hood shall be provided to cover all outdoor busduct enclosure joints to facilitate additional protection against rain water ingress. All horizontal runs of busducts shall have a suitable sloped enclosure top to prevent retention of water for both indoor and outdoor portion of busducts. Busduct enclosure shall have a degree of protection of IP-55.
30.04.00	The inside of the bus enclosure may be treated with black paint to enable efficient heat dissipation. The matt paint used shall be suitable for temperature experienced during continuous loading of the bus conductor. The busduct exterior paint shade shall be RAL 5012.
30.05.00	Flexible expansion joints for the enclosure shall be provided wherever deemed necessary by the Contractor. Necessary bonding shall be provided at the expansion joints if made of insulating materials.
30.06.00	Enclosures shall be provided with flanged ends with drilling dimensions to suit the flanges at the switchgear and transformer terminals. Any adapter boxes required for this purpose are in the Contractor's scope of supply. The flanges shall be provided with gaskets, nuts, bolts, etc. Details of the flanges provided on transformer ends will be furnished to the successful Contractor.
30.07.00	Suitable Inspection covers shall be provided for periodic inspection of insulators. Handle shall be provided on each inspection cover to facilitate easy lifting.
30.08.00	The EPDM / Neoprene gaskets shall be provided so as to satisfy the operating conditions imposed by temperature, weathering, durability etc. Flange gaskets shall be provided at the equipment terminal connections.
30.09.00	Necessary earthing arrangement as applicable shall be provided with clamps to receive station earthing bus. All accessories and hardware required for the earthing arrangement shall be provided by the Contractor. This shall be a GI strip of adequate size, continuously running along the busduct and shall be earthed at both ends. Busduct enclosures shall be bolted type.

30.10.00	The material of the conductor shall be Aluminium. The minimum clearance in air between phase to phase, phase to neutral and phase to earth for the entire run of busduct shall be 25 mm The bus bars shall be rated in accordance with the service conditions and the rated continuous and short time current ratings calculated for specific application / specified elsewhere.
30.11.00	All steel structures required for busduct support shall be hot dip galvanized.
30.12.00	Space heaters shall be provided in the busduct wherever the manufacturer considers them necessary and recommends their provision for preventing harmful moisture condensation.
30.13.00	The space heaters shall be suitable for continuous operation on 240 V AC, 50 Hz single phase supply and shall be automatically controlled by thermostats. Necessary wiring upto junction boxes mounted on busduct and from junction boxes to switch boards shall be provided by the Contractor.
31.00.00	**BUS TRUNKING SYSTEM (SANDWICH TYPE BUSDUCT)**
31.01.00	Three phase Bus trunking system conforming to IEC 60439 (Parts 1 & 2) / IS 8623 (Parts 1 & 2) shall be provided for connecting the Main and Standby DG sets to Unit Emergency Switchgears as indicated in the BOQ.
31.02.00	The enclosure shall be made of CRCA (1.6mm thick) / GI (1.6mm thick) / Aluminium (2.5mm thick) sheet. The design of the bus duct enclosure shall be of sturdy construction such that it will withstand the internal or external forces resulting from the various operating conditions.
31.03.00	The entire bus duct shall be designed for dust, vermin and weather proof construction. A suitable aluminium sheet flange-protection hood shall be provided to cover all outdoor bus duct enclosure joints to facilitate additional protection against rain water ingress. All horizontal runs of bus ducts shall have a suitable sloped enclosure top to prevent retention of water for both indoor and out door portion of busducts. Busduct enclosure shall have a degree of protection of IP-55.
31.04.00	The busduct exterior paint shade shall be RAL 5012.
31.05.00	Enclosures shall be provided with flanged ends with drilling dimensions to suit the flanges at the switchgear and DG terminals. Any adapter boxes required for this purpose are in the contractor's scope of supply. The flanges shall be provided with gaskets, nuts, bolts, etc.
31.06.00	EPDM / Neoprene gaskets shall be provided so as to satisfy the operating conditions imposed by temperature, weathering, durability etc. Flange gaskets shall be provided at the equipment terminal connections.
31.07.00	Necessary earthing arrangement as applicable shall be provided with clamps to receive station earthing bus. All accessories and hardware required for the earthing arrangement shall be provided by the contractor. This shall be a GI strip of adequate size, continuously

running along the busduct and shall be earthed at both ends. busduct enclosures shall be bolted type.

31.08.00 The material of the conductor shall be high conductivity aluminum / copper. The busbars shall be rated in accordance with the service conditions and the rated continuous and short time current ratings specified elsewhere.

31.09.00 All steel structures required for busduct support shall be hot dip galvanized.

31.10.00 Space heaters shall be provided in the busduct wherever the manufacturer considers them necessary and recommends their provision for preventing harmful moisture condensation.

31.11.00 The space heaters shall be suitable for continuous operation on 240 V AC, 50 Hz single phase supply and shall be automatically controlled by thermostats. Necessary wiring upto junction boxes mounted on busduct and from junction boxes to switch boards shall be provided by the contractor.

32.00.00 LIGHTING / WELDING TRANSFORMERS

Each AC Lighting Distribution Board (LDB) / Welding DB shall be fed from 415V / 415V, 100kVA isolating transformer. The lighting / welding transformer may, preferably, be located inside the LDB / Welding DB panel itself. Otherwise, the same shall be located by the side of respective LDB / Welding DB. Lighting / Welding transformers shall be dry type, natural air cooled with class B insulation or better. Impedance of lighting / Welding transformer shall be so selected that the fault level of lighting /Welding system shall be reduced to 3 to 5 KA. Lighting / Welding transformers shall be tested as per IS: 2026. Off-circuit tap changer with ± 2.5% and ± 5% tapping shall be provided. In case the transformers are not mounted inside the LDB panels, the same shall be housed in a separate 2 mm thick CR sheet steel enclosure with IP-42 degree of protection as per IS/IEC 60947. However, the transformer terminal box shall have IP-52 degree of protection.

33.00.00 PAINTING

All sheet steel work shall be pre-treated, in tanks, in accordance with IS: 6005. Degreasing shall be done by alkaline cleaning. Rust and scales shall be removed by pickling with acid. After pickling, the parts shall be washed in running water. Then these shall be rinsed in slightly alkaline hot water and dried. The phosphate coating shall be "Class-C" as specified in IS: 6005. The phosphated surfaces shall be rinsed and passivated. After passivation, Electrostatic Powder Coating shall be used. Powder should meet requirements of IS 13871 (Powder costing specification). Finishing paint shade for complete panels excluding end covers shall be RAL9002 & RAL5012 for extreme end covers of all boards, unless required otherwise by the Employer. The paint thickness shall not be less than 50 microns. Finished parts shall be suitably packed and wrapped with protective covering to protect the finished surfaces from scratches, grease, dirt and oil spots during testing, transportation, handling and erection.

34.00.00 GASKETS

The gaskets, wherever specified, shall be of good quality EPDM / Neoprene with good ageing, compression and oil resistance characteristics suitable for panel applications.

35.00.00 TEMPERATURE –RISE

The temperature rise of the horizontal and vertical busbars and main bus links including all power draw-out contacts when carrying 90% of the rated current along the full run shall in no case exceed 55^0 C with silver plated joints and 40^0C with all other types of joints over an outside ambient temperature of 50^0C. The temperature rise of the accessible parts/external enclosures expected to be touched in normal operation shall not exceed 20^0C. The temperature rise of manual operating means shall not exceed 10^0C for metallic & 15^0C for insulating material. Temperature rise for the busbars shall be carried out at 90% of the rated current. The above temperature rise limits are applicable for busducts also without any current derating.

36.00.00 DERATING OF EQUIPMENTS

The Contractor shall ensure that the equipment offered will carry the required load current at site ambient conditions specified and perform the operating duties without exceeding the permissible temperature as per Indian Standards / Specification. Continuous current rating at 50^0C ambient in no case shall be less than 90% of the normal rating specified.

The Contractor shall indicate clearly the derating factors if any employed for each component and furnish the basis for arriving at these derating factors duly considering the specified current ratings and ambient temperature of 50^0C.

37.00.00 PROTECTION CO-ORDINATION

It shall be the responsibility of the Contractor to fully coordinate the overload and short circuit tripping of the circuit breakers with the upstream and downstream circuit breakers / fuses / motor starters, to provide satisfactory discrimination. Further the various equipment supplied shall meet the requirements of Type 2 class of Co-ordination as per IS: 8544.

38.00.00 TESTS AND TEST REPORTS

38.01.00 **GENERAL**

(a.) All equipment to be supplied shall be of type tested design. The Contractor shall submit for Employer's approval the reports of all the type tests as listed in this specification and carried out not earlier than ten years prior to the date of bid opening. These reports should be for the tests conducted on the equipment similar to those proposed to be supplied under this contract and the test(s) should have been either conducted at an independent laboratory or should have been witnessed by a client.

(b.) In case the Contractor is not able to submit report of the type test(s) conducted not earlier than ten years prior to the date of bid opening, or in case the type test report(s) are not found to be meeting the specification requirements, the Contractor shall conduct all such tests under this contract at no additional cost either at third party lab or in presence of client/Employer's representative and submit the reports for approval.

(c.) All routine tests as per the specification and relevant standards shall be carried out.

38.02.00 The following type test certificates on each type & rating of LT Switchgear and MCC panels shall be submitted.

1)	Switchgear / MCC panels of each rating

	a)	Short time withstand test.	
	b)	Temperature rise test.	
	c)	Degree of protection test	
2)	Circuit breaker of each rating		
	a)	Test sequence 1	
		-	Dielectric properties.
		-	Mechanical operation and operational performance capability
		-	Verification of dielectric withstand.
		-	Verification of temperature-rise
	b)	Combined test sequence (With Circuit breakers mounted inside the Switchgear panel)	
		-	Rated short-time withstand current
		-	Rated service short-circuit breaking capacity
		-	Verification of dielectric withstand
		-	Verification of temperature-rise
3)	MCC modules of any three ratings, as selected by the Employer, for class - II protection Co-ordination.		
4)	Test for single phasing protection feature on 3 nos. bimetallic thermal overload relay selected by Employer. The relay shall be tested for compliance with manufacturer's printed / declared characteristic curve.		

38.03.00 For the following equipment the contractor shall submit the reports of all the type tests as per applicable standards and carried out not earlier than ten years prior to the date of bid opening. These reports should be for the tests conducted on the equipment similar to those proposed to be supplied under this contract and the test(s) should have been either conducted at an independent laboratory or should have been witnessed by a client. In case the Contractor is not able to submit report of the type test(s) conducted within last ten years from the date of bid opening, or in case the type test report(s) are not found to be meeting the specification requirements, the Contractor shall conduct all such tests under this contract at no additional cost to the Employer either at third party lab or in presence of client/Employer's representative and submit the reports for approval.

(a.) NUMERICAL RELAYS

(b.) LOCAL PUSH BUTTON STATION

(c.) LOCAL MOTOR STARTER

(d.) MCCB

38.04.00 Type test reports for the following tests on the model of the Numerical relays, Ethernet switches shall be submitted for Employer's review.

S. No.	TEST ITEMS	Standard
1	Dimensions of structure and visual inspection	IEC 60297-3-101
2	Functional requirements:	Relevant IEC 60255-100 series
	– Steady-state simulation	
	– Dynamic simulation	
3	Product safety requirements	IEC 60255-27
	(including the dielectric tests and thermal short time rating)	
4	EMC requirements:	IEC 60255-26
	– Emission	
	– Immunity	
5	Energizing quantities:	
	– Burden	N/A
	– Change of auxiliary energizing quantity	IEC 60255-11
6	Contact performance	N/A
7	Communication requirements	Relevant IEC protocol standards
8	Climatic environmental requirements:	IEC 60068-2-14, IEC 60068-2-1, IEC 60068-2-2, IEC 60068-2-78, IEC 60068-2-30, IEC 60255-27
	– Cold	
	– Dry heat	
	– Change of temperature	
	– Damp heat	
9	Mechanical requirements: – Shock	IEC 60255-21-1, IEC 60255-21-2, IEC 60255-21-3
	– Vibration	
	– Bump	
	– Seismic	
10	Enclosure protection	IEC 60529, IEC 60255-27

38.05.00 The type test reports once approved for any projects shall be treated as reference. For subsequent projects of NTPC, an endorsement sheet will be furnished by the manufacturer confirming similarity and "No design Change". Minor changes if any shall be highlighted on the endorsement sheet.

38.06.00 All routine tests as per the specification and relevant standard IS 8623 shall be carried out.

38.07.00 An indicative lists of tests / checks is mentioned as QA chapter. However, the manufacturer is to furnish a detailed Quality Plan indicating the practice and procedure along with relevant supporting documents.

38.08.00 All procedures for type tests shall be approved by Employer before commencement of type tests. However, the following points may be specifically noted.

1)	For temperature rise tests, the connection arrangement between the source and the test equipment shall be such that the temperature gradient in the

	connection piece of cable at a distance of one meter away from the test equipment shall be restricted to 5^0C.
2)	Milli-Volt drop test shall be done on switching devices before and after the type tests.
3)	Bolt tightness of busbar joints shall be checked with torque wrench before and after short time rating tests on the circuit breaker and MCC panels.

38.09.00 Routine checking to observe compliance to degree of protection, first numeral, on switchboard enclosures and busbar chambers shall be as under :

1) IP -4 X	It shall not be possible to insert a one mm dia. Steel wire into the enclosure from any direction, without using force.
2) IP-5X	It shall not be possible to insert a thin sheet of paper under gaskets and through enclosure joints.

39.00.00 ERECTION / INSTALLATION OF SWITCHBOARDS AND OTHER EQUIPMENTS

39.01.00 Each equipment shall be installed in a neat, workman-like manner so that it is levelled, plumbed, squared and properly aligned and oriented. Tolerances shall be as established in Contractor's drawings or as stipulated by Employer. No equipment shall be permanently fixed down to foundations until the alignment has been checked and found acceptable by the Employer.

39.02.00 Contractor shall furnish all supervision, labour, tools, equipment, rigging materials, bolts, wedges, anchors, etc.., in proper time, required to completely install, test and commission the equipment.

39.03.00 Manufacturer's and Employer's instructions and recommendations shall be correctly followed in handling, setting, testing and commissioning of all equipment.

39.04.00 Contractor shall move all equipment into the respective rooms through the regular door or openings specifically provided for this purpose. No part of the structure shall be utilised to lift or erect any equipment without prior permission of Engineer.

39.05.00 All switchboards shall be installed in accordance with Indian Standard, IS: 3072, and Employer's instructions.

39.06.00 Switchboard panels shall be installed on concrete floor or supported on steel channel / edge angle in concrete trenches. The Contractor shall provide steel insert plates in the concrete floor and / or steel channels / edge angle on the trenches as applicable. The base frame of switchboards shall be welded to the insert plates by the Contractor. The Contractor shall be required to install and align the panels using suitable metallic shims before welding the base frame. In joining shipping sections of switchboards together, adjacent housing of panel sections or flanged throat sections shall be bolted together after alignment has been completed.

39.07.00 Contractor shall take utmost care in handling instruments, relays and other delicate mechanisms. Wherever the instruments and relays are supplied separately they shall be mounted only after the associated panels have been erected and aligned. the blocking materials employed for safe transit of instruments and relays shall be removed after ensuring that panels have been completely installed and no further movement of the same would be necessary. Any damage shall be immediately reported to Engineer.

39.08.00 Equipment furnished with finished coats of paint shall be touched up by Contractor if their surface is spoiled or marred during erection / commissioning.

39.09.00 The room and floor finishing work would be done after erection of the panels and the Contractor shall suitably cover up the panels to protect them from injury and marring of finish.

40.00.00 COMMISSIONING CHECKS / TESTS

40.01.00 After installation of panels, power and control wiring and connections, Contractor shall perform operational tests on all switchboards, to verify proper operation of switchboards / panels and correctness of all equipment in each and every respect.

40.02.00 The Contractor shall carry out the following commissioning checks, in addition to other checks and tests recommended by the manufacturers.

40.03.00 GENERAL

(a.) Check name plate details according to the approved drawings.

(b.) Check for physical damage.

(c.) Check tightness of all bolted connections, by torque wrench.

(d.) Check earth connections.

(e.) Check cleanliness.

(f.) Check all moving parts for proper lubrication.

40.04.00 Circuit Breakers

(a.) Check alignment of breaker truck for free movement.

(b.) Check correct operation of shutters.

(c.) Check control wiring for correctness of connections, continuity And IR values.

(d.) Manual operation of breakers completely assembled.

(e.) Closing /opening operation, manually and electrically.

(f.) Trip free and anti-pumping operation.

(g.) I.R. values of contacts.

(h.) Contact resistance.

(i.) Check on spring charging motor, correct operation of limit switches and time or charging.

(j.) All functional checks

(k.) Breaker closing and tripping time, if required.

40.05.00 Current Transformers

(a.) Visual inspection.

(b.) IR Value

(c.) Ratio check.

(d.) Magnetising current.

(e.) Wiring connection.

(f.) Spare CT cores, if any, to be shorted and earthed

40.06.00 Voltage Transformers

(a.) Visual inspection.

(b.) IR Value

(c.) Ratio check

(d.) Magnetising current

(e.) Line connection as per connection diagram

40.07.00 Cubicle Wiring

(a.) Check all switch developments

(b.) Each wire shall be traced by continuity tests and it shall be ensured that the wiring is as per relevant drawing. All inter-connections between panels / equipment shall be similarly checked.

(c.) IR Value of all the wires shall be checked to earth.

(d.) Functional checking of all control circuit e.g., closing, tripping, control, interlock, supervision and alarm circuit.

40.08.00 Relays

1. Check connections and wiring.
2. IR Value to be checked for
   a) all terminals to body.
   b) AC to DC terminals.
3. Check operating characteristics by secondary injection.

4. Check minimum pick up voltage of DC coils.
5. Check operation of electrical / mechanical targets.
6. Relay settings.
7. Check CT and VT connections with particular reference to their polarities.

40.09.00 Meters

(a.) Visual inspection.

(b.) Check IR Value of all insulated partitions.

(c.) Check CT and VT connections with particular reference to their polarities for power type meters.

(d.) Calibration.

41.00.00 AC MODULES DESCRIPTION

41.01.00 **Module type DAE (Circuit Breaker Module)**

(a.) One (1) Triple-pole circuit breaker, complete with all accessories and power operated mechanism, as specified.

(b.) Three (3) Current transformers for Protection and metering.

(c.) One (1) DC isolating Switch

(d.) Six (6) HRC Control fuses.

(e.) Numerical relay for the following:

- Short Circuit Protection
- Earth Fault Protection
- Over Load protection
- Energy Metering
- Current and Voltage metering
- Trip Circuit Supervision
- CB Monitoring
- Synchronizing Check feature

41.02.00 **Module Type DAET (Circuit Breaker Incomer From Transformer)**

Similar to module type DAE; but with additional PS Class Current transformers for Restricted Earth Fault Protection. The Numerical relay shall have provision for REF protection in addition to the features listed against module type DAE.

41.03.00 **Module Type CC (Contactor Changeover Between Two In Coming Supplies)**

(Note: Main and Reserve incomers shall be housed in separate draw-out modules, located in different panels.)

The draw-out modules shall be provided with service position limit switch having 2 NO+2NC contacts.

Main Incomer

One (1) Triple pole load break isolating switch .

One (1) Triple pole contactor with coil suitable for 415 V AC.

Two (2) Auxiliary contactors with coil suitable for 415 V AC.

One (1) Indicating lamp with resistor and coloured lens suitable for 415 V AC.

Three (3) HRC control fuses.

Reserve Incomer

One (1) Triple pole load break isolating switch

One (1) Triple pole contactor with coil suitable for 415 V AC.

One (1) Indicating lamp with resistor and coloured lens suitable for 415 V AC.

Two (2) HRC control fuses.

41.04.00 **Module Type CS (AC Control Supply Module)**

(Note: Module type CS will be of non-draw-out type)

Two (2) 415/110 V control transformers.

Four (4) 110V auxiliary relays.

Two (2) Earth links.

Eight (8) HRC Control fuses.

Two (2) Selector switches

41.05.00 **Module Type DG (Circuit Breaker Incomer From DG Set)**

(a.) One (1) Triple-pole circuit breaker, complete with all accessories and power operated mechanism, as specified.

(b.) Three (3) Current transformers for protection & metering.

(c.) One (1) DC isolating Switch

(d.) Six (6) HRC control fuses

(e.) Numerical relay for the following:

- Differential protection

- Over Load protection
- Reverse Power Protection
- DG Neutral displacement
- Energy Metering
- Current and Voltage metering
- DG Monitoring

41.06.00 **Module Type E/E1/E2 (Switch Fuse Module/MCCB)**

(a) One (1) Triple pole switch-fuse unit with three pole isolating switch and three / one / two HRC fuses for E/E1/E2 modules, respectively.

(b) One (1) Neutral link.
(c) One (1) 3 pole MCCB (for rating 100A and above)

41.07.00 **Module Type G1 (VT Module with Under Voltage / No Volt Relay)**

(a.) Three (3) 415/√3 / 110/√3 V single phase voltage transformers, mounted on a common draw-out chassis

(b.) Three (3) HRC fuses for VT primary.

(c.) Three (3) HRC control fuses.

41.08.00 **Module Type H (Isolating Switch Module)**

(a) One (1) Triple pole load break isolating switch

(b) One (1) Neutral link

41.09.00 **Module type K1 (Non Reversible Motor Rated Below 30 kW Controlled from MCC)**

(a) One (1) Triple pole fuse switch unit with three pole load break isolating switch and three HRC fuses.

(b) One (1) Triple pole contactor.

(c) One (1) Bimetallic thermal overload relay with single phasing preventer. For motor with high starting time, heavy duty overload relay shall be provided.

(d) Two (2) Push buttons.

(e) Three (3) Indicating lamps with resistors and coloured lenses.

(f) One (1) HRC control fuse.

(g) One (1) Control link.

41.10.00 **Module Type K11 (Non reversible Motor Rated 30kW to 200kW Controlled from MCC)**

Similar to module type K1 but with the following additions:

One (1) Current transformer for metering.

One (1) Ammeter

One (1) Single-pole switch and fuse for motor space heater.

41.11.00 **Module type DK2 (Non Reversible Motor rated below 30kW Controlled from DDCMIS)**

(a) One (1) Triple pole switch fuse unit with three pole load break Isolating switch and three HRC fuses.

(b) One (1) Triple pole contactor.

(c) One (1) Bimetallic thermal overload relay with single phasing preventor. Modules marked with * (DK2* / PK2*) shall not have this relay. For motor with high starting time, heavy duty overload relay shall be provided.

(d) Three (3) Indicating lamps with resistors and coloured lenses.

(e) One (1) HRC control fuse.

(f) One (1) Control link

(g) One (1) Auxiliary contactor

(h) Two (2) Coupling relays suitable for 24V DC.

(i) One (1) digital energy meter with analog output of current (4-20 mA) for CHP dust suppression motors.

41.12.00 **Module Type DK21 (Non Reversible Motor rated 30kW to up to 110KW (* See Remark) controlled from DDCMIS).**
(*) Remark : For CHP Motors –upto 160 KW

(a) Similar to module type DK2 but with the following additions :

(b) Three (3) Current transformers for metering.

(c) One (1) Ammeter (for motors of rating ≥ 30kW & < 110kW)

(d) One (1) Single-pole switch and fuse for motor space heater.

(e) One (1) Digital Energy Meter with Analog output of Current (4-20 mA) (for motors of rating ≥ 30kW & < 110kW)

41.13.00 **Module Type DN1 (Reversible Motor Controlled from DDCMIS)**

(a.) One (1) Triple pole fuse switch unit with three pole load break solating switch and three HRC fuses.

(b.) Two (2) Triple pole mechanically interlocked, forward / reverse contactors.

(c.) One (1) Bimetallic thermal overload relay with single phasing preventor.

(d.) One (1) Indicating lamp with resistor and coloured lens.

(e.) One (1) HRC control fuse

(f.) One (1) Control link

(g.) One (1) Auxiliary contactor

(h.) Two (2) Coupling relays suitable for 240V DC.

41.14.00 **Module Type VM (Voltmeter Module)**

(a.) Three (3) HRC fuses.

(b.) One (1) Voltmeter (0-500 V.)

(c.) One (1) Four position voltmeter selector switch

(d.) One (1) 415 V auxiliary contactor with 2 NO + 2 NC contacts.

(e.) One (1) Voltage transducer with output of 4-20mA between R & Y phases

41.15.00 **Module Type DM (Circuit Breaker (DDC /PLC Controlled) Motor Feeder for motor rated 110 KW & above (except for CHP motors).**

(a.) One (1) Triple-pole circuit breaker, complete with all accessories and power operated mechanism, as specified.

(b.) Three (3) Current transformers for Protection and metering.

(c.) One (1) DC isolating Switch

(d.) Six (6) HRC Control fuses.

(e.) One (1) Single-pole switch and fuse for motor space heater

(f.) Numerical relay for the following:

Short Circuit Protection (50)

Thermal Over Load protection(51I)

Earth fault Protection(50N)

Negative sequence Protection(46)

Restart inhibit protection(49)

Locked Rotor Protection

Energy Metering

Current and Voltage metering

Trip Circuit Supervision

CB Monitoring

42.00.00 **DC MODULES DESCRIPTION**

42.01.00 **Module Type -CH (Incomer)**

(a) One (1) Double pole, 250 V DC fuse -switch unit

42.02.00 **Module Type - DC**

(a.) One (1) Double pole 250V DC switch / circuit breaker with 2NO+2NC auxiliary contacts.

42.03.00 **Module Type - HD (DC Isolating Switch / Circuit - Breaker Module)**

(a.) One (1) Double pole , 250 V DC switch isolator / circuit breaker

42.04.00 **Module Type-S (DC Metering and Protection Module)**

(a.) One (1) Voltmeter, 0-300V DC

(b.) One (1) Three position voltmeter selector switch

(c.) One (1) Instantaneous under voltage relay (27) with a setting of 95% of 240V DC. The resetting ratio of relay should not be more than 1.05.

(d.) One (1) Instantaneous over voltage relay (59) which shall operate at 110% of 240 V DC. The resetting ratio of relay should not be less than 0.95.

(e.) One (1) Earth leakage relay having adjustable pick up range between 3 to 7mA. The relay shall be suitable for 240V / 50V DC and 240V AC auxiliary supply.

(f.) Two (2) Indicating lamps with resistors & coloured lenses, one each for 'Earth fault' and 'DC supply failure ' indications.

(g.) Three (3) HRC control fuses.

(h.) One (1) Neutral link

42.05.00 **Module Type -X (DC Isolating Switch Fuse Module)**

(a.) One (1) Double pole , 250 V DC fuse switch unit with two HRC fuses.

43.00.00 **SELECTION TABLES**

43.01.00 **Feeder Module, Other than Motor Selection Table (415 V AC)**

Sl. No.	Feeder Rating (Amp.)	Switch/MCCB Rating (Amp.)	Fuse Rating (Amp.)
1.	0-16	16	16
2.	17-32	32	32
3.	33-45	63	63

4.	46-63	63	63
5.	64-99	100	100
6.	100	100A MCCB	
7.	101-160	160A MCCB	
8.	161-250	250A MCCB	
9.	251-400	400A MCCB	
10.	401-1120 (Breaker)		
11.	1121-1680 (Breaker)		

43.02.00 **Motor Module Selection table**

Sl. No.	Motor rating kW	Max. Motor Amp.	Switch rating Amp.	Fuse rating Amp.	Contactor rating Amp.
1.	1.1-1.5	3.5	16	6/16	16
2.	1.6.3.0	7	32	20	16
3.	3.1-5.5	11	32	32	16
4.	5.6-7.0	14.4	63	50	32
5.	7.1-13.0	27.3	63	63	32
6.	13.1-24.0	45	125	80/100	63
7.	24.1-37.0	70	125	125	70 (upto 30kW) 100 (above 30kW)
8.	37.1-55.0	100	250	160	100 (upto 40kW) 160 (upto 55kW)
9.	55.1-80.0	150	250	200	200
10.	80.1-100	180	As per selected fuse	Suitable for type-II	225
12.	110.0-200.0	CIRCUIT BREAKER			

43.03.00

Switch Fuse Module Selection Table (220 V DC)

For all 220 V DC modules other than for motors, the ratings of switches fuses and cable termination shall be selected from the following table

Sl. No.	Feeder rating Amp.	Switch rating Amp.	Fuse rating Amp.
1.	0-6	10	6
2.	6-10	16	10
3.	10-14	16	16
4.	14-19	32	32
5.	19-32	32	32
6.	32-53	63	63
7.	53-81	100	100
8.	81-114	125	125
9.	114-125	250	250
10.	215-340	400	400
11.	340-560	600	600
12.	560-1000	Circuit Breaker	
13.	1000-1400	Circuit Breaker	

LEGEND	DESCRIPTION	LEGEND	DESCRIPTION
52	CIRCUIT BREAKER	64R	RESTRICTED EARTH FAULT PROTECTION
42	CONTACTOR	51G	STAND BY EARTH FAULT PROTECTION
S.A.	SURGE ARRESTOR	87T	3 PHASE BIASED TRANSFORMER DIFFERENTIAL PROTECTION
	CURRENT TRANSFORMER	27M	3 PHASE UNDER VOLTAGE PROTECTION FOR MOTOR TRIPPING
	CORE BALANCE CURRENT TRANSFORMER	27U	3 PHASE BUS UNDER VOLTAGE
	VOLTAGE TRANSFORMER	27N	NO VOLT PROTECTION FOR BUS
50	TRIPLE POLE IDMTL/DMT O/C PROTECTION	50BF	CIRCUIT BREAKER FAILURE PROTECTION
51	TRIPLE POLE INSTANTENIOUS O/C PROTN.	86	LOCKOUT FUNCTION
50N	IDMTL / DMT SENSITIVE E/F PROTECTION	3I	3 PHASE CURRENT MEASUREMENT
51N	INSTANTENIOUS E/F PROTECTION	Io	NEUTRAL CURRENT MEASUREMENT
49	THREE PHASE THERMAL O/L PROTN. WITH O/L ALARM & RESTART INHIBITE FUNCTION	3U	3 PHASE VOLTAGE MEASUREMENT
50L/R	STALLING / LOCKED ROTOR PROTECTION	Uo	RESIDUAL VOLTAGE MEASUREMENT
46	THREE PHASE NEGATIVE PHASE SEQUENCE PROTECTION	P	ACTIVE POWER MEASUREMENT
66	NUMBER OF START LIMITATION/REPATETIVE START PROTECTION	Q	REACTIVE POWER MEASUREMENT
2	TIME DELAY RELAY	E	ENERGY MEASUREMENT
60	FUSE FAILURE PROTECTION	PF	POWER FACTOR MEASUREMENT
		HZ	FREQUENCY MEASUREMENT
87M	3 PHASE MOTOR DIFFERENTIAL PROTECTION	HM	HOUR RUN METER

FOR TENDER PURPOSE ONLY

एनटीपीसी लिमिटेड
NTPC Limited
(A GOVERNMENT OF INDIA ENTERPRISE)

CLEARED BY					PROJECT
C	E	M	C&I	ES	STANDARD
					TITLE: LEGEND DETAILS

DRN	DGN	CHKD	APPD	DATE	SCALE	DRAWING No.	REV.
-				10/01/07	NA	0000-206-POE-A-003	0

LEGEND.DWG A4 210X297

This drawing and the design it covers are the property of NTPC Limited and must not be copied, loaned or exhibited either in part or in whole without written permission. Any contravention is liable for prosecution.

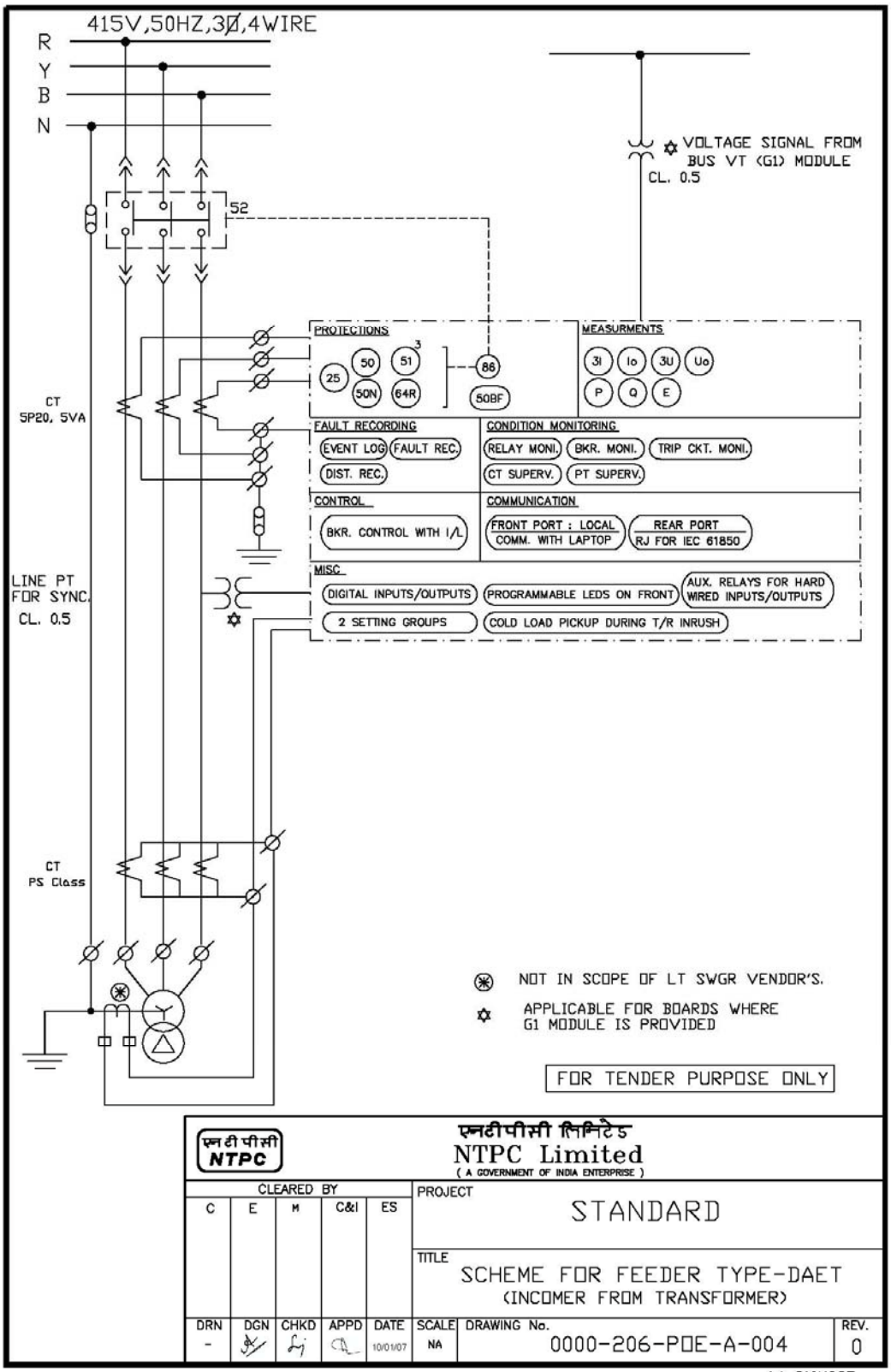

This drawing and the design it covers are the property of NATIONAL THERMAL POWER CORPORATION LTD. and must not be copied, loaned or exhibited either in part or in whole without written permission. Any contravention is liable for prosecution.

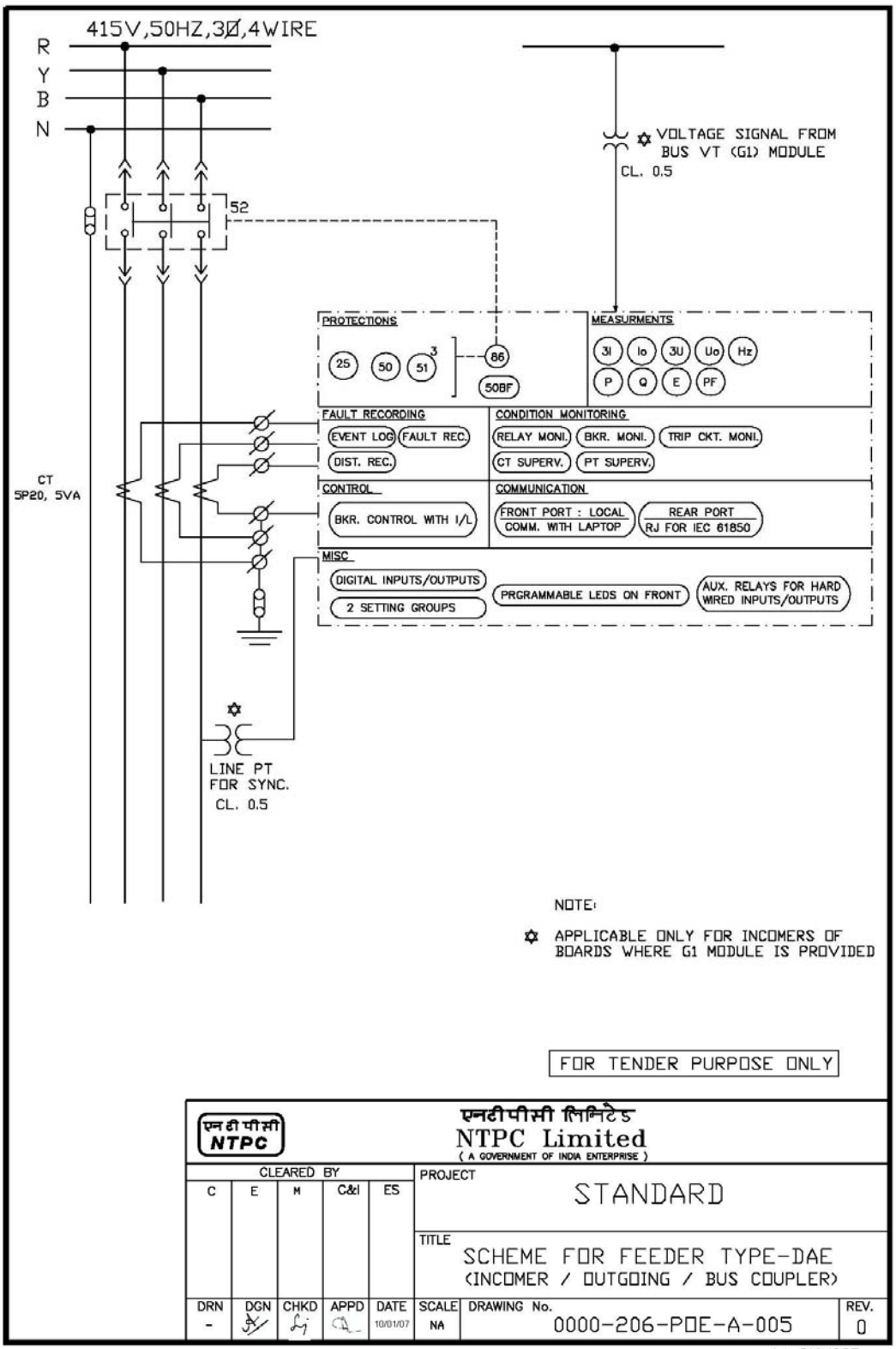

This drawing and the design it covers are the property of NATIONAL THERMAL POWER CORPORATION LTD. and must not be copied, loaned or exhibited either in part or in whole without written permission. Any contravention is liable for prosecution.

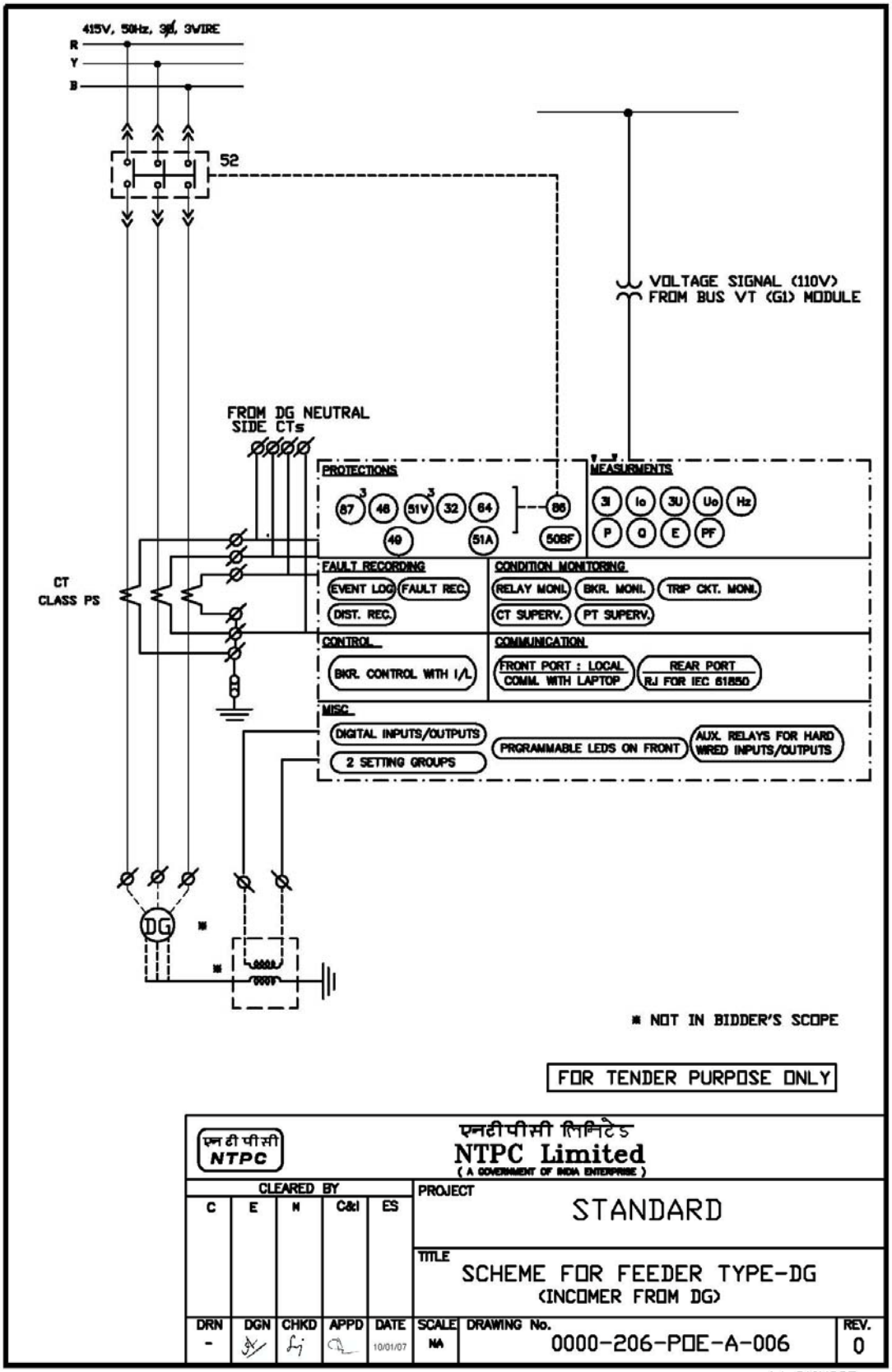

This drawing and the design it covers are the property of NATIONAL THERMAL POWER CORPORATION LTD. and must not be copied, loaned or exhibited either in part or in whole without written permission. Any contravention is liable for prosecution.

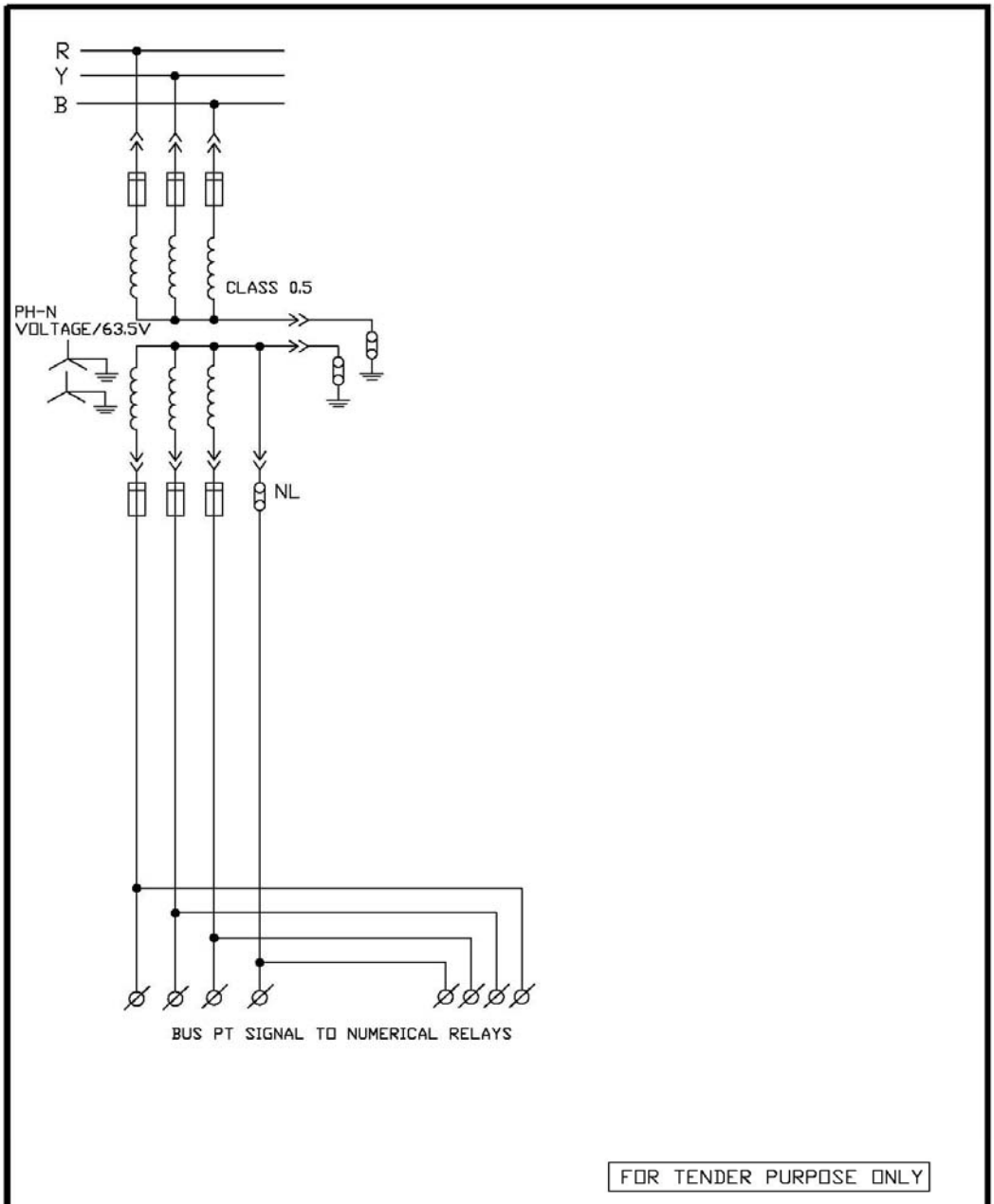

This drawing and the design it covers are the property of NATIONAL THERMAL POWER CORPORATION LTD. and must not be copied, loaned or exhibited either in part or in whole without written permission. Any contravention is liable for prosecution.

FOR TENDER PURPOSE ONLY

एनटीपीसी लिमिटेड
NTPC Limited
(A GOVERNMENT OF INDIA ENTERPRISE)

CLEARED BY					PROJECT				
C	E	M	C&I	ES	STANDARD				
					TITLE: SCHEME FOR MODULE TYPE – G1 (BUS PT)				
DRN	DGN	CHKD	APPD	DATE	SCALE	DRAWING No.			REV.
-				10/01/07	NA	0000-206-POE-A-007			0

A4 210X297

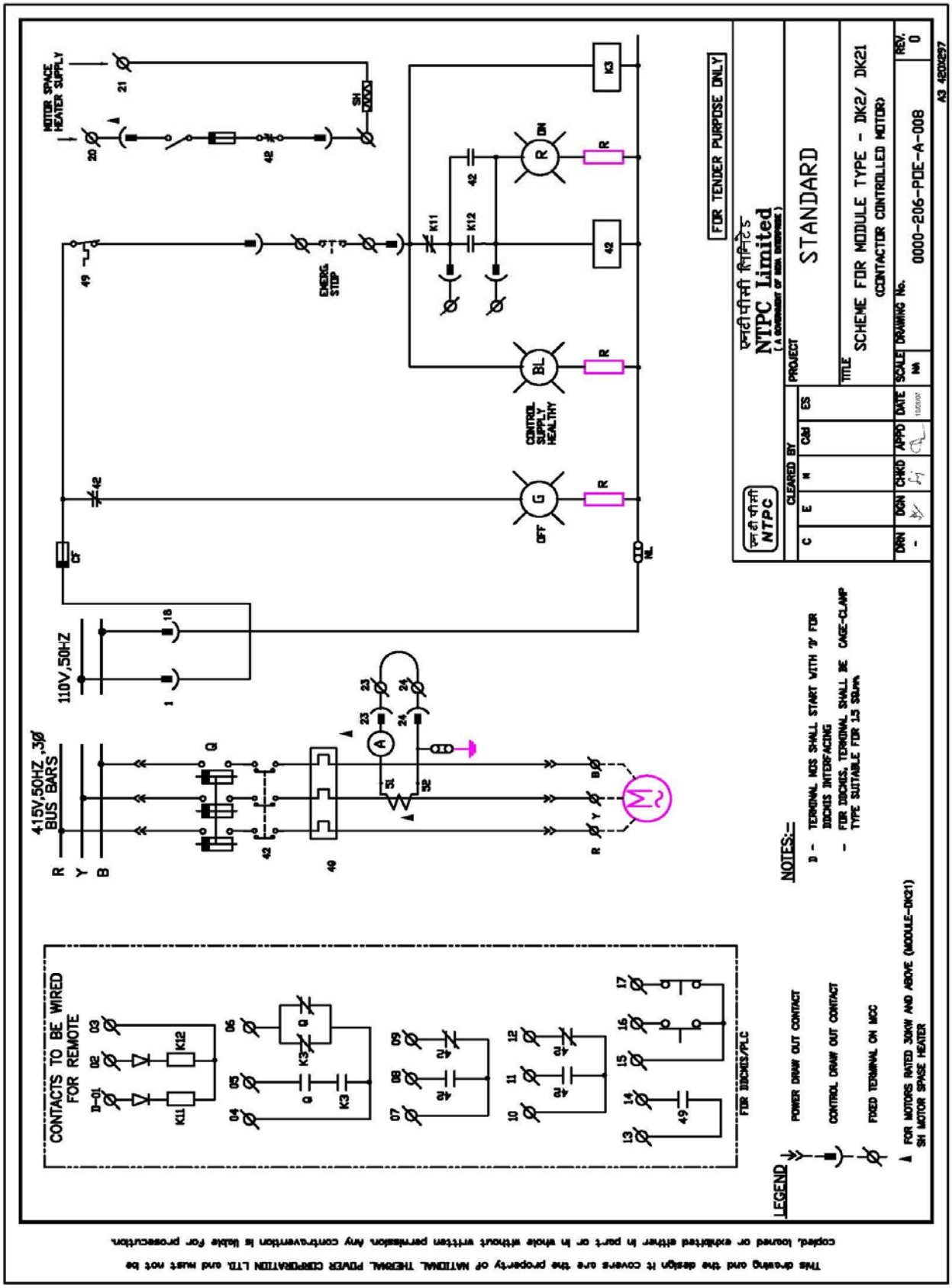

This drawing and the design it covers are the property of NATIONAL THERMAL POWER CORPORATION LTD. and must not be copied, loaned or exhibited either in part or in whole without written permission. Any contravention is liable for prosecution.

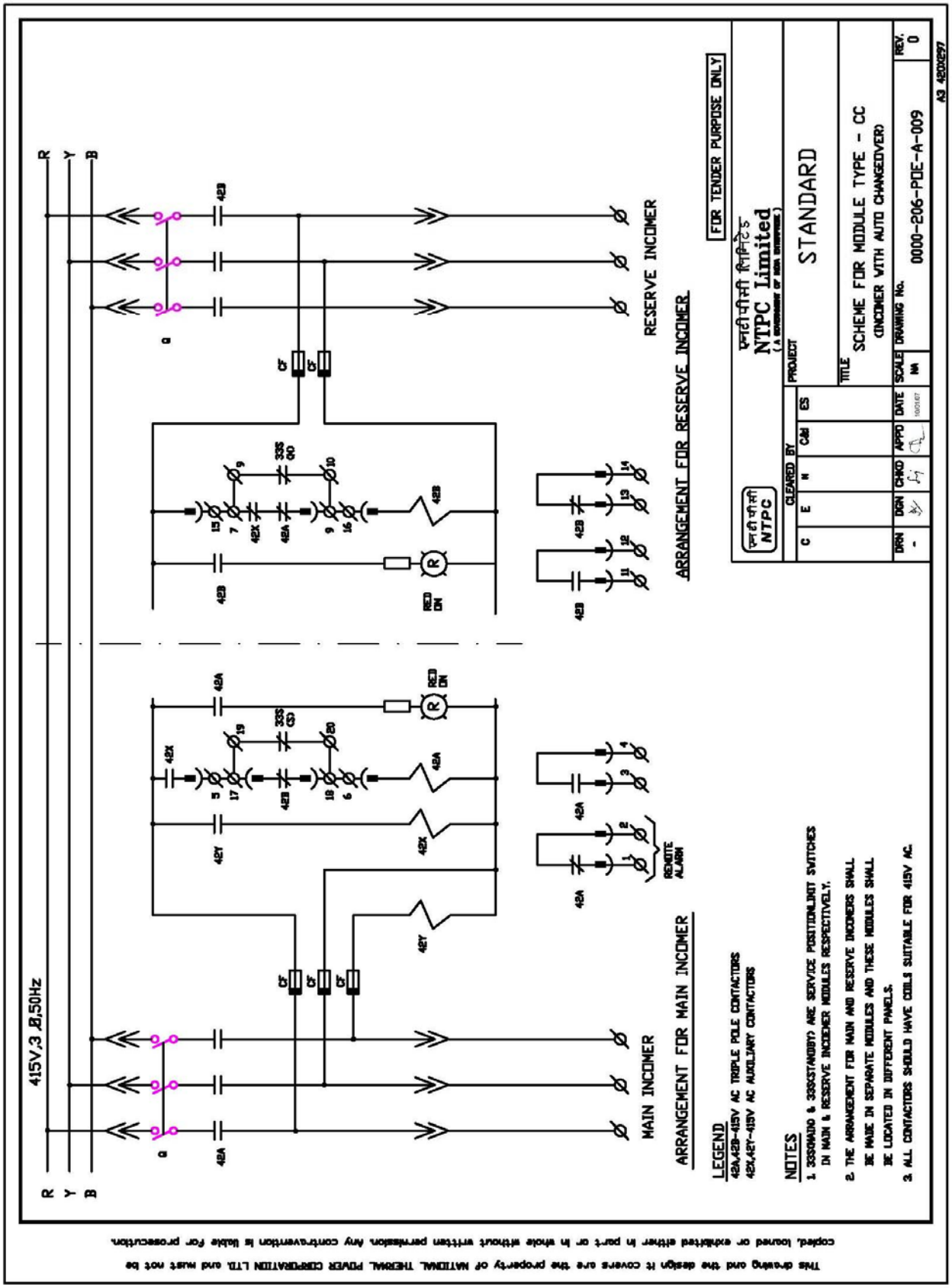
415V,3 Ø,50Hz
R
Y
B
MAIN INCOMER
RESERVE INCOMER
ARRANGEMENT FOR MAIN INCOMER
ARRANGEMENT FOR RESERVE INCOMER
REMOTE ALARM
RED ON
LEGEND
42A,42B-415V AC TRIPLE POLE CONTACTORS
42X,42Y-415V AC AUXILIARY CONTACTORS
NOTES
1. 33S(MAIN) & 33S(STANDBY) ARE SERVICE POSITION/LIMIT SWITCHES IN MAIN & RESERVE INCOMER MODULES RESPECTIVELY.
2. THE ARRANGEMENT FOR MAIN AND RESERVE INCOMERS SHALL BE MADE IN SEPARATE MODULES AND THESE MODULES SHALL BE LOCATED IN DIFFERENT PANELS.
3. ALL CONTACTORS SHOULD HAVE COILS SUITABLE FOR 415V AC.
FOR TENDER PURPOSE ONLY
एनटीपीसी लिमिटेड
NTPC Limited
(A GOVERNMENT OF INDIA UNDERTAKING)
PROJECT
STANDARD
TITLE
SCHEME FOR MODULE TYPE - CC
(INCOMER WITH AUTO CHANGEOVER)
DRAWING No.
0000-206-PDE-A-009
SCALE
NA
REV.
0
A3 420X297
This drawing and the design it covers are the property of NATIONAL THERMAL POWER CORPORATION LTD. and must not be copied, loaned or exhibited either in part or in whole without written permission. Any contravention is liable for prosecution.

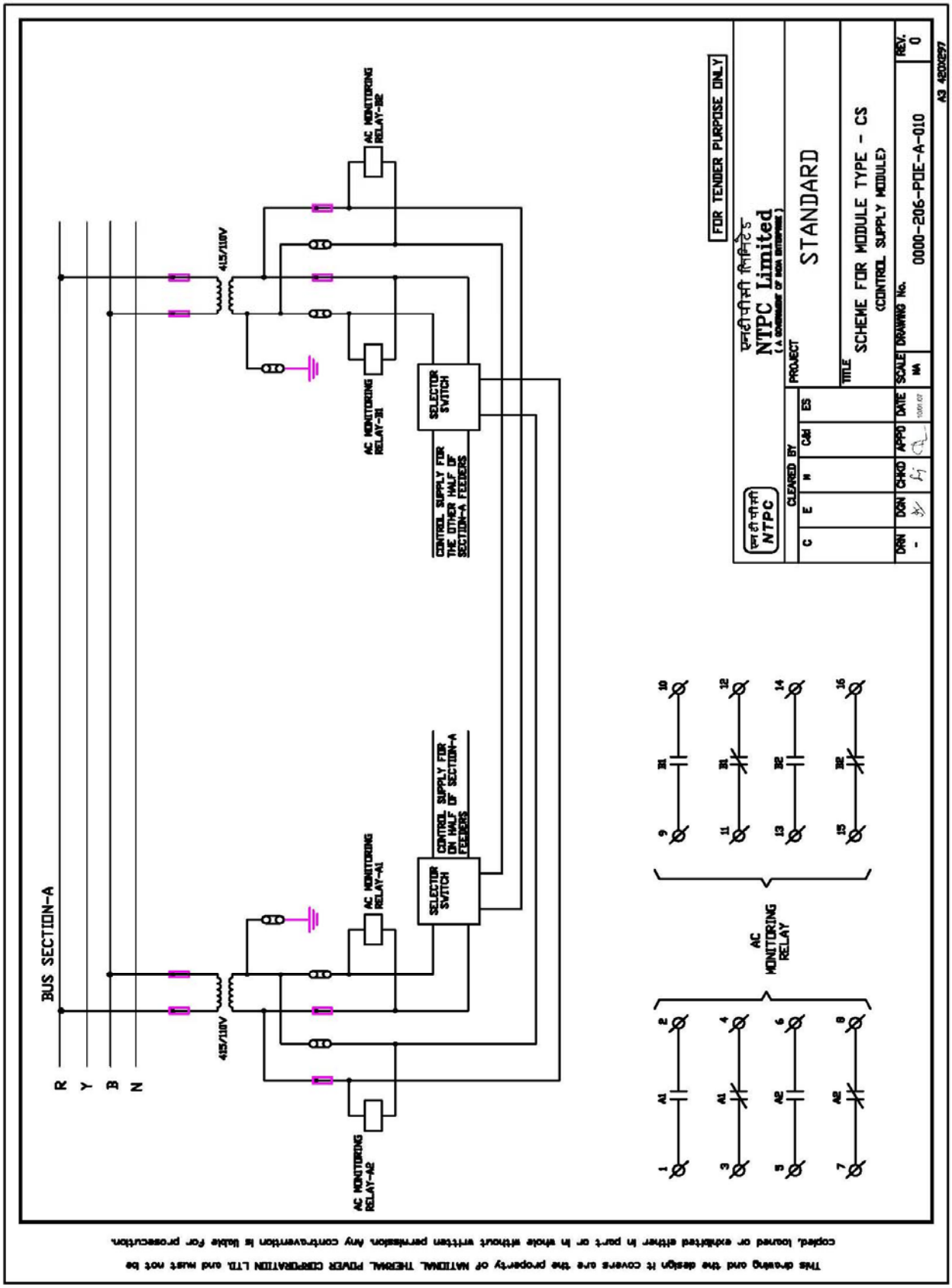

This drawing and the design it covers are the property of NATIONAL THERMAL POWER CORPORATION LTD. and must not be copied, loaned or exhibited either in part or in whole without written permission. Any contravention is liable for prosecution.

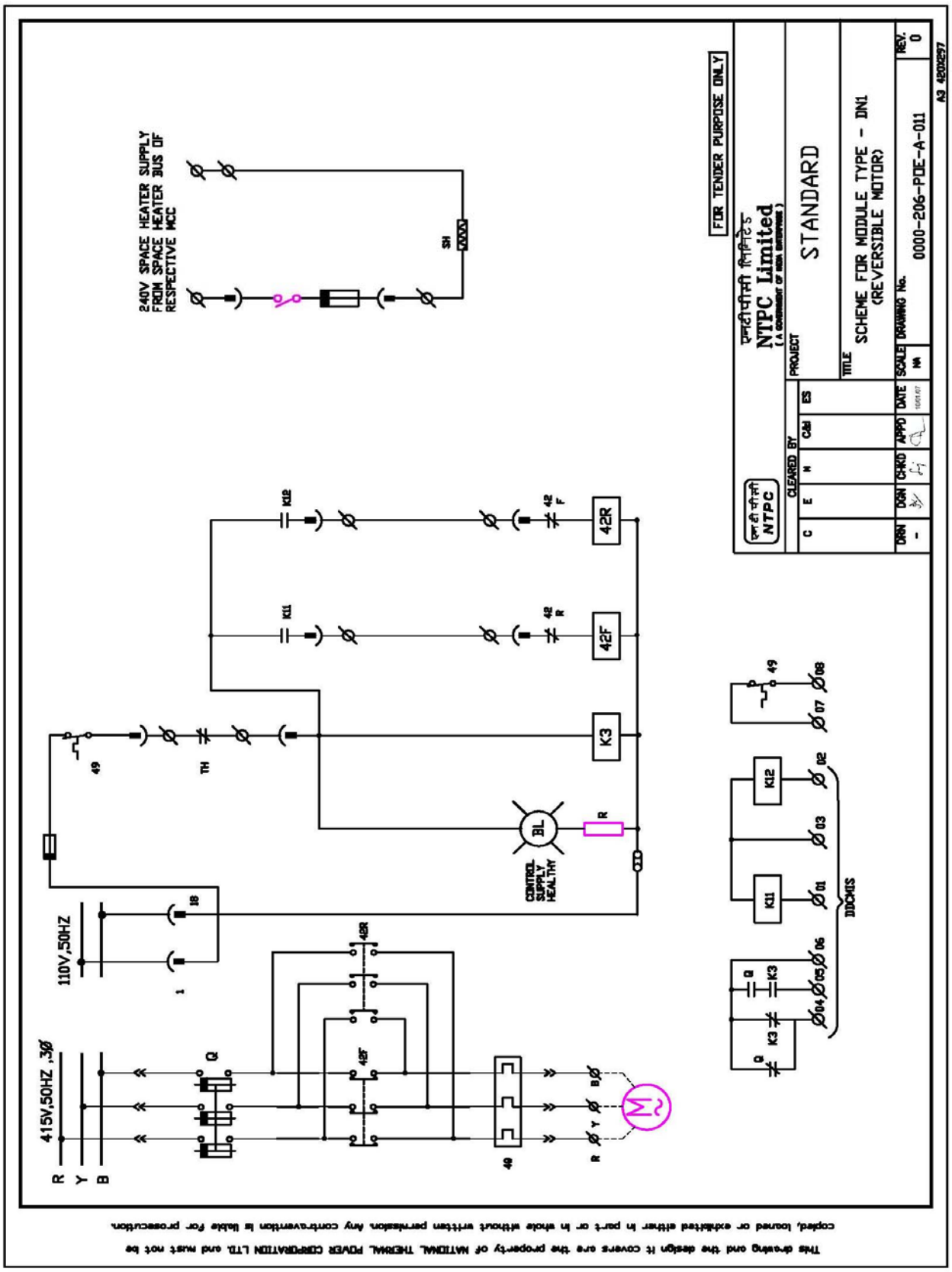

This drawing and the design it covers are the property of NATIONAL THERMAL POWER CORPORATION LTD. and must not be copied, loaned or exhibited either in part or in whole without written permission. Any contravention is liable for prosecution.

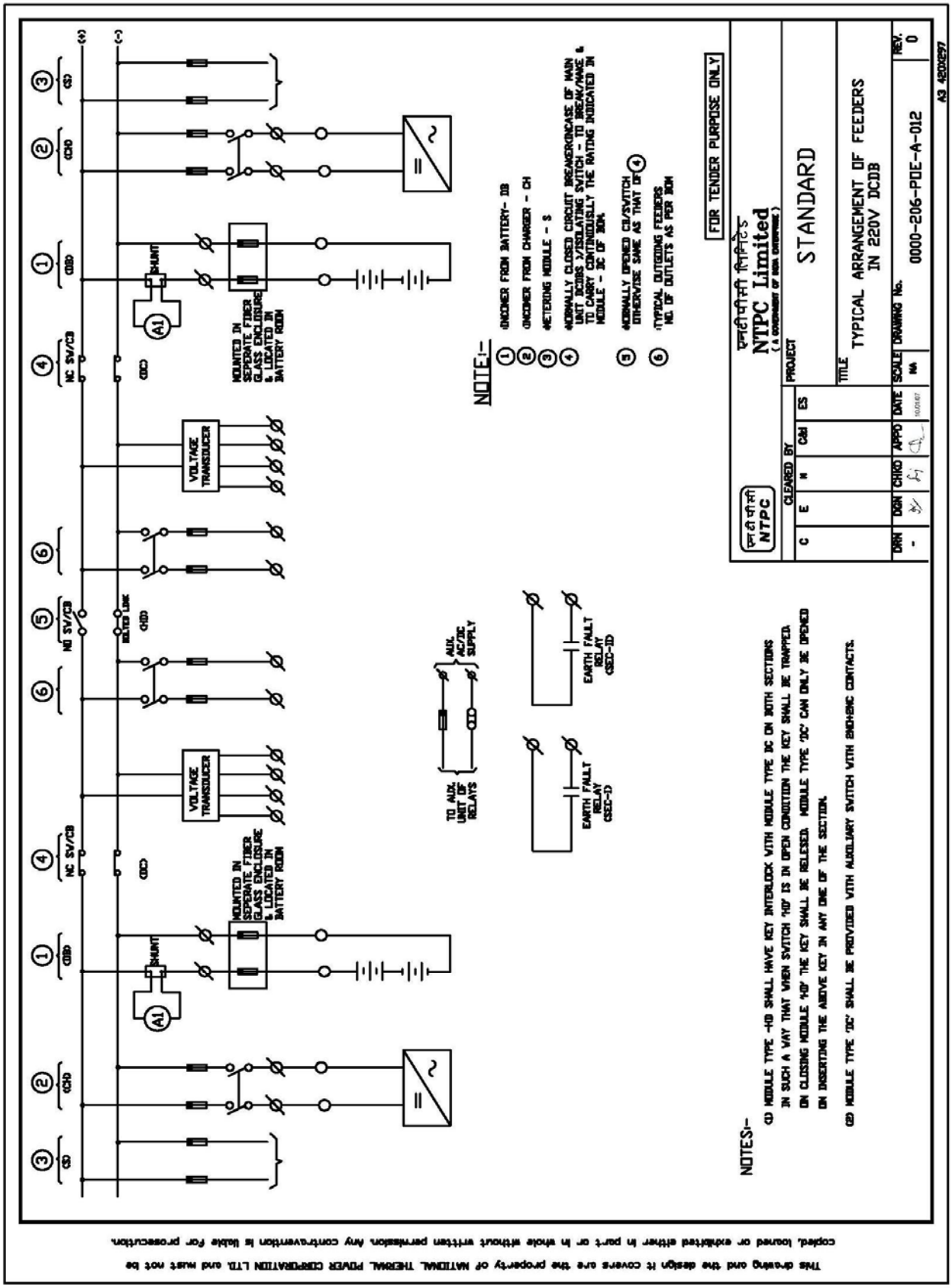

This drawing and the design it covers are the property of NATIONAL THERMAL POWER CORPORATION LTD. and must not be copied, loaned or exhibited either in part or in whole without written permission. Any contravention is liable for prosecution.

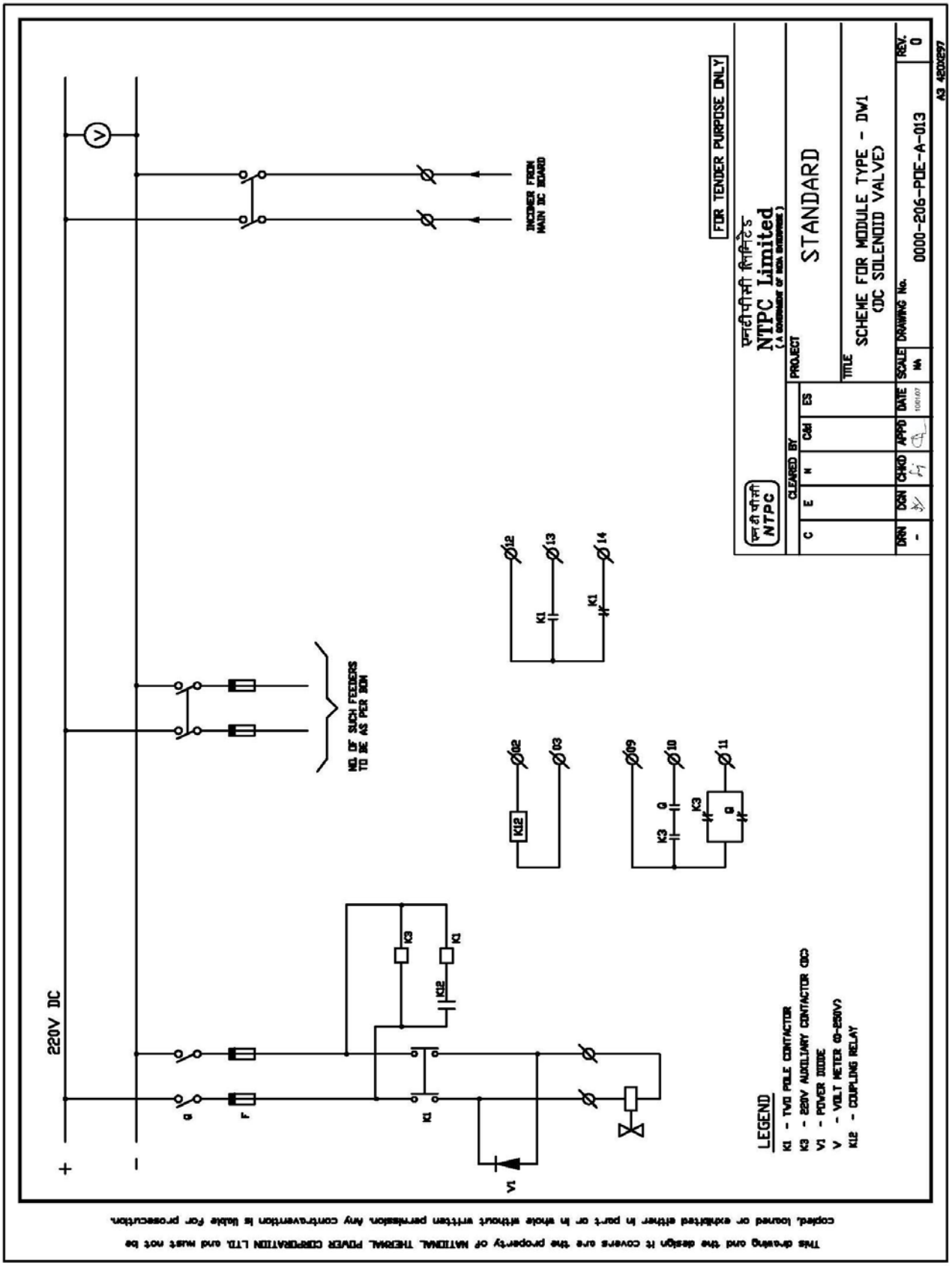

This drawing and the design it covers are the property of NATIONAL THERMAL POWER CORPORATION LTD. and must not be copied, loaned or exhibited either in part or in whole without written permission. Any contravention is liable for prosecution.

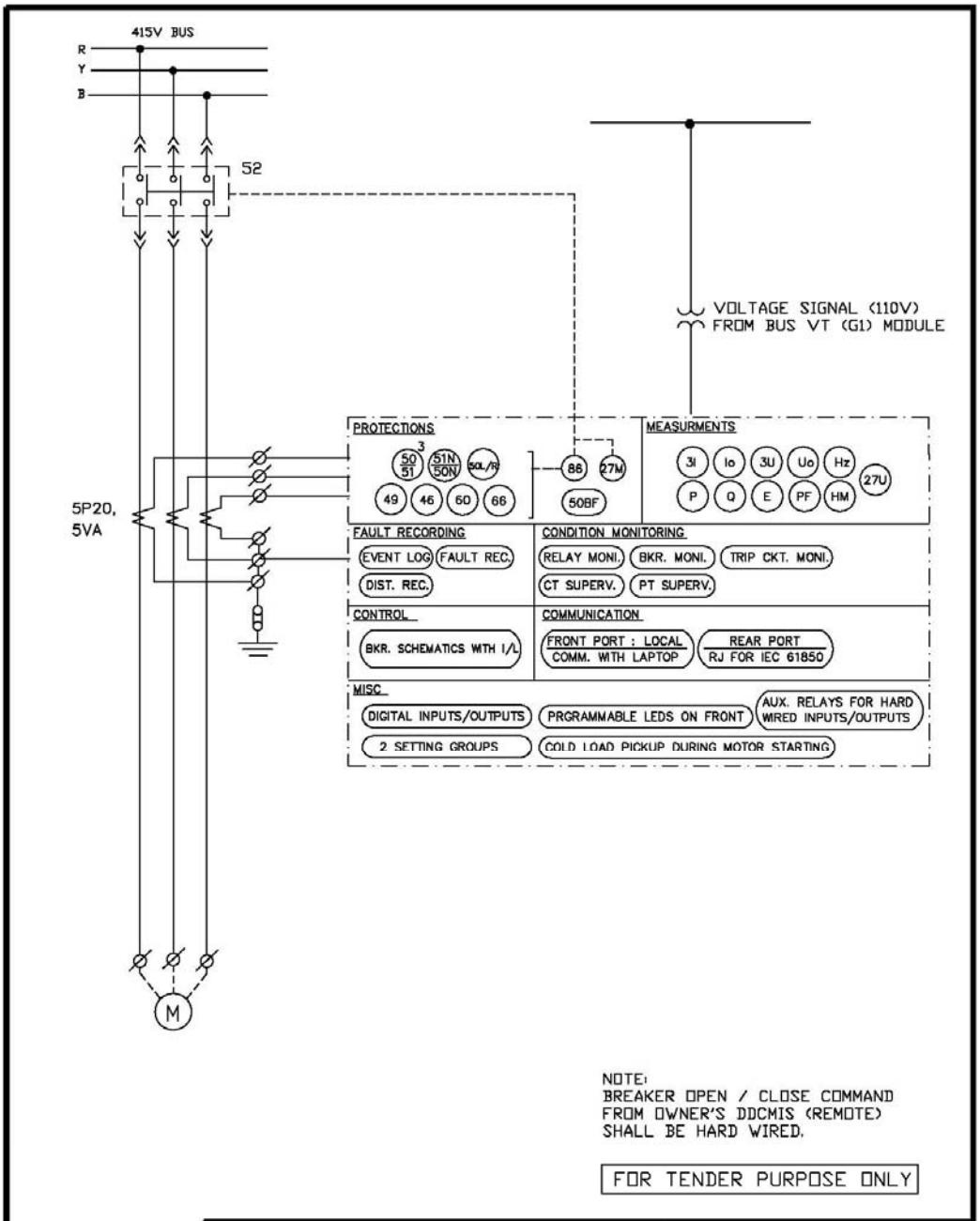

This drawing and the design it covers are the property of NATIONAL THERMAL POWER CORPORATION LTD. and must not be copied, loaned or exhibited either in part or in whole without written permission. Any contravention is liable for prosecution.

SUB–SECTION – B-07

MOTORS

CLAUSE NO.	TECHNICAL REQUIREMENTS

MOTORS

1.00.00 GENERAL REQUIREMENTS

1.01.00 For the purpose of design of equipment/systems, an ambient temperature of 50 deg. Centigrade and relative humidity of 95% (at 40 deg C) shall be considered. The equipment shall operate in a highly polluted environment.

1.02.00 All equipment shall be suitable for rated frequency of 50 Hz with a variation of +3% & -5%, and 10% combined variation of voltage and frequency unless specifically brought out in the specification.

1.03.00 Contractor shall provide fully compatible electrical system, equipment, accessories and services.

1.04.00 All the equipment, material and systems shall, in general, conform to the latest edition of relevant National and international Codes & Standards, especially the Indian Statutory Regulations.

1.05.00 Paint shade shall be as per RAL 5012 (Blue) for indoor and outdoor equipment.

1.06.00 The responsibility of coordination with electrical agencies and obtaining all necessary clearances for contractors equipment and systems shall be under the contractor scope.

1.07.00 Degree of Protection

Degree of protection for various enclosures as per IEC60034-05 shall be as follows:-

i)	Indoor motors	-	IP 54
ii)	Outdoor motors	-	IP 55
iii)	Cable box-indoor area	-	IP 54
iv)	Cable box-Outdoor area	-	IP 55

2.00.00 CODES AND STANDARDS

1)	Three phase induction motors	:	IS/IEC:60034
2)	Single phase AC motors	:	IS/IEC:60034
3)	Crane duty motors	:	IS:3177, IS/IEC:60034
4)	DC motors/generators	:	IS/IEC:60034
5)	Energy Efficient motors	:	IS 12615, IEC: 60034-30

CLAUSE NO.	TECHNICAL REQUIREMENTS
3.00.00	**TYPE**
3.01.00	**AC Motors:** a) Squirrel cage induction motor suitable for direct-on-line starting. b) Continuous duty LT motors upto 200 KW Output rating (at 50 deg.C ambient temperature), shall be Premium Efficiency class-IE3, conforming to IS 12615, or IEC:60034-30. c) Crane duty motors shall be squirrel cage Induction motor as per the requirement. d) Motor operating through variable frequency drives shall be suitable for inverter duty. Also these motors shall comply the requirements stipulated in IEC: 60034-18-41 and IEC: 60034-18-42 as applicable.
3.02.00	DC Motors Shunt wound
4.00.00	**RATING** (a) Continuously rated (S1). However, crane motors shall be rated for S4 duty, 40% cyclic duration factor. (b) Whenever the basis for motor or driven equipment ratings are not specified in the corresponding mechanical specification sub-sections, maximum continuous motor ratings shall be at least 10% above the maximum load demand of the driven equipment under entire operating range including voltage and frequency variations. (c) For BFP motors, starting MVA shall be restricted to meet requirements indicated in B-0. (d) The starting current for the DC motors shall be restricted to 3 times of the full load current.
5.00.00	**TEMPERATURE RISE** **Air cooled motors** 70 deg. C by resistance method for both thermal class 130(B) & 155(F) insulation. **Water cooled** 80 deg. C over inlet cooling water temperature mentioned elsewhere, by resistance method for both thermal class 130(B) & 155(F) insulation.

	41 deg.C over inlet cooling water maximum temperature of 39 deg.C for thermal class 90 (Y) wet wound Boiler circulation pump motor.
6.00.00	**OPERATIONAL REQUIREMENTS**
6.01.00	**Starting Time**
6.01.01	For motors with starting time upto 20 secs. at minimum permissible voltage during starting, the locked rotor withstand time under hot condition at highest voltage limit shall be at least 2.5 secs. more than starting time.
6.01.02	For motors with starting time more than 20 secs. and upto 45 secs. at minimum permissible voltage during starting, the locked rotor withstand time under hot condition at highest voltage limit shall be at least 5 secs. more than starting time.
6.01.03	For motors with starting time more than 45 secs. at minimum permissible voltage during starting, the locked rotor withstand time under hot condition at highest voltage limit shall be more than starting time by at least 10% of the starting time.
6.01.04	Speed switches mounted on the motor shaft shall be provided in cases where above requirements are not met.
6.02.00	**Torque Requirements**
6.02.01	Accelerating torque at any speed with the lowest permissible starting voltage shall be at least 10% motor full load torque.
6.02.02	Pull out torque at rated voltage shall not be less than 205% of full load torque. It shall be 275% for crane duty motors.
6.03.00	**Starting voltage requirement**
	(a) Up to 85% of rated voltage for ratings below 110 KW
	(b) Up to 80% of rated voltage for ratings from 110 KW to 200 KW
	(c) Up to 85% of rated voltage for ratings from 201 KW to 1000 KW
	(d) Up to 80% of rated voltage for ratings from 1001 KW to 4000 KW
	(e) Up to 75 % of rated voltage for ratings above 4000KW
	Except AOP & JOP motors running on D.G emergency supply, starting voltage shall be 80%.

CLAUSE NO.	TECHNICAL REQUIREMENTS
7.00.00	**DESIGN AND CONSTRUCTIONAL FEATURES**
7.01.00	Suitable single phase space heaters shall be provided on motors rated 30KW and above to maintain windings in dry condition when motor is standstill. Separate terminal box for space heaters & RTDs shall be provided. However for flame proof motors, space heater terminals inside the main terminal box may be acceptable.
7.02.00	All motors shall be either Totally enclosed fan cooled (TEFC) or totally enclosed tube ventilated (TETV) or Closed air circuit air cooled (CACA) type. However, motors rated 3000KW or above can be Closed air circuit water cooled (CACW). The method of movement of primary and secondary coolant shall be self-circulated by fan or pump directly mounted on the rotor of the main motor as per IEC 60034-6. However VFD driven motors can be offered with forced cooling type with machine mounted fan or pump driven by separate electric motor. Motors and EPB located in hazardous areas shall have flame proof enclosures conforming to IS: 2148 as detailed below (a) Fuel oil area : Group – IIB (b) Hydrogen generation : Group - IIC or (Group-I, Div-II as per plant area NEC) or (Class-1, Group-B, Div-II as per NEMA / IEC60034)
7.03.00	Winding and Insulation (a) Type : Non-hygroscopic, oil resistant, flame resistant (b) Starting duty : Two hot starts in succession, with motor initially at normal running temperature. (c) 11kV & 3.3 kV AC motors : Thermal class 155 (F) insulation. The winding insulation process shall be total Vacuum Pressure Impregnated i.e. resin poor method. The lightning Impulse & intertern insulation surge withstand level shall be as per IEC-60034 part-15. However winding insulation for wet wound Boiler circulation pump motor shall be thermal class 90 (Y) or better. (d) 240VAC, 415V AC & 220V DC motors : Thermal Class (B) or better
7.04.00	Motors rated above 1000KW shall have insulated bearings to prevent flow of shaft currents.

CLAUSE NO.	TECHNICAL REQUIREMENTS
7.05.00	Motors with heat exchangers shall have dial type thermometer with adjustable alarm contacts to indicate inlet and outlet primary air temperature.
7.06.00	Noise level for all the motors shall be limited to 85dB (A) except for BFP motor for which the maximum limit shall be 90 dB(A). Vibration shall be limited within the limits prescribed in IS/IEC 60034-14. Motors shall withstand vibrations produced by driven equipment. HT motor bearing housings shall have flat surfaces, in both X and Y directions, suitable for mounting 80mmX80mm vibration pads.
7.07.00	In HT motors, at least four numbers simplex / two numbers duplex platinum resistance type temperature detectors shall be provided in each phase stator winding. Each bearing of HT motor shall be provided with dial type thermometer with adjustable alarm contact and preferably 2 numbers duplex platinum resistance type temperature detectors.
7.08.00	Motor body shall have two earthing points on opposite sides.
7.09.00	11 KV motors shall be offered with Separable Insulated Connector (SIC) as per IEEE 386. The offered SIC terminations shall be provided with protective cover and trifurcating sleeves. SIC termination kit shall be suitable for fault level of 25 KA for 0.17 seconds.
7.10.00	3.3 KV motors shall be offered with dust tight phase separated double walled (metallic as well as insulated barrier) Terminal box. Suitable termination kit shall be provided for the offered Terminal box. The offered Terminal Box shall be suitable for fault level of 250 MVA for 0.12 sec. Removable gland plates of thickness 3 mm (hot/cold rolled sheet steel) or 4 mm (non-magnetic material for single core cables) shall be provided.
7.11.00	The spacing between gland plate & center of terminal stud shall be as per Table-I.
7.12.00	All motors shall be so designed that maximum inrush currents and locked rotor and pullout torque developed by them at extreme voltage and frequency variations do not endanger the motor and driven equipment.
7.13.00	The motors shall be suitable for bus transfer schemes provided on the 11kV, 3.3 kV /415V systems without any injurious effect on its life.
7.14.00	For motors rated 2000 KW & above, neutral current transformers of PS class shall be provided on each phase in a separate neutral terminal box.
7.15.00	The size and number of cables (for HT and LT motors) to be intimated to the successful bidder during detailed engineering and the contractor shall provide terminal box suitable for the same.

CLAUSE NO.	TECHNICAL REQUIREMENTS
8.00.00	The ratio of locked rotor KVA at rated voltage to rated KW shall not exceed the following (without any further tolerance) except for BFP motor. (a) Below 110KW : 11.0 (b) From 110 KW & upto 200 KW : 9.0 (c) Above 200 KW & upto 1000KW : 10.0 (d) From 1001KW & upto 4000KW : 9.0 (e) Above 4000KW : 6 to 6.5
9.00.00	CW motor shall be designed with minimum power factor of 0.8 at design duty point.
10.00.00	**TYPE TEST**
10.01.00	**HT MOTORS**
10.01.01	The contractor shall carry out the type tests as listed in this specification on the equipment to be supplied under this contract. The bidder shall indicate the charges for each of these type tests separately in the relevant schedule of Section - VII-(BPS) and the same shall be considered for the evaluation of the bids. The type tests charges shall be paid only for the test(s) actually conducted successfully under this contract and upon certification by the employer's engineer.
10.01.02	The type tests shall be carried out in presence of the employer's representative, for which minimum 15 days notice shall be given by the contractor. The contractor shall obtain the employer's approval for the type test procedure before conducting the type test. The type test procedure shall clearly specify the test set–up, instruments to be used, procedure, acceptance norms, recording of different parameters, interval of recording, precautions to be taken etc. for the type test(s) to be carried out.
10.01.03	In case the contractor has conducted such specified type test(s) within last ten years as on the date of bid opening, he may submit during detailed engineering the type test reports to the employer for waival of conductance of such test(s). These reports should be for the tests conducted on the equipment similar to those proposed to be supplied under this contract and test(s) should have been either conducted at an independent laboratory or should have been witnessed by a client. The employer reserves the right to waive conducting of any or all the specified type test(s) under this contract. In case type tests are waived, the type test charges shall not be payable to the contractor.
10.01.04	Further the Contractor shall only submit the reports of the type tests as listed in "LIST OF TESTS FOR WHICH REPORTS HAVE TO BE SUBMITTED "and carried out within last ten years from the date of bid opening. These reports should be for

the test conducted on the equipment similar to those proposed to be supplied under this contract and the test(s) should have been either conducted at an independent laboratory or should have been witnessed by a client. However if the contractor is not able to submit report of the type test(s) conducted within last ten years from the date of bid opening, or in the case of type test report(s) are not found to be meeting the specification requirements, the contractor shall conduct all such tests under this contract at no additional cost to the employer either at third party lab or in presence of client/ employer's representative and submit the reports for approval.

10.01.05 **LIST OF TYPE TESTS TO BE CONDUCTED**

The following type tests shall be conducted on each type and rating of HT motor

(a) No load saturation and loss curves upto approximately 115% of rated voltage

(b) Measurement of noise at no load.

(c) Momentary excess torque test (subject to test bed constraint).

(d) Full load test (subject to test bed constraint)

(e) Temperature rise test at rated conditions. During heat run test, bearing temp., winding temp., coolant flow and its temp. shall also be measured. In case the temperature rise test is carried at load other than rated load, specific approval for the test method and procedure is required to be obtained. Wherever ETD's are provided, the temperature shall be measured by ETD's also for the record purpose.

10.01.06 **LIST OF TESTS FOR WHICH REPORTS HAVE TO BE SUBMITTED**

The following type test reports shall be submitted for each type and rating of HT motor

(a) Degree of protection test for the enclosure followed by IR, HV and no load run test.

(b) Terminal box-fault level withstand test for each type of terminal box of HT motors only.

(c) Lightning Impulse withstand test on the sample coil shall be as per clause no. 4.3 IEC-60034, part-15

(d) Surge-withstand test on interturn insulation shall be as per clause no. 4.2 of IEC 60034, part-15

CLAUSE NO.	TECHNICAL REQUIREMENTS
10.02.00	**LT Motors**
10.02.01	LT Motors supplied shall be of type tested design. During detailed engineering, the contractor shall submit for employer's approval the reports of all the type tests as listed in this specification and carried out within last *ten* years from the date of bid opening. These reports should be for the test conducted on the equipment similar to those proposed to be supplied under this contract and the test(s) should have been either conducted at an independent laboratory or should have been witnessed by a client.
10.02.02	However if the contractor is not able to submit report of the type test(s) conducted within last ten years from the date of bid opening, or in the case of type test report(s) are not found to be meeting the specification requirements, the contractor shall conduct all such tests under this contract at no additional cost to the employer either at third party lab or in presence of client/ employer's representative and submit the reports for approval.
10.02.03	**LIST OF TESTS FOR WHICH REPORTS HAVE TO BE SUBMITTED** **The following type test reports shall be submitted for each type and rating of LT motor of above 50 KW only** 1. Measurement of resistance of windings of stator and wound rotor. 2. No load test at rated voltage to determine input current power and speed 3. Open circuit voltage ratio of wound rotor motors (in case of Slip ring motors) 4. Full load test to determine efficiency power factor and slip. 5. Temperature rise test. 6. Momentary excess torque test. 7. High voltage test. 8. Test for vibration severity of motor. 9. Test for noise levels of motor(Shall be limited as per clause no 7.06.00 of this section) 10. Test for degree of protection and 11. Over speed test.

12. Type test reports for motors located in fuel oil area having flame proof enclosures as per IS 2148 / IEC 60079-1

10.03.00 All acceptance and routine tests as per the specification and relevant standards shall be carried out. Charges for these shall be deemed to be included in the equipment price.

10.04.00 The type test reports once approved for any projects shall be treated as reference. For subsequent projects of NTPC, an endorsement sheet will be furnished by the manufacturer confirming similarity and “No design Change”. Minor changes if any shall be highlighted on the endorsement sheet.

TABLE - I

DIMENSIONS OF TERMINAL BOXES FOR LV MOTORS

Motor MCR in KW	**Minimum distance between centre of stud and gland plate in mm**
UP to 3 KW	**As per manufacturer's practice.**
Above 3 KW - upto 7 KW	85
Above 7 KW - upto 13 KW	115
Above 13 KW - upto 24 KW	167
Above 24 KW - upto 37 KW	196
Above 37 KW - upto 55 KW	249
Above 55 KW - upto 90 KW	277
Above 90 KW - upto 125 KW	331
Above 125 KW-upto 200 KW	203

For HT motors the distance between gland plate and the terminal studs shall not be less than 500 mm.

PHASE TO PHASE/ PHASE TO EARTH AIR CLEARANCE:

NOTE: Minimum inter-phase and phase-earth air clearances for LT motors with lugs installed shall be as follows:

CLAUSE NO.	TECHNICAL REQUIREMENTS

Motor MCR in KW	Clearance
UP to 110 KW	10mm
Above 110 KW and upto 150 KW	12.5mm
Above 150 KW	19mm

SECTION -3

PROJECT INFORMATION AND GENERAL REQUIREMENTS

3.0 GENERAL

This section stipulates the General Technical Requirements under the Contract and will form an integral part of the Technical Specification.

The provisions under this section are intended to supplement general requirements for the materials, equipment and services covered under other sections of tender documents and are not exclusive. However, in case of conflict between the requirements specified in this section and requirements specified under other sections, the requirements specified under respective sections shall prevail.

3.1 PROJECT DETAILS

	Particular	Details
a)	Customer	Patratu Vidyut Utpadan Nigam Ltd (PVUNL) – A Subsidiary of NTPC in Joint Venture with JBVNL.
b)	Engineer/Consultant/ Inspector	NTPC Ltd.
c)	Project Title	Patratu Super Thermal Power Project Expansion Phase – I (3X 800MW) – 400kV GIS Switchyard at Patratu STPP
d)	Project Location	Place: Patratu District: Ramgarh State: Jharkhand
e)	Latitude & Longitude	**Latitudes and Longitudes of the site are as follows:** Corner name / Latitude / Longitude Top Corner: 23° 38 ' 60 '' N / 85° 17' 51.5" E Bottom Corner: 23° 38 '12.5 '' N / 85° 17' 27" E Left Corner: 23° 38 ' 22.5 '' N / 85° 17' 10.6 '' E Right Corner: 23° 38 ' 40 '' N / 85° 17' 57 '' E
f)	Nearest Railway Station	Patratu – At a distance of about 4 km on Barkakhana-Barwadih Railway Line.
g)	Distance of project location from the Railway station	4 km (approx.)

h)	Nearest Major Town	Ranchi
i)	Distance of the town from the project site	45 km
j)	Nearest commercial airport	Birsa Munda Airport, Ranchi.
k)	Distance of airport from the project site	45 km
	SITE CONDITIONS (for design purposes)	
a)	Design ambient temperature	50°C
b)	Maximum Relative humidity	95 %
c)	Height above mean sea level	Less than 1000 meters
d)	Pollution Severity	Heavily polluted
e)	Criteria for Wind Resistant design of structures and equipment	Standard Applicable - IS 875 (Part 3)
f)	Basic Wind speed "Vb" at ten meters above the mean ground level.	39 m/ sec
g)	Category of terrain	Cat –2
h)	Risk Coefficient "K1"	1.06

3.1.1 **SYSTEM PARAMETERS:**

Sl.No.	Parameters	400 kV
1	Highest system voltage	420 kV rms
2	Lightning Impulse voltage	±1425kVp
3	Switching impulse voltage	±1050kVp
4	Power frequency withstand for 1 min (rms)	650 kV(rms)
5	Max. fault level (1 sec.)	63 kA
6	Minimum creepage distance	10500 mm

3.1.2 **AUXILIARY POWER:**

Sl.No.	Nominal Connection Voltage	Variations in Voltage	Frequency	Phase	Neutral
1	415V	±10%	50 (+3% -5%)	3Phase , 4 Wire	Solidly Earthed
2	240V	±10%	50 (+3% -5%)	1 phase	Solidly Earthed

Combined variation of voltage and frequency shall be + 10%. Design fault level of 415V system shall be restricted to 50kA rms for 1 second.

The operational limits for variation of DC voltage are (+) 10% to (-) 15%.

3.1.3 The various minimum heights of the AIS switchyard shall be as given below from plinth level:

Voltage	Equipment /1st Level	Line Take Off Gantry Height	Peak
400kV	8000mm	23000mm	8500mm

The minimum vertical distance from the bottom of the lowest porcelain part of the bushing, porcelain enclosures or support insulators to the bottom of the equipment structure, where it rests on the foundation pad shall be 2550mm.

The minimum height of intermediate gantry tower for 400kV wherever required shall be 25 m and the peak (s) shall be of 8.5 m. The gantry width for 400kV AIS shall be minimum 27m or as required to meet the specified clearances.

3.1.4 The minimum clearances for 400kV switchyards shall be as given below:

	400kV
Phase to earth clearance	3500 mm
Phase to phase clearance	4000 mm
Section clearance	6500 mm

INSTRUCTION TO BIDDERS:

The bidders shall furnish catalogues, engineering data, technical information, design documents, drawings etc fully in conformity with the technical specification.

The supplier should be approved by Employer. If not, it is the responsibility of the vendor to be assessed and approved Employer, before placement of order by BHEL. Any cost involved in vendor assessment/approval must be borne by the vendor himself.

The Bidder's proposal shall be based upon the use of equipment and material complying fully with the requirements specified herein. It is recognized that the Bidder may have standardized on the use of certain components, materials, processes or procedures different than those specified herein. Alternate proposals offering similar equipment based on the manufacturer's standard practice will also be considered, provided the base offer is in line with technical specifications and such proposals meet the specified design standards and performance requirement and are acceptable to the Purchaser. Sufficient amount of information for justifying such proposals shall be furnished to Purchaser alongwith the bid to enable the Purchaser to determine the acceptability of these proposals.

Wherever a material or article is specified or defined by the name of a particular brand, Manufacturer or Vendor, the specific name mentioned shall be understood to be indicative of the function and quality desired and not restrictive. Other manufacturer's products may be considered provided sufficient information is furnished to enable the Employer to determine that the products proposed are equivalent to those named.

Equipment furnished shall be complete in every respect with all mountings, fittings, fixtures and standard accessories normally provided with such equipment and/ or needed for erection, completion and safe operation of the equipment as required by applicable codes, though they may not have been specifically detailed in the Technical Specifications unless included in the list of exclusions. Materials and components not specifically stated in the specification but which are necessary for commissioning and satisfactory operation of the switchyard unless specifically excluded shall be deemed to be included in the scope of the specification and shall be supplied without any extra cost. All similar standard components/parts of similar standard equipment under supply shall be inter-changeable with one another.

The bidder shall supply type tested (including special tests as per tech. specification) equipment and materials. The test reports shall be furnished by the bidder along with equipment/ material drawings. In the event of any discrepancy in the test reports, (i.e., if any test report is not acceptable due to any design/ manufacturing changes or due to non-compliance with the Technical Specification and/ or applicable standard), the tests shall be carried out without any additional cost implication to the BHEL. BHEL reserves the right to get any or all type/tests conducted/repeated.

CODES AND STANDARDS

In addition to the codes and standards specifically mentioned in the relevant technical specifications for the equipment / plant / system, all equipment parts, systems and works covered under this specification shall comply with all currently applicable statutory regulations and safety codes of the Republic of India as well asof the locality where they will be installed, including the following :

a) Indian Electricity Act

b) Indian Electricity Rules
c) Indian Explosives Act

d) Indian Factories Act and State Factories Act

e) Indian Boiler Regulations (IBR)

f) Regulations of the Central Pollution Control Board, India

g) Regulations of the Ministry of Environment & Forest (MoEF), Government of India

h) Pollution Control Regulations of Department of Environment, Government of India

i) State Pollution Control Board.

(j.) Rules for Electrical installation by Tariff Advisory Committee (TAC).

(k.) Building and other construction workers (Regulation of Employment and Conditions of services) Act, 1996

(l.) Building and other construction workers (Regulation of Employment and Conditions of services) Central Rules, 1998

(m.) Explosive Rules, 1983

(n.) Petroleum Act, 1984

(o.) Petroleum Rules, 1976,

(p.) Gas Cylinder Rules, 1981

(q.) Static and Mobile Pressure Vessels (Unified) Rules, 1981

(r.) Workmen's Compensation Act, 1923

(s.) Workmen's Compensation Rules, 1924

(t.) NTPC Safety Rules for Construction and Erection

(u.) NTPC Safety Policy

(v.) Any other statutory codes / standards / regulations, as may be applicable.

Unless covered otherwise in the specifications, the latest editions (as applicable as on date of bid opening: 03-March-2017), of the codes and standards given below shall also apply:

a) Bureau of Indian standards (BIS)

b) Japanese Industrial Standards (JIS)

c) American National Standards Institute (ANSI)

d) American Society of Testing and Materials (ASTM)

e) American Society of Mechanical Engineers (ASME)

f) American Petroleum Institute (API)

g) Standards of the Hydraulic Institute, U.S.A.

h) International Organization for Standardization (ISO)

i) Tubular Exchanger Manufacturer's Association (TEMA)

j) American Welding Society (AWS)

k) National Electrical Manufacturers Association (NEMA)

l) National Fire Protection Association (NFPA)

m) International Electro-Technical Commission (IEC)

n) Expansion Joint Manufacturers Association (EJMA)

o) Heat Exchange Institute (HEI)

p) IEEE standard

q) JEC standard

Other International/ National standards such as DIN, VDI, BS, GOST etc. shall also be accepted for only material codes and manufacturing standards, subject to the Employer's approval, for which the Bidder shall furnish, adequate information to justify that these standards are equivalent or superior to the standards mentioned above. In all such cases the Bidder shall furnish specifically the variations and deviations from the standards mentioned elsewhere in the specification together with the complete word to word translation of the standard that is normally not published in English.

As regards highly standardized equipment such as Steam Turbine and Generator, National /International standards such as JIS, DIN, VDI, ISO, SEL, SEW, VDE, IEC & VGB shall also be considered as far as applicable for Design, Manufacturing and Testing of the respective equipment. However, for those of the above equipment not covered by these National / International standards, established and proven standards of manufacturers shall also be considered.
In the event of any conflict between the codes and standards referred to in the above clauses and the requirement of this specification, the requirement of Technical Specification shall govern.

In case of any change in codes, standards & regulations between 03-March-2017 and the date when vendors proceed with fabrication, the Employer shall have the option to incorporate the changed requirements or to retain the original standard. It shall be the responsibility of the Contractor to bring to the notice of the Employer such changes and advise Employer of the resulting effect.

ENGINEERING DATA

Drawings

All drawings submitted by the supplier including those submitted at the time of bid shall be in sufficient detail to indicate the type, size, arrangement, material description, Bill of Materials, weight of each component, break-up for packing and shipment, the external connections, fixing arrangement required. The dimensions required for installation and interconnections with other equipment and materials, clearances and spaces required for installation and interconnections between various portions of equipment and any other information specifically requested in the specifications.

Each drawing submitted by the bidder (including those of sub-vendors) shall bear a title block at the right hand bottom corner with clear mention of the name of the Employer, the system designation, the specifications title, the specification number, the name of the Project, drawing number and revisions. If standard catalogue pages are submitted, the applicable items shall be indicated therein. All titles, noting, markings and writings on the drawing shall be in English. All the dimensions should be in metric units.

After the approval of the drawings, further work by the bidder shall be in strict accordance with these drawings and no deviation shall be permitted without the written approval of the Purchaser, if so required.

The review of these document/data/drawings by the purchaser will cover only general conformance of the document/data/drawings to the specification and contract, interfaces with the equipment provided under specification, external connections and of the dimensions which might affect plan layout. This review by the purchaser may not indicate a thorough review of the dimensions, quantities and details of the equipment, material, any devices or items indicated or the accuracy of the information submitted. The review and/or approval by the purchaser shall not be considered by the bidder, as limiting any of his responsibilities and liabilities for mistakes and deviations from the requirements, specified under these specifications and documents.

All manufacturing, fabrication and execution of work in connection with the equipment/system prior to the approval of the drawings shall be at the bidder's risk. The bidder is expected not to make any changes in the design of the equipment /system, once they are approved by the Purchaser. However, if some changes are necessitated in the design of the equipment/system at a later date, the bidder may do so, but such changes shall promptly be brought to the notice of the Purchaser indicating the reasons for the change and get the revised drawing approved

again in strict conformance to the provisions of the Technical Specification. Approval of bidder's drawing or work by the Purchaser shall not relieve the bidder of any of his responsibilities and liabilities under the Contract.

All engineering data submitted by the contractor after final process including review and approval by the purchaser shall form part of the contract document and the entire work performed under these specifications shall be performed in strict conformity with technical specification, unless otherwise expressly requested by the purchaser in writing.

Bidder's Drawing Submission and Approval Procedure

The following procedure for submission and review/approval of the drawings, data reports, information, etc. shall be followed by the bidder:

a. All data/information furnished by Vendor in the form of drawings, documents, Catalogues or in any other form for Employer's information/interface and/or review and approval are referred by the general term "drawings".

b. The 'Master drawings list' indicating titles, Drawing Number, Date of submission and approval etc. shall be furnished by the bidder. This list shall be updated if required at suitable interval during detailed engineering.

c. All drawings (including those of sub-vendor) shall bear at the right hand bottom corner the 'title plate' with all relevant information duly filled in. The bidder shall furnish this format to his sub-vendor along with his purchase order for sub-vendor's compliance.

d. Contractor shall submit all the drawings in five (5) copies for review of Employer. Employer shall forward their comments within four (4) weeks of receipt of drawings.

e. Upon review of each drawings, depending on the correctness and completeness of the drawings, the same will be categorised and approval accorded in one of the following categories:

CATEGORY I	Approved
CATEGORY II	Approved, subject to incorporation of comments/modification as noted. Resubmit revised drawing incorporating the comments
CATEGORY III	Not approved. Resubmit revised drawings for Approval after incorporating comments/modifications as noted
CATEGORY IV	For information and records

f. Bidder shall resubmit the drawings approved under Category II, III within one (1) week of receipt of comments on the drawings, incorporating all comments. Every revision of the drawing shall bear a revision index wherein such revisions shall be highlighted in the form

of description or marked up in the drawing identifying the same with relevant revision number enclosed in a triangle (e.g 1.2.3. etc.).

g. In case Bidder does not agree with any specific comment, he shall furnish the explanation for the same to Employer for consideration. In all such cases Bidder shall necessarily enclose explanations along with the revised drawing (taking care of balance comments) to avoid any delay and/or duplication in review work.

h. It is the responsibility of the Bidder to get all the drawings approved in the Category I or IV (as the case may be) and complete engineering activities within the agreed schedule. Any delay arising out of submission and modification of drawings shall not alter the contract completion schedule.

i. Bidder shall not make any changes in the portions of the drawing other than those commented. If changes are required to be made in the portions already approved, the Bidder shall resubmit the drawings identifying the changes (along with reasons for changes) for Employer's review and approval. **Drawings resubmitted shall show clearly the portions where the same are revised marking the relevant revision numbers and Employer shall review only such revised portion of documents.**

j. As Built Drawings

After final acceptance of individual equipment / system by the Employer, the Bidder will update all original drawings and documents for the equipment / system to "as built" conditions and submit no. of copies as per clause 3.5.5.

k. **Final Submission of drawings and documents:**

The Bidder shall furnish the following after approval of all drawings /documents and test reports:

List of drawings bearing the Employer's and Contractor's drawing number.

Six (6) bound sets along-with two (2) sets of CD-ROMs/ DVD/Portable hard disk of all final drawings/documents.

Bidder shall also furnish six (6) bound sets of all as-built drawings including the list of all as-built drawings bearing drawing numbers. The Contractor shall also furnish two (2) sets of CD-ROMs/ DVD/Portable hard disk of all as-built drawings as decided by the Employer.

The Bidder shall also furnish four (4) copies and two (2) sets of CD-ROMs/ DVD/Portable hard disk of instruction/ operations & maintenance manuals (after approval) for all the equipments

SECTION 4

LIST OF DRAWINGS & DOCUMENTS

Bidder shall submit the drawings & data sheets as per the following tentative list:

SL No.	DRAWING NAME
01	AC Equipment & Ducting layout for GIS Control building
02	AC Outdoor unit layout for GIS Control building
03	Schematic, GA & SLD for AC PDB in GIS control building
	DATA SHEETS NAME
01	TDS For AHU & D-X type Condensing Unit
02	Heat Load calculation for Air conditioning system of Control building areas
03	TDS For GI Sheet for Ducts
04	TDS For Insulation
05	TDS For Supply & Return Air Diffuser
06	TDS For Fire Damper
07	TDS For Pre-filter & Fine filter
08	TDS For Instruments
09	BOQ – Air Conditioning System
10	FQP - Air Conditioning System
11	QAP – Air Conditioning System

Note: Documents no. from NTPC shall be provided during detailed engg. After finalization of detailed MDL for Air conditioning system covering complete scope as per specification.

SECTION 5

ENCLOSURES TO SPECIFICATION

SCHEDULES TO BE FILLED UP BY THE BIDDER

Schedule 1 **Schedule of Deviations**

Schedule 2 **Details of contact persons (technical & commercial)**

Schedule 3 **Enclosures to Specification**

a. **ANNEXURE-A Drawings**

b. **ANNEXURE-IA-Make List**

SCHEDULE-1

SCHEDULE OF TECHNICAL DEVIATION

The following are the deviations / variations / exceptions from the specification:

Section	Clause No./ Page No.	Statement of deviation/ Variations/Exceptions

1) In case, this schedule is not submitted, it will be presumed that the equipment /material to be supplied under this contract is deemed to be in compliance with the specification.

2) If there is NIL deviation, even then the format to be filled as **NIL DEVIATION**

3) Continuation sheets of like size and format may be used as per the Bidder's Requirement and shall be annexed to this schedule.

Place — Signature of the authorized representative of Bidder

Name ----------

Date — Designation----------

Company seal----------

SCHEDULE-2

DETAILS OF CONTACT PERSON BOTH TECHNICAL AND COMMERCIAL

Name

Address for correspondence

Phone No.

Fax No.

Email

Place

Date

Signature of the authorized representative of Bidder

Name----------

Designation----------

Company seal ----------

Note: Continuation sheets of like size and format may be used as per the Bidder's Requirement and shall be annexed to this schedule.

SCHEDULE – 3

ENCLOSURES TO SPECIFICATION

DRAWINGS (ANNEXURE-A)

- **CONTROL BUILDING LAYOUT FOR OF 400 KV SWITCHYARD (Drg. No. 9585-001-572-PVC-C-0047 R3)**

LIST OF MAKES (ANNEXURE-1A)

FIRST ANGLE PROJECTION (ALL DIMENSIONS ARE IN MM.)

DRAWING No9585-001-572-PVC-F-0047

REF DRG:

1. 9585-001-572-PVE-P-0002: 400kV GIS SWITCHYARD SINGLE LINE DIAGRAM.
2. 9585-001-572-PVC-C-0497: SWITCHYARD CONTROL ROOM BUILDING ARCH.

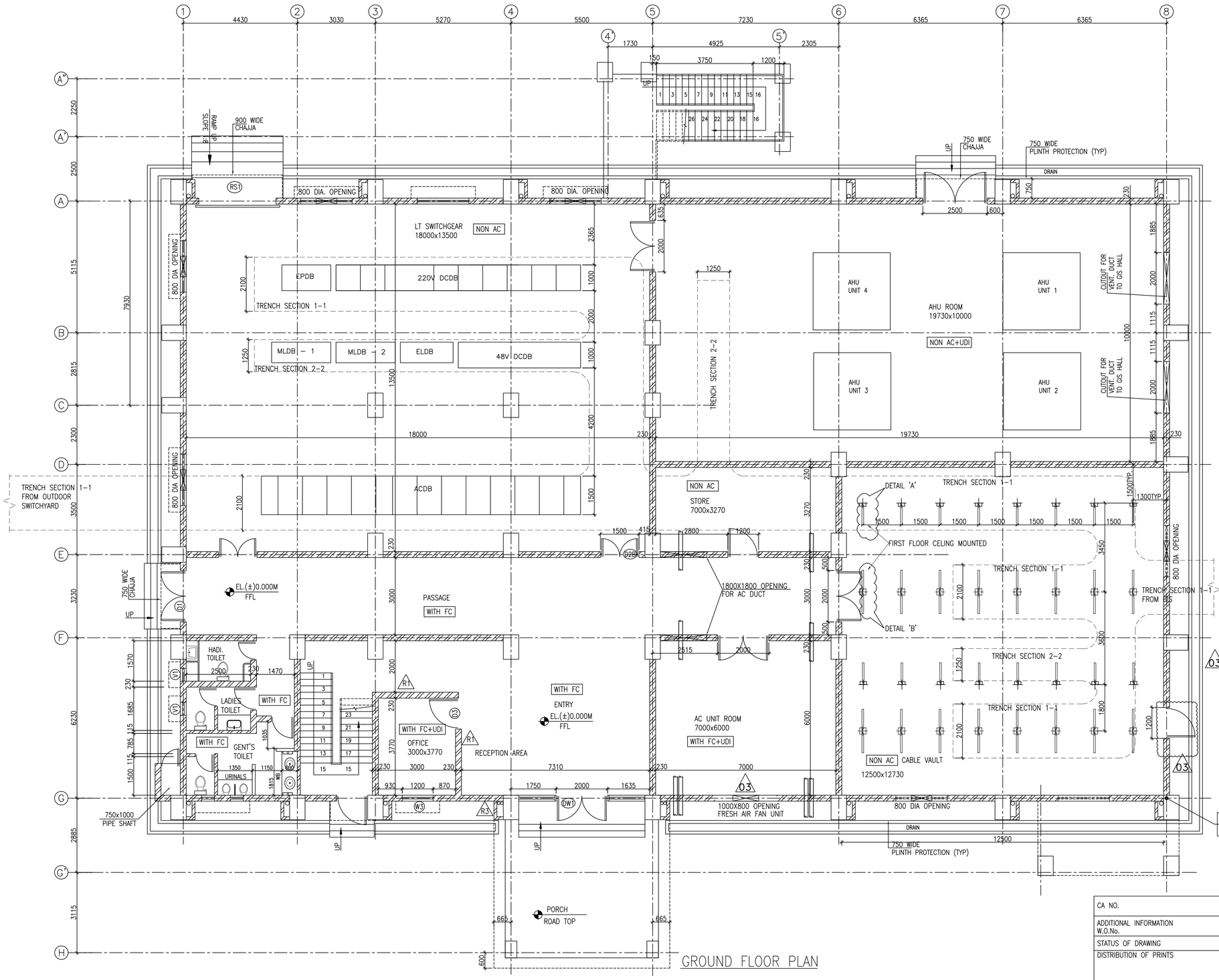

GROUND FLOOR PLAN

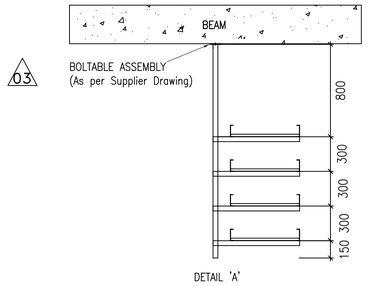

DETAIL 'A'

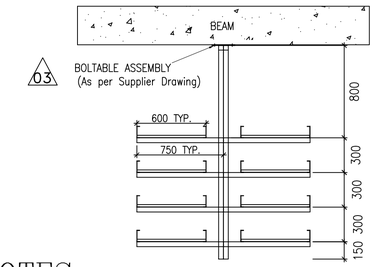

DETAIL 'B'

NOTES:

1. ALL DIMENSION ARE IN MM UNLESS NOTED OTHERWISE.
2. POWER & CONTROL CABLE SHALL BE LAID ON SEPERATE TRAYS.
3. THIS DRAWING SHALL BE READ IN CONJUNCTION WITH TECHNICAL SPECIFICATION.
4. FIRST FLOOR IS AT 5.0 M LEVEL ABOVE GROUND FLOOR FFL.
5. ROOF LEVEL IS AT 5.0 M LEVEL ABOVE FIRST FLOOR FFL.
6. ALL AC AREAS/NON AC AREAS ARE MARKED.
7. FFL OF CONTROL ROOM BUILDING IS MIN. 500MM ABOVE FGL.
8. LIGHTING PANEL SHALL BE SHOWN IN ILLUMINATION DRAWING.
9. REFER DRG. 9585-001-572-PVE-F-0050 FOR INDOOR CABLE TRENCH AND CUT OUT DETAILS.
10. EL (±) 0.00M CORRESPONDS TO FFL WHICH IS 372.50M.
11. EL (-) 0.50M CORRESPONDS TO FGL WHICH IS 372.00M.
12. Underhung fixing shall be boltable type, location shown is indicative, which may be finalised as per site condition.
13. Tentative location of cutouts for axial flow exhaust fans shown. Final location to be referred from ventilation layout.

100 Dia GI PIPE - Below Floor

KEY PLAN

COPY RIGHT AND CONFIDENTIAL
The information on this document is the property of BHARAT HEAVY ELECTRICALS LIMITED
It must not be used directly or indirectly in a way prejudicial to the interest of the company.

COMPUTER DRG. PATH NAME :

REV.	DATE	ALTERED / CHECKED / APPROVED	REV.	DATE	ALTERED / CHECKED / APPROVED	REV.	DATE	ALTERED / CHECKED / APPROVED	REV.	DATE	ALTERED / CHECKED / APPROVED	REV.	DATE	ALTERED / CHECKED / APPROVED	REV.	DATE	DRN / ALTERED / CHECKED / APPROVED	REV.	DATE	DRN / DESN / CHECKED / APPROVED	REV.	DATE	DRN / ALTERED / CHECKED / APPROVED
ZONE			ZONE			ZONE			ZONE			ZONE			ZONE			ZONE			ZONE		
															R3	09.02.21	NS / NS / SKS / AG	R2	01.06.19	NS / NS / SKS / AG	R1	05.03.19	NS / NS / SKS / AG
																	REVISED AS PER NTPC'S COMMENTS AND OGA UPDATES OF PANELS			REVISED AS PER NTPC'S COMMENTS AND MEETING DATED 19-03-2019.			REVISED AS PER NTPC'S COMMENTS AND MEETING DATED 25-02-2019.

CA NO.	01/PVUNL-CS-9585-001-2/NOA-FC DATED 08/03/2018 & 01/PVUNL-CS-9585-001-2/NOA-SC DATED 08/03/2018 & 01/PVUNL-CS-9585-001-2/NOA-TC DATED 08/03/2018
ADDITIONAL INFORMATION W.O.No.	
STATUS OF DRAWING	
DISTRIBUTION OF PRINTS	

ग्राहक/परियोजना का नाम PATRATU VIDYUT UTPADAN NIGAM LTD.
NAME OF CUSTOMER/PROJECT PATRATU SUPER THERMAL POWER PROJECT EXPANSION PHASE-I (3x800 MW)

भारत हेवी इलेक्ट्रिकल्स लिमिटेड
ट्रांसमिशन परियोजना विभाग
BHARAT HEAVY ELECTRICALS LTD.
TRANSMISSION PROJECTS DIVISION

	नाम /NAME	हस्ता./SIGN.	दि./DATE
बनाया DRAWN	NS	NS	29-03-19
जांचा CHECKED	SKS	SKS	29-03-19
स्वीकृत APPROVED	AG	AG	29-03-19

विभाग DEPT. | कोड CODE | अनुपात / SCALE | कार्ड कोड CARD CODE

शीर्षक/TITLE
SWITCHYARD CONTROL ROOM BUILDING-EQUIPMENT LAYOUT

ड्राईंग क्र./BHEL DRAWING NO. TB-397-510-003 | पुनः/REV. 03
ड्राईंग क्र./NTPC DRAWING NO. 9585-001-572-PVC-F-0047 | पुनः/REV. 03
पृष्ठ क्र./SHEET No. 01 | अगला पृष्ठ/NEXT SHEET 02

SIGN. & DATE | REF. DRG. No. | INVENTORY No.

FIRST ANGLE PROJECTION (ALL DIMENSIONS ARE IN MM.)

DRAWING No9585-001-572-PVC-F-0047

COPY RIGHT AND CONFIDENTIAL
The information on this document is the property of BHARAT HEAVY ELECTRICALS LIMITED
It must not be used directly or indirectly in a way prejudicial to the interest of the company.

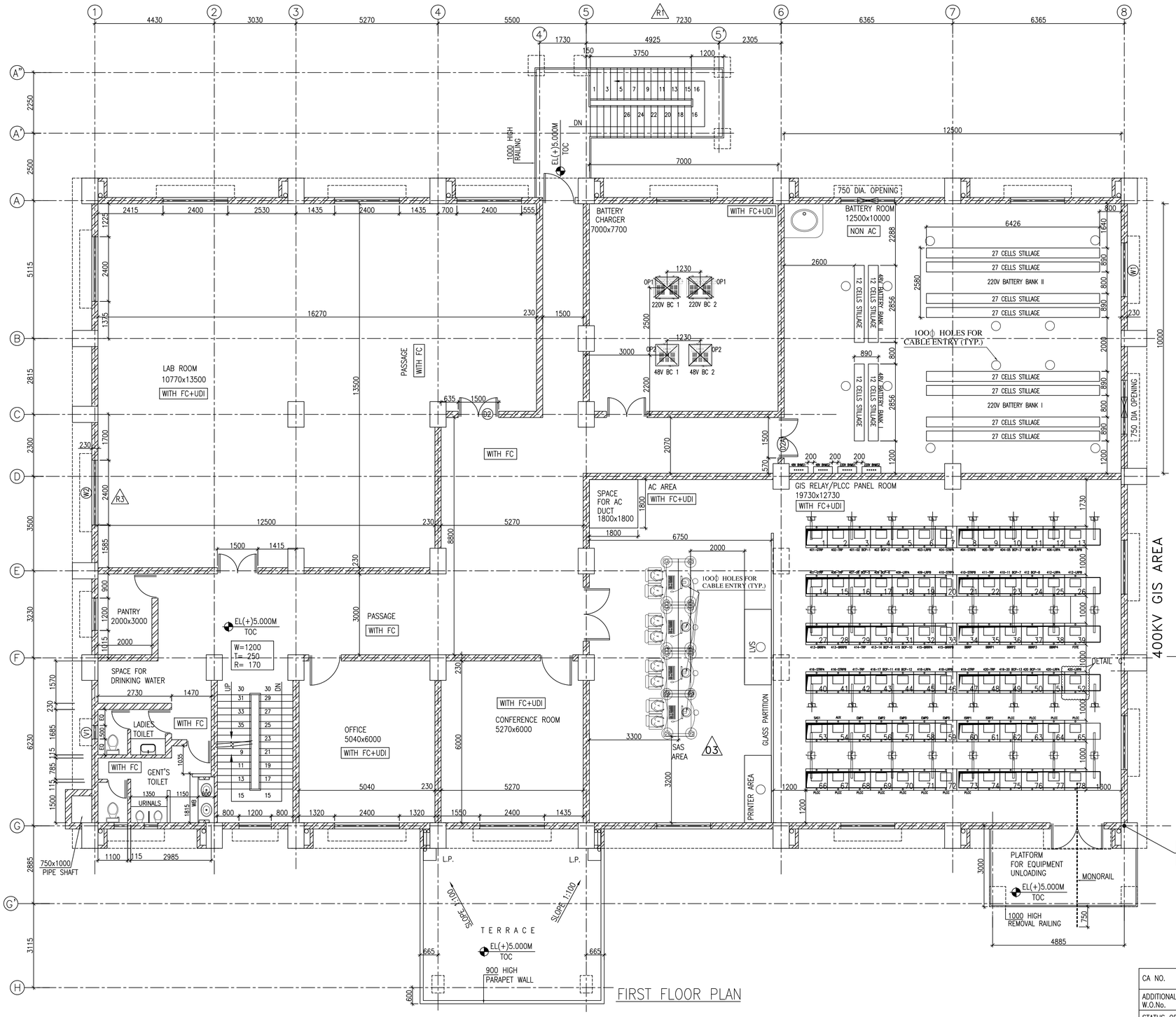

FIRST FLOOR PLAN

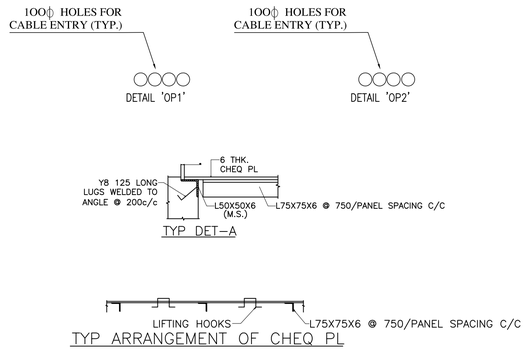

DETAILS OF PANELS - 03

PANEL TYPE	QTY.	LOCATION	SIZE (L mm X W mm)	REF. DWG. NO.
SWITCHYARD SERVICE SWITCHGEAR (ACDB)	1 NOS	LT SWITCHGEAR ROOM	12400X1500	TENTATIVE DIMENSION
SWITCHYARD MAIN AC LIGHTING DISTRIBUTION BOARD (MLDB1)	1 NOS	LT SWITCHGEAR ROOM	2300X800	TENTATIVE DIMENSION
SWITCHYARD MAIN AC LIGHTING DISTRIBUTION BOARD (MLDB2)	1 NOS	LT SWITCHGEAR ROOM	2300X800	TENTATIVE DIMENSION
SWITCHYARD EMERGENCY AC LIGHTING DB (ELDB)	1 NOS	LT SWITCHGEAR ROOM	2050X800	TENTATIVE DIMENSION
SWITCHYARD EMERGENCY DB (EPDB)	1 NOS	LT SWITCHGEAR ROOM	1900X1000	TENTATIVE DIMENSION
220 SWITCHYARD DCDB	1 NOS	LT SWITCHGEAR ROOM	9500X1000	TENTATIVE DIMENSION
48V PLCC DCDB	1 NOS	LT SWITCHGEAR ROOM	4750X1000	TENTATIVE DIMENSION
48V BATTERY	2 SETS	BATTERY ROOM	2856X890	As per 9585-001-572-PVE-Y-010
220V BATTERY	2 SETS	BATTERY ROOM	6426X2580	As per 9585-001-572-PVE-Y-005
48V BATTERY CHARGER	2 NOS	CHARGER ROOM	750X700	As per 9585-001-572-PVE-B-002
220V BATTERY CHARGER	2 NOS	CHARGER ROOM	1000X700	As per 9585-001-572-PVE-B-001
CONTROL & RELAY PANEL	53 NOS	PANEL ROOM	800X800	As per 9585-001-572-PVE-X-010
FOTE PANEL	1 NOS	PANEL ROOM	600X600	As per 9585-001-572-PVE-Y-012
SAS1+AUX	2 NOS	PANEL ROOM	800X600	As per 9585-001-572-PVE-X-013
Energy Metering Panels	2 NOS	PANEL ROOM	800X800	As per 9585-001-572-PVE-L-0965
Dummy Energy Metering Panels	3 NOS	PANEL ROOM	800X800	TENTATIVE DIMENSION
**PLCC Panels	12 NOS	PANEL ROOM	600X600	TENTATIVE DIMENSION

100 DIA HOLES FOR CABLE ENTRY (TYP.)

** PLCC PANEL NUMBERS AND SIZE TO BE CONFIRMED BY CUSTOMER AS IT IS OWNER SUPPLIED.

CA NO.	01/PVUNL-CS-9585-001-2/NOA-FC DATED 08/03/2018 & 01/PVUNL-CS-9585-001-2/NOA-SC DATED 08/03/2018 & 01/PVUNL-CS-9585-001-2/NOA-TC DATED 08/03/2018
ADDITIONAL INFORMATION W.O.No.	
STATUS OF DRAWING	ग्राहक/परियोजना का नाम PATRATU VIDYUT UTPADAN NIGAM LTD.
DISTRIBUTION OF PRINTS	NAME OF CUSTOMER/PROJECT PATRATU SUPER THERMAL POWER PROJECT EXPANSION PHASE-I (3x800 MW)

भारत हेवी इलेक्ट्रिकल्स लिमिटेड ट्रांसमिशन परियोजना विभाग
BHARAT HEAVY ELECTRICALS LTD. TRANSMISSION PROJECTS DIVISION

	नाम /NAME	हस्ता./SIGN.	दि./DATE
बनाया DRAWN	NS	NS	29-03-19
जाँचा CHECKED	SKS	SKS	29-03-19
स्वीकृत APPROVED	AG	AG	29-03-19

REV.	DATE	ALTERED / CHECKED / APPROVED	ZONE
R3	09.02.21	NS / SKS / AG	REVISED AS PER NTPC'S COMMENTS AND OGA UPDATES OF PANELS
R2	01.06.19	DRN NS / ALTERED NS / CHECKED SKS / APPROVED AG	REVISED AS PER NTPC'S COMMENTS AND MEETING DATED 19-03-2019.
R1	05.03.19	DRN NS / DESN NS / CHECKED SKS / APPROVED AG	REVISED AS PER NTPC'S COMMENTS AND MEETING DATED 25-02-2019.

विभाग DEPT. | कोड CODE | उलुपात / SCALE | कार्ड कोड CARD CODE

शीर्षक/TITLE
SWITCHYARD CONTROL ROOM BUILDING-EQUIPMENT LAYOUT

ड्राईंग क्र./BHEL DRAWING NO. TB-397-510-003 — पुनः/REV. 03

ड्राईंग क्र./NTPC DRAWING NO. 9585-001-572-PVC-F-0047 — पुनः/REV. 03

पृष्ठ क्र./SHEET No. 02 अगला पृष्ठ/NEXT SHEET 03

COMPUTER DRG. PATH NAME :
REF. DRG. No.
SIGN. & DATE
INVENTORY No.

FIRST ANGLE PROJECTION (ALL DIMENSIONS ARE IN MM.)

DRAWING No9585-001-572-PVC-F-0047

COPY RIGHT AND CONFIDENTIAL
The information on this document is the property of BHARAT HEAVY ELECTRICALS LIMITED
It must not be used directly or indirectly in a way detrimental to the interest of the company.

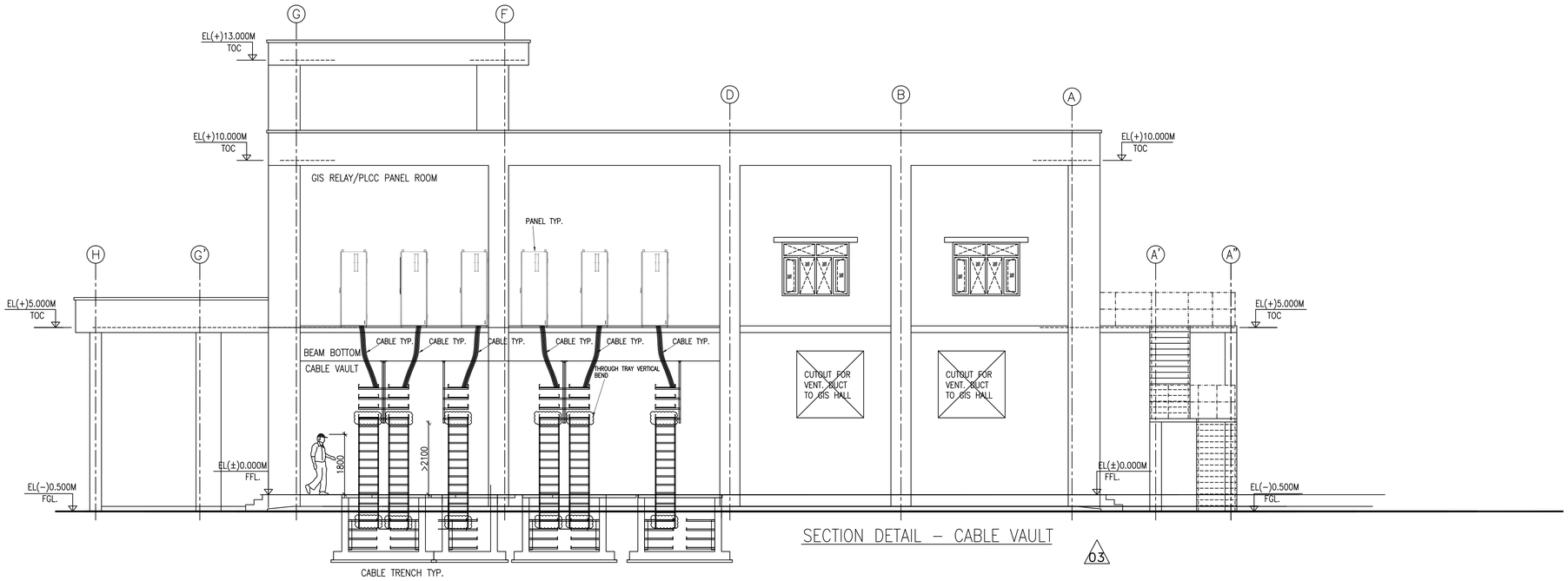

SECTION DETAIL – CABLE VAULT 03

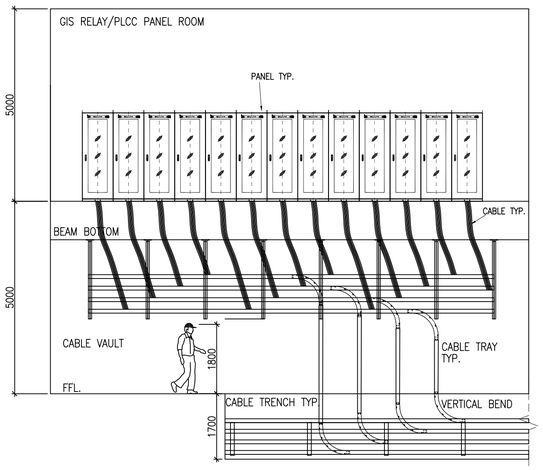

SECTION DETAIL – CABLE VAULT
03 FRONT VIEW – TYP.

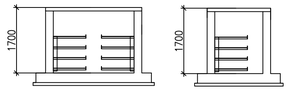

SECTION DEPTH DETAIL FOR ENTRY 03

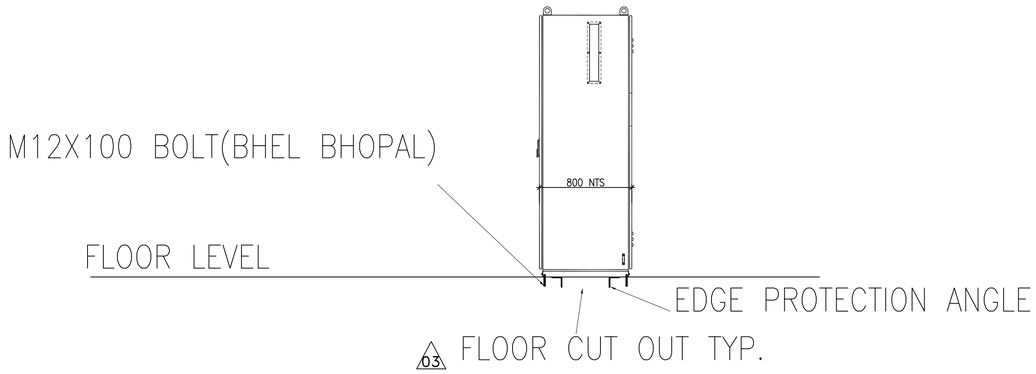

CA NO.	01/PVUNL-CS-9585-001-2/NOA-FC DATED 08/03/2018 & 01/PVUNL-CS-9585-001-2/NOA-SC DATED 08/03/2018 & 01/PVUNL-CS-9585-001-2/NOA-TC DATED 08/03/2018
ADDITIONAL INFORMATION W.O.No.	ग्राहक/परियोजना का नाम PATRATU VIDYUT UTPADAN NIGAM LTD.
STATUS OF DRAWING	NAME OF CUSTOMER/PROJECT PATRATU SUPER THERMAL POWER PROJECT EXPANSION PHASE-I (3x800 MW)
DISTRIBUTION OF PRINTS	भारत हेवी इलेक्ट्रिकल्स लिमिटेड ट्रांसमिशन परियोजना विभाग BHARAT HEAVY ELECTRICALS LTD. TRANSMISSION PROJECTS DIVISION

	नाम /NAME	हस्ता./SIGN.	दि./DATE
बनाया DRAWN	NS	NS	29-03-19
जाँचा CHECKED	SKS	SKS	29-03-19
स्वीकृत APPROVED	AG	AG	29-03-19

REV.	DATE	ALTERED / CHECKED / APPROVED	ZONE
R3	09.02.21	NS / SKS / AG	REVISED AS PER NTPC'S COMMENTS AND OGA UPDATES OF PANELS
R2	01.06.19	DRN NS / ALTERED NS / CHECKED SKS / APPROVED AG	REVISED AS PER NTPC'S COMMENTS AND MEETING DATED 19-03-2019.
R1	05.03.19	DRN NS / DESN NS / CHECKED SKS / APPROVED AG	REVISED AS PER NTPC'S COMMENTS AND MEETING DATED 25-02-2019.

विभाग DEPT. / कोड CODE / उलुपात / SCALE / कार्ड कोड CARD CODE

शीर्षक/TITLE
SWITCHYARD CONTROL ROOM BUILDING-
EQUIPMENT LAYOUT

ड्राईंग क्र./BHEL DRAWING NO. TB-397-510-003 — पुनः/REV. 03

ड्राईंग क्र./NTPC DRAWING NO. 9585-001-572-PVC-F-0047 — पुनः/REV. 03

पृष्ठ क्र./SHEET No. 03 — अगला पृष्ठ/NEXT SHEET --

COMPUTER DRG. PATH NAME :
REF. DRG. No.
SIGN. & DATE
INVENTORY No.

Annexure-1A

NTPC	PROJECT: PATRATU TPP (3X800MW) PACKAGE: AIR CONDITIONING SYSTEM FOR EPC PACKAGE MAIN SUPPLIER: BHEL CONTRACT NO.: 9585-001	LIST OF ITEMS REQUIRING QUALITY PLAN AND SUB- SUPPLIER APPROVAL	DOC. NO.: REVISION NO. : 00 DATE: 11/07/2019 PAGE : 1 OF 7

SL.NO.	ITEM	QP/INSPN CAT	QP NO. 9572-146-QVM-Q	PROPOSED SUBVENDORS BY MAIN CONTRACTOR	PLACE	SUB-SUPPLIER APPROVAL STATUS/ CATEGORY	REMARKS
1	Screw Chiller	II		York International	USA	A	Up to 300 TR
		II		Carrier Asia	China	A	Screw Chiller Up to 300TR. Centrifugal Chiller- up to 500TR
		II		Kirloskar Chiller (with Kirloskar Compressor)	Saswad, Pune	A	Up to 350TR
		II		DUNHAM-BUSH	Malaysia	A	Up to 350TR
		II		Daikin	Neemrana	A	Up to 185 TR
		II		Blue Star (with Hanbell Taiwan Compressor)	Thane	A	Up to 240TR
		II		Trane	USA	A	Up to 225 TR
2	Package AC	III		BHEL Approved source			
3	Precision Air Conditioner (10 TR)	III		BHEL Approved source			
4	Horizontal Centrifugal Pumps	I		KIRLOSKAR BROS LTD.	KIRLOSKARWADI	A	
				WILO MATHER & PLATT	PUNE	A	
				WILO MATHER & PLATT	KOLHAPUR		
				SAM TURBO	COIMBATORE	A	UP TO 1500 CUM/HR ONLY
				FLOWMORE	GHAZIABAD	A	
				FLOWMORE	SAHIBABAD	A	
				BEST AND CROMPTON	CHENNAI	A	
				JYOTI	VADODARA	A	
				WPIL	GHAZIABAD	A	

Amit

11/07/19

SL.NO.	ITEM	QP/INSPN CAT	QP NO. 9572-146-QVM-Q	PROPOSED SUBVENDORS BY MAIN CONTRACTOR	PLACE	SUB-SUPPLIER APPROVAL STATUS/ CATEGORY	REMARKS
				KISHORE PUMPS	PUNE	A	UPTO 500M3/HR ONLY RUBBERLINED PUMPS ALSO
				GRUNDFOS PUMPS INDIA PVT LTD	CHENNAI		HORIZONTAL UP TO 30 KW ONLY AND VERTICAL UP TO 45 KW ONLY (FOR APPLICATIONS WHERE NPSH IS NOT REQUIRED)
				SINTECH PRECISION	GHAZIABAD	A	HORIZONTAL UP TO 400 KW MOTOR RATING AND VERTICAL UP TO 30 KW MOTOR RATING
				KSB	PUNE	A	
				KSB	NASHIK	A	
				FLOWSERVE INDIA CONTROLS PVT LTD	COIMBATORE	A	HOIZONTAL CENTRIFUGAL PUMP UP TO 75 KW ONLY
				SU MOTOR	MUMBAI		HORIZONATL UPTO 500M3/HR ONLY RUBBERLINED PUMPS AND VERTICAL CENTRIFUGAL PUMPS UP TO 100CMH ONLY
5	Package Cooling Tower	III		BHEL Approved source			
6	Air Handling Units	III		BHEL Approved source			

Amit

11/07/19

SL.NO.	ITEM	QP/INSPN CAT	QP NO. 9572-146-QVM-Q	PROPOSED SUBVENDORS BY MAIN CONTRACTOR	PLACE	SUB-SUPPLIER APPROVAL STATUS/ CATEGORY	REMARKS
7A	Centrifugal Fans < 5KW	II		BHEL Approved source			
7B	Centrifugal Fans >= 5KW	I		KRUGER VENTILATION INDUSTRIES PTE LTD	SINGAPORE	A	UP to 150000 CMH
				HOWDEN SOLYVENT FLAKT INDIA PVT LTD,	CHENNAI	A	Up to 225000 CMH
				ALMONAROD (P) LIMITED	CHENNAI	A	Up to 60000 CMH
				PATEL AIRFLOW(EARLIER PATEL AIRTEMP)	AHMEDABAD	A	Up to 250000 CMH
				CB DOCTOR VENTILLATOR PVT LTD	AHMEDABAD	A	Up to 150000 CMH
				WOLTER VENTILATORS INDIA (P) LTD	BHIWADI	A	Up to 200000 CMH
				C DOCTOR &CO PVT LTD	KOLKATA	A	Up to 250000 CMH
				ADVANCE VENTILATION PVT LTD	SONEPAT,KUNDALI	A	Up to 250000 CMH
				SK SYSTEMS PVT LTD	SONEPAT	A	Up to 250000 CMH
				SUVIDHA AIR ENGINEERS	GANDHINAGAR	A	up to 190000 CMH
				M/s Suburban Industrial Works Pvt. Ltd	Kolkata	A	up to 75,000 CMH
				KRUGER VENTILATION INDUSTRIES (I) PVT LTD	SHAHPUR, THANE	A	Up to 90000 CMH
8A	Axial Flow Fans < 5 KW	II		BHEL Approved source			
8B	Axial Flow Fans >= 5 KW	I		KHAITAN FANS(I) LTD	KOLKATA	A	Up to 31000 CMH
				MARATHON ELECTRIC MOTORS(I) LTD(EARLIER ALSTOM INDUSTRIAL PRODUCT LTD)	KOLKATA	A	up to 50000 CMH

Amit

11/07/19

SL.NO.	ITEM	QP/INSPN CAT	QP NO. 9572-146-QVM-Q	PROPOSED SUBVENDORS BY MAIN CONTRACTOR	PLACE	SUB-SUPPLIER APPROVAL STATUS/ CATEGORY	REMARKS
				KRUGER VENTILATION INDUSTRIES	SINGAPORE	A	Up to 20000 CMH
				CB DOCTOR VENTILLATOR PVT LTD	AHMEDABAD	A	up to 50000 CMH
				HOWDEN SOLYVENT FLAKT INDIA PVT LTD,	CHENNAI	A	up to 125000 CMH
				C DOCTOR &CO PVT LTD	KOLKATA	A	up to 50000 CMH
				KRUGER VENTILATION INDUSTRIES (I) PVT LTD	SHAHPUR, THANE	A	Up to 6000 CMH
				NADI AIRTECHNICS PVT LTD	CHENNAI	A	Up to 15000 CMH
				ADVANCE VENTILATION PVT LTD	KUNDALI. SONEPAT	A	up to 50000 CMH
				SOLYVENT FLAKT	KOLKATA	A	CHANGED TO HOWDEN SOLYVENT INDIA PVT LTD, KANCHIPURAM,CHENNAI
				SK SYSTEMS PVT LTD	KUNDALI PHASE-II, SONEPAT, HARYANA	A	up to 50000 CMH
				SUVIDHA AIR ENGINEERS	GANDHINAGAR	A	up to 50000 CMH
				M/S SUBURBAN INDUSTRIAL WORKS PVT. LTD	KOLKATA	A	up to 15,000 CMH
				ALMONAROD (P) LIMITED	CHENNAI	A	Up to 14000 CMH
9	Propeller Fan (UP TO 2 HP)	III		BHEL Approved source			
10	Cassette / Split A C/ Window AC	III		BHEL Approved source			

Amit

11/07/19

SL.NO.	ITEM	QP/INSPN CAT	QP NO. 9572-146-QVM-Q	PROPOSED SUBVENDORS BY MAIN CONTRACTOR	PLACE	SUB-SUPPLIER APPROVAL STATUS/ CATEGORY	REMARKS
11	Filters	III		BHEL Approved source			
12	MS Pipe (Black / GI) (IS 1239 / IS 3589) (upto 1000 NB)	II		BHEL Approved source (BIS marked with manufacturer valid license)			
12A	Pipes & Fittings - CI	III		BHEL Approved source			
13	GI Sheets	III		BHEL Approved source			
14	CI Butterfly Valves (Size upto 600 NB & Pr. Class upto 150)	II		BHEL Approved source			
15	Ball Valve						
	i) For Sizes up to 100 NB and class up to 800	II		BHEL approved sources			
	ii) For Sizes>100 NB or class >800	I		WEIR BDK	HUBLI	A	SS Ball valves up to 500MM and class #600, CS Ball Valves up to 250 MM and class# 900, CS/ SS Ball valves up to 100 MM and class # 1500.
				MICRO FINISH VALVES PVT. LTD.	HUBLI	A	400NB CLASS#600 AND UP TO 600NB CLASS#300
				FLOW CHEM INDUSTRIES	KALOL	A	100NB CLASS#600,200NB CLASS#300, 50 NB CLASS#800
				L&T VALVES LIMITED	COIMBATORE	A	UPTO 150NB, CLASS #150/300, AND UPTO 50NB, CLASS #800
				PRECISSION ENGG CO VALVES PVT LTD	NASIK		FCS UP TO 50NB CLASS 800, CCS UP TO 400NB CLASS

Amit

11/07/19

SL.NO.	ITEM	QP/INSPN CAT	QP NO. 9572-146-QVM-Q	PROPOSED SUBVENDORS BY MAIN CONTRACTOR	PLACE	SUB-SUPPLIER APPROVAL STATUS/ CATEGORY	REMARKS
							150.
				BELGAUM AQUA VALVE PVT LTD	BELGAON		FCS UP TO 50NB CLASS 800, CCS UP TO 200NB CLASS 150.
				G M ENGINEERING PRIVATE LTD	RAJKOT	A	UP T0 400 NB AND CLASS #600
16	Balancing Valves	II		BHEL Approved source			
17	CI Gate/Globe Valve/ Check Valve (Size upto 600 NB & Rating Pr Class upto 300)	III		BHEL Approved source			
18	GM Gate / Globe/ Check Valves	III		BHEL Approved source			
19	3/2 way mixing valves	II (Indigenous Vendor) III (Foreign Vendor)		BHEL Approved source			
20	Thermal Insulation	III		BHEL Approved source			
21	Fire Damper (Motorized) with Single Phase Actuator	III		BHEL Approved source			
22	Condensing Units	III		BHEL Approved source			
23	Y Strainers	III		BHEL Approved source			

Amit

11/07/19

SL.NO.	ITEM	QP/INSPN CAT	QP NO. 9572-146-QVM-Q	PROPOSED SUBVENDORS BY MAIN CONTRACTOR	PLACE	SUB-SUPPLIER APPROVAL STATUS/ CATEGORY	REMARKS
24	Water Softening Plant (capacity up to 10CMH)	III		BHEL Approved source			
25	Volume Control Damper/Cowl/ NRD	III		BHEL Approved source			
26	Grilles/Diffusers/Louvers/	III		BHEL Approved source			
27	Pan Humidifier	III		BHEL Approved source			
28	Tank, Float valve	III		BHEL Approved source			

LEGEND:

1. QP/INSPNCATEGORY:

CAT-I: For these items the Quality Plans are approved by Owner and the final acceptance will be on physical inspection witness by Owner.
CAT-II: For these items the Quality Plans are approved by Owner, however no final inspection shall be done by owner. Final acceptance by Owner shall be on the basis of review of documentation as per approved QP.

CAT-III: For these items Quality control to be exercised as per Main Contractor Quality Assurance System. The final acceptance by NTPC/PVUN shall be on the basis of Certificate of Conformance (COC) by Main Contractor.

2. SYSTEM SUPPLIER / SUB-SUPPLIER APPROVAL STATUS CATEGORY

A- For these proposed vendor is acceptable to NTPC. To be indicated with letter 'A' in the list along with the condition of approval, if any.
DR- For these items "Detailed Required" for NTPC review. To be indicated with letter 'DR' in the list.

Amit
(Amit Kr. Hers)
BHEL

11/09/19
(Kamlesh Singh)
PVUHL

Vendor list identified for Ventilation system can be used for Electrical and C and I Items for Air-conditioning package (Same vendor and Item inspection category)

पीवीयून PVUN	**Project :** Patratu STPP 3X800 MW		**Sub-Vendor List** **Control & Instrumentation and Electrical Items**		**Doc No**	QA-C&I and Elect -VENT-00
	Package : Ventilation System Package				**Rev No**	1
	Main Contractor : BHEL				**Date**	27.06.2019
	Sub Contractor : Wollique Ventilation and Conditioning Pvt. Ltd.					
	Contract No. : 9585-001-148					1 of 7
Sl No.	**Item**	**QP/ Insp. Cat.**	**Acceptable Supplier As Per Database**	**Place of Manufacturing**	**Approval Status**	**Remarks**
	Control and Instrumentation Item list - Controlled items					
1	Electrical Actuator (With Gear Box, If Applicable)	II	Antrieb Technik Pvt Ltd	Chennai	A	for low torque application
			Auma	Bangalore	A	
			Limitorque	Faridabad	A	
			Rotork	Chennai/Banglore	A	
2	Instrument Cables (F, G & T/C Cables)	I (Refer - Note - 1)	Paramount Communication Ltd	Khuskhera	A	PVC, FRLS type
			Polycab	Daman	A	PVC, FRLS type
			Delton	Faridabad	A	PVC, FRLS type
			Kei	Bhiwadi	A	PVC, FRLS type
			Elkey Telelinks	Faridabad	A	PVC, FRLS type
			Cords	Kaharani	A	PVC, FRLS type
			Cords	Bhiwadi	A	PVC, FRLS type
			Nicco	Kolkata	A	PVC, FRLS type
			Universal Cable	Satna	A	PVC, FRLS type
			Thermocables	Hyderabad	A	PVC, FRLS type
			Gupta Power Inftrastructure Ltd.	Khurdha	A	PVC, FRLS type
			Cmi	Faridabad	A	PVC, FRLS type
			Advance Cables Pvt Ltd	Banglore	A	PVC, FRLS type
			Gemscab Industries Ltd	Bhiwadi	A	PVC, FRLS type
			Apar Industries Limited	Valsad	A	PVC, FRLS type
3	Terminal Block (Cage And Clamp Type)	III	Weidmuller	Germany	A	
			Phoenix	Germany / India	A	
			Wago	Germany / India	A	
			Elmex	Vadodara	A	Model should have CE Marking

Amit

P.F.P.C.H.L

Scanned by CamScanner

पीवीयून PVUN	**Project :** Patratu STPP 3X800 MW		**Sub-Vendor List** **Control & Instrumentation and Electrical Items**		**Doc No**	QA-C&I and Elect -VENT-00
	Package : Ventilation System Package				**Rev No**	1
	Main Contractor : BHEL				**Date**	27.06.2019
	Sub Contractor : Wollique Ventilation and Conditioning Pvt. Ltd.					
	Contract No. : 9585-001-148					2 of 7
Sl No.	**Item**	**QP/ Insp. Cat.**	**Acceptable Supplier As Per Database**	**Place of Manufacturing**	**Approval Status**	**Remarks**
	Following C&I items to be supplied as per main contractor approved sources meeting the NTPC Specification requirement					
1	Compression Fittings(Ss)	III	Main Contractor approved sources		A	
2	Conduits / Pipe (Gi)	III	Main Contractor approved sources		A	
3	Conduits Lead Coated (Flexible)	III	Main Contractor approved sources		A	
4	Flow Gauge	III	Main Contractor approved sources		A	
5	Flow Switch	III	Main Contractor approved sources		A	
6	FRP Junction Box	III	Main Contractor approved sources		A	
7	Hand Held Calibrator	III	Main Contractor approved sources		A	
8	Instrument Tube Fittings (Air)	III	Main Contractor approved sources		A	
9	Instrument Valve	III	Main Contractor approved sources		A	
10	Level Gauge (Transperent & Reflex, Tubular Type)	III	Main Contractor approved sources		A	
11	Level Indicator (Float & Board Type)	III	Main Contractor approved sources		A	
12	Level Switch - Float/Displacer Type/Paddle	III	Main Contractor approved sources		A	
13	Limit Swtch	III	Main Contractor approved sources		A	
14	Maintenance And Calibration Equpiment	III	Main Contractor approved sources		A	
15	Pr./ Vaccuum/ Dp Gauges	III	Main Contractor approved sources		A	
16	Press, Dp, Vaccum Switch	III	Main Contractor approved sources		A	
17	Solenoid Valve	III	Main Contractor approved sources		A	
18	Temperature Gauge(With Thermowell if applicable)	III	Main Contractor approved sources		A	
19	Temperature Switch	III	Main Contractor approved sources		A	
20	Valve Manifolds	III	Main Contractor approved sources		A	
21	Thermocouple, RTD and Thermowell	III	Main Contractor approved sources		A	
22	Temperature Transmitter	III	Main Contractor approved sources		A	

Scanned by CamScanner

पीवीयुएन PVUN	Project : Patratu STPP 3X800 MW		Sub-Vendor List Control & Instrumentation and Electrical Items		Doc No	QA-C&I and Elect -VENT-00
	Package : Ventilation System Package				Rev No	1
	Main Contractor : BHEL				Date	27.06.2019
	Sub Contractor : Wollique Ventilation and Conditioning Pvt. Ltd.					
	Contract No. : 9585-001-148					3 of 7
Sl No.	**Item**	**QP/ Insp. Cat.**	**Acceptable Supplier As Per Database**	**Place of Manufacturing**	**Approval Status**	**Remarks**
23	Humidistat / Thermostat	III	Main Contractor approved sources		A	
24	Electronic Transmitter (Pr./DP/Flow and Level)	III	Main Contractor approved sources		A	
25	Fiber optic cable	III	Main Contractor approved sources		A	
	Electrical Item list - Controlled items					
1	LT Motors	Refer Note 4	ABB	Faridabad/ Bangalore	A	Faridabad upto 55 kW, Bangalore above 55-200 KW kW
			Marathon	Kolkata	A	Also for flame proof motor
			KEC	Hubli/Bangalore	A	Hubli Upto 90kW, also for flame proof motor
			Bharat Bijlee	Mumbai	A	RQP, For Flamd proof also
			NGEF	Bangalore	A	Upto 15 kW
			TMEIC	Japan	A	
			Jyoti	Vadodara	A	
			LHP	Sholapur	A	Upto 200 kW
			Siemens	Mumbai	A	
2	LT VFD Panel	I	Powertech	Narela	A	Up to 415 V-18.5 KW, VVFD Drive: Schneider France
			Danfoss	Chennai	A	Upto 415V, 11kW, VFD drives with VFD sourced from Danfoss-Denmark / USA and Panel sourced from Rittal
			Yaskawa	Japan	DR	
			Rockwell Automation	Sahibabad	A	VFD from Rockwell (Allen Bradley)- USA, (Upto 415 V, 600 KW), VVF Drive RA / AB-USA, Authorised System integrator: M/s Saitech, Vadodara
			ABB	Bangalore	A	Up to 415 V -750 KW, VVVF Drive from ABB Finland / ABB Bangalore (UP to 2.2 KW), Authorised system integrator M/s Switching Circuit Kolkata.
			Siemens	Nasik	A	Up to 415 V-132 KW, VVVF Drive from Siemens Germany, Proposed System integrator Cot mac Pune- DR category
			CG Power & Industrial Solutions	Mandideep	A	Upto 50 HP (37KW)
			Vacon	Bangalore	A	VFD (NXP model) from VACON Finland, upto 400KW,415V and upto 900KW, 690V

Scanned by CamScanner

पीवीयुन PVUN	**Project :** Patratu STPP 3X800 MW		**Sub-Vendor List** **Control & Instrumentation and Electrical Items**		Doc No	QA-C&I and Elect -VENT-00
	Package : Ventilation System Package				Rev No	1
	Main Contractor : BHEL				Date	27.06.2019
	Sub Contractor : Wollique Ventilation and Conditioning Pvt. Ltd.					
	Contract No. : 9585-001-148					4 of 7
Sl No.	**Item**	**QP/ Insp. Cat.**	**Acceptable Supplier As Per Database**	**Place of Manufacturing**	**Approval Status**	**Remarks**
3	1.1KV Control Cable	CAT-I Refer Note 3	NICCO	Shamnagar, Kolkata	A	
			Torrent Cable Ltd	Nadiad	A	
			Incab	Pune	A	
			Polycab Wires Pvt Ltd	Daman	A	
			Hindustan Vidhut Product Ltd	Faridabad	A	
			KEI Industries	Bhiwadi	A	
			Delton	Faridabad	A	
			Paramount Cable	Khushkhera	A	
			Gemscab Industries	Bhiwadi	A	
			Radiant	Hyderabad	A	
			Universal Cables	Satna	A	
			Cords Cable	Bhiwadi	A	
			Elkay Telelink	Faridabad	A	
			Havells India Ltd	Alwar	A	
			R.R. kabel	Silvasa	A	
			Ravin Cables	Pune	A	
			Gupta Power Cable	Khurda	A	
			Thermocables	Hyderabad	A	
			Finolex	Pune	A	
			Sbee Cable	Bangalore	A	
			Suyog Cable	Vadodara	A	
4	Galvanized Cable Tray	Refer Note 5 II	M J Engg.	Okhla/Bhiwadi	A	
			Steelite Engg.	Mumbai	A	
			Amtech	Pune	A	Galvanizing at B.G. Shirke - Pune
			Inar Profile	Enkapalli	A	GALVANISATION AT VISHAKHA STEELS ALLIED-ANKAPALLI
			Indiana Gratings	Pune	A	
			TRG	Chennai	A	Galvanization at TM Radhakrishna Chetty & Co-Chennai
			Industrial Peforation	Kolkata	A	
			Kannade Anand Udg	Mumbai	A	Fabrication at their units: Plot No. 42, Morivali, MIDC, District Thane & Plot No.: D-35, Anand Nagar MIDC, Addl. Ambernath, Dist..Thane Galvanization and offer the galvanized cable trays for inspection at D-34 Anand Nagar MIDC, Addl. Ambernath, Dist.Thane.

Scanned by CamScanner

पीवीयुएन PVUN	**Project :** Patratu STPP 3X800 MW		**Sub-Vendor List** **Control & Instrumentation and Electrical Items**		Doc No	QA-C&I and Elect -VENT-00
	Package : Ventilation System Package				Rev No	1
	Main Contractor : BHEL				Date	27.06.2019
	Sub Contractor : Wollique Ventilation and Conditioning Pvt. Ltd.					
	Contract No. : 9585-001-148					5 of 7
Sl No.	**Item**	**QP/ Insp. Cat.**	**Acceptable Supplier As Per Database**	**Place of Manufacturing**	**Approval Status**	**Remarks**
			Unitech Fabricators	Howrah/Hoogly	A	
			Patny Systems	Hyderabad	A	Galvanisation at Gurpreet Galvaniser, Hydrabad
			India Electric Syndicate	Kolkata	A	Galvanization at BMW Industries/B.P Projects- Howrah
			Premier Power Products	Howrah	A	Galvanizing at Neha Galvanizer - Howrah
			VATCO	Mumbai	A	Galvanising at Sigma Mumbai
			Rukmani	Raipur	A	Ladder type cable trays only
			Rukmani	Hoogly	DR	
			Ratan Projects AND ENGG. PVT LTD .	Howrah	A	
5	Cable Tray Flexible Support Structure (GI)	II	Steelite Engg.	Mumbai	A	
			Vatco	Mumbai	A	Galvanizing at M/s. Sigma- Mumbai
			Premier Power Products	Howrah	A	Galvanizing at Neha Galvanizer - Howrah
			Ratan Projects	Howrah	A	Galvanisation at NTPC approved sources.
			Amtech Engg. Services	Pune	A	Galvanizing at M/s. B.G. Shirke-Pune
			Inar Profiles	Enkapalli	A	
			Indiana Gratings	Pune	A	Galvanising from Poona Galvaniser
			Industrial Peforation	Kolkata	A	
6	Cable Lugs/ Ferrules	III	Dowell	Mumbai	A	Refer Note 6
			3D	Umbergaon	A	
			Chetna	Nasik	A	
7	FQP of C & I and Electrical Equipment - Receipt, Storage & Erection	I				
8	DCDB, ACDB, MLDB, WRDB,WDB AFCB, UPSDB, DCFB, LIGHTING PANEL, LOCAL PANEL, CONTROL PANEL (NON PLC), SOLENOID BOARD, PUSH BUTTON, NON MOSAIC TYPE, LOCAL MOTOR STARTER, POWER JB, LOCAL CONTROL STATIONS, REMOTE PANEL, OIL FILTRATION PANEL, HT JUNCTION BOX ETC	I (All wall mounted fixed type indoor/outdoor LT switchgear shall be treated as inspection CAT-III)	Switching Circuits	Kolkata	A	
			Jakson	Greater Noida	A	
			Pyrotech	Udaipur	A	
			Positronics	Vadodara	A	
			Control Devices	Kolkata	A	
			Jolly Engineering	Kolkata	DR	

Scanned by CamScanner

पीवीयुएन PVUN	**Project :** Patratu STPP 3X800 MW		**Sub-Vendor List** **Control & Instrumentation and Electrical Items**		Doc No	QA-C&I and Elect -VENT-00
	Package : Ventilation System Package				Rev No	1
	Main Contractor : BHEL				Date	27.06.2019
	Sub Contractor : Wollique Ventilation and Conditioning Pvt. Ltd.					
	Contract No. : 9585-001-148					6 of 7
Sl No.	**Item**	**QP/ Insp. Cat.**	**Acceptable Supplier As Per Database**	**Place of Manufacturing**	**Approval Status**	**Remarks**
	Following Electrical items to be supplied as per main contractor approved sources meeting the NTPC Specification requirement					
1	Cable Glands	III	Main contractor approved sources		A	Refer Note 6
2	PVC conduit/Hume pipe/Lighting wire/GI pipes/HDPE pipe/GI steel rigid conduit/ Epoxy conduit	III	Main Contractor Approved Sources/ BIS Approved Sources		A	1-Refer Note 6 2 Galvanising wherever applicable to be done at NTPC approved sources or from Note 7
3	Galvanized JB, Switch Box, Link Boxes, Adopter Boxes, Industrial Receptacales, M.S. Rod, G.S. Flat G.I. Wire, Earth Wire & Lightning Protection, Trifoil, Cable Clamps, Ferrules	III	Main Contractor Approved Sources		A	Galvanising wherever applicable to be done at NTPC approved sources or from Note 7

LEGENDS :	
	1.0 SYSTEM SUPPLIER / SUB SUPPLIER APPROVAL STATUS CATEGORY
	A - For those items proposed vendor is acceptable to Customer. To be indicated with letter "A" in the list alognwith the condition of approval, if any.
	DR - For those items "Detailed Required" for Customer review. To be identified with letter "DR" in the list. For these items, vendor shall be proposed for owner acceptance with-in the agreed contract schedule of the package
	SQP-Standard Quality Plan RQP-Refernce Quality Plan
	2.0 QP INSPECTION CATEGORY :
	CAT - I : For those items the Quality Plans are approved by Customer and final acceptance will be on physical inspection witness by Customer
	CAT - II : For those items the Quality Plans are approved by Customer. However no physical inspection shall be done by Customer. The final acceptance by Customer shall be on the basis of review of documents.
	CAT - III : For those items Main supplier approves Quality Plans. The final acceptance by Customer shall be on the basis of Certificate of Conformance by main supplier.

Amit
11/7/19
(Amit Kr. Garg)
BHEL

P.P.Patil
Prashant P. Patil
AGM (QA & Engg.)

Scanned by CamScanner

पीवीयुएन PVUN	**Project :** Patratu STPP 3X800 MW	**Sub-Vendor List** **Control & Instrumentation and Electrical Items**	**Doc No** QA-C&I and Elect -VENT-00
	Package : Ventilation System Package		**Rev No** 1
	Main Contractor : BHEL		**Date** 27.06.2019
	Sub Contractor : Wollique Ventilation and Conditioning Pvt. Ltd.		
	Contract No. : 9585-001-148		

Sl No.	Item	QP/ Insp. Cat.	Acceptable Supplier As Per Database	Place of Manufacturing	Approval Status	Remarks
	UNITS/WORKS : Place of manufacturing- Place of main supplier of multi units/works.					
	* - Inspection category will be decided during vendor evaluation.					
NOTES: As applicable (if required)						
Note 1 :	For Insrument cable up to 1 KM inspection category CAT - III, For 1 KM to 2.5 KM Inspecton category CAT - II.					
Note 2 :	For the C & I instrumnts mounted on the skid of the main item or supplied as a integral part of the main item, instrument to be supplied as per proven practice of the manufacturer meeting the Customer technical specification requirement.					
Note 3 :	For C and I items, mandatory Spares to be treated as NTPC inspection category CAT - III.					
Note 4:	**For LT Motors:**					
	a) Up to 50 KW(CAT-III): Acceptance is based on COC of the manufacturer & the contractor confirming as follows:					
	It is hereby confirmed that the above mentioned motor /motors was/ were manufactured taking care of NTPC specific requirements regarding ambient temp., voltage & frequency variation, hot starts, pull out					
	b) for 50 KW to 75KW(CAT-III for manufacturers who have already supplied this range of motors to NTPC which have been commissioned and no adverse feedback has been reported from RIO/Project-site					
	It is hereby confirmed that the above mentioned motor /motors was/ were manufactured taking care of NTPC specific requirements regarding ambient temp., voltage & frequency variation, hot starts, pull out					
	c) Above 75 KW(CAT-I): as per NTPC approved Quality Plan					
Note 5:	**Category of inspection for LT Cables and Cable Trays:**					
	For Total Contract Quantity per Size			**Category of Inspection**		
	Less ≤ 2.5 KM			Cat-III - For the manufacturers having successfully supplied to NTPC Project-site through cor porate contract s at least 2 years back		
	For cable total quantity above 2.5 km & up to 10 km per size			Cat-II		
	For cable total quantity above 10 km per size/type			Cat-I		
Note 6:	VDE / CE / UL / CSA Marking Certification preferably from Third Party Agency or BIS Approval Letter shall be submitted for NTPC's Verification /Information.					
Note 7:	**List of Galvanisers**					
	1. M/s M J Engg,Delhi				15. M/s Sigma, Mumbai	
	2. M/s Rukmani Fab& Gal- Howrah				16. M/s Radhakrishnan Shetty, Chennai	
	3. M/s A.V. Engg, Kolkata				17. Karamtara Mumbai	
	4. M/s Inar Profiles, Vishakapatnam				18.Poona Galvanizers Pune	
	5. M/s Anand Udyog, Mumbai				19. Neha Galvanizer- Kolkata	
	6. M/s Techno Engg,Chandigarh				20. Unitech Fabricators & Galvanizers- Hoogly	
	7. M/S Steelite Engg, Mumbai					
Note 8:	List of sub-vendors is to be submitted along with QP for all the items identified as inspection category- I & II by the equipment Sub-Supplier.					
Note 9 :	For the items not appearing in the preaward list and falls in the scope of supply of the bidder, bidder and Customer will mutually discussed in future.					

Amit
11/7/19
(Amit Kr. Garg)
BHEL

11/07/2019
PRASHANT P. PATIL
AGM (QA & Engg.)

Scanned by CamScanner