COPYRIGHT AND CONFIDENTIAL
The information on this document is the property of BHARAT HEAVY ELECTRICALS LIMITED.
It must not be used directly or indirectly in anyway detrimental to the interest of the company.

1. Pre-qualification Criteria

1.1 The bidder should be manufacturer/supplier of current sensors for use in rolling stock application (locomotive/EMU/Metro) in India or abroad.

1.2 The bidder should be an “Regular” approved vendor of RDSO/CLW/Indian Railways for offered item. If not, if offer of bidder meets technical requirement, BHEL will approach and submit credentials/details furnished by bidder with their offer to customer i.e., CLW and await its decision for a maximum of one month from the date of document submission. The approval requested shall be for usage of offered transformer in “*Hotel Load Converter”* project. If approval is not received within this period, BHEL shall treat the offer as "Not meeting Pre-qualification criteria” and offer shall be rejected.

Extension beyond one month will not be given for whatsoever reason.

1.3 It is preferred that the bidder is the manufacturer of this item. If the bidder is importing the item, then minimum value addition in India shall be 20%. Bidder to confirm this in the offer. Value addition less than 20% is not acceptable.

1.4 Bidder should possess valid type test report for the item, conducted at an accredited laboratory as per standards mentioned in the specification at the time of bid submission.

2. Documents to be submitted:

2.1 Proof of supply of the item for rolling stock application (locomotive/EMU/Metro) in India or abroad directly or through any agency.

2.2 Copy of type test report.

2.3 Clause by clause compliance to technical specification as mentioned in clause no. 3.1.

3. Reference documents:

Purchase-cum-Technical Specification No.: PS/445/2759, Rev. 00 for Current Sensor (500A) for Hotel Load Converter

COPY RIGHT AND CONFIDENTIAL
The information on this document is the property of Bharat Heavy Electricals Limited.
It must not be used directly or indirectly in anyway detrimental to the interest of the company.

Purchase Specification for

Current Sensors (500A) for Hotel Load Converter

REVISION HISTORY SHEET

Rev. No.	DATE	Nature of Change	Reason	Prepared	Checked	Approved
00	19.02.2022	FIRST ISSUE	-	SRM	KLN	VK

COPY RIGHT AND CONFIDENTIAL
The information on this document is the property of Bharat Heavy Electricals Limited.
It must not be used directly or indirectly in anyway detrimental to the interest of the company.

1. INTRODUCTION

The Current sensor proposed to be procured against this specification are intended to be used in the Hotel Load Converters (HLC). The HLCs are used in IR (Indian Railways) locomotives.

2. FUNCTION

Current sensor (500A rms):

Three current sensors are used to measure the three phase output current of the Hotel Load Converter

3. POWER SUPPLY

Power supply of +/-15V DC, to activate the sensors shall be provided from the interface card present in the HLC.

4. TECHNICAL DETAILS

Primary Current (Nominal) I_{PN}	: 500 A rms
Measuring range @ ±15V (±5%)	: ±880 A peak
Secondary current (at I_{PN})	: 100 mA rms
Supply voltage	: ±15V (tolerance ±5%)
Conversion ratio	: 1:5000
Error (as % of I_{PN})	: ≤ ±0.5 at 25˚C ≤ ±1 at range of -40˚C to 85˚ C
Dielectric strength (at 50Hz for 1 minute)	: ≥ 12kV (Primary/secondary)
Measuring resistance (Minimum)	: 0Ω
Measuring resistance used in circuit	: 50Ω
Maximum operating temperature	: 85˚ C

5. DIMENSIONAL REQUIREMENT:

COPY RIGHT AND CONFIDENTIAL
The information on this document is the property of Bharat Heavy Electricals Limited.
It must not be used directly or indirectly in anyway detrimental to the interest of the company.

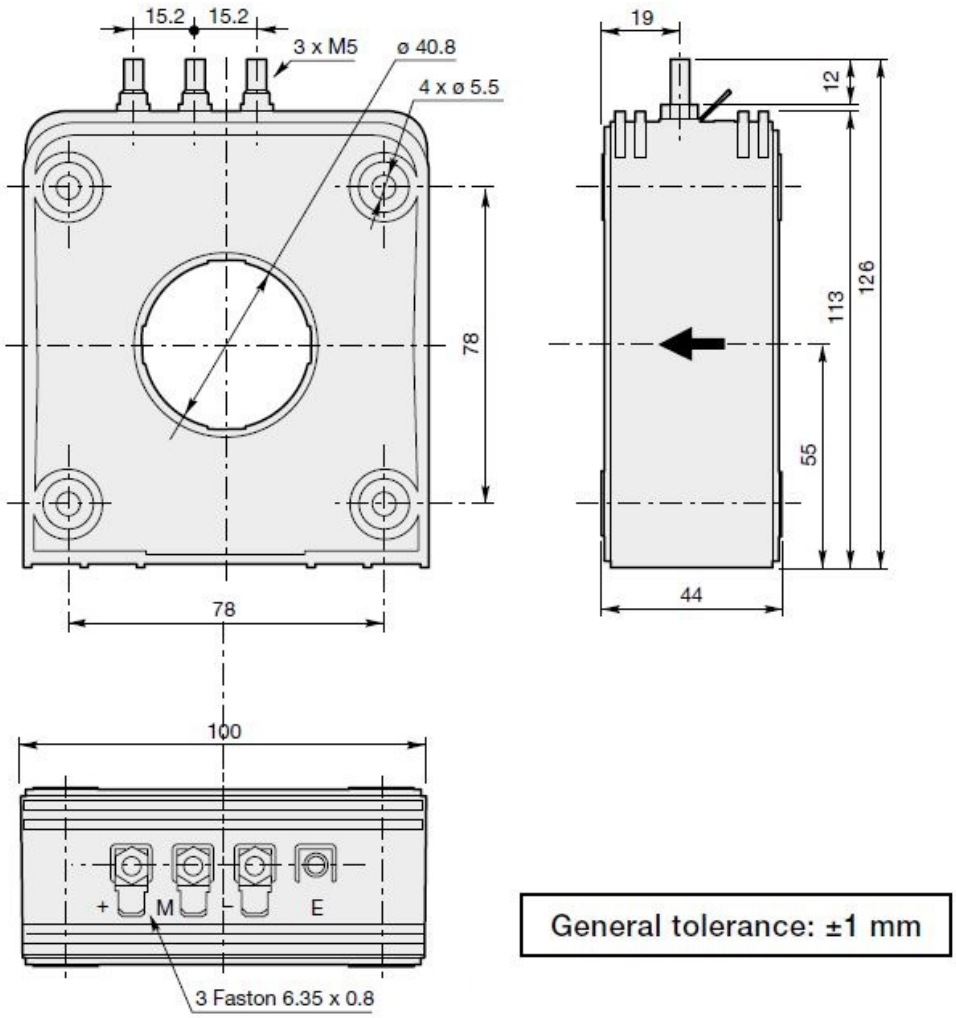

NOTE: Mounting dimensions have to be strictly within the general tolerance limit (±1 mm)

COPY RIGHT AND CONFIDENTIAL
The information on this document is the property of Bharat Heavy Electricals Limited.
It must not be used directly or indirectly in anyway detrimental to the interest of the company.

6. DOCUMENTATION

The supplier has to provide the following documents:

1. Datasheet of the sensor
2. 3D model in .stp /.igs format

7. APPLICABLE STANDARDS

EN 50155: Electronic equipment used in railway applications
EN 50121-3-2: Electromagnetic compatibility of equipment installed on board of railway vehicles
EN 50124-1: Insulation coordination
IEC 61373: Railway applications – Rolling stock equipment- Shock and vibration tests
-(Category 1- Class B equipment)

COPYRIGHT AND CONFIDENTIAL
The information on this document is the property of BHARAT HEAVY ELECTRICALS LIMITED.
It must not be used directly or indirectly in anyway detrimental to the interest of the company.

1. Pre-qualification Criteria

1.1 The bidder should be manufacturer/supplier of current sensors for use in rolling stock application (locomotive/EMU/Metro) in India or abroad.

1.2 The bidder should be an “Approved” vendor of RDSO/CLW/Indian Railways. If not, the bidder shall approach and submit its credentials to RDSO/CLW/Indian railways and obtain approval within a period of one month from the date of tender opening. The approval shall be for usage of offered item in Hotel Load Converter project. If approval is not received within this period, BHEL shall treat the offer as "Not meeting Pre-qualification criteria” and offer shall be rejected.

Extension beyond one month will not be given for whatsoever reason.

1.3 It is preferred that the bidder is the manufacturer of this item. If the bidder is importing the item, then minimum value addition in India shall be 20%. Bidder to confirm this in the offer. Value addition less than 20% is not acceptable.

1.4 Bidder should possess valid type test report for the item not older than five years, conducted at an accredited laboratory as per standards mentioned in the specification at the time of bid submission.

2. Documents to be submitted:

2.1 Proof of supply of the item for rolling stock application (locomotive/EMU/Metro) in India or abroad directly or through any agency.

2.2 Copy of type test report.

2.3 Clause by clause compliance to technical specification as mentioned in clause no. 3.1.

3. Reference documents:

Purchase-cum-Technical Specification No.: PS/445/2758, Rev. 00 for Current Sensor (1000A) for Hotel Load Converter

COPY RIGHT AND CONFIDENTIAL
The information on this document is the property of Bharat Heavy Electricals Limited.
It must not be used directly or indirectly in anyway detrimental to the interest of the company.

Purchase Specification for

Current Sensors (1000A) for Hotel Load Converter

REVISION HISTORY SHEET

Rev. No.	DATE	Nature of Change	Reason	Prepared	Checked	Approved
00	19.02.2022	FIRST ISSUE	-	SRM	KLN	VK

COPY RIGHT AND CONFIDENTIAL
The information on this document is the property of Bharat Heavy Electricals Limited.
It must not be used directly or indirectly in anyway detrimental to the interest of the company.

1. INTRODUCTION

The Current sensors proposed to be procured against this specification are intended to be used in the Hotel Load Converters (HLC). The HLCs are used in IR (Indian Railways) locomotives.

The sensors shall be of traction grade and shall have proper insulation between primary, secondary and control supplies.

1. INTRODUCTION

The sensor shall be of traction grade and shall have proper insulation between primary, secondary and control supplies.

2. FUNCTION

Input current sensor (1000A rms):

One number of current sensor is used to measure the single phase input current of the Hotel Load Converter.

3. POWER SUPPLY

Power supply of +/-15V DC, to activate the sensors shall be provided from the interface card present in the HLC.

4. TECHNICAL DETAILS

PART 1: INPUT CURRENT SENSOR (1000A rms)

Primary Current (Nominal) I_{PN}	: 1000 A rms
Measuring range @ ±15V (±5%)	: ±1200 A peak
Secondary current (at I_{PN})	: 200 mA rms
Supply voltage	: ±15V (tolerance ±5%)
Conversion ratio	: 1:5000
Error (as % of I_{PN})	: ≤ ±0.5 at 25˚C
	≤ ±1 at range of -40˚C to 85˚ C
Dielectric strength (at 50Hz for 1 minute)	: ≥ 12kV (Primary/secondary)
Measuring resistance (Minimum)	: 0Ω
Measuring resistance used in circuit	: 11Ω
Maximum operating temperature	: 85˚ C

COPY RIGHT AND CONFIDENTIAL
The information on this document is the property of Bharat Heavy Electricals Limited.
It must not be used directly or indirectly in anyway detrimental to the interest of the company.

5. DIMENSIONAL REQUIREMENT:

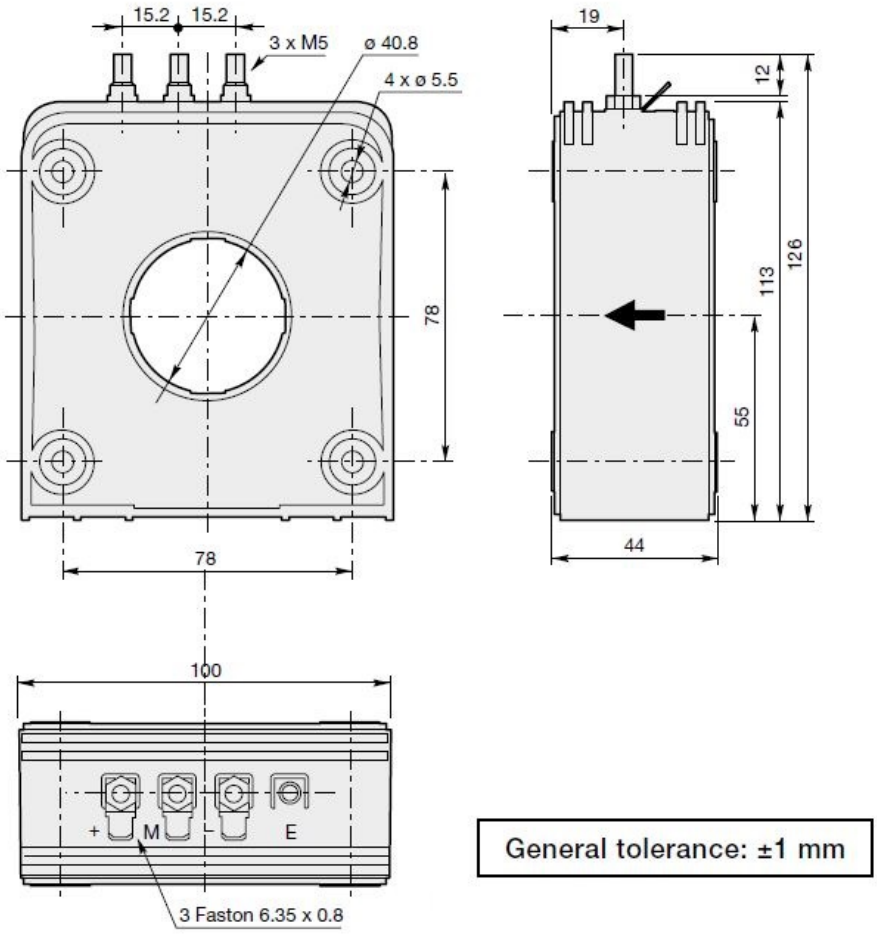

NOTE: Mounting dimensions have to be strictly within the general tolerance limit (±1 mm)

COPY RIGHT AND CONFIDENTIAL
The information on this document is the property of Bharat Heavy Electricals Limited.
It must not be used directly or indirectly in anyway detrimental to the interest of the company.

6. DOCUMENTATION

The supplier has to provide the following documents:

1. Datasheet of the sensor
2. 3D model in .stp /.igs format

7. APPLICABLE STANDARDS

EN 50155: Electronic equipment used in railway applications
EN 50121-3-2: Electromagnetic compatibility of equipment installed on board of railway vehicles
EN 50124-1: Insulation coordination
IEC 61373: Railway applications – Rolling stock equipment- Shock and vibration tests
-(Category 1- Class B equipment)

COPYRIGHT AND CONFIDENTIAL
The information on this document is the property of BHARAT HEAVY ELECTRICALS LIMITED.
It must not be used directly or indirectly in anyway detrimental to the interest of the company.

1. Pre-qualification Criteria

1.1 The bidder should be manufacturer/supplier of current sensors for use in rolling stock application (locomotive/EMU/Metro) in India or abroad.

1.2 The bidder should be an “Regular” approved vendor of RDSO/CLW/Indian Railways for offered item. If not, if offer of bidder meets technical requirement, BHEL will approach and submit credentials/details furnished by bidder with their offer to customer i.e., CLW and await its decision for a maximum of one month from the date of document submission. The approval requested shall be for usage of offered transformer in “*Hotel Load Converter”* project. If approval is not received within this period, BHEL shall treat the offer as "Not meeting Pre-qualification criteria” and offer shall be rejected.

Extension beyond one month will not be given for whatsoever reason.

1.3 It is preferred that the bidder is the manufacturer of this item. If the bidder is importing the item, then minimum value addition in India shall be 20%. Bidder to confirm this in the offer. Value addition less than 20% is not acceptable.

1.4 Bidder should possess valid type test report for the item, conducted at an accredited laboratory as per standards mentioned in the specification at the time of bid submission.

2. Documents to be submitted:

2.1 Proof of supply of the item for rolling stock application (locomotive/EMU/Metro) in India or abroad directly or through any agency.

2.2 Copy of type test report.

2.3 Clause by clause compliance to technical specification as mentioned in clause no. 3.1.

3. Reference documents:

Purchase-cum-Technical Specification No.: PS/445/2761, Rev. 00 for Voltage Sensor 2000VDC for Hotel Load Converter.

COPYRIGHT AND CONFIDENTIAL
The information on this document is the property of Bharat Heavy Electricals Limited.
It must not be used directly or indirectly in anyway detrimental to the interest of the company.

Purchase Specification for

Voltage sensor 2000VDC for Hotel Load Converter

REVISION HISTORY SHEET

Rev. No.	DATE	Nature of Change	Reason	Prepared	Checked	Approved
00	03.03.2022	FIRST ISSUE	-	SRM	KLN	VK

COPYRIGHT AND CONFIDENTIAL
The information on this document is the property of Bharat Heavy Electricals Limited.
It must not be used directly or indirectly in anyway detrimental to the interest of the company.

1. INTRODUCTION

The AC Voltage sensor proposed to be procured against this specification is intended to be used in the Hotel Load Converters (HLC). The HLCs are used in IR (Indian Railways) and mounted inside WAP7 locomotives.

The sensor shall be of traction grade and shall have high immunity against ambient electric and magnetic fields with proper insulation between primary, secondary and control supplies.

2. FUNCTION

The voltage sensor proposed in this specification is used to measure DC link voltage of Hotel Load Converter.

3. POWER SUPPLY

Power supply of +/-15V DC, for powering the sensor shall be provided from the interface card present in the HLC.

4. TECHNICAL DETAILS

Max Voltage (V_{PN})	: 2000 V rms
Secondary current (at V_{PN})	: 50 mA rms
Supply voltage	: ±15V (tolerance ±5%)
Error (as % of V_{PN})	: ≤ ±1 at 25˚C
	≤ ±1.7 at range of -40˚C to 85˚ C
Measuring resistance (Minimum)	: 0Ω
Measuring resistance (Maximum)	: ≥ 100Ω
Maximum operating temperature	: 85˚ C

COPYRIGHT AND CONFIDENTIAL
The information on this document is the property of Bharat Heavy Electricals Limited.
It must not be used directly or indirectly in anyway detrimental to the interest of the company.

5. DIMENSIONAL REQUIREMENT:

Mounting footprint and limiting dimensions shall be strictly as shown below. If mounting footprint differs, suitable adaptor plate/arrangement should be provided along with the equipment.

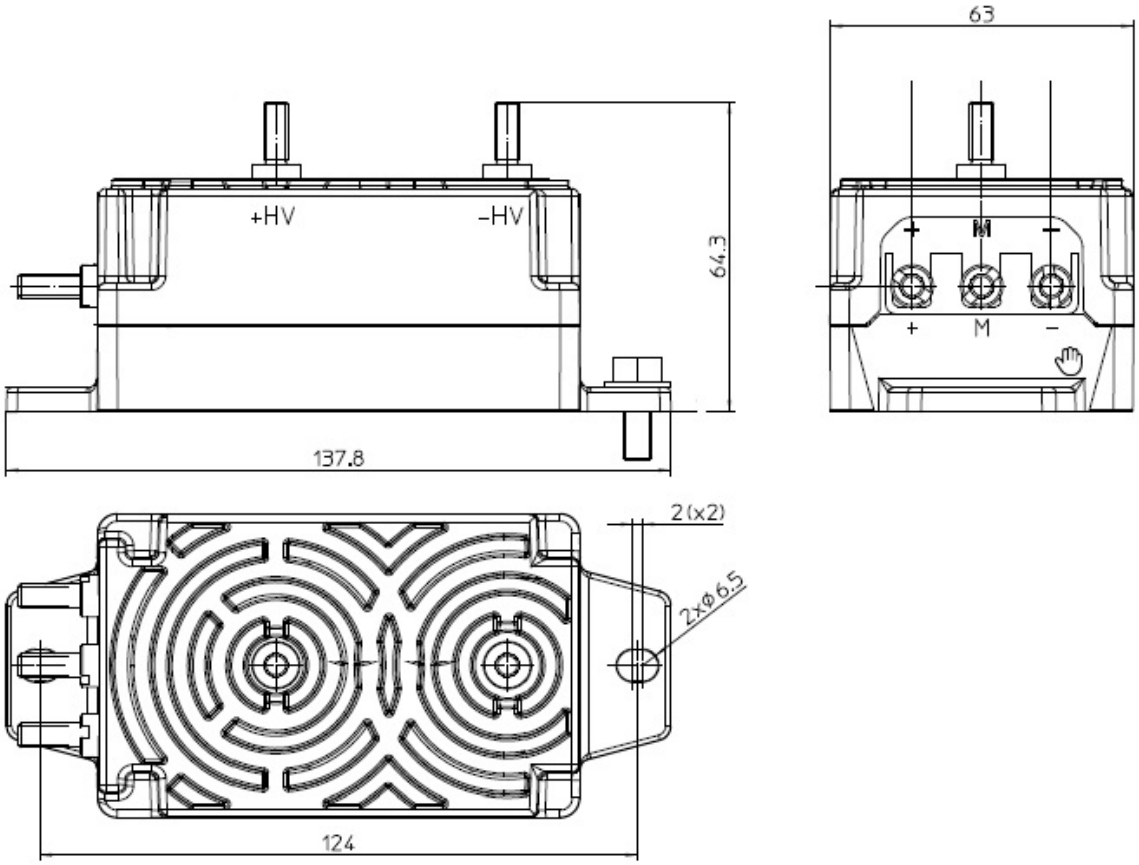

6. DOCUMENTATION

The supplier has to provide the following documents:

1. Datasheet of the sensor
2. Type test reports
3. 3D model in .stp /.igs format

7. APPLICABLE STANDARDS

EN 50155: Electronic equipment used in railway applications
EN 50121-3-2: Electromagnetic compatibility of equipment installed on board of railway vehicles
EN 50124-1: Insulation coordination
IEC 61373: Railway applications – Rolling stock equipment- Shock and vibration tests
-(Category 1- Class B equipment)

COPYRIGHT AND CONFIDENTIAL
The information on this document is the property of BHARAT HEAVY ELECTRICALS LIMITED.
It must not be used directly or indirectly in anyway detrimental to the interest of the company.

1. Pre-qualification Criteria

1.1 The bidder should be manufacturer/supplier of current sensors for use in rolling stock application (locomotive/EMU/Metro) in India or abroad.

1.2 The bidder should be an “Regular” approved vendor of RDSO/CLW/Indian Railways for offered item. If not, if offer of bidder meets technical requirement, BHEL will approach and submit credentials/details furnished by bidder with their offer to customer i.e., CLW and await its decision for a maximum of one month from the date of document submission. The approval requested shall be for usage of offered transformer in “*Hotel Load Converter”* project. If approval is not received within this period, BHEL shall treat the offer as "Not meeting Pre-qualification criteria” and offer shall be rejected.

Extension beyond one month will not be given for whatsoever reason.

1.3 It is preferred that the bidder is the manufacturer of this item. If the bidder is importing the item, then minimum value addition in India shall be 20%. Bidder to confirm this in the offer. Value addition less than 20% is not acceptable.

1.4 Bidder should possess valid type test report for the item, conducted at an accredited laboratory as per standards mentioned in the specification at the time of bid submission.

2. Documents to be submitted:

2.1 Proof of supply of the item for rolling stock application (locomotive/EMU/Metro) in India or abroad directly or through any agency.

2.2 Copy of type test report.

2.3 Clause by clause compliance to technical specification as mentioned in clause no. 3.1.

3. Reference documents:

Purchase-cum-Technical Specification No.: PS/445/2760, Rev. 00 for Voltage Sensor (1500VAC) for Hotel Load Converter.

Rev. 00	**Approved by:** Venkateshalu K		
	Prepared by: Girish Chand	**Department:** Traction Engg.	**Date:** 22.02.2022

COPY RIGHT AND CONFIDENTIAL
The information on this document is the property of Bharat Heavy Electricals Limited.
It must not be used directly or indirectly in anyway detrimental to the interest of the company.

Purchase Specification for

Voltage sensor (1500VAC) for Hotel Load Converter

REVISION HISTORY SHEET

Rev. No.	DATE	Nature of Change	Reason	Prepared	Checked	Approved
00	21.02.2022	FIRST ISSUE	-	SRM	KLN	VK

COPY RIGHT AND CONFIDENTIAL
The information on this document is the property of Bharat Heavy Electricals Limited.
It must not be used directly or indirectly in anyway detrimental to the interest of the company.

1. INTRODUCTION

The AC Voltage sensor proposed to be procured against this specification is intended to be used in the Hotel Load Converters (HLC). The HLCs are used in IR (Indian Railways) locomotives.

The sensor shall be of traction grade and shall have high immunity against ambient electric and magnetic fields with proper insulation between primary, secondary and control supplies.

2. FUNCTION

One Number of voltage sensor is used as the input voltage sensor to measure the single phase voltage provided as the input supply to HLC by the hotel load winding of the traction transformer.

Three Numbers of voltage sensors are used to measure the three phase voltage output of the Hotel Load Converter.

3. POWER SUPPLY

Power supply of +/-15V DC, to activate the sensors shall be provided from the interface card present in the HLC.

COPY RIGHT AND CONFIDENTIAL
The information on this document is the property of Bharat Heavy Electricals Limited.
It must not be used directly or indirectly in anyway detrimental to the interest of the company.

4. TECHNICAL DETAILS

Primary Voltage (Nominal) V_{PN}	: 1500 V rms
Measuring range	: ±2250 V peak
Secondary current (at V_{PN})	: 50 mA rms
Supply voltage	: ±15V (tolerance ±5%)
Error (as % of V_{PN})	: ≤ ±1 at 25˚C
	≤ ±1.7 at range of -40˚C to 85˚ C
Dielectric strength (at 50Hz for 1 minute)	: ≥ 8kV
Measuring resistance (Minimum)	: 0Ω
Measuring resistance (Maximum)	: ≥ 100Ω
Maximum operating temperature	: 85˚ C

DIMENSIONAL REQUIREMENT:

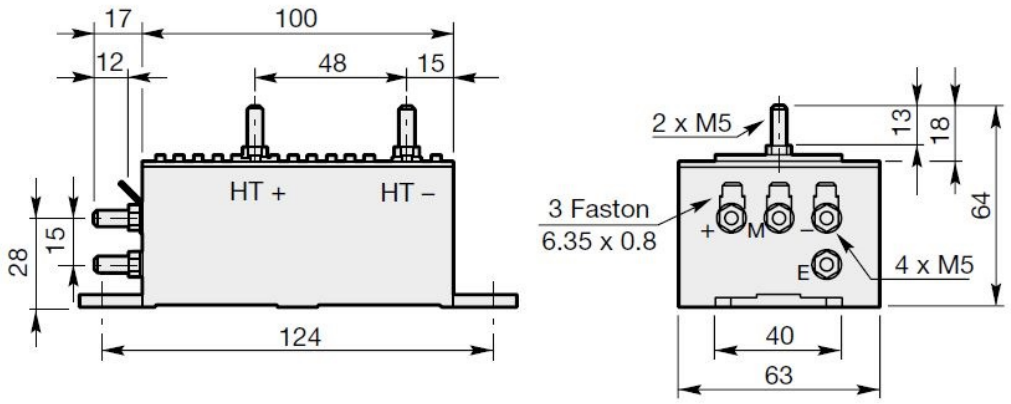

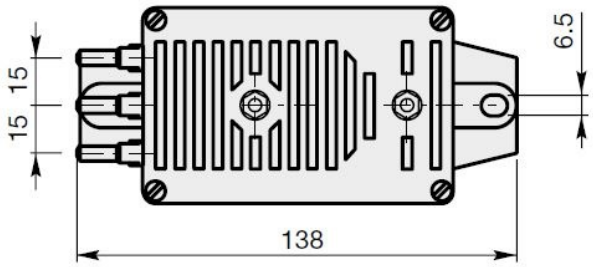

General tolerance: ±1 mm

NOTE: Mounting dimensions have to be strictly within the general tolerance limit (±1 mm)

COPY RIGHT AND CONFIDENTIAL
The information on this document is the property of Bharat Heavy Electricals Limited.
It must not be used directly or indirectly in anyway detrimental to the interest of the company.

5. DOCUMENTATION

The supplier has to provide the following documents:

1. Datasheet of the sensor
2. 3D model in .stp /.igs format

6. APPLICABLE STANDARDS

EN 50155: Electronic equipment used in railway applications
EN 50121-3-2: Electromagnetic compatibility of equipment installed on board of railway vehicles
EN 50124-1: Insulation coordination
IEC 61373: Railway applications – Rolling stock equipment- Shock and vibration tests
-(Category 1- Class B equipment)