BHARAT HEAVY ELECTRICALS LIMITED
MM / RM / PURCHASE / C&F
BHEL / TRICHY-620 014.

ANNEXURE-A Rev 01
ENQ.No.1402100016

Dt.01-07-2021

Enquiry Terms & Conditions for Supply of Gr.91 Formed Fittings

Note: This Annexure has to be mandatorily filled & signed by the manufacturer (or) mill and submitted along with Technical bid.

Any deviation to the below mentioned terms shall be stated specifically in the comments column for each term and also in case of acceptance to our terms, it will be construed that the whole term is understood and agreed in totality without any deviation. (If otherwise mentioned).

Sl No	BHEL Requirements	Supplier Comments
01	**Material specification:** Supply of Gr.91 Formed Fittings shall be made strictly as per **Specifications, Drawings and TDC** as mentioned in the enquiry.	
02	**Specification, Size & Quantity:** a) All the **P91 Fittings** are to be supplied fully meeting the applicable **TDC 423/09, BHEL Drawings and Specification**. If there is any deviation, the same should be mentioned clearly in the offer itself. b) TC in FORM IIIC, works TC, Raw Material TC, UT report, LPI report and other test certificates as called in TDC 423/09 shall be sent along with supply. c) Before start of production the manufacturer shall be submit a Manufacturing and Inspection Plan (MIP) to **BHEL product QA** for approval **(Being a New Supplier)**. d) **Confirmation for Pre-Qualification Requirements (PQR) along with all necessary documents shall be submitted.** e) Supply of P91 Fittings shall be as per latest IBR amendment dt.15.04.15. f) Inspection by authorized inspection agency as listed in the annexure enclosed. g) Ends shall be protected with suitable End covers. h) Quantity shall be as given in enquiry.	
03	**Offer Submission:** a) This Tender is hosted in EPS portal & offer to be submitted through EPS portal only. You are requested to submit your 2 parts offer before due date & time of the enquiry through NIC (https://eprocurebhel.co.in) only. b) Offer is to be submitted in TWO part bids system (Technical bid + Price bid) in the E-Procurement NIC PORTAL (https://eprocurebhel.co.in) ONLY. c) Scanned copy of the filled Annexure-A, Tender documents etc., shall be uploaded in the EPS portal. d) At its option, BHEL may consider extending the due date/s for the tender openings. Sufficient notice would be given by BHEL for such extensions and it will be published as corrigendum in following websites, **https://eprocurebhel.co.in** **http://www.bhel.com/tender/** e) Acceptance of offer will be subject to existing customer approval.	
04	**Reverse Auction** BHEL shall be resorting to Reverse Auction (RA) (Guidelines as available on www.bhel.com) for this tender. RA shall be conducted among the techno-commercially qualified bidders. Price bids of all techno-commercially qualified bidders shall be opened and same shall be considered for RA. In case any bidder(s) do(es) not participate in online Reverse Auction, their sealed envelope price bid along with applicable loading, if any, shall be considered for ranking.	

05	**Authorization for participation in EPS portal through DSC: E-Tender. Participation requirements:** Either Principal or authorized agent shall register their Digital Signature Certificate (DSC) (Class 3- SHA2- 2048 BIT- SIGNING & ENCRYPTION). Suppliers are advised to go through the FAQ available in the web portal (https://eprocurebhel.co.in). DSC shall be registered for the authorized person and all transaction done using that DSC against our tenders shall be taken as valid communication and shall be binding on principal/agent and is valid legally. **For foreign Principal** In case of Principal (being foreigner), they may apply for DSC through Indian embassy at their country and can register with us for participating in E-tenders. Details of the applicable procedure is available in the webpage http://www.cca.gov.in/cca/. **For Indian agent** In case of agents participating/registering their DSC (of authorized person), it will be at the sole authorization of principal to their agents to participate on their behalf and all transactions done using that DSC against our tenders shall be known as valid communication and shall binding on principal and is legally valid.	
06	**Validity:** The offers shall be kept open for acceptance for 90 days from the date of Tender opening. Once the tenders are submitted, rates cannot be changed on any grounds.	
07	**Delivery**: The offer shall clearly indicate delivery period in **fixed number of weeks/Months** from the date of Purchase Order.	
08	**Goods and Service Tax (GST)** **Indigenous suppliers:** • Response to Tenders for Indigenous supplier will be entertained only if the vendor has a valid GST registration No (GSTIN) which should be clearly mentioned in the offer. If the dealer is exempted from GST registration, a declaration with due supporting documents need to be furnished for considering the offer. Dealers under composition scheme should declare that he is a composition dealer supported by the screen shot taken from GST portal. The dealer has to submit necessary documents if there is any change in status under GST. • Supplier shall mention their GSTIN in all their invoices (incl. credit Notes, Debit Notes) and invoices shall be in the format as specified/prescribed under GST laws. Invoices shall necessarily contain Invoice number (in case of multiple numbering system is being followed for billing like SAP invoice no, commercial invoice no etc., then the Invoice No. which is linked/uploaded in GSTN network shall be clearly indicated), Billed to party (with GSTIN) & Shipped to party details, item description as per PO, Quantity, Rate, Value, applicable taxes with nomenclature (like IGST, SGST, CGST & UTGST) separately, HSN/ SAC Code, Place of Supply etc. • All invoices shall bear the HSN Code for each item separately (Harmonized System of Nomenclature)/ SAC code (Services Accounting Code). • Invoices will be processed only upon completion of statutory requirement and further subject to following: o Vendor declaring such invoice in Form GST ANX-1 o Receipt of Goods or Services and Tax invoice by BHEL • As the continuous uploading of tax invoices in GSTN portal (in GST ANX-1) is available for all (i.e. both Small & Large) tax payers under proposed new GST Return System, all invoices raised on BHEL may be uploaded immediately in GST portal on despatch of material /rendering of services. The supplier shall ensure availability of Invoice in GST portal before submission of invoice to BHEL. Invoices will be admitted by BHEL only if the invoices are available in GSTN portal (in BHEL's GST ANX-2). • In case of discrepancy in the data uploaded by the supplier in the GSTN portal or in case of any shortages or rejection in the supply, then BHEL will not be able to avail the tax credit and will notify the supplier of the same. Supplier has to rectify the data discrepancy in the GSTN portal or issue credit note or debit note (details also to be uploaded in GSTN portal) for the shortages or rejections in the supplies or additional claims, within the calendar month informed by BHEL. • In cases where invoice details have been uploaded by the vendor but failed to remit the GST amount to GST Department (Form PMT-08 or Form GST RET-01 to be submitted) within stipulated time, then GST paid on the invoices pertaining to the month for which GST return not filed by the vendor will be recovered from the vendor along with the applicable interest (currently 24% p.a) and all subsequent bills of the vendor will not be processed till filing of the GST return by the vendor • In case GST credit is denied to BHEL due to non-receipt or delayed receipt of goods and/ or tax invoice or expiry of timeline prescribed in GST law for availing such ITC, or any other reasons not attributable to BHEL, GST amount claimed in the invoice shall be disallowed to the vendor.	

- Where any GST liability arising on BHEL under Reverse Charge (RCM), the vendor has to submit the invoices to BHEL well within the timeline prescribed in GST Law, to enable BHEL to discharge the GST liability. If there is a delay in submission of invoice by the vendor resulting in delayed payment of GST by BHEL along with Interest, then such Interest payable or paid shall be recovered from the vendor.
- Under GST regime, BHEL has to discharge GST liability on LD recovered from suppliers/contracts. Hence applicable GST shall also be recoverable from suppliers/contractors on LD amount. For this Tax Invoice will be issued by BHEL indicating the respective supply invoice number.
- GST TDS will be deducted as per Section 51 of CGST Act 2017 and in line with Notification 50/2018 – Central Tax dated 13.09.2018. GST TDS certificate which will be generated in GST portal subsequent to vendor accepting the TDS deduction in the GST portal, will be issued to the vendor.
- GST CREDIT: Suppliers are advised to get registered to GSTN portal. Tenderer under "GST credit" shall be preferred.

Import Suppliers:
Supplier shall mention the HSN code of each item quoted by them in the offer. The HSN shall be mentioned in the Invoice also for each item without fail.

Since GST is implemented, the taxes & duties will prevail as per the government notification/ guidelines. Our Provisional GST registration no. is **33AAACB4146P2ZL**. However, it will be mandatory to confirm from BHEL for this mentioned GST no. Suppliers may quote their GST no with valid proof in the quotation. Also before quoting of tender it is suggested to consider all the factors in line with GST guidelines for input tax credit to arrive ranking of quoted suppliers.

09 **Indigenous vendors – Terms of delivery:**

- Bidders should submit their offer on FOR Destination -BHEL Stores, Trichy basis. The quote should be inclusive of all charges, including testing, packing & forwarding, inspection, Insurance etc. (Ex-Works offers will not be considered).
- The soft copies of the Invoice, LR copy & Test certificates shall be forwarded to BHEL immediately after dispatch.

10 **IMPORT Vendors - Terms of Delivery:**

a) Import vendors to submit offers on CFR (Cost & Freight), Chennai port (LILO – Liner in Liner Out) basis.
b) Port of loading should be indicated without fail.
c) Port of discharge should be Chennai.
d) The preferred shipment mode "**Containerized Cargo** or **Break Bulk**" shall be specified clearly in the offer.

FOR CFR INCO TERMS – CONTAINERIZED CARGO

a.) For CFR terms, moved through CONTAINERS (Suppliers should clearly specify this in their offer) it would be presumed by BHEL that the freight charges quoted is on LILO (LINER IN LINER OUT) basis including extra charges, if any, like Container Imbalance Charges, Trade Imbalance charges or any other charges payable to the Liner. No other charges other than the quoted Freight rate will be paid by BHEL excepting applicable Terminal Handling Charges, Container cleaning Charges, DO charges to Shipping Liner at Discharge Port. 14 FREE DAYS FOR Container detention shall be provided.
b.) In case of shipment through Containers on CFR basis, the BL should bear the endorsement that "14 free days for Container Detention is applicable".

BREAKBULK CARGO:

a) For CFR terms, moved through BREAK BULK BASIS (Suppliers should clearly specify this in their offer) it would be presumed by BHEL that the freight charges quoted is on LILO (LINER IN LINER OUT) basis.

b) The materials will be Custom cleared from Port itself.

INFORMATION TO IMPORT SUPPLIERS:

a) Indian Customs imposed a penalty on late filing of Bill of Entries (Air/Sea Shipments) by the importer. Bill of Entry is Required to be Filed Latest by the End of Day Preceding the Day (including Holidays) of Arrival of the Vessel for sea shipments and by the end of same day on arrival of air shipment. Penalty for not filing Bill of Entry within the specified time period is Rs.5000/- per day (for Initial 03 days) & Rs.10000/- per day (thereafter).
b) The vendor should furnish the Non-Negotiable Documents (Air Way Bill/Bill of Lading, Commercial Invoice, Packing List, and Certificate of Origin) either by email or post/courier to BHEL well before the landing of cargo at final port of discharge.
c) Vendor will be held responsible for the penalty arises against the late filing of Bill Of entry due to:
   Non availability of Non-Negotiable Documents (NNDs) before the cargo arrival
   Discrepancy in documents

Short landing of Consignments (For shipments on CFR/CPT/CIF/CIP – Chennai Port)

d) All the shipments for the contracts (POs) finalized on CFR -Chennai Port basis

(i) Delivery Orders involving multiple agencies like liners/freight forwarders are not allowed. There must be a single agency office at the final discharge Port (Chennai) for issuing the Delivery Order to BHEL.

(ii) The detention/demurrage charges arising due to the nomination of containers under single BL to different/ multiple CFS by the liner will be deducted from Vendor's bills only.

(iii) The detention/demurrage charges arise due to the delay in collection of Delivery Orders from multiple agencies of liner/freight forwarder also whose offices are not at available Chennai, the same amount will be deducted from Vendor's bills only.

(iv) Apart from the normal charges like Terminal Handling Charges, Container cleaning Charges, Delivery Order Charges at final port of discharge no other charges will be borne by BHEL.

(v) The liner/freight forwarders should be properly communicated by the Vendor for not to claim such charges for issuing Delivery Order. If the liner/freight forwarder claims such charges in their invoices, the same amount will be deducted from the Vendor bills without any prior intimation in order to avoid the delay in Customs clearance. The likely additional/hidden costs or charges are:

a. CIC - Container Imbalance Charges/Surcharges
b. EIC - Equipment Imbalance Charge/Surcharges
c. CAF - Container/Currency Adjustment Factor
d. BAF - Bunker adjustment Factor
e. RDS - Rupee Depreciation Surcharge
f. CDS - Currency Depreciation Surcharge
g. PCS - Port Congestion Surcharge
h. LSS - Low Sulphur Surcharge
i. Devanning Charges

11 **Transport Conditions for Import:**

The Original Documents (Bill of Lading, Invoice, Packing List, Certificate of Origin & Test Certificate) shall reach BHEL well in advance before the vessel arrival. The soft copies of the above shall be forwarded to BHEL immediately after shipment.

a) 14 FREE DAYS for Container detention at final port of destination shall be provided and the same to be endorsed in the Bill of Lading. If there is no free day or less than 14 free days provided by the supplier, the actual cost incurred towards detention charges due to non-availability of above said free days will be recovered from the supplier Invoice.
b) In the event of delayed submission of documents/ non-submission of documents by the supplier as per the mutually agreed terms, an amount up to 5% of the invoice value will be retained towards detention/ demurrage & other charges and the difference if any between actual charges and recovery will be settled separately through supplementary invoice.
c) In such cases, the Supplier shall authorize the Steamer / Shipping agent / transporter to freely release the consignment to BHEL by providing a "Surrender Bill of Lading".
d) Otherwise, No-objection Certificate shall be issued to the Liner, authorizing BHEL to get the Delivery Order without producing the Original Bill of Lading.
e) This is required to ensure avoidance of detention/ demurrage at Chennai Sea-port that may arise in case of delayed presentation of documents by the Seller.

12 **Acceptance of materials supplied:**

a) The supply shall strictly as per the specifications in the tender /purchase order.
b) Delivery of the ordered items as per the delivery terms in the Purchase Order does not automatically constitute acceptance of the delivered items.
c) The acceptance or otherwise of the delivered items will be separately communicated to the supplier by BHEL either through B2B portal or through e mail within 120 days' o from the delivery of items or delivery of the required test certificates /other documents whichever is later.
d) In case of rejection of the delivered items, either part or full, the vendor shall replace the rejected items as per the specification in the Purchase order/tender at their cost within specified days/months of communication of rejection to the supplier.
e) In case of rejection of the delivered items, either part or full, if the supplier fails to replace the rejected items within the specified days/months of communication of the rejection, the same shall be treated as failure to execute the contract and actions as per the Guidelines for Suspension of Business Dealings with Suppliers /Contractors available in the webpage: http://www.bhel.com/vender_registration/vender.php. would be taken against such supplier.

13	**Payment terms:** **Indigenous:** **BHEL Payment term is 100% direct EFT payment after 60 days from the date of receipt and acceptance of materials.** **Import:** **BHEL Payment term is 100% payment on CAD basis after 60 days from the date of receipt of documents, specified in PO, at BHEL bank. Respective bank charges to respective account.** If supplier insists for LC, only Usance LC with 60 days' credit will be opened one month prior to material readiness, further loading @ 1.5% on the offered value will be considered. Hence supplier shall intimate the material readiness accordingly along with MTC copies for opening of L.C. LC validity period will be 90 days and for any extension, applicable charges will be to supplier's account. **New Suppliers:** For new suppliers not registered with BHEL, Trichy for the product, Payment shall be made 60 days after receipt and acceptance of materials. In case of foreign supplier, first lot of mutually agreed quantity shall be supplied with payment as CAD basis after 60 days from the date of receipt & acceptance of material. If insisted for LC, after acceptance of first lot, only Usance LC with 60 days' credit will be opened one month prior to material readiness.	
14	**Liquidated Damage (Indigenous & Imports):** 1. Time is the essence of the contract. 2. The ordered items shall be delivered as per the delivery period mentioned in the Purchase Order. 3. In case the supplier supplies the ordered items beyond the delivery period specified, Liquidated Damages -LD - as detailed below shall be will be levied from the supplier without prejudice to any other relief /compensation available to BHEL, Tiruchirappalli under any other condition of the contract/applicable legal provisions. 4. **LD shall be 0.5% of the undelivered portion per week or part thereof subject to a maximum of 10% of the total order value**. 5. Any deviation from the above LD clause, loading will be applied to the extent to which it is not agreed by the bidder (at offered value). 6. Indigenous: For "FOR Delivery terms", Lorry way bill date will be taken for LD calculation. Import: For CFR terms, BL date will be considered for LD calculation.	
15	**Risk Purchase clause:** a) In the event of any successful Tenderer's failure to fulfil any of the tender / Contract obligations including supply of whole or any part of the ordered items as per Contract / Agreement, BHEL has the right to terminate the contract and purchase from elsewhere ,at the risk and cost of the defaulted supplier, either the whole of the goods or any part which the supplier has failed to deliver or dispatch within the time stipulated in the contract or if the same were not available, the best and nearest available substitute thereof. The supplier shall be liable for the additional expenditure/difference in Cost, if any, including consequential losses which BHEL may sustain by reason of risk purchase in addition to the applicable LD as per the Purchase order/contract. b) The decision of BHEL with regard to the additional expenditure / difference in cost and consequential losses incurred by BHEL shall be final and binding on the supplier. c) The amount recoverable under risk purchase shall be recovered from the defaulted supplier in all or any of the following manners: i) from dues available in the form of Bills payable to defaulted supplier, SD, BGs against the same contract. ii) from the dues payable to defaulted supplier against other contracts in the same Region/Unit /any other region/unit iii) In-case recoveries are not possible with any of the above available options, Legal action shall be initiated for recovery against defaulted supplier.	
16	**Warrantee / Guarantee:** Supplier to accept guarantee/warrantee of "18 months from the date of dispatch or 12 months from the date of commissioning, whichever is earlier". Supplier shall replace defective material free of cost (inclusive of all Testing, Inspection, TPI, Service charges etc.) up to destination within two months from defect notification date.	

17	**Non-Disclosure Agreement(NDA):** The bidders shall enter into the Non-disclosure agreement totally voluntarily, with full knowledge of its meaning and without duress. (Format attached).	
18	**Patent Right** The supplier shall, at all times, indemnify and keep indemnified the purchaser, free of cost, against all claims which may arise in respect of goods & services to be provided by the supplier under the contract for infringement of any intellectual property rights or any other right protected by patent, registration of designs or trademarks. In the event of any such claim in respect of alleged breach of patent, registered designs, trademarks etc. being made against the purchaser, the purchaser shall notify the supplier of the same and the supplier shall, at his own expenses take care of the same for settlement without any liability to the purchaser.	
19	**PARTICULARS TO BE FURNISHED BY FOREIGN VENDORS FOR EVALUATION OF BIDS WITH CUSTOMS DUTY BENEFIT**	**VENDOR COMMENTS**
	A. Whether PTA/ CEPA or any other agreement/treaty between respective Governments/Countries exists and the same is applicable for your supplies w.r.t this Enquired Items/tender.	YES / NO
	B. If yes, mention the Concessional Customs Duty (Such Duty Benefits)	%
	C. Documentary proof for the applicable Concessional Customs Duty (eg. PTA/ CEPA or other agreement) shall be submitted along with the Part-1 bid.	SUBMITTED/ NOT SUBMITTED
	D. Relevant documents and details to avail the above concessional duty benefits by BHEL shall be submitted by the supplier along with dispatch documents	CONFIRMED/ NOT CONFIRMED
	E. In the event of seller failing to provide appropriate documents along with dispatch documents for purchasers to avail disclosed concessional duty benefits in India, financial loss, so incurred, will be to the seller's account.	CONFIRMED/ NOT CONFIRMED
	Note: Evaluation of the Price bids will be based on the above details only and unless mentioned/furnished by the vendor, Customs Duty benefit will not be applied for evaluation purposes.	
20	**Role of Agents** a. BHEL strongly discourages the engagement of Agents by foreign principals, to deal with BHEL, in BHEL's tenders. b. In case of foreign suppliers representing through their Indian/foreign agents, agency agreement should be submitted, else offer is liable for rejection. Agency agreement requirements attached as separate file and full compliance to it shall be ensured while submitting the same. c. BHEL, due to business reasons would ban, would have banned Indian agents from dealing with BHEL. Any foreign principal who engages such a banned agent, or an employee of the banned agency, or any other person connected with the banned agency, at any time during the tender proceedings, would be disqualified from the tender proceedings. The decision of BHEL in this regard shall be final and be binding on the OEM. Hence in their own interests, prospective tenderers may check with BHEL. The list of banned firms is available on BHEL website www.bhel.com. Vendors/ principals proposing to deal with BHEL by engaging and through an Indian Agent does so at their own risk. BHEL shall in no way be responsible for any consequences that may arise to the foreign principal on account of the antecedents / actions of their Indian agent.	
21	**Agency Commission:** a) If overseas principal has any tie-up with any third party/ agents, it should be declared while submitting offers. b) In respect of offers from overseas suppliers, agency commission, if any, payable to their agents in India, shall invariably be shown separately in the Performa invoice and this will be paid by BHEL in India, in Indian rupees, on satisfactory completion of the contract. c) Copies of current agency agreement / authorization letter in respect of agency commission shall be furnished along with offer. d) For calculation of rupee equivalent agency commission, exchange rate as prevailing on the date of order will be taken.	
22	**Evaluation Criteria:** The Evaluation Currency for this tender shall be "INR". The offers of vendors will be evaluated on total landed cost to BHEL, Trichy. The evaluation process is as detailed below: **Indigenous:** **Total Landed cost = FOR Rate in INR (A) + Applicable Taxes (B) + Loading for payment term & LD (C) – Applicable input tax credit (D)**	

A. Indigenous vendors submit offers on Free on Road (FOR), Trichy in INR.
B. GST and any other charges quoted by indigenous vendors will be added to the base price.
C. Loading for payment terms & non-acceptance of Liquidated Damages (LD) will be added to the FOR value for arriving the landed rate.
D. However, input credit is availed for GST (SGST, CGST/IGST), hence the same is excluded for arriving at the landed cost.

Import:

Total Landed cost = CFR Rate in INR (A) + Applicable Duties (B) + Incidental Charges (C) + Loading for payment term & LD (D)

A. Import vendors to submit offers on CFR (Cost & Freight), Chennai port (LILO – Liner In Liner Out) basis in foreign currency, which will be converted to INR by multiplying with the Exchange rate (SBI TT Selling rate) as on the technical bid opening date.
B. Customs duty, Safe guard duty and antidumping duty as applicable will be added to the INR price.
C. Incidental charges of 2.805% will be added to the CFR Value. The incidental charge is inclusive of Insurance, port handling charges, & freight charges for movement from Chennai port to BHEL, Trichy.
D. Loading for payment terms & Non-acceptance of Liquidated Damages (LD) will be added to the CFR value for arriving at the landed cost.

Note: "In the course of evaluation, if more than one bidder happens to occupy L1 status, effective L1 will be decided by soliciting discounts from the respective L1 bidders. In case more than one bidder happens to occupy the L1 status even after soliciting discounts, the L1 bidder shall be decided by a toss/draw of lots, in the presence of the respective L1 bidders or their representatives. Ranking will be done accordingly. BHEL decision in such situations shall be final and binding".

23 **General condition:**

a) Bids including all enclosures and supporting documents like catalogues, pamphlets, etc., shall be submitted / uploaded in ENGLISH language only. If the documents submitted have other than English language, translation of the same shall be provided for evaluation.

b) In addition to TCs in relevant IBR forms corresponding mill TCs should also be provided along with dispatch of Gr.91 Formed Fittings. Two sets of original of all such TCs are to be provided to BHEL, Trichy.

c) Material is to be inspected by third party inspection agency as approved by IBR and test certificate are to be countersigned by respective Inspection agency in case the Mill is not approved by IBR.

d) We require the shipment of the Gr.91 Formed Fittings to be as per the dates mentioned against the individual items in the enquiry.

e) Multiple PO may also be placed considering the applicable duty structure of the respective requirement/Qty.

f) No revision of prices will be entertained after the tenders are opened.

g) For the evaluation purposes, exchange rate (TT selling rate of SBI) as on schedule date of tender opening (Part I, i.e technical bid, in case of two part bid) shall be considered.

h) BHEL will consider the ranking after the loading is applied wherever deviations are observed.

i) BHEL reserves the right to negotiate L1 rate or re-float the tender opened if L1 price is not the lowest acceptable price to them inter-alia other reasons.

j) In the event of our customer order covering this tender being cancelled / placed on hold / otherwise modified, BHEL would be constrained to accordingly cancel / hold / modify the tender / your purchase order at any stage of execution.

k) Offer will be evaluated based on Landed cost to BHEL- Trichy on individual line item basis only.

l) Vendor should physically weigh the materials before stuffing them into container and incorporate the same in BL and packing slip

m) Offers for partial quantities of a given item are not acceptable to BHEL. While tenderers can quote for some or all the tendered items, no supplier shall quote for partial quantity of any given enquiry item. Such partial offer would not be considered in the enquiry for that item.

	n) No payment will be made for the excess quantity. o) Offer should be submitted only as per the Unit of Measurement (UOM) specified in the enquiry. p) The offers of the bidders who are on the banned list as also the offer of bidders who engage the services of the banned firms, shall be rejected. The list of banned firms is available on the BHEL website - www.bhel.com. q) Documents not signed and stamped by the authorized signatory of the bidder shall not be accepted and considered for registration / evaluation of the bid etc. r) Any additional documents submitted by supplier / bidder, during processing of registration application / tender or after placement of order, shall not be accepted unless it is submitted with forwarding letter and duly signed and stamped as mentioned above. s) All documents submitted with the offer shall be signed and stamped in each page by authorized representative of the bidder. t) This Tender is hosted in EPS portal & offer to be submitted through EPS portal only. You are requested to submit your 2 parts offer before due date & time of the enquiry through **NIC** (https://eprocurebhel.co.in) only. SEALED COVER BIDS / E-MAILS / FAX / MANUAL OFFERS WILL NOT BE ACCEPTED. For any clarification you can contact to *rmega@bhel.in*, thambi@bhel.in Contact nos. **04312575458 / 04312577492**	
24	**Fraud Prevention Policy** "The bidder along with its associate/collaborators/sub-contractors /consultants/service providers shall strictly adhere to BHEL Fraud prevention policy displayed on BHEL website htpp://www.bhel.com and shall immediately bring to the notice of BHEL Management about fraud or suspected fraud as soon as it comes to their notice."	
25	**Suspension of Business Dealings with Suppliers/Contractors:** The offers of the bidders who are under suspension as also the offers of the bidders, who engage the services of the banned firms /principal/agents, shall be rejected. The list of banned firms is available on BHEL web site www.bhel.com. **Integrity commitment, performance of the contract and punitive action thereof:** **Commitment by BHEL** BHEL commits to take all measures necessary to prevent corruption in connection with the tender process and execution of the contract. BHEL will during the tender process treat all Bidder(s) in a transparent and fair manner, and with equity. **Commitment by Bidder/ Supplier/ Contractor** • The bidder/ supplier/ contractor commit to take all measures to prevent corruption and will not directly or indirectly influence any decision or benefit which he is not legally entitled to nor will act or omit in any manner which tantamount to an offence punishable under any provision of the Indian Penal Code, 1860 or any other law in force in India. • The bidder/ supplier/ contractor will, when presenting his bid, disclose any and all payments he has made, and is committed to or intends to make to agents, brokers or any other intermediaries in connection with the award of the contract and shall adhere to relevant guidelines issued from time to time by Govt. of India/ BHEL. • The bidder/ supplier/ contractor will perform/ execute the contract as per the contract terms & conditions and will not default without any reasonable cause, which causes loss of business/ money/ reputation, to BHEL. If any bidder/ supplier/ contractor during pre-tendering/ tendering/ post tendering/ award/ execution/ post-execution stage indulges in any act, including but not limited to, mal-practices, cheating, bribery, fraud or and other misconduct or formation of cartel so as to influence the bidding process or influence the price or tampers the tendering process or acts or omits in any manner which tantamount to an offence punishable under any provision of the Indian Penal Code, 1860 or any other law in force in India, then, action may be taken against such bidder/ supplier/ contractor as per extant guidelines of the company available on www. bhel.com and/or under applicable legal provisions. Guidelines for suspension of business dealings_is available in the webpage: http://www.bhel.com/vender_registration/vender.php.	
26	**Cartel Formation:** The Bidder declares that they will not enter into any illegal or undisclosed agreement or understanding, whether formal or informal with other Bidder(s). This applies in particular to prices, specifications, certifications, subsidiary contracts, submission or non-submission of bids or any other actions to restrict competitiveness or to introduce cartelization in the bidding process. In case, the Bidder is found having indulged in above activities, suitable action shall be taken by BHEL as per extant policies/ guidelines.	

27 **Integrity Pact (IP):**

(a) IP is a tool to ensure that activities and transactions between the Company and its Bidders/ Contractors are handled in a fair, transparent and corruption free manner. Following Independent External Monitors (IEMs) on the present panel have been appointed by BHEL with the approval of CVC to oversee implementation of IP in BHEL.

IEM	Email
Shri Arun Chandra Verma, IPS (Retd.)	acverma1@gmail.com
Shri Virendra Bahadur Singh, IPS (Retd.)	vbsinghips@gmail.com

(b) The IP as enclosed with the tender is to be submitted (duly signed by authorized signatory) along with techno-commercial bid (Part-I, in case of two/ three part bid). Only those bidders who have entered into such an IP with BHEL would be competent to participate in the bidding. In other words, entering into this Pact would be a preliminary qualification.

(c) Please refer Section-8 of IP for Role and Responsibilities of IEMs. In case of any complaint arising out of the tendering process, the matter may be referred to any of the above IEM(s). All correspondence with the IEMs shall be done through email only.

Note: No routine correspondence shall be addressed to the IEM (phone/ post/ email) regarding the clarifications, time extensions or any other administrative queries, etc on the tender issued. All such clarification/ issues shall be addressed directly to the tender issuing (procurement) department's officials whose contact details are provided below: Details of contact person(s):

Name: R. Meganathan / DM
Dept: MM/Purchase/C&F
Address: 4th Floor, 24 Building
HPBP, BHEL, Trichy- 620014
Email: rmega @ bhel.in
Phone: 0431-257-5458

Name: M. Thambidurai / DE
Dept: MM/Purchase/C&F
Address: 4th Floor, 24 Building
HPBP, BHEL, Trichy-620014
Email: thambi@bhel.in
Phone: 0431-257-7492

28 **Resolution of Disputes:**

The Parties agree that if at any time (whether before, during or after the arbitral or judicial proceedings), any Disputes (which term shall mean and include any dispute, difference, question or disagreement arising in connection with construction, meaning, operation, effect, interpretation or breach of the contract/tender which the Parties are unable to settle mutually), arise inter-se the Parties, the same may, be referred by either party to Conciliation to be conducted through Independent Experts Committee to be appointed by competent authority of BHEL from the BHEL Panel of Conciliators.

The proceedings of Conciliation shall broadly be governed by Part-III of the Arbitration and Conciliation Act 1996 or any statutory modification thereof.

Notes:

1. No serving or a retired employee of BHEL/Administrative Ministry of BHEL shall be included in the BHEL Panel of Conciliators.
2. Any other person(s) can be appointed as Conciliator(s) who is/are mutually agreeable to both the parties from outside the BHEL Panel of Conciliators.

The proceedings of Conciliation shall broadly be governed by Part-III of the Arbitration and Conciliation Act 1996 or any statutory modification thereof and as provided in Annexure X to this Enquiry Conditions.

The Annexure together with its appendices will be treated as if the same is part and parcel hereof and shall be as effectual as if set out herein in these Enquiry Conditions.

Except as provided elsewhere in this Contract, in case amicable settlement is not reached between the parties, in respect of any dispute or difference; arising out of the formation, breach, termination, validity or execution of the Contract; or, the respective rights and liabilities of the Parties; or, in relation to interpretation of any provision of the Contract ; or , in any manner touching upon the Contract, then, either Party may , by a notice in writing to other Party refer such dispute or difference to sole arbitration of an arbitrator appointed as per the Arbitration and Conciliation Act, 1996 (India) or statutory modification or re-enactment thereof and the rules made thereunder and for the time being in force .

The Arbitrator shall pass a reasoned award and the award of the Arbitrator shall be final and binding upon the parties. Subject as aforesaid, the provision of Arbitration & Conciliation Act 1996 (India) or statutory modification or re-enactment thereof and the rules made thereunder and for the time being in force shall apply to the arbitration proceeding under this clause.

The seat of arbitration shall be Trichy, Tamil Nadu, India. The cost of arbitration shall be borne as per the award of the Arbitrator. Subject to arbitration in terms of clause above, the Courts at Trichy, Tamil Nadu, India shall have exclusive jurisdiction over any matter arising out of or in connection with this Contract.

	Notwithstanding the existence or any dispute or difference and/or reference for the arbitration, the vendor shall proceed with and continue without hindrance the performance of its obligation under this Contract with due diligence and expedition in a professional manner except where the Contract has been terminated by either Party in terms of this Contract. **<u>In Case of Contract with Public Sector Enterprise (PSE) or a Government Department, the following shall be applicable:</u>** In the event of any dispute or difference relating to the interpretation and application of the provisions of commercial contract(s) between Central Public Sector Enterprises (CPSEs)/Port Trusts *inter se* and also between CPSEs and Government Departments/Organizations (Excluding disputes concerning Railways, Income Tax, Customs & Excise Departments, such dispute or difference shall be taken up by either party for resolution through AMRCD as mentioned in DPE OM No. 4(1)/2013 –DPE (GM)/FTS-1835 dated 22-05-2018.	
29	**<u>In the event of Force Majeure:</u>** a. Notwithstanding the provisions contained in other clauses, the supplier shall not be liable for imposition of any such sanction so long the delay and/or failure of the supplier in fulfilling its obligations under the contract is the result of an event of Force Majeure. For purposes of this clause, Force Majeure means an event beyond the control of the supplier and not involving the supplier's fault or negligence and which is not foreseeable and not brought about at the instance of the party claiming to be affected by such event and which has caused the non – performance or delay in performance. Such events may include, but are not restricted to, wars or revolutions, hostility, acts of public enemy, civil commotion, sabotage, fires, floods, explosions, epidemics, quarantine restrictions, strikes excluding by its employees, lockouts excluding by its management, freight embargoes and Acts of GOD. b. If a Force Majeure situation arises, the supplier shall promptly notify the Purchaser/Consignee in writing of such conditions and the cause thereof within twenty-one days of occurrence of such event. Unless otherwise directed by the Purchaser/Consignee in writing, the supplier shall continue to perform its obligations under the contract as far as reasonably practical, and shall seek all reasonable alternative means for performance not prevented by the Force Majeure event. c. If the performance in whole or in part or any obligation under this contract is prevented or delayed by any reason of Force Majeure for a period exceeding sixty days, either party may at its option terminate the contract without any financial repercussion on either side. d. In case due to a Force Majeure event the Purchaser/Consignee is unable to fulfil its contractual commitment and responsibility, the Purchaser/Consignee will notify the supplier accordingly and subsequent actions taken on similar lines described in above sub-paragraphs.	
30	**<u>Execution of the order:</u>** a. BHEL will have the option to pre-inspect the materials at Supplier's works by BHEL's own inspector or by third party agency appointed by BHEL or BHEL"s end customer/s. b. If the inspection fails, the vendor shall offer the material again as per ordered terms and specifications for further inspection. c. The mere act of the pre-dispatch inspection (PDI) does not absolve the Supplier from giving the specifications as agreed upon in the Purchase Order. d. In the case of overseas suppliers Inspection call for carrying out the inspection shall be given 30 days before the scheduled contract delivery date. The Inspection date/s given by the Supplier shall be on firm basis. For local Suppliers the Notice period of Inspection shall be 10 working days. **e.** In the event of any short supply, it shall be the responsibility of the supplier to deliver such short supplied/ missing items on Free-of-Cost basis at BHEL stores, including customs clearances at Indian Ports in the case of foreign suppliers.	
31	**<u>Set-off Clause</u>**: BHEL shall have the right to recover any money which in the sole opinion of BHEL is due from the Contractor from any money due to the Contractor under this Contract or any other contract or from the Security Deposit furnished by the Contractor under this Contract or any other contract.	
32	**<u>Caution:</u>** a) The suppliers are severely cautioned to note that the price bid document accepts the price in figures only. It does not allow the supplier to write the value by words. Therefore, all care shall be exercised by the supplier while filling in the figures. Once the price bid is opened no option is available for the supplier to retract the offer under any grounds. If a supplier, for any reason whatsoever approaches BHEL with a request for change in the price, it would be treated as going back on the offer submitted. In such cases, action would be initiated by BHEL for suspending further business dealings with such suppliers as per policy of BHEL which prevails at that point of time. b) The language in the tender documents downloaded by the Bidders shall at no point of time be changed, altered or modified in any manner by the Tenderer. If such changes are made by any tenderer, it shall be considered as tampering with BHEL's terms and the offer shall be summarily rejected, whenever it is noticed by BHEL. Such Bidders would be disqualified from the Bidding Process and their offers would be forfeited / Bank Guarantees invoked. They would also not be allowed to participate in future tenders of BHEL.	

33	**Special Provisions for Micro and Small Enterprises (MSE) bidders registered as per MSME act:** (Subject to participating MSE vendors meeting the tender requirements of BHEL) a) As per Gazette Notification no. S.O. 2119(E) dated 26.06.2020 issued by Ministry of MSME applicable/existing Micro and small suppliers are requested to get registered with Udyam Registration portal and share us the Udyam registration no along with Udyam registration certificate. MSE suppliers can avail the intended benefits only if they submit Udyam registration certificate along with the offer. b) 25% of the tendered quantity is earmarked for MSE suppliers in this tender, subject to participating MSE Vendors should meet the tender requirements of BHEL. In case MSE vendor participating in the tender quotes within the price band of L1 + 15%, they will be allowed to supply the portion of the requirement subject to acceptance of L1 price by MSE vendor. In case of more than one such MSE vendor within the "L1+15% price band", the supply shall be shared proportionately. c) In the event of Non MSE supplier becoming L1 and MSE supplier quotes within the price band of L1+15% and it is not possible to split the tendered quantity on account of reasons like customer contract requirement/technical requirements, then 100% of the quantity will be offered to MSE suppliers subject to acceptance of L1 price by MSE supplier. d) Counter offering of L1 rate will not be made with any MSE vendor whose quoted rate is more than the price band of L1+15%. e) Payment to MSE vendor will be as per the applicable provisions of the MSMED Act 2006. f) If L1 offer is from a Micro / Small enterprise, the 25% earmarking provision is not applicable. g) Out of the 25% tendered quantity reserved for MSE suppliers, 6.25% shall be earmarked for procurement from MSE owned by SC/ST entrepreneurs. Apart from this 3% shall be earmarked for procurement from MSE owned by Women entrepreneurs. h) In case of any change in the MSE status of the bidder, it shall be the responsibility of the bidder to notify the change as a part of the bid document. If at a later date it comes to the knowledge of BHEL, that the change in the status has not been intimated by the bidder and the order is obtained under the premise of an MSE then BHEL would cancel the pending order against this tender and take necessary steps for suspension of the business dealing with the bidder as per the procurement policy of BHEL. i) Non submission of Udyam registration certificate will lead to consideration of their bid at par with other bidders. No benefit shall be applicable for this enquiry if any deficiency in the above required documents are not submitted before price bid opening. However, credentials of all MSE suppliers will be verified before considering the intended benefits for MSE suppliers at the time of tender evaluation. Non submission of Udyam registration certificate will lead to consideration of their bids at par with other bidders and MSE status of such suppliers shall be shifted to Non MSE supplier.	
34	**Preference to Make in India:** For this procurement, the local content to categorize a supplier as a class I local supplier/class II local supplier /Non-local supplier and purchase preference to class I local supplier, is as defined in Public Procurement (Preference to Make in India), Order 2017 dated 04.06.2020 issued by DPIIT. In case of subsequent Orders issued by the respective Nodal Ministry, changing the definition of local content for the items of the NIT, the same shall be applicable even if issued after issue of this NIT, but before opening of part II bids against this NIT.	
35	**Restrictions for Procurement from a country sharing its land border with India** For this procurement, Public procurement order dated 23.07.2020 regarding restrictions under rule 144 (xi) of general financial rules 2017 and clarification dt 08.02.2021 from DoE is applicable. In case of subsequent Orders issued, the same shall be applicable even if issued after issue of this NIT.	
36	**Enclosures:** **a)** Enquiry **b)** TDC 423/09 **c)** Inspection Authorities list d) NDA Format e) IBR Amendment f) Drawings	

M THAMBIDURAI Digitally signed by M THAMBIDURAI Date: 2021.07.02 10:40:55 +05'30' (On behalf of BHEL)	**SIGNED BY MANUFACTURER / MILL** Name of Mill: Designation / Department: Seal & Signature

Annexure C

VENDOR DETAILS

SL NO	DESCRIPTION	To be filled by bidder
1	VENDOR NAME	
2	QUOTATION REFERENCE	
3	QUOTATION DATE	
4	TELE, MOBILE NO	
5	FIRM MAIL ID	
6	CONTACT PERSON	
7	OFFICE ADDRESS	
8	ORDER TO BE PLACED ON	
9	COUNTRY OF ORIGIN	
10	PORT OF LOADING	
11	PORT OF DISCHARGE	

Vendor Seal & Sign

DRAWING NO: 3-10-000-08724

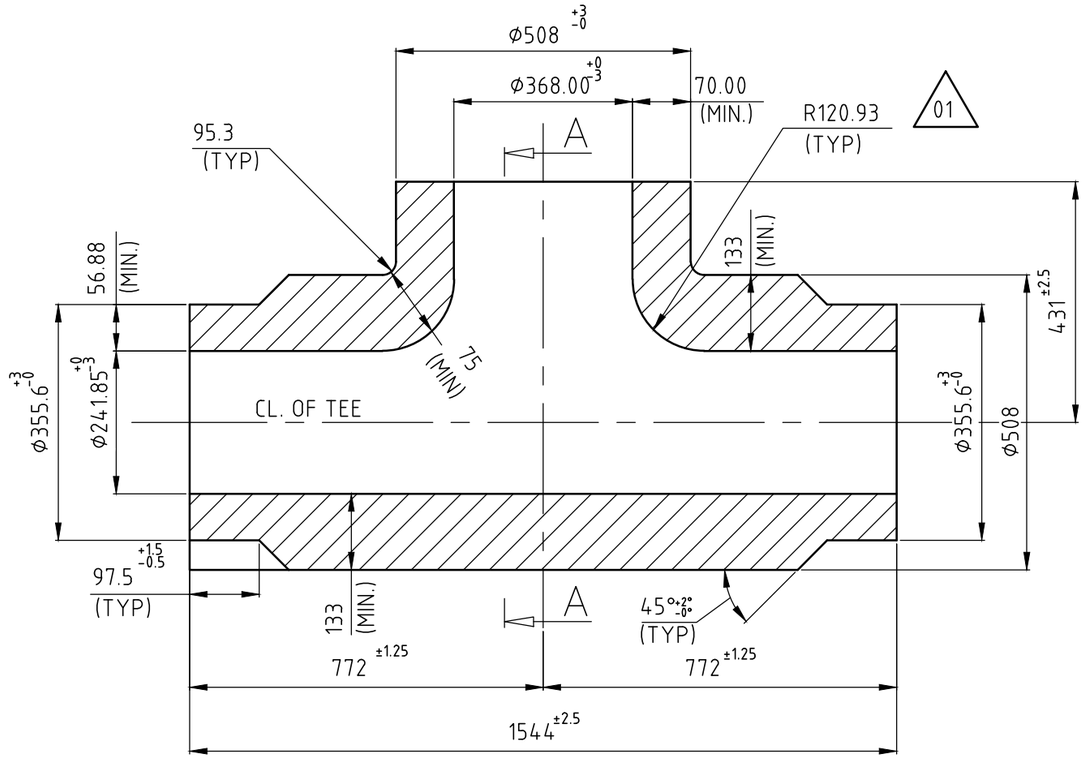

NOTES:

1. DESIGN, MANUFACTURE AND INSPECTION AS PER IBR.
2. FOR TOLERANCES REFER 4-03-000-00053.
3. ALL DIMENSIONS SHOWN ARE FINISHED DIMENSIONS.
4. NORMALIZING AND TEMPERING IS TO BE DONE AFTER HOT FORMING.
5. NO THICKNESS GREATER THAN 152.4mm SHALL BE USED WITHOUT PRIOR APPROVAL FROM BHEL.
6. FITTING SPECIFICATION: SA234WP91
7. THE FORMED TEE SHALL BE SUPPLIED WITH PLAIN ENDS.

FITTING MATERIAL CODE: 921051720000

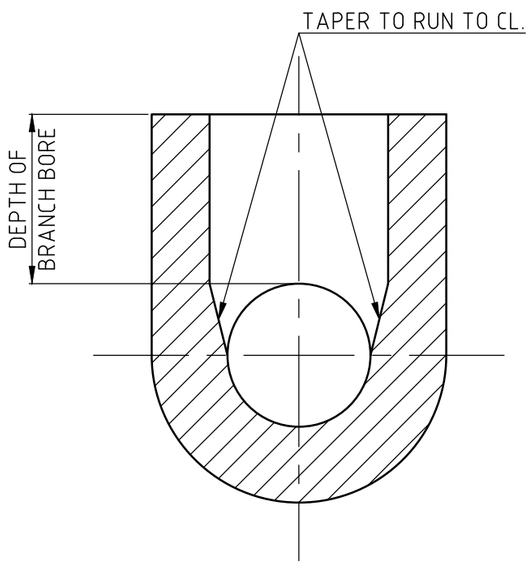

SECTION–AA

VARIANT NUMBER	ITEM NUMBER	DESCRIPTION	STD	DRAWING NUMBER	ITEM NO	MATERIAL CODE	A/C/P	UNIT	UNIT WEIGHT	GS
							A		1,823.000	
						SA234WP91				
					VAR NO	MATERIAL SPECN		DI	QUANTITY	

REV	DATE	ALTERED : EK
01	20/11/19	CHD & APPD: YADAV
ZONE	INNER RADIUS SHOWN.	

CAUTION: The information on this document is the property of BHARAT HEAVY ELECTRICALS LTD. It must not be used directly or indirectly in any way detrimental to the interest of the company.

TYPE OF PRODUCT OR NAME OF CUSTOMER/PROJECT

355–055

Bharat Heavy Electricals Ltd
UNIT: HIGH PRESSURE BOILER PLANT
TIRUCHIRAPALLI – 620014

	NAME	SIGNATURE	DATE
DRN	ANEET DIXIT		10-06-2018
CHD	ANEET DIXIT		10-06-2018
APPD	SAK		10-06-2018

DEPT	CODE	ALL DIMENSIONS ARE IN MM	PROJECTION	SCALE	WEIGHT (Kg)	REF TO ASSY / OLD DWG
PP	121			N.T.S	1,823.000	

TITLE UNEQUAL TEE
Ø508X80(NOM.)/ Ø355.6X65(NOM.)

DRAWING NO : 3–10–000–08724 REV 01

DRAWING NO: 3-10-000-08725

FOR TOLERANCES OF UNTOLERANCED DIMENSIONS DURING MANUFACTURE REFER PLANT STD.NO TP 023 0299

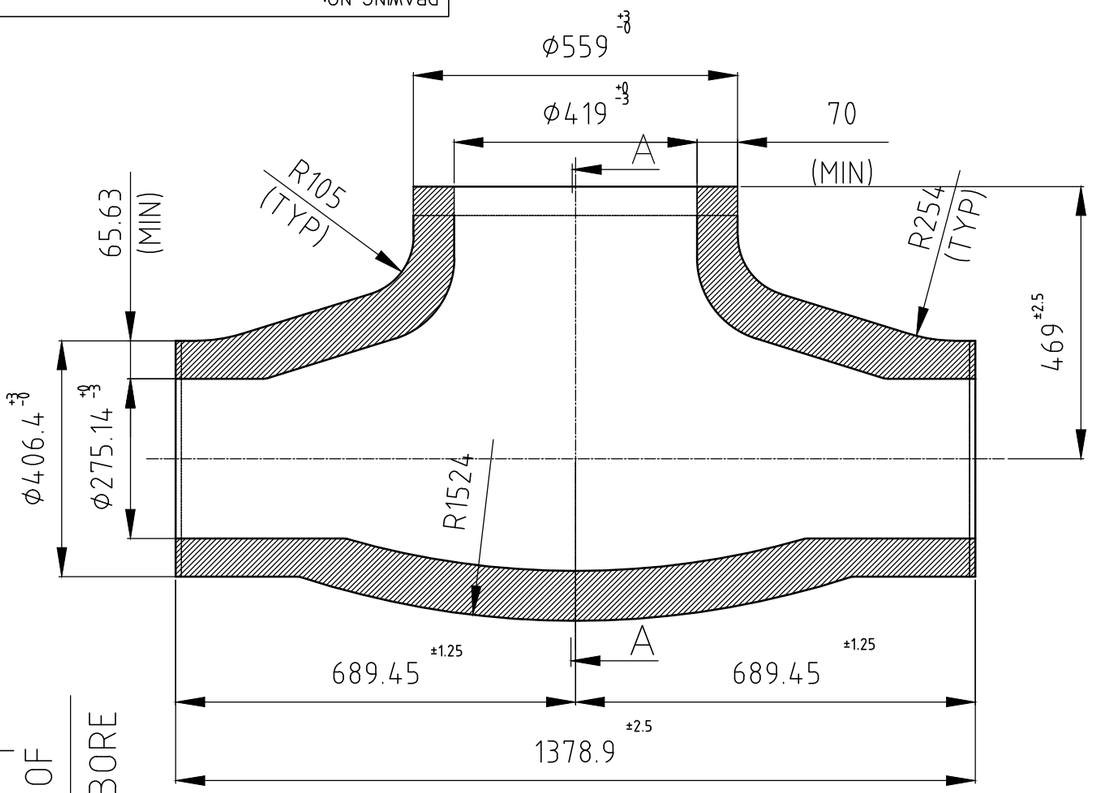

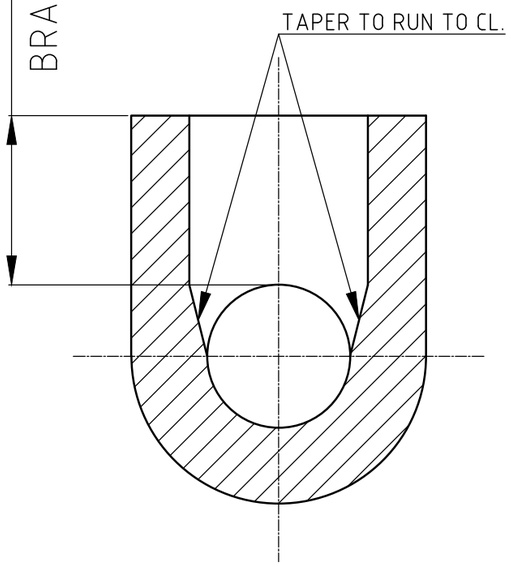

SECTION–AA

NOTES:

1. DESIGN, MANUFACTURE AND INSPECTION AS PER IBR.
2. FOR TOLERANCES REFER 4-03-000-00053.
3. ALL DIMENSIONS SHOWN ARE FINISHED DIMENSIONS.
4. NORMALIZING AND TEMPERING IS TO BE DONE AFTER HOT FORMING.
5. NO THICKNESS GREATER THAN 152.4mm SHALL BE USED WITHOUT PRIOR APPROVAL FROM BHEL.
6. FITTING SPECIFICATION: SA234WP91
7. THE FORMED TEE SHALL BE SUPPLIED WITH PLAIN ENDS.

FITTING MATERIAL CODE: 921051730000

VARIANT NUMBER	ITEM NUMBER	DESCRIPTION	STD	DRAWING NUMBER	ITEM NO	MATERIAL CODE	A/C/P	UNIT	UNIT WEIGHT	GS
							A		1048.000	
						SA234WP91				
					VAR NO	MATERIAL SPECN		DI	QUANTITY	

CAUTION: The information on this document is the property of BHARAT HEAVY ELECTRICALS LTD. It must not be used directly or indirectly in any way detrimental to the interest of the company.

TYPE OF PRODUCT OR NAME OF CUSTOMER/PROJECT

Bharat Heavy Electricals Ltd
UNIT: HIGH PRESSURE BOILER PLANT
TIRUCHIRAPALLI – 620014
355–055

	NAME	SIGNATURE	DATE
DRN	ANEET DIXIT		10-06-2018
CHD	ANEET DIXIT		10-06-2018
APPD	SAK		10-06-2018

REV	DATE	ALTERED :
01		CHD & APPD:
ZONE		

DEPT PP | CODE 121 | ALL DIMENSIONS ARE IN MM | PROJECTION | SCALE N.T.S | WEIGHT (Kg) 1048.000 | REF TO ASSY / OLD DWG

TITLE UNEQUAL TEE
ϕ559X80(NOM.)/ ϕ406.4X75(NOM.)

DRAWING NO : 3–10–000–08725 REV 00

DRAWING NO: 3-10-000-08726

FOR TOLERANCES OF UNTOLERANCED DIMENSIONS DURING MANUFACTURE REFER PLANT STD.NO TP 023 0299

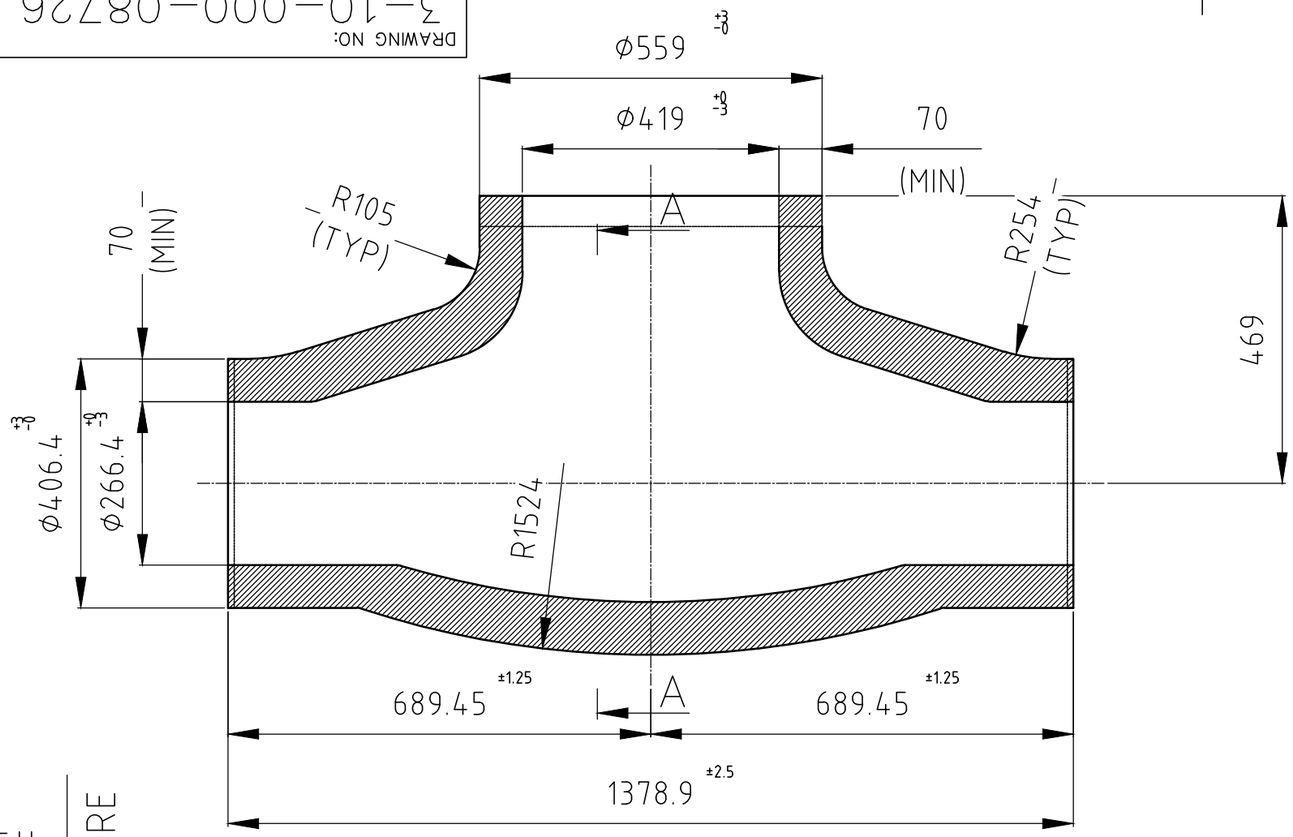

NOTES:

1. DESIGN, MANUFACTURE AND INSPECTION AS PER IBR.
2. FOR TOLERANCES REFER 4-03-000-00053.
3. ALL DIMENSIONS SHOWN ARE FINISHED DIMENSIONS.
4. NORMALIZING AND TEMPERING IS TO BE DONE AFTER HOT FORMING.
5. NO THICKNESS GREATER THAN 152.4mm SHALL BE USED WITHOUT PRIOR APPROVAL FROM BHEL.
6. FITTING SPECIFICATION: SA234WP91
7. THE FORMED TEE SHALL BE SUPPLIED WITH PLAIN ENDS.

FITTING MATERIAL CODE: 921051740000

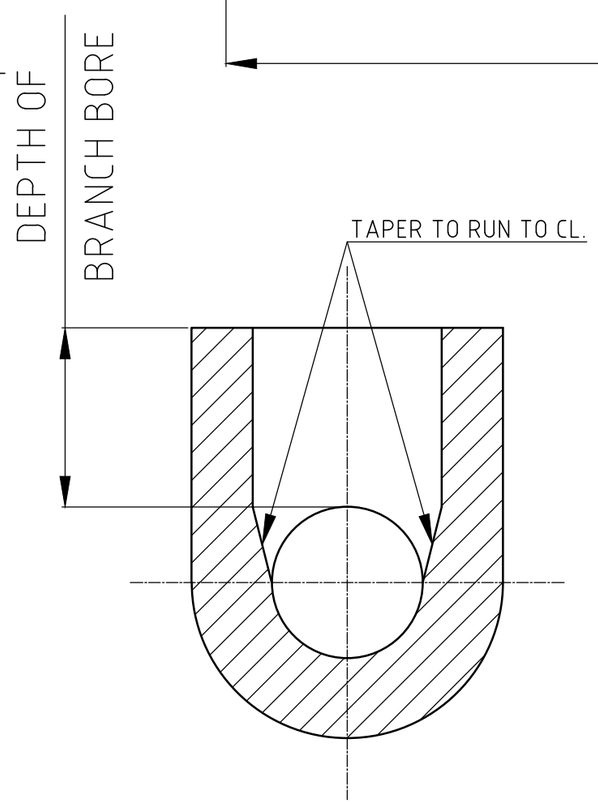

SECTION–AA

VARIANT NUMBER	ITEM NUMBER	DESCRIPTION	STD	DRAWING NUMBER	ITEM NO	MATERIAL CODE	A/C/P	UNIT	UNIT WEIGHT	GS
							A		1061.000	
					VAR NO	MATERIAL SPECN		DI	QUANTITY	
						SA234WP91				

REV	DATE	ALTERED : ANEET DIXIT
01	11.06.18	CHD & APPD: SAK
ZONE	PROFILE UPDATED.	

CAUTION: The information on this document is the property of BHARAT HEAVY ELECTRICALS LTD. It must not be used directly or indirectly in any way detrimental to the interest of the company.

TYPE OF PRODUCT OR NAME OF CUSTOMER/PROJECT

355-055

Bharat Heavy Electricals Ltd
UNIT: HIGH PRESSURE BOILER PLANT
TIRUCHIRAPALLI – 620014

	NAME	SIGNATURE	DATE
DRN	ANEET DIXIT		10-06-2018
CHD	ANEET DIXIT		10-06-2018
APPD	SAK		10-06-2018

DEPT	PP	ALL DIMENSIONS ARE IN MM	PROJECTION	SCALE	WEIGHT (Kg)	REF TO ASSY / OLD DWG
CODE	121			N.T.S	1061.000	

TITLE UNEQUAL TEE
Ø559X80(NOM.)/ Ø406.4X80(NOM.)

DRAWING NO : 3–10–000–08726 REV 01

DRAWING NO: 3-10-000-09010

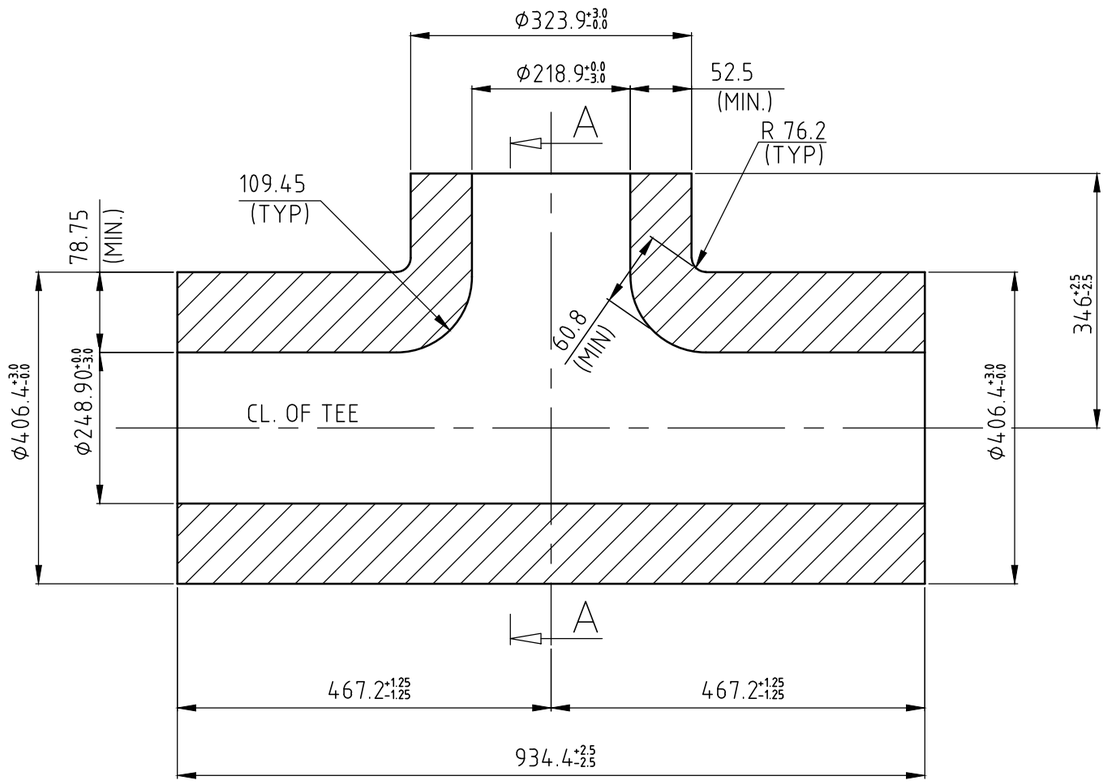

NOTES:

1. DESIGN, MANUFACTURE AND INSPECTION AS PER IBR.
2. FOR TOLERANCES REFER 4-03-000-00053.
3. ALL DIMENSIONS SHOWN ARE FINISHED DIMENSIONS.
4. NORMALIZING AND TEMPERING IS TO BE DONE AFTER HOT FORMING.
5. NO THICKNESS GREATER THAN 152.4mm SHALL BE USED WITHOUT PRIOR APPROVAL FROM BHEL.
6. FITTING SPECIFICATION: SA234WP91
7. THE FORMED TEE SHALL BE SUPPLIED WITH PLAIN ENDS.

FITTING MATERIAL CODE: 921052030000

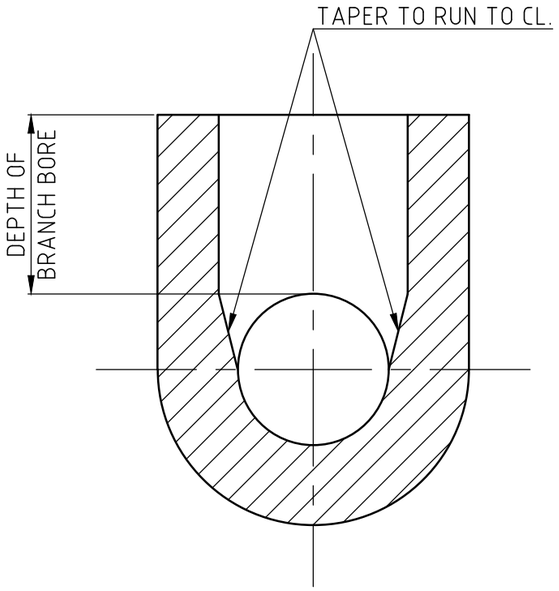

SECTION-AA

VARIANT NUMBER	ITEM NUMBER	DESCRIPTION	STD	DRAWING NUMBER			A/C/P	UNIT		GS
							A		700.900	
						SA234WP91				
					ITEM NO	MATERIAL CODE		UNIT	UNIT WEIGHT	
					VAR NO	MATERIAL SPECN		DI	QUANTITY	

TYPE OF PRODUCT
OR NAME OF
CUSTOMER/PROJECT

355-055

Bharat Heavy Electricals Ltd
UNIT: HIGH PRESSURE BOILER PLANT
TIRUCHIRAPALLI - 620014

	NAME	SIGNATURE	DATE
DRN	YADAV		24-09-2019
CHD	NIRMAL		24-09-2019
APPD	KS		24-09-2019

DEPT	CODE	ALL DIMENSIONS ARE IN MM	PROJECTION	SCALE	WEIGHT (Kg)	REF TO ASSY / OLD DWG
PP	121			N.T.S	700.900	

TITLE UNEQUAL TEE
Φ406.4X90(NOM.)/ Φ323.9X60(NOM.)

DRAWING NO : 3-10-000-09010

REV 01

REV	DATE	ALTERED :YADAV
01	07.08.20	CHD & APPD:NIRMAL
ZONE	RAW FORMING DRAWING AND WEIGHT UPDATED.	

CAUTION: The information on this document is the property of BHARAT HEAVY ELECTRICALS LTD. It must not be used directly or indirectly in any way detrimental to the interest of the company.

DRAWING NO: 3-10-283-06522

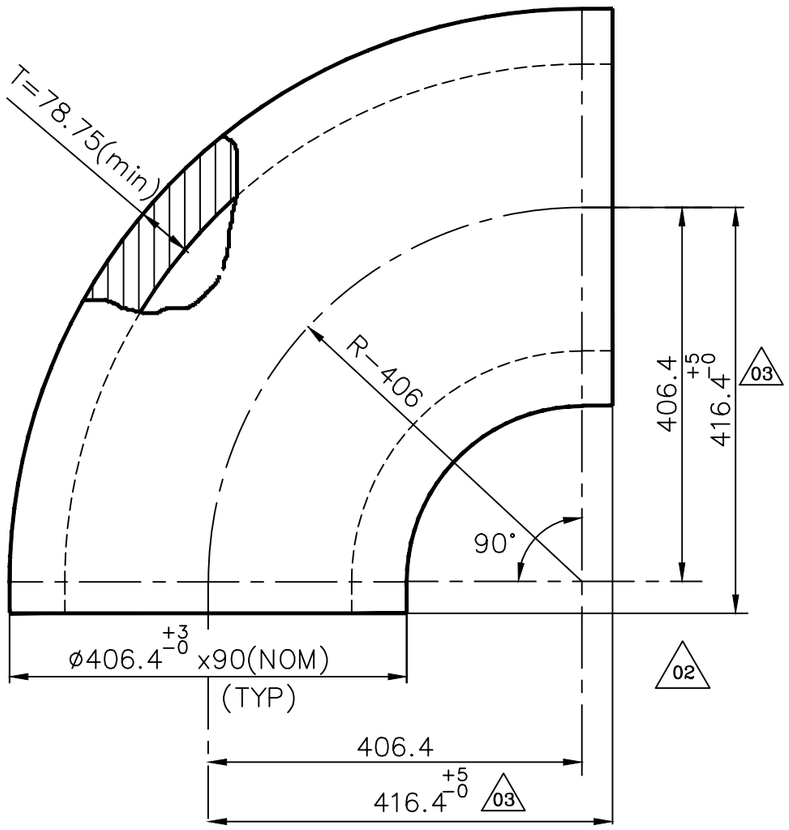

NOTES:

01. DESIGN MANUFACTURE AND INSPECTION AS PER IBR.
02. THE FORMED ELBOW SHALL BE SUPPLIED WITH PLAIN ENDS.
03. ALL DIMENSIONS SHOWN ARE FINISHED DIMENSIONS.
04. NORMALISING AND TEMPERING IS TO BE DONE AFTER HOT FORMING.
05. NO THICKNESS GREATER THAN 152.4mm SHALL BE USED WITHOUT PRIOR BHEL APPROVAL.
06. FITTING SPECIFICATION : SA 234 WP91
07. UNIFORM ID REQUIREMENT TO BE MET WITH AT LEAST 20mm FROM THE ENDS. (03)
08. THE MAXIMUM THICKNESS SHALL NOT EXCEED (Tnom X 1.06) AT ANY POINT ON THE ELBOW

FITTING MATERIAL CODE:- 921049550000

VARIANT NUMBER	ITEM NUMBER	DESCRIPTION	STD	DRAWING NUMBER	ITEM NO	MATERIAL CODE	A/C/P	UNIT	UNIT WEIGHT	GS
					VAR NO	MATERIAL SPECN		DI	QUANTITY	

REV	DATE	ALTERED	REV	DATE	ALTERED
04	29.04.20	:YADAV CHD & APPD: SRIDHARAN	03	11.04.14	: M BASEEM CHD & APPD: ANVARALI
ZONE	NOTE-08 ADDED		ZONE	DIMENSIONS & NOTE REVISED.	
02	29.11.13	: M BASEEM CHD & APPD: T.D.K.	01	05.11.13	: M BASEEM CHD & APPD: ANVARALI
ZONE	ELBOW SIZE, WEIGHT & DRG DESCRIPTION UPDATED BASED ON THE ALSTOM REVISED INPUT.		ZONE	NOTE-07 DELETED.	

CAUTION: The information on this document is the property of BHARAT HEAVY ELECTRICALS LTD. It must not be used directly or indirectly in any way detrimental to the interest of the company.

TYPE OF PRODUCT OR NAME OF CUSTOMER/PROJECT

355-055

Bharat Heavy Electricals Ltd
UNIT: HIGH PRESSURE BOILER PLANT
TIRUCHIRAPALLI - 620014

	NAME	SIGNATURE	DATE
DRN	M.BASEEM		09.10.2013
CHD	T.D.K.		09.10.2013
APPD	M.ANVARALI		10.10.2013

DEPT	CODE	ALL DIMENSIONS ARE IN MM	PROJECTION	SCALE	WEIGHT (Kg)	REF TO ASSY / OLD DWG
PP	121			NTS	460.00 (02)	3-10-283-06792 (03)

TITLE
ELBOW 90 DEG- RAW FORMING
D406.4x90(NOM)

DRAWING NO : 3-10-283-06522
REV 04

DRAWING NO: 3-12-000-14771

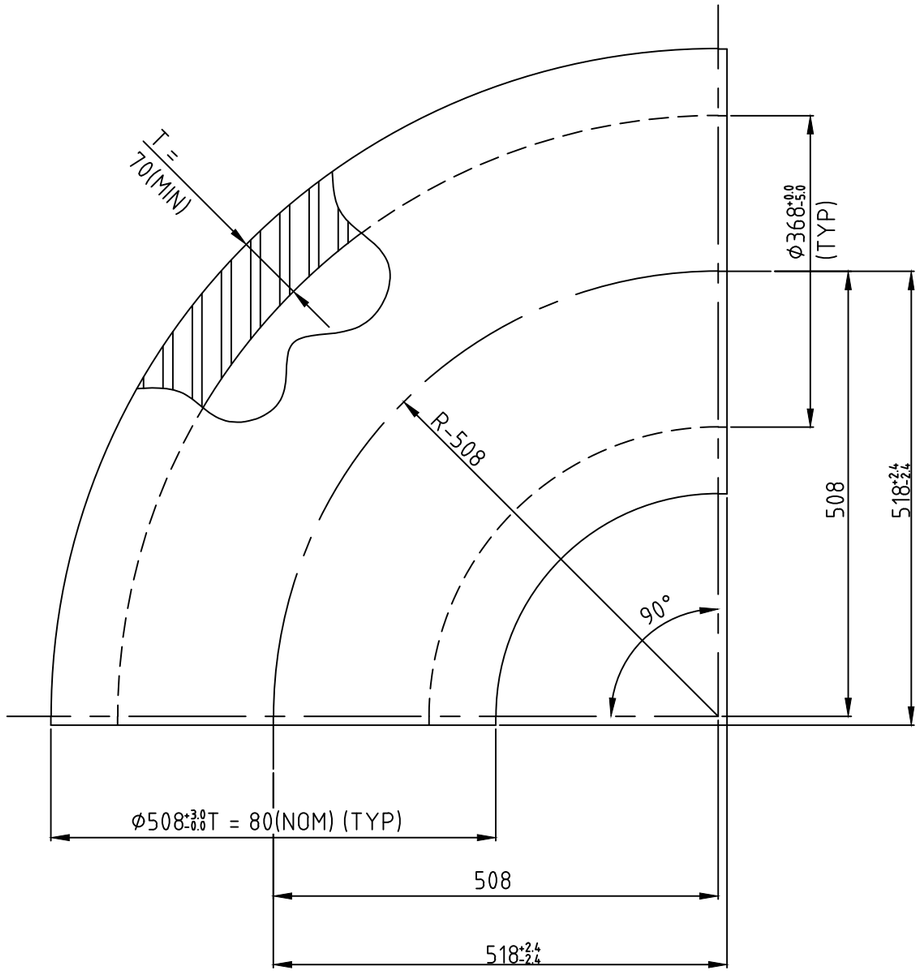

NOTES:

01. DESIGN, MANUFACTURE AND INSPECTION AS PER IBR.

02. ALL DIMENSIONS SHOWN ARE FINISHED DIMENSIONS.

03. NORMALIZING AND TEMPERING IS TO BE DONE AFTER HOT FORMING.

04. FITTING SPECIFICATION : SA234WP91

05. FORMED ELBOW SHALL BE SUPPLIED WITH PLAIN ENDS.

06. THE MAXIMUM THICKNESS SHALL NOT EXCEED (T_{nom} X 1.06) AT ANY POINT ON THE ELBOW.

07. FOR TOLERANCES REFER DRG. 4-03-000-00053.

08. FITTING MATERIAL CODE: 921044140000

VARIANT NUMBER	ITEM NUMBER	DESCRIPTION	STD	DRAWING NUMBER	ITEM NO	MATERIAL CODE	A/C/P	UNIT	UNIT WEIGHT	GS
						SA234WP91	A		673.8	
					VAR NO	MATERIAL SPECN		DI	QUANTITY	

CAUTION: The information on this document is the property of BHARAT HEAVY ELECTRICALS LTD. It must not be used directly or indirectly in any way detrimental to the interest of the company.

TYPE OF PRODUCT OR NAME OF CUSTOMER/PROJECT

Bharat Heavy Electricals Ltd
UNIT: HIGH PRESSURE BOILER PLANT
TIRUCHIRAPALLI – 620014
355–055

	NAME	SIGNATURE	DATE
DRN	AK DIXIT		10-06-2018
CHD	AK DIXIT		10-06-2018
APPD	SAK		10-06-2018

DEPT	CODE	ALL DIMENSIONS ARE IN MM	PROJECTION	SCALE	WEIGHT (Kg)	REF TO ASSY / OLD DWG
PP	121			N.T.S	673.8	

TITLE ELBOW 90 DEG RAW FORMING
Φ508 X 80 NOM

DRAWING NO : 3-12-000-14771

REV 01

REV	DATE	ALTERED : YADAV
01	29.04.20	CHD & APPD: SRIDHARAN
ZONE	NOTE-06 MODIFIED	

DRAWING NO: 3-12-000-14772

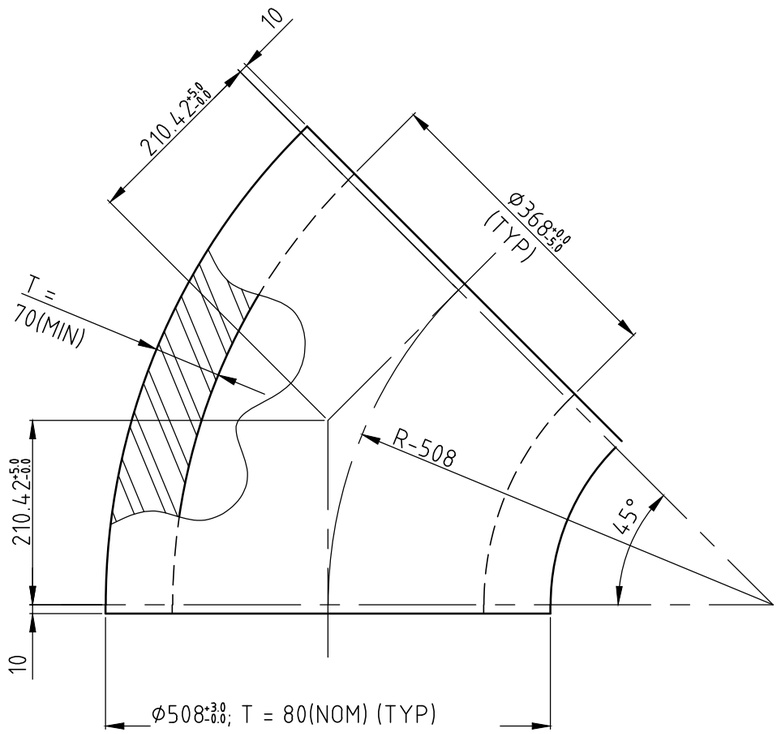

NOTES:

01. DESIGN, MANUFACTURE AND INSPECTION AS PER IBR.

02. ALL DIMENSIONS SHOWN ARE FINISHED DIMENSIONS.

01 03. NORMALIZING AND TEMPERING IS TO BE DONE AFTER HOT FORMING.

04. FITTING SPECIFICATION : SA234WP91

05. FORMED ELBOW SHALL BE SUPPLIED WITH PLAIN ENDS.

06. THE MAXIMUM THICKNESS SHALL NOT EXCEED (T_{nom} X 1.06) AT ANY POINT ON THE ELBOW.

07. FOR TOLERANCES REFER DRG. 4-03-000-00053.

08. FITTING MATERIAL CODE: 921044160000

VARIANT NUMBER	ITEM NUMBER	DESCRIPTION	STD	DRAWING NUMBER	ITEM NO	MATERIAL CODE	A/C/P	UNIT	UNIT WEIGHT	GS
							A		336.9	
						SA234WP91				
					VAR NO	MATERIAL SPECN		DI	QUANTITY	

CAUTION: The information on this document is the property of BHARAT HEAVY ELECTRICALS LTD. It must not be used directly or indirectly in any way detrimental to the interest of the company.

TYPE OF PRODUCT OR NAME OF CUSTOMER/PROJECT

355-055

Bharat Heavy Electricals Ltd
UNIT: HIGH PRESSURE BOILER PLANT
TIRUCHIRAPALLI – 620014

	NAME	SIGNATURE	DATE
DRN	AK DIXIT		10-06-2018
CHD	AK DIXIT		10-06-2018
APPD	SAK		10-06-2018

DEPT	CODE	ALL DIMENSIONS ARE IN MM	PROJECTION	SCALE	WEIGHT (Kg)	REF TO ASSY / OLD DWG
PP	121			N.T.S	336.9	

TITLE ELBOW 45 DEG RAW FORMING
Ø508 X 80 NOM

DRAWING NO : 3-12-000-14772

REV 02

REV	DATE	ALTERED : YADAV	REV	DATE	ALTERED : SUDHAKAR
02	29.04.20	CHD & APPD: SRIDHARAN	01	14.11.2019	CHD & APPD: YADAV
ZONE	NOTE-06 MODIFIED		ZONE	NOTES UPDATED.	

DRAWING NO: 3-12-000-15471

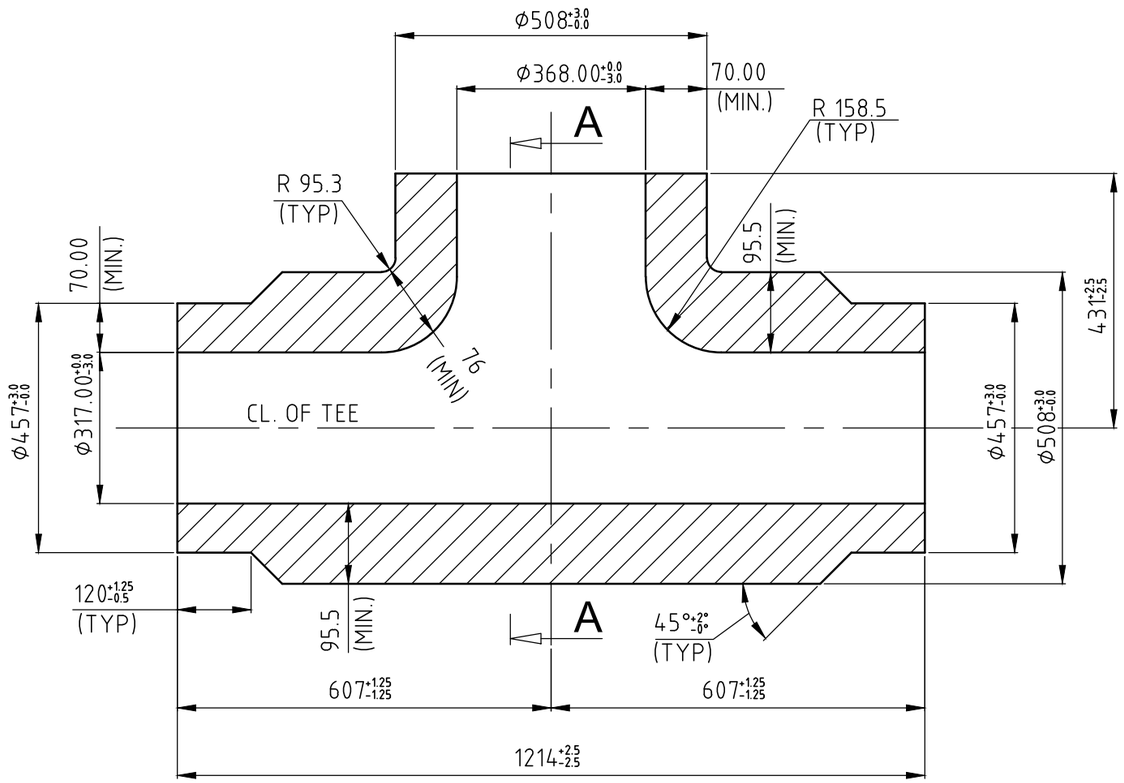

NOTES:

1. DESIGN, MANUFACTURE AND INSPECTION AS PER IBR.
2. FOR TOLERANCES REFER 4-03-000-00053.
3. ALL DIMENSIONS SHOWN ARE FINISHED DIMENSIONS.
4. NORMALIZING AND TEMPERING IS TO BE DONE AFTER HOT FORMING.
5. NO THICKNESS GREATER THAN 152.4mm SHALL BE USED WITHOUT PRIOR APPROVAL FROM BHEL.
6. FITTING SPECIFICATION: SA234WP91
7. THE FORMED TEE SHALL BE SUPPLIED WITH PLAIN ENDS.

FITTING MATERIAL CODE: 921051920000

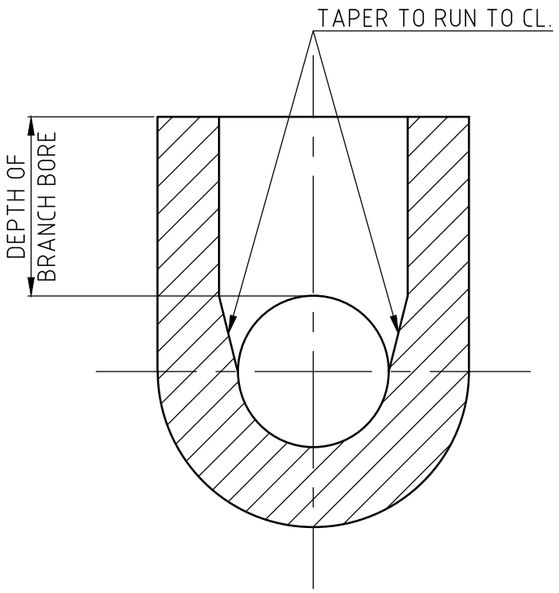

SECTION-AA

VARIANT NUMBER	ITEM NUMBER	DESCRIPTION	STD	DRAWING NUMBER	ITEM NO	MATERIAL CODE	A/C/P	UNIT	UNIT WEIGHT	GS
							A		1,304.000	
						SA234WP91				
					VAR NO	MATERIAL SPECN		DI	QUANTITY	

TYPE OF PRODUCT
OR NAME OF
CUSTOMER/PROJECT

Bharat Heavy Electricals Ltd
UNIT: HIGH PRESSURE BOILER PLANT
TIRUCHIRAPALLI – 620014
355-055

	NAME	SIGNATURE	DATE
DRN	YADAV		24-09-2019
CHD	KS		24-09-2019
APPD	KS		24-09-2019

REV	DATE	ALTERED :
01		CHD & APPD:
ZONE		

CAUTION: The information on this document is the property of BHARAT HEAVY ELECTRICALS LTD. It must not be used directly or indirectly in any way detrimental to the interest of the company.

DEPT	CODE	ALL DIMENSIONS ARE IN MM	PROJECTION	SCALE	WEIGHT (Kg)	REF TO ASSY / OLD DWG
PP	121			N.T.S	1,304.000	

TITLE **UNEQUAL TEE**
Ø508X80(NOM.)/ Ø457X80(NOM.)

DRAWING NO : 3-12-000-15471
REV 00

DRAWING NO: 3-12-000-15476

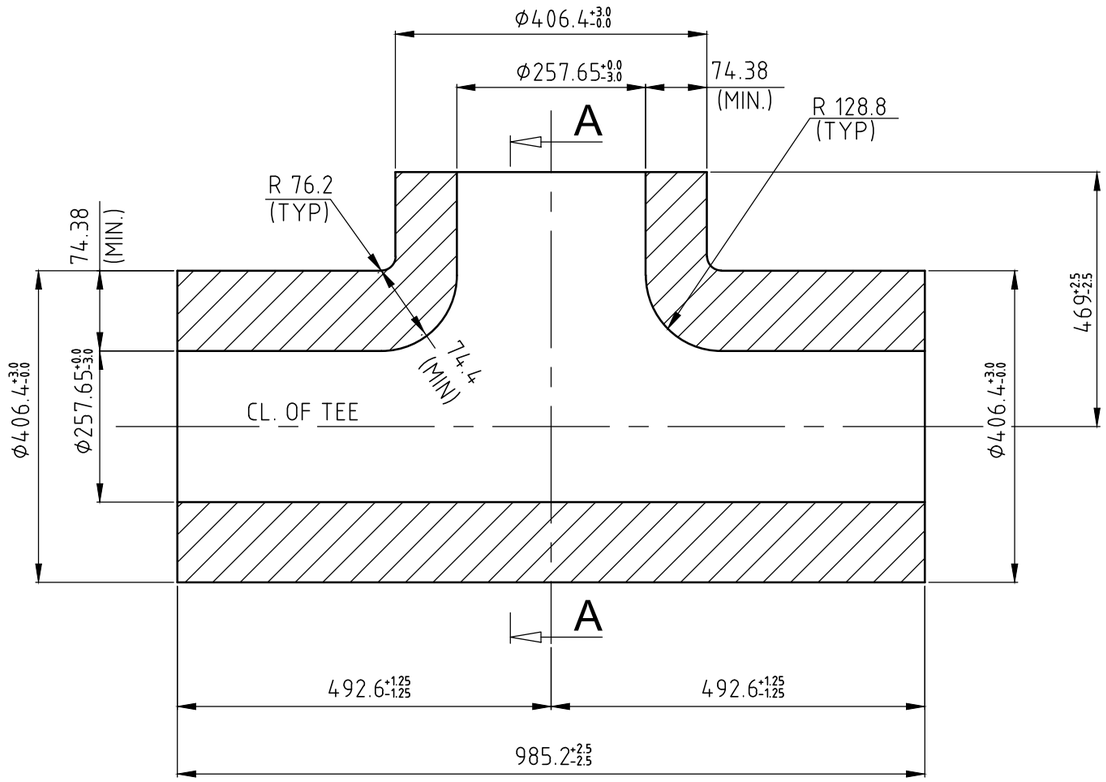

NOTES:

1. DESIGN, MANUFACTURE AND INSPECTION AS PER IBR.
2. FOR TOLERANCES REFER 4-03-000-00053.
3. ALL DIMENSIONS SHOWN ARE FINISHED DIMENSIONS.
4. NORMALIZING AND TEMPERING IS TO BE DONE AFTER HOT FORMING.
5. NO THICKNESS GREATER THAN 152.4mm SHALL BE USED WITHOUT PRIOR APPROVAL FROM BHEL.
6. FITTING SPECIFICATION: SA234WP91
7. THE FORMED TEE SHALL BE SUPPLIED WITH PLAIN ENDS.

FITTING MATERIAL CODE: 921052010000

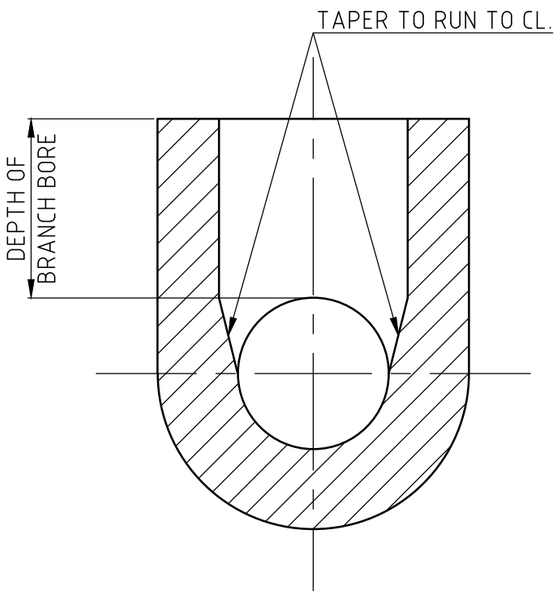

SECTION-AA

VARIANT NUMBER	ITEM NUMBER	DESCRIPTION	STD	DRAWING NUMBER	ITEM NO	MATERIAL CODE	A/C/P	UNIT	UNIT WEIGHT	GS
							A		777.000	
						SA234WP91				
					VAR NO	MATERIAL SPECN		DI	QUANTITY	

TYPE OF PRODUCT OR NAME OF CUSTOMER/PROJECT

355-055

Bharat Heavy Electricals Ltd
UNIT: HIGH PRESSURE BOILER PLANT
TIRUCHIRAPALLI – 620014

	NAME	SIGNATURE	DATE
DRN	YADAV		24-09-2019
CHD	KS		24-09-2019
APPD	KS		24-09-2019

REV	DATE	ALTERED :
01		CHD & APPD:
ZONE		

CAUTION: The information on this document is the property of BHARAT HEAVY ELECTRICALS LTD. It must not be used directly or indirectly in any way detrimental to the interest of the company.

DEPT PP | CODE 121 | ALL DIMENSIONS ARE IN MM | PROJECTION | SCALE N.T.S | WEIGHT (Kg) 777.000 | REF TO ASSY / OLD DWG

TITLE **EQUAL TEE**
Φ406.4X85(NOM.)/ Φ406.4X85(NOM.)

DRAWING NO : 3-12-000-15476 | REV 00

CORPORATE DRG ID:TP-DG-3-12-000-15476/00CORPOR

DRAWING NO: 3-12-179-11922

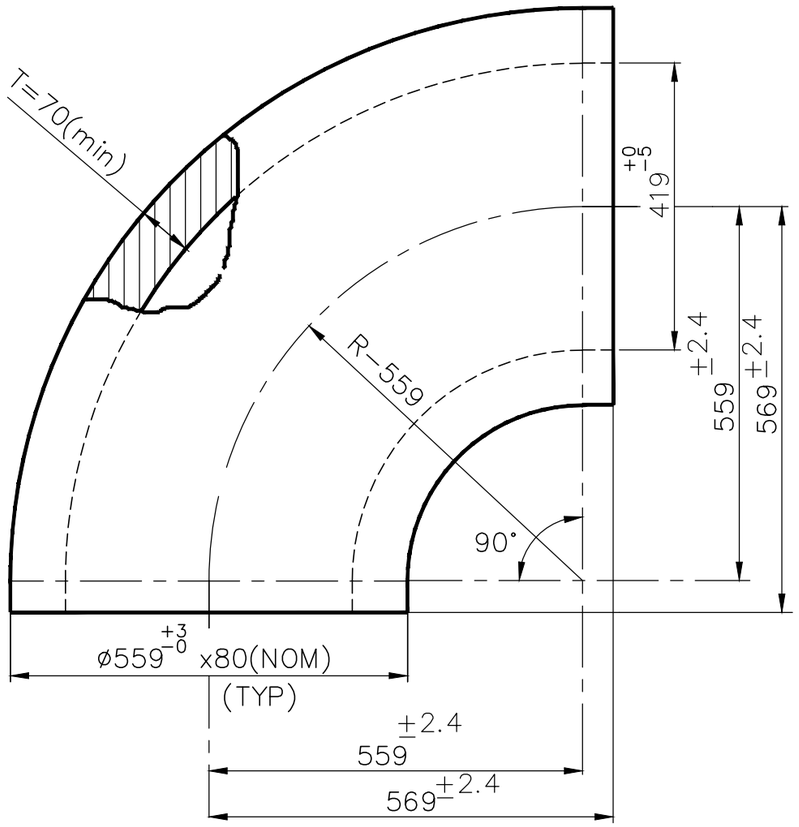

NOTES:

01. DESIGN MANUFACTURE AND INSPECTION AS PER IBR.
02. THE FORMED ELBOW SHALL BE SUPPLIED WITH PLAIN ENDS.
03. NORMALISING AND TEMPERING IS TO BE DONE AFTER HOT FORMING.
04. FITTING SPECIFICATION : SA 234 WP91
05. THE FORMED ELBOW SHALL BE SUPPLIED WITH PLAIN ENDS.
06. THE MAX THICKNESS SHALL NOT EXCEED (Tnom X 1.06) AT ANY POINT ON THE ELBOW.

FITTING MATERIAL CODE:- 92 104 189 0000

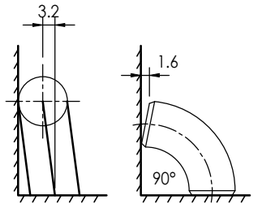

OFF-SQUARE TOLERANCES

VARIANT NUMBER	ITEM NUMBER	DESCRIPTION	STD	DRAWING NUMBER	ITEM NO / VAR NO	MATERIAL CODE / MATERIAL SPECN	A/C/P	UNIT / DI	UNIT WEIGHT / QUANTITY	GS

REV	DATE	ALTERED : YADAV	REV	DATE	ALTERED : DOMINIC
02	29.04.20	CHD & APPD: SRIDHARAN	01	19.11.19	CHD & APPD: YADAV
ZONE	NOTE-06 MODIFIED		ZONE	WEIGHT CORRECTED.	

CAUTION: The information on this document is the property of BHARAT HEAVY ELECTRICALS LTD. It must not be used directly or indirectly in any way detrimental to the interest of the company.

TYPE OF PRODUCT OR NAME OF CUSTOMER/PROJECT

Bharat Heavy Electricals Ltd
UNIT: HIGH PRESSURE BOILER PLANT
TIRUCHIRAPALLI - 620014
355-055

	NAME	SIGNATURE	DATE
DRN	ISMAIL		22.09.2014
CHD	R.MURALI		22.09.2014
APPD	S.A.K.		25.09.2014

DEPT: PP
CODE: 121
ALL DIMENSIONS ARE IN MM
PROJECTION
SCALE: NTS
WEIGHT (Kg): 01 758.000
REF TO ASSY / OLD DWG

TITLE: ELBOW 90 DEG- RAW FORMING D559x80(NOM)

DRAWING NO : 3-12-179-11922
REV 02

DRAWING NO: 3-12-179-12087

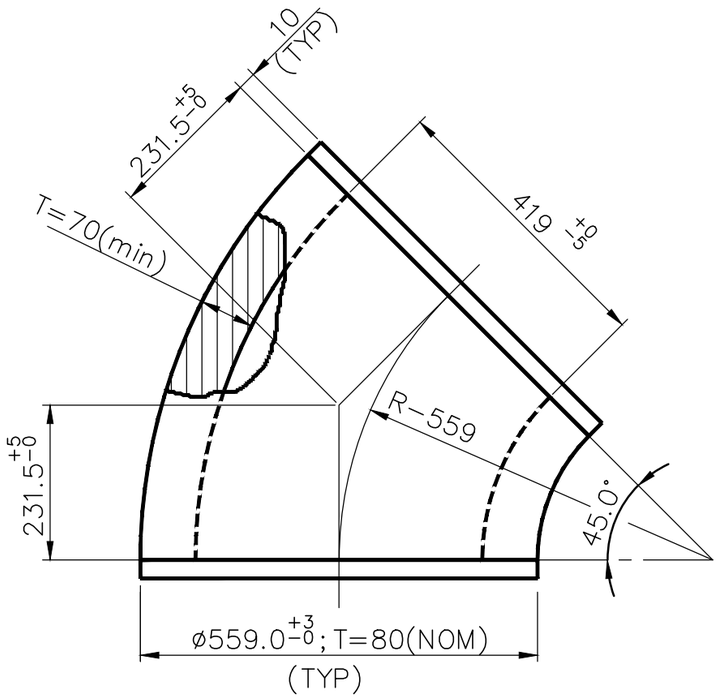

NOTES:

01. DESIGN MANUFACTURE AND INSPECTION AS PER IBR.
02. THE FORMED ELBOW SHALL BE SUPPLIED WITH PLAIN ENDS.
03. ALL DIMENSIONS SHOWN ARE FINISHED DIMENSIONS.
04. NORMALISING AND TEMPERING IS TO BE DONE AFTER HOT FORMING.
05. FITTING SPECIFICATION : SA 234 WP91
06. THE MAX THICKNESS SHALL NOT EXCEED (Tnom X 1.06) AT ANY POINT ON THE ELBOW.

FITTING MATERIAL CODE:- 92 104 204 0000

VARIANT NUMBER	ITEM NUMBER	DESCRIPTION	STD	DRAWING NUMBER	ITEM NO / VAR NO	MATERIAL CODE / MATERIAL SPECN	A/C/P	UNIT / DI	UNIT WEIGHT / QUANTITY	GS

REV	DATE	ALTERED : YADAV / CHD & APPD: SRIDHARAN	REV	DATE	ALTERED : DOMINIC / CHD & APPD: YADAV
02	29.04.20		01	19.11.19	
ZONE	NOTE-06 MODIFIED		ZONE	WEIGHT CORRECTED.	

CAUTION: The information on this document is the property of BHARAT HEAVY ELECTRICALS LTD. It must not be used directly or indirectly in any way detrimental to the interest of the company.

TYPE OF PRODUCT OR NAME OF CUSTOMER/PROJECT

Bharat Heavy Electricals Ltd
UNIT: HIGH PRESSURE BOILER PLANT
TIRUCHIRAPALLI - 620014
355-055

	NAME	SIGNATURE	DATE
DRN	ISMAIL		22.09.2014
CHD	R.MURALI		22.09.2014
APPD	S.A.K.		25.09.2014

DEPT PP | CODE 121 | ALL DIMENSIONS ARE IN MM | PROJECTION | SCALE NTS | WEIGHT (Kg) 01 387.000

REF TO ASSY / OLD DWG

TITLE
ELBOW 45 DEG- RAW FORMING
D559x80(NOM)

DRAWING NO : 3-12-179-12087 REV 02

DRAWING NO: 3-17-174-02283

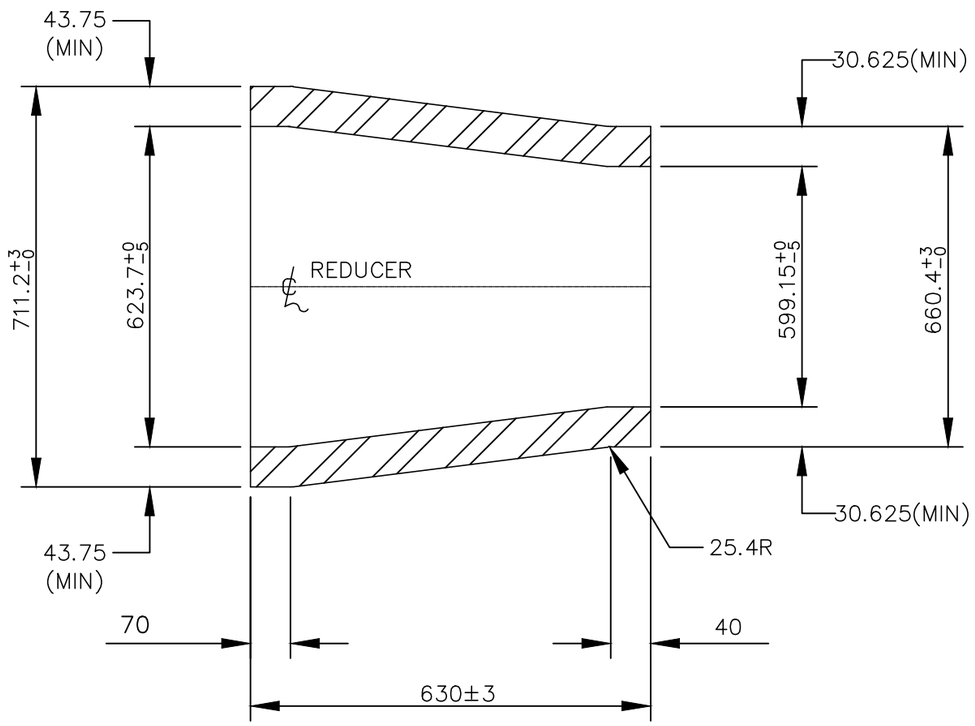

NOTES:

01. DESIGN MANUFACTURE AND INSPECTION AS PER IBR.
02. ALL DIMENSIONS SHOWN ARE FINISHED DIMENSIONS.
03. NORMALISING & TEMPERING IS TO BE DONE AFTER HOT FORMING.
04. FITTING SPECIFICATION : SA234WP91.
05. THE FORMED REDUCER SHALL BE SUPPLIED WITH PLAIN ENDS.

FITTING MATERIAL CODE-921173410000

VARIANT NUMBER	ITEM NUMBER	DESCRIPTION	STD	DRAWING NUMBER	ITEM NO	MATERIAL CODE	A/C/P	UNIT	UNIT WEIGHT	GS
					VAR NO	MATERIAL SPECN		DI	QUANTITY	

CAUTION: The information on this document is the property of BHARAT HEAVY ELECTRICALS LTD. It must not be used directly or indirectly in any way detrimental to the interest of the company.

TYPE OF PRODUCT
OR NAME OF
CUSTOMER/PROJECT

355-055

Bharat Heavy Electricals Ltd
UNIT: HIGH PRESSURE BOILER PLANT
TIRUCHIRAPALLI - 620014

	NAME	SIGNATURE	DATE
DRN	YADAV		23.09.19
CHD	YADAV		24.09.19
APPD	KS		24.09.19

REV	DATE	ALTERED :
01		CHD & APPD:
ZONE		

DEPT	ALL DIMENSIONS ARE IN MM	PROJECTION	SCALE	WEIGHT (Kg)	REF TO ASSY / OLD DWG
PP			NTS	416.300	
CODE 121					

TITLE
REDUCER-RAW FORMING
D711.2x50(NOM)/D660.4x35(NOM)

DRAWING NO : 3-17-174-02283
REV 00

DRAWING NO: 3-17-174-02284

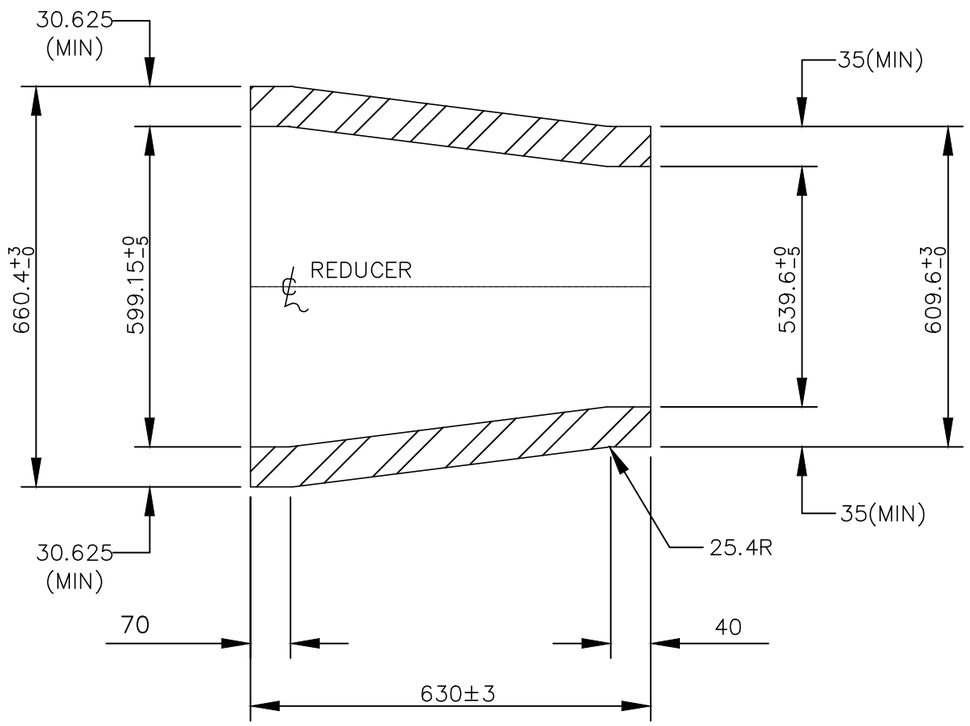

NOTES:

01. DESIGN MANUFACTURE AND INSPECTION AS PER IBR.
02. ALL DIMENSIONS SHOWN ARE FINISHED DIMENSIONS.
03. NORMALISING & TEMPERING IS TO BE DONE AFTER HOT FORMING.
04. FITTING SPECIFICATION : SA234WP91.
05. THE FORMED REDUCER SHALL BE SUPPLIED WITH PLAIN ENDS.

FITTING MATERIAL CODE-921173420000

VARIANT NUMBER	ITEM NUMBER	DESCRIPTION	STD	DRAWING NUMBER	ITEM NO	MATERIAL CODE	A/C/P	UNIT	UNIT WEIGHT	GS
					VAR NO	MATERIAL SPECN		DI	QUANTITY	

CAUTION: The information on this document is the property of BHARAT HEAVY ELECTRICALS LTD. It must not be used directly or indirectly in any way detrimental to the interest of the company.

TYPE OF PRODUCT
OR NAME OF
CUSTOMER/PROJECT

Bharat Heavy Electricals Ltd
UNIT: HIGH PRESSURE BOILER PLANT
TIRUCHIRAPALLI - 620014
355-055

	NAME	SIGNATURE	DATE
DRN	YADAV		23.09.19
CHD	YADAV		24.09.19
APPD	KS		24.09.19

REV	DATE	ALTERED :
01		CHD & APPD:
ZONE		

DEPT	ALL DIMENSIONS ARE IN MM	PROJECTION	SCALE	WEIGHT (Kg)	REF TO ASSY / OLD DWG
PP			NTS	336.280	
CODE 121					

TITLE
REDUCER-RAW FORMING
D660.4x35(NOM)/D609.6x40(NOM)

DRAWING NO : 3-17-174-02284
REV 00

DRAWING NO: 3-17-174-02285

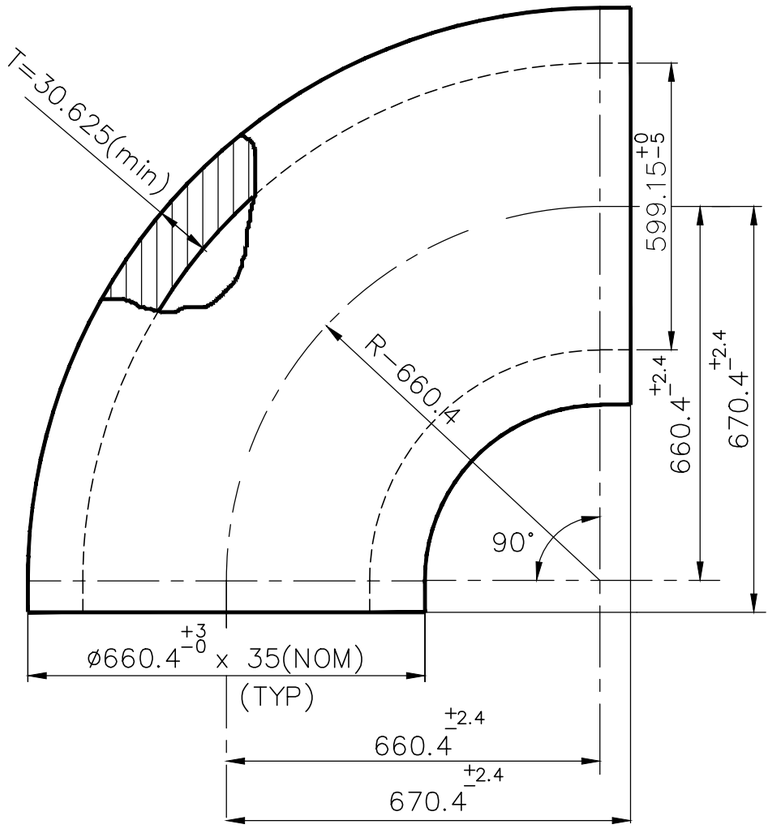

NOTES:

01. DESIGN MANUFACTURE AND INSPECTION AS PER IBR.
02. THE FORMED ELBOW SHALL BE SUPPLIED WITH PLAIN ENDS.
03. ALL DIMENSIONS SHOWN ARE FINISHED DIMENSIONS.
04. NORMALISING AND TEMPERING IS TO BE DONE AFTER HOT FORMING.
05. FITTING SPECIFICATION : SA 234 WP91
06. THE MAX THICKNESS SHALL NOT EXCEED (Tnom X 1.06) AT ANY POINT ON THE ELBOW.

FITTING MATERIAL CODE:- 921044410000

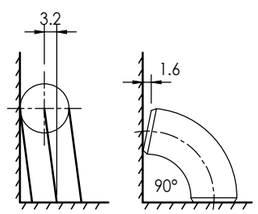

OFF-SQUARE TOLERANCES

VARIANT NUMBER	ITEM NUMBER	DESCRIPTION	STD	DRAWING NUMBER	ITEM NO	MATERIAL CODE	A/C/P	UNIT	UNIT WEIGHT	GS
						SA234WP91	A		559.970	
					VAR NO	MATERIAL SPECN		DI	QUANTITY	

REV	DATE	ALTERED : YADAV
01	29.04.20	CHD & APPD: SRIDHARAN
ZONE	NOTE-06 MODIFIED	

CAUTION: The information on this document is the property of BHARAT HEAVY ELECTRICALS LTD. It must not be used directly or indirectly in any way detrimental to the interest of the company.

TYPE OF PRODUCT OR NAME OF CUSTOMER/PROJECT

Bharat Heavy Electricals Ltd
UNIT: HIGH PRESSURE BOILER PLANT
TIRUCHIRAPALLI - 620014
355-055

	NAME	SIGNATURE	DATE
DRN	YADAV		20.09.2019
CHD	NIRMAL		20.09.2019
APPD	KS		20.09.2019

DEPT	CODE	ALL DIMENSIONS ARE IN MM	PROJECTION	SCALE	WEIGHT (Kg)	REF TO ASSY / OLD DWG
PP	121			NTS	559.970	

TITLE
ELBOW 90 DEG- RAW FORMING
D660.4x35(NOM)

DRAWING NO : 3-17-174-02285
REV 01

DRAWING NO: 3-17-174-02286

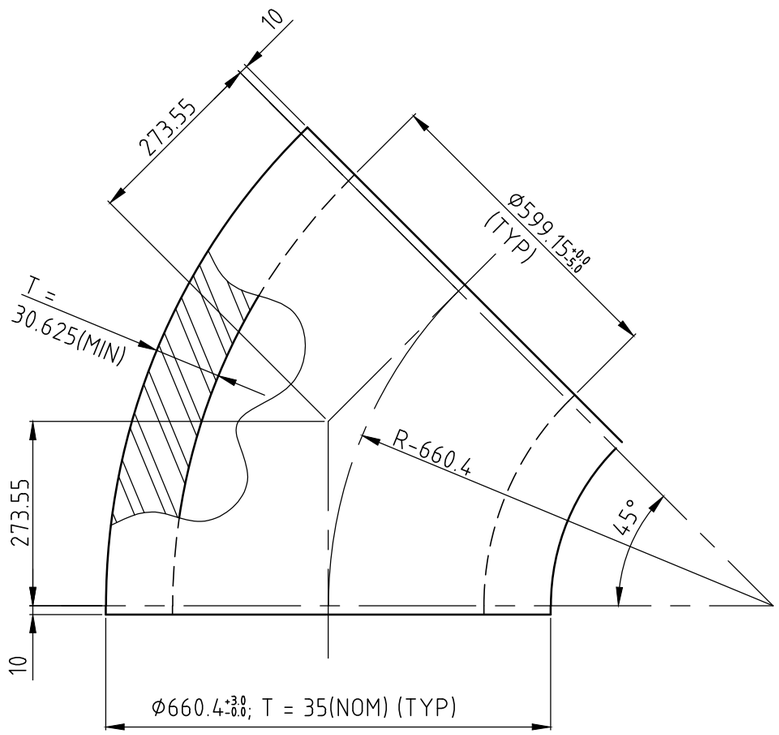

NOTES:

01. DESIGN, MANUFACTURE AND INSPECTION AS PER IBR.

02. ALL DIMENSIONS SHOWN ARE FINISHED DIMENSIONS.

03. NORMALIZING IS TO BE DONE AFTER HOT FORMING.

04. FITTING SPECIFICATION : SA234WP91

05. FORMED ELBOW SHALL BE SUPPLIED WITH PLAIN ENDS.

06. THE MAXIMUM THICKNESS SHALL NOT EXCEED (T_{nom} X 1.06) AT ANY POINT ON THE ELBOW.

07. FOR TOLERANCES REFER DRG. 4-03-000-00053.

08. FITTING MATERIAL CODE: 921044440000

VARIANT NUMBER	ITEM NUMBER	DESCRIPTION	STD	DRAWING NUMBER	ITEM NO / VAR NO	MATERIAL CODE / MATERIAL SPECN	A/C/P	UNIT / DI	UNIT WEIGHT / QUANTITY	GS
						SA234WP91	A		279.990	

CAUTION: The information on this document is the property of BHARAT HEAVY ELECTRICALS LTD. It must not be used directly or indirectly in any way detrimental to the interest of the company.

TYPE OF PRODUCT OR NAME OF CUSTOMER/PROJECT

355-055

Bharat Heavy Electricals Ltd
UNIT: HIGH PRESSURE BOILER PLANT
TIRUCHIRAPALLI – 620014

	NAME	SIGNATURE	DATE
DRN	YADAV		20.09-2019
CHD	NIRMAL		20.09-2019
APPD	KS		20.09-2019

REV	DATE	ALTERED : YADAV
01	29.04.20	CHD & APPD: SRIDHARAN
ZONE	NOTE-06 MODIFIED	

DEPT PP | CODE 121 | ALL DIMENSIONS ARE IN MM | PROJECTION | SCALE N.T.S | WEIGHT (Kg) 279.990 | REF TO ASSY / OLD DWG

TITLE ELBOW 45 DEG RAW FORMING
Ø660.4 X 35 NOM

DRAWING NO : 3-17-174-02286

REV 01

Annexure-1

INTEGRITY PACT

Between

Bharat Heavy Electricals Ltd. (BHEL), a company registered under the Companies Act 1956 and having its registered office at "BHEL House", Siri Fort, New Delhi - 110049 (India) hereinafter referred to as "The Principal", which expression unless repugnant to the context or meaning hereof shall include its successors or assigns of the ONE PART

and

_____, (description of the party along with address), hereinafter referred to as "The Bidder/ Contractor" which expression unless repugnant to the context or meaning hereof shall include its successors or assigns of the OTHER PART

Preamble

The Principal intends to award, under laid-down organizational procedures, contract/s for

Enquiry No.1402100016 dt.02.07.2021 for supply of Gr.91 Formed Fittings (Elbow, Tee & Reducer)

_____ . The Principal values full compliance with all relevant laws of the land, rules and regulations, and the principles of economic use of resources, and of fairness and transparency in its relations with its Bidder(s)/ Contractor(s).

In order to achieve these goals, the Principal will appoint Independent External Monitor(s), who will monitor the tender process and the execution of the contract for compliance with the principles mentioned above.

Section 1- Commitments of the Principal

1.1 The Principal commits itself to take all measures necessary to prevent corruption and to observe the following principles:-

1.1.1 No employee of the Principal, personally or through family members, will in connection with the tender for, or the execution of a contract, demand, take a promise for or accept, for self or third person, any material or immaterial benefit which the person is not legally entitled to.

1.1.2 The Principal will, during the tender process treat all Bidder(s) with equity and reason. The Principal will in particular, before and during the tender process, provide to all Bidder(s) the same information and will not provide to any Bidder(s) confidential/ additional information through which the Bidder(s) could obtain an advantage in relation to the tender process or the contract execution.

1.1.3 The Principal will exclude from the process all known prejudiced persons.

1.2 If the Principal obtains information on the conduct of any of its employees which is a penal offence under the Indian Penal Code 1860 and Prevention of Corruption Act 1988 or any other statutory penal enactment, or if there be a substantive suspicion in this regard, the Principal will inform its Vigilance Office and in addition can initiate disciplinary actions:

Section 2 - Commitments of the Bidder(s)/ Contractor(s)

2.1 The Bidder(s)/ Contractor(s) commit himself to take all measures necessary to prevent corruption. He commits himself to observe the following principles during his participation in the tender process and during the contract execution.

2.1.1 The Bidder(s)/ Contractor(s) will not, directly or through any other person or firm, offer, promise or give to the Principal or to any of the Principal's employees involved in the tender process or the execution of the contract or to any third person any material, immaterial or any other benefit which he/ she is not legally entitled to, in order to obtain in exchange any advantage of any kind whatsoever during the tender process or during the execution of the contract.

2.1.2 The Bidder(s)/ Contractor(s) will not enter with other Bidder(s) into any illegal or undisclosed agreement or understanding, whether formal or informal. This applies in particular to prices, specifications, certifications, subsidiary contracts, submission or non-submission of bids or any other actions to restrict competitiveness or to introduce cartelization in the bidding process.

2.1.3 The Bidder(s)/ Contractor(s) will not commit any penal offence under the relevant Indian Penal Code (IPC) and Prevention of Corruption Act; further the Bidder(s)/ Contractor(s) will not use improperly, for purposes of competition or personal gain, or pass on to others, any information or document provided by the Principal as part of the business relationship, regarding plans, technical proposals and business details, including information contained or transmitted electronically.

2.1.4 Foreign Bidder(s)/ Contractor(s) shall disclose the name and address of agents and representatives in India and Indian Bidder(s)/ Contractor(s) to disclose their foreign principals or associates. The Bidder(s)/ Contractor(s) will, when presenting his bid, disclose any and all payments he has made, and is committed to or intends to make to agents, brokers or any other intermediaries in connection with the award of the contract.

2.2 The Bidder(s)/ Contractor(s) will not instigate third persons to commit offences outlined above or be an accessory to such offences.

2.3 The Bidder(s)/ Contractor(s) shall not approach the Courts while representing the matters to IEMs and will await their decision in the matter.

Section 3 - Disqualification from tender process and exclusion from future contracts

If the Bidder(s)/ Contractor(s), before award or during execution has committed a transgression through a violation of Section 2 above, or acts in any other manner such as to put his reliability or credibility in question, the Principal is entitled to disqualify the Bidder(s)/ Contractor(s) from the tender process or take action as per the separate "Guidelines on Banning of Business dealings with Suppliers/ Contractors", framed by the Principal.

Section 4 - Compensation for Damages

4.1 If the Principal has disqualified the Bidder from the tender process prior to the award according to Section 3, the Principal is entitled to demand and recover the damages equivalent Earnest Money Deposit/ Bid Security.

4.2 If the Principal has terminated the contract according to Section 3, or if the Principal is entitled to terminate the contract according to section 3, the Principal shall be entitled to

demand and recover from the Contractor liquidated damages equivalent to 5% of the contract value or the amount equivalent to Security Deposit/ Performance Bank Guarantee, whichever is higher.

Section 5 - Previous Transgression

5.1 The Bidder declares that no previous transgressions occurred in the last 3 years with any other company in any country conforming to the anti-corruption approach or with any other Public Sector Enterprise in India that could justify his exclusion from the tender process.

5.2 If the Bidder makes incorrect statement on this subject, he can be disqualified from the tender process or the contract, if already awarded, can be terminated for such reason.

Section 6 - Equal treatment of all Bidders/ Contractors / Sub-contractors

6.1 The Principal will enter into agreements with identical conditions as this one with all Bidders and Contractors. In case of sub-contracting, the Principal contractor shall be responsible for the adoption of IP by his sub-contractors and shall continue to remain responsible for any default by his sub-contractors.

6.2 The Principal will disqualify from the tender process all bidders who do not sign this pact or violate its provisions.

Section 7 - Criminal Charges against violating Bidders/ Contractors /Subcontractors

If the Principal obtains knowledge of conduct of a Bidder, Contractor or Subcontractor, or of an employee or a representative or an associate of a Bidder, Contractor or Subcontractor which constitutes corruption, or if the Principal has substantive suspicion in this regard, the Principal will inform the Vigilance Office.

Section 8 - Independent External Monitor(s)

8.1 The Principal appoints competent and credible Independent External Monitor for this Pact. The task of the Monitor is to review independently and objectively, whether and to what extent the parties comply with the obligations under this agreement.

8.2 The Monitor is not subject to instructions by the representatives of the parties and performs his functions neutrally and independently. He reports to the CMD, BHEL.

8.3 The Bidder(s)/ Contractor(s) accepts that the Monitor has the right to access without restriction to all contract documentation of the Principal including that provided by the Bidder(s)/ Contractor(s). The Bidder(s)/ Contractor(s) will grant the monitor, upon his request and demonstration of a valid interest, unrestricted and unconditional access to his contract documentation. The same is applicable to Sub-contractor(s). The Monitor is under contractual obligation to treat the information and documents of the Bidder(s)/ Contractor(s) / Sub-contractor(s) with confidentiality in line with Non- disclosure agreement.

8.4 The Principal will provide to the Monitor sufficient information about all meetings among the parties related to the contract provided such meetings could have an impact on the contractual relations between the Principal and the Contractor. The parties offer to the Monitor the option to participate in such meetings.

8.5 The role of IEMs is advisory, would not be legally binding and it is restricted to resolving issues raised by an intending bidder regarding any aspect of the tender which allegedly restricts competition or bias towards some bidders. At the same time, it must be understood that IEMs are not consultants to the Management. Their role is independent in nature and the advice once tendered would not be subject to review at the request of the organization.

8.6 For ensuring the desired transparency and objectivity in dealing with the complaints arising out of any tendering process, the matter should be examined by the full panel of IEMs jointly as far as possible, who would look into the records, conduct an investigation, and submit their joint recommendations to the Management.

8.7 The IEMs would examine all complaints received by them and give their recommendations/ views to CMD, BHEL, at the earliest. They may also send their report directly to the CVO and the Commission, in case of suspicion of serious irregularities requiring legal/ administrative action. IEMs will tender their advice on the complaints within 10 days as far as possible.

8.8 The CMD, BHEL shall decide the compensation to be paid to the Monitor and its terms and conditions.

8.9 IEM should examine the process integrity, they are not expected to concern themselves with fixing of responsibility of officers. Complaints alleging mala fide on the part of any officer of the organization should be looked into by the CVO of the concerned organisation.

8.10 If the Monitor has reported to the CMD, BHEL, a substantiated suspicion of an offence under relevant Indian Penal Code/ Prevention of Corruption Act, and the CMD, BHEL has not, within reasonable time, taken visible action to proceed against such offence or reported it to the Vigilance Office, the Monitor may also transmit this information directly to the Central Vigilance Commissioner, Government of India.

8.11 The number of Independent External Monitor(s) shall be decided by the CMD, BHEL.

8.12 The word `Monitor' would include both singular and plural.

Section 9 - Pact Duration

9.1 This Pact shall be operative from the date IP is signed by both the parties till the final completion of contract for successful bidder and for all other bidders 6 months after the contract has been awarded. Issues like warranty / guarantee etc. should be outside the purview of IEMs.

9.2 If any claim is made/ lodged during currency of IP, the same shall be binding and continue to be valid despite the lapse of this pact as specified above, unless it is discharged/ determined by the CMD, BHEL.

Section 10 - Other Provisions

10.1 This agreement is subject to Indian Laws and jurisdiction shall be registered office of the Principal, i.e. New Delhi.

10.2 Changes and supplements as well as termination notices need to be made in writing. Side agreements have not been made.

10.3 If the Contractor is a partnership or a consortium, this agreement must be signed by all partners or consortium members.

10.4 Should one or several provisions of this agreement turn out to be invalid, the remainder of this agreement remains valid. In this case, the parties will strive to come to an agreement to their original intentions.

10.5 Only those bidders / contractors who have entered into this agreement with the Principal would be competent to participate in the bidding. In other words, entering into this agreement would be a preliminary qualification.

R Meganathan Digitally signed by R Meganathan Date: 2021.01.07 16:38:12 +05'30'

For & On behalf of the Principal

(Office Seal)

S ANAND KUMAR Digitally signed by S ANAND KUMAR Date: 2021.01.07 16:40:58 +05'30'

Place----------

Date----------

Witness:_____

(Name & Address) _____

_____

For & On behalf of the Bidder/

Contractor

(Office Seal)

Witness:_____

(Name & Address) _____

_____

Clause on IP in the tender

"Integrity Pact (IP)

(a) IP is a tool to ensure that activities and transactions between the Company and its Bidders/ Contractors are handled in a fair, transparent and corruption free manner. Following Independent External Monitors (IEMs) on the present panel have been appointed by BHEL with the approval of CVC to oversee implementation of IP in BHEL.

Sl	IEM	Email
1.	Shri Arun Chandra Verma, IPS (Retd.)	acverma1@gmail.com
2.	Shri Virendra Bahadur Singh, IPS (Retd.)	vbsinghips@gmail.com

(b) The IP as enclosed with the tender is to be submitted (duly signed by authorized signatory) along with techno-commercial bid (Part-I, in case of two/ three part bid). Only those bidders who have entered into such an IP with BHEL would be competent to participate in the bidding. In other words, entering into this Pact would be a preliminary qualification.

(c) Please refer Section-8 of IP for Role and Responsibilities of IEMs. In case of any complaint arising out of the tendering process, the matter may be referred to any of the above IEM(s). All correspondence with the IEMs shall be done through email only.

Note:

No routine correspondence shall be addressed to the IEM (phone/ post/ email) regarding the clarifications, time extensions or any other administrative queries, etc on the tender issued. All such clarification/ issues shall be addressed directly to the tender issuing (procurement) department's officials whose contact details are provided below:

Details of contact person(s):

(1)
Name: R. Meganathan
Deptt: Materials Management
Address: BHEL Trichy
Phone: (Landline/ Mobile)
+91 0431 2575458
Email: rmega@bhel.in
Fax:

(2)
Name: S. Anand Kumar
Deptt: Materials Management
Address: BHEL Trichy
Phone: (Landline/ Mobile)
+91 0431 2575215
Email: sak@bhel.in
Fax:

BHARAT HEAVY ELECTRICALS LIMITED, TRICHY-14
MATERIALS MANAGEMENT

PQR: C&F/CFP91: Rev.00 – SAGARDIGHI Date: 18.06.2021

Pre-Qualification requirements (PQR) for the procurement of Grade 91 Fittings through Open Tender (as per TDC: 0:423/09)

A) Organizational Capability:

1. Manufacturers having Fittings manufacturing facilities are only eligible to participate. Offer from traders, fabricators and stockists are not acceptable and will not be considered for evaluation.
   Vendor to indicate the nature of the firm. Product catalogue shall be submitted.

2. Suppliers shall submit facility report for fittings manufacturing. Suppliers without basic manufacturing facilities in-house, shall not be considered for evaluation. In house facilities for Heat treatment & Non-Destructive Testing are mandatory requirements for consideration of the offer.

3. Source of raw material for the manufacturing shall be from IBR approved well known steel maker or certified by IBR approved inspecting authority (Form-IV to be attached). The supplier shall confirm that the raw material test certificate/s will be furnished along with product test certificate/s.

4. Chemical, Mechanical testing shall be done in house or at Labs certified as per ISO 17025 or Government approved labs.

5. Suppliers shall submit a valid ISO 9001 certificate or Quality management system certificate or Written down procedure.

6. BHEL/End customer reserve the right to inspect the item ordered at any stage at vendor's works and if found not meeting the stipulated conditions, material is liable for rejection.

7. BHEL/End customer reserves the right to inspect the sample at vendor’s works for giving clearance before bulk production.

8. BHEL reserves the right to visit supplier's works to audit and inspect to ensure the capability for technical evaluation

B) Technical Competence:

1. Point by point confirmation to the TDC requirements is mandatory for consideration of offer and signed TDC shall be submitted.

2. Suppliers shall submit manufacturing process flow chart (Raw material to finished product) & Manufacturing Quality Plan (MQP) to meet the TDC requirements along with technical bid.

3. Suppliers shall submit the experienced manpower details specific to Manufacturing, Quality and NDE requirements.

C) **Past Experience/ Performance:**

1. Suppliers shall indicate their annual installed capacity for supply of fittings covered in the tendered specifications & it shall be more than the tendered quantity.

2. Suppliers shall have supplied Elbows, Tees, Reducers in the tendered specification. Details of supplies made in recent past detailing the quantity, specification, size & customer details along with the unpriced PO copies, proof of supply (such as invoice and test certificates) covering minimum and maximum sizes in specification SA234WP91 / SA182F91 meeting the tendered size requirements shall be submitted.

D) Financial Soundness:

1. Indigenous suppliers shall submit Audited copies of annual reports (Balance Sheets), Profit & Loss statement for last four years (or from date of incorporation whichever is less). Proprietary and partnership firms shall submit IT returns for last four years (or from date of incorporation whichever is less).

2. Import suppliers shall submit latest reports from a reputed third party business ranking agency like Dun & Bradstreet & creditreform.

Necessary supporting documents shall be submitted for meeting each of the above Pre-Qualification Criteria for evaluation of the offers.

BHEL reserves the right to consider/Not-consider the offers based on the evaluation of documents submitted for the above Pre-Qualification Criteria. BHEL also reserves the right to have on-site assessment of the facilities at supplier's works during the bid evaluation.

JAI GANESH V R
Digitally signed by JAI GANESH V R
Date: 2021.06.18 14:08:11 +05'30'

V R. Jai Ganesh
Dy. Manager/MM/RM

S SHYAMALADEVI
Digitally signed by S SHYAMALADEVI
Date: 2021.06.21 14:52:11 +05'30'

S Shyamaladevi
DM/QA

FORGE SHOP

1.00.00 Name of Company, Address

2.00.00 Type & No. of Forging Press : Forging hammer

Capacity - (Tonnes)

3.00.00 Max. size of Material that can be handled dimensions, weight and type of materials.

4.00.00 Production with relevant standards (for last three years)

Carbon Steel

Stainless Steel

Alloy steel

Inconel –

5.00.00 Heating Facilities -

5.10.00 Furnace - No. and capacity

5.10.10 Type - Oil Fired, Gas Fired, Electric heating

5.10.20 Dimensions

5.10.30 Mode of Temperature control & extent of automation.

5.10.40 Temperature recording facilities

5.20.00 Distance of heating furnace from Forging Press

5.30.00 Handling Facilities - Crane/Truck/Manual/ any other indicate list of such facility.

6.00.00 Availability of in-house Heat Treatment facility Yes/No

6.10.00 If yes: Type of heat treatment possible

FORGE SHOP

6.20.00 If no, source of Heat Treatment with relevant details.

6.20.10 Annealing -

6.20.20 Normalising -

6.20.30 Stress Relieving -

6.20.40 Quenching: - Water/Oil

Any other Heat treatment? -

6.20.50 Type & No. of Furnace -

6.20.60 Dimensions, Type of Temp. Control,
Temp - Time Recording facilities.

7.00.00 Source of Raw Materials -

Indigenous/imported (Indicate source and quantity of material procured during last three years)

8.00.00 Machining Facilities -

List of machines installed

9.00.00 Cutting facilities - Type & No. of Machine

10.00.00 Availability of testing facilities Yes/No

10.10.00 If no - Indicate source of testing with relevant details

10.20.00 If yes :-

10.20.10 Chemical Analysis: Method

10.20.20 Mech. Testing

10.20.21 Hardness testing

10.20.22 Metallorgraphy

10.20.23 Universal Tensile Testing M/C -
Ambient Low Temp.

10.20.24 Any other tests –

10.30.00 Non-destructive

10.30.10 Radiography

VTCTR03

FORGE SHOP

10.30.20 Ultrasonic Test

10.30.30 Dye Penetration

10.30.40 MPI

10.30.50 Any other NDE

11.00.00 Experience with Third Party/Statutory Agency:

Indicate the agency

12.00.00 Source of procurement of Dies & availability for Machining of such dies.

13.00.00 Consistency in supply:

13.10.00 Has the vendor produced items of similar nature in past?

13.20.00 Has the vendor maintained delivery commitments in past?

13.30.00 Has there been frequent labor trouble in past?

13.40.00 Has there been major upset due to faulty material management?

13.50.00 Is the system of planning & scheduling resilient enough to overcome temporary setbacks & make up lost time?

13.60.00 Has the vendor got standby arrangement for power?

13.70.00 Can the vendor quickly offload the work to other reliable sub-vendor?

13.80.00 Total order booked till date.

14.00.00 Remarks:

PLACE: SIGNATURE WITH SEAL

DATE:

Revision record:
Rev: 00: Supersedes TDC: 5:019 & can be used wherever the old TDC is specified.
Rev: 01: New materials, IGCsT added. UT, Hardness requirement modified. LPI, MPI requirement added.
Rev: 02: Flatness requirement added in clause no: 5.0
Rev: 03: TDC for, Pipe Fittings for NTPC contracts (TDC 0 427), Pipe fittings indigenous supply (TDC 0 422) has been merged with this TDC and named as Butt Welded formed pipe fittings. Cl. 2.0 General removed, scope limited to IBR only and other clauses renumbered. Limits of carbon modified. Aligned with NTPC requirements.
Rev: 04: Restriction in size below 2 in. removed based on Spares requirement.
Rev: 05: Cl: 2.0, 3.0, Revised.
Rev: 06: Product Heading changed. Cl 1.0 Scope and Raw material Sourcing added. Cl.2.0 & 3.0 merged and totally revised. Cl. 4.0, 5.0, 6.0 modified and renumbered.
Rev: 07 Dt: 10/11/2012: Cl 1.0, 2.0 & 5.0 Modified for SS material.
***Rev:** 08: Dt: 22/09/2017 Title, Clauses 1, 2, 5 & 6 modified; Gr 92 fittings requirements included in Cl 1, 2, 5 & 6; Creep requirements added in Clause 3; Design proof test requirement, if not done earlier, added in general notes..*
Rev: 09: Dt: 21/11/2017 - Cl. 3 & 6.a (15) modified.

1.0 MATERIAL SPECIFICATIONS:

All the codes, standards, specifications, drawings & procedures, etc., referred in this TDC shall be of latest revision as on the date of Enquiry/Purchase Order, whichever is earlier, unless specified otherwise.

- Fittings : Seamless Fittings only (Fittings made by welding are prohibited).
- ASME : Carbon Steel (CS): SA105, SA234; Alloy Steel(AS): SA 234,SA182, ASTM A234; Stainless Steel(SS): SA182, SA403[g]
- Additional Requirements & grades) : As listed below (Supplementary to above material specifications/ standards
- Grade, Size and Quantity : As per Purchase order &/ Drawing.

2.0 MANUFACTURING & TESTING REQUIREMENTS:

2.1 Machined Fittings (fittings machined from castings are prohibited; **Max size permitted 4") – Reducers, Couplings & End caps**

Starting material Rolled or Forged Bars, Killed steel	Heat treatment *as* per starting material specifications	CS – Normalised AS – Normalised & Tempered SS – Solution Annealed
	NDE – UT[d]	To be done after Heat treatment. For size above 40 mm – to be done as per ASTM A388 Acceptance to - ASME Sec.VIII Div.2 Cl.3.3.4
Finished fitting (after machining to required size)	Heat Treatment	Not required.
	NDE (for all sizes)	• MT (100%)- Procedure - As per ASTM E709. No linear indications (surface NDE indication whose length is ≥ three times its width) are acceptable. For WP91/F91 & WP92/F92 Wet MPI shall be done. • LPI – **SS**: Shall be done as per ASTM E165. No linear indications are acceptable. • **SS:** Finished fittings shall be checked for radioactive contamination and reported. Survey meter shall be used to measure at 5 cm near the surface. Acceptance limits: Shall be less than 0.1 milli Rontgen (MR) per hr or 1 micro Sievert per hr.
	Hardness	WP5 - 217 HBW max. SA105 – 137 HBW to 187 HBW. WPB, WPC, WP11/F11, WP12/F12, WP22/F22 – 197 HBW max. WP91/F91 - 195 HBW to 248 HBW – 100% to be checked WP92/F92 – 191 HBW to 269 HBW – 100% to be checked.
	Dimension	ASME B16.9 & ASME B16.11, As per Engineering Drawing
	Bend Test (for IBR items)	Specimen: 19mm. Thickness (t) x 25.4mm width - cold bent 180 deg. over thin section without fracture, mandrel radius: CS :<=6.35 mm.

		AS, SS : <=1.5 times specimen thick.

2.2 Seamless Formed Fittings – Elbows, Tees, Reducers, Dished End (End Cover/ *Cap*)

Starting material:	Heat treatment as per starting material specifications	CS – Normalised AS – Normalised & Tempered SS – Solution Annealed
1)Tube & Pipe	NDE – UT[d]	Shall be done as per - ASTM E213 with longitudinal notch of 5% wall thickness with min. 0.3 mm and max.1.5 mm. Actual measured notch depth to be specified in Test Certificate.
2)Forged blank (For end covers)	NDE – UT[d]	For size above 40 mm UT shall be done as per - ASTM A388 In acceptance to - ASME Sec.VIII Div.2 Cl.3.3.4
3) Plate	NDE – UT[d]	For size above 10mm SA 578, Acceptance Level - B
Finished fitting (cold/hot forming)	Heat treatment after forming	Shall be done as per SA234/SA403. When Heat Treatment is required it shall be done as per the below table values:

Material	Heat Treatment Temp,C		Soaking time, hr/in	
	Normalising	Tempering	Normalising	Tempering
CS-WPB & WPC	870-900	-	1/2	-
AS-WP11, WP12	920-950	655+- 15	1/2	1
AS-WP5, WP22	920-950	695+- 15	1/2	1
AS-WP91	1040-1080	750-780	1/2	1
AS-ASTM A234 WP 92	1040-1080	750-780	1/2	1

Stainless Steel: All grades - Solution Annealed: 1050-1100 Deg C
Soaking time: ½ hr per inch with minimum 15 minutes.
Note
1.Normalising shall be done for a minimum time of 30 min while tempering to be done for a minimum time of 60 min for all above materials except SS.

	NDE (for all sizes) – Except for Plate formed Dished end	• MT (100%) - Shall be as per - ASTM E709 No linear indications are acceptable. For WP91 & *WP92* Wet MPI shall be done. • LPI – **SS**: Shall be done as per ASTM E165. No linear indications are acceptable. • **SS:** Finished fittings shall be checked for radioactive contamination and reported. Survey meter shall be used to measure at 5cm near the surface. Acceptance limits: Shall be less than 0.1 milli Rontgen (MR) per hr or 1 micro Sievert per hr.
	NDE–for Plate formed Dished end	For Plate Formed Dished end – 100% MT as per - ASTM E709 on both inner and outer surfaces of Knuckle radius and weld ends. No linear indications are acceptable.
	NDE – UT[d] For OD > or=219mm & W.T >or= 6mm	If made from Pipe & Tube – Shall be done as per - ASTM E213 with longitudinal notch of 5% wall thickness with max.1.5mm and min. 0.3mm. Actual measured notch depth to be specified in Test Certificate.
		If made from Forging Shall be as per - ASTM A388 In acceptance to - ASME Sec.VIII Div.2 Cl.3.3.4
		If made form Plate shall be as per A578 Level-B
	Hardness	WP5 – 217 HBW max. WPB, WPC, WP11, WP12, WP22 – 197 HBW max. WP91 - 195 HBW to 248 HBW – 100% to be checked. WP92 – 191-269 HBW max. – 100% to be checked.
	Dimension	ASME B16.9 & ASME B16.11, As per Engineering drawing.
	Bend Test	Specimen : 25.4 mm x 19 mm thick - cold bent 180 deg. over thin section without fracture, internal radius of bend: CS :<=6.35 mm. AS, SS: <=1.5 times specimen thick.

	(if starting material is forged blank) (for IBR items)	

2.3 Forged Fittings – Elbows, Tees, Reducers, Couplings, Flanges & Dished End (End Cover / *Cap*)

Shall be forged to the shape with a minimum forge reduction ratio of 1:4. Fitting shall not be machined from a forged block.

<table>
<tr><td>Starting material:
Rolled or forged Bars, blooms, billets and Killed steel</td><td>Heat treatment as per starting material specifications</td><td>CS – Normalised
AS – Normalised & Tempered
SS – Solution Annealed</td></tr>
<tr><td>1)Tube & Pipe, forged pipe/hollow</td><td>NDE – UTd</td><td>Shall be done as per - ASTM E213 with longitudinal notch of 5% wall thickness with min. 0.3 mm and max.1.5 mm. Actual measured notch depth to be specified in Test Certificate.</td></tr>
<tr><td>2)Forged blank (For end covers)</td><td>NDE – UTd</td><td>For size above 40 mm
UT shall be done as per - ASTM A388
In acceptance to - ASME Sec.VIII Div.2 Cl.3.3.4</td></tr>
<tr><td>3) Plate</td><td>NDE – UTd</td><td>For size above 10mm
SA 578, Acceptance Level - B</td></tr>
<tr><td>After forging (cold/hot forging)</td><td>Heat treatment</td><td>Shall be done as per SA105/SA182.
When Heat Treatment is required it shall be done as per the below table values:
<table>
<tr><th rowspan="2">Material</th><th colspan="2">Heat Treatment Temp,C</th><th colspan="2">Soaking time, hr/in</th></tr>
<tr><th>Normalising</th><th>Tempering</th><th>Normalising</th><th>Tempering</th></tr>
<tr><td>CS- SA105</td><td>870-900</td><td>-</td><td>1/2</td><td>-</td></tr>
<tr><td>AS- SA182 F11 & F12</td><td>920-950</td><td>655+- 15</td><td>1/2</td><td>1</td></tr>
<tr><td>AS- SA182 F5 & F22</td><td>920-950</td><td>695+- 15</td><td>1/2</td><td>1</td></tr>
<tr><td>AS- SA182 F91 & F92</td><td>1040-1080</td><td>750-780</td><td>1/2</td><td>1</td></tr>
</table>
Stainless Steel: All grades - Solution Annealed: 1050-1100 Deg C Soaking time: ½ hr per inch with minimum 15 minutes.
Note
1.Normalising shall be done for a minimum time of 30 min while tempering to be done for a minimum time of 60 min for all above materials except SS.</td></tr>
<tr><td rowspan="4">Finished fitting</td><td>NDE – UT[d]
For OD > or = 219mm</td><td>UT shall be done as per - ASTM A388
In Acceptance to - ASME Sec.VIII Div.2 Cl.3.3.4</td></tr>
<tr><td>NDE (for all sizes)</td><td>• MT-(100%) Shall be done as per ASTM E709.
No linear indications are acceptable.
For F91 & F92 Wet MPI shall be done.
• LPI – SS: Shall be done as per ASTM E165. No linear indications are acceptable.
• SS: Finished fittings shall be checked for radioactive contamination and reported. Survey meter shall be used to measure at 5cm near the surface. Acceptance limits: Shall be less than 0.1 milli Rontgen (MR) per hr or 1 micro Sievert per hr.</td></tr>
<tr><td>Hardness</td><td>SA105 – 137 HBW to 187 HBW.
F5 – 143-217 HBW; F9 – 179-217 HBW max.
F11, F12 – 143 HBW to 207 HBW, F22 – 156-207 HBW max.
F91 - 195 HBW to 248 HBW – 100% to be checked
SA182 F92 – 191- 269 HBW max. – 100% to be checked.</td></tr>
<tr><td>Dimension</td><td>ASME B16.5 & ASME B16.11, As per engineering drawing.</td></tr>
</table>

	Bend Test (for IBR items)	Specimen: 19mm. Thickness (t) x 25.4mm width - cold bent 180 deg. over thin section without fracture, mandrel radius: CS :<=6.35 mm. AS, SS : <=1.5 times specimen thick.

General requirements:

a. Product analysis as per S50 of ASTM A960 is required.
b. Carbon < or = 0.25% for WPB (all thickness), WPC and SA105 (thickness < or = 20mm)
c. Carbon < or = 0.30% for WPC and SA105 (thickness > 20mm)
d. If UT not done on the starting material, the same shall be done by the fitting manufacturers before forming / fabrication.
e. Mechanical Testing including hardness testing: Quantum of testing as per IBR (except for hardness testing of Gr 91 & 92) – Test samples shall be tested in the Heat treatment of fitting delivered condition. For Gr 91 & 92 fittings, hardness testing shall be done on 100% of fittings being supplied (either on ends or surface).
f. Pipe made from plate as a starting material and long seam welded should not be used.
g. All raw materials used in steel making including incoming scrap shall be checked by supplier to ensure freedom from radioactivity (applicable for SS material only).
h. Design proof test as per ASME B16.9 should be carried out for the geometric shape and size ordered if already not done.

3.0 Creep testing shall be carried out as per SIP:RM:01 (latest revision) whenever indicated in the Enquiry/Purchase Order/Engineering Drawing.

4.0 REPAIRS AND FINISH:

The products shall be free from injurious defects like crack,seam etc. with workman like finish. Repairs involving fusion welding is prohibited. Surface defects can be removed by mechanical means and the defective areas shall be merged with adjacent surface. Minimum thickness after repair shall meet the drawing / specification requirements. Flatness on curved surfaces of fittings shall be limited to 6% of nominal OD. Thickness : Outer Diameter and Transition : Variation shall be merged smooth to min 1:4 taper.

5.0 MARKING, PRESERVATION AND PACKING:

The following details to be neccessarily hot stamped 1. Heat number, 2. Inspecting Authority Seal 3. Specification Grade, code case (if applicable) and Size, 4. Company Seal and "B16"(for ANSI fittings).
The rest to be marked as per Specification.
Adittionally The following to be painted :
for OD > 108mm : PO No., Sl. No., Specification ,"BHEL-Tiruchirappalli", Drawing.No. & Weight
for OD <= 108mm : Sl. No., Specification
CS & AS fittings to be rust preventive coated after shot blasting inside & out side & packed to avoid damage.
SS fittings to be surface treated (Pickling, Passivation) as per ASTM A380 both inside and outside.

6.0 INSPECTION AND CERTIFICATION:

a. Products must be inspected at works and the test certificates must be countersigned by the Inspecting Authority as indicated below:

Imported items: Inspecting Authority approved by IBR for the country of origin with Form III-C (for all fittings except dished ends), Form III-I (for dished ends) as per IBR and additonal MTC as given below.

Indigenously supplied IBR items: Director of Boilers/Chief Inspector of Boilers/Inspecting Authority approved by IBR, for the respective state in India with Form III-C (for all fittings except dished ends), Form III-I (for dished ends) as per IBR and additonal MTC as given below.

Separate Manufacturer's Test certificate (MTC) in English language with following details, shall accompany all products:

1. Purchase Order No.(BHEL),TDC No. & Test certificate number
2. Specification, Grade with applicable year of code & code case (if applicable), Heat Number, Drawing No.,Quantity & Size
3. Supplier of the steel used in making the finished product
4. Forming process, Chemistry including incidental elements - Heat wise.
5. Heat treatment details: temperature, soaking time, cooling medium (for quenching).
6. Mechanical test results, Hardness, NDE test results with reference & acceptance standard.

7. Detailed NDE reports for MT, LPI and UT shall be submitted along with MTC.
8. Photomicrograph at 400X magnification for F91, WP91, F92 & WP92 in final Heat treated condition of fittings.
9. PMI certification for all Alloy steels fittings.
10. Print of the stamp of Inspecting Authority, which is used in the fitting.
11. Dimensional reports for each product
12. Repair details if any.
13. Certified copy of TC for starting material.
14. Guarantee certificate for retainability of hydrostatic test pressure corresponding to that of matching pipe of equivalent material or Hydro static test report as applicable.
15. ***Creep test report as per SIP:RM:01 (latest revision) whenever indicated in the Enquiry/Purchase Order/Engineering Drawing.***

1. For CE-marking items the TCs with details specified above shall be submitted as per EN-10204 (latest) For pressure parts test certificates of type 3.1 or 3.2 is acceptable.

Type 3.1 – Suppliers shall have ISO 9001-2008/2015 (with validity as applicable) certification certified by Notified Body recognized by European community and test certificate certified by suppliers authorized inspection representative.

Type 3.2 – Components inspected and test certificates certified by both the supplier's authorized inspection representative and Notified Body recognized by European community.

2. For non pressure parts test certificates of type 2.2 is acceptable.
   Type 2.2 – suppliers test certificates signed by suppliers authorized inspection representative with test results as required by this TDC.

b. For SS: Measured Radioactivity levels at 5cm from the surface of the fitting shall be reported in the Mill Test Certificate (not to be recorded in IBR Form).

21.11.2017	21/11/17	21/11/17	21/11/17	21.11.17	21/11/17
Abdur Rahman	G. Panneer Selvam	M. Nadanakumar	R. Dharmar	N. Kirubakaran	Amit Roy
Sr.Engineer/QA	DGM/QA	AGM/MM	AGM/QC	SDGM/PE/FB	AGM/QA&BE
Prepared By	**Reviewed By**				**Approved By**