FIRST ANGLE PROJECTION

(ALL DIMENSIONS ARE IN mm)

DRG. NO. 0-103-07-62011 SH. 01 OF 01

SECTION B-B

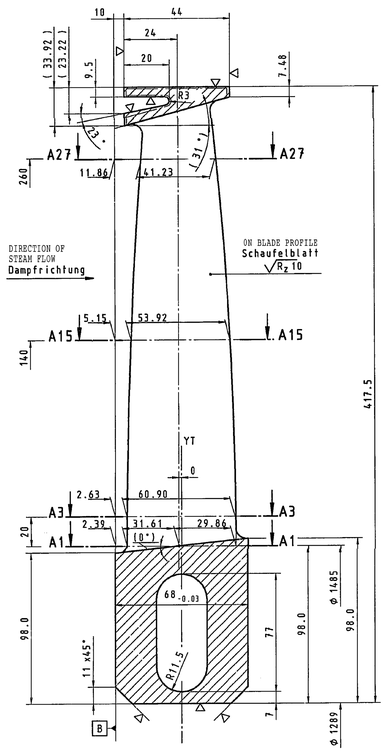

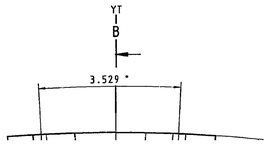

ALLARO
R5 umlauf

PRESSURE SI
Druckse

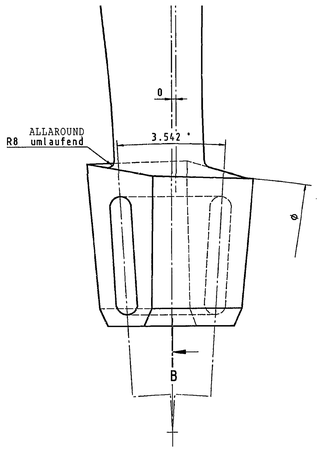

SECTION A27-A27

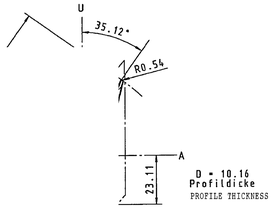

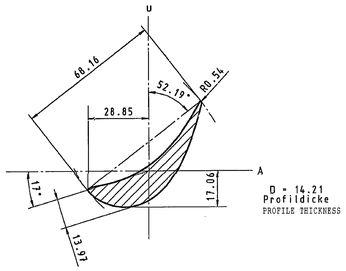

SECTION A3-A3

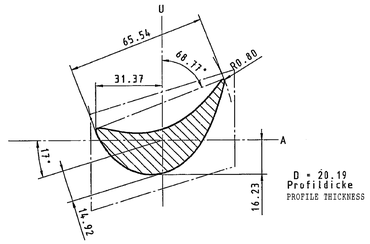

DIMENSIONS FOR DIE
Maßbild für die

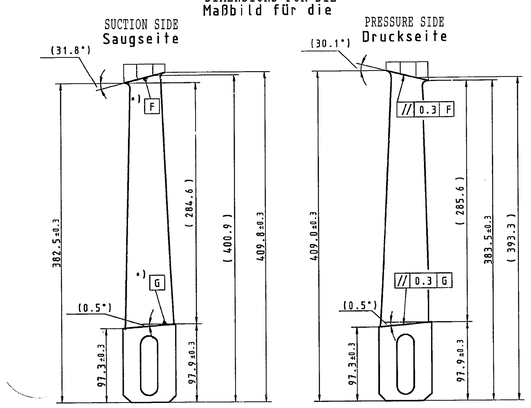

*) bezogen auf Nachbarschaufel
RELATED TO ADJACENT BLADE

Rohteil in Zentrierlage
BLANK IN CENTER POSITION

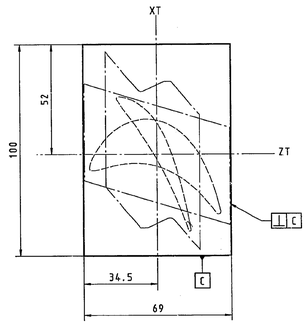

VIEW Z

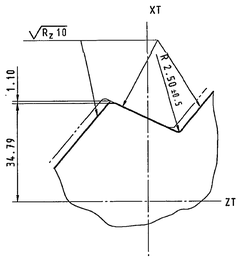

SECTION A1-A1

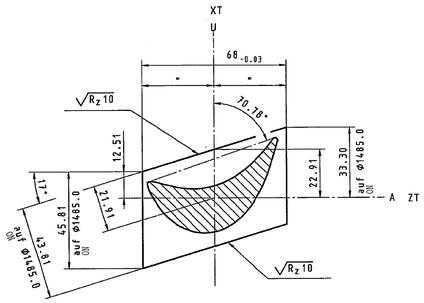

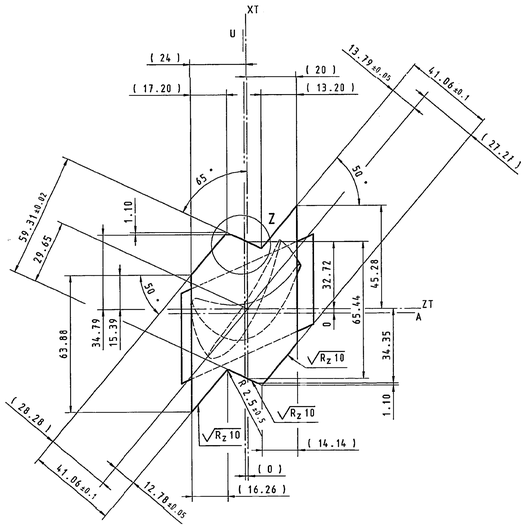

Alle Maße auf Ø2124 bezogen
ALL DIMENSIONS ARE RELATED ON Ø2124

R

Strak-Nr: 19114
Profilzeichnung: 7651-24606/010 bis /011
Nutzeichnung: 6661242

NOTES:

1. PROFILE CO-ORD. AS PER DRG. NO. 0-103-07-62009-00 (2 SH)

TOLERANCES
Toleranzen

⌒ 0.25	Profilform	PROFILE FORM
±0.25	Profildicke	PROFILE THICKNESS
±0.25	Profillänge	PROFILE LENGTH
±0.30	Profilwinkel	PROFILE ANGLE
±0.02	Teilung	PITCH

TAPER VALUES FOR JIG LENGTH = 1000mm
Konuswerte f. Vorrichtungsl. 1000 mm

			ROOT FuB	SHROUD Deckpl.
BLADE POSITION	Schaufellage	Ex	9.031	—
TABLE INCLINATION	Tischneigung	Ey	59.086	—
MEASURED HEIGHT	Meßhöhe	Eh	37.959	—

▽▽ = 3.2/ ▽ = 12.5/ , √Rz10 = 0.4/

-00
VAR

TYPE OF PRODUCT OR
NAME OF CUSTOMER/PROJECT

	NAME	SIGN.	DATE	NO.OF VAR.
DRN.	SCS/TSP		23.5.2000	NA
CHD.	T.S.PRABHAKAR		23.5.2000	
APPD.	C.N.V.RAMANA		23.5.2000	

DEPT. GTD / DEPT CODE 415	UNTOL. DIMS. ±0.1 ±0.1/1°	SCALE NTS	WEIGHT (KG) NA	REF. TO ASSY. DRG. NA	ITEM NO. NA	NO.OF ITEMS NA

TITLE LP LOCK BLADE-1R (F116-64/72-320-70.78°) (NEW 5.0Sqm)

CARD CODE N.A.

DRAWING NO. 0-103-07-62011 REV. 00

SHT. No. 01 NO. OF SHT. 01

SIGN AND DATE | TOP DRG. NO. 7651-24614/001 REV:A | COMP.PRF.FILE NAME 0103070201L1-SCN-30D.TIF

GENERAL DIMENSIONAL LIMITS,FITS & TOLERANCES AS PER HY023026I

INVENTORY NO

THE INFORMATION ON THIS DOCUMENT IS THE PROPERTY OF IT MUST NOT BE USED DIRECTLY OR INDIRECTLY IN ANY WAY DETRIMENTAL TO THE INTEREST OF THE COMPANY

REV.	DATE	ALTERED CHD/APPD	ZONE

FIRST ANGLE PROJECTION

(ALL DIMENSIONS ARE IN mm)

DRG. NO. 0-103-07-62012 SH. 01 OF 01

SECTION B-B

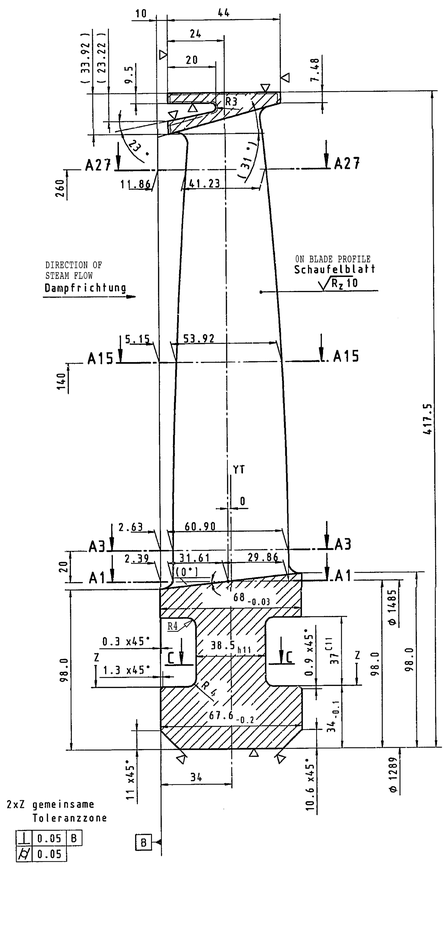

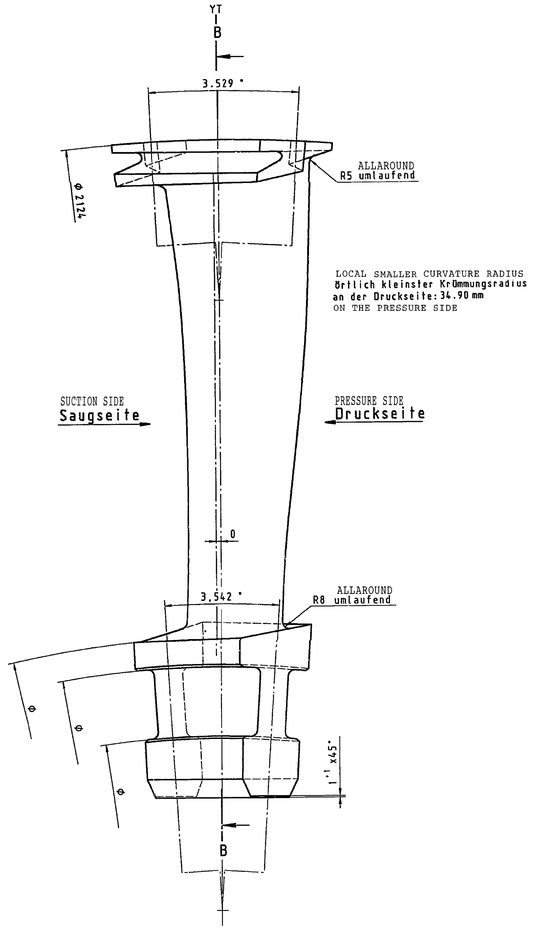

SECTION A27-A27

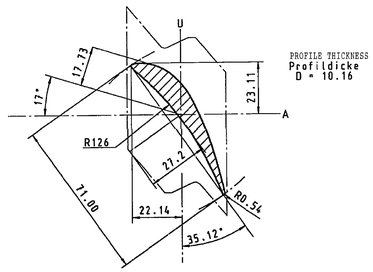

SECTION A15-A15

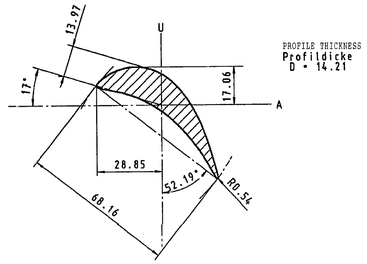

SECTION A3-A3

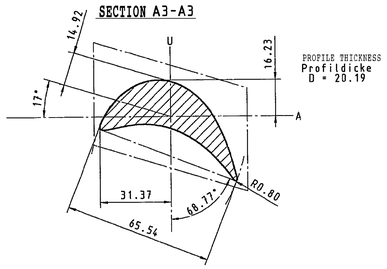

DIMENSIONS FOR DIE
Maßbild für die

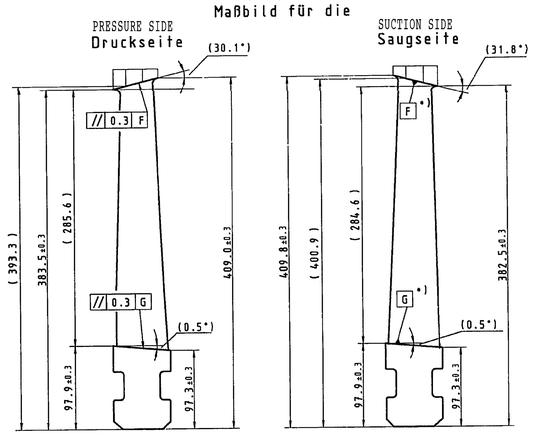

Rohteil in Zentrierlage
BLANK IN CENTER POSITION

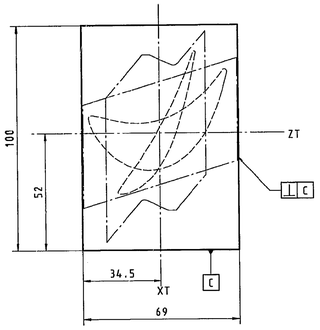

SECTION C-C

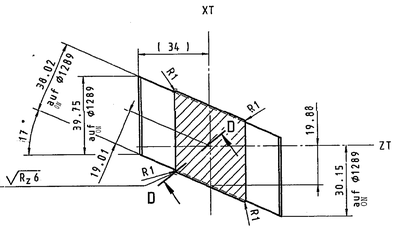

SECTION D-D

SECTION A1-A1

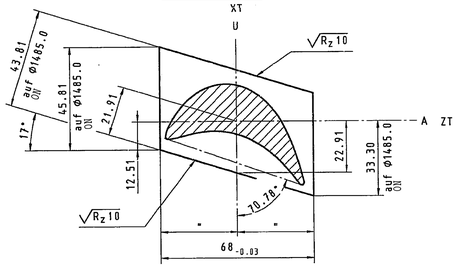

VIEW Z

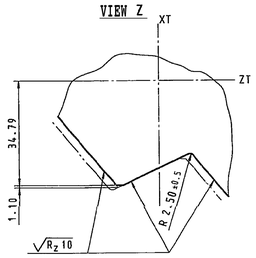

Alle Maße auf Ø2124 bezogen
ALL DIMENSIONS ARE RELATED ON Ø2124

TOLERANCES
Toleranzen

0.25	Profilform	PROFILE FORM
±0.25	Profildicke	PROFILE THICKNESS
±0.25	Profillänge	PROFILE LENGTH
±0.30	Profilwinkel	PROFILE ANGLE
±0.02	Teilung	PITCH

TAPER VALUES FOR JIG LENGTH = 1000mm
Konuswerte f. Vorrichtungsl. 1000 mm

			ROOT Fuß	SHROUD Deckpl.
BLADE POSITION	Schaufellage	Ex	9.031	—
TABLE INCLINATION	Tischneigung	Ey	59.086	—
MEASURED HEIGHT	Meßhöhe	Eh	37.959	—

Strak-Nr: 19114
Profilzeichnung: 7651-24606/010 bis /011
Nutzeichnung: 6661242
Schaufelstückzahl/Reihe: 102
(einschl. Schlußschaufel)

NOTES:

1. PROFILE CO-ORD. AS PER DRG. NO. 0-103-07-62009-00 (2 SH)
2. NUMBER OF PIECES PER ROW INCLUDING LOCK BLADE = 102

THE INFORMATION ON THIS DOCUMENT IS THE PROPERTY OF ... IT MUST NOT BE USED DIRECTLY OR INDIRECTLY IN ANY WAY DETRIMENTAL TO THE INTEREST OF THE COMPANY

SIGN. AND DATE | REF. DRG. NO 7651-24606 REV:A | COMPUTER FILE NAME 0103-07-62012-S00-S00.DWG

GENERAL DIMENSIONAL LIMITS, FITS & TOLERANCES AS PER HY0230261

	NAME	SIGN.	DATE	NO. OF VAR.
DRN.	SCS/TBP		23.5.2000	
CHD.	T.S.PRABHAKAR		23.5.2000	NA
APPD.	C.N.V.RAMANA		23.5.2000	

TYPE OF PRODUCT OR NAME OF CUSTOMER/PROJECT

DEPT. ITD | DEPT. CODE 615 | UNTOL. DIMS. CH. ±1/N/± | SCALE NTS | WEIGHT (KG) NA | REF. TO ASSY. DRG. NA | ITEM NO. NA | NO. OF ITEMS NA

TITLE LP MOVING BLADE-1L (F116-64/72-320-70.78°) (NEW 5.0Sqm)

CAPD CODE N.A. | DRAWING NO. 0-103-07-62012 | REV. 00 | SHT. No 01 | NO. OF SHT. 01

-00 VAR

REV.	DATE	ALTERED CHD/APPD	ZONE

FIRST ANGLE PROJECTION

(ALL DIMENSIONS ARE IN mm)

DRG. NO. 0-303-21-00006 SH. 01 OF 01

POS. NO. 1

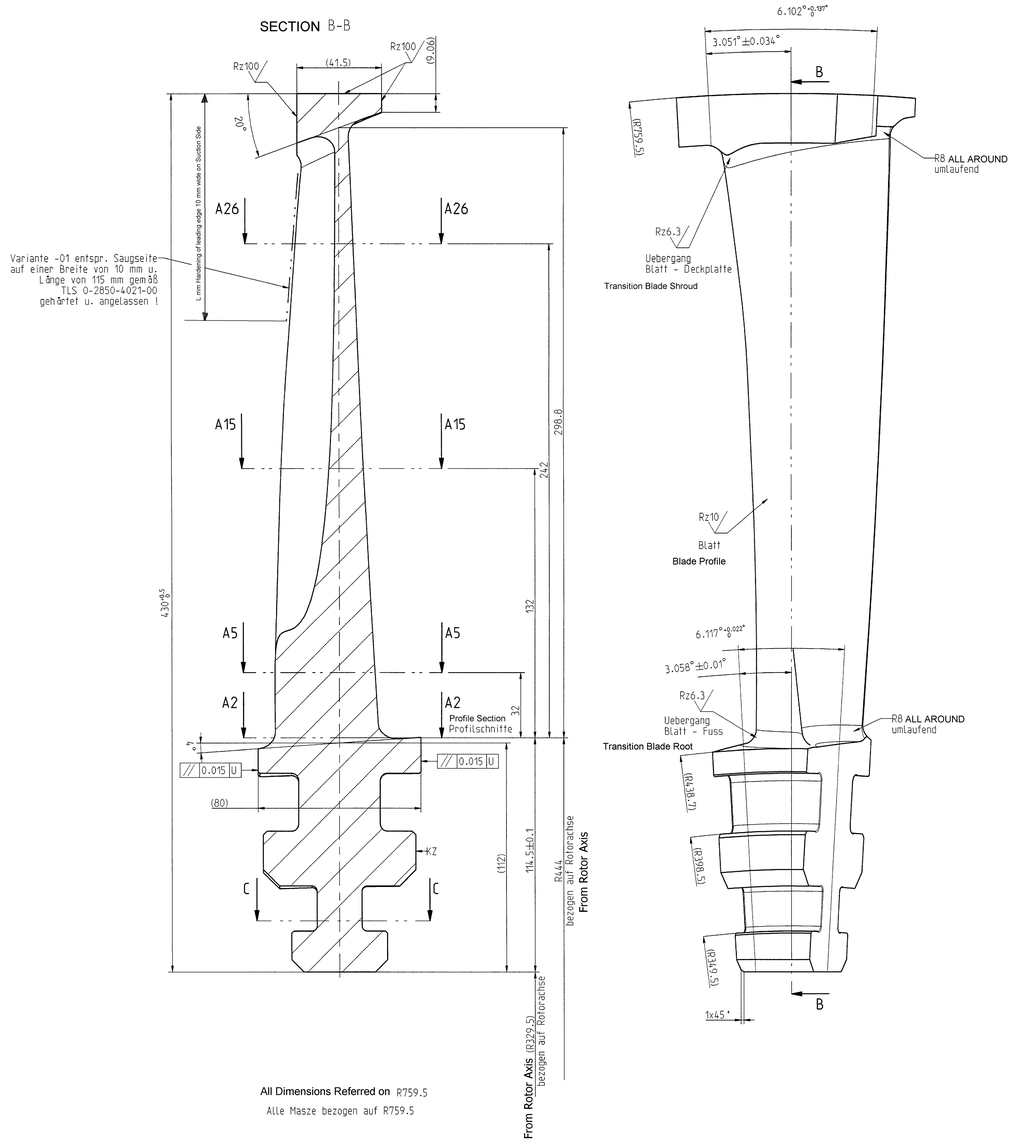

All Dimensions Referred on R759.5

Alle Masze bezogen auf R759.5

SCHEME OF DIMENSIONS

Stroemungskanal

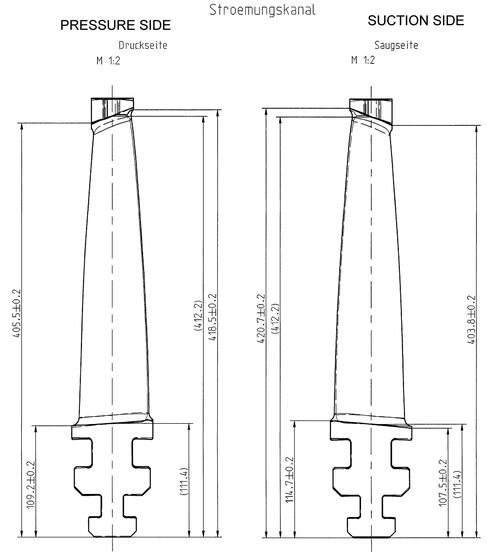

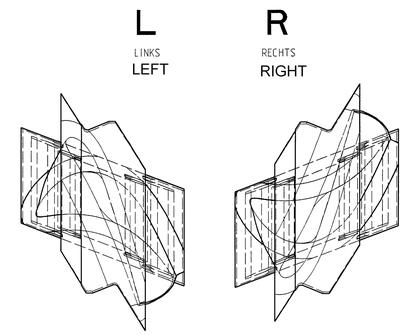

POS. NO. 2

Endschaufeln **LOCK BLADE**

fehlende Maße Endschaufel
siehe Laufschaufel

Sachnummer	Drehrichtung	Kantenhaertung
4-4920-2212-00	LINKS	ohne
4-4920-2212-01	LINKS	mit
4-4920-2202-00	RECHTS	ohne
4-4920-2202-01	RECHTS	mit

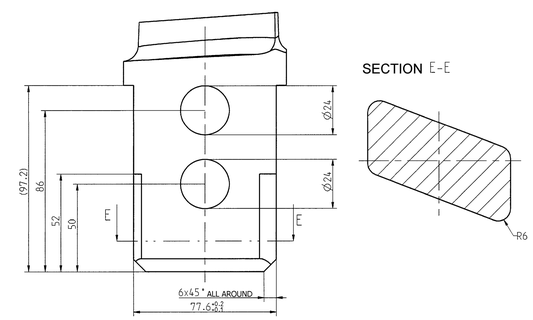

PROFILE TOLERANCE FOR THE

Profiltoleranzen

für die Prüfschnitte A5, A15, A26

CHECKING SECTIONS A5, A15, A26

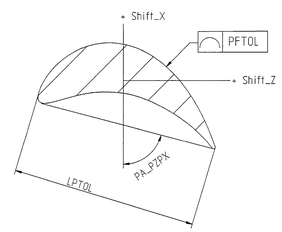

PFTOL	0.25
Shift_X	+0.50 -0.25
Shift_Z	+0.5 -0.25
PA_PZPX	±0.25
LPTOL	+0.25 -0.50

NOTES:

1. Profile co-ordinates as per drawing No:0-303-21-00007
2. Root and Groove As per drawing No:3-303-21-00061
3. Final Machining As per Blading Plan
4. Profile Checking Sections: A5, A15, A26.
5. Total No. of Blades including Lock Blade: 59 Pieces.
6. MIssing Dimensions of Pos No. 2 to be seen in Pos No.1

SECTION C-C

Alle Masze bezogen auf R329.5

All Dimensions Referred on R329.5

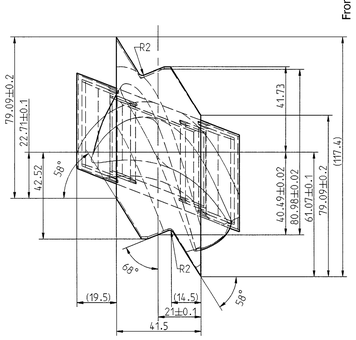

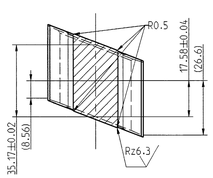

SECTION A2-A2

Alle Masze bezogen auf R444

All Dimensions Referred on R444

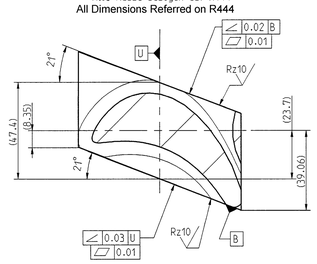

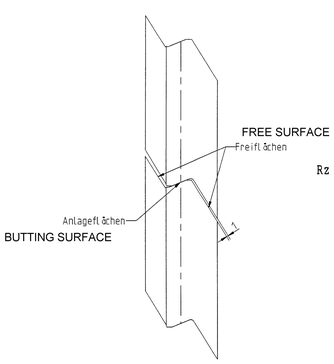

Rz 16 = 0.8 (Rz 6.3 = 0.4 Rz 10 = 0.8 Rz 100 = 12.5)

L	Pos No	Description	VAR
0	2	Lock Blade -Right	03
0	1	Normal Blade -Right	02
0	2	Lock Blade -Left	01
0	1	Normal Blade- Left	00

TYPE OF PRODUCT OR NAME OF CUSTOMER/PROJECT

	NAME	SIGN.	DATE	NO.OF VAR.
DRN.	Harish		02.06.05	NA
CHD.	T.S.Prabhakar		02.06.05	
APPD.	C.N.V.Ramana		02.06.05	

DEPT. ITD DEPT. CODE 415 | UNTOL. DIMS. CR. ±1/M/f | SCALE NTS | WEIGHT (KG) 3.8 | REF. TO ASSY. DRG. NA | ITEM NO. NA | NO.OF ITEMS NA

TITLE **L P MOVING BLADE-2 (SL 2.2 SQM)** | CARD CODE N.A. | DRAWING NO. 0-303-21-00006 | REV. 00 | SHT. No 01 | NO. OF SHT. 01

REV. | DATE | ALTERED | CHD/APPD | ZONE

SIGN AND DATE | SIZE AND NO. A0-2-128-2202-00 REV-4. | COMPUTER FILE NAME | INVENTOR NO

GENERAL DIMENSIONAL LIMITS,FITS & TOLERANCES AS PER HY0230261

THE INFORMATION ON THIS DOCUMENT IS THE PROPERTY OF IT MUST NOT BE USED DIRECTLY OR INDIRECTLY IN ANY WAY DETRIMENTAL TO THE INTEREST OF THE COMPANY

THIRD ANGLE PROJECTION

(ALL DIMENSIONS ARE IN mm)

DRG. NO 0-35129-91001 SH.01 OF 02

NOTES:

1. FOR APPLICABLE DRAWING NOTES SEE ITEM 2.

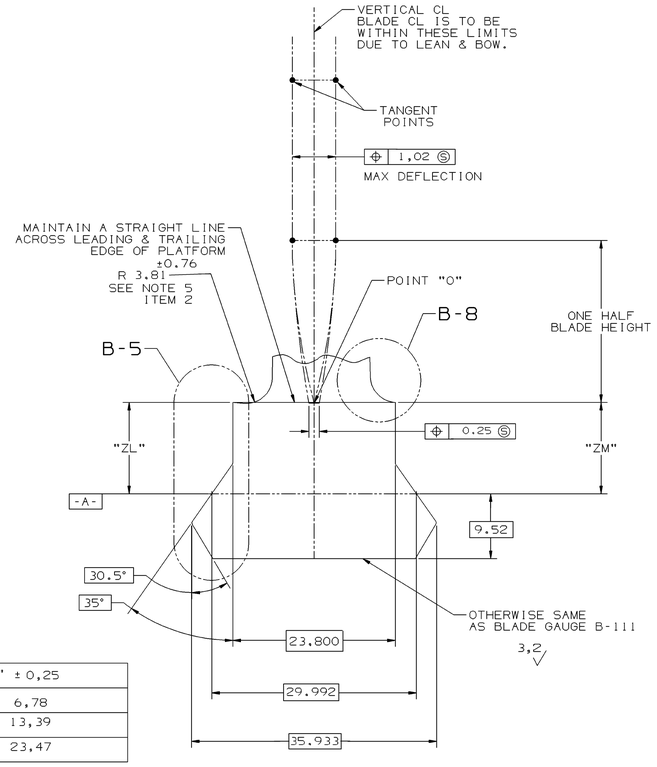

SECTION	"ZL" ±0,25	"ZM" ± 0,25
BA-BA	7,62	6,78
BB-BB	13,39	13,39
BC-BC	22,33	23,47

SEE NOTE 6 OF ITEM 2

SECTION BA-BA, BB-BB AND BC-BC [F-3 AND G-3]

(ROTATED 125.33° CCW)
(ENLARGED)

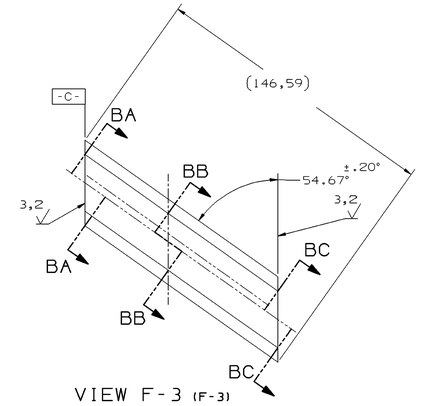

VIEW F-3 (F-3)

(AIRFOIL REMOVED FOR CLARITY)

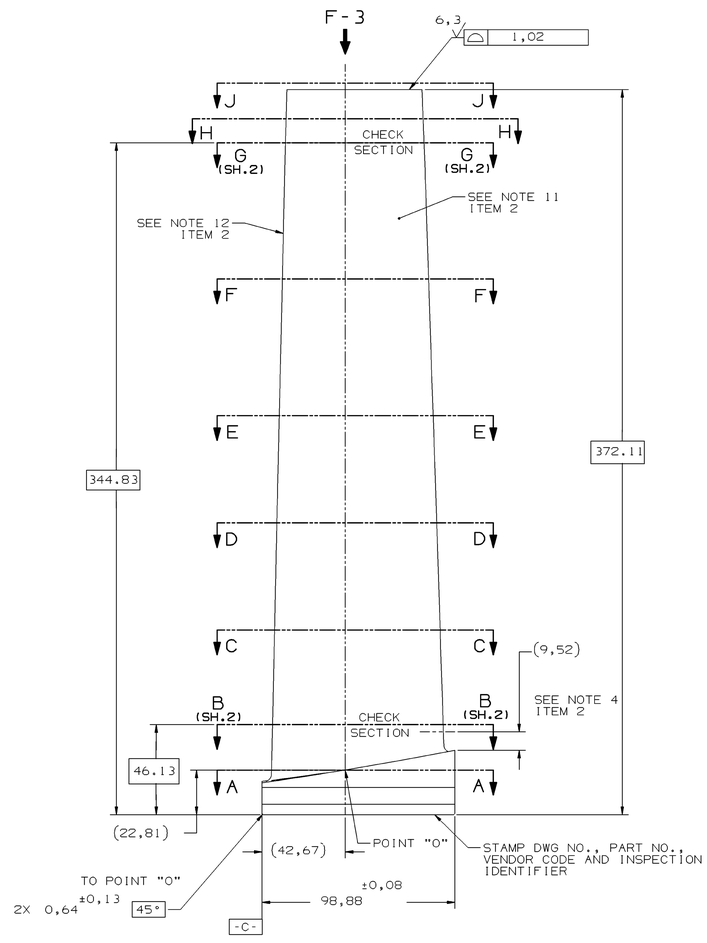

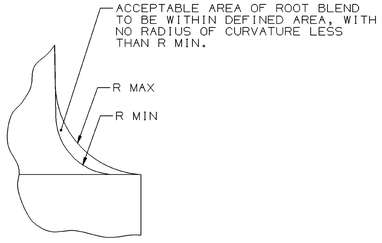

DETAIL B-8 (G-5)

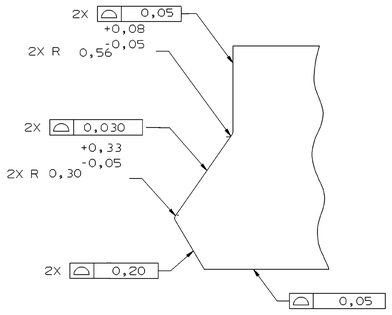

DETAIL B-5 (F-6)

01	As shown	
VAR	Desc.	

MATING PART REFERENCE DATA	
POINT 'O' Ø	2114,04
CONE ANGLE	8.800
DOVETAIL ANGLE	54.667

5	ACPT REQT BLADES & VANES	P29A-AG900	GT10128
4	COMPR VANES PROCESSING	P3C-A060	GT10083
3	X-Y COORDS	287A7832	GT10693
2	APPLICABLE DWG NOTES	314A5112	GT10459
1	APLD PRAC, GENL MACH	348A9200	GT10582
	NOMENCLATURE	IDENT	BHELSPEC
	LIST OF COMPLEMENTARY DOCUMENTS		

C	H-3	1
B	G-8	2
A	F-6	1
DATUM	ZONE	SHEET

THIRD ANGLE PROJECTION

GENERAL DIMENSIONAL LIMITS,FITS & TOLERANCES AS PER HY0230261

THE INFORMATION ON THIS DOCUMENT IS THE PROPERTY OF IT MUST NOT BE USED DIRECTLY OR INDIRECTLY IN ANY WAY DETRIMENTAL TO THE INTEREST OF THE COMPANY

COMPUTER FILE NAME 0350129-001-002.TIF

REF. DRG. NO. 1086104-REV.D

SIGN. AND DATE

INVENTORY NO

REV.	DATE	ALTERED CHD/APPD	ZONE

TYPE OF PRODUCT OR

NAME OF CUSTOMER/PROJECT

	NAME	SIGN.	DATE	NO.OF VAR.
DRN.	SCS		06-12-06	
CHD.	AJAY		06-12-06	NA
APPD.	S.SRIRAM		06-12-06	

DEPT.	UNTOL. DIMS.		SCALE	WEIGHT (KG)	REF. TO ASSY. DRG.	ITEM NO.	NO.OF ITEMS
GTD CODE 423	GR. 6/N/f		NTS	2.3	109ES104	NA	NA

TITLE: VANE STATOR STG 1

CARD CODE

DRAWING NO. 0-35129-91001

REV. 00

SHT. No 01 NO OF SHT. 02

THIRD ANGLE PROJECTION

(ALL DIMENSIONS ARE IN mm)

DRG. NO 0-35129-91001 SH. 02 OF 02

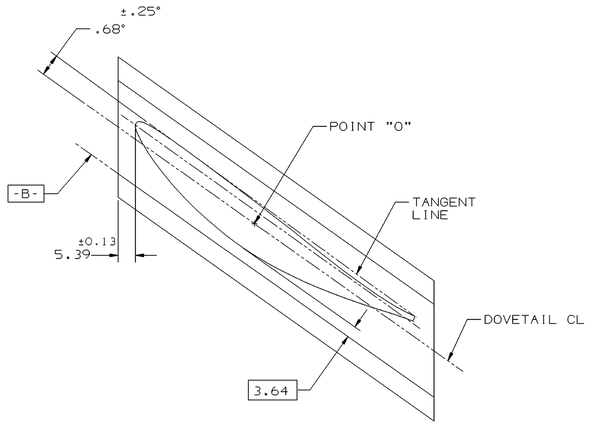

SECTION B-B (B-2 SH.1)

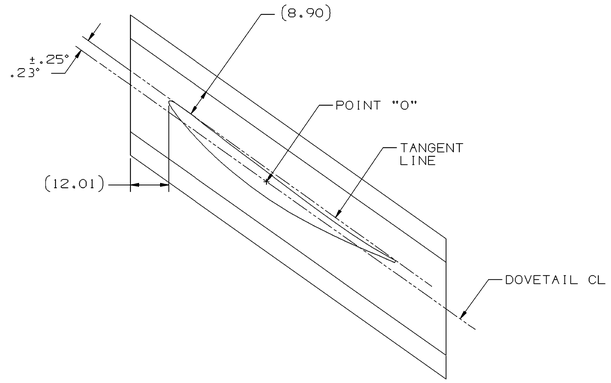

SECTION G-G (E-2 SH.1)

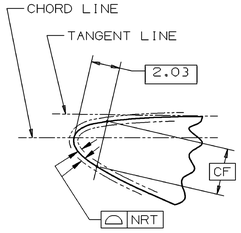

DETAIL B-8 (c-6)
(LEADING EDGE)

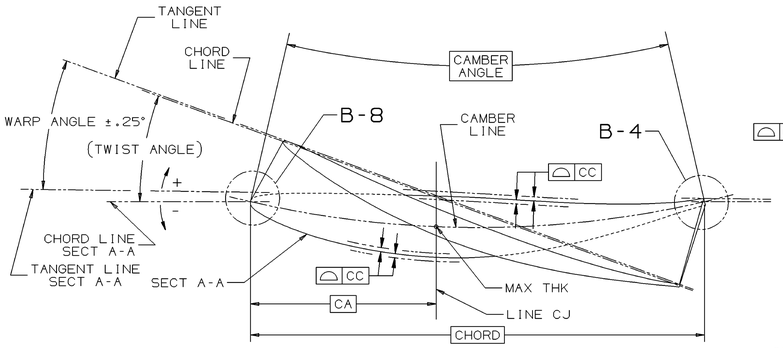

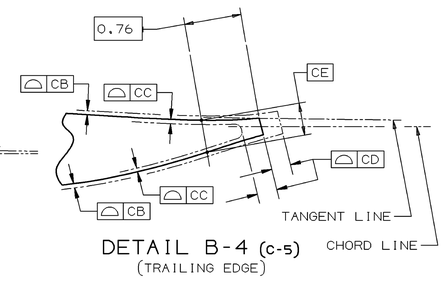

DETAIL B-4 (c-5)
(TRAILING EDGE)

SEE NOTES 9 AND 10, ITEM 2

SECTION	SECTION HEIGHT FROM POINT "O"	CHORD	PERCENT THICKNESS	CAMBER ANGLE	TWIST ANGLE	WARP ANGLE ±.25	THICKNESS AT "CA"	CA	CB	CC	CD	CE	CF	NRT
A-A	0.000	107.950	13.5000	25.8500	.0000	.0000	14.562	43.180	0.122	0.244	1.080	1.707	3.871	0.135
B-B	23.317	106.350	13.0570	25.4000	.0500	.1050	13.876	42.540	0.117	0.231	1.064	1.628	3.713	0.124
C-C	72.085	103.175	12.1710	24.5000	.1000	.2650	12.548	41.270	0.104	0.208	1.031	1.476	3.404	0.104
D-D	126.949	99.593	11.1750	23.4000	.2000	.4670	11.120	39.837	0.094	0.185	0.996	1.311	3.066	0,086
E-E	181.813	96.012	10.1780	22.4000	.1500	.5160	9.764	38.405	0.081	0.163	0.960	1.153	2.738	0.076
F-F	251.917	91.440	8.9050	21.0500	.0500	.5250	8.136	36,576	0.069	0.135	0.914	0.963	2,332	0.076
G-G	322.021	86.843	7.6320	19.7500	.0200	.5510	6.622	34.737	0.056	0.109	0.869	0.787	1.943	0.076
H-H	334.213	86.055	7.4100	19.5000	.2500	.3350	6.373	34.422	0.053	0,107	0.861	0.757	1.877	0.076
J-J	352.501	84.836	7.1000	19.1000	.3500	.2530	6.020	33.934	0.051	0.102	0.848	0.716	1.783	0.076

THE INFORMATION ON THIS DOCUMENT IS THE PROPERTY OF
NOT BE USED DIRECTLY OR INDIRECTLY IN ANY WAY DETRIMENTAL TO THE INTEREST OF THE COMPANY
IT MUST

GENERAL DIMENSIONAL LIMITS,FITS & TOLERANCES AS PER HY0230261

REF. DRG. NO 109E5104 REV C
COMPUTER FILE NAME 0351291001-SH2.NXT.TIF
SIGN. AND DATE
INVENTORY NO

REV.	DATE	ALTERED CHD/APPD	REV.	DATE	ALTERED CHD/APPD	REV.	DATE	ALTERED CHD/APPD	REV.	DATE	ALTERED CHD/APPD	REV.	DATE	ALTERED CHD/APPD	REV.	DATE	ALTERED CHD/APPD	REV.	DATE	ALTERED CHD/APPD	REV.	DATE	ALTERED CHD/APPD	REV.	DATE	ALTERED CHD/APPD	REV.	DATE	ALTERED CHD/APPD	REV.	DATE	ALTERED - CHD/APPD -
ZONE			ZONE			ZONE			ZONE			ZONE			ZONE			ZONE			ZONE			ZONE			ZONE			ZONE		

TYPE OF PRODUCT OR
NAME OF CUSTOMER/PROJECT

	NAME	SIGN.	DATE	NO.OF VAR.
DRN.	SCS		06-12-06	NA
CHD.	AJAY	TT	06-12-06	
APPD.	S.SRIRAM	S.Sriram	06-12-06	

DEPT. GTD CODE 423 | UNTOL. DIMS. GR. B/M/F | SCALE NTS | WEIGHT (KG) 2.3 | REF. TO ASSY. DRG. 109E5104 | ITEM NO. NA | NO.OF ITEMS NA

TITLE: VANE STATOR STG-1

CARD CODE | DRAWING NO. 0-35129-91001 | REV. 00

SHT. No 02 | NO OF SHT. 02

THIRD ANGLE PROJECTION

(ALL DIMENSIONS ARE IN mm)

SH. 01 OF 01 DRG. NO 0-35129-91009

NOTES:

1. FOR APPLICABLE DRAWING NOTES SEE ITEM 2.

DRAWING		PRECISION MASTER	
PT NO	REV	DWG NO	REV
1-9, 102-103	C	217X237	—

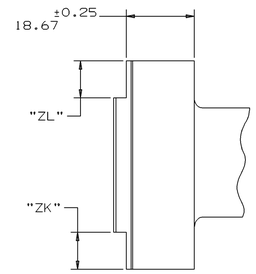

VIEW G-5 (G-4)

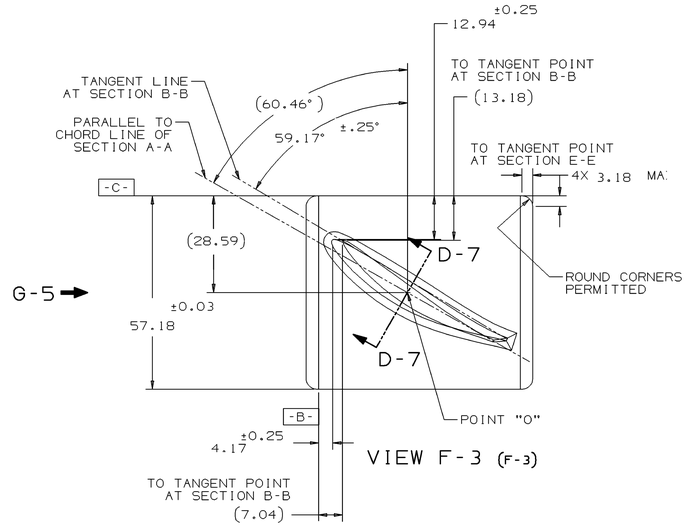

VIEW F-3 (F-3)

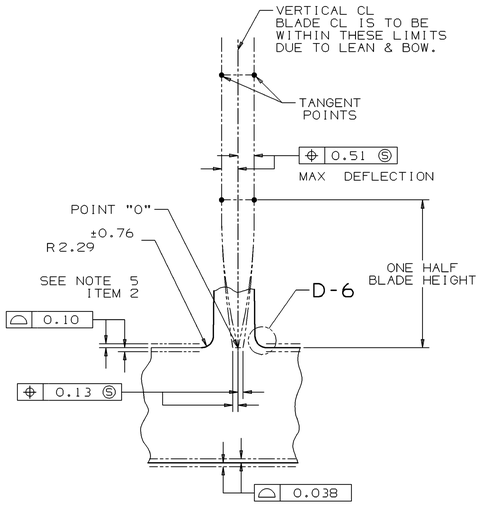

SECTION D-7 (G-3)

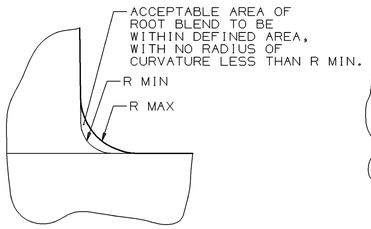

DETAIL D-6 (E-7)

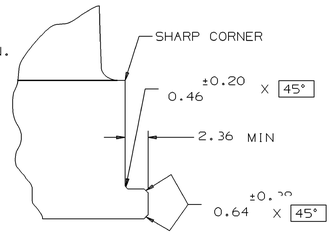

DETAIL D-5 (C-2)
(APPLIES TO BOTH SIDES OF BASE)

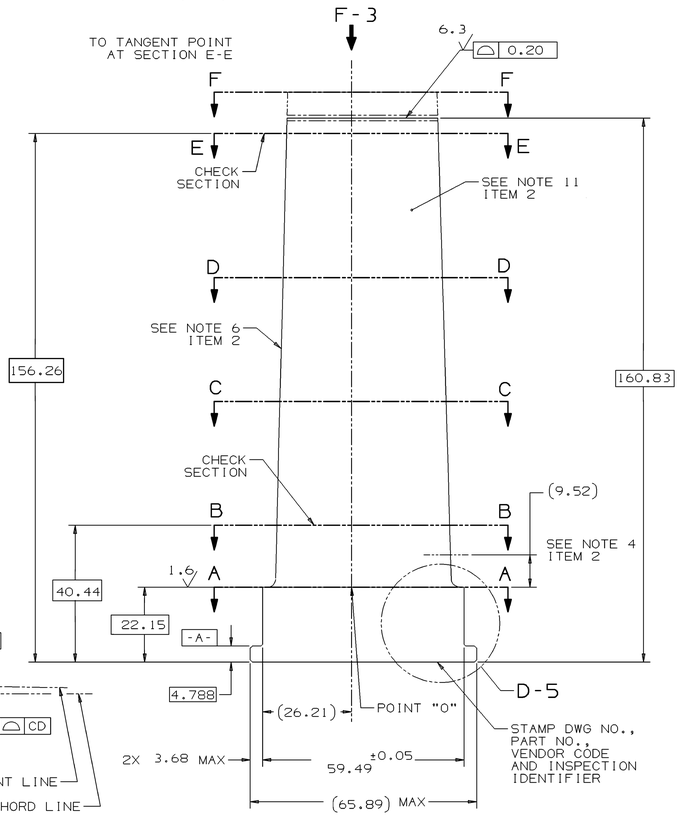

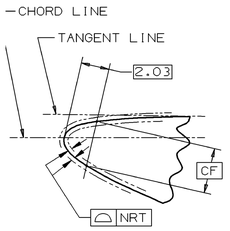

DETAIL B-8 (C-6)
(LEADING EDGE)

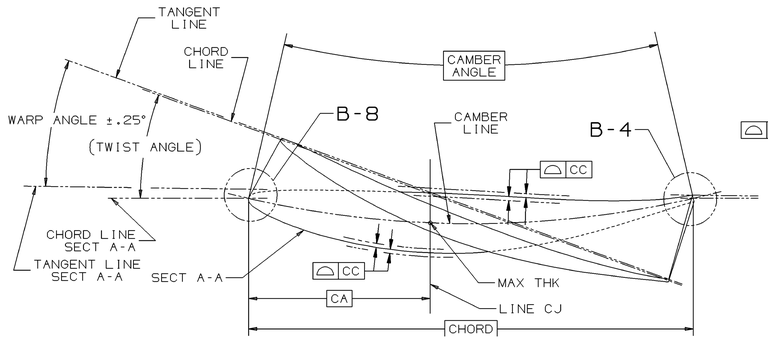

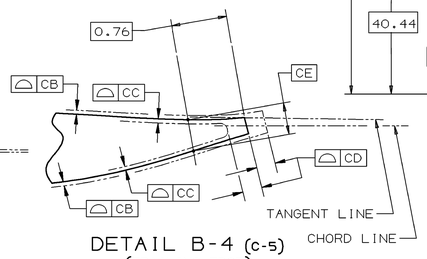

DETAIL B-4 (C-5)
(TRAILING EDGE)

SEE NOTES 9 & 10, ITEM 2

SECTION	SECTION HEIGHT FROM POINT "O"	CHORD	PERCENT THICKNESS	CAMBER ANGLE	TWIST ANGLE	WARP ANGLE ±.25	THICKNESS AT "CA"	CA	CB	CC	CD	CE	CF	NRT
A-A	0,000	59,436	342,900	24.6000	.0000	.0000	8,019	23,774	0,066	0,135	0,594	0,980	2,784	0,076
B-B	18,288	58,623	331,343	24.6000	.5000	.3840	7,643	23,449	0,064	0,127	0,587	0,935	2,672	0,076
C-C	54,864	57,023	308,204	24.6000	1.5500	1.2410	6,914	22,809	0,058	0,114	0,569	0,848	2,449	0,076
D-D	91,440	55,397	285,064	24.6000	2.7000	2.2480	6,213	22,159	0,051	0,104	0,554	0,765	2,233	0,076
E-E	134,112	53,518	258,064	24.6000	4.0500	3.4590	5,433	21,407	0,046	0,091	0,536	0,671	1,984	0,076
F-F	146,304	52,984	250,368	24.6000	4.4500	3.8270	5,220	21,194	0,043	0,086	0,531	0,645	1,915	0,076

03	P103	OMIT	11.91
02	P102	11.91	OMIT
01	P001	OMIT	OMIT
VAR	GE PT. NO.	ZK±0.13	ZL±0.13

MATING PART REFERENCE DATA	
POINT 'O' Ø	1893.42
CONE ANGLE	.000

7	COATING, ALUMINUM INORGANIC	P16A-AG3	
6	COATING, ALUMINUM INORGANIC	P16A-AG5	
5	ACPT REQT BLADES & VANES	P29A-AG900	GT10128
4	COMPR VANES PROCESSING	P3C-AG60	GT10083
3	X-Y COORDS	287A7837	GT10698
2	APPLICABLE DWG NOTES	314A5112	GT10459
1	APLD PRAC, GENL MACH	348A9200	GT10582
	NOMENCLATURE	IDENT	BHELSPEC
	LIST OF COMPLEMENTARY DOCUMENTS		

C	H-3	1
B	G-8	2
A	F-6	1
DATUM	ZONE	SHEET

THIRD ANGLE PROJECTION

GENERAL DIMENSIONAL LIMITS,FITS & TOLERANCES AS PER HY0230261

COMPUTER FILE NAME 0-35129-91009-SBOM00.TIF

REF. DRG. NO. 109E5112 REV C

SIGN. AND DATE

INVENTORY NO

THE INFORMATION ON THIS DOCUMENT IS NOT BE USED DIRECTLY OR INDIRECTLY IN ANY WAY DETRIMENTAL TO THE INTEREST OF THE COMPANY MUST

REV.	DATE	ALTERED CHD/APPD	ZONE

TYPE OF PRODUCT OR

NAME OF CUSTOMER/PROJECT

	NAME	SIGN.	DATE	NO.OF VAR.
DRN.	SCS		06-12-06	
CHD.	AJAY		06-12-06	NA
APPD.	S.SRIRAM		06-12-06	

DEPT. CODE	GTD 423	UNTOL. DIMS. CR.	SCALE NTS	WEIGHT (KG) 0.86	REF. TO ASSY. DRG. 109E5112	ITEM NO. NA	NO.OF ITEMS NA
TITLE VANE STATOR STG 9				CARD CODE	DRAWING NO. 0-35129-91009		REV. 00
					SHT. No 01	NO OF SHT. 01	

THIRD ANGLE PROJECTION

(ALL DIMENSIONS ARE IN mm)

DRG. NO. 0-353-05-91001 SH. 1 OF 1

DRAWING		PRECISION MASTER	
PT NO	REV	DWG NO	REV
1	–	217X239	–

NOTES:

1. FOR APPLICABLE DRAWING NOTES SEE ITEM 2.

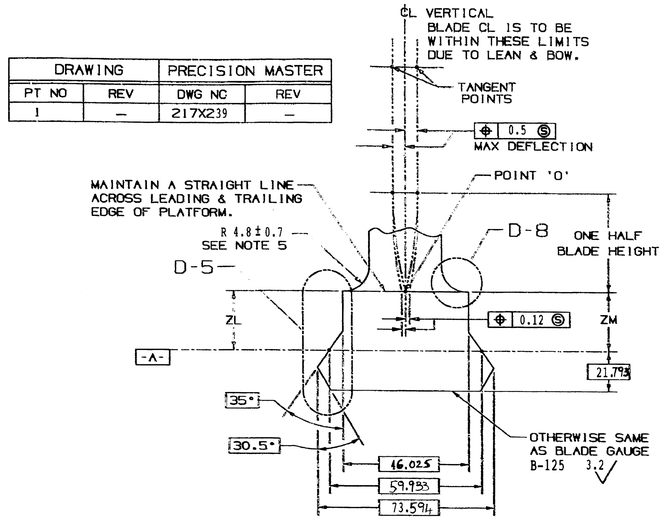

SECTIONS BA-BA, BB-BB & BC-BC (G-3)

SEE NOTE 6

SECTION	ZL ± 0.2	ZM ± 0.2
BA-BA	15.6	17.4
BB-BB	17.1	17.1
BC-BC	17.4	15.6

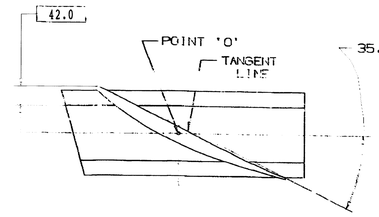

SECTION F-F (E-3)

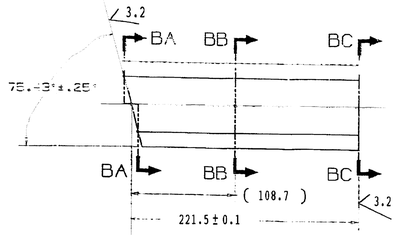

VIEW G-3 (F-3)
(AIRFOIL DELETED FOR CLARITY)

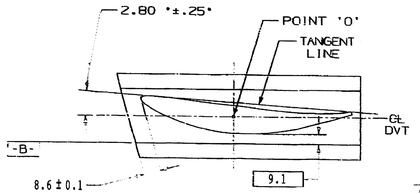

SECTION B-B (D-3)

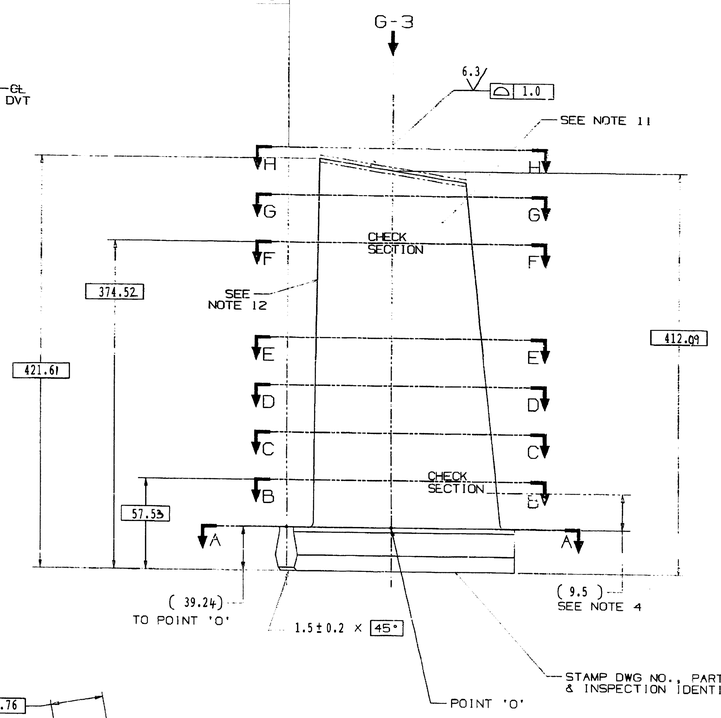

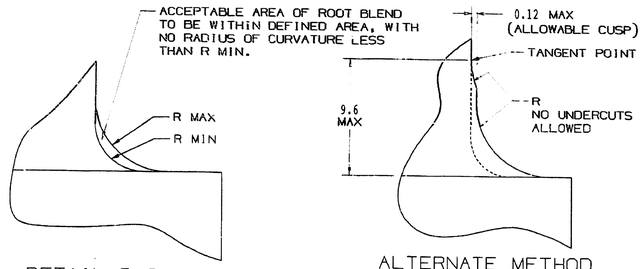

DETAIL D-8 (G-7)

ALTERNATE METHOD OF MANUFACTURE
(REFER TO DETAIL D-8)

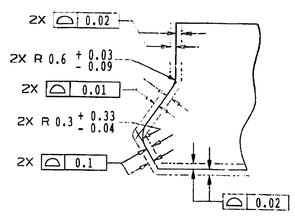

DETAIL D-5 (G-7)

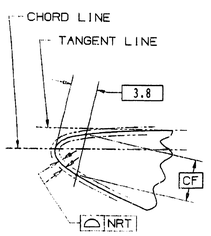

DETAIL B-8 (C-6)
(LEADING EDGE)

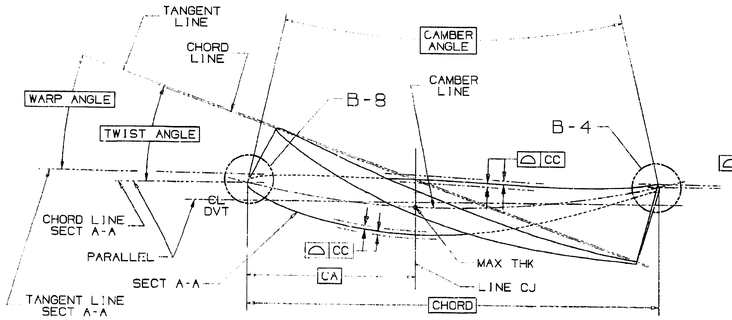

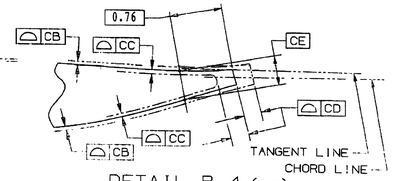

DETAIL B-4 (C-5)
(TRAILING EDGE)

SEE NOTES 9 & 10

SECTION	SECTION HEIGHT	CHORD	PERCENT THICKNESS	CAMBER ANGLE	TWIST ANGLE	WARP ANGLE	THICKNESS AT 'CA'	CA	CB	CC	CD	CE	CF	NRT
A-A	000.0	210.74	13.500	32.000	.000	N/A	28.45	105.372	0.24	0.48	1.05	3.56	4.98	0.20
B-B	018.28	210.74	13.004	30.450	2.800	N/A	27.40	105.372	0.23	0.46	1.05	3.41	4.8	0.19
C-C	091.44	210.74	11.021	24.350	13.000	N/A	23.23	105.372	0.19	0.39	1.05	2.87	4.05	0.15
D-D	182.88	210.74	8.543	17.500	23.500	N/A	18.00	105.372	0.14	0.30	1.05	2.21	3.12	0.11
E-E	274.32	210.74	6.064	12.200	31.500	N/A	12.78	105.372	0.10	0.21	1.05	1.56	2.21	0.07
F-F	335.28	210.74	4.411	9.350	35.600	N/A	09.30	105.372	0.076	0.15	1.05	1.13	1.6	0.07
G-G	365.76	210.74	3.585	8.000	37.300	N/A	07.55	105.372	0.06	0.12	1.05	0.92	1.3	0.07
H-H	384.05	210.74	3.100	7.217	38.200	N/A	06.53	105.372	0.05	0.11	1.05	0.80	1.13	0.07

MATING PART REFERENCE DATA	
POINT 'O' Ø	1417.68
RIM ANGLE	.000
DOVETAIL ANGLE	75.433

5	ACPT REOT-BLADES & VANES	P29A-A6900	GT10128
4	COMPR VANES-PROCESSING	P3C-A660	GT10083
3	X-Y COORDS	287A7859	GT10653
2	APPLICABLE DWG NOTES	314A5112	GT10459
1	APPLIED PRACTICES	348A9200	HY230261
IT.	NOMENCLATURE	IDENT	BHEL SPEC
LIST OF COMPLEMENTARY DOCUMENTS			

THE INFORMATION ON THIS DOCUMENT IS THE PROPERTY OF MUST NOT BE USED DIRECTLY OR INDIRECTLY IN ANY WAY DETRIMENTAL TO THE INTEREST OF THE COMPANY

GENERAL DIMENSIONAL LIMITS,FITS & TOLERANCES AS PER HY230261

SIGN. AND DATE | REF. DWG. NO. 10995123 REV 'A' | COMPUTER FILE NAME 0353995101-SSR-SSR.prt

INVENTORY NO

TYPE OF PRODUCT OR NAME OF CUSTOMER/PROJECT

	NAME	SIGN.	DATE	NO. OF VAR.
DRN.	SCS		4.1.2000	NA
CHD.	SKR		4.1.2000	
APPD.	SSR		4.1.2000	

DEPT.	UNTOL. DIMS. OR	SCALE	WEIGHT (KG)	REF. TO ASSY. DRG.	ITEM NO.	NO. OF ITEMS
GTD CODE 423	E/N/I	NA	11.82	NA	NA	NA

TITLE: BLADE ROTOR STG 1

CARD CODE

DRAWING NO. 0-353-05-91001 REV. 00

SHT. No 1 NO OF SHT. 1

REV.	DATE	ALTERED CHD/APPD	ZONE

FIRST ANGLE PROJECTION

(ALL DIMENSIONS ARE IN mm)

DRG. NO. 1-101-02-62001 SH. 01 OF 01

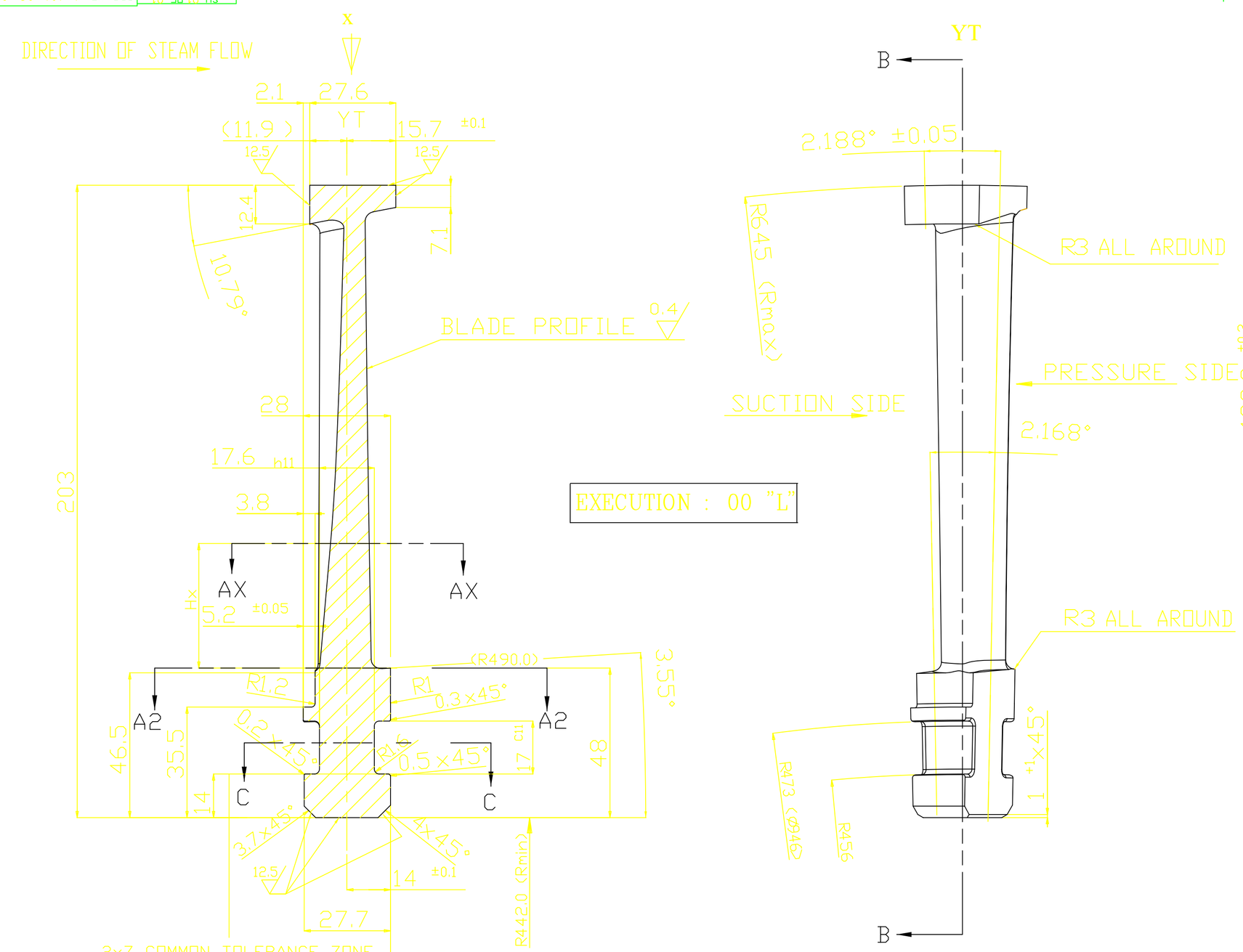

EXECUTION : 00 "L"

SECTION B-B

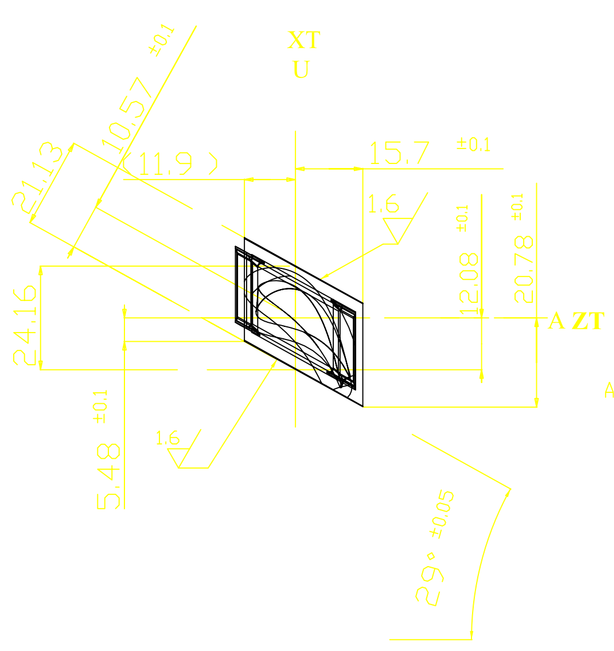

ALL DIMENSIONS REFERRED TO "Rmax"

VIEW X

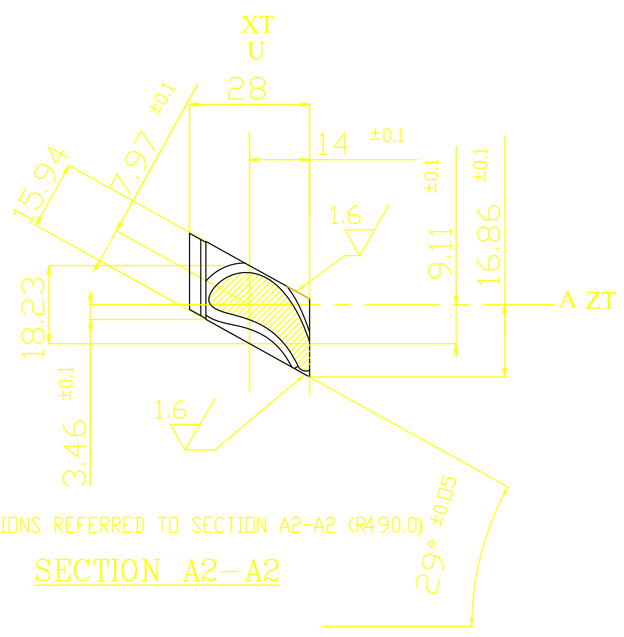

ALL DIMENSIONS REFERRED TO SECTION A2-A2 (R490.0)

SECTION A2-A2

SCHEME FOR S & D DIMENSIONS

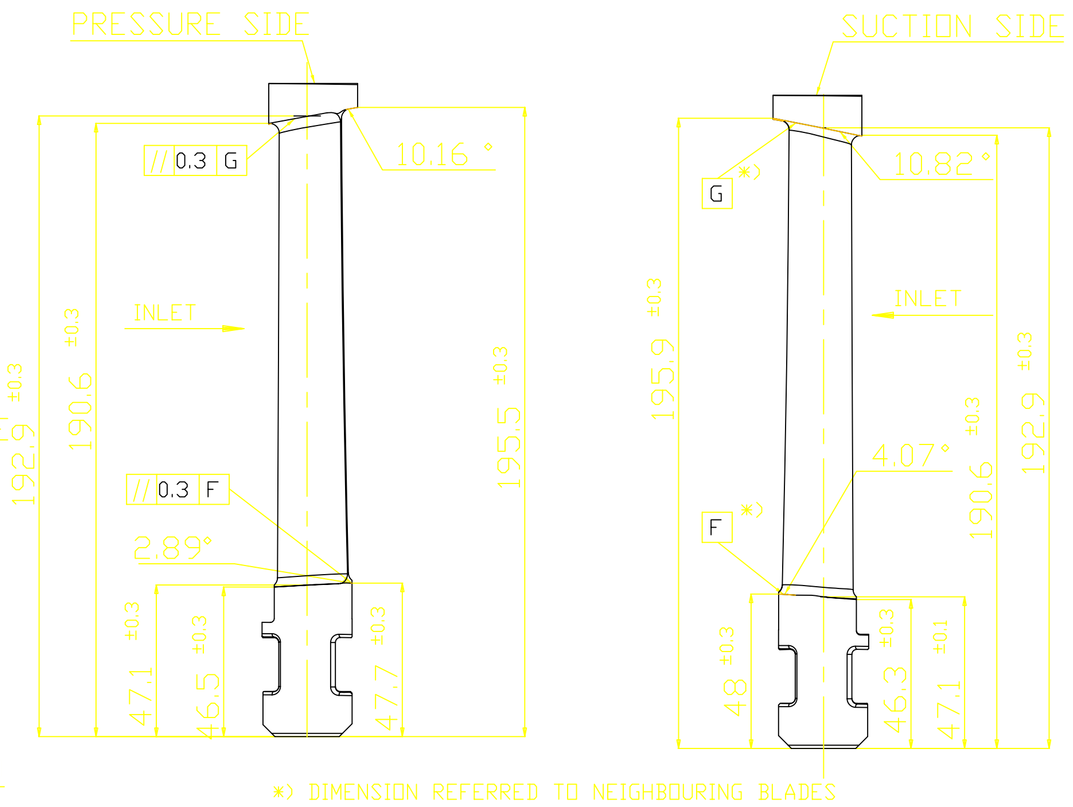

*) DIMENSION REFERRED TO NEIGHBOURING BLADES

EXECUTION : 00 "L"

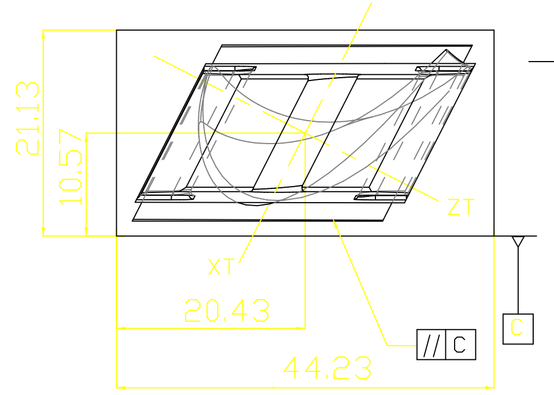

CENTRE DISTANCES IN SEMI FINISHED CONDITION

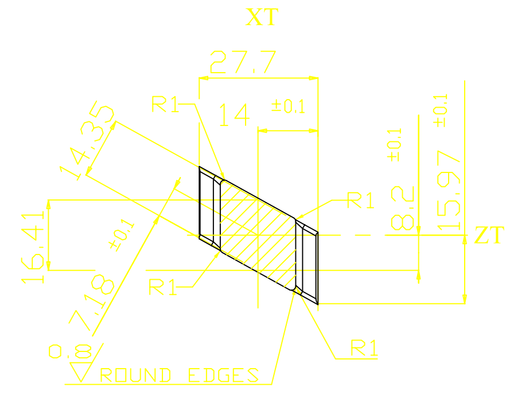

ALL DIMENSIONS REFERRED TO "Rmin"

SECTION C-C

TOLERENCES

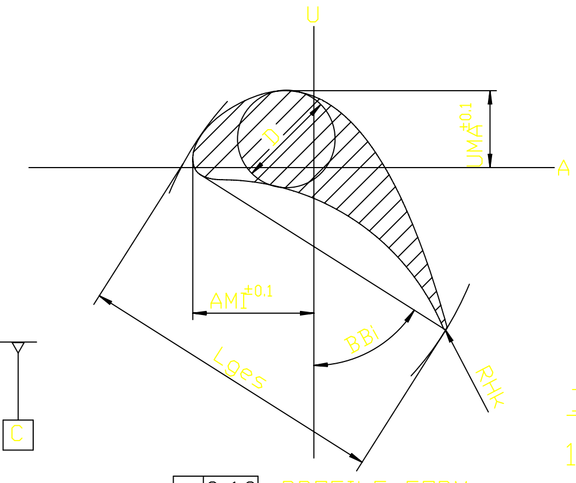

0.10 PROFILE FORM

± 0.10 PROFILE THICKNESS

± 0.30 PROFILE ANGLE

+0.04 −0.02 PITCH

SECTION AX	Hx	Lges	AMI	UMA	RHk	BBi	D
A1 - A1	-10.0	27.17	9.27	6.68	0.14	58.70	9.22
A2 - A2	0.0	27.20	9.20	6.75	0.14	57.20	9.03
A3 - A3	10.0	27.26	9.14	6.84	0.14	55.73	8.85
A9 - A9	70.0	28.18	8.88	7.64	0.15	47.64	7.80
A15 - A15	130.0	30.04	8.67	8.48	0.16	41.00	6.56

LOCAL SMALLEST RADIUS OF CURVATURE ON PRESSURE SIDE: 17.7 MM

EXECUTION : 00 "L"

L

"LEFT" AS SHOWN

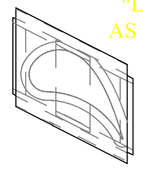

BLADE SEEN IN THE DIRECTION OF FLOW

EXECUTION : 01 "L"

LOCK BLADE

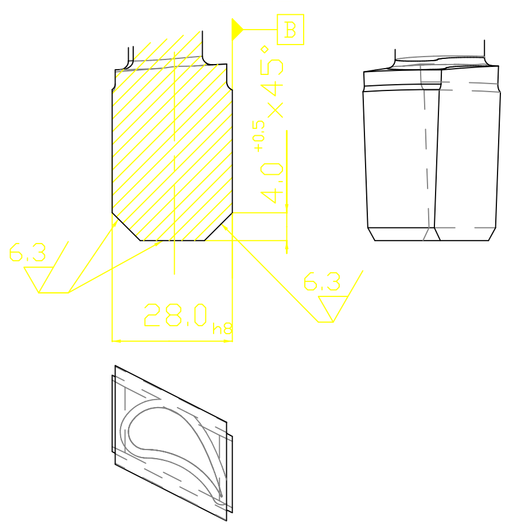

NOTES

1) PROFILE COORDINATES AS PER DRAWING NO.: 0-101-02-62001-00

0.4	1	01	01
0.358	171	00	00
WEIGHT (KG)	NO. OF BLADES	EXECUTION	VAR

TYPE OF PRODUCT OR NAME OF CUSTOMER/PROJECT: GIRAL 125 MW

BHARAT HEAVY ELECTRICALS LTD. HYDERABAD

	NAME	SIGN.	DATE	NO.OF VAR.
DRN.	MRR		18.06.04	
CHD.	TSP		18.06.04	-NA-
APPD.	C.V.N.R		18.06.04	

DEPT. CODE	I.T.D. 415	UNTOL. DIMS. GR. C/M/F		SCALE	WEIGHT (KG)	REF. TO ASSY. DRG.	ITEM NO.	NO.OF ITEMS
				NTS	-N.A.-	-NA-	-NA-	-NA-

TITLE: MOVING BLADE IP18L F-002-R26-TR203/157B2M

CARD CODE: -

DRAWING NO. L-101-02-62001 REV. 00

SHT. No 01 NO. OF SHT. 01

REV.	DATE	ALTERED CHD/APPD	REV.	DATE	ALTERED CHD/APPD	REV.	DATE	ALTERED CHD/APPD	REV.	DATE	ALTERED CHD/APPD	REV.	DATE	ALTERED CHD/APPD	REV.	DATE	ALTERED CHD/APPD	REV.	DATE	ALTERED CHD/APPD	REV.	DATE	ALTERED CHD/APPD	REV.	DATE	ALTERED CHD/APPD	REV.	DATE	ALTERED CHD/APPD	REV.	DATE
ZONE			ZONE			ZONE			ZONE			ZONE			ZONE			ZONE			ZONE			ZONE			ZONE			ZONE	

THE INFORMATION ON THIS DOCUMENT IS THE PROPERTY OF BHARAT HEAVY ELECTRICALS LIMITED. IT MUST NOT BE USED DIRECTLY OR INDIRECTLY IN ANY WAY DETRIMENTAL TO THE INTERE ST OF THE COMPAY

GENERAL DIMENSIONAL LIMITS,FITS & TO LERANCES AS PER HY02B0261

COMPUTER FILE NAME

REF. DRG. NO. LMF AL/ARG RMTEL/ARG

SIGN. AND DATE

INVENTORY NO

FIRST ANGLE PROJECTION

(ALL DIMENSIONS ARE IN mm)

SH. 01 OF 01 DRG. NO. 1-301-82-00002

POS : 1

SECTION B-B

EXECUTION: 02 "R"

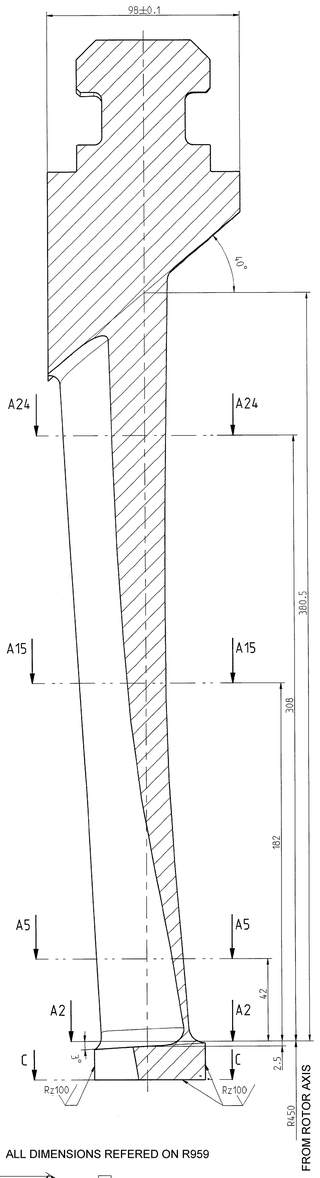

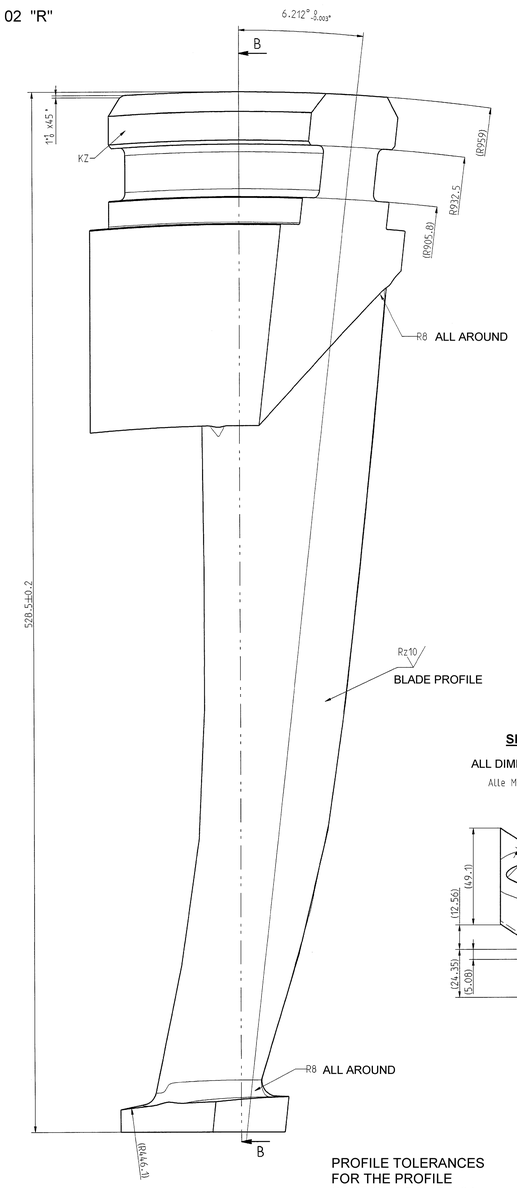

SCHEME OF DIMENSIONS

PRESSURE SIDE

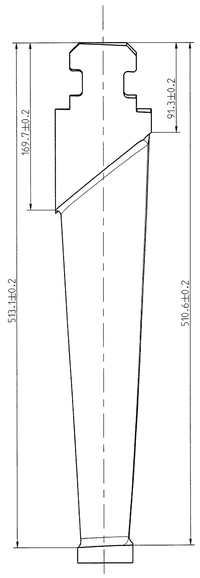

SUCTION SIDE

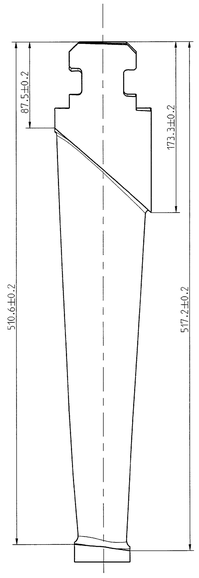

Rz16 = 0.8 (Rz10 = 0.8 Rz100 = 12.5)

L LINKS LEFT — EXECUTION: 00 "L"

R RECHTS RIGHT — EXECUTION: 02 "R"

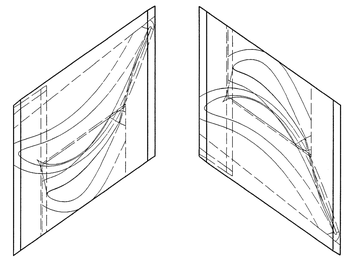

POS : 2

GUIDE BLADES AT JOINT PLANE(2PCS)
MADE BY REWORKING ON NORMAL GIUDE BLADE

EXECUTION: 01 "L"

EXECUTION: 03 "R"

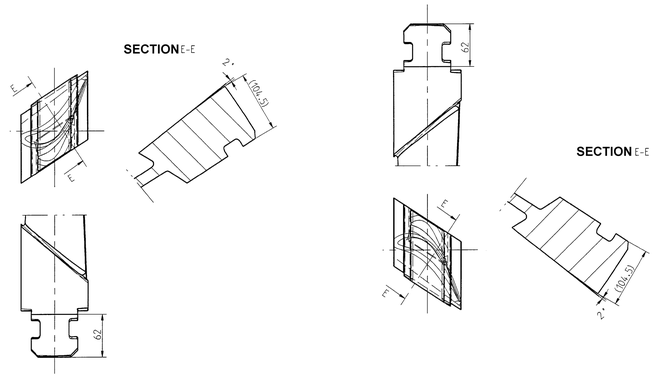

SECTION A2-A2

ALL DIMENSIONS REFERED ON R450

Alle Maße bezogen auf R450

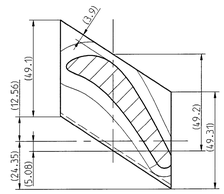

EY VALUE FOR 250mm SINE BAR LENGTH	
FOR LEFT VAR 00 &01	FOR RIGHT VAR 02 &03
EX=7.4245	EX=7.4361
EY=22.8596	EY=22.8596

BLADE ROOT DETAIL

Rz25 = 1.6 (Rz16 = 0.8)

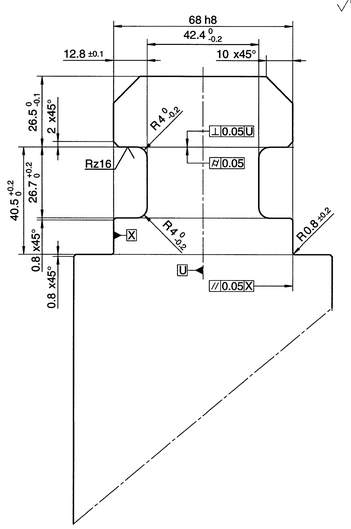

ALL DIMENSIONS REFERED ON R959

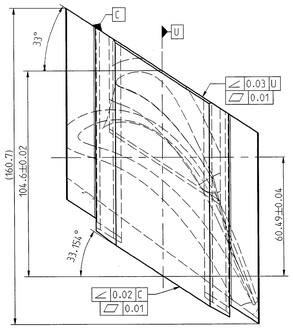

SECTION C-C

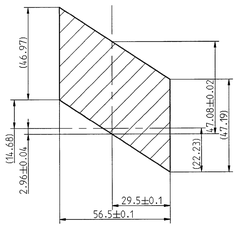

PROFILE TOLERANCES FOR THE PROFILE SECTION A5, A15, A24.

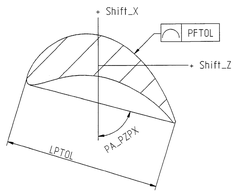

PFTOL	0.30
Shift_X	+0.60 -0.30
Shift_Z	+0.60 -0.30
PA_PZPX	±0.30°
LPTOL	+0.30 -0.60

NOTES:

1. Profile co-ordinates as per drawing No: 0-301-82-00001-00
2. Profile checking sections: A5, A15, A24.
3. Final Machining as per Blading Plan.
4. Total No. of Blades= 58.

FLAT 170X110 X20Cr13V HY10764	2	03	03
	56	02	02
	2	01	01
	56	00	00
Description	No. of Blades	Execution	Var

TYPE OF PRODUCT OR

NAME OF CUSTOMER/PROJECT

	NAME	SIGN	DATE	NO OF VAR
DRN	HARISH		14.06.05	NA
CHD	TS PRABHAKAR		14.06.05	
APPD	CNV RAMANA		14.06.05	

DEPT	UNTOL DIMS		SCALE	WEIGHT (KG)	REF TO ASSY DRG	ITEM NO	NO OF ITEMS
ITD CODE 415	GR ¢/M/f		NTS	10.6	NA	NA	NA

TITLE **LP GUIDE BLADE-3 (SL 2.2 SQM)**

CARD CODE

DRAWING NO. **1-301-82-00002** REV 00

SHT No 01 NO OF SHT 01

THE INFORMATION ON THIS DOCUMENT IS THE PROPERTY OF IT MUST NOT BE USED DIRECTLY OR INDIRECTLY IN ANY WAY DETRIMENTAL TO THE INTEREST OF THE COMPANY

GENERAL DIMENSIONAL LIMITS, FITS & TOLERANCES AS PER HY02230261

INVENTORY NO | SIGN AND DATE | REF | DRG NO 0-2118-2203-10 | COMPUTER FILE NAME

FIRST ANGLE PROJECTION

(ALL DIMENSIONS ARE IN mm)

SH. 01 OF 01 DRG. NO. 1-303-19-00019

Pos No. 1

SECTION B-B

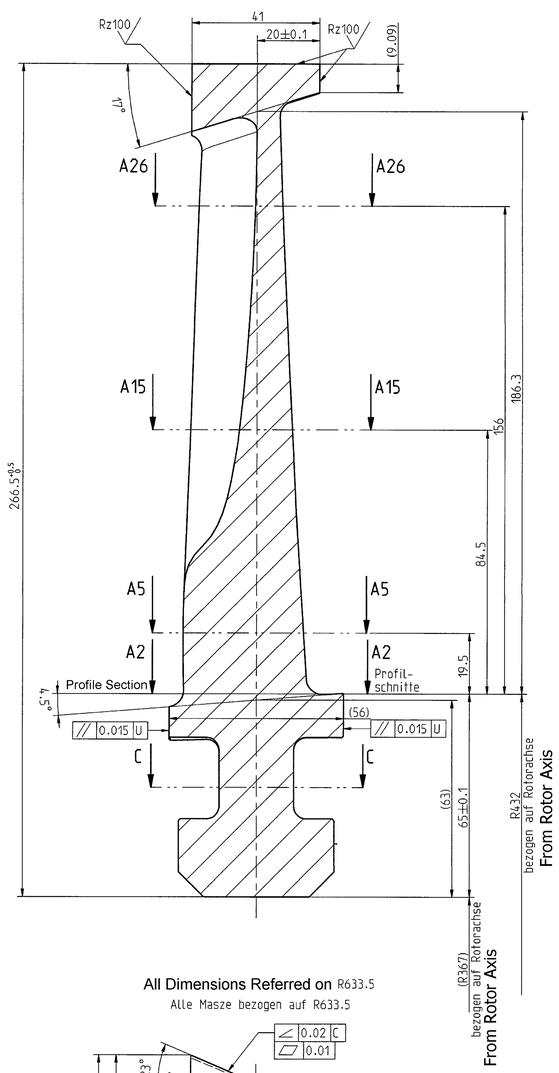

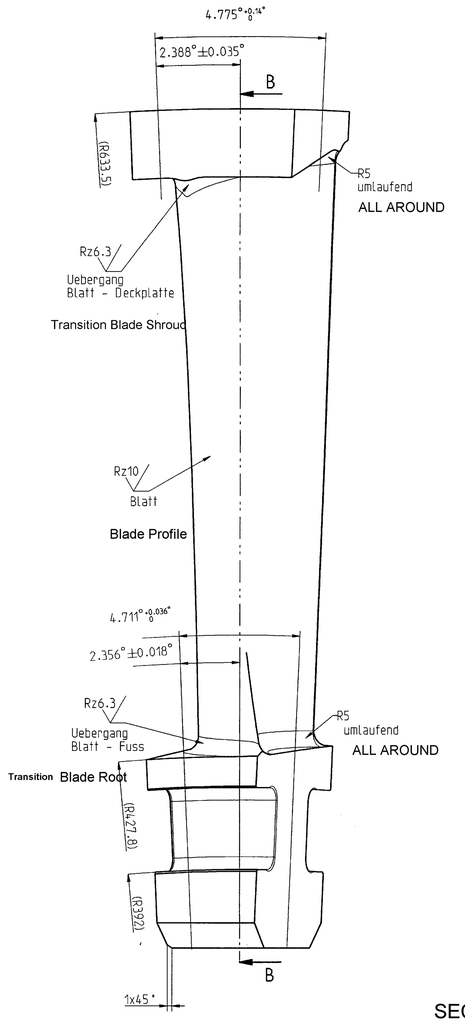

All Dimensions Referred on R633.5

Alle Masze bezogen auf R633.5

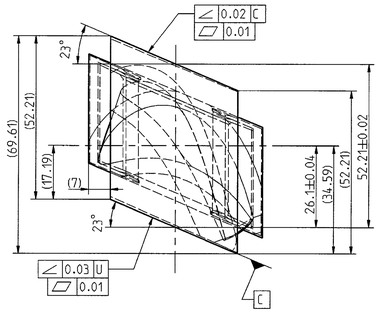

SECTION C - C

Alle Masze bezogen auf R367

All Dimensions Referred on R367

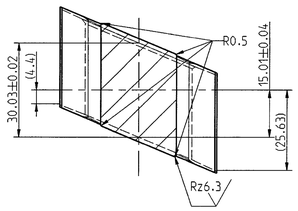

SECTION A2 - A2

Alle Masze bezogen auf R432

All Dimensions Referred on R432

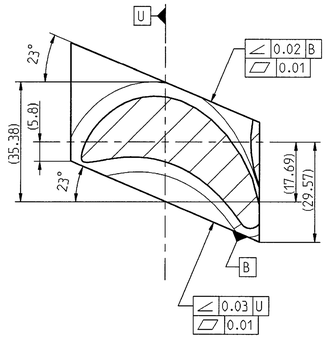

SCHEME OF DIMENSIONS

PRESSURE SIDE

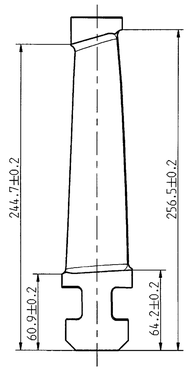

SUCTION SIDE

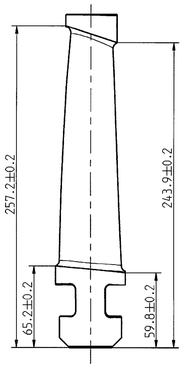

PROFILE TOLERANCE FOR THE CHECKING SECTIONS **AX-AX**

Profiltoleranzen

für die Prüfschnitte AX-AX

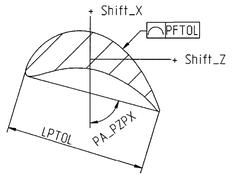

PFTOL	0.20
Shift_X	+0.40 -0.20
Shift_Z	+0.40 -0.20
PA_PZPX	±0.20°
LPTOL	+0.20 -0.40

ROOT DETAIL

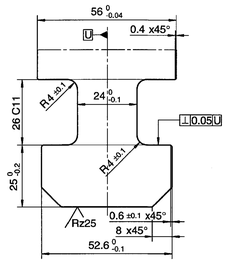

L — LINKS — LEFT

R — RECHTS — RIGHT

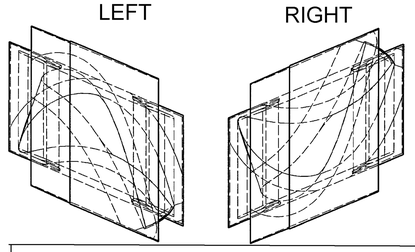

Endschaufeln **LOCK BLADE**

fehlende Maße Endschaufel siehe Laufschaufel

Pos No. 2

Sachnummer	Drehrichtung
4-4920-2211-00	LINKS
4-4920-2201-00	RECHTS

SECTION E-E

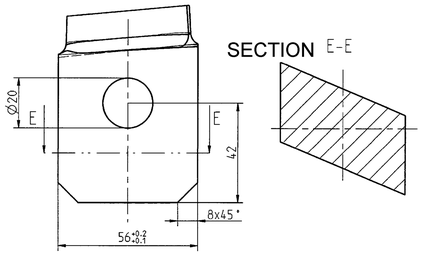

NOTES:

1. Profile co-ordinates a per Drg No. 0-303-19-00005-00.
2. Profile Checking Sections A5, A15,A26.
3. Final Machining as per Blading Plan.
4. Total No. of Blades including Lock Blade : 77 Pieces.
5. For 250mm Length Sin Bar: Ey for Half Angle = 9.579.
   Ey for Full Angle = 19.185.

DESCRIPTION / MATERIAL SPEC	POS. NO.	DESCRIPTION	VAR
Flat 95X70 / X20Cr13V	2	Lock Blade-Right	03
	1	Normal Blade-Right	02
	2	Lock Blade-Left	01
	1	Normal Blade-Left	00

TYPE OF PRODUCT OR NAME OF CUSTOMER/PROJECT

	NAME	SIGN	DATE	NO OF VAR
DRN	HARISH		08.09.07	NA
CHD	T.S.Prabhakar		08.09.07	
APPD	C.N.V.Ramana		08.09.07	

DEPT ITD	UNTOL DIMS GR	SCALE	WEIGHT (KG)	REF TO ASSY DRG	ITEM NO	NO OF ITEMS
CODE 415	C/M/F	NTS	1.56	NA	NA	NA

TITLE **L P MOVING BLADE-1 (SL 2.2 SQM)**

CARD CODE

DRAWING NO. **1-303-19-00019** REV 00

SHT No 01 NO OF SHT 01

ALTERED	REV	DATE	ALTERED	REV	DATE	ALTERED	REV	DATE	ALTERED	REV	DATE	ALTERED	REV	DATE	ALTERED	REV	DATE	ALTERED	REV	DATE	ALTERED	REV	DATE	ALTERED
CHD/APPD			CHD/APPD			CHD/APPD			CHD/APPD			CHD/APPD			CHD/APPD			CHD/APPD			CHD/APPD			CHD/APPD
	ZONE			ZONE			ZONE			ZONE			ZONE			ZONE			ZONE			ZONE		

THE INFORMATION ON THIS DOCUMENT IS THE PROPERTY OF IT MUST NOT BE USED DIRECTLY OR INDIRECTLY IN ANY WAY DETRIMENTAL TO THE INTEREST OF THE COMPANY

GENERAL DIMENSIONAL LIMITS, FITS & TOLERANCES AS PER HY0230261

INVENTORY NO | SIGN AND DATE | REF DRG NO 0-2128-2201-00/M | REV-A | COMPUTER FILE NAME

Rz 16 = 0.8 (Rz 6.3 = 0.4 , Rz 10 = 0.8 , Rz 25 = 1.6 , Rz 100 = 12.5)

FIRST ANGLE PROJECTION

(ALL DIMENSIONS ARE IN mm)

DRG. NO. 3-303-21-00060

SH. 01 OF 01

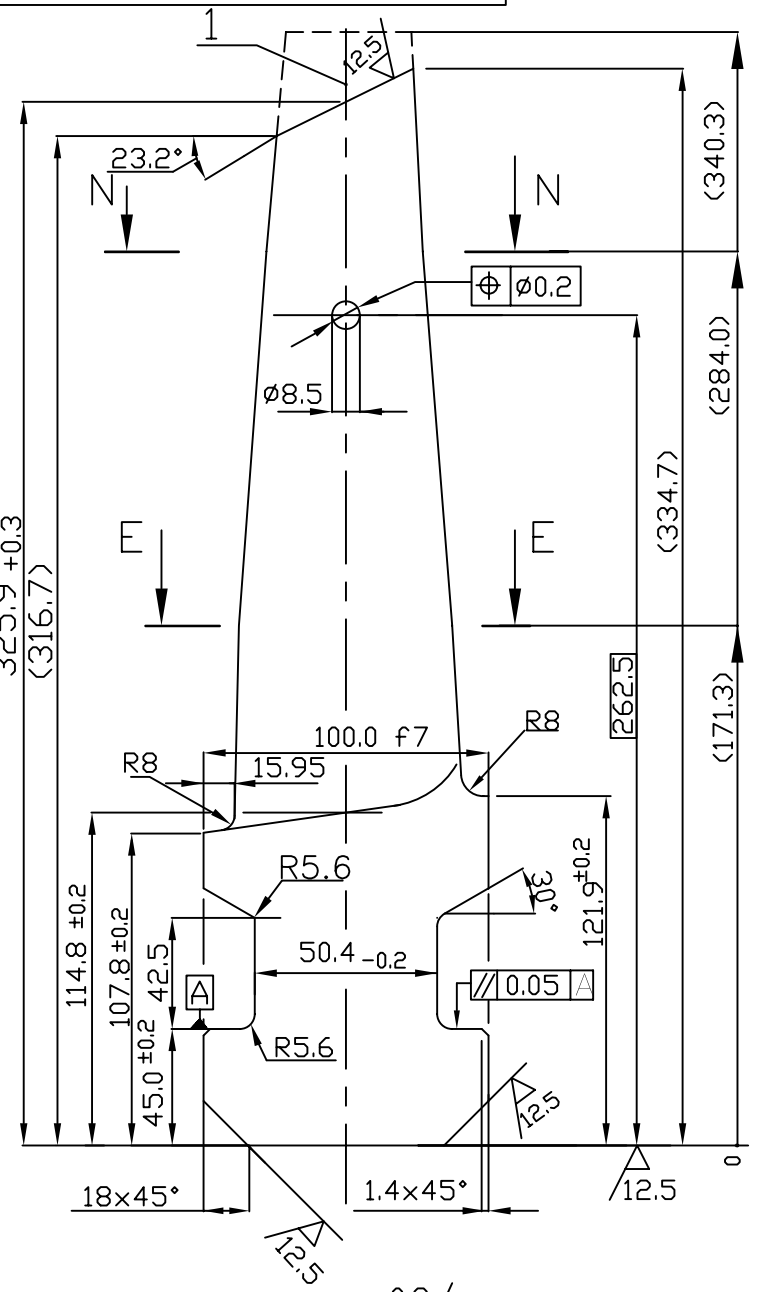

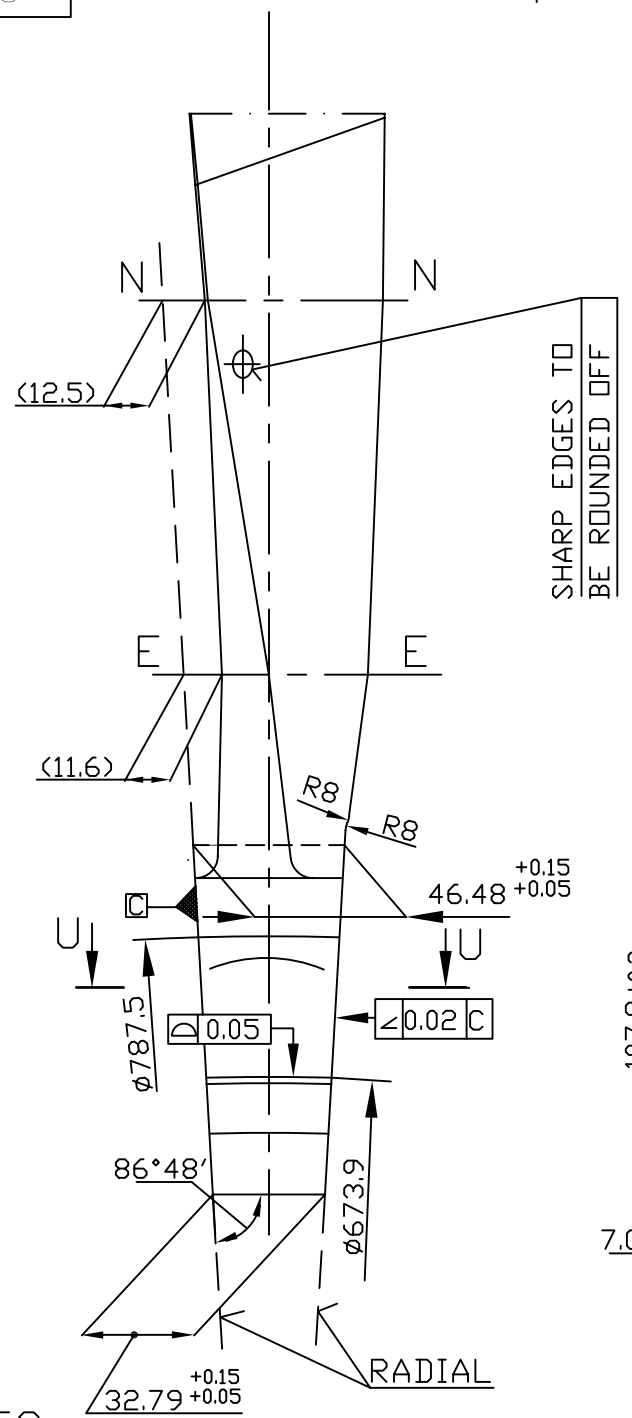

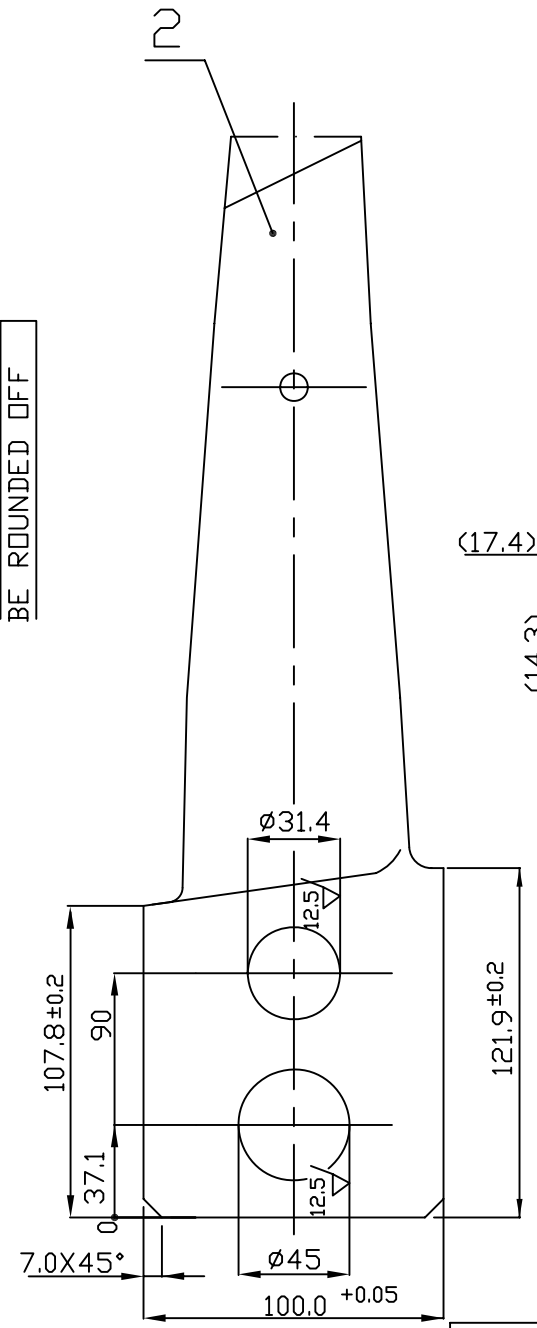

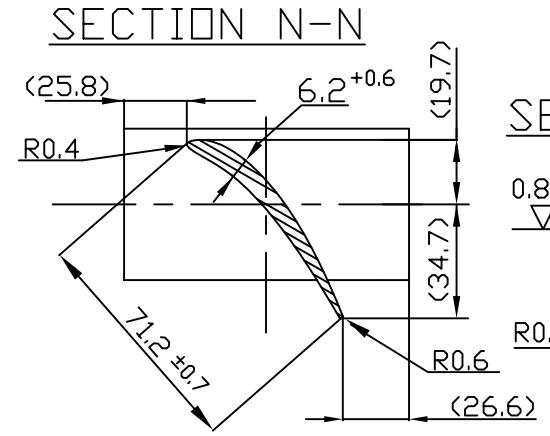

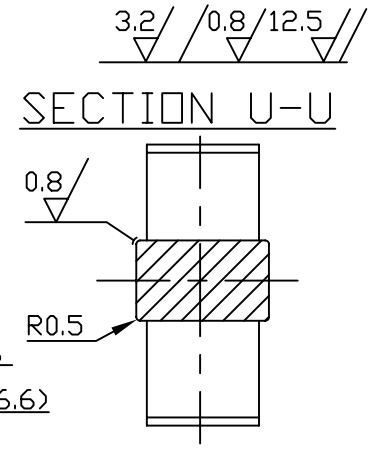

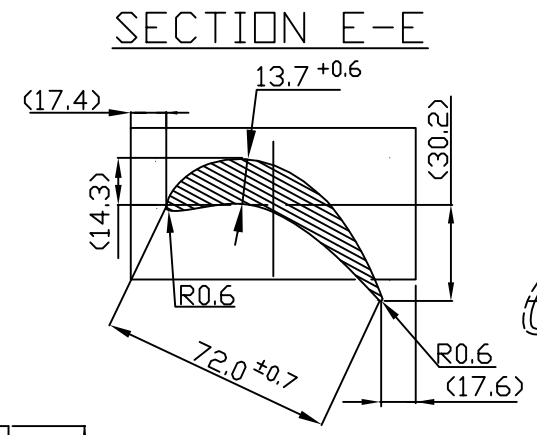

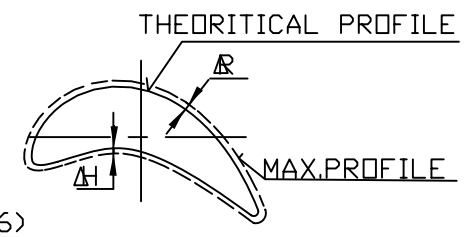

ΔRmax = 0.8 ΔRmin = 0 ΔHmax = 0.2

ΔHmin = 0 max difference ΔR= 0.4

Σ(ΔR + ΔH)max =0.8 Σ(ΔR+ΔH)min= 0.2

DIRECTION ROTATION IS ANTI-CLOCK WISE WHEN SEEN IN THE DIRECTION OF STEAM FLOW.

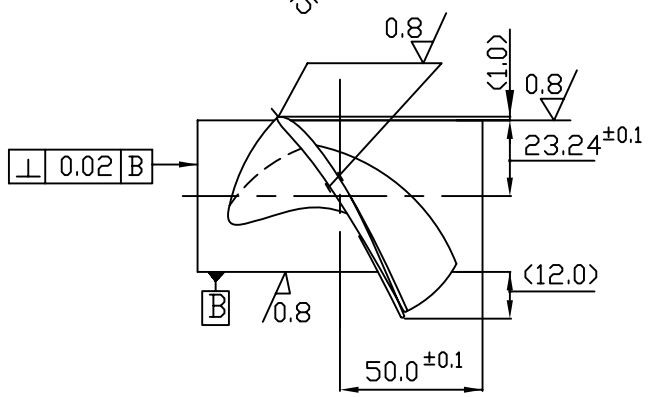

NOTES:

1. PROFILE CO-ORDINATES AS PER DRG.No.1-303-21-00003-00 (2Sh)
2. FINAL MACHINING AS PER BLADING PLAN.
3. MISSING DIMENSIONS OF Pos.No.2. TO BE SEEN IN Pos.No.1.
4. EY FOR FULL ANGLE = 28.02
   EY FOR HLAF ANGLE = 14.03

FL.110 x 75	HY10764	3.35	1	2	-00
FL.110 x 75		3.35	55	1	
DESCRIPTION	Mat. Spc.	Wt.	No.Of Pcs.	POS.	VAR.

TYPE OF PRODUCT OR NAME OF CUSTOMER/PROJECT

	NAME	SIGN.	DATE	NO.OF VAR.
DRN.	T S PRABHAKAR		18.10.2004	-N.A-
CHD.	T S PRABHAKAR		18.10.2004	
APPD.	CNV RAMANA		18.10.2004	

DEPT. I.T.D.	UNTOL. DIMS. GR. ~~C/M/F~~		SCALE N.T.S	WEIGHT (KG) -N.A-	REF. TO ASSY. DRG. -N.A.-	ITEM NO. -N.A.-	NO.OF ITEMS -N.A.-
CODE 415							

TITLE LP MOVING BLADE SK 80-2 LEFT

CARD CODE N.A.

DRAWING NO. 3-303-21-00060 REV. 00

SHT. No 01 NO. OF SHT. 01

REV.	DATE	ALTERED CHD/APPD	REV.	DATE	ALTERED CHD/APPD	REV.	DATE	ALTERED CHD/APPD
ZONE			ZONE			ZONE		

INVENTORY NO | SIGN. AND DATE | REF. DRG. NO. 4-2234-1905-00 | REV: E | COMPUTER FILE NAME

GENERAL DIMENSIONAL LIMITS, FITS & TOLERANCES AS PER HY0230261