THIRD ANGLE PROJECTION

(ALL DIMENSIONS ARE IN mm)

0-351-29-61006

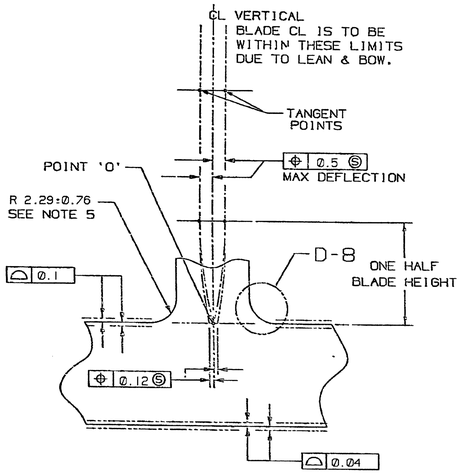

SECTION F-7 (G-3)

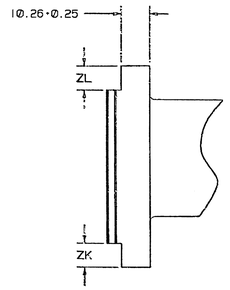

VIEW F-5 (G-5)

F-5 →

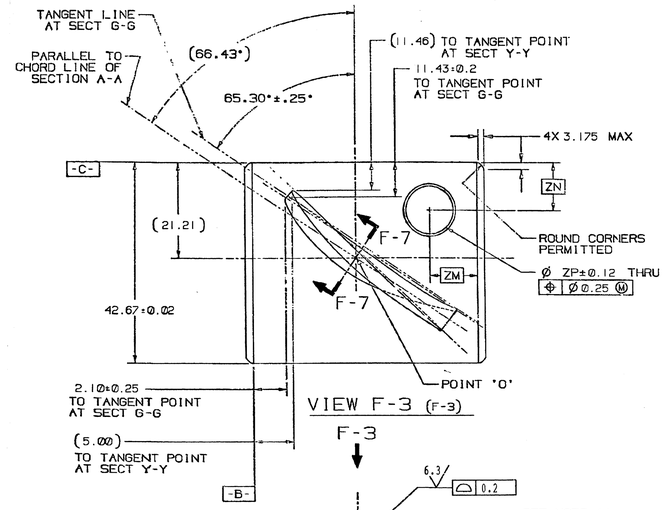

VIEW F-3 (F-3)

F-3 ↓

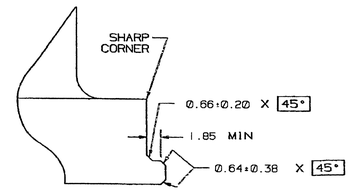

DETAIL E-5 (C-3)
(APPLIES TO BOTH SIDES OF BASE)

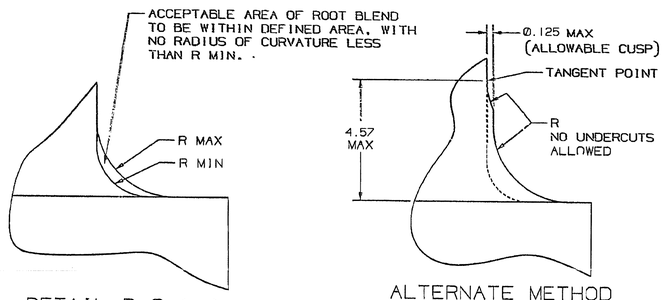

DETAIL D-8 (G-7)

ALTERNATE METHOD OF MANUFACTURE
(REFER TO DETAIL D-8)

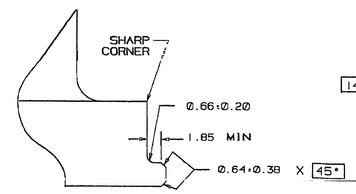

ALTERNATE METHOD OF MANUFACTURE
(REFER TO DETAIL E-5)

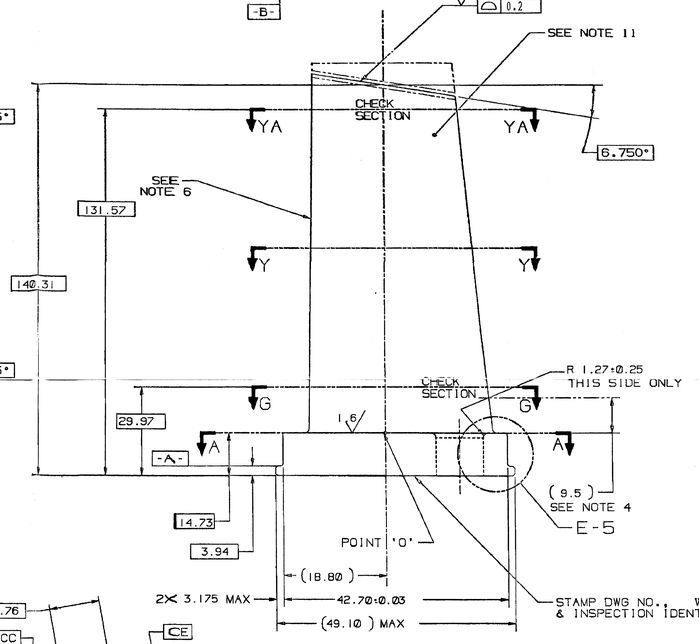

NOTES:

1. FOR APPLICABLE DRAWING NOTES SEE ITEM 2.

VAR	ZK± 0.12	ZL± 0.12	ZM	ZN	ZP	MATERIAL	COATING	REF
01	OMIT	OMIT	OMIT	OMIT	OMIT	HY10988	OMIT	P1
02	OMIT	6.73	OMIT	OMIT	OMIT	HY10988	OMIT	P2
03	6.73	OMIT	OMIT	OMIT	OMIT	HY10988	OMIT	P3
04	OMIT	OMIT	OMIT	OMIT	OMIT	HY10988	ITEM 6	P4
05	OMIT	6.73	OMIT	OMIT	OMIT	HY10988	ITEM 6	P5
06	6.73	OMIT	OMIT	OMIT	OMIT	HY10988	ITEM 6	P6
07	OMIT	OMIT	OMIT	OMIT	OMIT	HY10988	ITEM 7	P7
08	OMIT	6.73	OMIT	OMIT	OMIT	HY10988	ITEM 7	P8
09	6.73	OMIT	OMIT	OMIT	OMIT	HY10988	ITEM 7	P9
10	OMIT	OMIT	9.14	9.14	14.27	HY10988	OMIT	P10
11	OMIT	OMIT	9.14	9.14	14.27	HY10988	ITEM 6	P11
12	OMIT	OMIT	9.14	9.14	14.27	HY10988	ITEM 7	P12
25	MATL HY10996 OWSA VAR 02							-
26	MATL HY10996 OWSA VAR 03							-
27	MATL HY10996 OWSA VAR 10							-

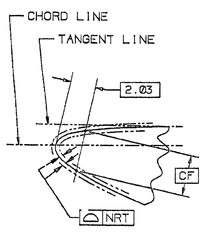

DETAIL B-8 (C-6)
(LEADING EDGE)

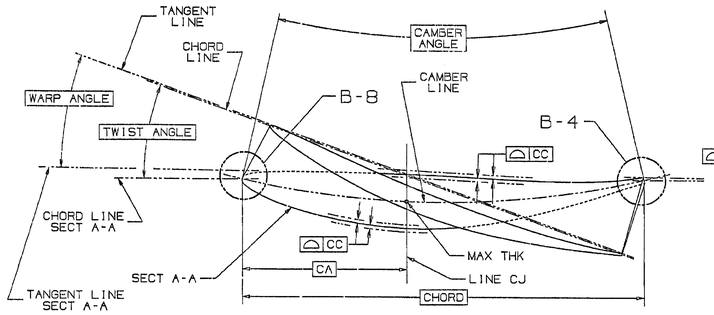

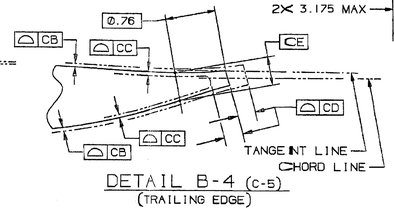

DETAIL B-4 (C-5)
(TRAILING EDGE)

SECTION	SECTION HEIGHT	CHORD	PERCENT THICKNESS	CAMBER ANGLE	TWIST ANGLE	WARP ANGLE	THICKNESS AT 'CA'	CA	CB	CC	CD	CE	CF	NRT
A-A	0.00	42.67	13.500	27.800	.000	.000	5.756	17.069	0.048	0.086	0.427	0.729	2.342	0.076
G-G	15.24	41.88	13.100	28.000	.567	.500	5.484	16.754	0.046	0.091	0.418	0.696	2.250	0.076
Y-Y	53.34	39.90	12.000	28.300	2.231	2.000	4.785	15.961	0.041	0.079	0.399	0.612	2.012	0.076
YA-YA	116.84	36.60	10.200	28.750	5.322	4.829	3.767	14.640	0.038	0.076	0.366	0.574	1.641	0.076

-C-	G-4	1	
-B-	F-3	1	
-A-	D-4	1	
DATUM	ZONE	SHEET	

MATING PART REFERENCE DATA	
POINT 'O' Ø	1113.76
CONE ANGLE	.000

7	COATING, ALUMINUM-INORGANIC	P16A-A93	GT10125
6	COATING, ALUMINUM-INORGANIC	P16A-A95	GT10626
5	ACPT REQT-BLADES & VANES	P29A-A99OG	GT10128
4	COMPR VANES-PROCESSING	P3C-A960	GT10833
3	X-Y COORDS (217X221)	324A5238	GT10356
2	APPLICABLE DWG NOTES	314A5140	GT10459
1	APPLIED PRACTICES	348A9200	HY0230261
IT.	NOMENCLATURE	IDENT	BHEL SPEC

LIST OF COMPLEMENTARY DOCUMENTS

TYPE OF PRODUCT OR NAME OF CUSTOMER/PROJECT: GAS TURBINE FR-6B

	NAME	SIGN.	DATE	NO. OF VAR.
DRN.	CNBS		01.06.99	
CHD.	R.SRINIVAS		01.06.99	NA
APPD.	K.N.M		01.06.99	

DEPT. CODE	UNTOL. DIMS. OR	SCALE	WEIGHT (KG)	REF. TO ASSY. DRG.	ITEM NO.	NO. OF ITEMS
423	E/M/F	NTS	0.32	-/NA	NA	NA

TITLE: VANE STATOR STG 5

CARD CODE

DRAWING NO. 0-351-29-61006 REV. 00

SHT. No. 01 NO OF SHT. 01

REV.	DATE	ALTERED CHD/APPD	ZONE

THE INFORMATION ON THIS DOCUMENT IS THE PROPERTY OF BHEL. IT MUST NOT BE USED DIRECTLY OR INDIRECTLY IN ANY WAY DETRIMENTAL TO THE INTEREST OF THE COMPANY

GENERAL DIMENSIONAL LIMITS,FITS & TOLERANCES AS PER HY0230261

COMPUTER FILE NAME 01294861.CTF

SIGN. AND DATE | REF. DWG. NO. 1095155 REV -

INVENTORY NO.

THIRD ANGLE PROJECTION

(ALL DIMENSIONS ARE IN mm)

DRG. NO 0-35129-91002

SH. OF

NOTES:

1. FOR APPLICABLE DRAWING NOTES SEE ITEM 2.

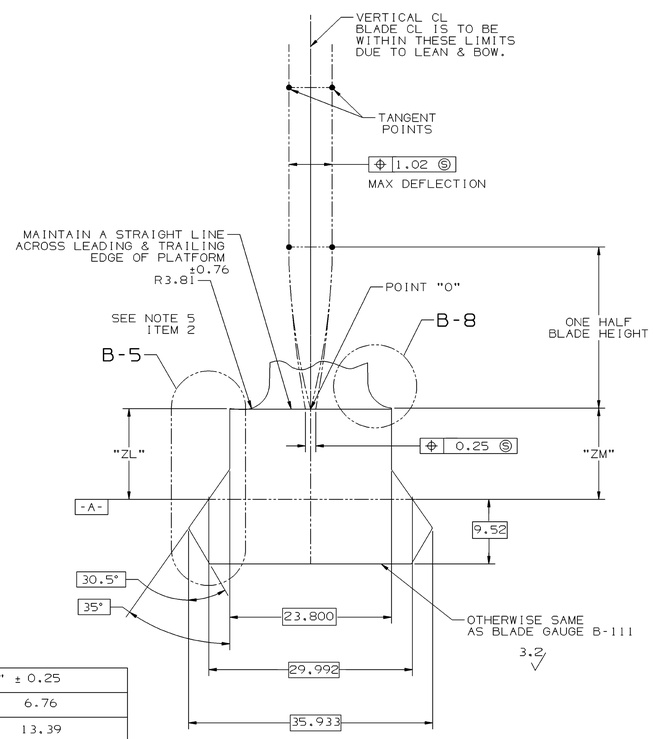

SECTION BA-BA,
BB-BB AND BC-BC [F-3 AND G-3]
(ROTATED 122.83° CCW)
(ENLARGED)

SEE NOTE 6
ITEM 2

SECTION	"ZL" ±0.25	"ZM" ± 0.25
BA-BA	7.54	6.76
BB-BB	13.39	13.39
BC-BC	22.28	23.32

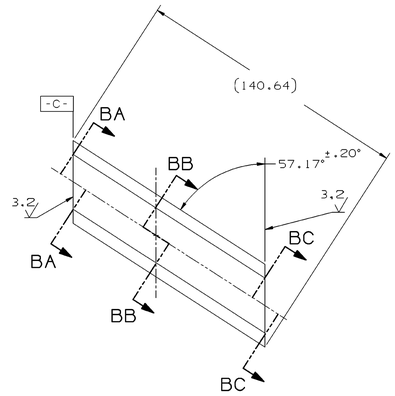

VIEW F-3 (F-3)
(AIRFOIL REMOVED FOR CLARITY)

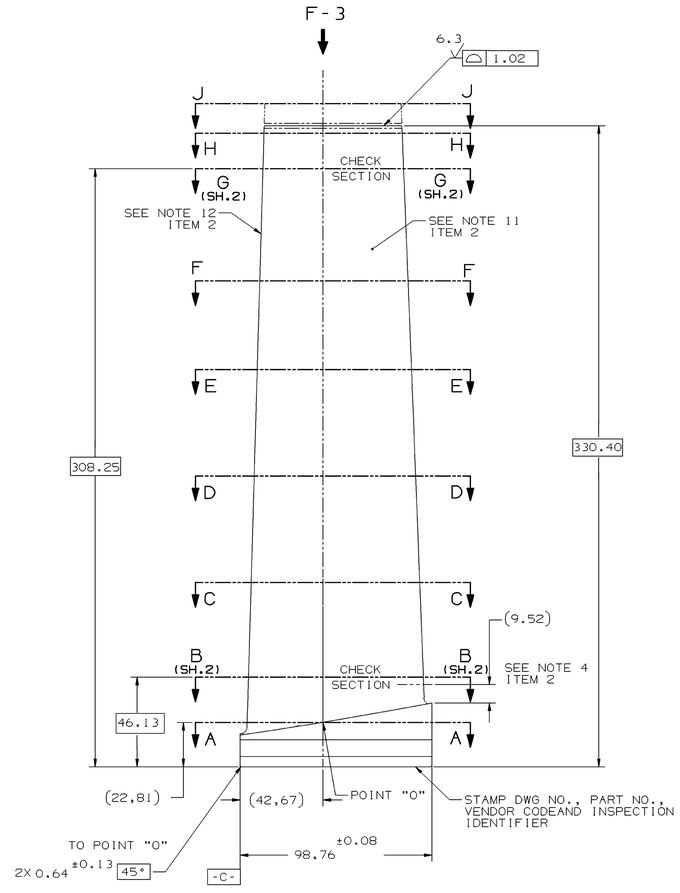

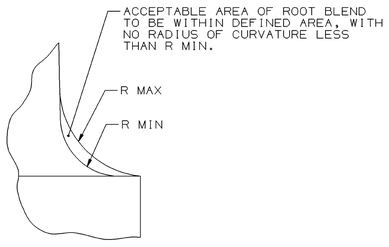

DETAIL B-8 (G-5)

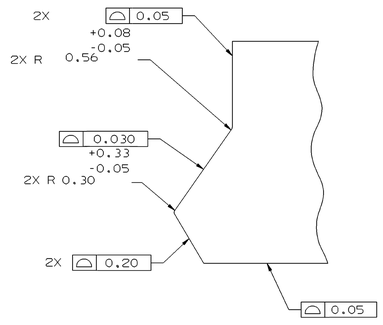

DETAIL B-5 (F-6)

01	As shown
VAR	Desc.

MATING PART REFERENCE DATA	
POINT 'O' Ø	2030,53
CONE ANGLE	8.800°
DOVETAIL ANGLE	57.167°

5	ACPT REQT BLADES & VANES	P29A-AG900	GT10128
4	COMPR VANES PROCESSING	P3C-AG60	GT10083
3	X-Y COORDS	287A7833	GT10694
2	APPLICABLE DWG NOTES	314A5112	GT10459
1	APLD PRAC, GENL MACH	348A9200	GT10582
	NOMENCLATURE	IDENT	BHELSPEC
	LIST OF COMPLEMENTARY DOCUMENTS		

DATUM	ZONE	SHEET
C	H-3	1
B	G-8	2
A	F-6	1

THIRD ANGLE PROJECTION

GENERAL DIMENSIONAL LIMITS,FITS & TOLERANCES AS PER HY0230261

THE INFORMATION ON THIS DOCUMENT IS THE PROPERTY OF NOT BE USED DIRECTLY OR INDIRECTLY IN ANY WAY DETRIM

COMPUTER FILE NAME: 109E5105 REV'E' | REF. DRG. NO: 109E5105-SH1.TIF | SIGN. AND DATE | INVENTORY NO

TYPE OF PRODUCT OR

NAME OF CUSTOMER/PROJECT

	NAME	SIGN.	DATE	NO.OF VAR.
DRN.	SCS		6-12-96	NA
CHD.	AJAY		6-12-96	
APPD.	S.SRIRAM		6-12-96	

DEPT. GTD CODE. 423	UNTOL. DIMS. GR.	SCALE NTS	WEIGHT (KG) 2.2	REF. TO ASSY. DRG. 109E5105	ITEM NO. NA	NO.OF ITEMS NA

TITLE: VANE STATOR STG 2

CARD CODE

DRAWING NO. 0-35129-91002 REV. 00

SHT. No 01 NO OF SHT. 02

REV.	DATE	ALTERED	CHD/APPD
		-	-

ZONE

THIRD ANGLE PROJECTION

DRG. NO 0-353-05-61011 | SH. 1 OF 1

(ALL DIMENSIONS ARE IN mm)

NOTES:

1. FOR APPLICABLE DRAWING NOTES SEE ITEM 2.

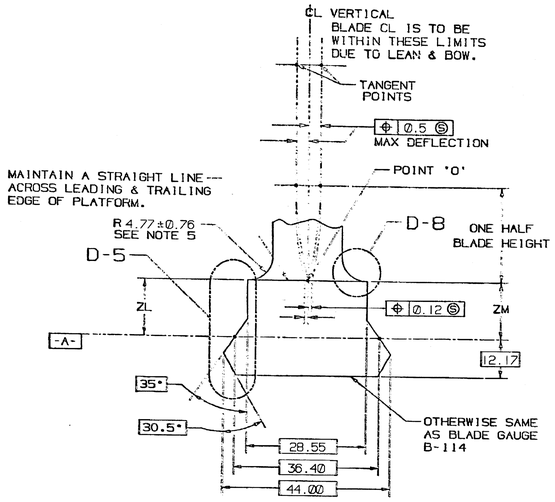

SECTIONS BA-BA, BB-BB & BC-BC (G-3)

SEE NOTE 6

SECTION	ZL ±0.25	ZM ±0.25
BA-BA	8.97	10.10
BB-BB	9.88	9.88
BC-BC	10.08	8.97

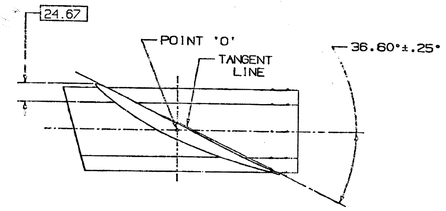

SECTION ZN-ZN (E-3)

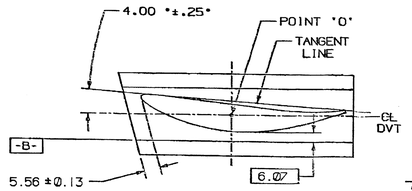

SECTION G-G (D-3)

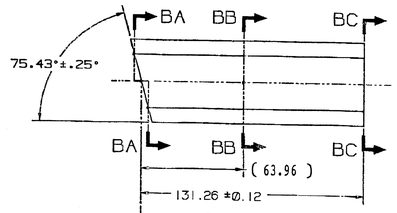

VIEW G-3 (F-3)
(AIRFOIL DELETED FOR CLARITY)

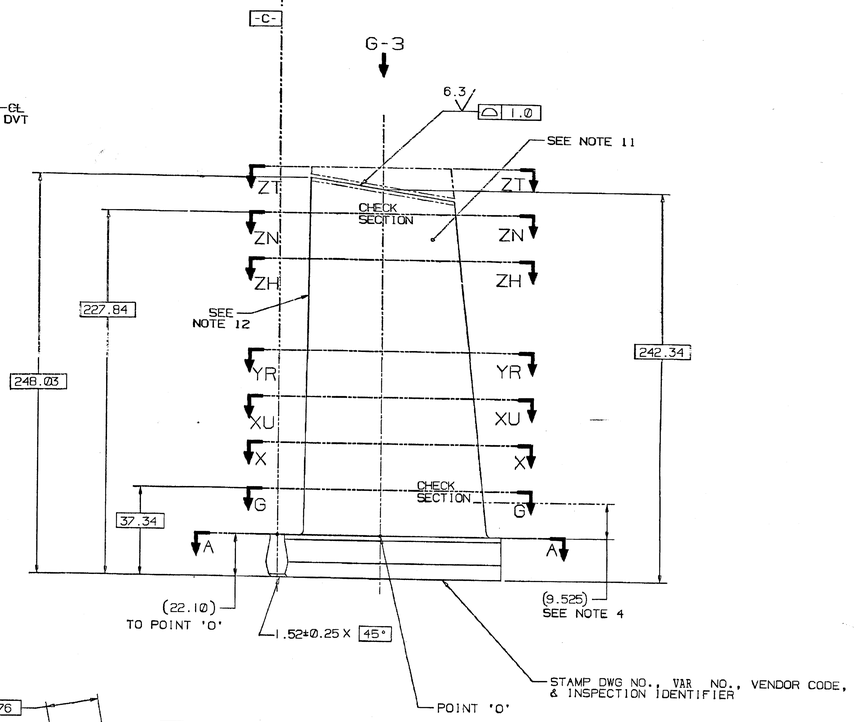

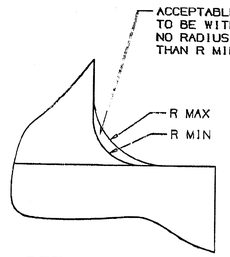

DETAIL D-8 (G-7)

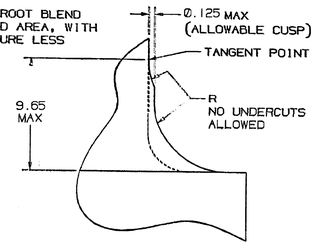

ALTERNATE METHOD OF MANUFACTURE
(REFER TO DETAIL D-8)

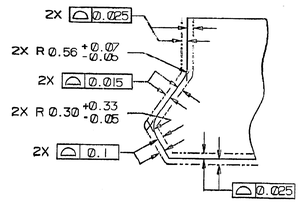

DETAIL D-5 (G-7)

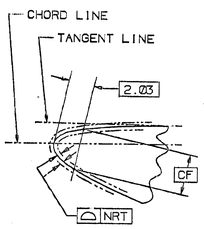

DETAIL B-8 (C-8)
(LEADING EDGE)

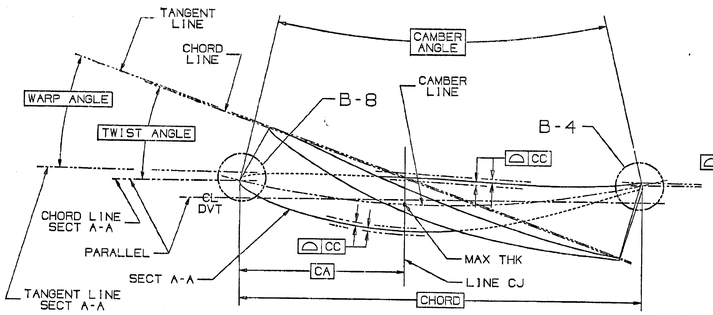

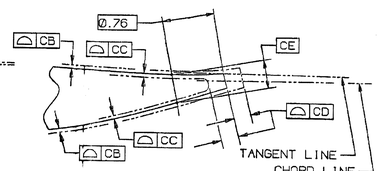

DETAIL B-4 (C-5)
(TRAILING EDGE)

SEE NOTES 9 & 10

SECTION	SECTION HEIGHT	CHORD	PERCENT THICKNESS	CAMBER ANGLE	TWIST ANGLE	WARP ANGLE	THICKNESS AT 'CA'	CA	CB	CC	CD	CE	CF	NRT
A-A	0.00	123.98	13.500	32.000	.000	N/A	16.736	61.989	0.142	0.282	1.240	2.238	2.835	0.119
G-G	15.24	123.98	12.800	29.800	4.000	N/A	15.870	61.989	0.135	0.267	1.240	2.113	2.685	0.111
X-X	50.80	123.98	11.150	24.700	12.500	N/A	13.823	61.989	0.114	0.231	1.240	1.829	2.334	0.094
XU-XU	101.60	123.98	8.800	18.200	22.500	N/A	10.910	61.989	0.091	0.180	1.240	1.435	1.829	0.076
YR-YR	152.40	123.98	6.450	13.000	30.300	N/A	7.996	61.989	0.066	0.132	1.240	1.046	1.336	0.076
ZH-ZH	193.04	123.98	4.600	9.600	35.300	N/A	5.702	61.989	0.046	0.094	1.240	0.744	0.950	0.076
ZN-ZN	205.74	123.98	4.000	8.700	36.600	N/A	4.933	61.989	0.041	0.081	1.240	0.648	0.826	0.076
ZT-ZT	215.90	123.98	3.550	8.000	37.400	N/A	4.402	61.989	0.036	0.071	1.240	0.574	0.734	0.076

-C-	F-4	1
-B-	F-8	1
-A-	F-8	1
DATUM	ZONE	SHEET

MATL HY10996 (C450)	01
DESCRIPTION	VAR

MATING PART REFERENCE DATA	
POINT 'O' Ø	833.92
RIM ANGLE	.000
DOVETAIL ANGLE	75.433

5	ACPT REQT-BLADES & VANES	P29A-AG900	GT10128
4	COMPR VANES-PROCESSING	P3C-AG80	GT10083
3	X-Y COORDS (216X966)	324A5255	GT10361
2	APPLICABLE DWG NOTES	314A5112	GT10307
1	APPLIED PRACTICES	348A9200	HY230261
IT.	NOMENCLATURE	IDENT	SPECN

LIST OF COMPLEMENTARY DOCUMENTS

GENERAL DIMENSIONAL LIMITS,FITS & TOLERANCES AS PER HY230261

TYPE OF PRODUCT OR NAME OF CUSTOMER/PROJECT	GAS TURBINE FR-6		
DRN.	SCS	24-3-99	NA
CHD.	RS	24-3-99	
APPD.	KMH	24-3-99	
DEPT. GTD	UNTOL. DIMS. OK G/M/F	SCALE NTS	WEIGHT (KG) 2.4
REF. TO ASSY. DRG. NA	ITEM NO. NA	NO. OF ITEMS NA	
TITLE BLADE ROTOR STG 1	CARD CODE NA	DRAWING NO. 0-353-05-61011	REV. 00
		SHT. No. 1	NO OF SHT. 1

REV.	DATE	ALTERED CHD/APPD	ZONE

THIRD ANGLE PROJECTION

(ALL DIMENSIONS ARE IN mm)

DRG. NO. 0-353-05-61013 | SH. 1 OF 1

NOTES:

1. FOR APPLICABLE DRAWING NOTES SEE ITEM 2.

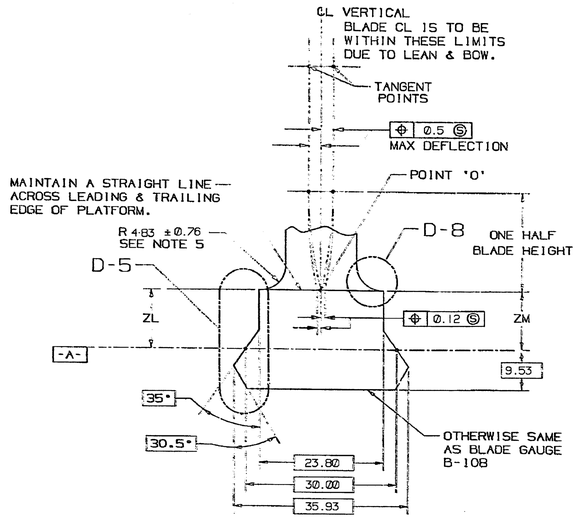

SECTIONS BA-BA, BB-BB & BC-BC (G-3)

SEE NOTE 6

SECTION	ZL ±0.25	ZM ±0.25
BA-BA	7.19	7.87
BB-BB	7.75	7.75
BC-BC	7.85	7.06

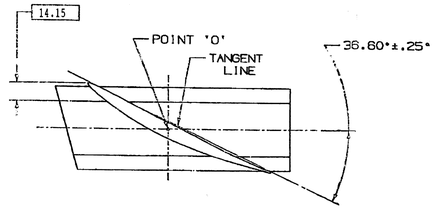

SECTION S-E (E-3)

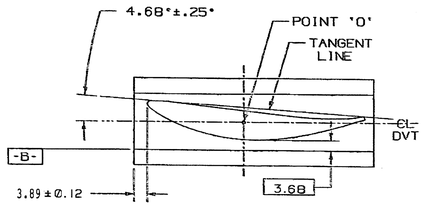

SECTION B-B (D-3)

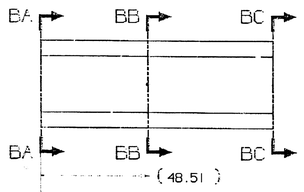

VIEW G-3 (F-3)
(AIRFOIL DELETED FOR CLARITY)

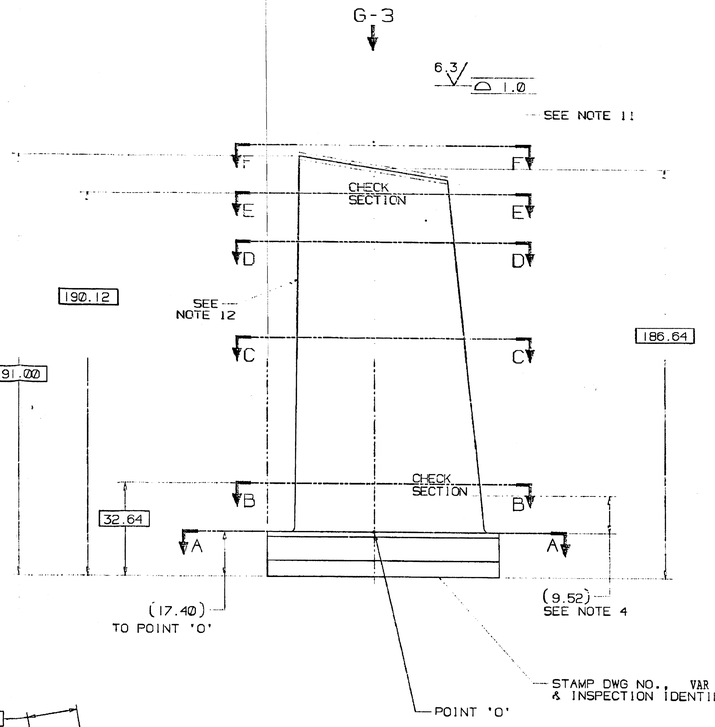

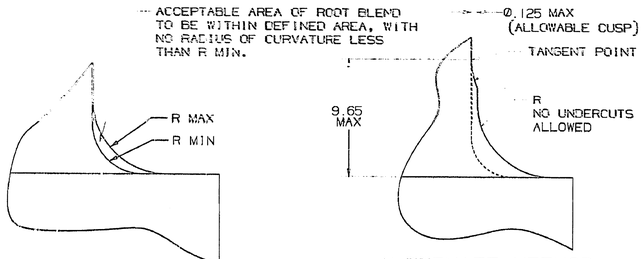

DETAIL D-8 (G-7)

ALTERNATE METHOD OF MANUFACTURE
(REFER TO DETAIL D-8)

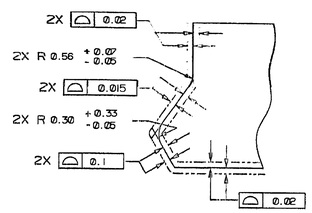

DETAIL D-5 (G-7)

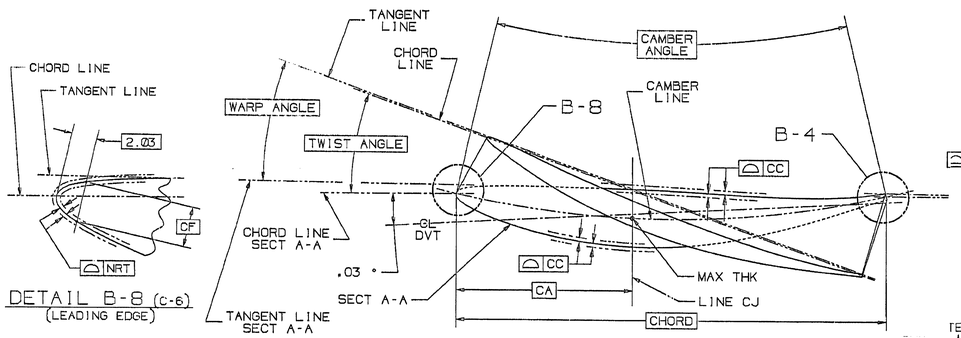

DETAIL B-8 (C-6)
(LEADING EDGE)

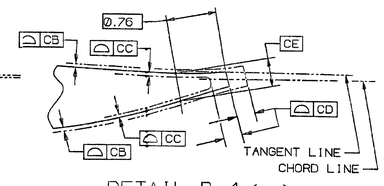

DETAIL B-4 (C-5)
(TRAILING EDGE)

SECTION	SECTION HEIGHT	CHORD	PERCENT THICKNESS	CAMBER ANGLE	TWIST ANGLE	WARP ANGLE	THICKNESS AT 'CA'	CA	CB	CC	CD	CE	CF	NRT
A-A	0.00	99.187	13.500	37.000	.000	.000	13.380	39.675	0.112	0.223	0.980	1.572	3.647	0.125
B-B	15.24	99.187	12.700	34.000	4.384	4.400	12.590	39.675	0.104	0.210	0.980	1.481	3.444	0.109
C-C	101.60	99.187	8.250	21.200	24.271	24.234	8.176	39.675	0.060	0.137	0.980	0.963	2.263	0.076
D-D	152.40	99.187	5.630	15.800	31.706	31.567	5.580	39.675	0.046	0.094	0.980	0.658	1.549	0.076
E-E	172.72	99.187	4.580	13.900	34.250	34.067	4.541	39.675	0.038	0.076	0.980	0.538	1.260	0.076
F-F	190.50	99.187	3.650	12.300	36.642	36.397	3.660	39.675	0.038	0.076	0.980	0.531	1.008	0.076

-C-	F-4	1
-B-	F-R	1
-A-	F-8	1
DATUM	ZONE	SHEET

MATL HY10896 (C450)OWSA VAR 01	-	10
COAT PER ITEM 7 OWSA VAR 01	P3	03
COAT PER ITEM 6 OWSA VAR 01	P2	02
MATL HY10888 (AISI 403 CD)	P1	01
DESCRIPTION	REF	VAR

MATING PART REFERENCE DATA	
POINT 'O' Ø	033.97
RIM ANGLE	.000
DOVETAIL ANGLE	75.433

7	COATING, ALUMINUM-INORGANIC	P16A-A63	GT10125
6	COATING, ALUMINUM-INORGANIC	P16A-A65	GT10606
5	ACPT REQT-BLADES & VANES	P29A-A8900	GT10128
4	COMPR VANES-PROCESSING	P3C-A660	GT10083
3	X-Y COORDS (217X369)	324A5244	GT10360
2	APPLICABLE DWG NOTES	314A5112	GT10607
1	APPLIED PRACTICES	348A9200	HY0230261
IT.	NOMENCLATURE	IDENT	SPCEN
	LIST OF COMPLEMENTARY DOCUMENTS		

1 GENERAL DIMENSIONAL LIMITS,FITS & TOLERANCES AS PER HY0230261

COMPUTER FILE NAME 0353611.TIF

REF DWG. NO. 1V994272 REF--

SIGN. AND DATE

INVENTORY NO

TYPE OF PRODUCT OR NAME OF CUSTOMER/PROJECT: GAS TURBINE FR-6

	NAME	SIGN.	DATE	NO.OF VAR
DRN.	SCS		24-3-95	
CHD.	RS		24-3-95	NA
APPD.	RMM		24-3-95	

DEPT.	UNTOL. DIMS.	SCALE	WEIGHT (KG)	REF. TO ASSY. DWG.	ITEM NO.	NO.OF ITEMS
GTD CODE 423	GR. C/M/F	NTS	1.23	NA	NA	NA

TITLE: BLADE, ROTOR-STG 3

CARD CODE: NA | DRAWING NO. 0-353-05-61013 | REV. 00 | SHT. No 1 | NO OF SHT. 1

REV.	DATE	ALTERED	CHD/APPD

THIRD ANGLE PROJECTION

(ALL DIMENSIONS ARE IN mm)

DWG. NO. 0-353-05-91005 SH. 1 OF 1

NOTES:

1. FOR APPLICABLE DRAWING NOTES SEE ITEM 2.

DRAWING		PRECISION MASTER	
PT NO	REV	DWG NO	REV
1-3	—	217X242	B

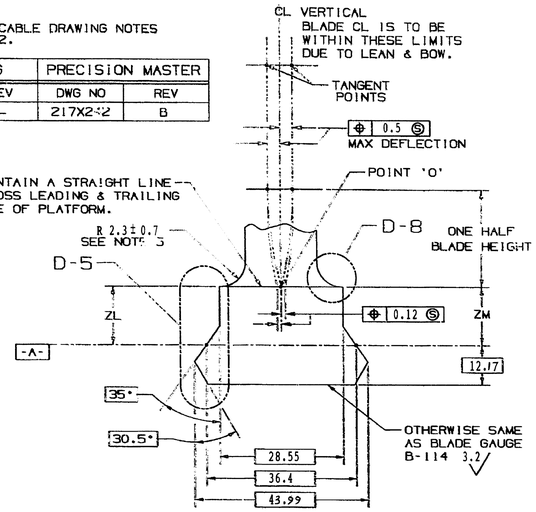

SECTIONS BA-BA, BB-BB & BC-BC (G-3)

SEE NOTE 6

SECTION	ZL ± 0.2	ZM ± 0.2
BA-BA	10.46	9.86
BB-BB	11.28	9.83
BC-BC	11.25	8.81

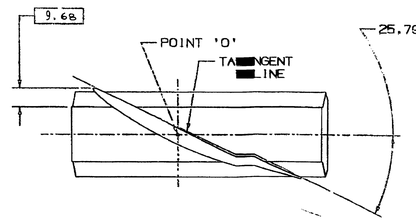

SECTION F-F (E-3)

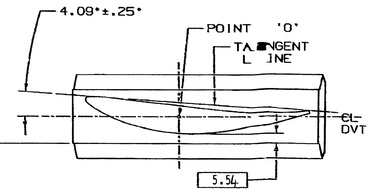

SECTION B-B (D-3)

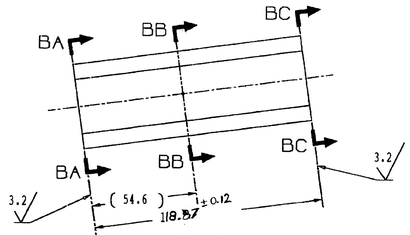

VIEW G-3 (F-3)
(AIRFOIL DELETED FOR CLARITY)

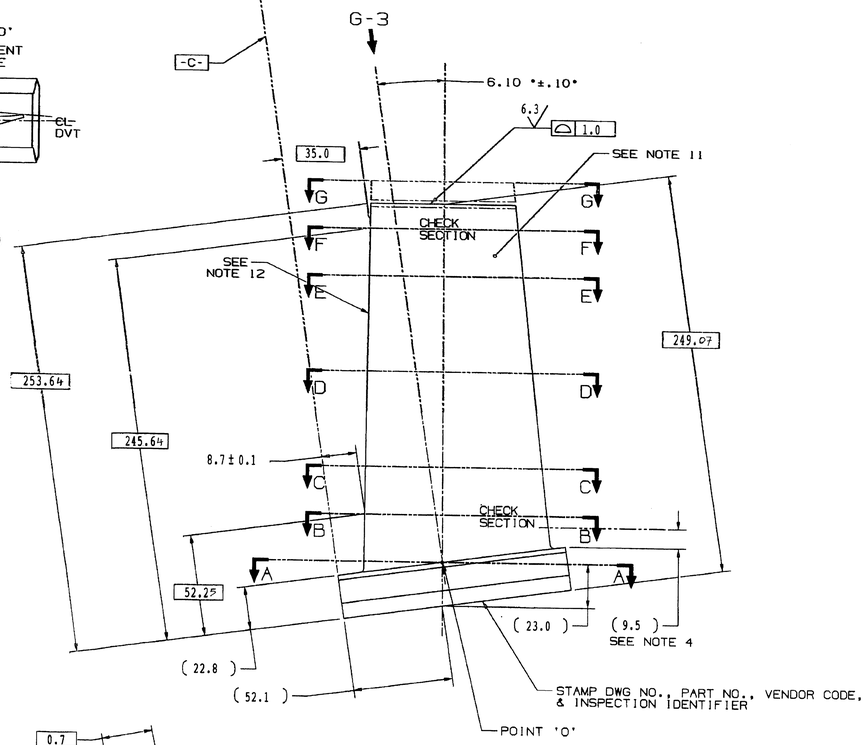

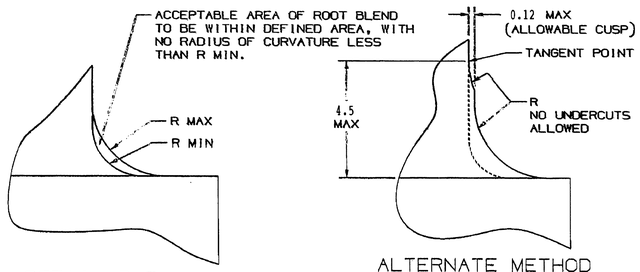

DETAIL D-8 (G-7)

ALTERNATE METHOD OF MANUFACTURE
(REFER TO DETAIL D-8)

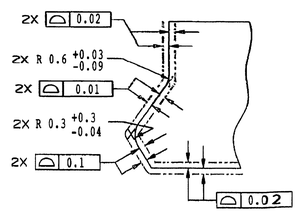

DETAIL D-5 (G-7)

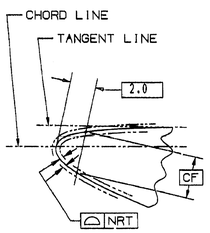

DETAIL B-8 (C-8)
(LEADING EDGE)

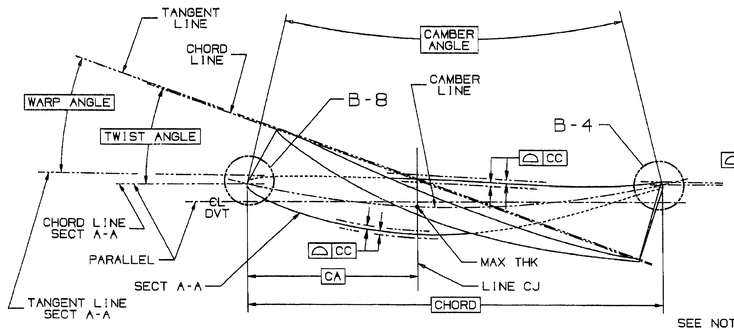

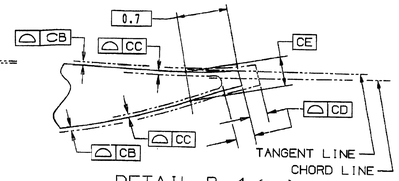

DETAIL B-4 (C-5)
(TRAILING EDGE)

SEE NOTES 9 & 10

SECTION	SECTION HEIGHT	CHORD	PERCENT THICKNESS	CAMBER ANGLE	TWIST ANGLE	WARP ANGLE	THICKNESS AT 'CA'	CA	CB	CC	CD	CE	CF	NRT
A-A	00.00	107.95	13.500	33.200	.000	.000	14.56	43.18	0.12	0.24	1.08	1.71	3.843	0.13
B-B	24.38	107.95	12.800	30.700	3.700	3.713	13.81	43.18	0.11	0.23	1.08	1.62	3.653	0.12
C-C	73.15	107.95	11.402	26.100	10.600	10.632	12.3	43.18	0.1	0.21	1.08	1.44	3.269	0.1
D-D	128.02	107.95	9.829	21.600	17.400	17.425	10.6	43.18	0.09	0.18	1.08	1.24	2.827	0.076
E-E	182.88	107.95	8.255	17.800	22.750	22.733	8.91	43.18	0.07	0.15	1.08	1.04	2.38	0.076
F-F	219.46	107.95	7.206	16.000	25.500	25.416	7.77	43.18	0.066	0.13	1.08	0.91	2.08	0.076
G-G	234.7	107.95	6.769	15.500	26.400	26.278	7.3	43.18	0.06	0.12	1.08	0.86	1.953	0.076

MATING PART REFERENCE DATA	
POINT 'O' Ø	1440.15
RIM ANGLE	6.767
DOVETAIL ANGLE	64.400

7	COATING, ALUMINUM-INORGANIC	P18A-A93	GT10125
6	COATING, ALUMINUM-INORGANIC	P18A-A95	GT10606
5	ACPT REOT-BLADES & VANES	P29A-A9900	GT10128
4	COMPR VANES-PROCESSING	P3C-A980	GT10083
3	X-Y COORDS	287A7882	GT10457
2	APPLICABLE DWG NOTES	314A5112	GT10459
1	APPLIED PRACTICES	348A9200	HY230261
IT.	NOMENCLATURE	IDENT	BREL SPEC

LIST OF COMPLEMENTARY DOCUMENTS

TYPE OF PRODUCT OR NAME OF CUSTOMER/PROJECT: FRAME - 9

	NAME	SIGN.	DATE	NO. OF VAR.
DRN.	SCS		4.3.2000	
CHD.	SKR	S.Kerr	4.3.2000	NA
APPD.	SSR	S.S.R.	4.3.2000	

DEPT. GTD CODE 423 | UNTOL. DIMS. GR. 6/4/1 | SCALE NA | WEIGHT (KG) 2.23 | REF. TO ASSY. DRG. NA | ITEM NO. NA | NO. OF ITEMS NA

TITLE: BLADE ROTOR STG 5

CAGE CODE | DRAWING NO. 0-353-05-91005 | REV. 00

SHT. No. 1 | NO. OF SHT. 1

REV.	DATE	ALTERED	CHD/APPD	ZONE

GENERAL DIMENSIONAL LIMITS, FITS & TOLERANCES AS PER HY023261

SCAL. AND DATE | REF. DWG. NO. 109B5127 REV. - | COMPUTER FILE NAME 0353059109-B08-B03.FIT | INVENTORY NO

THIRD ANGLE PROJECTION

(ALL DIMENSIONS ARE IN mm)

DRG. NO. 0-353-05-91012 SH. 1 OF 1

DRAWING		PRECISION MASTER	
PT NO	REV	DWG NO	REV
1-3	—	217X247	—

NOTES:

1. FOR APPLICABLE DRAWING NOTES SEE ITEM 2.

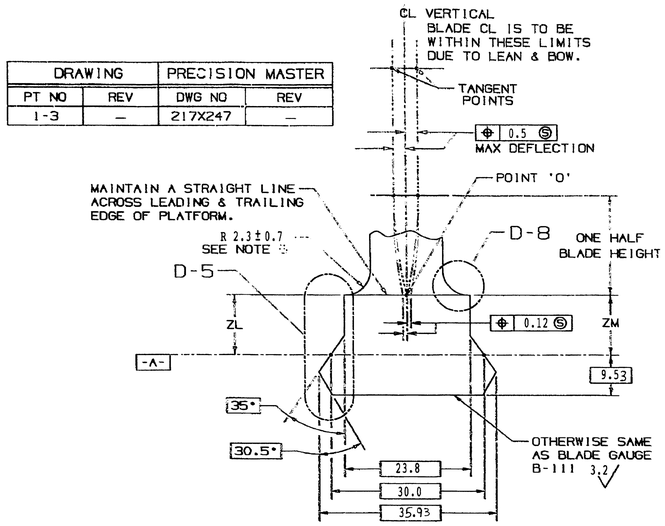

SECTIONS BA-BA, BB-BB & BC-BC (G-3)

SEE NOTE 6

SECTION	ZL $^{+0.0}_{-0.4}$	ZM $^{+0.0}_{-0.4}$
BA-BA	7.37	11.07
BB-BB	12.98	12.98
BC-BC	11.63	8.38

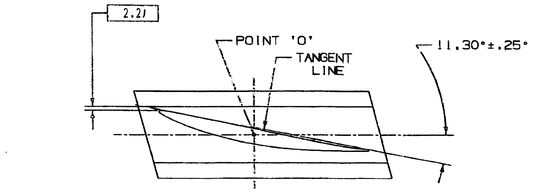

SECTION G-G (E-3)

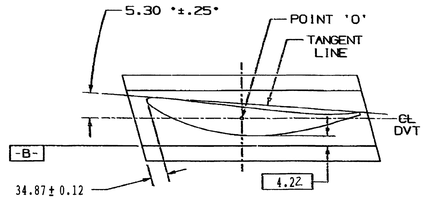

SECTION B-B (D-3)

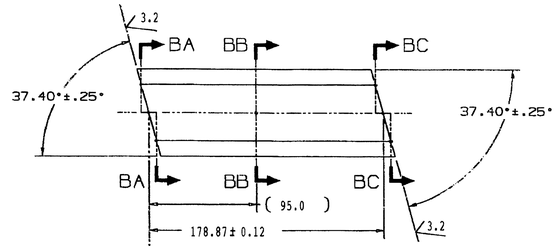

VIEW G-3 (F-3)
(AIRFOIL DELETED FOR CLARITY)

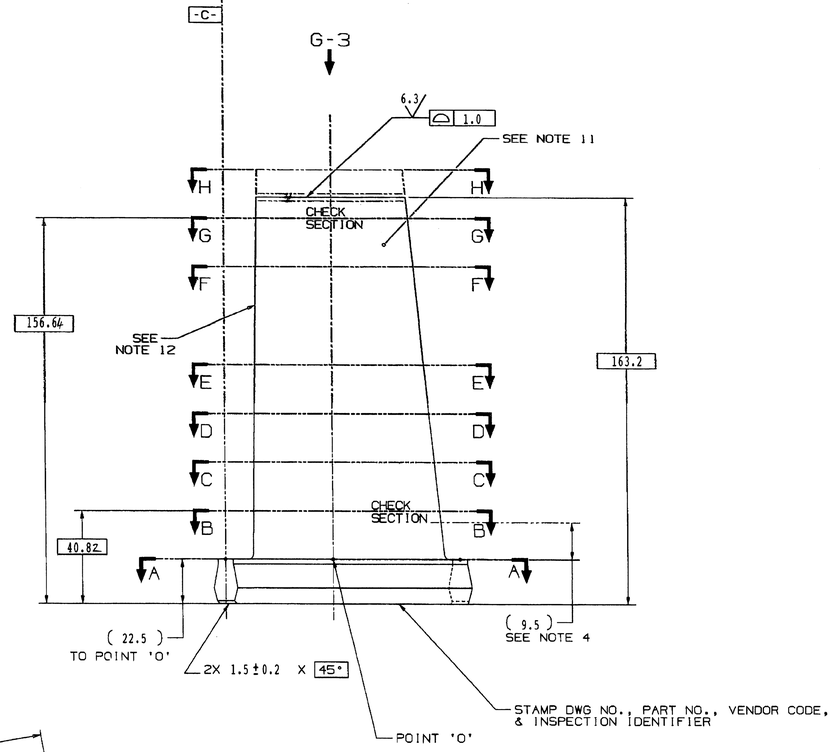

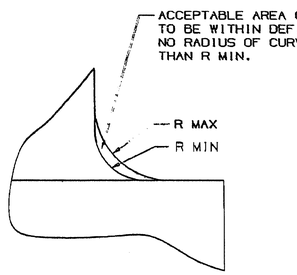

DETAIL D-8 (G-7)

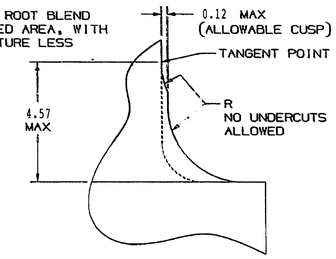

ALTERNATE METHOD OF MANUFACTURE
(REFER TO DETAIL D-8)

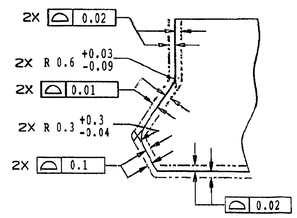

DETAIL D-5 (G-7)

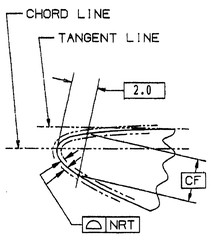

DETAIL B-8 (C-6)
(LEADING EDGE)

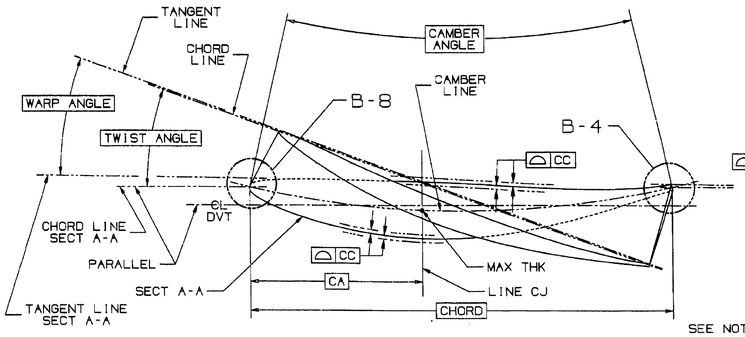

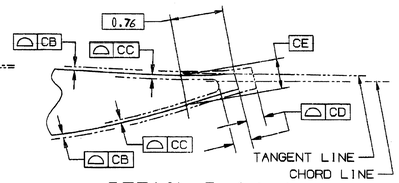

DETAIL B-4 (C-5)
(TRAILING EDGE)

SEE NOTES 9 & 10

SECTION	SECTION HEIGHT	CHORD	PERCENT THICKNESS	CAMBER ANGLE	TWIST ANGLE	WARP ANGLE	THICKNESS AT 'CA'	CA	CB	CC	CD	CE	CF	NRT
A-A	00.00	92.53	16.300	18.800	.000	.000	15.07	37.01	0.12	0.25	0.92	1.78	4.3	0.17
B-B	18.29	92.53	14.833	17.400	2.300	1.921	13.72	37.01	0.114	0.23	0.92	1.62	3.92	0.14
C-C	27.43	92.53	14.100	16.700	3.300	2.733	13.04	37.01	0.11	0.22	0.92	1.54	3.73	0.13
D-D	54.86	92.53	11.900	14.800	5.700	4.516	11.00	37.01	0.09	0.18	0.92	1.3	3.15	0.09
E-E	82.3	92.53	9.700	13.200	7.600	5.737	8.97	37.01	0.07	0.15	0.92	1.06	2.57	0.076
F-F	109.73	92.53	8.425	11.900	9.200	7.039	7.79	37.01	0.066	0.13	0.92	0.92	2.23	0.076
G-G	134.11	92.53	7.300	11.000	10.400	7.920	6.75	37.01	0.056	0.11	0.92	0.8	1.93	0.076
H-H	146.3	92.53	6.734	10.600	10.800	8.156	6.23	37.01	0.05	0.1	0.92	0.74	1.78	0.076

MATING PART REFERENCE DATA	
POINT 'O' Ø	1612.3
RIM ANGLE	.000
DOVETAIL ANGLE	37.400

IT.	NOMENCLATURE	IDENT	BHEL SPEC
7	COATING, ALUMINUM-INORGANIC	P18A-A93	GT10125
6	COATING, ALUMINUM-INORGANIC	P18A-A95	GT10606
5	ACPT REOT-BLADES & VANES	P29A-A9900	GT10128
4	COMPR VANES-PROCESSING	P3C-A980	GT10083
3	X-Y COORDS	287A7867	GT10661
2	APPLICABLE DWG NOTES	314A5112	GT10459
1	APPLIED PRACTICES	348A9200	HY230261

LIST OF COMPLEMENTARY DOCUMENTS

TYPE OF PRODUCT OR NAME OF CUSTOMER/PROJECT: FRAME - 9

	NAME	SIGN.	DATE	NO. OF VAR.
DRN.	SCS		4.1.2000	
CHK.	SKR		4.1.2000	NA
APPD.	SSR		4.1.2000	

DEPT. STD CODE: 423 | UNTOL. DIMS. GR. 6/N/H | SCALE NA | WEIGHT (KG) 1.6 | REF. TO ASSY. DRG. NA | ITEM NO. NA | NO. OF ITEMS NA

TITLE: BLADE ROTOR STG 17

CARD CODE | DRAWING NO. 0-353-05-91012 | REV. 00 | SHT. No 1 | NO OF SHT. 1

REV.	DATE	ALTERED CHD/APPD	ZONE

THE INFORMATION ON THIS DOCUMENT IS NOT BE USED DIRECTLY OR INDIRECTLY IN

GENERAL DIMENSIONAL LIMITS,FITS & TOLERANCES AS PER HY0230261

SGN. AND DATE | REF. DRG. NO. 10353134 REF'-1 | COMPUTER FILE NAME 10353134 REF'-1 | INVENTORY NO

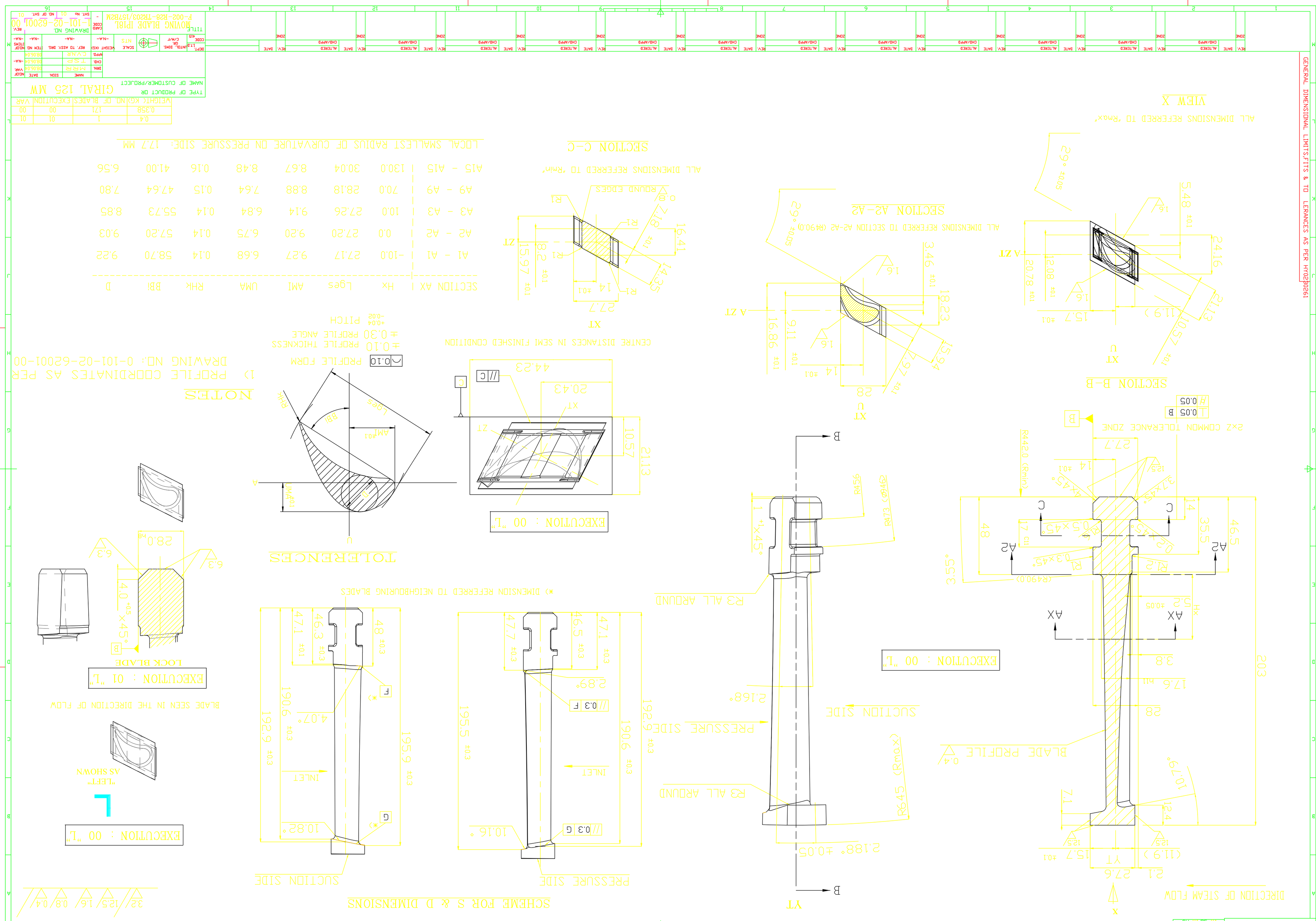
GENERAL DIMENSIONAL LIMITS,FITS & TO LERANCES AS PER HY02B0261
ALL DIMENSIONS REFERRED TO "Rmax"
VIEW X
SECTION B-B
SECTION A2-A2
ALL DIMENSIONS REFERRED TO SECTION A2-A2 (R490.0)
SECTION C-C
ALL DIMENSIONS REFERRED TO "Rmin"
LOCAL SMALLEST RADIUS OF CURVATURE ON PRESSURE SIDE: 17.7 MM
2×Z COMMON TOLERANCE ZONE
DIRECTION OF STEAM FLOW
BLADE PROFILE
SUCTION SIDE
PRESSURE SIDE
R3 ALL AROUND
EXECUTION : 00 "L"
CENTRE DISTANCES IN SEMI FINISHED CONDITION
EXECUTION : 00 "L"
TOLERANCES
NOTES
1) PROFILE COORDINATES AS PER DRAWING NO: 0-101-02-62001-00
PROFILE FORM
±0.10 PROFILE THICKNESS
±0.30 PROFILE ANGLE
+0.04 -0.02 PITCH
SCHEME FOR S & D DIMENSIONS
*) DIMENSION REFERRED TO NEIGHBOURING BLADES
EXECUTION : 01 "L"
LOCK BLADE
BLADE SEEN IN THE DIRECTION OF FLOW
EXECUTION : 00 "L"
"LEFT" AS SHOWN
TYPE OF PRODUCT OR NAME OF CUSTOMER/PRODUCT
GIRAL 125 MW
TITLE
MOVING BLADE IP18L
DRAWING NO.
P-002-R28-TR2203/167282M
L-101-02-62001 00
SCALE 1:5
WEIGHT (KG)
0.358
NO. OF BLADES
121
EXECUTION
00
FIRST ANGLE PROJECTION
(ALL DIMENSIONS ARE IN mm)
DRG. NO. L-101-02-62001
SH. 01 OF 01

FIRST ANGLE PROJECTION

(ALL DIMENSIONS ARE IN mm)

DRG. NO. 1-10306-41006

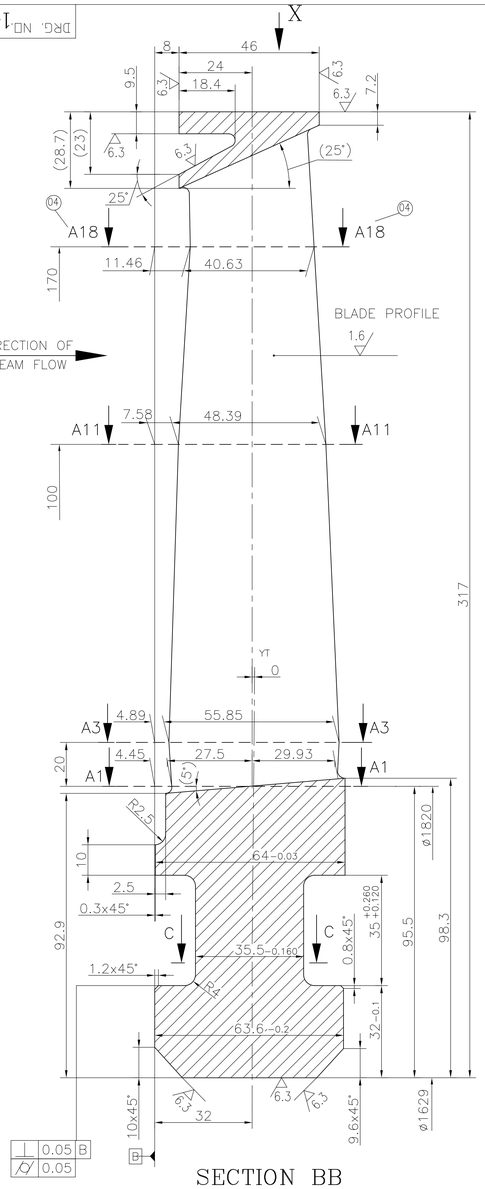

SECTION BB

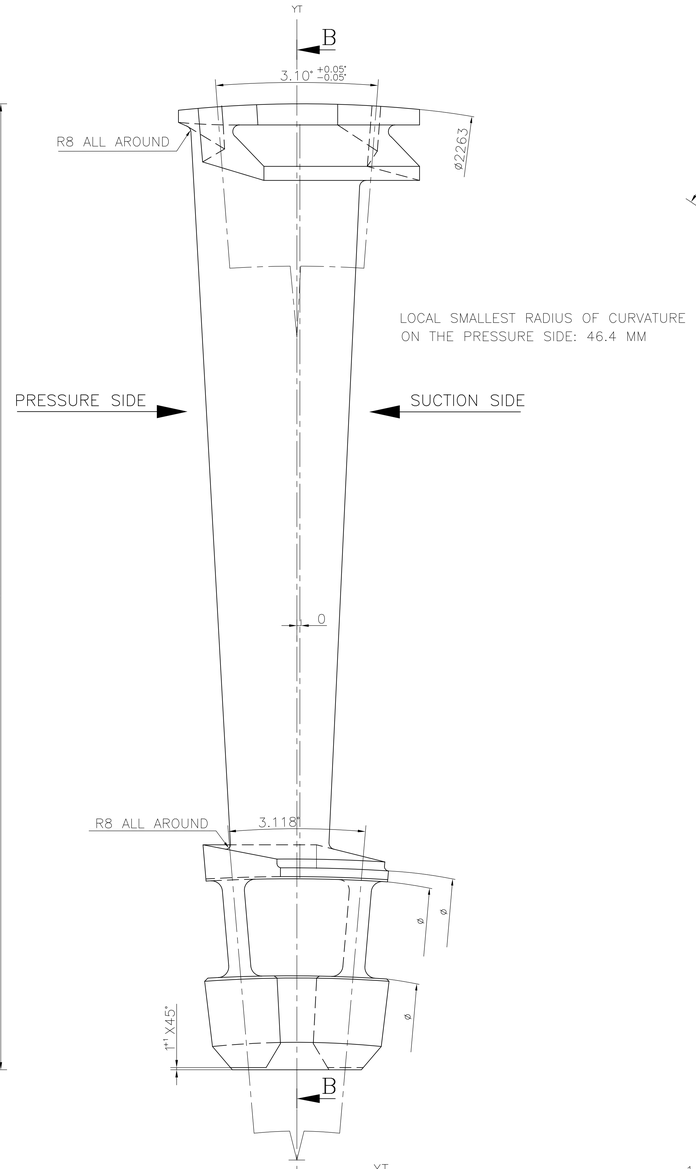

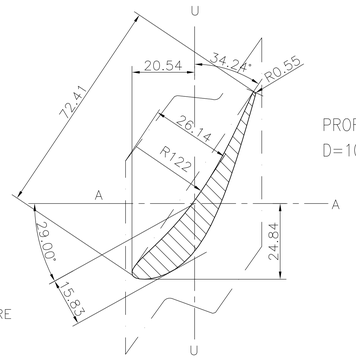

PROFILE THICKNESS
D=10.71

SECTION A18A18

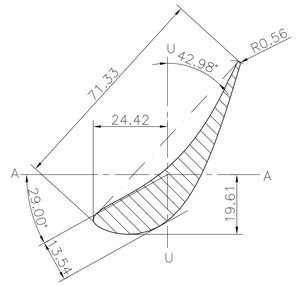

PROFILE THICKNESS
D=14.11

SECTION A11A11

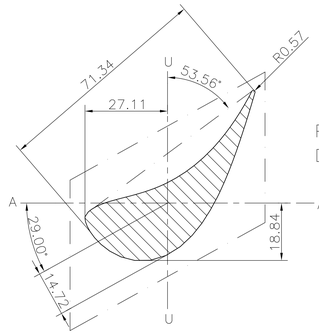

PROFILE THICKNESS
D=22.24

SECTION A3A3

3.2 ALL OVER EXCEPT OTHERWISE STATED

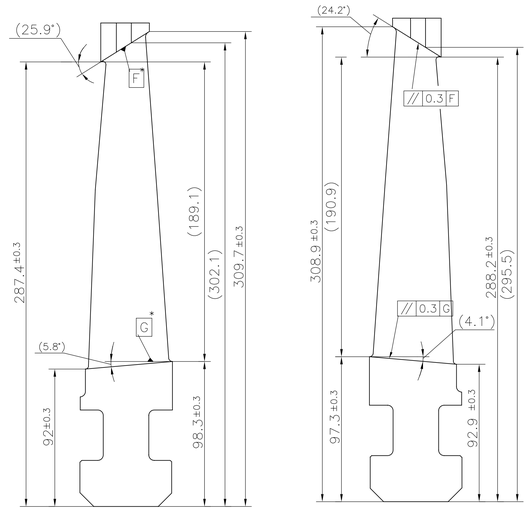

DIMENSION FOR

SUCTION SIDE PRESSURE SIDE

* WITH RESPECT TO THE NEIGHBOURING (ADJACENT) BLADE

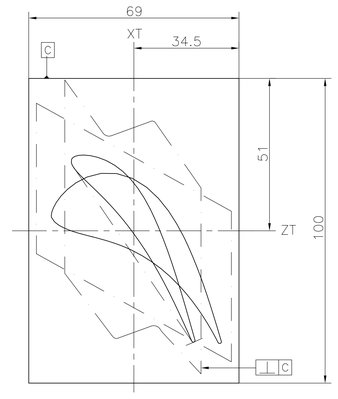

SEMI FINISHED IN CENTER POSITION

TECHINICAL REQUIREMENTS:

1. TOLERENCES
   - 0.25 PROFILE FORM
   - ±0.25 PROFILE THICKNESS
   - +0.25 -0.50 PROFILE LENGTH
   - ±0.30 PROFILE ANGLE
   - ⊕ 0.20 U A SHIFTING OF CENTRE POSITION
2. PROFILE DRG. NO. 01030641021
3. NO. OF BLADE/ROW 116 (INCLUDING LOCK BLADE)

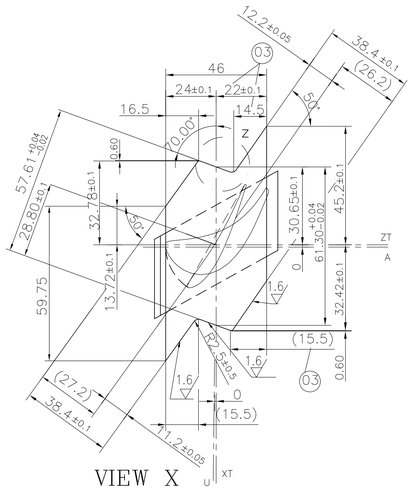

VIEW X

ALL DIMENSION CORRESPONDS TO ø2263

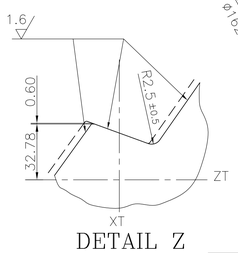

DETAIL Z

ROUND EDGES 0.63

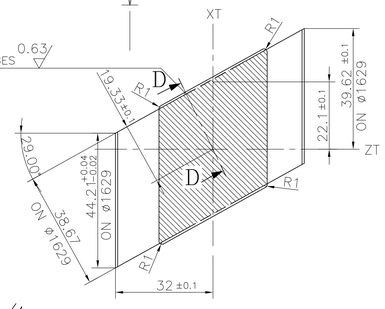

SECTION DD

SECTION CC

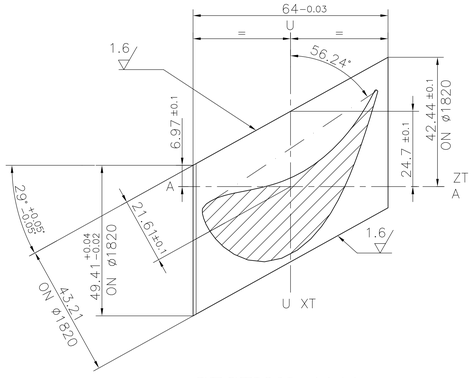

SECTION A1A1

SUPERSEDES OLD DRAWING UNDER THE SAME NUMBER

R

GRADE OF UNTOL.DIM
M/CG.-℄/M/F AA0230208
WELDING-A/B/℄/P AA0621104
GAS CUTTING-'T3'AA0621101

~~GMS No.~~ / C.B.O.M.- NO. 11030641000			STATUS OF DRG
AGREED DEPT	NAME	SIGN	DATE
TBM	B.DAS	Sd/-	21.5.99

TYPE OF PRODUCT OR NAME OF CUSTOMER/PROJECT: STEAM TURBINE

BHARAT HEAVY ELECTRICALS LTD. RANIPUR, HARDWAR

	NAME	SIGN	DATE	NO. OF VAR
DRN	HANS LAL	Sd/-	3.9.98	
CHD	P.K.BANSAL	Sd/-	4.9.98	
APPD	T.K.GHOSH	Sd/-	16.7.99	73 74

DEPT STE	SCALE	WEIGHT (KG)	REF. TO ASSY. DRG.	ITEM No.	NO. OF ITEMS
CODE 4011	N.T.S.	3.100	11030641000	–	75 77

TITLE : MOVING BLADE 3R F133-69/74-220-56.24°

CARD CODE

DRAWING NO. 1-10306-41006 (7 22 23 24)

SHEET No. 1 No. OF SHEETS 1

REV	DATE	ALTERED HANS LAL Sd/- CHECKED P.K.BANSAL Sd/-
04	9.7.05	-IN SECTION BB A18-A18 WAS A16-A16 (STE-05-F0139)
03	4.5.04	ALTERED HANS LAL Sd/- CHECKED P.K.BANSAL Sd/- -IN VIEW X DIMENSIONS 22, 14.5 & 15.5 WAS 24, 16.5 & 15.97 RESPECTIVELY. (STE-04-F0133)
02	5.12.03	ALTERED HANS LAL Sd/- CHECKED P.K.BANSAL Sd/- 4. IN SECTION A1A1 -PITCH TOLERANCES ADDED ON DIMENSIONS 49.41,21.61,6.97,24.7 & 42.44 -ON ANGLE 29°, TOLERANCE ±0.05° ADDED 5. IN SECTION CC -PITCH TOLERANCES ADDED ON DIMENSIONS 44.21,19.33,22.1 & 39.62 (STE-03-F1301)
02	5.12.03	ALTERED HANS LAL Sd/- CHECKED P.K.BANSAL Sd/- 1. TAPER VALUE TABLE DELETED 2. IN T.R. -TOLERANCE ON PROFILE CAHNGED FROM ±0.25 -TOLERANCE ON PITCH DELETED -TOLERANCE ON SHIFTING OF CENTRE ADDED 3.TOLERANCE ON TAPER ANGLE 3.10' ADDED (STE-03-F1301)
01	05.07.2002	ALTERED HANS LAL Sd/- CHECKED P.K.BANSAL Sd/- THIS DRAWING SUPERSEDES UNDER THE SAME NUMBER WITHOUT ANY CHANGE. REVISED DRAWING DEPOSITED IN AWC SERVER. (STE-02-1115)

THE INFORMATION ON THIS DOCUMENT IS THE PROPERTY OF BHARAT HEAVY ELECTRICALS LIMITED.
IT MUST NOT BE USED DIRECTLY OR INDIRECTLY IN ANY WAY DETRIMENTAL TO THE INTREST OF THE COMPAY

INVENTORY NO | SIGN. AND DATE | REF. DRG. NO. 7629-34611

FIRST ANGLE PROJECTION

(ALL DIMENSIONS ARE IN mm)

DRG. NO. 1-10518-41008

3.2 ALL OVER EXCEPT OTHERWISE STATED

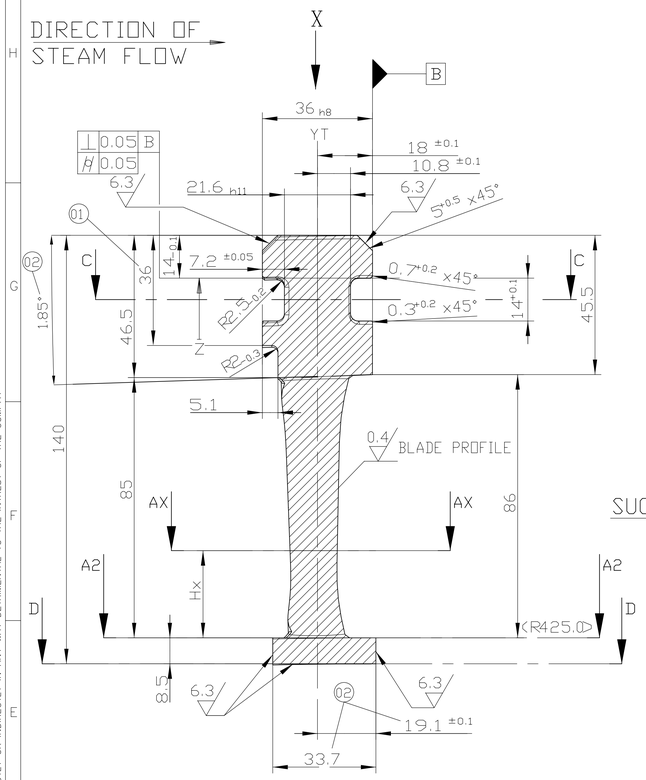

SECTION BB

DESIGN: VAR 01 "R"

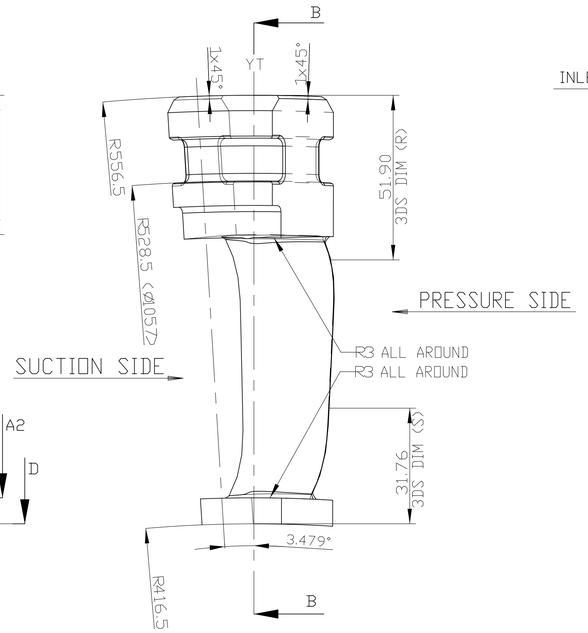

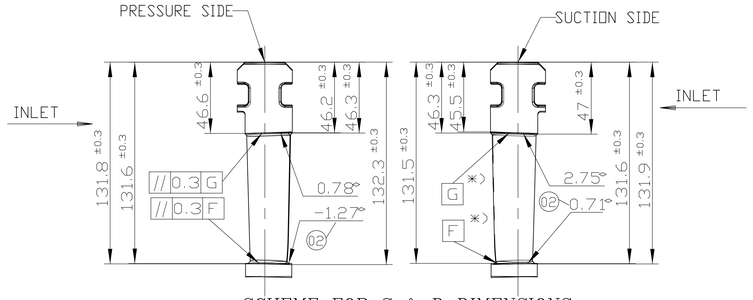

SCHEME FOR S & D DIMENSIONS

(SCALE 1:2)

*) REFERRED TO ADJECENT BLADES

R

"RIGHT" AS SHOWN

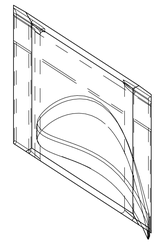

DESIGN: VAR 01 "R"

BLADE SEEN IN THE DIRECTION OF STEAM FLOW

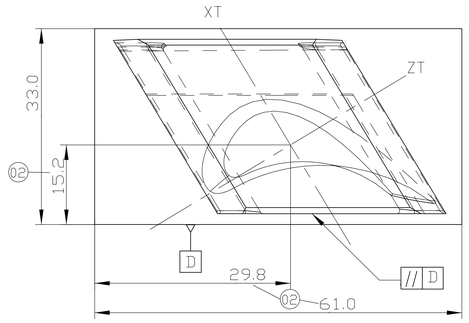

CENTRE DISTANCES IN SEMI FINISHED CONDITION

DESIGN: VAR 01 "R"

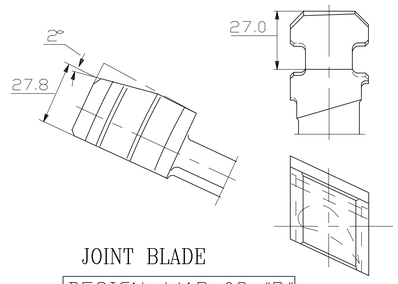

JOINT BLADE

DESIGN: VAR 02 "R"

JOINT BLADE (2 PIECES) MADE BY REWORKING ON GUIDE BLADE DESIGN: VAR 01 "R"

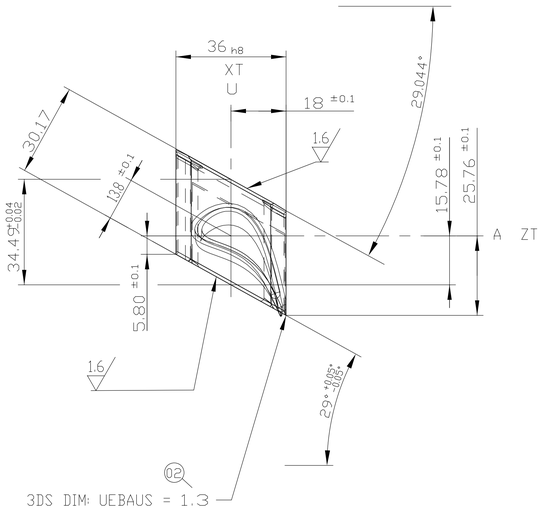

VIEW X

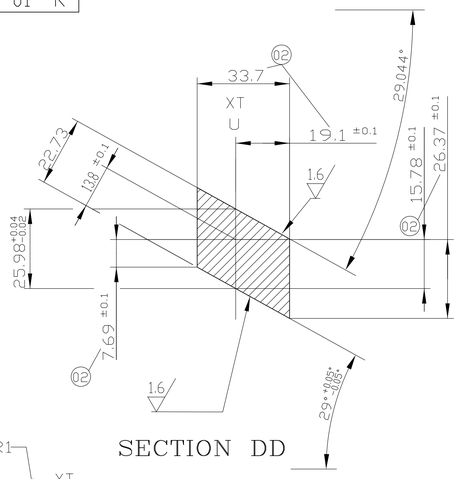

SECTION DD

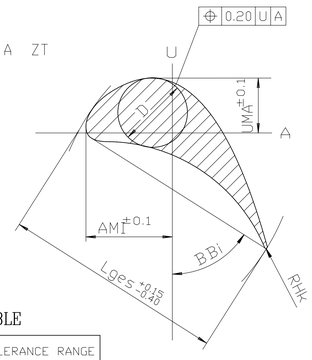

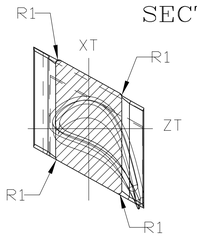

SECTION CC

SECTION AX	Hx	Lges	AMI	UMA	RHk	BBi	D
A1 - A1	-10.0	31.73	9.26	13.90	0.17	51.40	10.22
A2 - A2	0.0	32.52	9.54	8.34	0.17	51.18	10.48
A5 - A5	9.0	33.23	9.80	4.84	0.18	50.98	10.71
A16-A16	42.0	35.81	10.72	3.96	0.19	50.25	11.54
A27-A27	75.0	38.32	11.61	5.78	0.21	49.42	12.35

LOCAL SMALLEST RADIUS OF CURVATURE ON PRESSURE SIDE: 20.8 MM

TOLERANCE TABLE

NOMINAL SIZE mm		TOLERANCE RANGE	
		h8	h11
ABOVE	UP TO	UPPER / LOWER	UPPER / LOWER
18	30	0 / -0.033	0 / -0.130
30	40	0 / -0.039	0 / -0.160
40	50	0 / -0.039	0 / -0.160

TECHNICAL REQUIREMENTS:

1. TOLERANCES:
   - 0.15 PROFILE FORM
   - ±0.15 PROFILE THICKNESS
   - ±0.30 PROFILE ANGLE
2. STRAK NUMBER: 30008
3. NUMBER OF BLADES/ROW: 102

REV	DATE	ALTERED / CHECKED

REV	DATE	ALTERED / CHECKED
02	09.09.2005	ALTERED SK GARG sd/- CHECKED PK BANSAL sd/- DIMENSIONS IN SECTION BB, S&D VIEW, SECTION DD, SEMIFINISHED CONDITION, AND VIEW X ARE REVISED AS PER CHANGE ADVICE (STE-05-F0191)
01	27.09.2004	ALTERED SK GARG sd/- CHECKED PK BANSAL sd/- IN 'SECTION BB' DIMENSION 36 WAS 32 (STE-04-F0258)

GRADE OF UNTOL.DIM
M/CG.-¢/M/f AA0230208
WELDING-A/B/¢/D AA0621104
GAS CUTTING-'T3'AA0621101

~~GMS No.~~ / C.B.O.M.- NO. 21051841000

AGREED DEPT	NAME	SIGN	DATE
TBM	A. M.	Sd/-	28.07.03

STATUS OF DRG U

TYPE OF PRODUCT OR NAME OF CUSTOMER/PROJECT: STEAM TURBINE

BHARAT HEAVY ELECTRICALS LTD. RANIPUR, HARDWAR

	NAME	SIGN	DATE
DRN	SK GARG	Sd/-	08.06.02
CHD	SK GARG	Sd/-	12.03.03
APPD	TK GHOSH	Sd/-	20.11.03

NO. OF VAR 73 74

DEPT STE
CODE 4011

SCALE NTS

WEIGHT (KG) 0.586

REF. TO ASSY. DRG. 21051841000

ITEM No. —

NO. OF ITEMS — 75 77

TITLE : GUIDE BLADE 8R
S008-S36-TR140.0/086.0A2S

CARD CODE

DRAWING NO. 7 1-10518-41008 22 23 24

SHEET No. 01 No. OF SHEETS 01

A1 SIZE

THE INFORMATION ON THIS DOCUMENT IS THE PROPERTY OF BHARAT HEAVY ELECTRICALS LIMITED.
IT MUST NOT BE USED DIRECTLY OR INDIRECTLY IN ANY WAY DETRIMENTAL TO THE INTREST OF THE COMPAY

INVENTORY NO | SIGN AND DATE | REF. DRG. NO.

FIRST ANGLE PROJECTION

(ALL DIMENSIONS ARE IN mm)

DRG. NO. 1-105-18-62003 SH.01 OF 01

DIRECTION OF STEAM FLOW

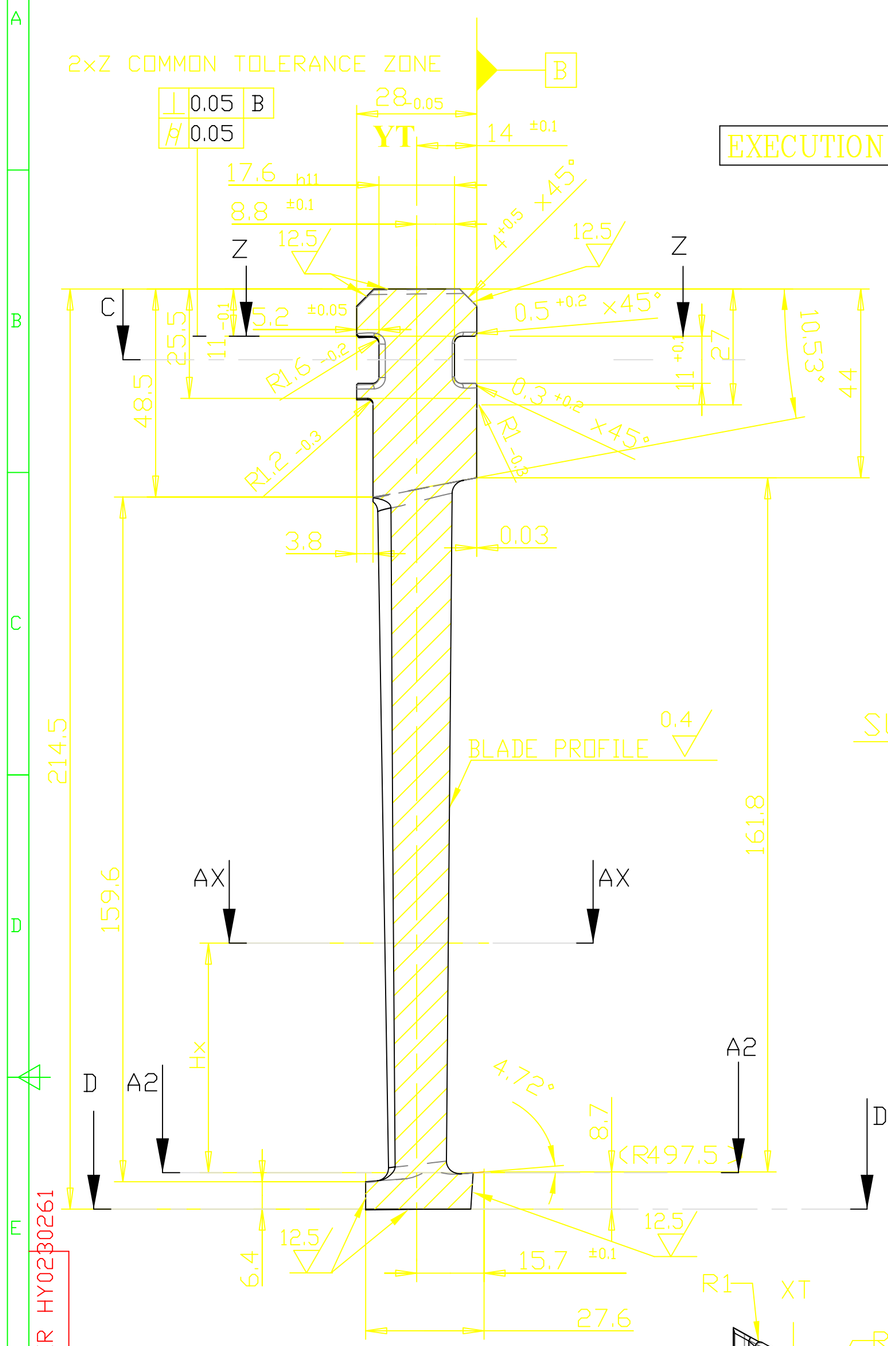

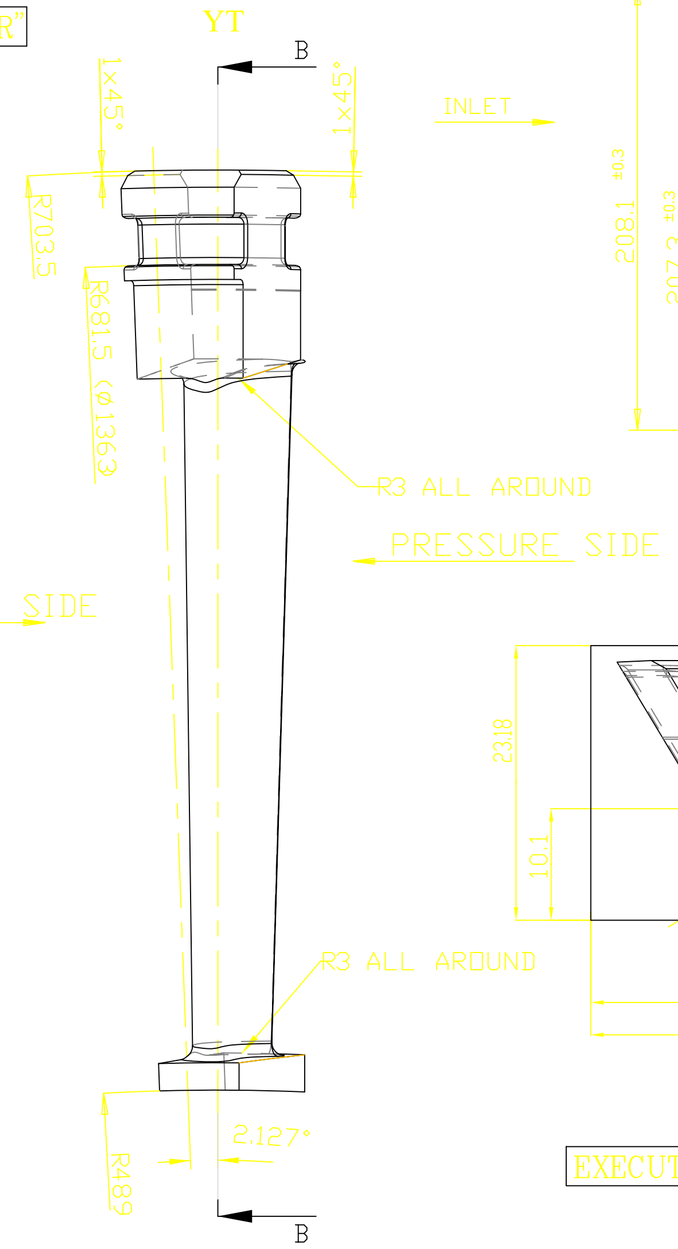

SCHEME FOR S & D DIMENSIONS

(SCALE 1:2)

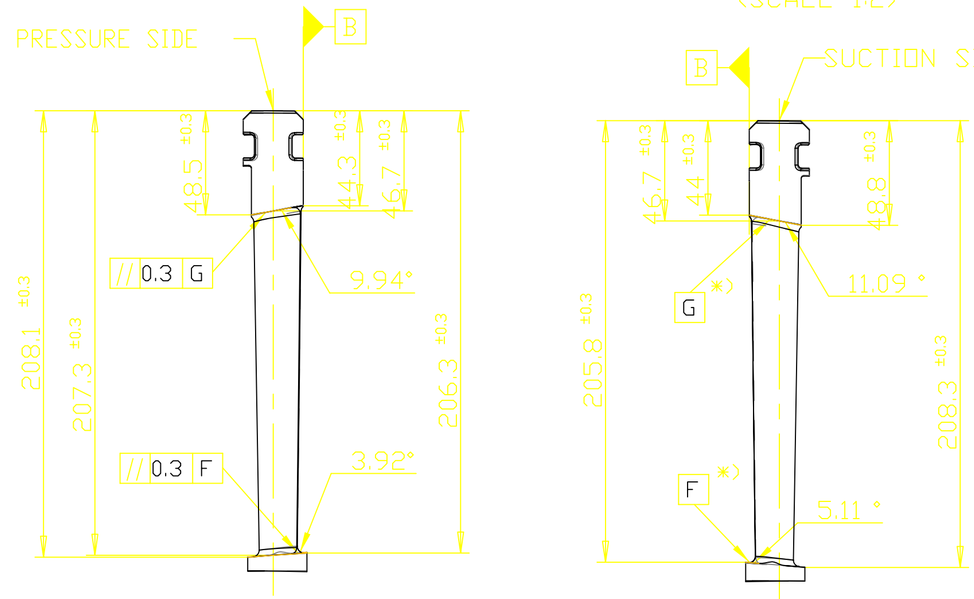

BLADE SEEN IN STEAM FLOW DIRECTION

EXECUTION : 00 "L"

L

"LEFT" AS SHOWN

EXECUTION : 02 "R"

R

"RIGHT" MIRROR INVERTED

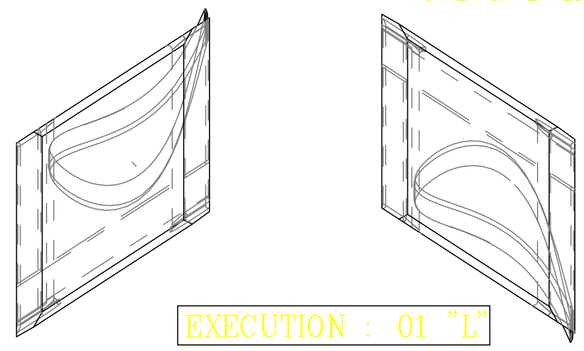

EXECUTION : 01 "L"

GUIDE BLADES AT JOINT PALNE (2 NO.) MADE BY REWORKING ON DESIGN: VAR 01 "L"

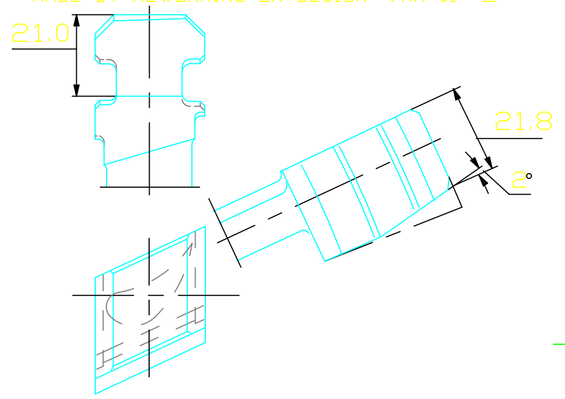

EXECUTION : 03 "R"

GUIDE BLADES AT JOINT PALNE (2 NO.) MADE BY REWORKING ON DESIGN: VAR 02 "R"

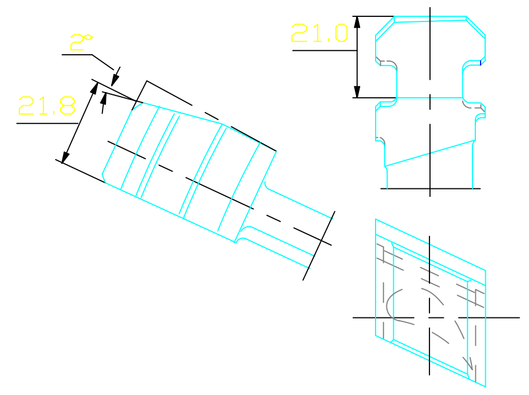

CENTRE DISTANCES IN SEMI FINISHED CONDITION

EXECUTION : 02 "R"

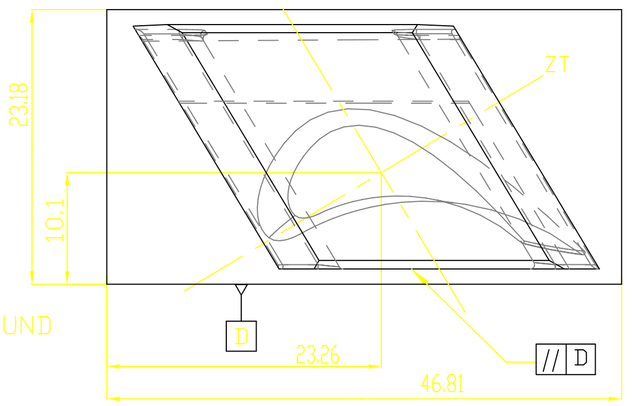

EXECUTION : 00 "L"

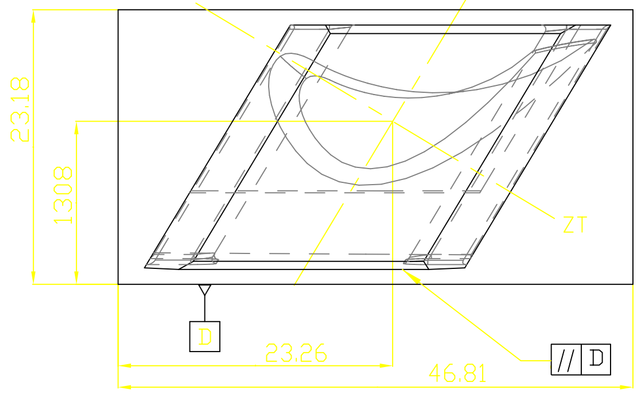

EXECUTION : 00 "L"

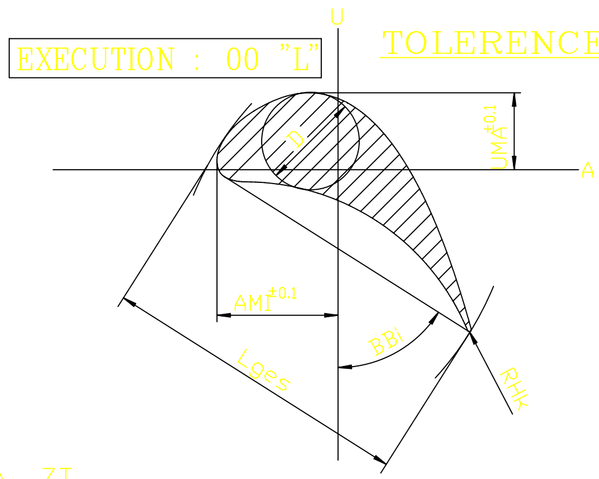

TOLERENCES

0.10 PROFILE FORM

± 0.10 PROFILE THICKNESS

± 0.30 PROFILE ANGLE

+0.04 −0.02 PITCH

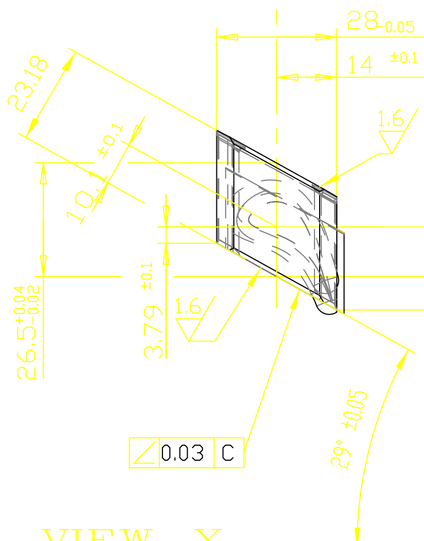

VIEW—X

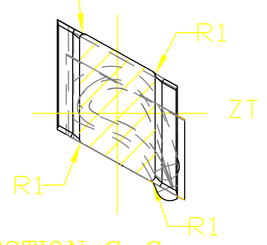

SECTION C-C

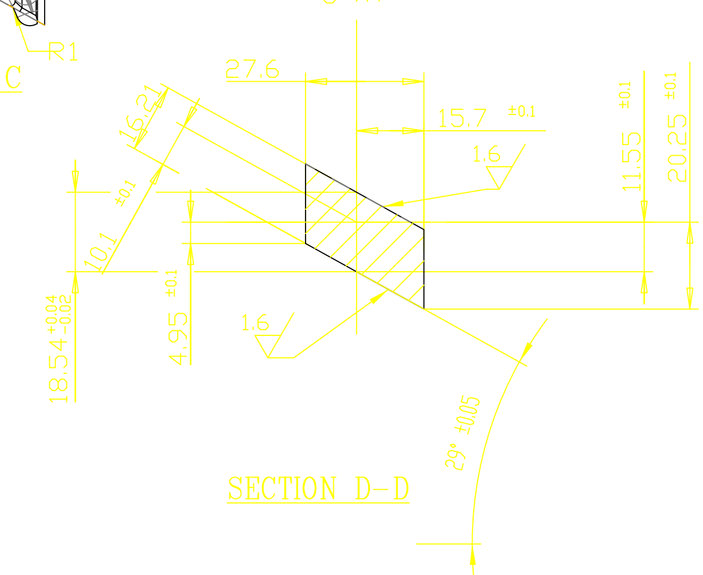

SECTION D-D

SECTION AX	Hx	Lges	AMI	UMA	RHk	BBi	D
A1 - A1	-10.0	22.57	6.39	5.74	0.12	52.50	7.27
A2 - A2	0.0	23.04	6.55	5.87	0.12	52.25	7.42
A3 - A3	10.0	23.51	6.72	6.00	0.13	52.01	7.57
A10 - A10	80.0	26.76	7.88	6.91	0.14	50.32	8.63
A17 - A17	150.0	30.02	9.01	7.83	0.16	48.64	9.68

LOCAL SMALLEST RADIUS OF CURVATURE ON PRESSURE SIDE: 14.8 MM

NOTES

1) PROFILE COORDINATES AS PER DRAWING NO.: 0-105-18-62003-00

WEIGHT(KG)	NO. OF BLADES	EXECUTION	VAR
0.426	2	03	03
0.426	166	02	02
0.426	2	01	01
0.426	166	00	00

TYPE OF PRODUCT OR NAME OF CUSTOMER/PROJECT: GIRAL 125 MW

	NAME	SIGN.	DATE	NO.OF VAR.
DRN.	MRR		09.06.04	-N.A-
CHD.	TSP		09.06.04	
APPD.	CNVR		09.06.04	

DEPT. I.T.D CODE 415	UNTOL. DIMS. GR. C/M/F		SCALE NTS	WEIGHT (KG) -N.A-	REF. TO ASSY. DRG. -N.A-	ITEM NO. -N.A-	NO.OF ITEMS -N.A-

TITLE: GUIDE BLADE IP 20L F005-S28-TR214/162B2M

CARD CODE N.A.

DRAWING NO. 1-105-18-62003 REV. 00

SHT. No 01 NO. OF SHT. 01

GENERAL DIMENSIONAL LIMITS,FITS & TOLERANCES AS PER HY028261

ALTERED	REV.	DATE	ALTERED	REV.	DATE	ALTERED	REV.	DATE	ALTERED	REV.	DATE	ALTERED	REV.	DATE	ALTERED	REV.	DATE	ALTERED	REV.	DATE	ALTERED
CHD/APPD	ZONE		CHD/APPD	ZONE		CHD/APPD	ZONE		CHD/APPD	ZONE		CHD/APPD	ZONE		CHD/APPD	ZONE		CHD/APPD	ZONE		CHD/APPD

SIGN AND DATE | REF. DRG. NO. | COMPUTER FILE NAME | INVENTORY NO

FIRST ANGLE PROJECTION

(ALL DIMENSIONS ARE IN mm)

SH. 01 OF 01 DRG. NO. 1-301-81-00001

SECTION B-B

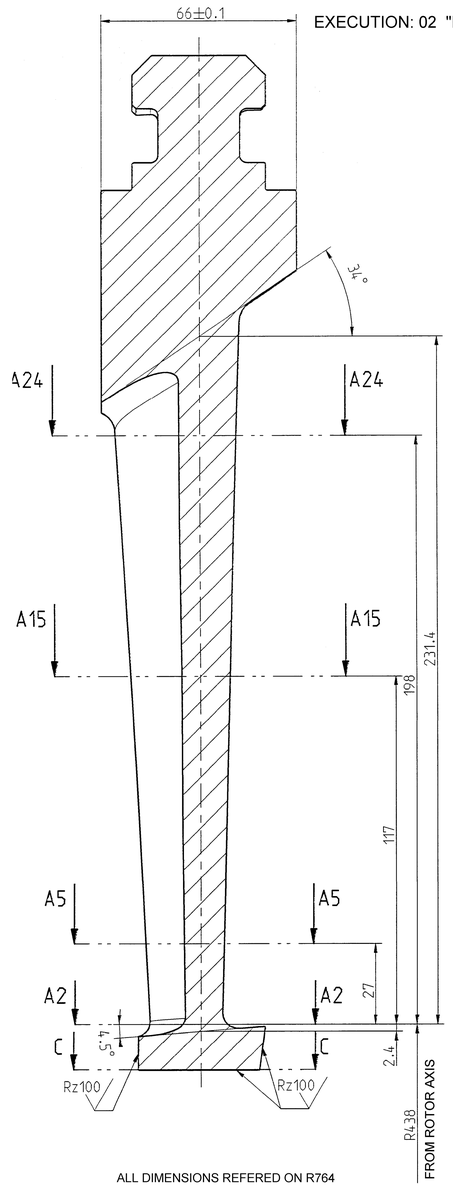

POS : 1

EXECUTION: 02 "R"

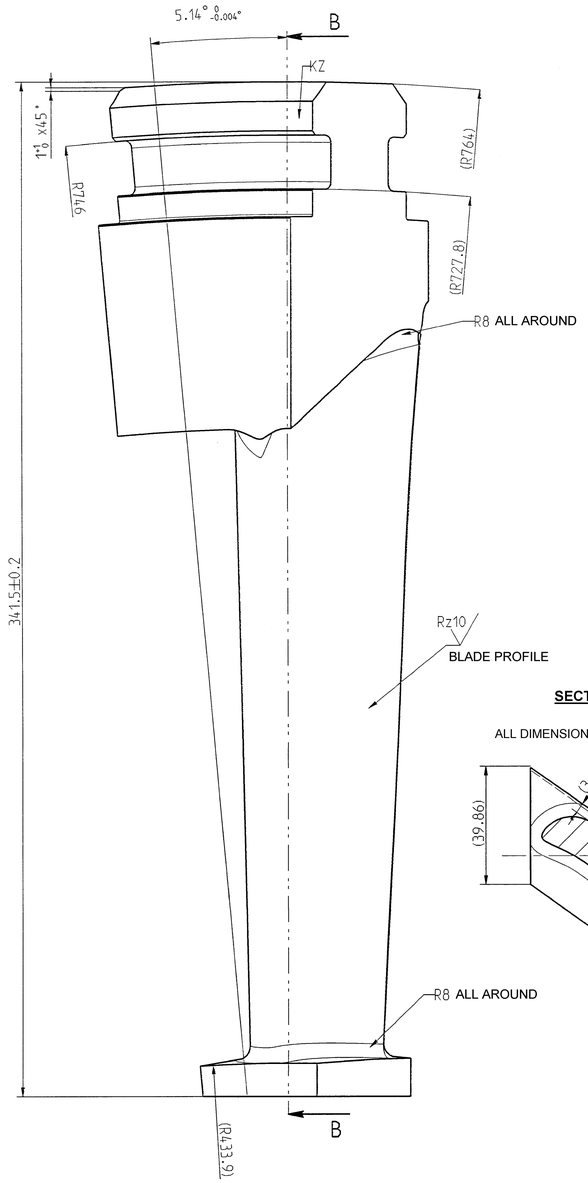

SCHEME OF DIMENSIONS

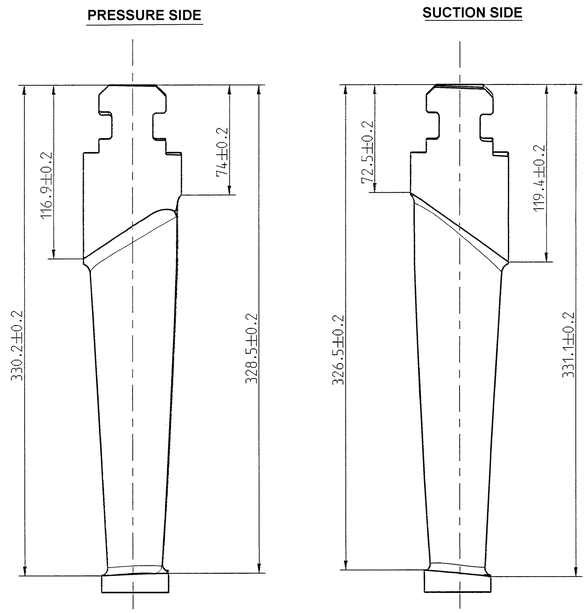

Rz16 = 0.8 (Rz10 = 0.8 Rz100 = 12.5)

L — EXECUTION: 00 "L" — LEFT

R — EXECUTION: 02 "R" — RIGHT

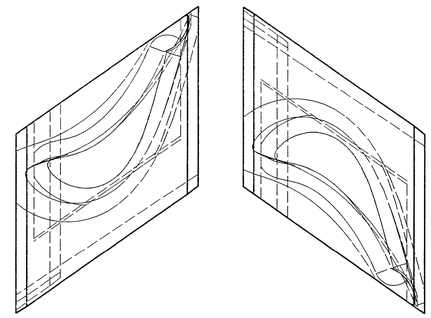

POS : 2

GUIDE BLADES AT JOINT PLANE(2PCS)
MADE BY REWORKING ON NORMAL GIUDE BLADE

EXECUTION: 01 "L"

EXECUTION: 03 "R"

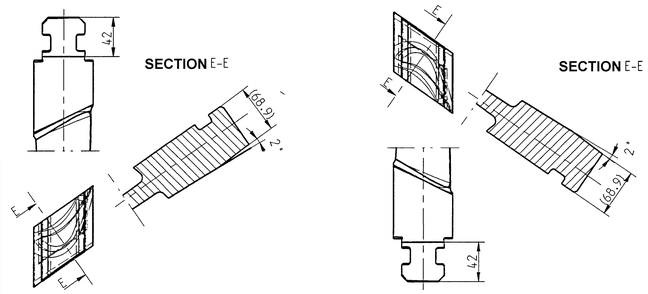

SECTION A2-A2

ALL DIMENSIONS REFERED ON R438

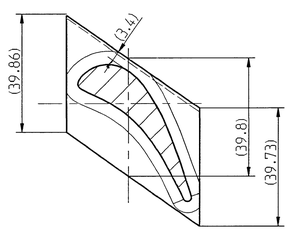

EY VALUE FOR 250mm SINE BAR LENGTH	
FOR LEFT VAR 00 & 01	FOR RIGHT VAR 02 & 03
EX= 6.4890	EX= 6.4985
EY=18.5403	EY= 18.5403

BLADE ROOT DETAIL

√Ra25 = 1.6 (√Ra16 = 0.8)

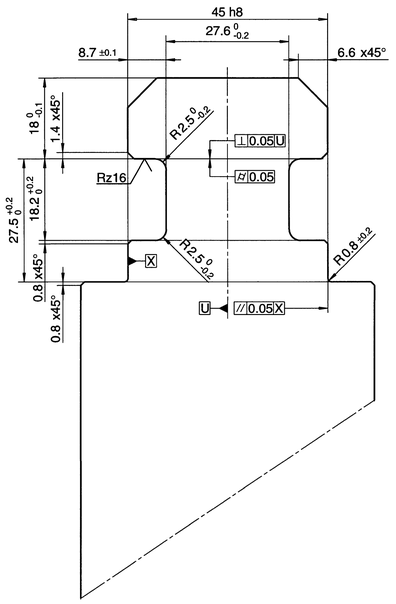

ALL DIMENSIONS REFERED ON R764

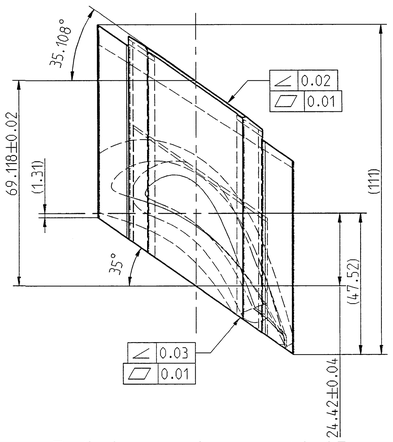

SECTION C-C

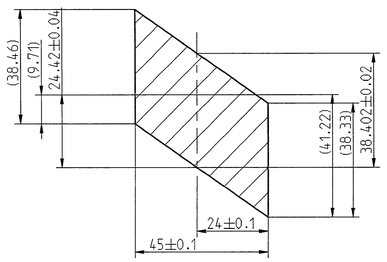

PROFILE TOLERANCES FOR THE PROFILE SECTION A5, A15, A24.

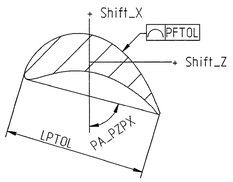

PFTOL	0.25
Shift_X	+0.50 -0.25
Shift_Z	+0.50 -0.25
PA_PZPX	±0.25°
LPTOL	+0.25 -0.50

NOTES:

1. Profile co-ordinates as per drawing No: 0-301-81-00001-00
2. Profile checking sections: A5, A15, A24.
3. Final Machining as per Blading Plan.
4. Total No. of Blade = 70.

FLAT 125X80 X20Cr13V HY10764	2	03	03
	68	02	02
	2	01	01
	68	00	00
Description	No. of Blades	Execution	Var

TYPE OF PRODUCT OR

NAME OF CUSTOMER/PROJECT

LIMITED

	NAME	SIGN	DATE	NO OF VAR
DRN	HARISH		14.05.06	NA
CHD	TS PRABHAKAR		14.05.06	
APPD	CNV RAMANA		14.05.06	

DEPT ITD	UNTOL DIMS OR ¢/M/f		SCALE	WEIGHT (KG)	REF TO ASSY DRG	ITEM NO	NO OF ITEMS
CODE 415			NTS	3.7	NA	NA	NA

TITLE **LP GUIDE BLADE-2 (SL 2.2 SQM)**

CARD CODE

DRAWING NO. **1-301-81-00001** REV 00

SHT No 01 NO OF SHT 01

THE INFORMATION ON THIS DOCUMENT IS THE NOT BE USED DIRECTLY OR INDIRECTLY IN ANY

GENERAL DIMENSIONAL LIMITS,FITS & TOLERANCES AS PER HY0230261

INVENTORY NO | SIGN AND DATE | REF | DRG NO 0-2118-2202-10 | COMPUTER FILE NAME

FIRST ANGLE PROJECTION

(ALL DIMENSIONS ARE IN mm)

DRG. NO. 1-303-19-00019 SH. 01 OF 01

Pos No. 1

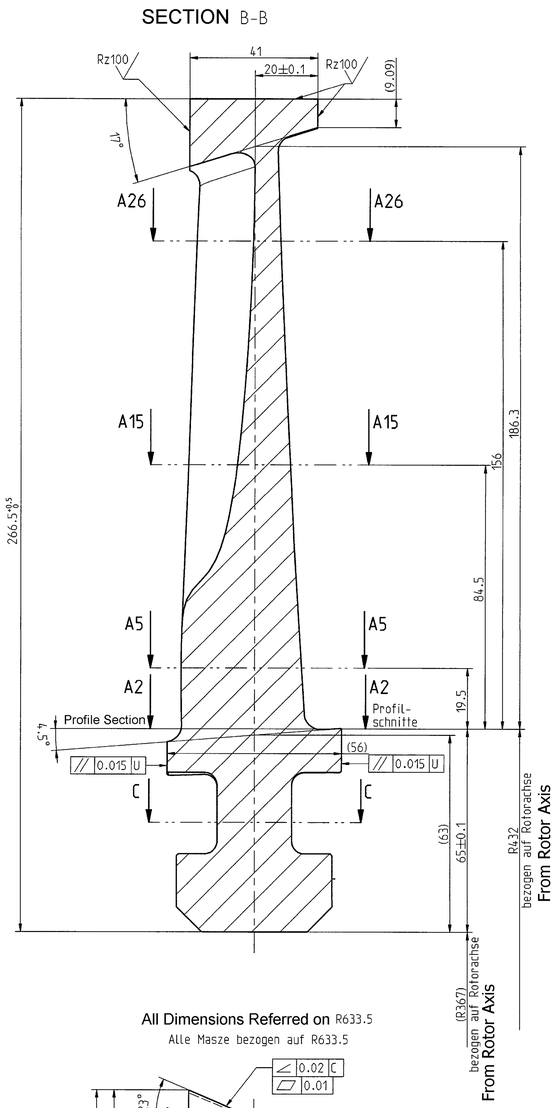

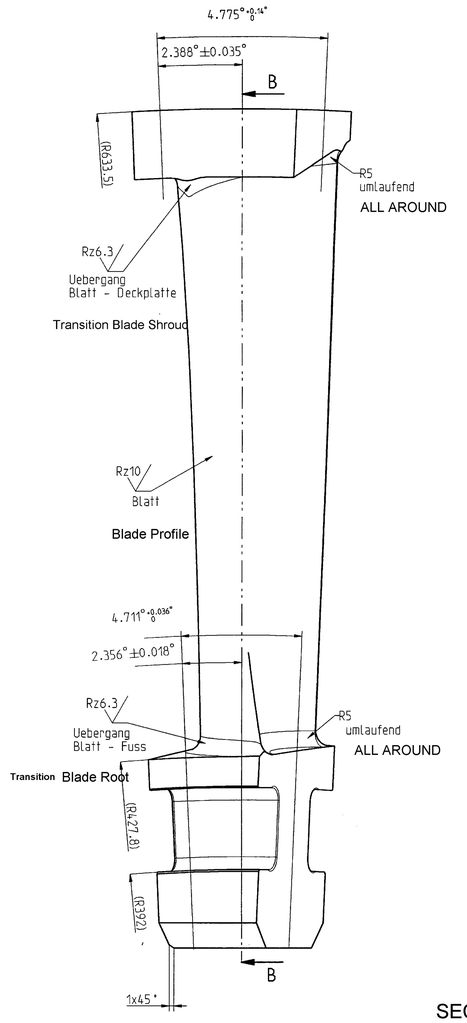

SCHEME OF DIMENSIONS

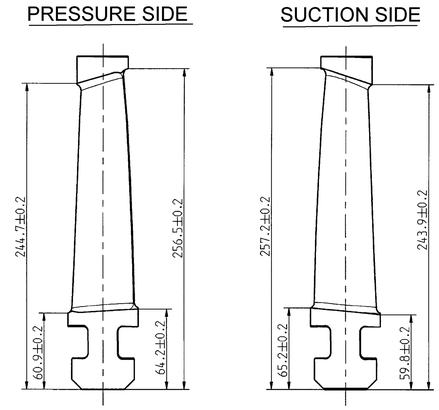

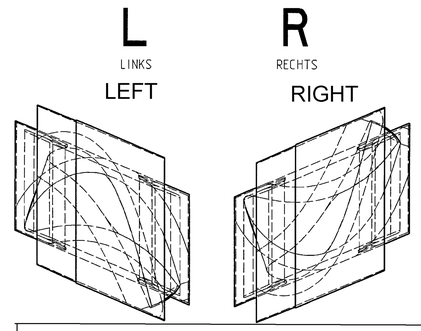

Endschaufeln **LOCK BLADE**

fehlende Maße Endschaufel
siehe Laufschaufel

Pos No. 2

Sachnummer	Drehrichtung
4-4920-2211-00	LINKS
4-4920-2201-00	RECHTS

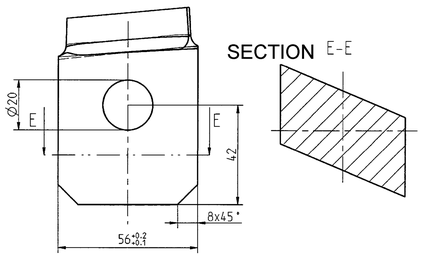

PROFILE TOLERANCE FOR THE CHECKING SECTIONS **AX-AX**

Profiltoleranzen
für die Prüfschnitte AX-AX

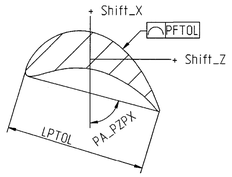

PFTOL	0.20
Shift_X	+0.40 -0.20
Shift_Z	+0.40 -0.20
PA_PZPX	±0.20°
LPTOL	+0.20 -0.40

ROOT DETAIL

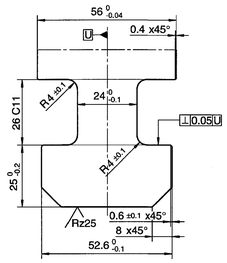

NOTES:

1. Profile co-ordinates a per Drg No. 0-303-19-00005-00.
2. Profile Checking Sections A5, A15,A26.
3. Final Machining as per Blading Plan.
4. Total No. of Blades including Lock Blade : 77 Pieces.
5. For 250mm Length Sin Bar: Ey for Half Angle = 9.579.
   Ey for Full Angle = 19.185.

All Dimensions Referred on R633.5
Alle Masze bezogen auf R633.5

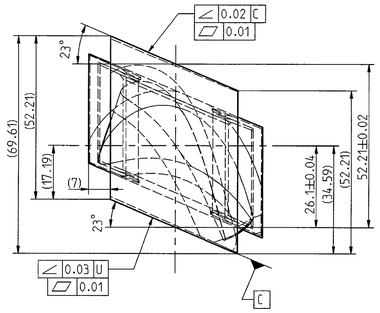

SECTION C - C
Alle Masze bezogen auf R367
All Dimensions Referred on R367

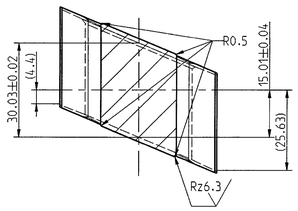

SECTION A2 - A2
Alle Masze bezogen auf R432
All Dimensions Referred on R432

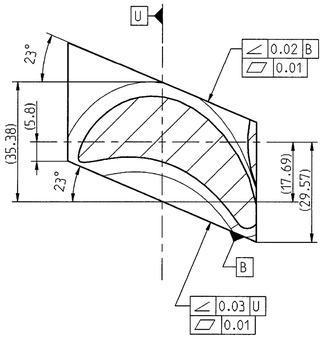

Rz 16 = 0.8, (Rz 6.3 = 0.4, Rz 10 = 0.8, Rz 25 = 1.6, Rz 100 = 12.5)

DESCRIPTION / MATERIAL SPEC	POS. NO.	DESCRIPTION	VAR
Flat 95X70 / X20Cr13V	2	Lock Blade-Right	03
	1	Normal Blade-Right	02
	2	Lock Blade-Left	01
	1	Normal Blade-Left	00

TYPE OF PRODUCT OR
NAME OF CUSTOMER/PROJECT

	NAME	SIGN	DATE	NO OF VAR
DRN	HARISH		08.09.07	NA
CHD	T.S.Prabhakar		08.09.07	
APPD	C.N.V.Ramana		08.09.07	

DEPT ITD CODE 415	UNTOL DIMS GR C/M/F	SCALE NTS	WEIGHT (KG) 1.56	REF TO ASSY DRG NA	ITEM NO NA	NO OF ITEMS NA

TITLE **L P MOVING BLADE- 1 (SL 2.2 SQM)**

CARD CODE

DRAWING NO. **1-303-19-00019** REV 00

SHT No 01 NO OF SHT 01

ALTERED	REV	DATE	ALTERED	REV	DATE	ALTERED	REV	DATE	ALTERED	REV	DATE	ALTERED	REV	DATE	ALTERED	REV	DATE	ALTERED	REV	DATE	ALTERED	REV	DATE	ALTERED
CHD/APPD			CHD/APPD			CHD/APPD			CHD/APPD			CHD/APPD			CHD/APPD			CHD/APPD			CHD/APPD			CHD/APPD
	ZONE			ZONE			ZONE			ZONE			ZONE			ZONE			ZONE			ZONE		

THE INFORMATION ON THIS DOCUMENT IS THE PROPERTY OF NOT BE USED DIRECTLY OR INDIRECTLY IN ANY WAY DETRIMENTAL

GENERAL DIMENSIONAL LIMITS, FITS & TOLERANCES AS PER HY0230261

INVENTORY NO | SIGN AND DATE | REF DRG NO 0-2128-2201-00 | REV-A | COMPUTER FILE NAME

FIRST ANGLE PROJECTION

(ALL DIMENSIONS ARE IN mm)

DRG. NO. 3-107-47-62023 | SH. 04 OF 04

3.2 / 0.8 / 1.6 / 12.5

VAR.	STAGE	QTY/ROW (Incl.J.B)	H	D1	D2	D3	D4	D5	D6	D7	αD DEG.	αD MIN.	γD DEG.	γD MIN.	S1	S2	S3	S4	S5	S6	S7
05	5	148	223.9	216.0	216.2	216.4	67.7	62.5	57.4	148.3	0	−42	17	51	216.3	216.1	216.0	68.1	62.6	57.2	147.9

VAR.	STAGE	αS DEG.	αS MIN.	γS DEG.	γS MIN.	E	øK	øN	øP	øI	L	Z	M	Q	QH	HT	EX (TAPER VALUES FOR JIG LENGTH 1000 *)	EY	EH
05	5	0	32	18	49	51.0	1552	1504	1419	1104.2	29.76	27.21	21.17	8.47	137.0	0.4	8.87	38.08	21.33

(* TAPER VALUE FOR PITCH INCREASE OF 0.40% RELATED TO øI)

TOLERANCES

0.15	PROFILE FORM
± 0.15	PROFILE THICKNESS
− 0.40	PROFILE LENGTH
0.45	BLADE BENDING
± 0.30 °	PROFILE ANGLE
± 0.30	S & D DIMENSIONS

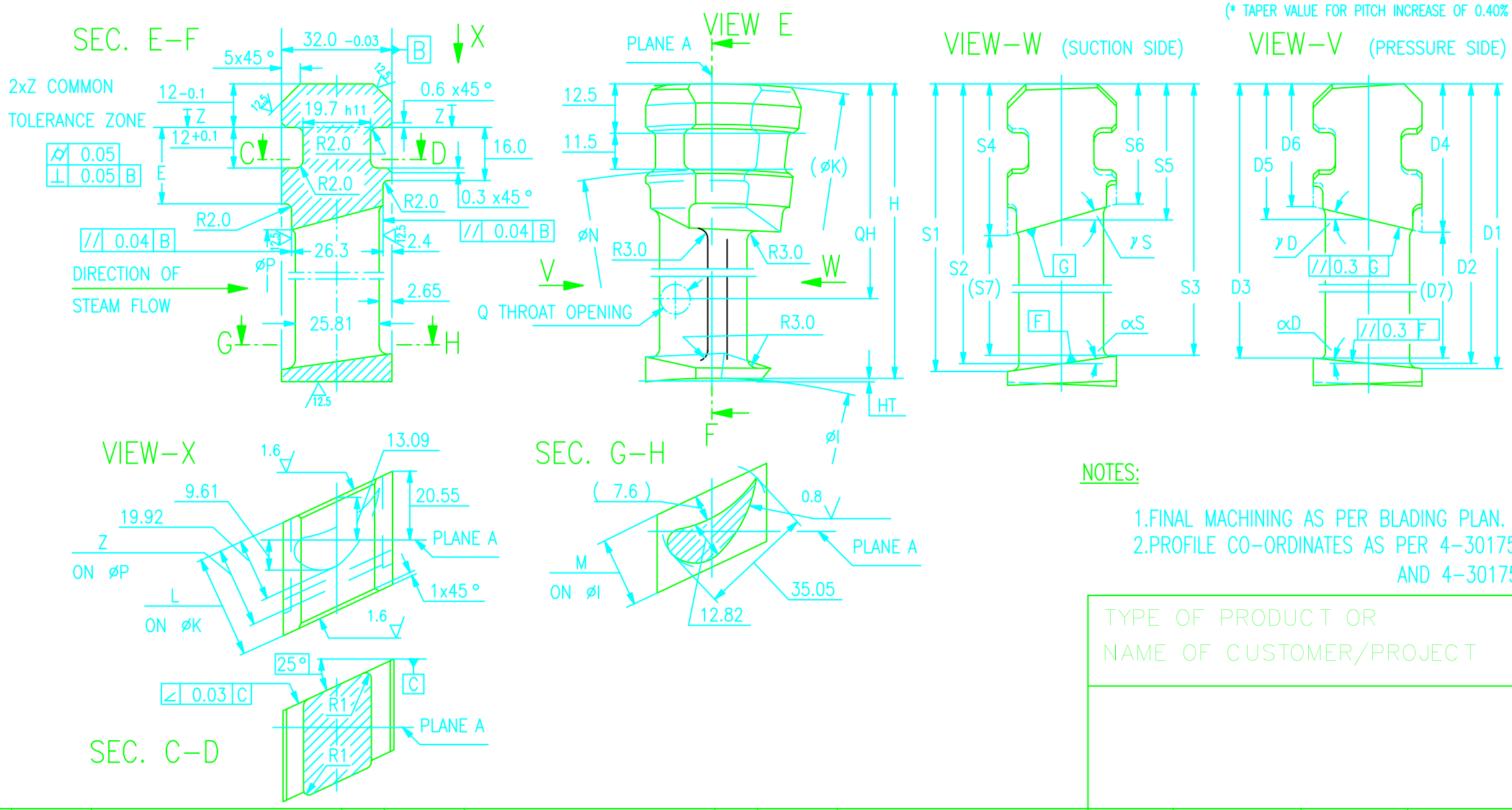

NOTES:

1. FINAL MACHINING AS PER BLADING PLAN.
2. PROFILE CO-ORDINATES AS PER 4-30175-00164-00 AND 4-30175-00168-00

05	5
VAR.	ROW

TYPE OF PRODUCT OR NAME OF CUSTOMER/PROJECT: JINDAL / GIPCL N30-2X3.2

	NAME	SIGN.	DATE
DRN.	T.V.P. BABU		10.01.96
CHD.	TS PRABHAKAR		10.01.96
APPD.	P KODANDARAM		10.01.96

NO. OF VAR.: −N.A.−

DEPT. I.T.D. | CODE 415 | UNTOL. DIMS. GR. ~~C/M/F~~ | SCALE NTS | WEIGHT (KG) −N.A.− | REF. TO ASSY. DRG. −N.A.− | ITEM NO. −N.A.− | NO. OF ITEMS −N.A.−

TITLE: GUIDE BLADE T4-32-53

CARD CODE N.A. | DRAWING NO. 3-107-47-62023 | REV. 00

SHT. No 04 | NO. OF SHT. 04

REV.	DATE	ALTERED CHD/APPD	REV.	DATE	ALTERED CHD/APPD	REV.	DATE	ALTERED CHD/APPD
ZONE			ZONE			ZONE		

GENERAL DIMENSIONAL LIMITS, FITS & TOLERANCES AS PER HY0230261

COMPUTER FILE NAME | REF. DRG. NO. | SIGN. AND DATE | INVENTORY NO

FIRST ANGLE PROJECTION

(ALL DIMENSIONS ARE IN mm)

DRG. NO. 3-107-47-62024

SH. 04 OF 04

3.2 / 0.8 / 1.6 / 12.5

VAR.	STAGE	HT	H	E	D1	D2	D3	D4	D5	D6	D7	αD DEG.	αD MIN.	γD DEG.	γD MIN.	S1	S2	S3	S4	S5	S6	S7
05	5	0.5	223.9	51.0	216.0	216.2	216.4	67.7	62.5	57.4	148.3	0	-42	17	51	216.3	216.1	216.0	68.1	62.6	57.2	147.9

VAR.	STAGE	αS DEG	αS MIN.	γS DEG	γS MIN.	øK	øN	øP	øI	L1	L2	L3	L4	L5	L6	L7	L8	L9	RD	SINE BAR VAL. FOR L=1000 (EY) POS 1	POS 2
05	5	0	32	18	49	1552	1504	1419	1104.2	7.8	38.0	11.6	30.5	40.11	48.43	57.85	34.0	40.6	25.4	17.96	76.74

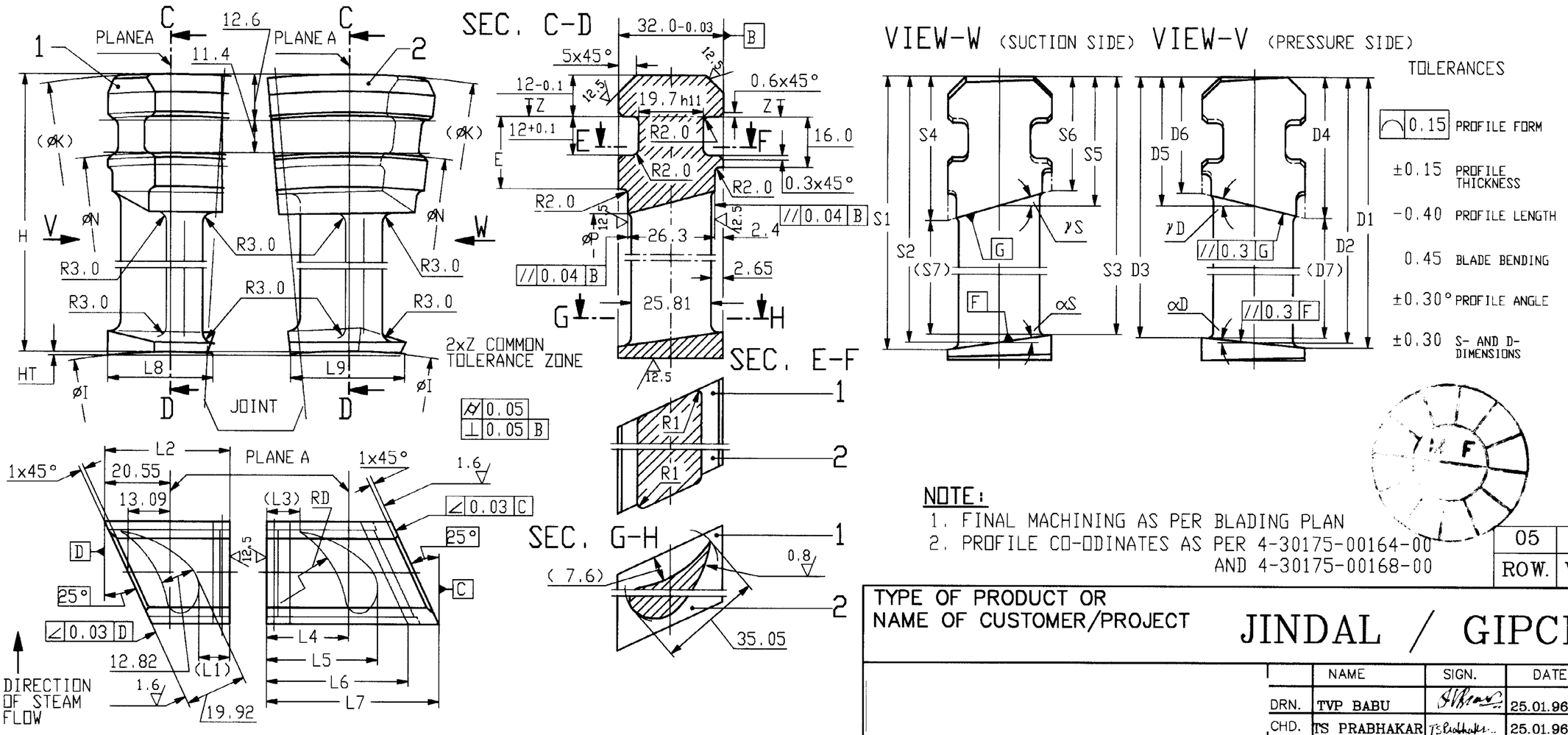

NOTE:
1. FINAL MACHINING AS PER BLADING PLAN
2. PROFILE CO-ODINATES AS PER 4-30175-00164-00 AND 4-30175-00168-00

ROW.	VAR.
05	05

TYPE OF PRODUCT OR NAME OF CUSTOMER/PROJECT: JINDAL / GIPCL

	NAME	SIGN.	DATE	NO.OF VAR.
DRN.	TVP BABU		25.01.96	
CHD.	TS PRABHAKAR		25.01.96	
APPD.	P KODANDARAM		25.01.96	N.A.

DEPT. I.T.D.	UNTOL. DIMS. GR. ~~C/M/F~~		SCALE	WEIGHT (KG)	REF. TO ASSY. DRG.	ITEM NO.	NO.OF ITEMS
CODE 415			N.T.S.	N.A.	-N.A.-	-N.A.-	-N.A.-

TITLE: JOINT BLADE T4-32-53

CARD CODE: N.A.

DRAWING NO. 3-107-47-62024 REV. 00

SHT. No 04 NO. OF SHT. 04

REV	DATE	ALTERED	REV.	DATE	ALTERED	REV.	DATE	ALTERED
		CHD/APPD			CHD/APPD			CHD/APPD
ZONE			ZONE			ZONE		

COMPUTER FILE NAME | REF. DRG. NO. | SIGN. AND DATE | INVENTORY NO

GENERAL DIMENSIONAL LIMITS, FITS & TOLERANCES AS PER HY0230261

FIRST ANGLE PROJECTION

(ALL DIMENSIONS ARE IN mm)

DRG NO. 3-107-47-62025 | SH. 04 OF 04

1) EINSCHLIESSLICH 2 SCHAUFELN AUSFUEHRUNG 01
INCLUDING 2 BLADES TYPE 01

R

STUFE STAGE	ANZ./REIHE QTY/ROW 1)	H	D1	D2	D3	D4	D5	D6	D7	αD GRD.	αD MIN.	γD GRD.	γD MIN.	S1	S2	S3	S4	S5	S6	S7
4	158	240.1	232.5	232.7	232.9	68.7	64.2	59.7	163.8	0	-39	14	30	232.9	232.7	232.5	69.2	64.3	59.4	163.3

KONUSW. F. TEILUNGS-VERGR. UM 0.57 % AUF ØI
TAPER VAL. F. PITCH-INCREASE OF 0.57% RELATED TO ØI

STUFE STAGE	αS GRD.	αS MIN.	γS GRD.	γS MIN.		ØK	ØN	ØP	ØI	TK	TP	TI	L	M	Q	QH	LT	EX 2)	EY 2)	EH 2)
4	0	40	15	44		1970	1918	1833	1489.8	39.33	36.65	29.93	33.71	25.65	11.07	146.0	31.98	10.08	33.54	25.62

2) KONUSW. F. VORR.-LG. 1000
TAPER VAL. F.JIG LG. 1000

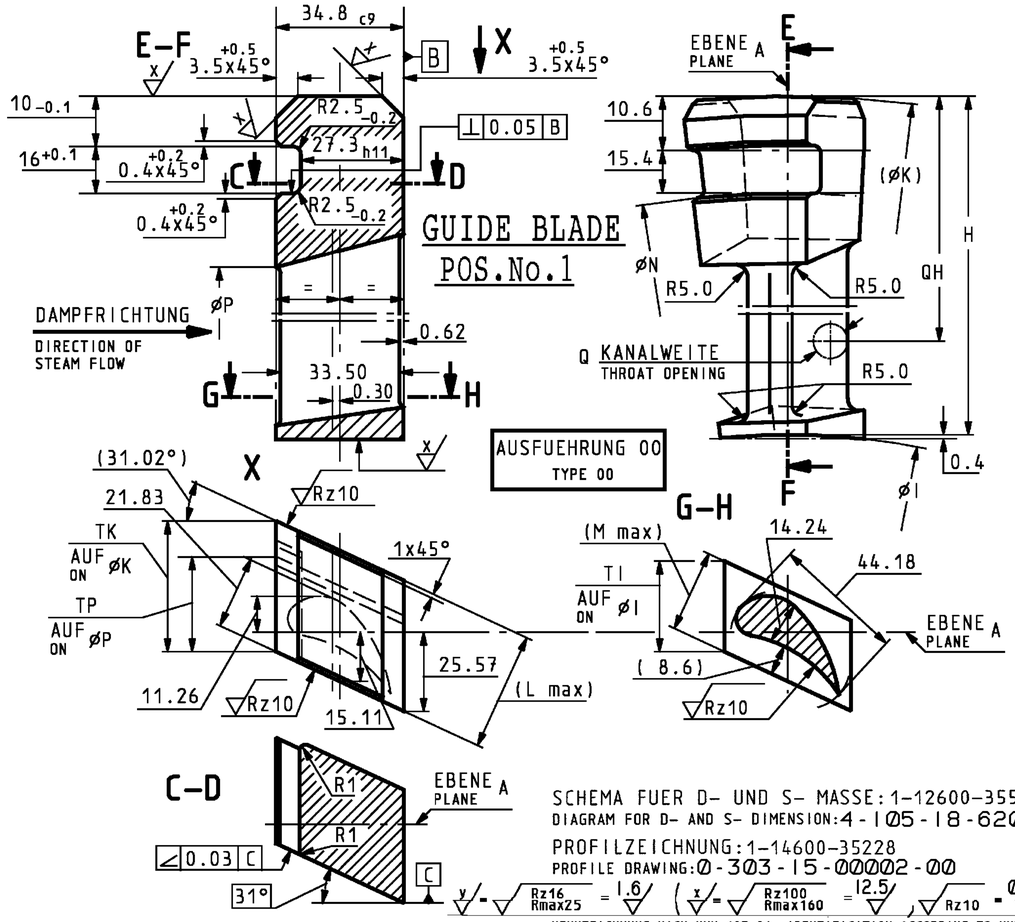

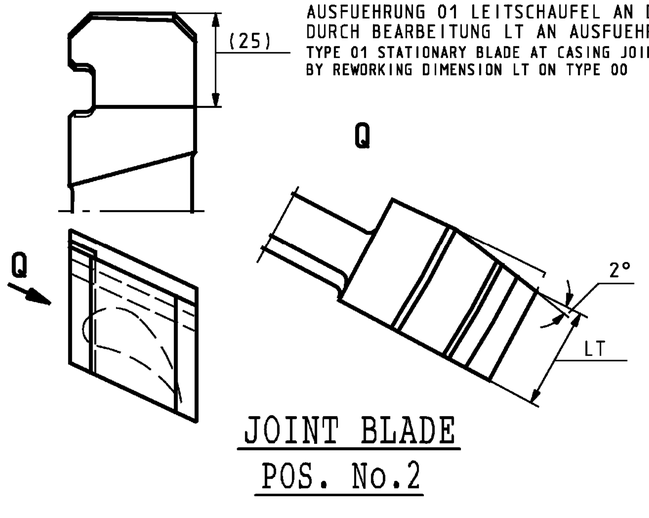

AUSFUEHRUNG 01 LEITSCHAUFEL AN D. TEILFUGE (2 STUECK)
DURCH BEARBEITUNG LT AN AUSFUEHRUNG 00
TYPE 01 STATIONARY BLADE AT CASING JOINT (2 PIECES)
BY REWORKING DIMENSION LT ON TYPE 00

TOLERANZEN
TOLERANCES

0.15	PROFILFORM / PROFILE FORM
±0.15	PROFILDICKE / PROFILE THICKNESS
-0.40	PROFILLAENGE / PROFILE LENGTH
0.35	BLATT-DURCHBIEGUNG / BLADE BENDING
+0.04 -0.02	TEILUNG / PITCH
±0.30	S- UND D-MASSE / S- AND D-DIMENSIONS

SCHEMA FUER D- UND S- MASSE: 1-12600-35593
DIAGRAM FOR D- AND S- DIMENSION: 4-105-18-62002-00
PROFILZEICHNUNG: 1-14600-35228
PROFILE DRAWING: 0-303-15-00002-00

KENNZEICHNUNG NACH KUN 107.01 IDENTIFICATION ACCORDING TO KUN 107.01

X20Cr13/HY10764	FL.75x46	1.210	04	04
MATERIAL/MAT.SPEC.	Flat Size	Wt.(Kg)	VAR	ROW.

TYPE OF PRODUCT OR NAME OF CUSTOMER/PROJECT: KOTHAGUDEM 110MW

	NAME	SIGN	DATE	NO OF VAR
DRN	SCS/TVP		8.3.2000	NA
CHD	T.S.PRABHAKAR		8.3.2000	
APPD	C.N.V.RAMANA		8.3.2000	

DEPT ITD	UNTOL DIMS GR ¢/M/¢		SCALE NTS	WEIGHT (KG) NA	REF TO ASSY DRG NA	ITEM NO NA	NO OF ITEMS NA
CODE 415							

TITLE: GUIDE BLADE TX-40-51.5

CARD CODE: NA

DRAWING NO: 3-107-47-62025 REV 00

SHT No 04 NO OF SHT 04

REV	DATE	ALTERED CHD/APPD	REV	DATE	ALTERED CHD/APPD	REV	DATE	ALTERED CHD/APPD
ZONE			ZONE			ZONE		

GENERAL DIMENSIONAL LIMITS,FITS & TOLERANCES AS PER HY0230261

INVENTORY NO | SIGN AND DATE | REF DRG NO 9528-32610 REV:00 | COMPUTER FILE NAME 3107476025-S04-R00.TIF

FIRST ANGLE PROJECTION

(ALL DIMENSIONS ARE IN mm)

DRG. NO. 3-303-21-00060

SH. 01 OF 01

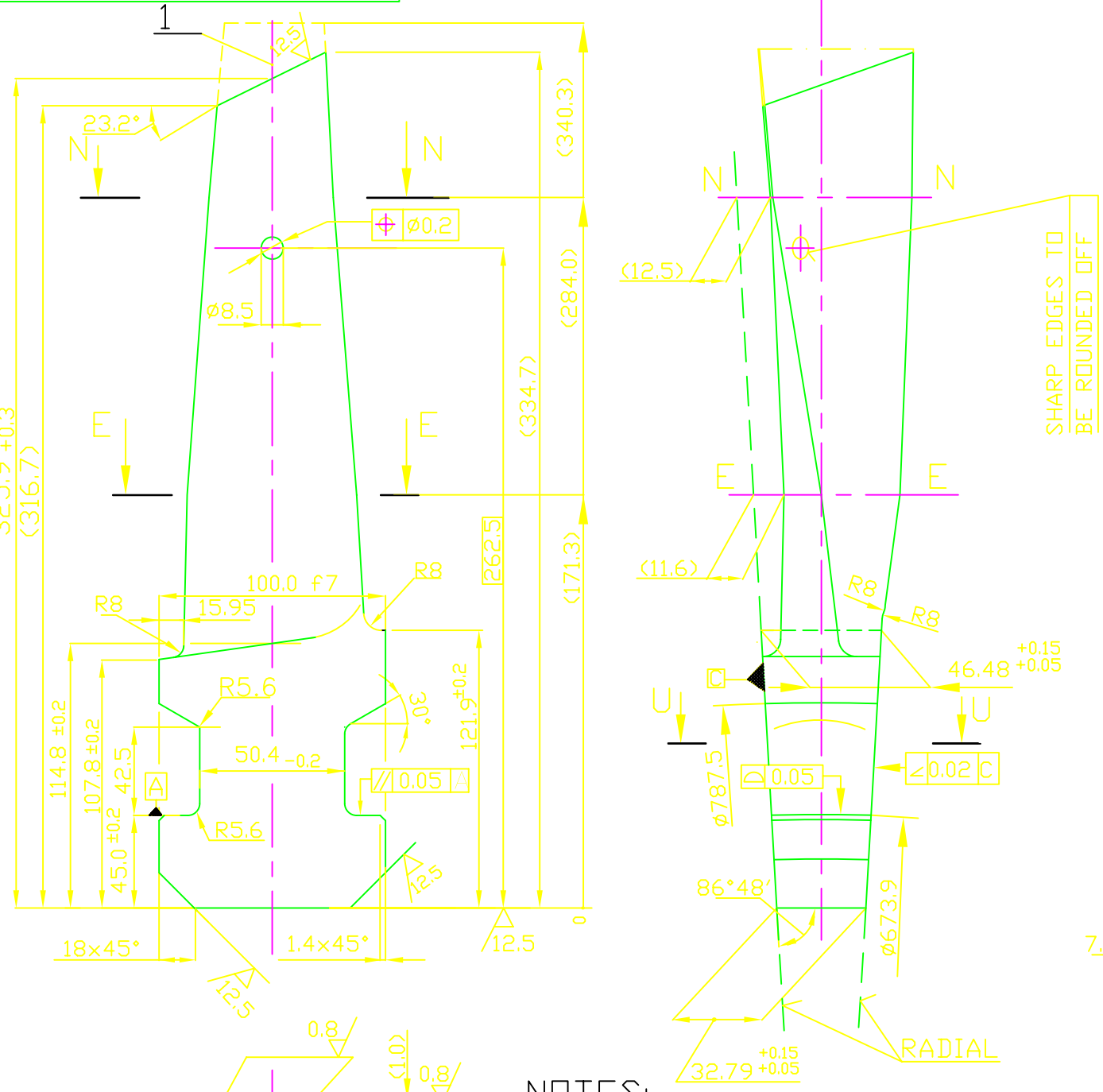

SECTION N-N

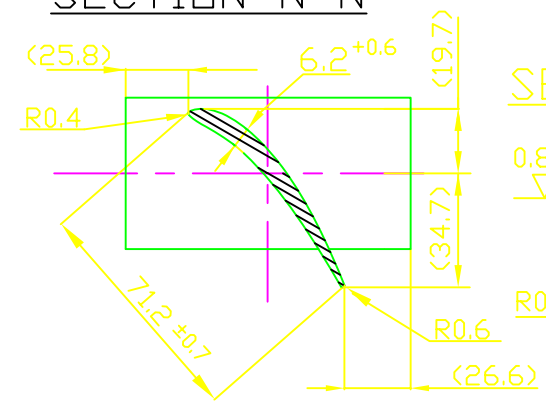

SECTION U-U

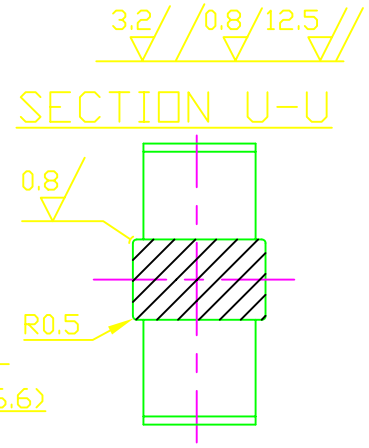

SECTION E-E

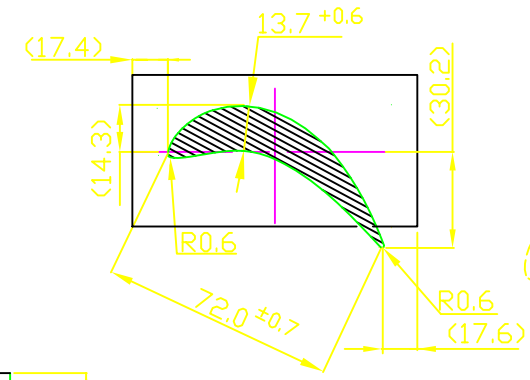

TOLERANCE ON PROFILE

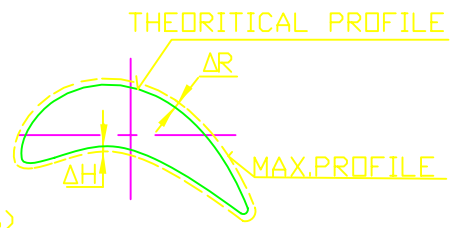

ΔRmax = 0.8 ΔRmin = 0 ΔHmax = 0.2

ΔHmin = 0 max difference ΔR= 0.4

Σ(ΔR + ΔH)max =0.8 Σ(ΔR+ΔH)min= 0.2

DIRECTION ROTATION IS ANTI-CLOCK WISE WHEN SEEN IN THE DIRECTION OF STEAM FLOW.

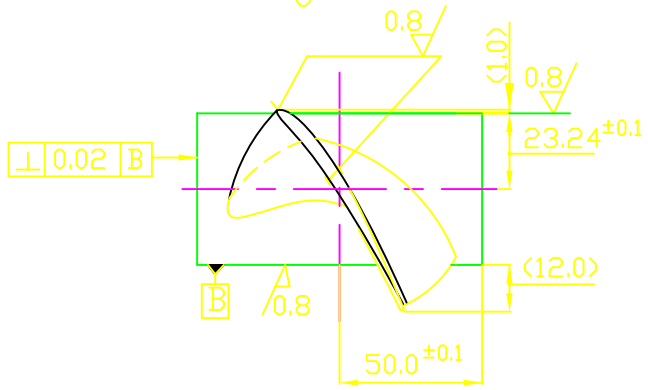

NOTES:

1. PROFILE CO-ORDINATES AS PER DRG.No.1-303-21-00003-00 (2Sh)
2. FINAL MACHINING AS PER BLADING PLAN.
3. MISSING DIMENSIONS OF Pos.No.2. TO BE SEEN IN Pos.No.1.
4. EY FOR FULL ANGLE = 28.02
   EY FOR HLAF ANGLE = 14.03

DESCRIPTION	Mat. Spc.	Wt.	No.Of Pcs.	POS.	VAR.
FL.110 x 75	HY10764	3.35	1	2	-00
FL.110 x 75		3.35	55	1	

TYPE OF PRODUCT OR NAME OF CUSTOMER/PROJECT

	NAME	SIGN.	DATE	NO.OF VAR.
DRN.	T S PRABHAKAR		18.10.2004	-N.A-
CHD.	T S PRABHAKAR		18.10.2004	
APPD.	CNV RAMANA		18.10.2004	

REV.	DATE	ALTERED	REV.	DATE	ALTERED	REV.	DATE	ALTERED
		CHD/APPD			CHD/APPD			CHD/APPD
ZONE			ZONE			ZONE		

DEPT.	UNTOL. DIMS.	SCALE	WEIGHT (KG)	REF. TO ASSY. DRG.	ITEM NO.	NO.OF ITEMS
I.T.D. CODE 415	GR. ~~C/M/F~~	N.T.S	-N.A-	-N.A.-	-N.A.-	-N.A.-

TITLE LP MOVING BLADE SK 80-2 LEFT

CARD CODE N.A.

DRAWING NO. 3-303-21-00060 REV. 00

SHT. No 01 NO. OF SHT. 01

INVENTORY NO | SIGN. AND DATE | REF. DRG. NO. 4-2234-1905-00 | REV: E | COMPUTER FILE NAME

GENERAL DIMENSIONAL LIMITS,FITS & TOLERANCES AS PER HY0230261