FIRST ANGLE PROJECTION

(ALL DIMENSIONS ARE IN mm)

DRG. NO. 0-103-07-62011 SH. 01 OF 01

SECTION B-B

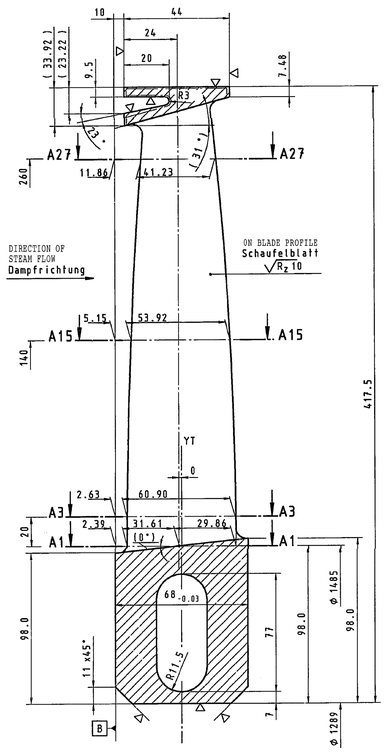

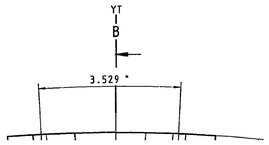

ALLARO
R5 umlauf

PRESSURE SI
Druckse

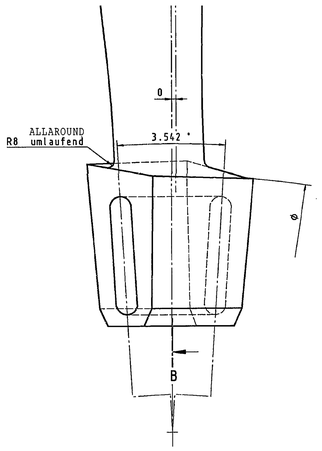

SECTION A27-A27

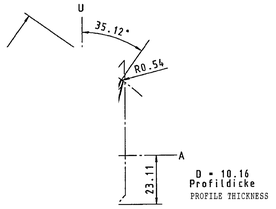

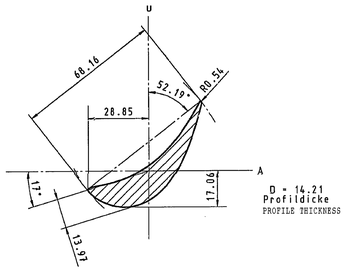

SECTION A3-A3

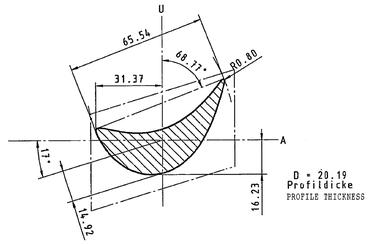

DIMENSIONS FOR DIE
Maßbild für die

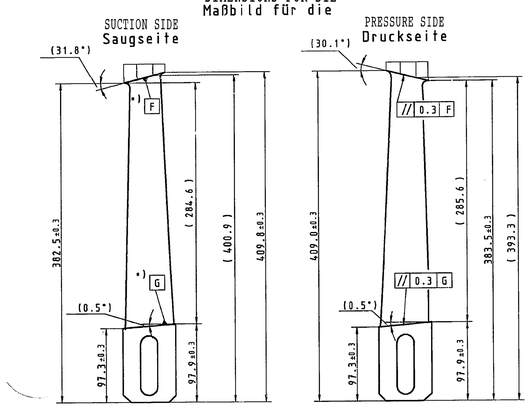

*) bezogen auf Nachbarschaufel
RELATED TO ADJACENT BLADE

Rohteil in Zentrierlage
BLANK IN CENTER POSITION

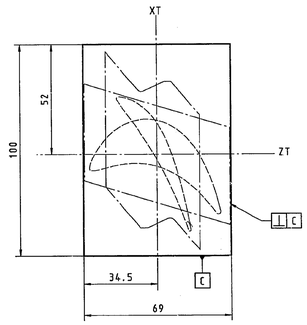

VIEW Z

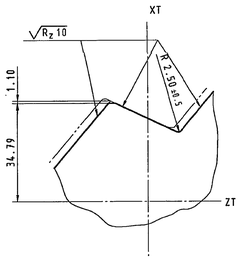

SECTION A1-A1

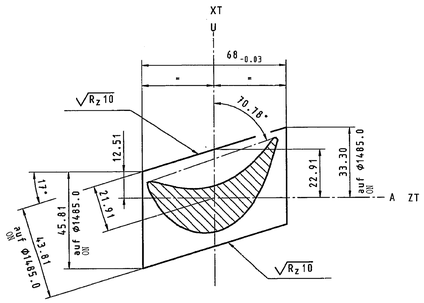

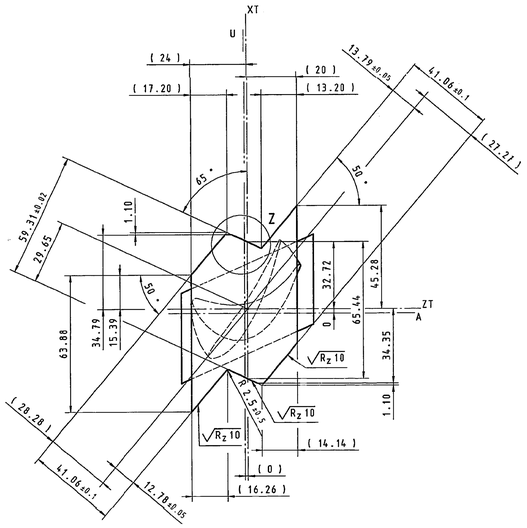

Alle Maße auf Ø2124 bezogen
ALL DIMENSIONS ARE RELATED ON Ø2124

R

Strak-Nr: 19114
Profilzeichnung: 7651-24606/010 bis /011
Nutzeichnung: 6661242

NOTES:

1. PROFILE CO-ORD. AS PER DRG. NO. 0-103-07-62009-00 (2 SH)

TOLERANCES
Toleranzen

⌒ 0.25	Profilform	PROFILE FORM
±0.25	Profildicke	PROFILE THICKNESS
±0.25	Profillänge	PROFILE LENGTH
±0.30	Profilwinkel	PROFILE ANGLE
±0.02	Teilung	PITCH

TAPER VALUES FOR JIG LENGTH = 1000mm
Konuswerte f. Vorrichtungsl. 1000 mm

			ROOT FuB	SHROUD Deckpl.
BLADE POSITION	Schaufellage	Ex	9.031	—
TABLE INCLINATION	Tischneigung	Ey	59.086	—
MEASURED HEIGHT	Meßhöhe	Eh	37.959	—

▽▽ = 3.2/ ▽ = 12.5/ , √Rz10 = 0.4/

-00
VAR

TYPE OF PRODUCT OR
NAME OF CUSTOMER/PROJECT

	NAME	SIGN.	DATE	NO.OF VAR.
DRN.	SCS/TSP		23.5.2000	NA
CHD.	T.S.PRABHAKAR		23.5.2000	
APPD.	C.N.V.RAMANA		23.5.2000	

DEPT. GTD / DEPT CODE 415	UNTOL. DIMS. ±0.1 ±0.1/1°	SCALE NTS	WEIGHT (KG) NA	REF. TO ASSY. DRG. NA	ITEM NO. NA	NO.OF ITEMS NA

TITLE LP LOCK BLADE-1R (F116-64/72-320-70.78°) (NEW 5.0Sqm)

CARD CODE N.A.

DRAWING NO. 0-103-07-62011 REV. 00

SHT. No. 01 NO. OF SHT. 01

SIGN AND DATE | TOP DRG. NO. 7651-24614/001 REV:A | COMP.PRF.FILE NAME 0103070201L1-SCN-30D.TIF

GENERAL DIMENSIONAL LIMITS,FITS & TOLERANCES AS PER HY023026I

INVENTORY NO

THE INFORMATION ON THIS DOCUMENT IS THE PROPERTY OF IT MUST NOT BE USED DIRECTLY OR INDIRECTLY IN ANY WAY DETRIMENTAL TO THE INTEREST OF THE COMPANY

REV.	DATE	ALTERED CHD/APPD	ZONE

THIRD ANGLE PROJECTION

(ALL DIMENSIONS ARE IN mm)

DRG. NO. 0-353-05-61009 SH. 1 OF 1

NOTES:

1. FOR APPLICABLE DRAWING NOTES SEE ITEM 2.

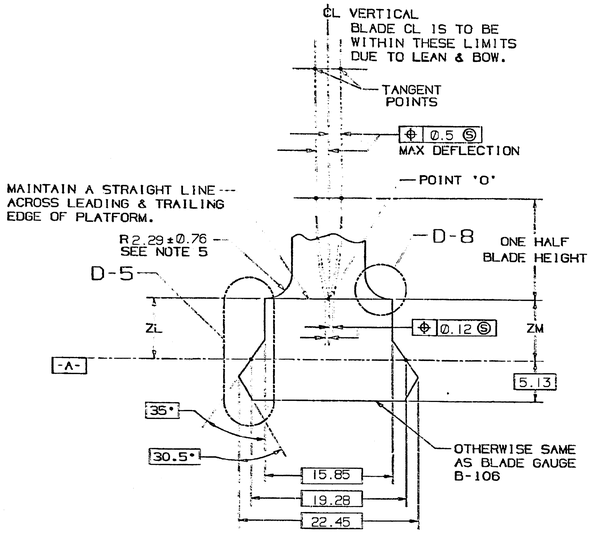

SECTIONS BA-BA, BB-BB & BC-BC (G-3)

SEE NOTE 6

SECTION	ZL +0.00 -0.508	ZM +0.00 -0.508
BA-BA	3.023	5.791
BB-BB	6.985	6.985
BC-BC	6.146	3.708

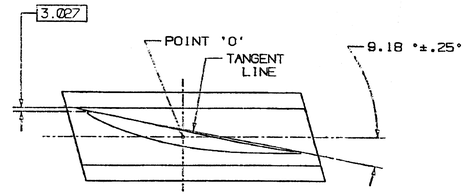

SECTION E-E (E-3)

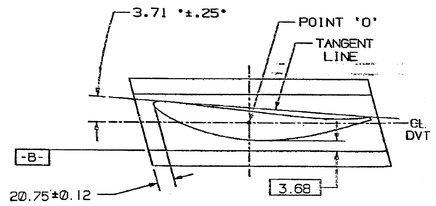

SECTION B-B (D-3)

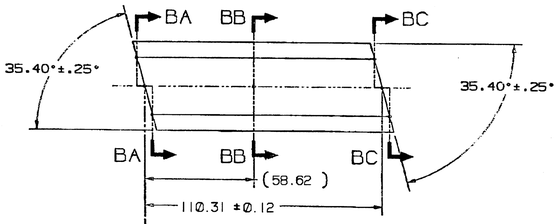

VIEW G-3 (F-3)
(AIRFOIL DELETED FOR CLARITY)

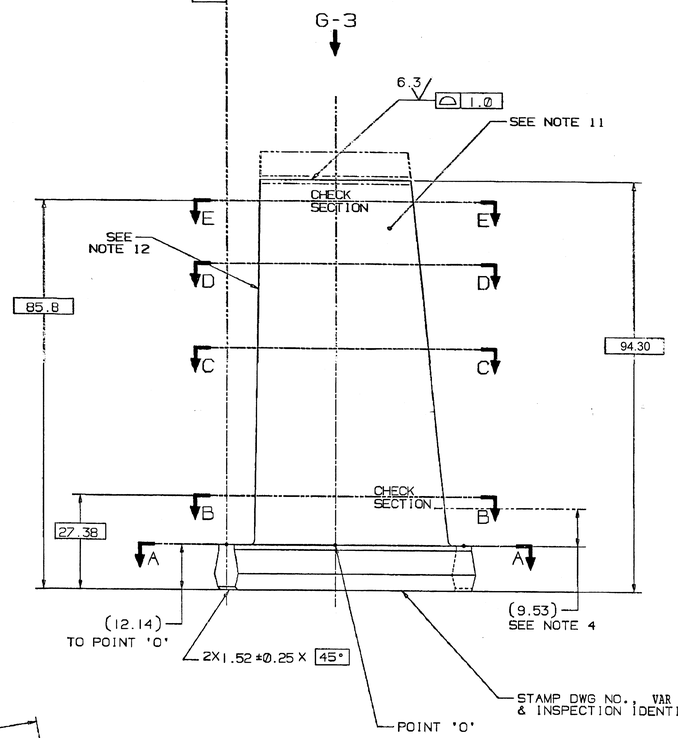

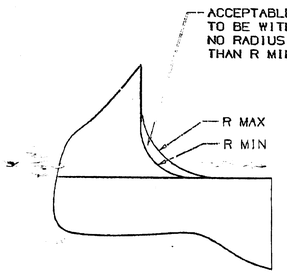

DETAIL D-8 (G-7)

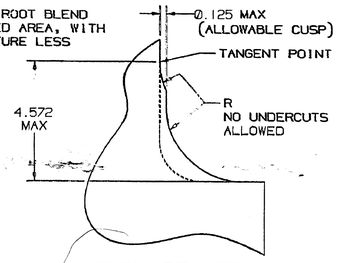

ALTERNATE METHOD OF MANUFACTURE
(REFER TO DETAIL D-8)

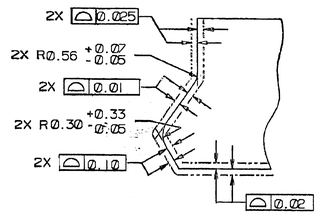

DETAIL D-5 (G-7)

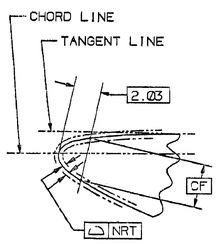

DETAIL B-8 (C-6)
(LEADING EDGE)

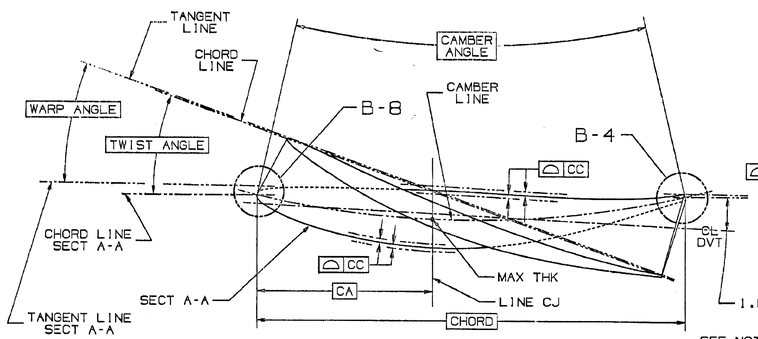

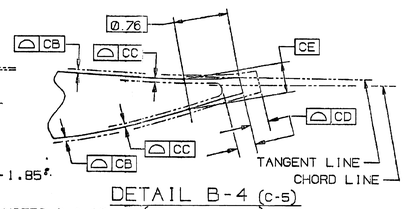

DETAIL B-4 (C-5)
(TRAILING EDGE)

SEE NOTES 9 & 10

SECTION	SECTION HEIGHT	CHORD	PERCENT THICKNESS	CAMBER ANGLE	TWIST ANGLE	WARP ANGLE	THICKNESS AT 'CA'	CA	CB	CC	CD	CE	CF	NRT
A-A	0.00	54.43	17.500	19.000	.000	.000	9.517	21.772	0.079	0.160	0.544	1.176	3.462	0.114
B-B	15.24	54.43	14.000	16.700	2.800	1.637	7.615	21.772	0.064	0.127	0.544	0.939	2.774	0.076
C-C	30.48	54.43	11.400	15.000	5.200	3.174	6.200	21.772	0.051	0.104	0.544	0.767	2.261	0.076
D-D	45.72	54.43	9.800	13.500	7.400	4.970	5.330	21.772	0.046	0.089	0.544	0.658	1.946	0.076
E-E	73.66	54.43	7.400	11.400	10.200	7.102	4.049	21.772	0.038	0.076	0.544	0.556	1.471	0.076

-C-	F-4	1
-B-	F-6	1
-A-	F-8	1
DATUM	ZONE	SHEET

MATL HY10996 (C450)OWSA VAR 01	-	10
COAT PER ITEM 7 OWSA VAR 01	P3	03
COAT PER ITEM 6 OWSA VAR 01	P2	02
MATL HY10988 (AISI 403 Cb)	P1	0
DESCRIPTION	REF	VAR

MATING PART REFERENCE DATA	
POINT 'O' Ø	948.44
RIM ANGLE	.000
DOVETAIL ANGLE	35.400

7	COATING, ALUMINUM-INORGANIC	P16A-A03	GT10125
6	COATING, ALUMINUM-INORGANIC	P16A-A05	GT10606
5	ACPT REOT-BLADES & VANES	P29A-A3900	GT10123
4	COMPR VANES-PROCESSING	P3C-A660	GT10033
3	X-Y COORDS (FOR 217X412)	342A1100	GT10357
2	APPLICABLE DWG NOTES	314A5112	GT10607
1	APPLIED PRACTICES	348A9200	HY0230261
IT.	NOMENCLATURE	IDENT	SPECN
LIST OF COMPLEMENTARY DOCUMENTS			

TYPE OF PRODUCT OR NAME OF CUSTOMER/PROJECT: GAS TURBINE FR-6

	NAME	SIGN.	DATE	NO. OF VAR.
DRN.	SCS	R.Cassidy	24-3-99	NA
CHD.	RS	R.Cassidy	24-3-99	NA
APPD.	KWH	K.Hewitt	24-3-99	

DEPT. GTD CODE 423 | UNTOL. DIMS. GR. C/M/F | SCALE NTS | WEIGHT (KG) 0.32 | REF. TO ASSY. DRG. NA | ITEM NO. NA | NO. OF ITEMS NA

TITLE: BLADE, ROTOR-STG 17

CARD CODE NA | DRAWING NO. 0-353-05-61009 | REV. 01 | SHT. No 1 | NO OF SHT. 1

REV.	DATE	ALTERED	CHD/APPD
01	12.05	DIM 94.30 WAS 96.27 DCA:GT1665	NVS SSR

ZONE E-2

GENERAL DIMENSIONAL LIMITS,FITS & TOLERANCES AS PER HY0230261

THE INFORMATION ON THIS DOCUMENT IS THE PROPERTY OF MUST NOT BE USED DIRECTLY OR INDIRECTLY IN ANY WAY DETRIMENTAL TO THE INTEREST OF THE COMPANY

INVENTORY NO

SIGN AND DATE | REF. DWG. NO. 0-353-81 REV.-- | COMPUTER FILE NAME 0-353-61.INT

THIRD ANGLE PROJECTION

(ALL DIMENSIONS ARE IN mm)

DRG. NO. 0-353-05-91002 SH. 1 OF 1

DRAWING		PRECISION MASTER	
PT NO	REV	DWG NO	REV
1	—	217X240	—

NOTES:

1. FOR APPLICABLE DRAWING NOTES SEE ITEM 2.

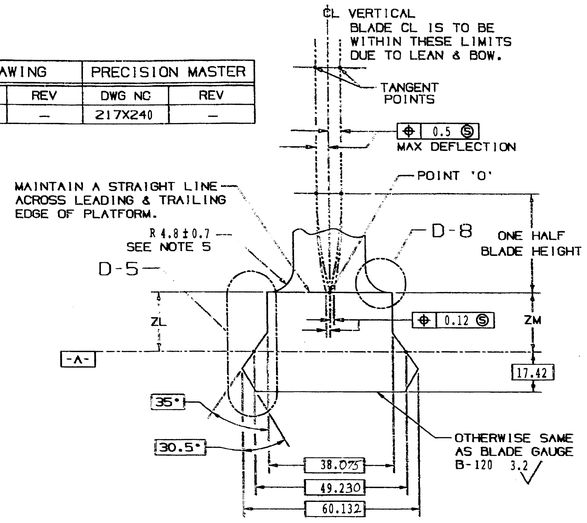

SECTIONS BA-BA, BB-BB & BC-BC (G-3)

SEE NOTE 6

SECTION	ZL ± 0.2	ZM ± 0.2
BA-BA	15.8	16.8
BB-BB	16.6	16.6
BC-BC	16.8	15.5

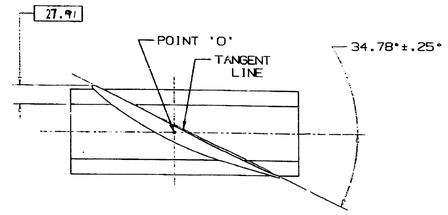

SECTION G-G (E-3)

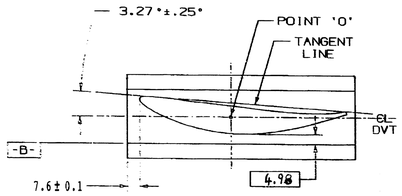

SECTION B-B (D-3)

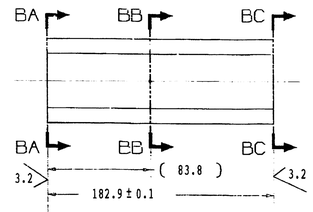

VIEW G-3 (F-3)
(AIRFOIL DELETED FOR CLARITY)

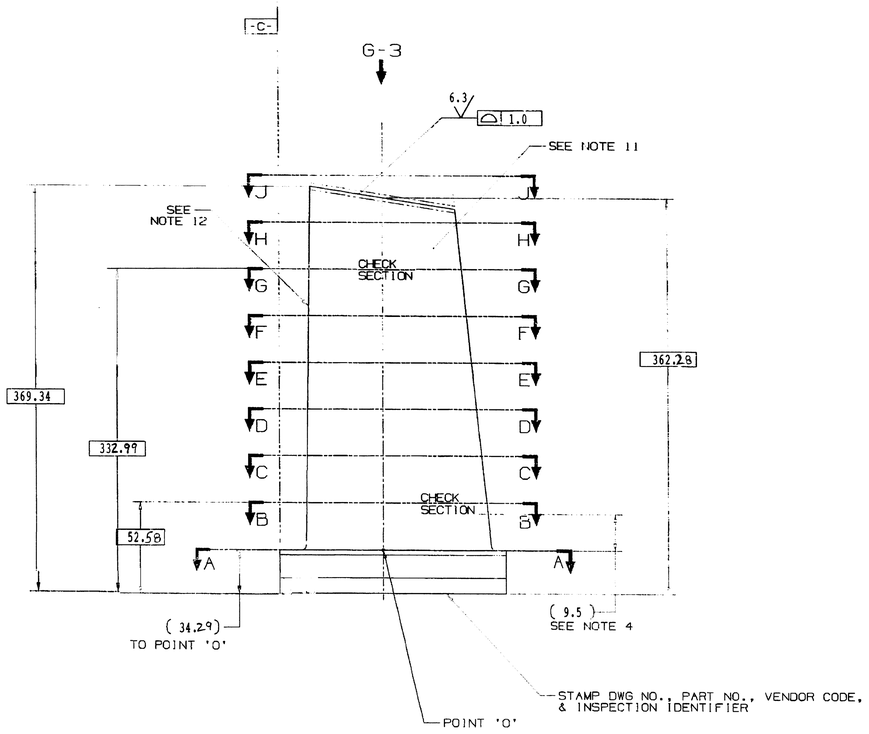

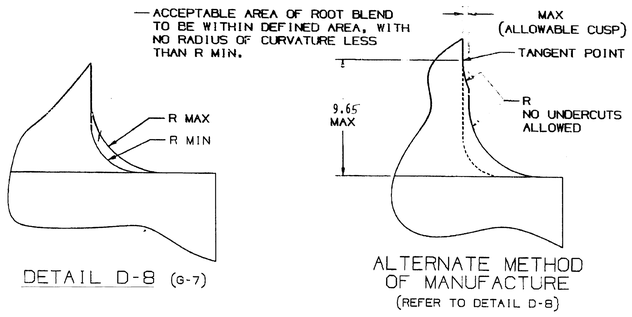

DETAIL D-8 (G-7)

ALTERNATE METHOD OF MANUFACTURE
(REFER TO DETAIL D-8)

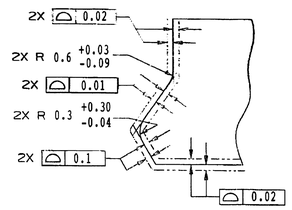

DETAIL D-5 (G-7)

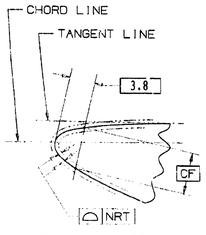

DETAIL B-8 (C-6)
(LEADING EDGE)

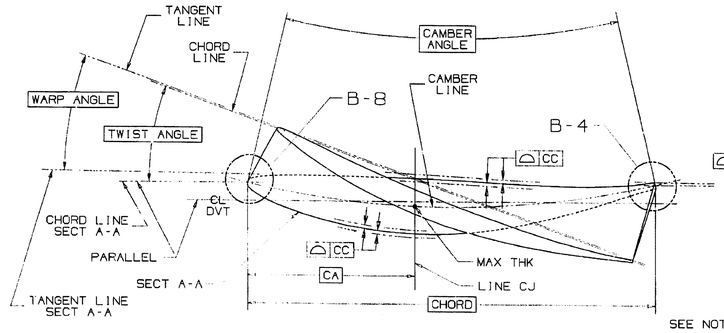

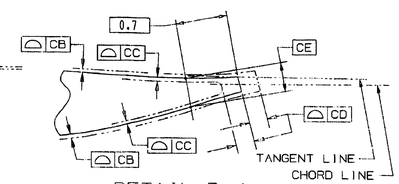

DETAIL B-4 (C-5)
(TRAILING EDGE)

SEE NOTES 9 & 10

SECTION	SECTION HEIGHT	CHORD	PERCENT THICKNESS	CAMBER ANGLE	TWIST ANGLE	WARP ANGLE	THICKNESS AT 'CA'	CA	CB	CC	CD	CE	CF	NRT
A-A	00.00	168.63	13.500	37.000	.000	.000	22.75	67.452	0.19	0.38	1.69	2.61	6.469	0.21
B-B	18.29	168.63	12.945	35.000	3.000	3.009	21.81	67.452	0.18	0.36	1.69	2.51	6.218	0.19
C-C	073.15	168.63	11.279	28.500	11.800	11.815	19.00	67.452	0.16	0.32	1.69	2.19	5.48	0.13
D-D	128.02	168.63	9.613	24.500	19.100	19.100	16.20	67.452	0.13	0.27	1.69	1.86	4.663	0.1
E-E	182.96	168.63	7.947	20.300	25.000	24.959	13.39	67.452	0.11	0.22	1.69	1.54	3.866	0.07
F-F	262.13	168.63	5.541	15.600	32.100	31.958	09.34	67.452	0.08	0.15	1.69	1.07	2.703	0.07
G-G	298.70	168.63	4.430	13.800	34.700	34.510	7.47	67.452	0.06	0.12	1.69	0.86	2.164	0.07
H-H	323.09	168.63	3.690	12.700	36.300	36.083	6.22	67.452	0.05	0.10	1.69	0.72	1.803	0.07
J-J	338.33	168.63	3.250	12.000	37.283	37.050	5.48	67.452	0.046	0.09	1.69	0.63	1.588	0.07

MATING PART REFERENCE DATA	
POINT 'O' Ø	1417.68
RIM ANGLE	.000
DOVETAIL ANGLE	75.433

5	ACPT REOT-BLADES & VANES	P29A-AG900	GT10128
4	COMPR VANES-PROCESSING	P3C-AG80	GT10083
3	X-Y COORDS	287A7860	GT10656
2	APPLICABLE DWG NOTES	314A5112	GT10459
1	APPLIED PRACTICES	348A9200	HY230261
IT.	NOMENCLATURE	IDENT	BREL SPEC
LIST OF COMPLEMENTARY DOCUMENTS			

TYPE OF PRODUCT OR NAME OF CUSTOMER/PROJECT: FRAME - 9

	NAME	SIGN.	DATE	NO. OF VAR.
DRN.	SCS		4.1.2000	NA
CHD.	SKR		4.1.2000	
APPD.	SSR		4.1.2000	

DEPT. CODE	UNTOL. DIMS.	SCALE	WEIGHT (KG)	REF. TO ASSY. DRG.	ITEM NO.	NO. OF ITEMS
423	±1/4	NA	6.6	NA	NA	NA

TITLE: BLADE ROTOR STG 2

DRAWING NO. 0-353-05-91002 REV. 00 SHT. No 1 OF 1

CARD CODE

REV.	DATE	ALTERED	CHD/APPD	ZONE

THE INFORMATION ON THIS DOCUMEN NOT BE USED DIRECTLY OR INDIRECT

GENERAL DIMENSIONAL LIMITS,FITS & TOLERANCES AS PER HY023O261

COMPUTER FILE NAME 0353091002-SH01.DWG

REF. DRG. NO. 1195E124 REV'A'

SIGN. AND DATE

INVENTORY NO

MUST

THIRD ANGLE PROJECTION

(ALL DIMENSIONS ARE IN mm)

DRG. NO. 0-353-05-91003 SH. 1 OF 1

DRAWING		PRECISION MASTER	
PT NO	REV	DWG NO	REV
1	—	217X240	—

NOTES:

1. FOR APPLICABLE DRAWING NOTES SEE ITEM 2.

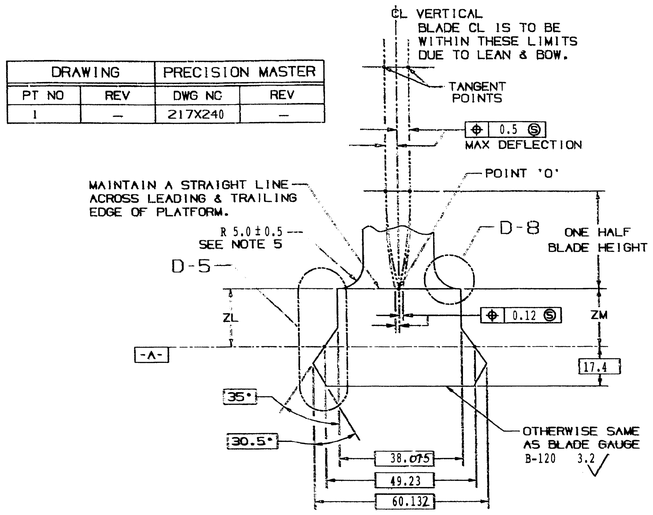

SECTIONS BA-BA, BB-BB & BC-BC (G-3)

SEE NOTE 6

SECTION	ZL ± 0.2	ZM ± 0.2
BA-BA	15.8	16.9
BB-BB	16.6	16.6
BC-BC	16.8	15.5

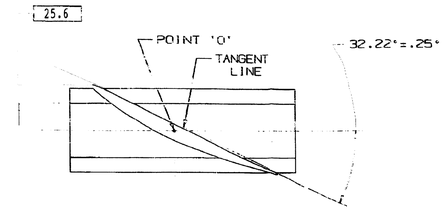

SECTION F-F (E-3)

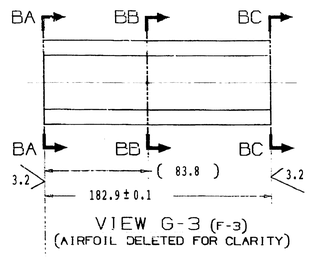

VIEW G-3 (F-3)
(AIRFOIL DELETED FOR CLARITY)

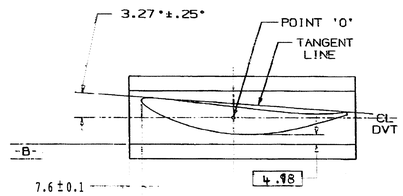

SECTION B-B (D-3)

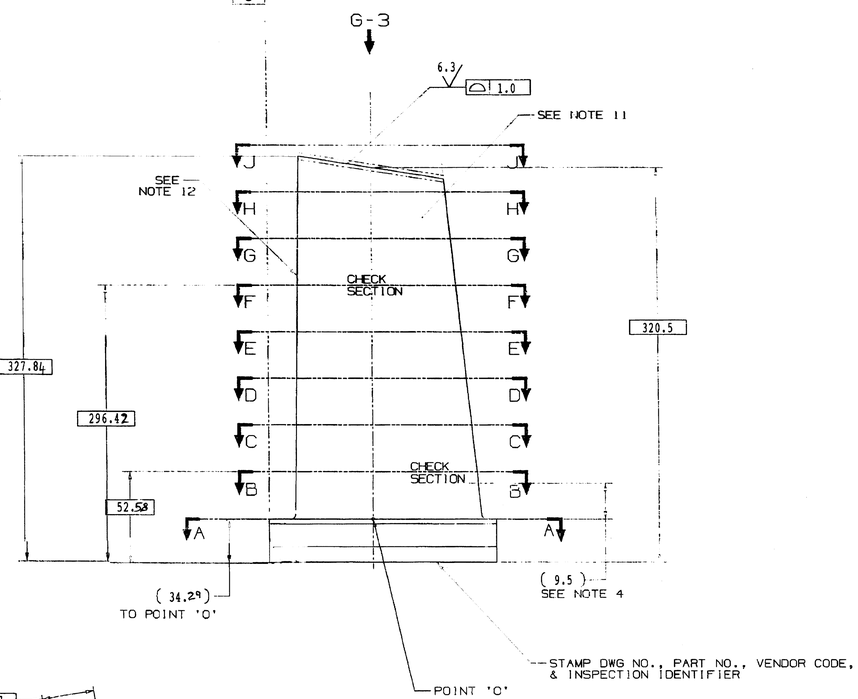

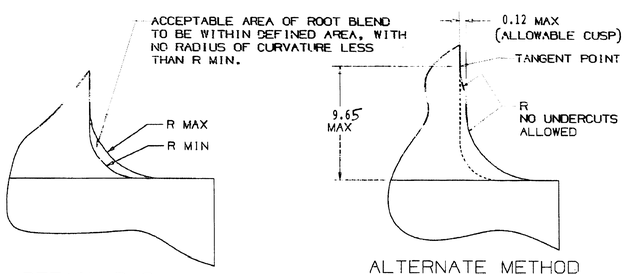

DETAIL D-8 (G-7)

ALTERNATE METHOD OF MANUFACTURE
(REFER TO DETAIL D-8)

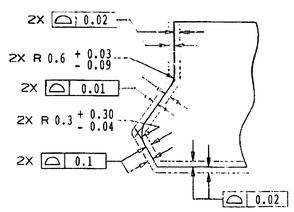

DETAIL D-5 (G-7)

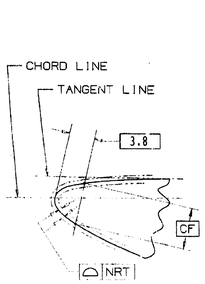

DETAIL B-8 (C-6)
(LEADING EDGE)

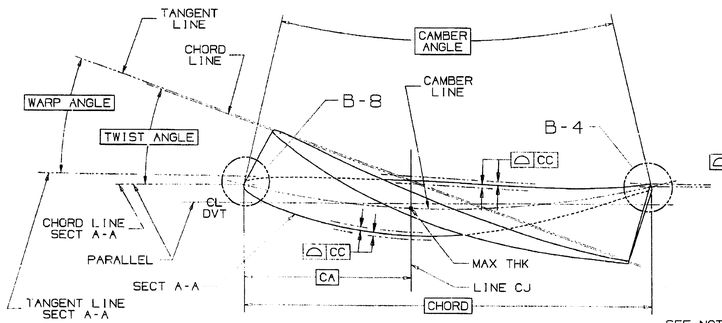

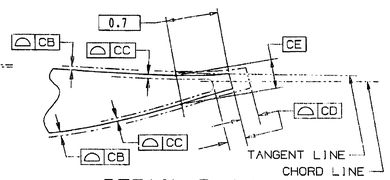

DETAIL B-4 (C-5)
(TRAILING EDGE)

SEE NOTES 9 & 10

SECTION	SECTION HEIGHT	CHORD	PERCENT THICKNESS	CAMBER ANGLE	TWIST ANGLE	WARP ANGLE	THICKNESS AT 'CA'	CA	CB	CC	CD	CE	CF	NRT
A-A	00.00	168.63	13.500	37.000	.000	.000	22.75	67.452	0.19	0.38	1.69	2.61	6.469	0.21
B-B	18.29	168.63	12.945	35.000	3.000	3.009	21.81	67.452	0.18	0.36	1.69	2.51	6.218	0.19
C-C	073.15	168.63	11.279	29.500	11.800	11.815	19.001	67.452	0.16	0.32	1.69	2.19	5.468	0.13
D-D	128.02	168.63	9.613	24.500	19.100	19.100	16.20	67.452	0.13	0.27	1.69	1.86	4.663	0.1
E-E	182.88	168.63	7.947	20.300	25.000	24.959	13.39	67.452	0.11	0.22	1.69	1.54	3.866	0.07
F-F	262.13	168.63	5.541	15.600	32.100	31.958	09.34	67.452	0.08	0.15	1.69	1.07	2.703	0.07
G-G	298.70	168.63	4.430	13.800	34.700	34.510	7.47	67.452	0.06	0.12	1.69	0.86	2.164	0.07
H-H	323.09	168.63	3.690	12.700	36.300	36.083	6.22	67.452	0.05	0.10	1.69	0.72	1.803	0.07
J-J	338.33	168.63	3.250	12.000	37.283	37.050	5.48	67.452	0.046	0.09	1.69	0.63	1.588	0.07

MATING PART REFERENCE DATA	
POINT 'O' Ø	1417.68
RIM ANGLE	.000
DOVETAIL ANGLE	75.433

5	ACPT REOT-BLADES & VANES	P29A-AG900	GT10128
4	COMPR VANES-PROCESSING	P3C-AG60	GT10083
3	X-Y COORDS	287A7860	GT10656
2	APPLICABLE DWG NOTES	314A5112	GT10459
1	APPLIED PRACTICES	348A9200	HY230261
IT.	NOMENCLATURE	IDENT	BREL SPEC

LIST OF COMPLEMENTARY DOCUMENTS

THE INFORMATION ON THIS DOCUMENT IS THE PROPERTY OF THE COMPANY. IT MUST NOT BE USED DIRECTLY OR INDIRECTLY IN ANY WAY DETRIMENTAL TO THE INTEREST OF THE COMPANY

GENERAL DIMENSIONAL LIMITS, FITS & TOLERANCES AS PER HY0230261

SIGN. AND DATE | REF. DRG. NO. 109E5125 REV A' | COMPUTER FILE NAME 235395103-E90-281.FTF | INVENTORY NO

TYPE OF PRODUCT OR

NAME OF CUSTOMER/PROJECT

	NAME	SIGN.	DATE	NO. OF VAR.
DRN.	SCS		4.1.2000	
CHK.	SKR		4.1.2000	NA
APPD.	SSR		4.1.2000	

DEPT. GTD CODE	UNTOL. DIMS. GR.	SCALE	WEIGHT (KG)	REF. TO ASSY. DRG.	ITEM NO.	NO. OF ITEMS
423		NA	6.4	NA	NA	NA

TITLE: BLADE ROTOR STG 3

CARD CODE | DRAWING NO. 0-353-05-91003 | REV. 00 | SHT. No. 1 | NO OF SHT. 1

REV.	DATE	ALTERED	CHD/APPD

FIRST ANGLE PROJECTION

(ALL DIMENSIONS ARE IN mm)

DRG. NO. 1-10102-41001

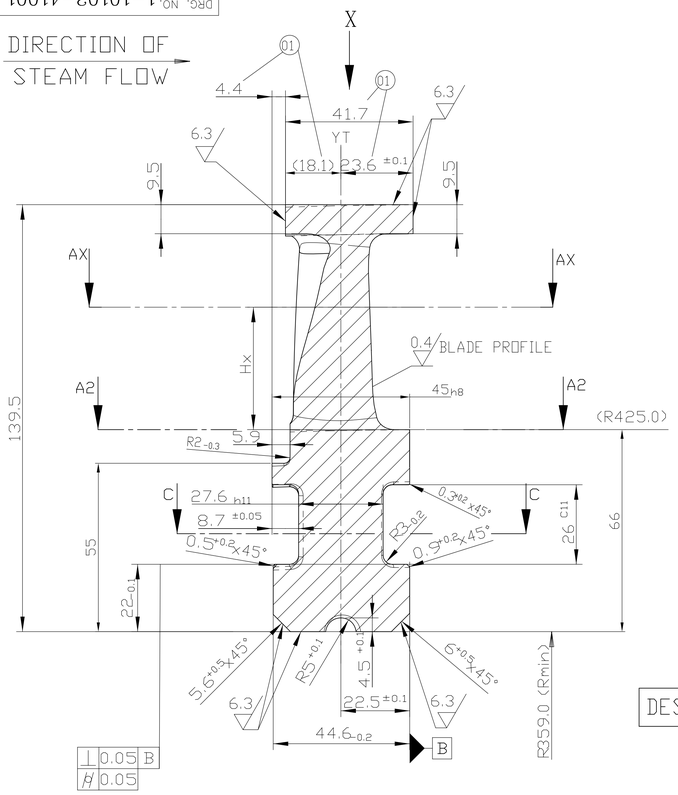

SECTION BB

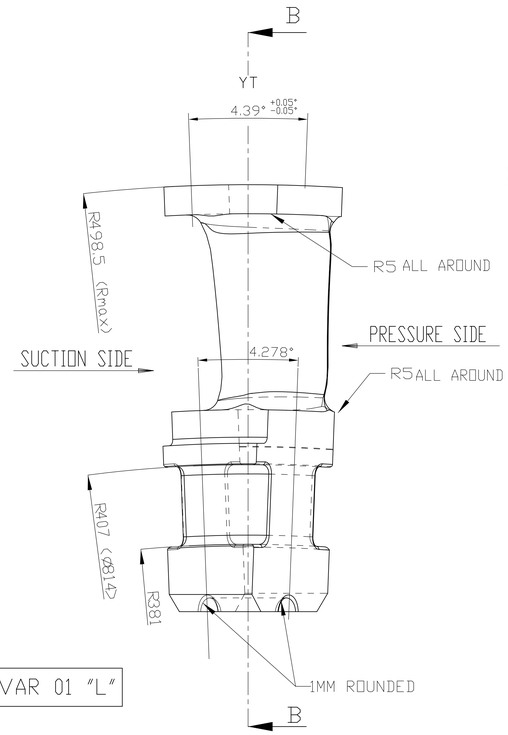

DESIGN: VAR 01 "L"

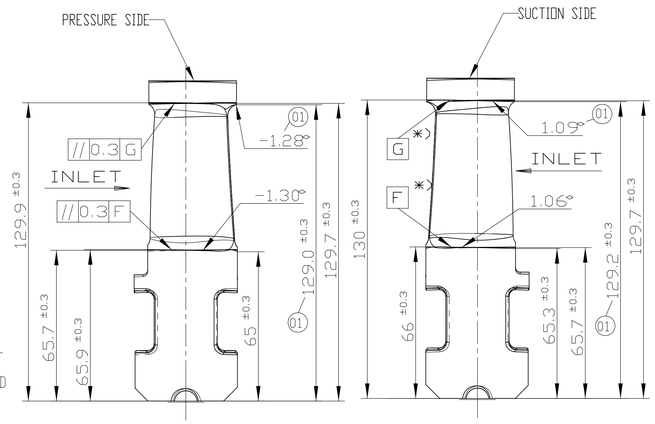

SCHEME FOR D & S DIMENSIONS

*) REFERRED TO ADJECENT BLADES

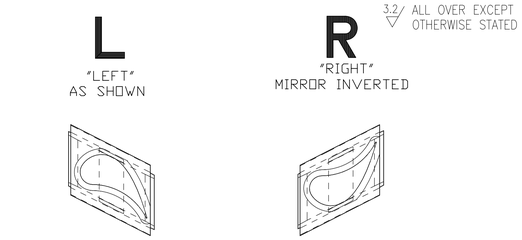

DESIGN: VAR 01 "L"

DESIGN: VAR 02 "R"

BLADE SEEN IN THE DIRECTION OF STEAM FLOW

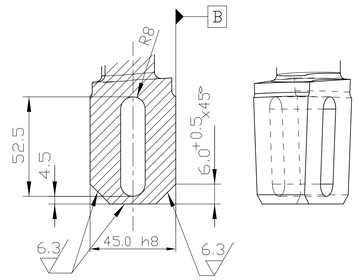

LOCKING BLADE

DESIGN: VAR 03 "L"

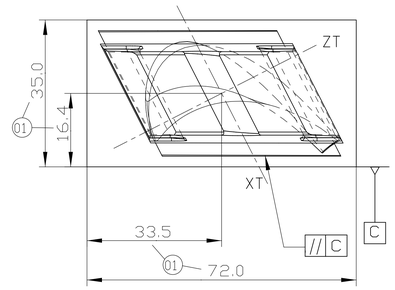

CENTRE DISTANCES IN SEMI FINISHED CONDITION

DESIGN: VAR 02 "R"

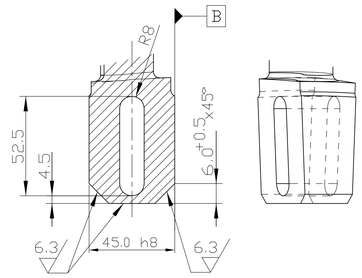

LOCKING BLADE

DESIGN: VAR 04 "R"

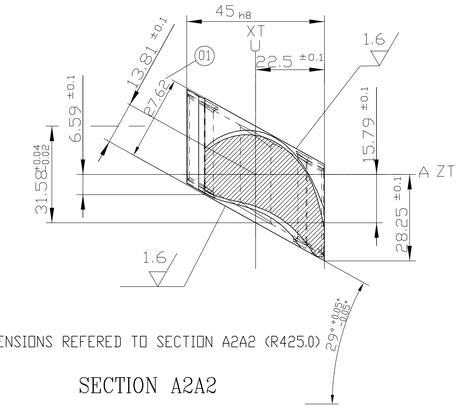

ALL DIMENSIONS REFERED TO SECTION A2A2 (R425.0)

SECTION A2A2

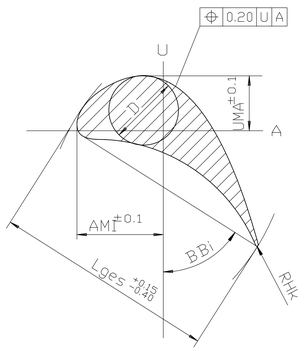

SECTION Ax	Hx	Lges	AMI	UMA	RHk	BBi	D
A1 - A1	-10.0	45.58	15.67	16.78	0.23	57.25	15.81
A2 - A2	0.0	45.51	15.56	11.31	0.24	56.90	15.11
A5 - A5	9.0	45.62	15.51	8.61	0.24	55.44	14.55
A13-A13	33.0	46.99	14.92	10.17	0.26	48.50	13.02
A20-A20	54.0	49.49	13.83	12.65	0.27	42.09	11.41

LOCAL SMALLEST RADIUS OF CURVATURE ON PRESSURE SIDE: 26.6 MM

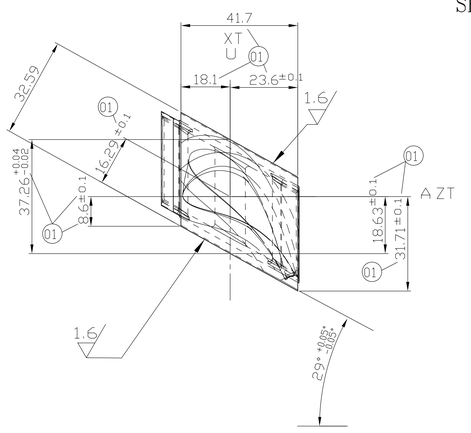

ALL DIMENSIONS REFERED TO "Rmax"

VIEW X

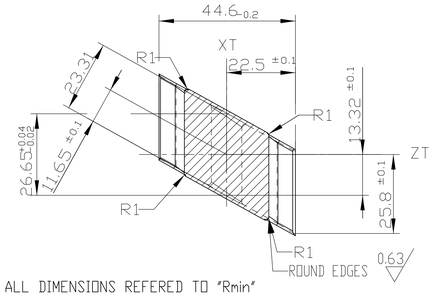

ALL DIMENSIONS REFERED TO "Rmin"

SECTION CC

TOLERANCE TABLE

NOMINAL SIZE mm		TOLERANCE RANGE		
		h11	C11	h8
ABOVE	UP TO	UPPER / LOWER	UPPER / LOWER	UPPER / LOWER
18	30	0 / -0. 130	+0. 240 / +0. 110	0 / -0. 033
30	40	0 / -0. 160	+0. 280 / +0. 120	0 / -0. 039
40	50	0 / -0. 160	+0. 290 / +0. 130	0 / -0. 039

TECNICAL REQUIREMENTS:

1. TOLERANCES:
   - 0.20 PROFILE FORM
   - ±0.20 PROFILE THICKNESS
   - ±0.30 PROFILE ANGLE
2. STRAK NUMBER: 25101
3. NUMBER OF BLADES/ ROWS: 85 (INCLUDING LOCKIING BLADE)

GRADE OF UNTOL.DIM
M/CG.-¢/M/# AA0230208
WELDING-#/B/¢/D AA0621104
GAS CUTTING-'T3'AA0621101

~~GMS No.~~ / C.B.O.M.- NO. 01010241000			STATUS OF DRG
AGREED DEPT	NAME	SIGN	DATE
TBM	A. M.	Sd/-	28.07.03

REV	DATE	ALTERED / CHECKED	REV	DATE	ALTERED / CHECKED

REV	DATE	ALTERED / CHECKED
01	09.09.2005	ALTERED SK GARG sd/- / CHECKED PK BANSAL sd/-

DIMENSIONS IN SECTION BB, S&D VIEW, SEMIFINISHED CONDITION, SECTION A2A2 AND VIEW X ARE REVISED AS PER CHANGE ADVICE

(STE-05-F0192)

TYPE OF PRODUCT OR NAME OF CUSTOMER/PROJECT: STEAM TURBINE

BHARAT HEAVY ELECTRICALS LTD. RANIPUR, HARDWAR

	NAME	SIGN	DATE
DRN	SKGARG	Sd/-	18.05.02
CHD	SKGARG	Sd/-	18.03.03
APPD	TKGHOSH	Sd/-	18.11.03

NO. OF VAR

DEPT	SCALE	WEIGHT (KG)	REF. TO ASSY. DRG.	ITEM No.	NO. OF ITEMS
STE	NTS	0.85	01010241000	—	—
CODE 4011					

TITLE : MOVING BLADE ST 1 S501-R45-TR139.5/064A2S

CARD CODE

DRAWING NO. 1-10102-41001

SHEET No. 01 No. OF SHEETS 01

A1 SIZE

THE INFORMATION ON THIS DOCUMENT IS THE PROPERTY OF BHARAT HEAVY ELECTRICALS LIMITED. IT MUST NOT BE USED DIRECTLY OR INDIRECTLY IN ANY WAY DETRIMENTAL TO THE INTREST OF THE COMPAY

INVENTORY NO | SIGN. AND DATE | REF. DRG. NO.

FIRST ANGLE PROJECTION

(ALL DIMENSIONS ARE IN mm)

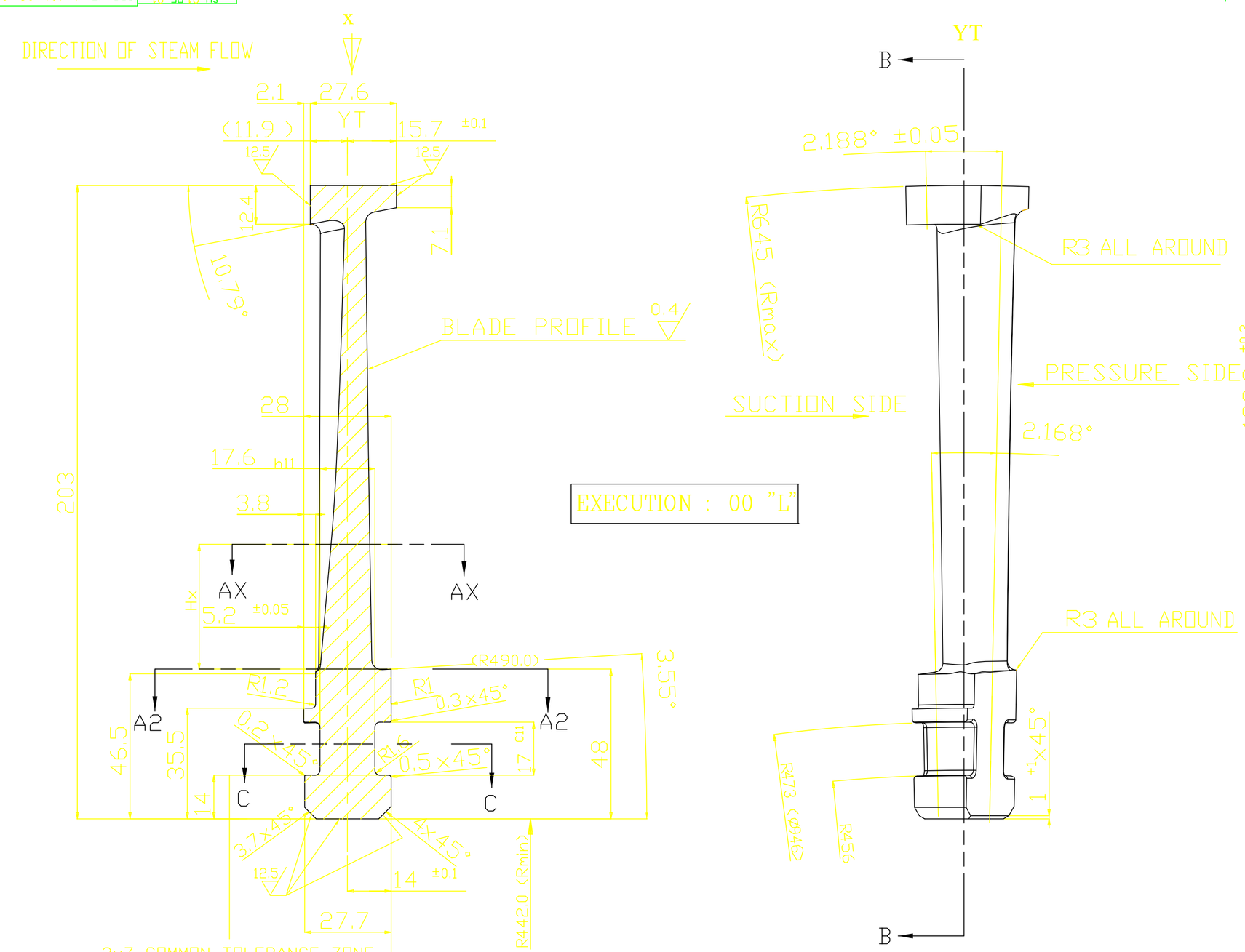

SECTION B-B

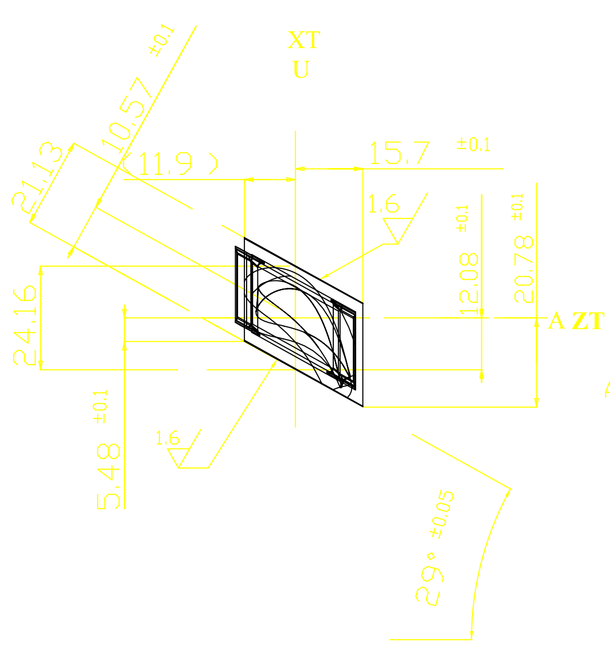

ALL DIMENSIONS REFERRED TO "Rmax"

VIEW X

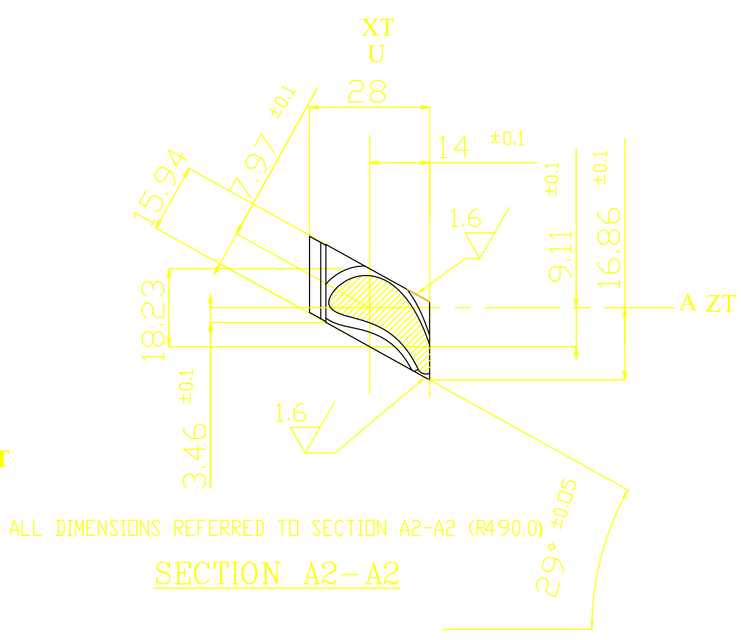

ALL DIMENSIONS REFERRED TO SECTION A2-A2 (R490.0)

SECTION A2-A2

SCHEME FOR S & D DIMENSIONS

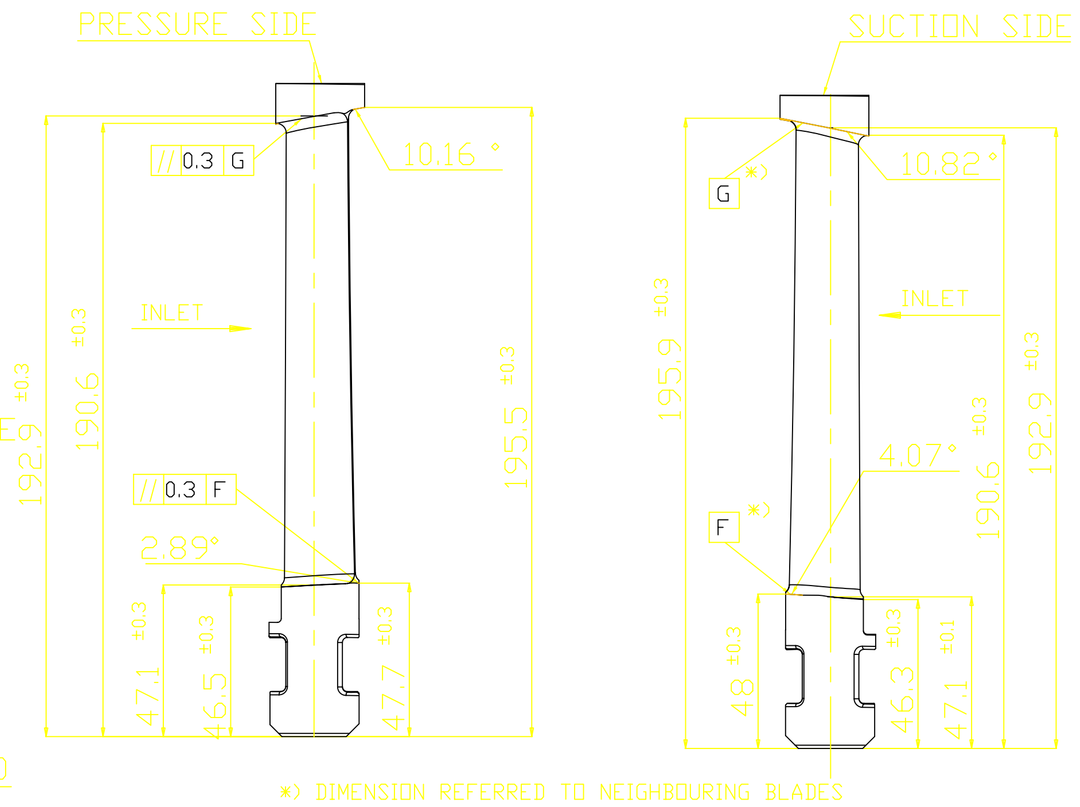

EXECUTION : 00 "L"

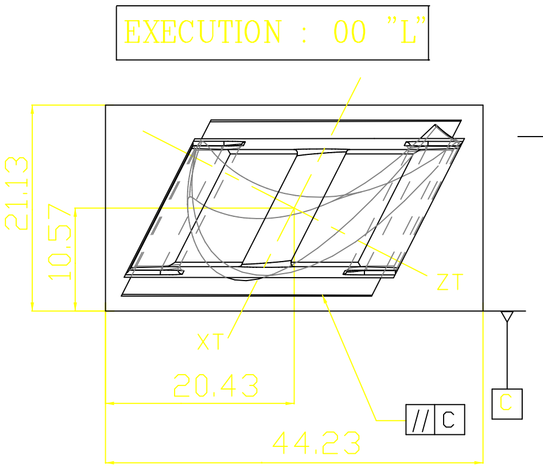

CENTRE DISTANCES IN SEMI FINISHED CONDITION

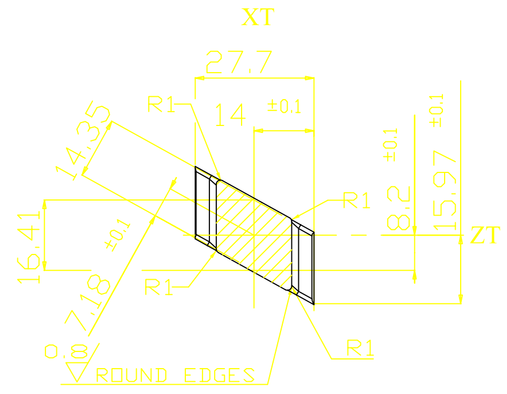

ALL DIMENSIONS REFERRED TO "Rmin"

SECTION C-C

TOLERENCES

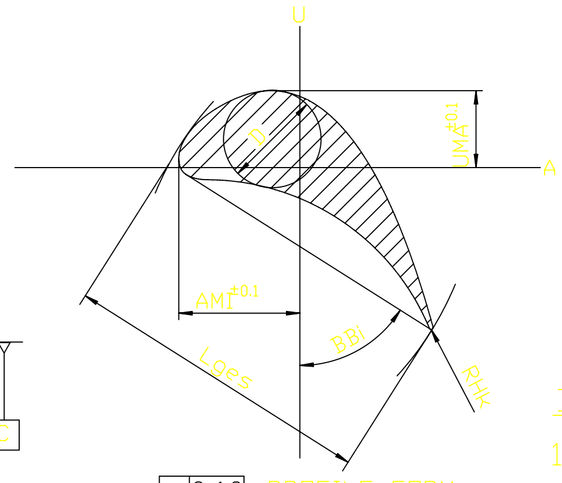

0.10 PROFILE FORM

± 0.10 PROFILE THICKNESS

± 0.30 PROFILE ANGLE

+0.04 −0.02 PITCH

SECTION AX	Hx	Lges	AMI	UMA	RHk	BBi	D
A1 - A1	-10.0	27.17	9.27	6.68	0.14	58.70	9.22
A2 - A2	0.0	27.20	9.20	6.75	0.14	57.20	9.03
A3 - A3	10.0	27.26	9.14	6.84	0.14	55.73	8.85
A9 - A9	70.0	28.18	8.88	7.64	0.15	47.64	7.80
A15 - A15	130.0	30.04	8.67	8.48	0.16	41.00	6.56

LOCAL SMALLEST RADIUS OF CURVATURE ON PRESSURE SIDE: 17.7 MM

EXECUTION : 00 "L"

L

"LEFT" AS SHOWN

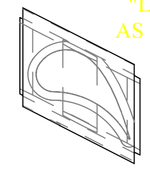

BLADE SEEN IN THE DIRECTION OF FLOW

EXECUTION : 01 "L"

LOCK BLADE

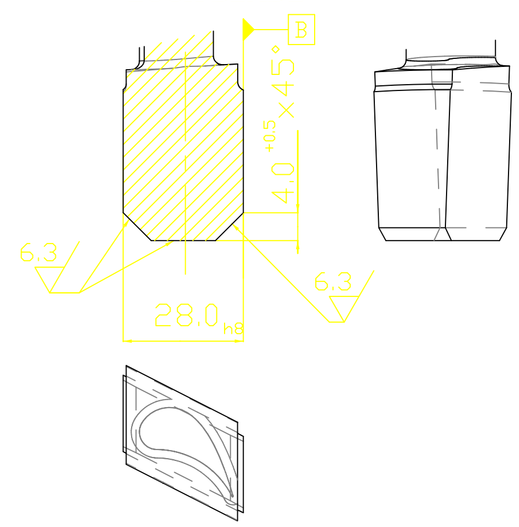

NOTES

1) PROFILE COORDINATES AS PER DRAWING NO.: 0-101-02-62001-00

0.4	1	01	01
0.358	171	00	00
WEIGHT KG	NO. OF BLADES	EXECUTION	VAR.

TYPE OF PRODUCT OR NAME OF CUSTOMER/PROJECT

	NAME	SIGN.	DATE	NO.OF VAR.
DRN.	M R R		18.06.04	
CHD.	T S P		18.06.04	-NA-
APPD.	C.V.N.R		18.06.04	

DEPT. I.T.D CODE 415 | UNTOL. DIMS. GR. C/M/F | SCALE NTS | WEIGHT (KG) -N.A.- | REF. TO ASSY. DRG. -NA- | ITEM NO. -NA- | NO.OF ITEMS -NA-

TITLE MOVING BLADE IP18L F-002-R28-TR203/157B2M

CARD CODE -

DRAWING NO. L-101-02-62001 REV. 00

SHT. No 01 NO. OF SHT. 01

DRG. NO. L-101-02-62001 SH. 01 OF 01

THE INFORMATION ON THIS DOCUMENT IS NOT BE USED DIRECTLY OR INDIRECTLY IN ANY WAY DETRIMENTAL TO THE INTERE ST OF THE COMPAY

GENERAL DIMENSIONAL LIMITS,FITS & TO LERANCES AS PER HY02B0261

COMPUTER FILE NAME

REF. DRG. NO. LAKF_KLJAKNG KNYEL_LKGNG

SIGN AND DATE

INVENTORY NO

REV.	DATE	ALTERED CHD/APPD	ZONE

FIRST ANGLE PROJECTION

(ALL DIMENSIONS ARE IN mm)

DRG. NO. 1-10306-41006

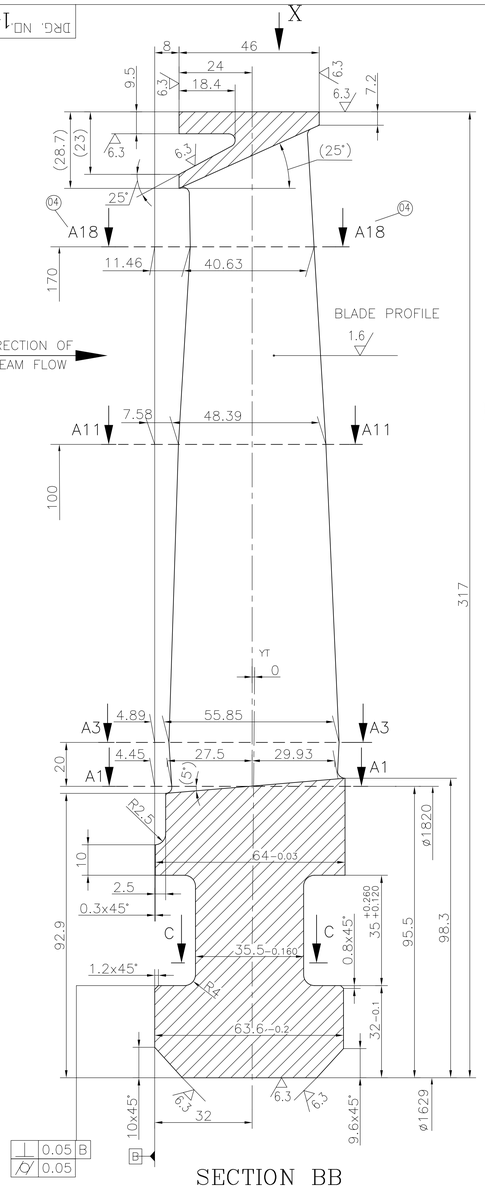

SECTION BB

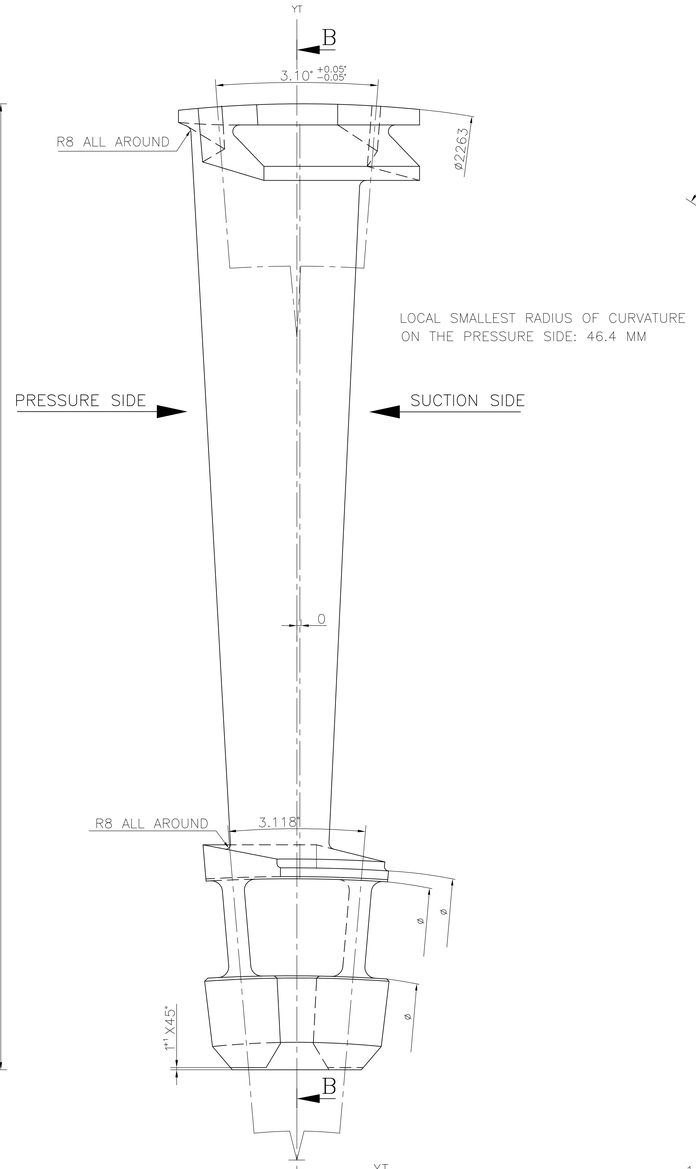

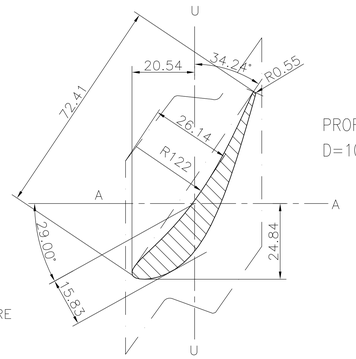

PROFILE THICKNESS
D=10.71

SECTION A18A18

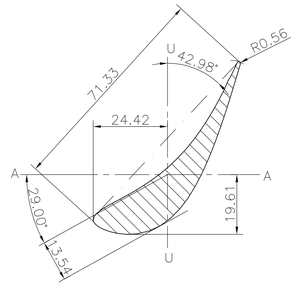

PROFILE THICKNESS
D=14.11

SECTION A11A11

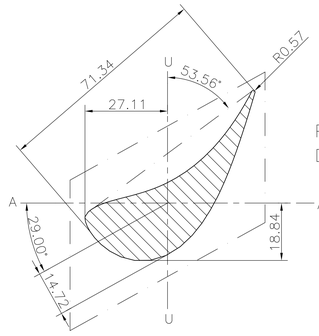

PROFILE THICKNESS
D=22.24

SECTION A3A3

3.2 ALL OVER EXCEPT OTHERWISE STATED

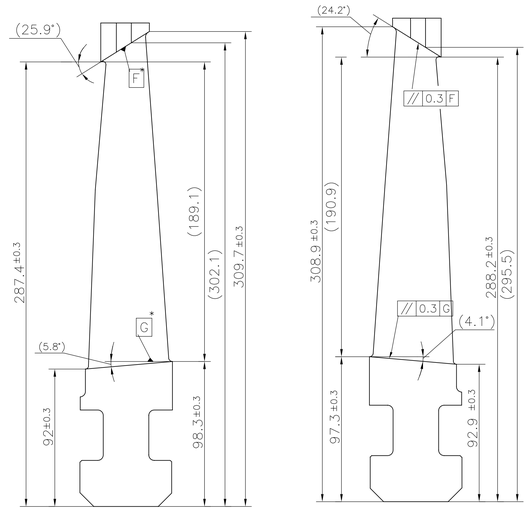

DIMENSION FOR

SUCTION SIDE PRESSURE SIDE

* WITH RESPECT TO THE NEIGHBOURING (ADJACENT) BLADE

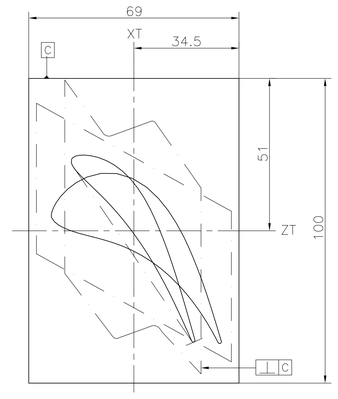

SEMI FINISHED IN CENTER POSITION

TECHINICAL REQUIREMENTS:

1. TOLERENCES
   - 0.25 PROFILE FORM
   - ±0.25 PROFILE THICKNESS
   - +0.25 -0.50 PROFILE LENGTH
   - ±0.30 PROFILE ANGLE
   - ⊕ 0.20 U A SHIFTING OF CENTRE POSITION
2. PROFILE DRG. NO. 01030641021
3. NO. OF BLADE/ROW 116 (INCLUDING LOCK BLADE)

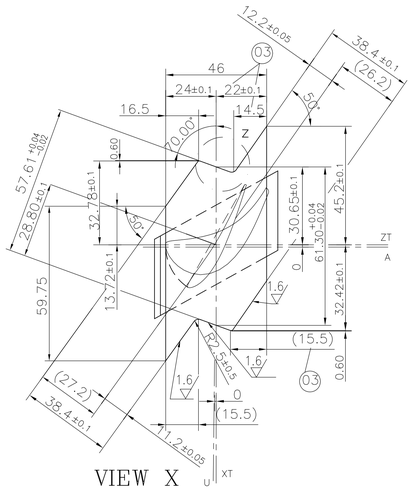

VIEW X

ALL DIMENSION CORRESPONDS TO ø2263

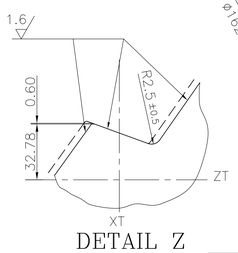

DETAIL Z

ROUND EDGES 0.63

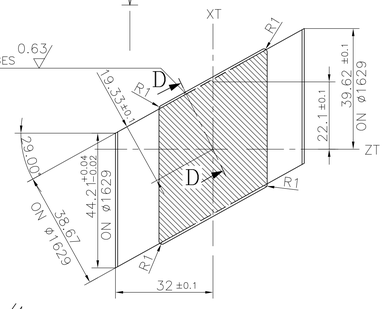

SECTION DD

SECTION CC

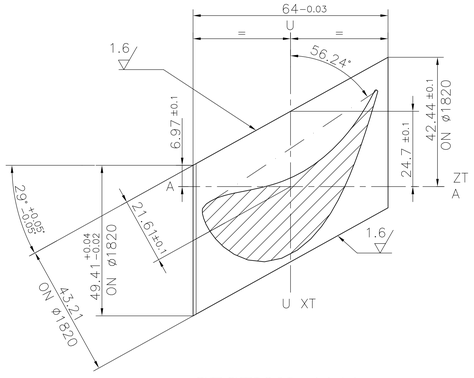

SECTION A1A1

SUPERSEDES OLD DRAWING UNDER THE SAME NUMBER

R

GRADE OF UNTOL.DIM
M/CG.-℄/M/F AA0230208
WELDING-A/B/℄/P AA0621104
GAS CUTTING-'T3'AA0621101

~~GMS No.~~ / C.B.O.M.- NO. 11030641000			STATUS OF DRG
AGREED DEPT	NAME	SIGN	DATE
TBM	B.DAS	Sd/-	21.5.99

TYPE OF PRODUCT OR NAME OF CUSTOMER/PROJECT: STEAM TURBINE

BHARAT HEAVY ELECTRICALS LTD. RANIPUR, HARDWAR

	NAME	SIGN	DATE	NO. OF VAR
DRN	HANS LAL	Sd/-	3.9.98	
CHD	P.K.BANSAL	Sd/-	4.9.98	
APPD	T.K.GHOSH	Sd/-	16.7.99	73 74

DEPT STE	SCALE	WEIGHT (KG)	REF. TO ASSY. DRG.	ITEM No.	NO. OF ITEMS
CODE 4011	N.T.S.	3.100	11030641000	–	75 77

TITLE : MOVING BLADE 3R F133-69/74-220-56.24°

CARD CODE

DRAWING NO. 1-10306-41006 (7 22 23 24)

SHEET No. 1 No. OF SHEETS 1

REV	DATE	ALTERED HANS LAL Sd/- CHECKED P.K.BANSAL Sd/-
04	9.7.05	-IN SECTION BB A18-A18 WAS A16-A16 (STE-05-F0139)
03	4.5.04	ALTERED HANS LAL Sd/- CHECKED P.K.BANSAL Sd/- -IN VIEW X DIMENSIONS 22, 14.5 & 15.5 WAS 24, 16.5 & 15.97 RESPECTIVELY. (STE-04-F0133)
02	5.12.03	ALTERED HANS LAL Sd/- CHECKED P.K.BANSAL Sd/- 4. IN SECTION A1A1 -PITCH TOLERANCES ADDED ON DIMENSIONS 49.41,21.61,6.97,24.7 & 42.44 -ON ANGLE 29°, TOLERANCE ±0.05° ADDED 5. IN SECTION CC -PITCH TOLERANCES ADDED ON DIMENSIONS 44.21,19.33,22.1 & 39.62 (STE-03-F1301)
02	5.12.03	ALTERED HANS LAL Sd/- CHECKED P.K.BANSAL Sd/- 1. TAPER VALUE TABLE DELETED 2. IN T.R. -TOLERANCE ON PROFILE CAHNGED FROM ±0.25 -TOLERANCE ON PITCH DELETED -TOLERANCE ON SHIFTING OF CENTRE ADDED 3.TOLERANCE ON TAPER ANGLE 3.10' ADDED (STE-03-F1301)
01	05.07.2002	ALTERED HANS LAL Sd/- CHECKED P.K.BANSAL Sd/- THIS DRAWING SUPERSEDES UNDER THE SAME NUMBER WITHOUT ANY CHANGE. REVISED DRAWING DEPOSITED IN AWC SERVER. (STE-02-1115)

THE INFORMATION ON THIS DOCUMENT IS THE PROPERTY OF BHARAT HEAVY ELECTRICALS LIMITED.
IT MUST NOT BE USED DIRECTLY OR INDIRECTLY IN ANY WAY DETRIMENTAL TO THE INTREST OF THE COMPAY

INVENTORY NO | SIGN. AND DATE | REF. DRG. NO. 7629-34611

FIRST ANGLE PROJECTION

(ALL DIMENSIONS ARE IN mm)

DRG. NO. 1-105-18-62003 SH.01 OF 01

DIRECTION OF STEAM FLOW

2xZ COMMON TOLERANCE ZONE

| 0.05 B
// 0.05

EXECUTION : 02 "R"

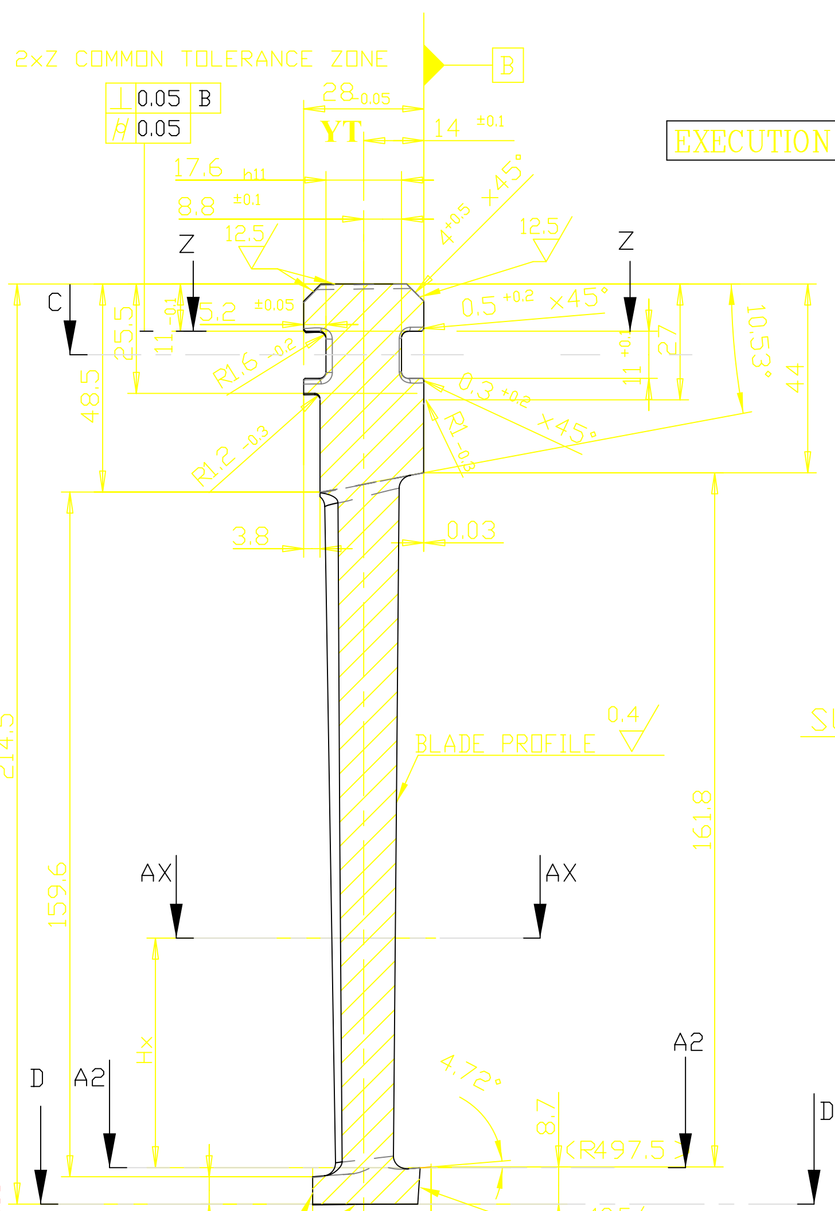

SCHEME FOR S & D DIMENSIONS

(SCALE 1:2)

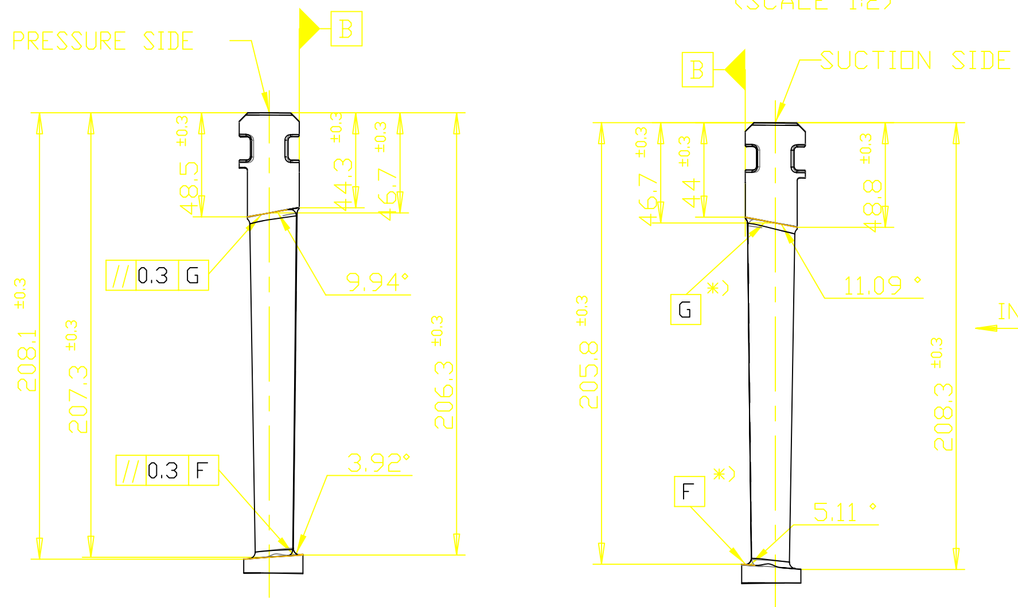

3.2 12.5 1.6 0.4

BLADE SEEN IN STEAM FLOW DIRECTION

EXECUTION : 00 "L"

L

"LEFT"
AS SHOWN

EXECUTION : 02 "R"

R

"RIGHT"
MIRROR INVERTED

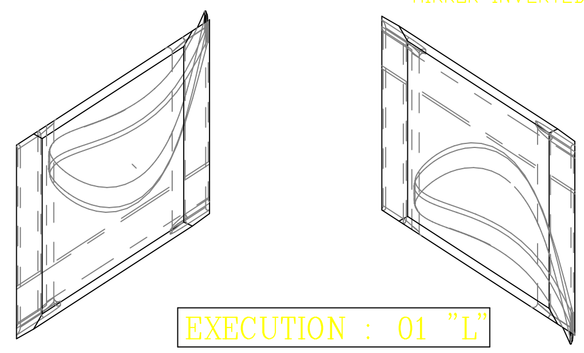

EXECUTION : 01 "L"

GUIDE BLADES AT JOINT PALNE (2 NO.)
MADE BY REWORKING ON DESIGN: VAR 01 "L"

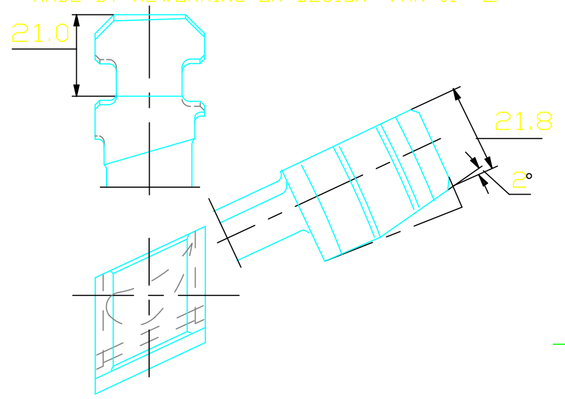

EXECUTION : 03 "R"

GUIDE BLADES AT JOINT PALNE (2 NO.)
MADE BY REWORKING ON DESIGN: VAR 02 "R"

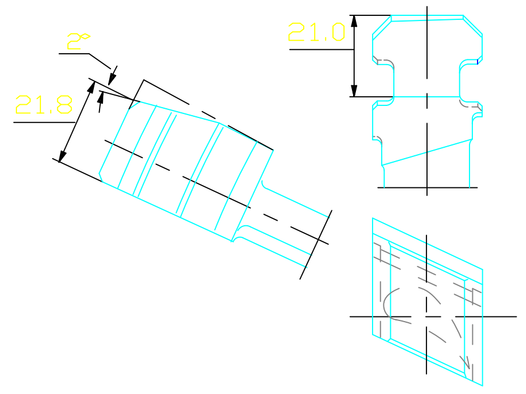

CENTRE DISTANCES IN SEMI FINISHED CONDITION

EXECUTION : 02 "R"

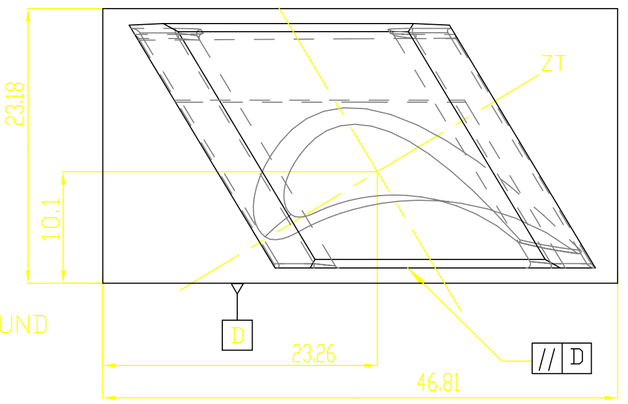

EXECUTION : 00 "L"

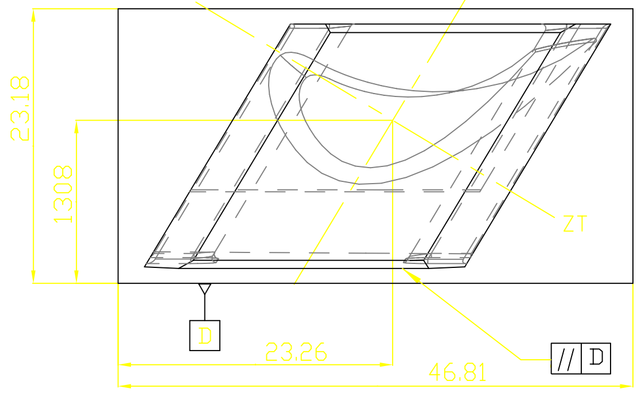

EXECUTION : 00 "L"

TOLERENCES

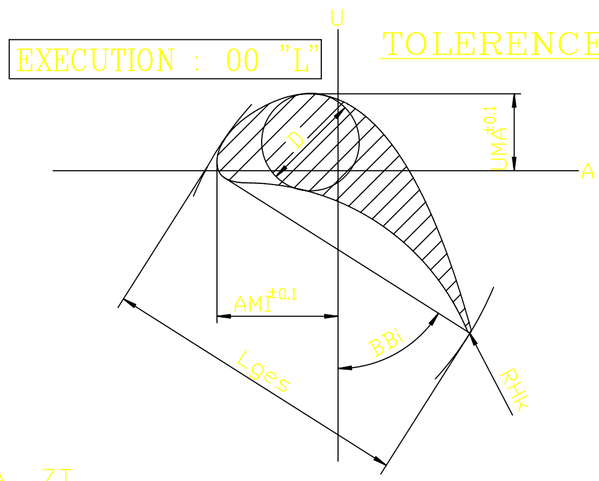

0.10 PROFILE FORM
± 0.10 PROFILE THICKNESS
± 0.30 PROFILE ANGLE
+0.04 -0.02 PITCH

NOTES

1) PROFILE COORDINATES AS PER DRAWING NO.: 0-105-18-62003-00

SECTION AX	Hx	Lges	AMI	UMA	RHk	BBi	D
A1 - A1	-10.0	22.57	6.39	5.74	0.12	52.50	7.27
A2 - A2	0.0	23.04	6.55	5.87	0.12	52.25	7.42
A3 - A3	10.0	23.51	6.72	6.00	0.13	52.01	7.57
A10 - A10	80.0	26.76	7.88	6.91	0.14	50.32	8.63
A17 - A17	150.0	30.02	9.01	7.83	0.16	48.64	9.68

LOCAL SMALLEST RADIUS OF CURVATURE ON PRESSURE SIDE: 14.8 MM

WEIGHT(KG)	NO. OF BLADES	EXECUTION	VAR
0.426	2	03	03
0.426	166	02	02
0.426	2	01	01
0.426	166	00	00

TYPE OF PRODUCT OR
NAME OF CUSTOMER/PROJECT

	NAME	SIGN.	DATE	NO.OF VAR.
DRN.	MRR		09.06.04	-N.A-
CHD.	TSP		09.06.04	
APPD.	CNVR		09.06.04	

DEPT. I.T.D CODE 415	UNTOL. DIMS. GR. C/M/F		SCALE NTS	WEIGHT (KG) -N.A-	REF. TO ASSY. DRG. -N.A-	ITEM NO. -N.A-	NO.OF ITEMS -N.A-

TITLE GUIDE BLADE IP 20L F005-S28-TR214/162B2M

CARD CODE N.A.

DRAWING NO. 1-105-18-62003 REV. 00

SHT. No 01 ND. OF SHT. 01

ALTERED	REV.	DATE	ALTERED	REV.	DATE	ALTERED	REV.	DATE	ALTERED	REV.	DATE	ALTERED	REV.	DATE	ALTERED	REV.	DATE	ALTERED	REV.	DATE	ALTERED	REV.	DATE
CHD/APPD			CHD/APPD			CHD/APPD			CHD/APPD			CHD/APPD			CHD/APPD			CHD/APPD			CHD/APPD		
	ZONE			ZONE			ZONE			ZONE			ZONE			ZONE			ZONE			ZONE	

THE INFORMATION ON THIS DOCUMENT IS NOT BE USED DIRECTLY OR INDIRECTLY IN ANY WAY DETRIMENTAL TO THE INTERE ST OF THE COMPANY CALS LIMITED. IT MUST

GENERAL DIMENSIONAL LIMITS,FITS & TO LERANCES AS PER HY02B0261

INVENTORY NO | SIGN. AND DATE | REF. DRG. NO. | COMPUTER FILE NAME

FIRST ANGLE PROJECTION

(ALL DIMENSIONS ARE IN mm)

SH. 01 OF 01 DRG. NO. 1-303-19-00019

Pos No. 1

SECTION B-B

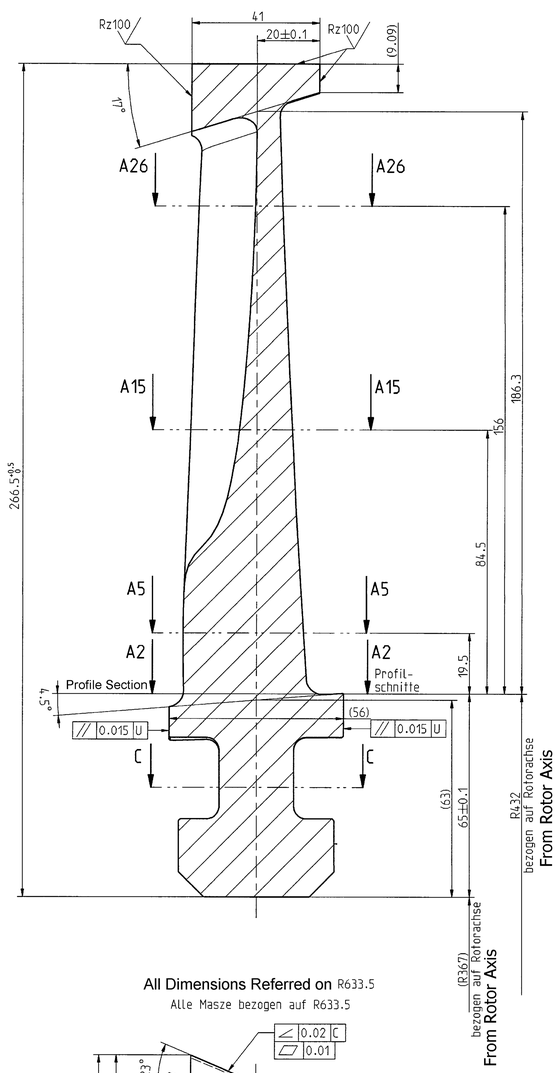

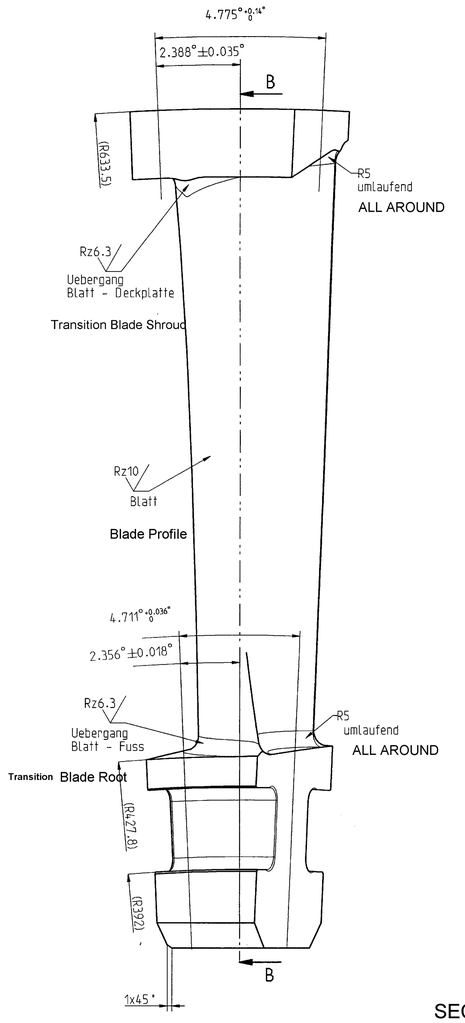

All Dimensions Referred on R633.5

Alle Masze bezogen auf R633.5

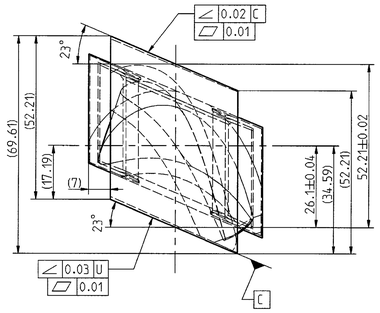

SECTION C - C

Alle Masze bezogen auf R367

All Dimensions Referred on R367

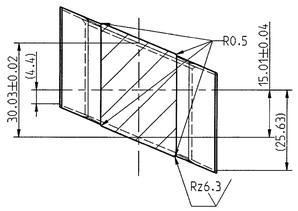

SECTION A2 - A2

Alle Masze bezogen auf R432

All Dimensions Referred on R432

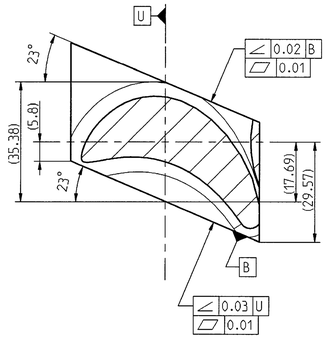

SCHEME OF DIMENSIONS

PRESSURE SIDE

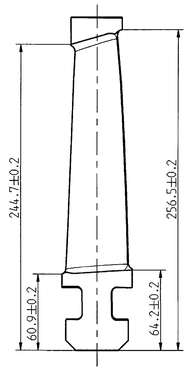

SUCTION SIDE

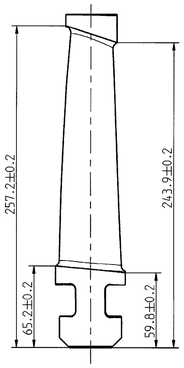

PROFILE TOLERANCE FOR THE CHECKING SECTIONS **AX-AX**

Profiltoleranzen

für die Prüfschnitte AX-AX

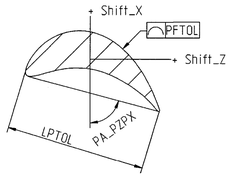

PFTOL	0.20
Shift_X	+0.40 -0.20
Shift_Z	+0.40 -0.20
PA_PZPX	±0.20°
LPTOL	+0.20 -0.40

ROOT DETAIL

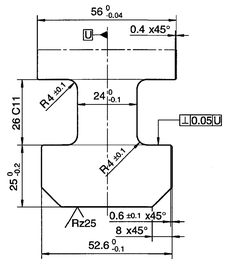

L — LINKS — LEFT

R — RECHTS — RIGHT

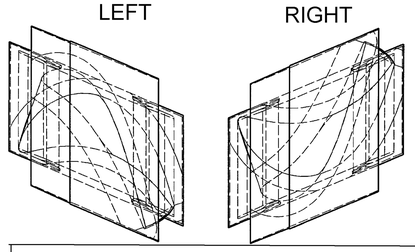

Endschaufeln **LOCK BLADE**

fehlende Maße Endschaufel siehe Laufschaufel

Pos No. 2

Sachnummer	Drehrichtung
4-4920-2211-00	LINKS
4-4920-2201-00	RECHTS

SECTION E-E

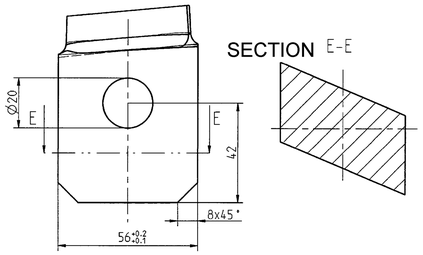

NOTES:

1. Profile co-ordinates a per Drg No. 0-303-19-00005-00.
2. Profile Checking Sections A5, A15,A26.
3. Final Machining as per Blading Plan.
4. Total No. of Blades including Lock Blade : 77 Pieces.
5. For 250mm Length Sin Bar: Ey for Half Angle = 9.579.
   Ey for Full Angle = 19.185.

DESCRIPTION / MATERIAL SPEC	POS. NO.	DESCRIPTION	VAR
Flat 95X70 / X20Cr13V	2	Lock Blade-Right	03
	1	Normal Blade-Right	02
	2	Lock Blade-Left	01
	1	Normal Blade-Left	00

TYPE OF PRODUCT OR NAME OF CUSTOMER/PROJECT

	NAME	SIGN	DATE	NO OF VAR
DRN	HARISH		08.09.07	NA
CHD	T.S.Prabhakar		08.09.07	
APPD	C.N.V.Ramana		08.09.07	

DEPT ITD	UNTOL DIMS GR	SCALE	WEIGHT (KG)	REF TO ASSY DRG	ITEM NO	NO OF ITEMS
CODE 415	C/M/F	NTS	1.56	NA	NA	NA

TITLE **L P MOVING BLADE-1 (SL 2.2 SQM)**

CARD CODE

DRAWING NO. **1-303-19-00019** REV 00

SHT No 01 NO OF SHT 01

ALTERED	REV	DATE	ALTERED	REV	DATE	ALTERED	REV	DATE	ALTERED	REV	DATE	ALTERED	REV	DATE	ALTERED	REV	DATE	ALTERED	REV	DATE	ALTERED	REV	DATE	ALTERED
CHD/APPD			CHD/APPD			CHD/APPD			CHD/APPD			CHD/APPD			CHD/APPD			CHD/APPD			CHD/APPD			CHD/APPD
	ZONE			ZONE			ZONE			ZONE			ZONE			ZONE			ZONE			ZONE		

THE INFORMATION ON THIS DOCUMENT IS THE PROPERTY OF IT MUST NOT BE USED DIRECTLY OR INDIRECTLY IN ANY WAY DETRIMENTAL TO THE INTEREST OF THE COMPANY

GENERAL DIMENSIONAL LIMITS, FITS & TOLERANCES AS PER HY0230261

INVENTORY NO | SIGN AND DATE | REF DRG NO 0-2128-2201-00/M | REV-A | COMPUTER FILE NAME

Rz 16 = 0.8 (Rz 6.3 = 0.4 , Rz 10 = 0.8 , Rz 25 = 1.6 , Rz 100 = 12.5)

FIRST ANGLE PROJECTION

(ALL DIMENSIONS ARE IN mm)

DRG. NO. 3-303-21-00060

SH. 01 OF 01

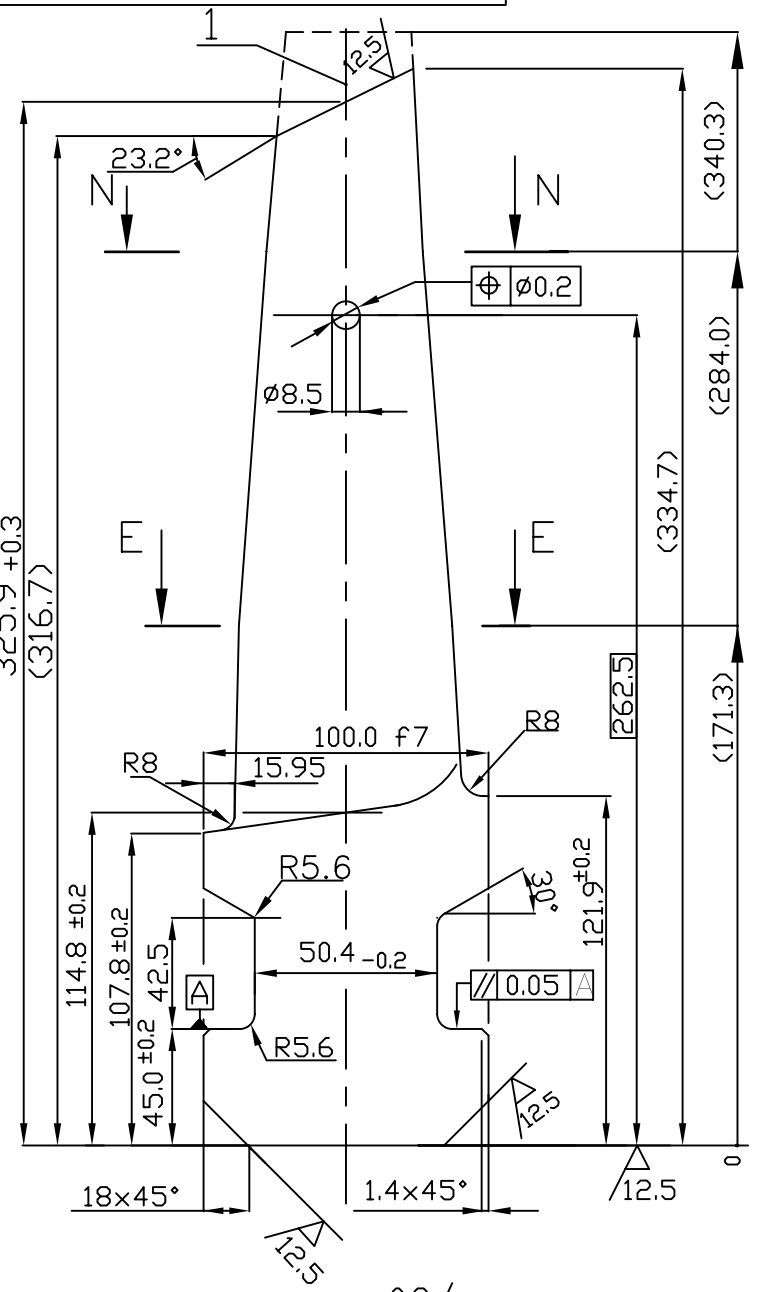

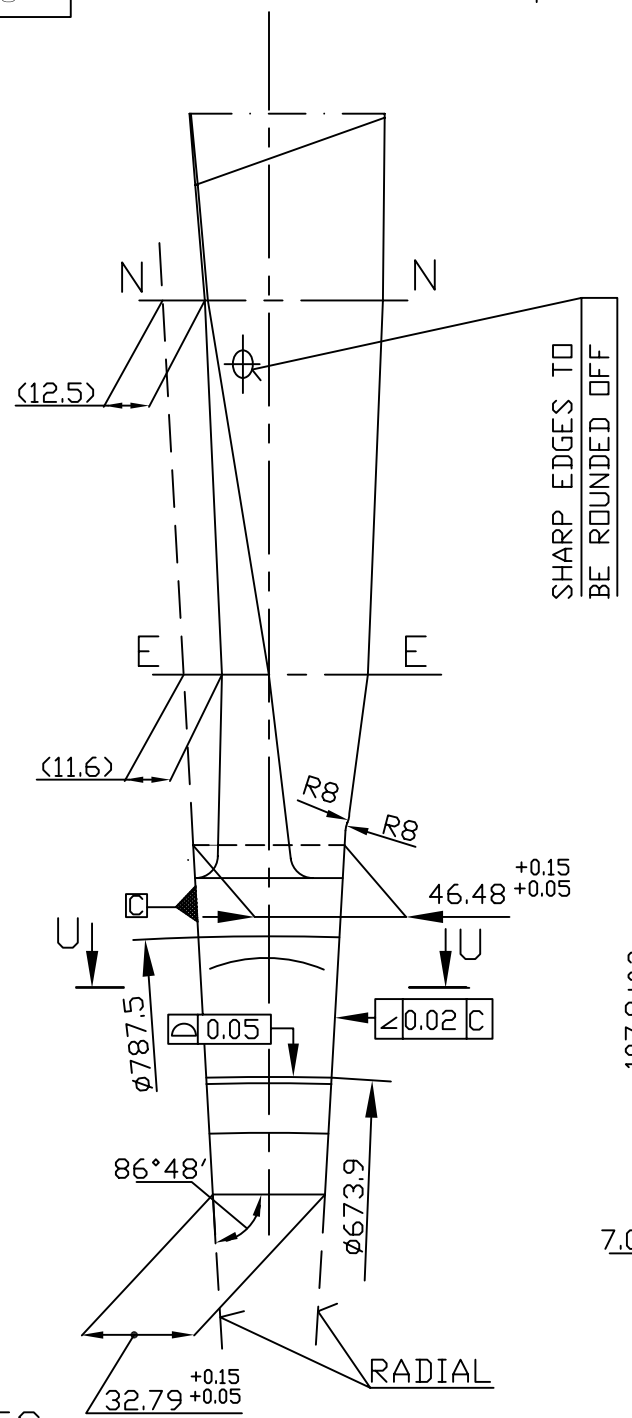

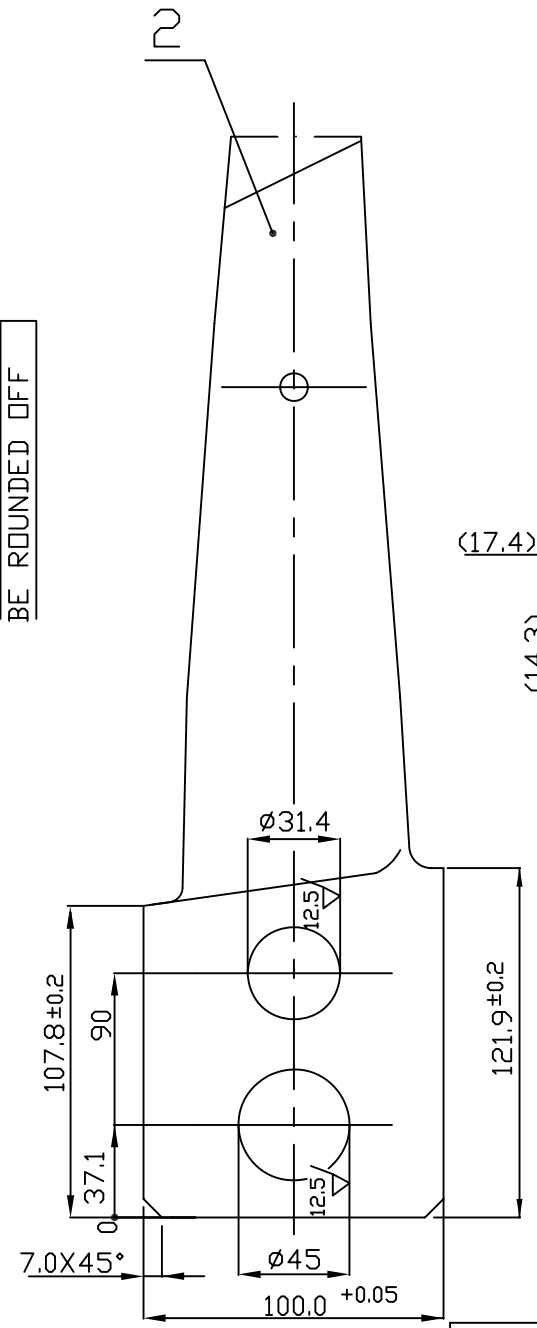

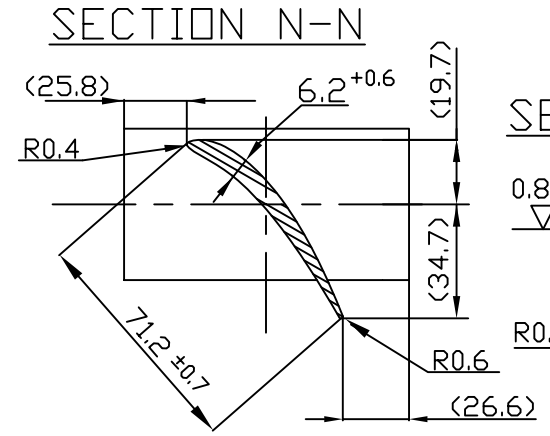

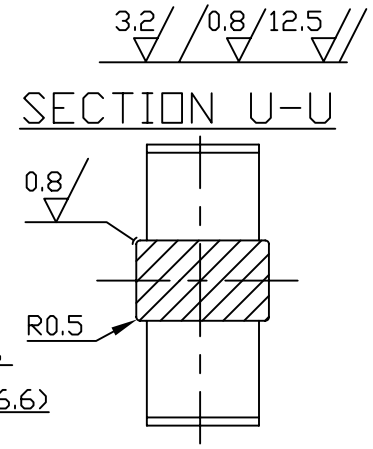

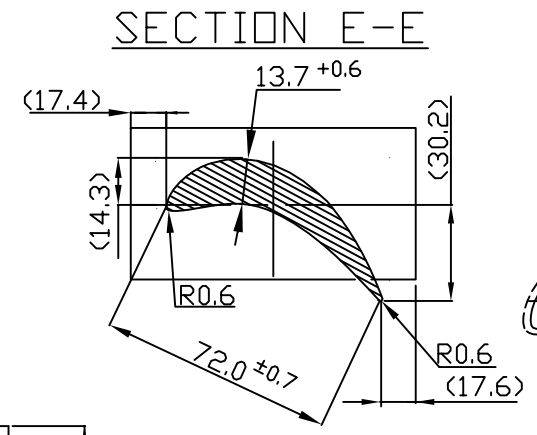

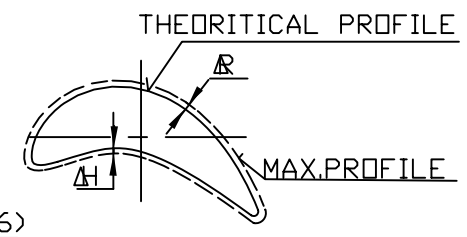

ΔRmax = 0.8 ΔRmin = 0 ΔHmax = 0.2

ΔHmin = 0 max difference ΔR= 0.4

Σ(ΔR + ΔH)max =0.8 Σ(ΔR+ΔH)min= 0.2

DIRECTION ROTATION IS ANTI-CLOCK WISE WHEN SEEN IN THE DIRECTION OF STEAM FLOW.

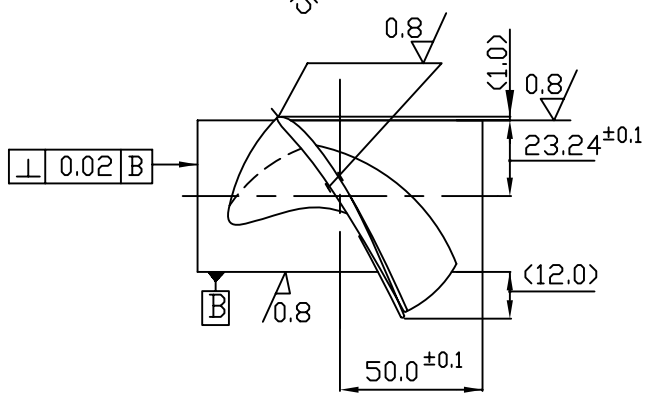

NOTES:

1. PROFILE CO-ORDINATES AS PER DRG.No.1-303-21-00003-00 (2Sh)
2. FINAL MACHINING AS PER BLADING PLAN.
3. MISSING DIMENSIONS OF Pos.No.2. TO BE SEEN IN Pos.No.1.
4. EY FOR FULL ANGLE = 28.02
   EY FOR HLAF ANGLE = 14.03

FL.110 x 75	HY10764	3.35	1	2	-00
FL.110 x 75		3.35	55	1	
DESCRIPTION	Mat. Spc.	Wt.	No.Of Pcs.	POS.	VAR.

TYPE OF PRODUCT OR NAME OF CUSTOMER/PROJECT

	NAME	SIGN.	DATE	NO.OF VAR.
DRN.	T S PRABHAKAR		18.10.2004	-N.A-
CHD.	T S PRABHAKAR		18.10.2004	
APPD.	CNV RAMANA		18.10.2004	

DEPT. I.T.D.	UNTOL. DIMS. GR. ~~C/M/F~~		SCALE N.T.S	WEIGHT (KG) -N.A-	REF. TO ASSY. DRG. -N.A.-	ITEM NO. -N.A.-	NO.OF ITEMS -N.A.-
CODE 415							

TITLE LP MOVING BLADE SK 80-2 LEFT

CARD CODE N.A.

DRAWING NO. 3-303-21-00060 REV. 00

SHT. No 01 NO. OF SHT. 01

REV.	DATE	ALTERED CHD/APPD	REV.	DATE	ALTERED CHD/APPD	REV.	DATE	ALTERED CHD/APPD
ZONE			ZONE			ZONE		

INVENTORY NO | SIGN. AND DATE | REF. DRG. NO. 4-2234-1905-00 | REV: E | COMPUTER FILE NAME

GENERAL DIMENSIONAL LIMITS, FITS & TOLERANCES AS PER HY0230261