FIRST ANGLE PROJECTION

(ALL DIMENSIONS ARE IN mm)

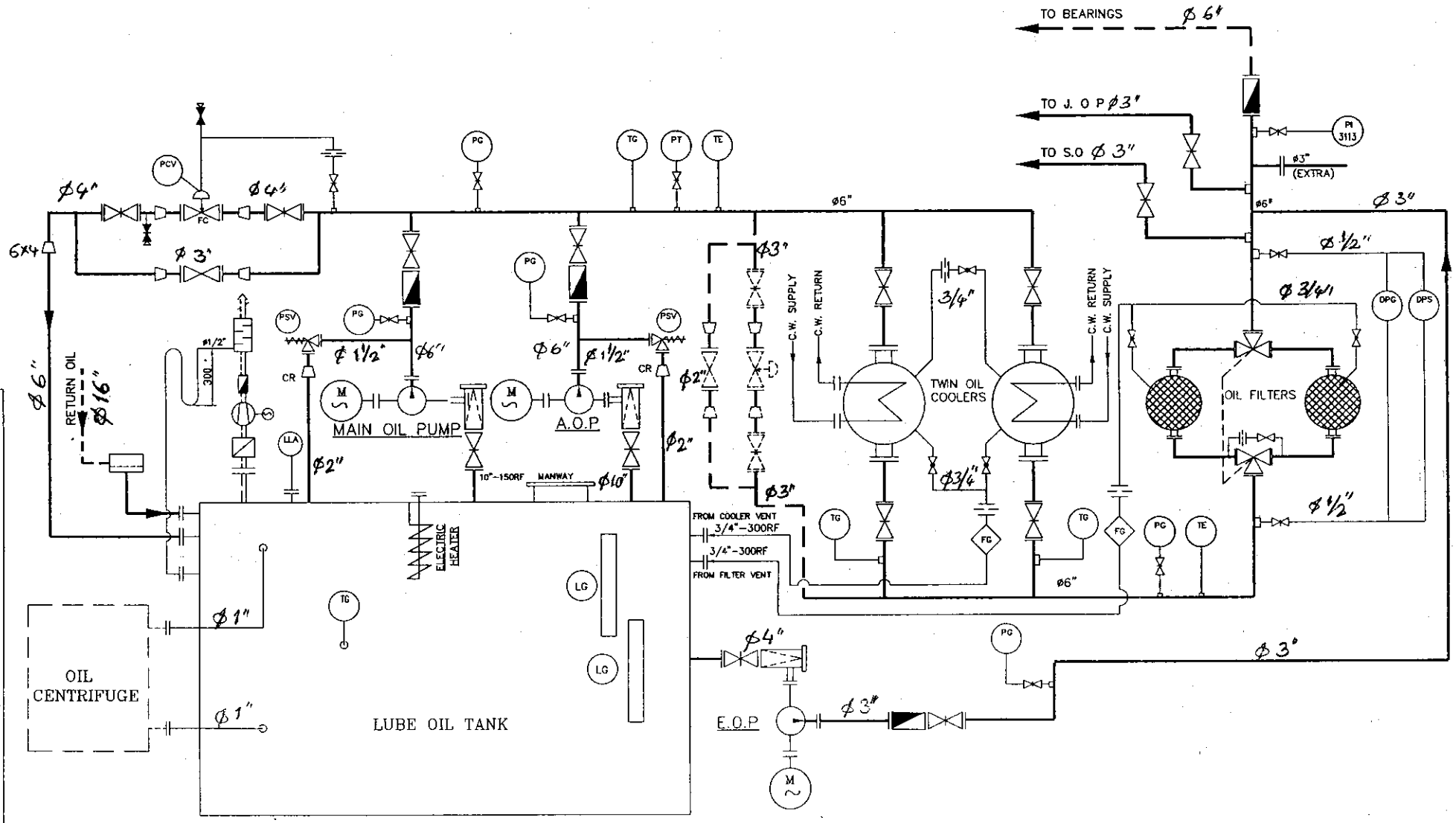

TYPE OF PRODUCT
OR
NAME OF CUSTOMER/PROJECT

BHARAT HEAVY ELECTRICALS LTD
HYDERABAD

	NAME	SIGN.	DATE	NO.OF VAR.
DRN.				
CHD.				
APPD.				

THE PIPING DIAGRAM FOR LUBE OIL CONSOLE

REV. 00

THE INFORMATION ON THIS DOCUMENT IS THE PROPERTY OF BHARAT HEAVY ELECTRICALS LIMITED. IT MUST NOT BE USED DIRECTLY OR INDIRECTLY IN ANY WAY DETRIMENTAL TO THE INTEREST OF THE COMPANY

GENERAL DIMENSIONAL LIMITS, FITS & TOLERANCES AS PER HY0230261

DRG. NO.

SH. 01 OF 01