Bharat Heavy Electricals Limited

Heavy Equipment Repair Plant

Tarna Shivpur Varanasi-221003
website: https://herp.bhel.com

Enquiry Number : **E-RC-304-24-0559-61-1** Date : **27/Dec/2024**

Enquiry For Material :-

Sl No	Material Description	Material Code	Quantity	Unit
1	STAR WHEEL (HY-4.06) - FULLY M/CD GCI CASTING AS PER DRG. 46137600096/03 WITH MATL AS PER SPECN. AA19702/06	RV1970100257	200.0	NOS.
2	MILL SIDE INSP. DOOR (HY-209.01) FULLY M/CD GCI CASTING AS PER DRG. 36127600042/06 WITH MATL AS PER SPECN. AA19702/06	RV1970100591	18.0	NOS.
3	T.S.END CAP - FE (HY-903.03) - FULLY M/CD GCI CASTING AS PER DRG. 16108801034/03 WITH MATL. AS PER SPECN. AA19702/06	RV1970101091	30.0	NOS
4	TS END CAP -TE (HY-903.10) - FULLY M/CD GCI CASTING AS PER DRG. 16108801035/03 WITH MATL. AS PER SPECN. AA19702/06	RV1970101105	26.0	NOS
5	M.S.B.LINER SET (HY-019.C) - FULLY M/CD CASTINGS AS PER DRG. HY-019.C WITH MATL AS PER SPECN. AA19702/06	RV1970101245	30.0	SET
6	LOWER BRG & PUMP HSG (HY-23.0) - FULLY M/CD GCI CASTING AS PER DRG. NO. 16117600083/04 WITH MATL AS PER SPECN. AA19703/06	RV1970200014	35.0	NOS.
7	UPPER JOURNAL HOUSING (HY-36.0) - FULLY M/CD GCI CASTING AS PER DRG. 26137690004/08 WITH MATL AS PER SPECN. AA19703/06	RV1970200081	250.0	NOS.
8	UPPER JOURNAL HSG.(HY-65.0) - FULLY M/CD GCI CASTING AS PER DRG. 36036000109/07 WITH MATL AS PER SPECN. AA19703/06	RV1970200170	45.0	NOS.
9	OIL COLLECTOR (HY-74.0) - FULLY M/CD OIL COLLECTOR AS PER DRG. 36117600012/05 WITH MATL AS PER SPECN. AA19703/06	RV1970200197	15.0	NOS.
10	TRUNNION SHAFT END CAP (FE) (HY-93.00) - FULLY M/CD GCI CASTING AS PER DRG. 16137600019/04 WITH MATL AS PER SPECN. AA19703/06	RV1970200227	108.0	NOS.
11	THRUST BEARING HOUSING (HY-148.0) - FULLY M/CD GCI CASTING AS PER DRG. 36117600005/08 WITH MATL AS PER SPECN. AA19703/06	RV1970200251	28.0	NOS.
12	LOWER BRG.& PUMP HOUSING COVER (HY-150.00) - FULLY M/CD GCI CASTING AS PER DRG. 26117600001/09 WITH MATL AS PER SPECN. AA19703/06	RV1970200303	15.0	NOS.
13	UPPER BRG.HSG.(HY-158.0) - FULLY M/CD GCI CASTING AS PER DRG. 36117600023/03 WITH MATL AS PER SPECN. AA19703/06	RV1970200324	15.0	NOS.
14	RADIAL BRG.HSG. (HY-168.0) - FULLY M/CD GCI CASTING AS PER DRG. 26117600006/09 WITH MATL AS PER SPECN. AA19703/06	RV1970200340	30.0	NOS.
15	UPPER BRG. HSG. - TIGHT FIT (HY-158.A) - FULLY M/CD GCI CASTING AS PER DRG. 26118090077/05 WITH MATL AS PER SPECN. AA19703/06	RV1970200430*	20.0	NOS.
16	TRAMP IRON SPOUT BODY (HY-182.01) FULLY M/CD GCI CASTING AS PER DRG. 16157600029/03 WITH MATL AS PER SPECN. AA19703/06	RV1970200456	11.0	NOS.
17	TRAMP SPOUT ADAPTOR (HY-182.02) - FULLY M/CD GCI CASTING AS PER DRG. 26157600057/03 WITH MATL AS PER SPECN. AA19703/06	RV1970200464	10.0	NOS.
18	SEP.ACCESS DOOR (HY-171.C.10) - FULLY M/CD GCI CASTING AS PER DRG. 36137600060/05 WITH MATL AS PER SPECN. AA19703/06	RV1970200599	40.0	NOS.
19	TRANISITION PIECE (TY-342.00) FULLY M/CD ITEM AS PER DRG 24720000123/02 WITH MATL AS PER SPECN. AA19703/06	RV1970200715	16.0	NOS.
20	TRAMP IRON SPOUT BODY (HY-350.01) - FULLY M/CD GCI CASTING AS PER DRG. 26110000566/05 WITH MATL AS PER SPECN. AA19703/06	RV1970200839	96.0	NOS
21	T.S.END CAP-TE 'VAR-01' (HY-313.04) - FULLY M/CD GCI CASTING AS PER DRG. 16100000257/05 WITH MATL AS PER SPECN. AA19703/06	RV1970200906	20.0	NOS
22	T.S.END CAP-FE 'VAR-01' (HY-313.05) - FULLY M/CD GCI CASTING AS PER DRG. 16100000256/06 WITH MATL AS PER SPECN. AA19703/06	RV1970200914	20.0	NOS
23	T.S.END CAP-TE 'VAR-02' (HY-313.04.A) - FULLY M/CD GCI CASTING AS PER DRG. 16100000257/05 WITH MATL AS PER SPECN. AA19703/06 (WITH METRIC THREAD)	RV1970200922	76.0	NOS
24	T.S. END CAP - THRUST END (HY-1102.03) - FULLY M/CD GCI CASTING AS AS PER DRG. 16100401191/02 WITH MATL AS PER SPECN. AA19703/06	RV1970200973	21.0	NOS

25	FULLY MACHINED T.S.END CAP -FREE END (HY-1102.10) AS AS PER DRG. 16100401192/01 WITH MATL. AS PER SPECN. AA19703/06	RV1970200981	25.0	NOS
26	FULLY MACHINED TRUNION BUSHING RETAINER (HY-1102.09) AS AS PER DRG. 36100402324/01 WITH MATL AS PER SPECN. AA19703/06	RV1970200990*	60.0	NOS
27	UPPER SKIRT ASSY (HY-24.0) - FULLY M/CD & ASSEMBLED GCI CASTING AS PER DRG. 26117600022/05 WITH MATL AS PER SPECN. AA19703/06	RV1970205130*	25.0	NOS.

Remarks

Remarks
(A) SCOPE OF SUPPLY:-

1. THIS INDENT HAS BEEN RAISED FOR ENTERING INTO FRAMEWORK AGREEMENT WITH VENDORS FOR GCI CASTING (FINISH MACHINED). SEPARATE INDENTS WILL BE GIVEN TIME TO TIME AS PER REQUIREMENT FOR PLACING THE PO UNDER THIS RC. ITEM QUANTITY MENTIONED IN THE INDENT IS TENTATIVE & IT MAY INCREASE OR DECREASE AS PER OUR FINAL REQUIREMENT.
2. RATES OF ITEMS AGAINST FA WILL BE FIRM & VALID FOR ORDERING FOR A PERIOD OF ONE YEAR FROM THE DATE OF AGREEMENT. PRICE VARIATION CLAUSE (PVC) IS NOT ACCEPTABLE.AFTER FINALIIZATION OF RATE CONTRACT, PO QUANTITY WILL BE PLACED AS PER REQUIREMENT.

(B) SUPPLY CONDITION :
1. ITEM TO BE SUPPLIED AT BHEL HERP STORES.
2. PRE-DESPATCH INSPECTION WILL BE CARRIED OUT AT PARTY'S WORKS BY BHEL REPRESENTATIVE AS PER QUALITY PLAN MENTIONED BELOW:-

a.)FOR ITEM SPEC. AA19702- AS PER QUALITY PLAN RV/C&F/12
b)FOR ITEM SPEC. AA19703- AS PER QUALITY PLAN RV/C&F/09

(C) TECHNICAL DELIVERY CONDITION :
1. MATERIAL SHOULD BE AS PER SPECIFICATION MENTIONED IN THE DESCRIPTION/DRG.
2. DIMENSIONS AND TOLERANCES TO BE MAINTAINED AS PER DRG.
3. CASTING SHOULD BE FREE FROM ALL DEFECTS.
4. H.T CHART IS REQUIRED.
5. DIMENSION REPORT IS REQUIRED.
6. ALL TECHNICAL REQUIREMENT MENTIONED IN THE DRG MUST BE STRICTLY FULFILLED.
7. STANDARD FASTENERS SHOULD BE MADE OF 'TVS/UNBRAKO/LPS/CAPARO OR ITS EQUIVALENT ' MAKE ONLY.(WHERE APPLICABLE)

(D) TEST CERTIFICATE: REQUIRED FOR CHEMICAL & MECHANICAL PROPERTIES OF RAW MATL.

(E) GUARANTEE CERTIFICATE: REQUIRED FOR 24 MONTHS AGAINST ANY MANUFACTURING DEFECTS.

(F) PACKING INSTRUCTIONS: ITEM SHOULD BE PROPERLY PACKED IN WOODEN CRATE OF 1" THICK PLANK WITH 1.5"X4" BRACKET AFTER APPLYING GREASE AND RUST PREVENTIVE PAINT.

(G) RATE CONTRACT VALIDITY: FOR 1 (ONE) YEAR FROM THE RC-PO DATE.

(H) SPECIAL REMARKS:

1. ITEM WISE MAXIMUM QTY IN EACH LOT (WHICH MAY BE REQUIRED IN A PARTICULAR ORDER) WILL BE AS MENTIONED IN ANNEXURE--RC-LOT-BA17.
2 .DELIVERY IS WITHIN 04 MONTHS FROM DATE OF PO FOR FIRST LOT.THERE WILL BE A GAP OF 01 MONTH BETWEEN TWO CONSECUTIVE LOTS. EARLY DELIVERY IS ACCEPTABLE.

(I) TENDER WILL BE EVALUATED ITEM WISE i.e. L1 WILL BE DECIDED FOR EACH INDIVIDUAL ITEM AND NOT ON TOTALITY BASIS.

(J) REVERSE AUCTION SHALL BE CARRIED OUT. BHEL SHALL BE RESORTING TO REVERSE AUCTION (RA) (GUIDELINES AS AVAILABLE ON WWW.BHEL.COM) FOR THIS TENDER. RA SHALL BE CONDUCTED AMONG ALL THE TECHNO? COMMERCIALLY QUALIFIED BIDDERS. PRICE BIDS OF ALL TECHNO? COMMERCIALLY QUALIFIED BIDDERS SHALL BE OPENED AND SAME SHALL BE CONSIDERED AS INITIAL BIDS OF BIDDERS IN RA. IN CASE ANY BIDDER(S)DO (ES) NOT PARTICIPATE IN ONLINE REVERSE AUCTION, THEIR SEALED ENVELOPE PRICE BID ALONG WITH APPLICABLE LOADING, IF ANY, SHALL BE CONSIDERED FOR RANKING.

(K) BEING AN OPEN TENDER VENDORS HAVE TO SUBMIT THE DULY FILLLED AND SIGNED & STAMP COPY OF PQR ALONG WITH ALL RELATED DOCUMENTS.

(L) VENDORS HAVE TO SUBMIT THE DULY FILLLED AND SIGNED & STAMP COPY OF INTEGRITY PACT ATTACHED WITH THE ENQUIRY.

(M) THE FRAMEWORK AGREEMENT (FA) FOR THIS CASE IS FOR SUPPLY OF "GCI CASTING (FINISH MACHINED) . UNDER THIS FA, BHEL HAS NO FIRM COMMITMENT (VALUE / QUANITY) FOR PLACEMENT OF ANY PO. . PERFOMANCE SECURITY SHALL NOT BE APPLICABLE WHERE PO VALUE IS LESS THAN Rs.2 CRORES. HOWEVER, IN CASE OF PO VALUE MORE THAN Rs.02 CRORES, PERFORMANCE SECURITY SHALL BE APPLICABLE AND SHALL BE EQUAL TO 05% OF PO VALUE ORDERED AGAINST UNDER THIS RATE CONTACT(FA). VALIDITY OF PERFORMANCE SECURITY SHALL BE 30 MONTH FROM THE DATE OF CONFIRMED PURCHASE ORDER AGAINST RATE CONTACT(FA).

(M) ALL OTHER TERMS AND CONDITIONS SHALL BE AS PER ATTACHED GTC.

PQR for Crirical Regular Direct Mil items

PQR Ref No: PQR/24-25/ Crirical Regular Direct Mil items	**Date: 23.08.2024**
Rev No: 00	**Review Date: 23.08.2024**
PQR Revision Date:	

Sl. No.	BHEL Terms	Supplier's ComplianceYES/NO
1	**Offers are accepted from:**	
1.a	Only Manufacturer's Offers shall be considered for the Tender Enquiry.	
2	**Supplier shall give list of In-House Facilities:**	
2.a	Vendor shall have in-House necessary Manufacturing facilities required for manufacturing and supply of item/s as per drawing/specification.	
2.b	BHEL reserves right to visit the Works of the Manufacturer for Physical verification of the Manufacturing facilities (as declared by them) and assessment of their Quality systems during Technical Evaluation of the Offers.	
2.c	Bidders shall submit detailed Manufacturing process Plan along with the Technical Offer.	
3	**Experience:**	
3.a	Bidders shall submit the necessary documents proving their Experience in Supplying same or similar items to any Power Plant equipment Manufacturer (worldwide or within India) in last three years from the date of Enquiry. Documentary evidances to be submitted in the form of Customer's Purchase Order copies / Material Acceptance Report and item drawings/specifications. Documentary evidences submitted shall strictly meet all the technical requirement of the NIT.	
3.b	BHEL reserves right to verify the details from the Bidder's customers based on Documents submitted as a part of past experience. BHEL may ask for other relevant documents in line with above to review the capacity and capability of vendor with respect to enquired items.	
4	**Financial Capability:**	
4.a	**Turn Over:-** Turn over of Non-MSe vendors should be 332 LACS of tender value. Relaxation for MSe vendors/ Notified Start-Ups on turn over will be as per MSME guidelines. UDYAM Certificate required for Mse status.	
4.b	Applicable only for Non-Mse vendors: Audited balance Sheet and Profit and Loss account Statement of last three consecutive year (with UDIN) required along with part-1 bid. Or A CA Certified Consolidated summary (with UDIN) for last 3 consecutive years having annual turn over and Profit and Loss to be enclosed along with Part-1 bid . For Vendors having Turn over less than 1 crore in any of the financial year, CA certified Financial Turn over and Profit Loss (with UDIN) may be accepted for that year only.	

Note-1: Non Submission of the above requested documents/non compliance to the above points will result in rejection of the Offers without further Notice/Intimation to the Bidder and no correspondance will be entertained at later date.

Note-2: "Similar items" means items having same/similar manufacturing process,similar nature of use of item as that of enquired items etc.

ANNEXURE--RC-LOT-BA17

S.No	MaterialCode	Description	Qty(Nos)	LOT
1	RV1970100257	STAR WHEEL (HY-4.06) - FULLY M/CD GCI CASTING AS PER DRG. 46137600096/03 WITH MATL AS PER SPECN. AA19702/06	100	55
2	RV1970100591	MILL SIDE INSP. DOOR (HY-209.01) FULLY M/CD GCI CASTING AS PER DRG. 36127600042/06 WITH MATL AS PER SPECN. AA19702/06	18	18
3	RV1970101091	T.S.END CAP - FE (HY-903.03) - FULLY M/CD GCI CASTING AS PER DRG. 16108801034/03 WITH MATL. AS PER SPECN. AA19702/06	30	15
4	RV1970101105	TS END CAP -TE (HY-903.10) - FULLY M/CD GCI CASTING AS PER DRG. 16108801035/03 WITH MATL. AS PER SPECN. AA19702/06	26	15
5	RV1970101245	M.S.B.LINER SET (HY-019.C) - FULLY M/CD CASTINGS AS PER DRG. HY-019.C WITH MATL AS PER SPECN. AA19702/06	30	10
6	RV1970200014	LOWER BRG & PUMP HSG (HY-23.0) - FULLY M/CD GCI CASTING AS PER DRG. NO. 16117600083/04 WITH MATL AS PER SPECN. AA19703/06	35	15
7	RV1970200081	UPPER JOURNAL HOUSING (HY-36.0) - FULLY M/CD GCI CASTING AS PER DRG. 26137690004/08 WITH MATL AS PER SPECN. AA19703/06	250	50
8	RV1970200170	UPPER JOURNAL HSG.(HY-65.0) - FULLY M/CD GCI CASTING AS PER DRG. 36036000109/07 WITH MATL AS PER SPECN. AA19703/06	45	20
9	RV1970200197	OIL COLLECTOR (HY-74.0) - FULLY M/CD OIL COLLECTOR AS PER DRG. 36117600012/05 WITH MATL AS PER SPECN. AA19703/06	15	15
10	RV1970200227	TRUNNION SHAFT END CAP (FE) (HY-93.00) - FULLY M/CD GCI CASTING AS PER DRG. 16137600019/04 WITH MATL AS PER SPECN. AA19703/06	108	25
11	RV1970200251	THRUST BEARING HOUSING (HY-148.0) - FULLY M/CD GCI CASTING AS PER DRG. 36117600005/08 WITH MATL AS PER SPECN. AA19703/06	28	20
12	RV1970200303	LOWER BRG.& PUMP HOUSING COVER (HY-150.00) - FULLY M/CD GCI CASTING AS PER DRG. 26117600001/09 WITH MATL AS PER SPECN. AA19703/06	15	15
13	RV1970200324	UPPER BRG.HSG.(HY-158.0) - FULLY M/CD GCI CASTING AS PER DRG. 36117600023/03 WITH MATL AS PER SPECN. AA19703/06	15	15
14	RV1970200340	RADIAL BRG.HSG. (HY-168.0) - FULLY M/CD GCI CASTING AS PER DRG. 26117600006/09 WITH MATL AS PER SPECN. AA19703/06	30	15
15	RV1970200430*	UPPER BRG. HSG. - TIGHT FIT (HY-158.A) - FULLY M/CD GCI CASTING AS PER DRG. 26118090077/05 WITH MATL AS PER SPECN. AA19703/06	20	10

16	RV1970200456	TRAMP IRON SPOUT BODY (HY-182.01) FULLY M/CD GCI CASTING AS PER DRG. 16157600029/03 WITH MATL AS PER SPECN. AA19703/06	11	10
17	RV1970200464	TRAMP SPOUT ADAPTOR (HY-182.02) - FULLY M/CD GCI CASTING AS PER DRG. 26157600057/03 WITH MATL AS PER SPECN. AA19703/06	10	10
18	RV1970200599	SEP.ACCESS DOOR (HY-171.C.10) - FULLY M/CD GCI CASTING AS PER DRG. 36137600060/05 WITH MATL AS PER SPECN. AA19703/06	40	20
19	RV1970200715	TRANISITION PIECE (TY-342.00) FULLY M/CD ITEM AS PER DRG 24720000123/02 WITH MATL AS PER SPECN. AA19703/06	16	10
20	RV1970200839	TRAMP IRON SPOUT BODY (HY-350.01) - FULLY M/CD GCI CASTING AS PER DRG. 26110000566/05 WITH MATL AS PER SPECN. AA19703/06	96	25
21	RV1970200906	T.S.END CAP-TE 'VAR-01' (HY-313.04) - FULLY M/CD GCI CASTING AS PER DRG. 16100000257/05 WITH MATL AS PER SPECN. AA19703/06	20	12
22	RV1970200914	T.S.END CAP-FE 'VAR-01' (HY-313.05) - FULLY M/CD GCI CASTING AS PER DRG. 16100000256/06 WITH MATL AS PER SPECN. AA19703/06	20	12
23	RV1970200922	T.S.END CAP-TE 'VAR-02' (HY-313.04.A) - FULLY M/CD GCI CASTING AS PER DRG. 16100000257/05 WITH MATL AS PER SPECN. AA19703/06 (WITH METRIC THREAD)	76	25
24	RV1970200973	T.S. END CAP - THRUST END (HY-1102.03) - FULLY M/CD GCI CASTING AS AS PER DRG. 16100401191/02 WITH MATL AS PER SPECN. AA19703/06	21	10
25	RV1970200981	FULLY MACHINED T.S.END CAP -FREE END (HY-1102.10) AS AS PER DRG. 16100401192/01 WITH MATL. AS PER SPECN. AA19703/06	25	15
26	RV1970200990*	FULLY MACHINED TRUNION BUSHING RETAINER (HY-1102.09) AS AS PER DRG. 36100402324/01 WITH MATL AS PER SPECN. AA19703/06	60	20
27	RV1970205130*	UPPER SKIRT ASSY (HY-24.0) - FULLY M/CD & ASSEMBLED GCI CASTING AS PER DRG. 26117600022/05 WITH MATL AS PER SPECN. AA19703/06	25	10
			1185	

On Bidder's office letter pad

Make in India (Model Certificate) Annexure-I

Self-Declaration

Enquiry No.	
Enquiry Date	

In line with Government public procurement order Number P-45021/2/2017-B.E-II dated 15.06.2017, and further modified order dt. 28.05.2018, 29.05-2019 and 04.06.2020

I / We hereby declare that I / We are a "Local Supplier" meeting the requirement of minimum local content (…….%) defined in the above government notification for the goods against above mentioned enquiry Number.

Details of location at which local value addition will be made is as follows:

Door No.	
Street / Address 1	
Street / Address 2	
District	
State	
Country	
PIN Code	

We also understand that the false declarations will be considered as breach of Integrity and liable for action.

For Company Name:
Seal:
Signature:

Date:
Place:

(Please fill all the yellow color field)

GENERAL COMMERCIAL TERMS & CONDITIONS OF ENQUIRY
(FOR INDIAN VENDORS)

Amendment- 25
ANNEXURE-A

ITEM DESCRIPTION:
ENQUIRY NO:

Sl No	BHEL STANDARD TERMS &CONDITIONS	Confirmation of supplier (Yes/No)
1	A) OFFER MUST BE SUBMITTED IN TWO PART BID SYSTEM NAMELY TECHNO-COMMERCIAL BID & PRICE BID FOR THE ITEM AS PER ENQUIRY IN SEPARATE SEALED COVERS: (I) TECHNO – COMMERCIAL BID & (II) PRICE BID SHOULD BE CLEARLY SUPERSCRIBED THE ENQUIRY NO. AND DUE DATE ON THE ENVELOPES. (B) UN-PRICED OFFER WITH TECHNICAL BID IS REQUIRED TO BE FURNISHED BY THE VENDOR. TECHNICAL OFFER SHOULD CLEARLY REFLECT AT LEAST OUR MATERIAL CODE, ITEM DESCRIPTION & QUANTITY. (C) THE DIFFERENCE BETWEEN "UN-PRICED OFFER" AND "PRICED OFFER" SHOULD BE ONLY THE PRICES WHEREVER APPLICABLE. THE RATES AND AMOUNT SHOULD BE CLEARLY WRITTEN IN FIGURES AND WORDS BOTH WITHOUT ANY CUTTING / OVERWRITING. (D) **IMPORTANT POINT FOR VENDOR WHO HAVE NOT SUBMITTED THE SRF (SUPPLIER REGISTRATION FORM) SO FAR**: THE VENDORS, WHO HAVE NOT SUBMITTED THE SRF SO FAR, MUST SUBMIT THE SAME ALONG WITH PART- 1 BID. THE SRF TO BE DOWNLOADED FROM WWW.BHEL.COM OR https://herp.bhel.com .	
2	BID SHOULD BE FREE FROM CORRECTION, OVERWRITING, USING CORRECTIVE FLUID, ETC. ANY INTERLINEATION , CUTTING , ERASURE OR OVERWRITING SHALL BE VALID ONLY IF THEY ARE ATTESTED UNDER FULL SIGNATURE(S) OF PERSON(S) SIGNING THE BID ELSE BID SHALL BE LIABLE FOR REJECTION .	
3	YOUR TECHNO COMMERCIAL BID SHOULD MENTION THAT PRICE BID HAS BEEN SENT IN A SEPARATE ENVELOPE GIVING ITS REFERENCE.	
4	VENDOR TO ENSURE THAT ITEM & QUANTITY MENTIONED IN THE OFFERS ARE EXACTLY SAME AS PER ENQUIRY. IF ANY DEVIATION IS THERE PARTY MUST MENTION SPECIFIC HEREWITH OTHERWISE BHEL SHALL CONSIDER THAT ITEM & QUANTITY AS REQUIRED IN ENQUIRY.	
5	PLEASE MAKE SURE THAT THERE IS NO DISCREPANCY IN BETWEEN ACCEPTED TERMS & CONDITIONS MENTIONED IN THE CHECK LIST AND QUOTATION SUBMITTED BY VENDOR AND IF FOUND SO THEN THE TERMS & CONDITIONS WHICH ARE BENEFICIAL TO BHEL WOULD ONLY BE CONSIDERED.	
6	THE TENDER RECEIVED AFTER 14:00 HRS ON THE DUE DATE WILL NOT BE CONSIDERED.	
7	PART-I CONTAINING THE TECHNO-COMMERCIAL BID WILL BE OPENED ON THE DATE AND TIME SPECIFIED IN THE ENQUIRY, IN THE PRESENCE OF THOSE TENDERERS WHO WISH TO ATTEND. PART-II i.e., PRICE BID WILL BE OPENED ONLY OF THOSE BIDDERS WHO ARE FOUND TECHNO-COMMERCIALLY SUITABLE AFTER SCRUTINY OF THEIR PART-I OFFERS.	
8	NO REVISED OFFERS WILL BE ACCEPTED UNLESS ASKED BY BHEL AFTER OPENING OF PART-1 BID IN ANY CASE.	
9	THE RATE OF GST SHOULD BE CLEARLY MENTIONED IN THE OFFER.	
10	VALIDITY OF OFFER SHOULD BE MINIMUM 90 DAYS FROM THE DATE OF TECHNO - COMMERCIAL BID OPENING OR 60 DAYS FROM THE REVERSE AUCTION DATE.	
11	BHEL RESERVES THE RIGHT TO REJECT THE OFFER, WHICH IS HAVING DEVIATIONS TO THE TERMS AND CONDITIONS GIVEN IN THE TENDER ENQUIRY.	
12	**PRICING TERMS**: PRICES ONCE QUOTED SHALL REMAIN FIRM WITHIN THE VALIDITY OR ANY EXTENSION THEREOF FOR PLACEMENT OF ORDER, TILL COMPLETE EXECUTION OF THE ORDER, WITHOUT ANY ESCALATION/INCREASE FOR ANY REASON, WHATSOEVER, UNLESS SPECIFICALLY PROVIDED FOR IN THE ENQUIRY & PO. IN CASE OF FOREIGN VENDORS, THE QUOTED PRICE SHALL BE TAKEN AS INCLUSIVE OF THIRD PARTY INSPECTION AND TESTING CHARGES AS CALLED FOR IN THE NIT.	
13	**BID EVALUATION:** UNLESS SPECIFIED IN THE TENDER, VENDOR MUST NOTE THAT BHEL WILL ARRIVE THE L1 STATUS FOR EACH ITEM ON LANDED COST BASIS. ACCORDINGLY, ORDER SHALL BE PLACED ON LOWEST BIDDER ON INDIVIDUAL ITEM BASIS ONLY, UNLESS BHEL ASK FOR TERMS OTHER THAN THIS ON EXCEPTION BASIS. IN THE COURSE OF EVALUATION, IF MORE THAN ONE BIDDER HAPPENS TO OCCUPY L-1 STATUS, EFFECTIVE L-1 WILL BE DECIDED BY SOLICITING DISCOUNTS FROM THE RESPECTIVE L-1 BIDDERS. IN CASE MORE THAN ONE BIDDERS HAPPENS TO OCCUPY THE L-1 STATUS EVEN AFTER SOLICITING DISCOUNST, THE L-1 BIDDER SHALL BE DECIDED BY A TOSS/DRAW OF LOTS, IN THE PRESENCE OF THE RESPECTIVE BIDDER(S) OR THEIR REPRESENTATIVE(S). RANKING WILL BE DONE ACCORDINGLY. BHEL'S DECISION IN SUCH SITUATION SHALL BE FINAL AND BINDING.	
14	**TERMS OF DELIVERY:** **I. FOR INDIGENOUS SUPPLIERS**: THE TERMS OF DELIVERY SHOULD BE QUOTED ON F.O.R. DESTINATION (BHEL HERP STORES VARANASI) BASIS ONLY (i.e. FREIGHT & INSURANCE ON VENDOR'S ACCOUNT ONLY). IF ANY BIDDER STILL QUOTES OTHER DELIVERY TERM IN PLACE OF BHEL HERP STORES, THEIR OFFER MAY NOT BE CONSIDERED FOR FURTHER PROCESSING. IT MUST BE SPECIFICALLY NOTED.	
15	IF ANY INDIAN SUPPLIERS ARRANGE SUPPLY FROM FOREIGN PRINCIPLES/WORKS, TERMS OF DELIVERY SHOULD BE QUOTED ON CIF JNPT MUMBAI (INDIA) SEA PORT BASIS ONLY (i.e. FREIGHT & INSURANCE ON VENDOR'S ACCOUNT UPTO JNPT MUMBAI (INDIA) SEA PORT) OR CFR MUMBAI AIRPORT. HOWEVER FREIGHT CHARGES AS PER BHEL TRANSPORT CONTRACT FROM JNPT MUMBAI SEAPORT/MUMBAI AIRPORT TO BHEL VARANASI FOR EACH ITEM WILL BE LOADED AT THE TIME OF TOTAL LANDED COST CALCULATION.	
16	INSURANCE CHARGES SHALL BE TO VENDOR'S ACCOUNT ONLY IF PRICE QUOTED ON BHEL HERP STORES BASIS. IN CASE PRICE QUOTED IS ON CIF JNPT MUMBAI BASIS/ CFR MUMBAI AIRPORT BASIS, INSURANCE UP TO CIF JNPT MUMBAI/ MUMBAI AIRPORT SHALL BE IN VENDOR ACCOUNT.	
17	**PAYMENT TERMS:** **I.FOR MSEs VENDORS:** 100% AGAINST SRV WITHIN 45 DAYS THROUGH EFT (ELECTRONIC FUND TRANSFER) FROM THE DATE OF RECEIPT OF MATERIAL (DATE OF SRV) AT BHEL HERP VARANASI STORES AS PER PO. II.**FOR MEDIUM ENTERPRISES VENDORS**: 100% AGAINST SRV WITHIN 60 DAYS THROUGH EFT (ELECTRONIC FUND TRANSFER) FROM THE DATE OF RECEIPT OF MATERIAL (DATE OF SRV) AT BHEL HERP VARANASI STORES AS PER PO. **III. FOR NON- MSME:** 100% AGAINST SRV WITHIN 90 DAYS THROUGH EFT (ELECTRONIC FUND TRANSFER) FROM THE DATE OF RECEIPT OF MATERIAL (DATE OF SRV) AT BHEL HERP VARANASI STORES AS PER PO. **IV.BHEL HERP WILL MAKE PAYMENTS IN TWO PARTS: -** **PART-I:** BASIC INVOICE VALUE AND ALL OTHER CHARGES (EXCEPT GST AMOUNT) WILL BE PAID AS PER P.O. PAYMENT TERMS. **PART-II**: GST PORTION OF INVOICE VALUE WILL BE PAID ONLY AFTER FULFILLING FOLLOWING CONDITIONS: **(A)** PAYMENT OF GST AMOUNT INTO GOVT. ACCOUNT BY SUPPLIER AGAINST INVOICE RAISED TO BHEL. **(B)** FILING OF GST RETURN **(C)** DISPLAY OF GST CREDIT AGAINST BHEL GSTIN NO.09AAACB4146P2ZC IN GSTR-2B ON GSTN PORTAL. Note: 1. PAYMENT WILL BE MADE AFTER ACCEPTANCE OF MATERIAL. 2. ADVANCE PAYMENT IS NOT ACCEPTABLE BY BHEL HERP VARANASI IN ANY CASE. 3. IF ANY SUPPLIER FALLS UNDER "NON MSE" OR "NON MEDIUM" CATEGORY, THEIR PAYMENT TERM WILL BE CONSIDERED AS NON MSME SUPPLIER PAYMENT WITHOUT ANY INTIMATION.	
18	**LOADING OF PAYMENT TERM:** IN CASE OF DEVIATION, LOADING OF INTEREST RATE @SBI MCLR RATE + 6% (AS ON PART-1 OPENING DATE) SHALL BE LOADED WHILE ARRIVING AT LANDED COST TO BHEL.	
19	**LIQUIDATED DAMAGES/ LATE DELIVERY (LD) PENALTY CLAUSE:** SUBJECT TO FORCE MAJEURE CONDITIONS, FAILURE TO SUPPLY WITHIN PURCHASE ORDER DELIVERY SCHEDULE WILL MAKE THE SUPPLIER LIABLE TO AN UNCONDITIONAL PENALTY OF 0.5 % PER WEEK OR PART THEREOF SUBJECT TO THE MAXIMUM OF 10% OF THE UNDELIVERED PURCHASE ORDER VALUE EXCLUDING TAXES & DUTIES. NO GRACE PERIOD SHALL BE GIVEN.	
20	**LOADING OF LIQUIDATED DAMAGES (LD):** DEVIATION TO ABOVE STANDARD PENALTY CLAUSE, MAXIMUM LOADING OF 10% (IN CASE OF NON ACCEPTANCE OF LD CLAUSE) OR PART THEREOF (IN CASE OF PART ACCEPTANCE OF LD) SHALL BE LOADED WHILE ARRIVING LANDED COST TO BHEL. **LOADING OF DELIVERY TERM:** FURTHER IF DEVIATION IS FOUND IN THE ACCEPTED DELIVERY TERM AS WELL AS ACCEPTED PENALTY TERM, SUITABLE LOADING BASED ON TRANSPORTATION TIME TO BE TAKEN SHALL BE LOADED WHILE ARRIVING LANDED COST TO BHEL HERP STORES WHICH MAY BE AS BELOW: (i) 1% OF THE BASIC COST FOR INDIAN SUPPLIERS,	

21	**DELIVERY PERIOD:** VENDOR SHOULD STRICTLY QUOTE THE DELIVERY PERIOD AS MENTIONED IN NIT.	
22	IF ANY VENDOR DOES NOT SUPPLY THE ITEM WITHIN THE PURCHASE ORDER DELIVERY PERIOD, BHEL MAY/MAY NOT ACCEPT THE SUPPLY AT ITS SOLE DISCRETION.	
23	**BANK GUARANTEE:** THE COST OF BHEL FREE ISSUE MATERIALS PER SET/PER ASSEMBLY AND TOTAL COST OF FIM FOR THE ENQUIRY ARE MENTIONED IN NIT. IN THIS REGARD: 1 (a). PARTY WILL HAVE TO SUBMIT EQUAL AMOUNT OF SECURITY DEPOSIT **(IN THE FORM OF 10% BG/FDR/DD/CHEQUE/BANK TRANSFER AND 90% INDEMNITY BOND)** TOWARDS THE COST OF BHEL MATERIALS TO BE ISSUED TO THEM BEFORE THE ISSUE OF BHEL MATERIALS TO THEM. AT ANY POINT OF TIME, PROPORTIONATE SECURITY DEPOSIT OF TOTAL/CUMMULATIVE MATERIAL VALUE SHOULD BE MAINTENED. (b) **IN CASE OF TRIAL/DEVELOPMENTAL ORDER, PARTY WILL HAVE TO SUBMIT 30% BG/FDR/DD/CHEQUE/BANK TRANSFER AND 70% INDEMNITY BOND TOWARDS THE COST OF BHEL FIM**. 2. BHEL MAY ASK THE SUPPLIER FOR SUBMISSION OF FULL SECURITY DEPOSIT AMOUNT OR PART DEPENDING UPON THE AVAILABILITY OF FREE ISSUE MATERAILS AT OUR END. 3. PARTY MUST HAVE TO SUBMIT THE SAME WITHIN 02 WEEK TIME FROM THE DATE OF WRITTEN INTIMATION BY BHEL WITHOUT FAIL OTHERWISE IT WOULD TREATED AS FAILURE OF HONOURING PO TERMS AND ACCORDINGLY BHEL MAY CANCEL THE PURCHASE ORDER AND INITIATE ALTERNATE PROCUREMENT ACTION AT SUPPLIER RISK & COST. 4. IN CASE OF ABSENCE OF DESIRED SECURITY DEPOSIT AT BHEL END AND ALSO NON RESPONSE OF POINT NO. 03 AS ABOVE, I. BHEL MAY HOLD THE PENDING PAYMENTS OF SUPPLIER AVAILABLE AT BHEL **ON THEIR CONSENT.** II. IF NO PAYMENT IS PENDING AT BHEL END, ACTION FOR ALTERNATE PROCUREMENT ACTION MAY BE INITIATED. **5. THE FORMAT OF BG AND IB SHALL BE PER ATTACHED ANNEXURE-BG/FIM AND IB-FIM RESPECTIVELY**.	
24	TRANSPORTATION CHARGES FOR SENDING BHEL FREE ISSUE MATERIALS (FIM) TO THE PARTY WORKS WILL BE BORNE BY BHEL ONLY. THE FREIGHT CHARGES FOR SENDING THE BHEL FIM FROM HERP STORES TO PARTY'S WORK FOR EACH ITEM WILL BE LOADED AS PER BHEL TRANSPORT CONTRACT AT THE TIME OF TOTAL LANDED COST CALCULATION. HOWEVER, VARANASI/LOCAL BASED VENDORS WILL LIFT THE FIM FROM BHEL STORES AND BORNE ITS TRANSPORTATION CHARGES.	
25	IF BHEL ISSUES FREE ISSUE MATERIALS TO THE SUPPLIER, IT MUST BE RETURNED WITHIN THE TIME LIMIT AS PRESCRIBED IN GST LAW (PRESENTLY 01 (ONE) YEAR FROM THE DATE OF FREE ISSUE DATE) TO COMPLY THE GST RULES. IF ANY VENDOR DOES NOT RETURN THE BHEL FREE ISSUE MATERIALS AS MENTIONED ABOVE, THE FINANCIAL IMPLICATION ON ACCOUNT OF THIS, IF ANY, SHALL BE RECOVERED FROM THE PARTY BILLS.	
26	**REVERSE AUCTION**: BHEL SHALL BE RESORTING TO REVERSE AUCTION (RA) (GUIDELINES AS AVAILABLE ON WWW.BHEL.COM) FOR THIS TENDER. RA SHALL BE CONDUCTED AMONG ALL THE TECHNO-COMMERCIALLY QUALIFIED BIDDERS. PRICE BIDS OF ALL TECHNO-COMMERCIALLY QUALIFIED BIDDERS SHALL BE OPENED AND SAME SHALL BE CONSIDERED AS INITIAL BIDS OF BIDDERS IN RA. IN CASE ANY BIDDER(S) DO (ES) NOT PARTICIPATE IN ONLINE REVERSE AUCTION, THEIR SEALED ENVELOPE PRICE BID ALONG WITH APPLICABLE LOADING, IF ANY, SHALL BE CONSIDERED FOR RANKING.	
27	IF ANY OF THE VENDORS DO NOT ACCEPT THE ABOVE POINT MENTIONED AT SL. NO. 26, THEIR OFFER MAY BE LIABLE FOR REJECTION WITHOUT INTIMATION.	
28	**RISK PURCHASE**: IN CASE OF DELAY IN SUPPLIES/ DEFECTIVE SUPPLIES/NON EXECUTION OF PURCHASE ORDER ETC. (FOR DETAILS, REFER GUIDELINES FOR RISK PURCHASE), BHEL MAY CANCEL THE ORDER IN FULL OR PART THEREOF/ MAY ALSO MAKE THE PURCHASE OF SUCH MATERIALS FROM ELSEWHERE/ALTERNATIVE SOURCES AT THE RISK & COST OF SUPPLIER.BHEL MAY ALSO MANUFACTURE THE ITEM IN-HOUSE IN PART OR FULL DEPENDING UPON THE URGENCY OF THE ITEM. GUIDELINES FOR **RISK PURCHASE** IS AVAILABLE ON BHEL WEBSITE "https://herp.bhel.com" at "Notice". RESPECTIVE BIDDERS / SUPPLIERS MAY REFER THIS GUIDELINE BEFORE SUBMITTING THEIR OFFER AGAINST BHEL, HERP TENDER ENQUIRIES. IN CASE RISK PURCHASE IS APPLIED, BHEL SHALL TAKE ACTION AGAINST THE NON-PERFORMING AND/OR DEFAULTING SUPPLIERS/ CONTRACTORS IN LINE WITH THIS GUIDELINE ONLY.	
29	BHEL MAY SHORT CLOSE/CANCEL AN ORDER AT ANY TIME DURING THE CURRENCY OF THE CONTRACT/PO IRRESPECTIVE OF THE PO DELIVERY DATE, IF (I) THE WORK PROGRESS OF THE VENDOR IS POOR, OR (II) THE DELIVERY REQUIREMENT OF THE ITEM IS VERY CRITICAL & NOT BEING MET BY THE VENDOR ON WHICH ORDER HAS BEEN PLACED, OR (III) THERE IS NO RESPONSE FOR IMPROVEMENT IN DELIVERY AS PER BHEL REQUIREMENT,	
30	THE OFFERS OF THE BIDDERS WHO ARE ON THE BANNED LIST AND ALSO THE OFFER OF THE BIDDERS, WHO ENGAGE THE SERVICES OF THE BANNED FIRMS, SHALL BE REJECTED. THE LIST OF BANNED FIRMS IS AVAILABLE ON BHEL WEB SITE www.bhel.com	
31	**RESERVATION RIGHTS OF BHEL**: – BHEL RESERVES THE RIGHT TO REJECT ANY OR ALL QUOTATIONS WITHOUT ASSIGNING ANY REASONS THEREOF. BHEL ALSO RESERVES THE RIGHT TO INCREASE OR DECREASE THE TENDERED QUANTITIES. VENDORS SHOULD BE PREPARED TO ACCEPT ORDER FOR REDUCED QUANTITIES WITHOUT ANY EXTRA CHARGES. VENDOR SHOULD ALSO BE PREPARED FOR GIVING DISCOUNT IN CASE OF INCREASE IN QUANTITY.	
32	**NON-DISCLOSURE AGREEMENT**: ALL DRAWINGS AND STANDARDS ARE PROPRIETARY OF BHEL. IT MUST NOT BE USED IN ANY WAY DETRIMENTAL TO THE INTEREST OF THE COMPANY. ALL SUPPLIERS SHALL FURNISH NDAS (NON-DISCLOSURE AGREEMENT) AGAINST USE OF DOCUMENTS FURNISHED BY BHEL TOWARDS UN-AUTHORIZED USE EXCEPT FOR THE PURPOSE IT HAS BEEN FURNISHED.	
33	**A. SETTLEMENT OF DISPUTES & ARBITRATION:** I.ALL QUESTIONS/INTERPRETATIONS REGARDING SUBJECT MATTER OF THE CONTRACT SHALL BE DECIDED BY THE BHEL ON THE REQUEST OF THE VENDOR AND THE DECISION OF THE BHEL SHALL BE FINAL. II.IN CASE OF DISPUTE, STEPS SHALL BE TAKEN BY THE PARTIES TO THE CONTRACT TO SETTLE THE SAME THROUGH NEGOTIATIONS. III.IN CASE, DISPUTE IS NOT SETTLED IN NEGOTIATIONS, IT SHALL BE REFERRED TO CONCILIATOR APPOINTED BY THE COMPETENT AUTHORITY OF THE BHEL. *THE CONCILIATION PROCEEDINGS WITH RESPECT TO A DISPUTE AS DEFINED IN THE BHEL CONCILIATION SCHEME, 2018 AND SUBSEQUENT REVISIONS CAN BE INITIATED UNDER THE SCHEME AT ANY STAGE WHETHER BEFORE, DURING OR EVEN AFTER THE COMMENCEMENT OF ARBITRATION PROCEEDINGS OR LITIGATION BEFORE COURTS. THIS CONCILLIATION SCHEME IS AVAILABLE ON OUR WEBSITES* https://herp.bhel.com *AND* ***www.bhel.com*** . IV.IN CASE DISPUTE IS NOT SETTLED IN CONCILIATION PROCEEDINGS, THE SAME SHALL BE REFERRED TO ARBITRATION AS PER CORPORATE GUIDELINES OF THE BHEL AND THE ARBITRATION PROCEEDING SHALL BE CONDUCTED AS PER PROVISIONS OF THE ARBITRATION AND CONCILIATION ACT, 1996 READ WITH CORPORATE GUIDELINE AS AMENDED FROM TIME TO TIME. V.THE VENDOR SHALL CONTINUE TO PERFORM THE CONTRACT, PENDING SETTLEMENT OF DISPUTE(S). **B.JURISDICTION:** ALL DISPUTES OR DIFFERENCES ARISING OUT OF OR IN CONNECTIONS WITH THE CONTRACT SHALL BE SUBJECT TO THE EXCLUSIVE JURISDICTION OF THE COURT AT VARANASI (U.P.) ONLY.	
34	**SPECIAL NOTE FOR BIDDERS**: THE QUOTATION SHOULD BE FROM PRINCIPAL / ORIGINAL EQUIPMENT MANUFACTURER ONLY. THE OFFER OF THOSE OEM, AUTHORISING THEIR TRADER / DEALER / DISTRIBUTOR TO QUOTE AND TAKE ORDER IS LIABLE FOR DISQUALIFICATION. SINCE BHEL PREFER TO DEAL DIRECTLY WITH OEM AND NOT THROUGH DEALER / TRADER / DISTRIBUTOR OF OEM, THEREFORE, OEM MUST DIRECTLY QUOTE, TAKE ORDER AND DELIVER THE MATERIAL UNDER THEIR GUARANTEE / WARRANTEE.	
35	I. FOLLOWING DOCUMENTS SHOULD BE ENCLOSED AND ADDRESSED TO DGM (FINANCE) AND SAME SHALL BE DISPATCHED TO MM DEPTT. BHEL, HERP, TARNA, SHIVPUR, VARANASI-221003 FOR PAYMENT PURPOSE: a) 05 (FIVE) COPIES OF GST INVOICES b) COPY OF GR/RR. c) TEST CERTIFICATE AND GUARANTEE/WARRANTEE CERTIFICATE AND PDI REPORT, IF APPLICABLE. (ONE COPY). II. FURTHER TO ABOVE, 02 (TWO) COMPLETE SETS OF DOCUMENTS (COPIES OF ABOVE MENTIONED DOCUMENTS AT SL. NO. I FOR INDIAN SUPPLIERS (UNDER THIS CLAUSE) SHALL BE SENT FOR PURCHASE AND QUALITY DEPARTMENTS. ORIGINAL COPIES OF TC, GC, PDI REPORTS & OTHER QUALITY PAPERS SHALL BE ATTACHED IN THE SET OF DOCUMENTS FOR QUALITY DEPARTMENTS. III. THE VENDOR SHOULD PROVIDE BILLS & OTHER DOCUMENTS COMPLETE IN ALL RESPECT AS PER PURCHASE ORDER ALONGWITH DESPATCH OF MATERIALS**.** BHEL SHALL SEEK CLARIFICATION(S) (IF ANY) RELATED TO PAYMENT DOCUMENTS IN ONE GO. THE VENDOR SHOULD PROVIDE ALL SUCH CLARIFICATION(S) IMMEDIETLY.ANY DELAY IN PROCESSING OF PAYMENT, DUE TO NON RECEIPT OF CLARIFICATION(S) SOUGHT BY BHEL, SHALL BE ATTRIBUTABLE COMPLETELY TO VENDOR. IV. DIGITALLY SIGNED INVOICE IS ALSO ACCEPTABLE FOR PROCESSING OF PAYMENT.	

36	THE VENDOR SHALL ENSURE THAT THEIR BANK DETAILS ARE UPDATED WITH US FOR TIMELY PAYMENT THROUGH EFT (ELECTRONICS FUND TRANSFER).	
37	**GUIDELINES FOR SUSPENSION OF BUSINESS DEALINGS WITH SUPPLIERS/ CONTRACTORS:** THE REVISED GUIDELINES FOR SUSPENSION OF BUSSINESS DEALINGS ARE AVAILABLE ON BHEL WEBSITE AT "www.bhel.com" on "SUPPLIER REGISTRATION PAGE". RESPECTIVE BIDDERS / SUPPLIERS MAY REFER THIS BEFORE QUOTING AS PER THEIR REQUIREMENT. ACTION AGAINST THE DEFAULTED SUPPLIERS/ CONTRACTORS' SHALL BE TAKEN AS PER THESE GUIDELINES ONLY.	
38	VENDOR MUST FOLLOW THE SEQUENTIAL DELIVERY SCHEDULE i.e. ITEMS TO BE SUPPLIED IN SUCH A MANNER THAT THE PURCHASE ORDER HAVING OLDER DELIVERY SCHEDULE SHOULD BE SUPPLIED EARLIER AND PURCHASE ORDER HAVING LATTER DELIVERY SCHEDULE TO BE SUPPLIED LATTER. IF ANY VENDOR DOES NOT FOLLOW THE SEQUENTIAL DELIVERY SCHEDULE ESPECIALLY FOR SAME ITEM, BHEL MAY ACCOUNT FOR THE ITEM IN SEQUENTIAL MANNER OR MAY RECOVER THE FINANCIAL IMPLICATION.	
39	ALL ABOVE ACCEPTED TERMS & CONDITIONS SHALL BE PART OF PURCHASE ORDER WITH OR WITHOUT MENTIONING IN THE PO/CONTRACT BASED ON YOUR ACCEPTANCE AND OFFER SUBMITTED.	
40	**IMPORTANT INSTRUCTION:** I.VENDORS ARE REQUESTED TO QUOTE THEIR RATE WITH DESCRIPTION MENTIONED IN THE ENQUIRY CONSIDERING ALL TECHNICAL TERMS & CONDITIONS OF THE ENQUIRY. ALSO RATES QUOTED SHOULD BE EXACLTY AS PER SL. NO. OF HARD COPY OF THE ENQUIRY (IF ENQUIRY HAS BEEN FLOATED THROUGH CONVENTIONAL MODE) OR AS PER SL. NO. APPEARING IN THE e-Procurement PORTAL (IF ENQUIRY HAS BEEN FLOATED THROUGH e-Procurement) ONLY. IT MUST BE FOLLOWED UP TO AVOID CONFUSION AT LATER STAGES. ALSO RATES TO BE SUBMITTED BOTH IN NUMERICS AS WELL AS IN WORD. IN CASE OF DISCREPENCY, RATES SUBMITTED IN WORDS SHALL BE CONSIDERED FOR FURTHER PROCESSING. II.DOCUMENTS SUBMITTED WITH THE OFFER SHOULD BE SIGNED AND STAMPED IN EACH PAGE BY AUTHORIZED REPRESENTATIVE OF THE BIDDER. II.IN CASE OF PDI, VENDOR SHALL RAISE ONLINE INSPECTION CALL IN ONLINE INSPECTION PORTAL/INTIMATE BHEL IN WRITTIING (WHERE INSPECTION IS IN BHEL HERP SCOPE) AT LEAST 01 WEEK IN ADVANCE OR AS MUTUALLY AGREED PERIOD ABOUT THE DATE AND PLACE AT WHICH GOODS WILL BE READY FOR INSPECTION. IV.PURCHASER OR HIS AUTHORIZED REPRESENTATIVE SHALL BE ENTITLED TO CARRY OUT SURVEILLANCE INSPECTION OF MATERIAL AND WORKMANSHIP AT SELLER'S PREMISES OR AT HIS SUB-CONTRACTOR'S PREMISES AT ALL REASONABLE TIMES DURING EXECUTION OF THE CONTRACT. SUCH INSPECTION, EXAMINATION AND TESTING, IF MADE, SHALL NOT ABSOLVE THE SELLER FROM HIS OBLIGATIONS UNDER THE CONTRACT. V.SUCH PRE-DISPATCH INSPECTION, EXAMINATION AND TESTING, IF MADE, AT VENDOR'S WORKS SHALL NOT ABSOLVE THE SELLER FROM HIS OBLIGATIONS TO MANUFACTURE/MACHINING THE GOODS UNDER THE CONTRACT. IF DEFCETS ARE FOUND AT LATER STAGE, IT IS THE SOLE RESPONSIBILITY OF THE VENDOR TO REPLACE/RECTIFY THE SAME.	
41	**IMPORTANT CLAUSE FOR GST**: INPUT TAX CREDIT OF GST CAN BE AVAILED BY BHEL ONLY WHEN THE MATERIAL HAS BEEN PHYSICALLY RECEIVED AND GST INVOICE IS IN POSSESSION OF BHEL. THEREFORE, SUPPLIERS SHOULD ENSURE THE FOLLOWING IN RESPECT OF POS ISSUED BY BHEL: I. GST INVOICE SHOULD CONTAIN ADDRESS, GST NO. AND PAN NO. OF BHEL AS WELL AS OF SUPPLIER. APPLICABLE HSN CODE OF THE MATERIAL SHOULD BE INDICATED IN THE GST INVOICE. II. FIVE COPIES OF GST INVOICE AND LORRY RECEIPT MAY BE DESPATCHED ALONGWITH SHIPMENT OF THE GOODS IN ORDER TO AVOID ANY DELAY IN AVAILING INPUT CREDIT BY BHEL. III. DECLARE SUCH INVOICE IN HIS GSTR-1 RETURN FOR THE MONTH OF DESPATCH OF MATERIAL. IV. PAYMENT OF GST TO STATUTORY AUTHORITIES WITHIN PRESCRIBED TIME. V. IN CASE OF DISCREPANCY IN THE DATA UPLOADED BY THE BIDDER IN THE GSTN PORTAL VIS-A-VIS THE TAX INVOICE OR IN CASE OF ANY SHORTAGES OR REJECTION IN THE SUPPLY, THEN BHEL WILL NOT BE ABLE TO AVAIL THE TAX CREDIT. BIDDER HAS TO RECTIFY THE DATA DISCREPANCY IN THE GSTN PORTAL OR ISSUE CREDIT NOTE OR DEBIT NOTE (DETAILS ALSO TO BE UPLOADED IN GSTN PORTAL) FOR THE SHORTAGES OR REJECTIONS IN THE SUPPLIES OR ADDITIONAL CLAIMS FOR PROCESSING OF SUCH INVOICES. VI. GST TDS DEDUCTED AS PER GST ACT, IS UPLOADED IN GSTN PORTAL ALONG GSTR7. BIDDERS CAN DIRECTLY DOWNLOAD THE GST TDS CERTIFICATE FROM THE GSTN PORTAL. IN CASE GST CREDIT IS DELAYED /DENIED TO BHEL DUE TO NON OR DELAYED RECEIPT OF GOODS AND OR TAX INVOICE OR EXPIRY OF TIMELINE PRESCRIBED IN GST LAW FOR AVAILING SUCH ITC OR ANY OTHER REASON NOT ATTRIBUTABLE TO BHEL, GST AMOUNT SHALL BE RECOVERABLE FROM VENDOR ALONG WITH INTEREST /PENALTY LEVIABLE ON BHEL. IN CASE SUPPLIERS DELAYS DECLARING SUCH INVOICE IN HIS RETURN AND GST CREDIT AVAILED BY BHEL IS DENIED OR REVERSED SUBSEQUENTLY AS PER GST LAW, GST AMOUNT PAID BY BHEL TOWARDS SUCH ITC REVERSAL SHALL BE RECOVERABLE FROM SUPPLIER ALONGWITH INTEREST LEVIED/LEVIABLE ON BHEL. IN CASE OF RAISING ANY SUPPLEMENTARY TAX INVOICE (DEBIT/ CREDIT NOTE), THE SUPPLIER SHALL ISSUE THE SAME CONTAINING ALL THE DETAILS AS REFERRED TO IN SECTION 34 READ WITH SECTION 31 OF GST ACT & RULES REFERRED THERE UNDER .	
42	**STATUTORY VARIATION CLAUSE :** ANY INCREASE IN THE RATE OF GST SHALL BE PAYABLE ONLY FOR DELIVERIES COMPLETED WITHIN THE SCHEDULED DELIVERY PERIOD, IN OTHER WORDS INCREASE IN THE RATE OF GST SHALL NOT BE PAYABLE FOR VALUE OF CONSIGNMENT DELIVERED AFTER THE SCHEDULED PURCHASE ORDER DELIVERY PERIOD.2.NEW TAXES AND DUTIES , IF IMPOSED SUBSEQUENT TO DUE DATE OF OFFER SUBMISSION, BY STATUTORY AUTHORITY DURING CONTRACT PERIOD (INCLUDING EXTENSION IF THE SAME IS NOT ATTRIBUTABLE TO BIDDER) SHALL BE REIMBURSED BY BHEL ON PRODUCTION OF RELEVANT SUPPORTING DOCUMENTS TO THE SATISFACTION OF BHEL . HOWEVER, BIDDER SHALL TAKE PRIOR APPROVAL OF BHEL BEFORE DEPOSITING NEW TAXES AND DUTIES.	
43	**IMPORTANT INSTRUCTION FOR MSEs SUPPLIERS:** I. "MSE SUPPLIERS CAN AVAIL THE INTENDED BENEFITS ONLY IF THEY SUBMIT ALONG WITH OFFER, ATTESTED COPIES OF EITHER EM-II CERTIFICATE HAVING DEEMED VALIDITY (FIVE YEARS FROM THE DATE OF ISSUE OF ACKNOWLEDGEMENT IN EM-II) OR VALID NSIC CERTIFICATE OR EM-II CERTIFICATE ALONG WITH CA CERTIFICATE (FORMAT ENCLOSED AS PER ANNEXURE-1 WHERE DEEMED VALIDITY OF EM-II CERTIFICATE OF FIVE YEARS HAS EXPIRED) APPLICABLE FOR THE RELEVANT F/Y (LATEST AUDITED).DATE TO BE RECKONED FOR DETERMINING THE DEEMED VALIDITY WILL BE THE DATE OF BID OPENING (PART -1 IN CASE OF TWO PART BID). NON SUBMISSION OF SUCH DOCUMENTS WILL LEAD TO CONSIDERATION OF THEIR BID AT PAR WITH OTHER BIDDERS. NO BENEFIT SHALL BE APPLICABLE FOR THIS ENQUIRY IF ANY DEFICIENCY IN THE ABOVE REQUIRED DOCUMENTS ARE NOT SUBMITTED BEFORE PRICE BID OPENING. IF THE TENDER IS TO BE SUBMITTED THROUGH e-procurement PORTAL, THEN THE ABOVE REQUIRED DOCUMENTS ARE TO BE UPLOADED ON THE PORTAL. DOCUMENTS SHOULD BE NOTARIZED OR ATTESTED BY A GAZETTED OFFICE. II.IN CASE OF ANY CHANGE IN THE MSE STATUS OF THE BIDDER, IT SHALL BE RESPONSIBILITY OF THE BIDDER TO NOTIFY THE CHANGE AS A PART OF THE BID DOCUMENT. IF AT A LATER DATE IT COMES TO NOTICE OF BHEL, THAT THE CHANGE IN THE STATUS HAS NOT BEEN INTIMATED BY THE BIDDER AND THE ORDER IS OBTAINED UNDER THE PREMISE OF AN MSE, THEN BHEL WOULD CANCEL THE PENDING ORDER AGAINST THIS TENDER AND TAKE NECESSARY ACTION SUSPENSION OF THE BUSSINESS DEALING WITH THE BIDDER AS PER PROCUREMENT POLICY OF BHEL. III.25 % OF THE TENDERED QUANTITY IS EARMARKED FOR MSE SUPPLIERS IN THIS TENDER. IV.OUT OF THIS 25% TENDERED QUANTITY RESERVED FOR MSE SUPPLIERS, 6.25% SHALL BE EARMARKED FOR PROCUREMENT FROM MSEs OWNED BY SC/ST ENTREPRENEURS. V.OUT OF THIS 25% TENDERED QUANTITY RESERVED FOR MSE SUPPLIERS, 3% SHALL BE EARMARKED FOR PROCUREMENT FROM MSEs OWNED BY WOMEN. VI.IN CASE MSE VENDOR PARTICIPATING IN THE TENDER QUOTES WITHIN THE PRICE BAND OF "L1+15%", THEY WILL BE ALLOWED TO SUPPLY THE 25% PORTION OF THE REQUIREMENT SUBJECT TO ACCEPTANCE OF L1 PRICE (ON LANDED COST BASIS) BY MSE VENDOR. IN CASE OF MORE THAN ONE SUCH MSE VENDOR WITHIN THE "L1+15% PRICE BAND" THE SUPPLY SHALL BE SHARED PROPORTIONATELY (TO 25% TENDERED QUANTITY). VII.IF THE L1 VENDOR HAPPENS TO BE A MSE VENDOR AGAINST ANY ITEM CODE, THEN 100% OF THE TENDERED QTY (FOR RESPECITVE ITEM CODE) SHALL BE PROPOSED TO ORDER ON THE L1 (MSE) VENDOR, EVEN THOUGH THERE MAY BE OTHER MSE VENDORS WITHIN THE "L1+15% PRICE BAND". VIII.IN CASE AFTER OPENING OF PRICE BID, IT IS SEEN THAT NO MSE HAS BECOME L1, THEN DEPENDING ON THE NATURE OF THE ITEM, IF IT IS NOT POSSIBLE TO SPLIT THE TENDERED ITEMS/QUANTITIES ON ACCOUNT OF REASONS LIKE CUSTOMER CONTRACT REQUIREMENTS OF SUPPLYING ONE MAKE FOR A GIVEN PROJECT OR TECHNICAL REASONS LIKE TENDERED ITEMS BEING A SYSTEM etc. THEN BHEL WOULD NOT COUNTER OFFER THE L1 PRICES EVEN THOUGH THERE MAY BE MSE BIDDERS WITHIN THE "L1+15% PRICE BAND" OF L1.	
44	THE **STARTUPS** AS DEFINED IN THE GAZETTE OF INDIA NOTIFICATION NO.: G.S.R. 127 (E) DATED 19/02/2019 WILL BE EXEMPTED FROM FULFILLING THE CRITERIA, IF MENTIONED, IN THE PQR (PRE-QUALIFYING REQUIREMENT) REGARDING PRIOR TURNOVER AND PRIOR EXPERIENCE. HOWEVER, THERE MAY BE CIRCUMSTANCES (LIKE PROCUREMENTS OF ITEMS RELATED TO PUBLIC SAFETY, HEALTH, CRITICAL SECURITY OPERATIONS AND EQUIPMENTS ETC.) WHERE BHEL MAY PREFER THE VENDORS TO HAVE PRIOR EXPERIENCE RATHER THAN GIVING ORDER TO NEW ENTITIES. FOR SUCH PROCUREMENTS, BHEL MAY NOT RELAX THE CRITERIA OF PRIOR EXPERIENCE/TURNOVER FOR THE STARTUPS.	
45	**PURCHASE PREFERENCE FOR INDIAN VENDORS:** FOR THIS PROCUREMENT, THE LOCAL CONTENT TO CATEGORIZE A SUPPLIER AS A CLASS I LOCAL SUPPLIER / CLASS II LOCAL SUPPLIER /NON LOCAL – SUPPLIER AND PURCHASE PREFERENCE TO CLASS I LOCAL SUPPLIER, IS AS DEFINED IN PUBLIC PROCUREMENT (PREFERNCE TO MAKE IN INDIA), ORDER	

	2017 DATED 04.06.2020 ISSUED BY DPIIT. IN CASE OF SUBSEQUENT ORDERS ISSUED BY THE NODAL MINISTRY, CHANGING THE DEFINITION OF LOCAL CONTENT FOR THE ITEMS OF THE NIT, THE SAME SHALL BE APPLICABLE EVEN IF ISSUED AFTER ISSUE OF THIS NIT, BUT BEFORE OPENING OF PART –II BIDS AGAINST THIS NIT. **MODEL CLAUSE FOR TENDER.** I. ANY BIDDER FROM A COUNTRY WHICH SHARES A LAND BORDER WITH INDIA WILL BE ELIGIBLE TO BID IN THIS TENDER ONLY IF THE BIDDER IS REGISTERED WITH THE COMPETENT AUTHORITY. II. "BIDDER" (INCLUDING THE TERM 'TENDERER', 'CONSULTANT' OR 'SERVICE PROVIDER' IN CERTAIN CONTEXTS) MEANS ANY PERSON OR FIRM OR COMPANY, INCLUDING ANY MEMBER OF A CONSORTIUM OR JOINT VENTURE (THAT IS AN ASSOCIATION OF SEVERAL PERSONS, OR FIRMS OR COMPANIES), EVERY ARTIFICIAL JURIDICAL PERSON NOT FALLING IN ANY OF THE DESCRIPTIONS OF BIDDERS STATED HEREINBEFORE, INCLUDING ANY AGENCY BRANCH OR OFFICE CONTROLLED BY SUCH PERSON, PARTICIPATING IN A PROCUREMENT PROCESS. III. "BIDDER FROM A COUNTRY WHICH SHARES A LAND BORDER WITH INDIA" FOR THE PURPOSE OF THIS ORDER MEANS: - a) AN ENTITY INCORPORATED, ESTABLISHED OR REGISTERED IN SUCH A COUNTRY: OR b) A SUBSIDIARY OF AN ENTITY INCORPORATED, ESTABLISHED OR REGISTERED IN SUCH A COUNTRY; OR c) AN ENTITY SUBSTANTIALLY CONTROLLED THROUGH ENTITIES INCORPORATED, ESTABLISHED OR REGISTERED IN SUCH A COUNTRY; OR d) AN ENTITY WHOSE BENEFICIAL OWNER IS SITUATED IN SUCH A COUNTRY; OR e) AN INDIAN (OR OTHER) AGENT OF SUCH AN ENTITY; OR f) A NATURAL PERSON WHO IS A CITIZEN OF SUCH A COUNTRY; OR g) A CONSORTIUM OR JOINT VENTURE WHERE ANY MEMBER OF THE CONSORTIUM OR JOINT VENTURE FALLS UNDER ANY OF THE ABOVE IV. THE BENEFICIAL OWNER FOR THE PURPOSE OF (III) ABOVE WILL BE AS UNDER: 1. IN CASE OF A COMPANY OR LIMITED LIABILITY PARTNERSHIP, THE BENEFICIAL OWNER IS THE NATURAL PERSON (S) WHO, WHETHER ACTING ALONE OR TOGETHER, OR THROUGH ONE OR MORE JURIDICAL PERSON, HAS A CONTROLLING OWNERSHIP INTEREST OR WHO EXERCISES CONTROL THROUGH OTHER MEANS. EXPLANATION – a. "CONTROLLING OWNERSHIP INTEREST" MEANS OWNERSHIP OF OR ENTITLEMENT TO MORE THAN TWENTY-FIVE PER CENT. OF SHARES OR CAPITAL OR PROFITS OF THE COMPANY b. "CONTROL" SHALL INCLUDE THE RIGHT TO APPOINT MAJORITY OF THE DIRECTORS OR TO CONTROL THE MANAGEMENT OR POLICY DECISIONS INCLUDING BY VIRTUE OF THEIR SHAREHOLDING OR MANAGEMENT RIGHTS OR SHAREHOLDER'S AGREEMENTS OF VOTING AGREEMENTS; 2. IN CASE OF A PARTNERSHIP FIRM, THE BENEFICIAL OWNER IS THE NATURAL PERSON (S) WHO, WHETHER ACTING ALONE OR TOGETHER, OR THROUGH ONE OR MORE JURIDICAL OF CAPITAL OR PROFITS OF THE PARTNERSHIP; 3. IN CASE OF AN UNINCORPORATED ASSOCIATION OR BODY OF INDIVIDUALS, THE BENEFICIAL OWNER IS THE NATURAL PERSON (S), WHO, WHETHER ACTING ALONE OR TOGETHER, OR THROUGH ONE OR MORE JURIDICAL PERSON, HAS OWNERSHIP OF OR ENTITLEMENT TO MORE THAN FIFTEEN PERCENT OF THE PROPERTY OF CAPITAL OF PROFITS OF SUCH ASSOCIATION OR BODY OF INDIVIDUALS; 4. WHERE NO NATURAL PERSON IS IDENTIFIED UNDER (1) OR (2) OR (3) ABOVE, THE BENEFICIAL OWNER IS THE RELEVANT NATURAL PERSON WHO HOLDS THE POSITION OF SENIOR MANAGING OFFICIAL; 5. IN CASE OF TRUST, THE IDENTIFICATION OF BENEFICIAL OWNER (S) SHALL INCLUDE IDENTIFICATION OF THE AUTHOR OF THE TRUST, THE TRUSTEE, THE BENEFICIARIES WITH FIFTEEN PERCENT OR MORE INTEREST IN THE TRUST AND ANY OTHER NATURAL PERSON EXERCISING ULTIMATE EFFECTIVE CONTROL OVER THE TRUST THROUGH A CHAIN OF CONTROL OR OWNERSHIP. V. AN AGENT IS A PERSON EMPLOYED TO DO ANY ACT FOR ANOTHER, OR TO REPRESENT ANOTHER IN DEALINGS WITH THIRD PERSON. **CERTIFICATE:** IN ORDER TO AVAIL THE BENEFITS, VENDORS TO SUBMIT (ALONG WITH OFFER) THE SELF-CERTIFICATION THAT THE ITEM OFFERED MEETS THE CONTENT REQUIREMENT FOR CLASS-I/ CLASS-II LOCAL SUPPLIER AS THE CASE MAY BE, INDICATING THE PERCENTAGE OF LOCAL CONTENT. AND SHALL GIVE DETAILS OF LOCATION AT WHICH THE LOCAL VALUE ADDITION IS MADE (refer attached Make in India (Model Certificate no I).	
46	**FORCE MAJEURE** : NOTWITHSTANDING ANYTHING CONTAINED IN THE CONTRACT, NEITHER THE VENDOR NOR THE BHEL SHALL BE HELD RESPONSIBLE FOR TOTAL OR PARTIAL NON-EXECUTION OF ANY OF THE CONTRACTUAL OBLIGATIONS, SHOULD THE OBLIGATION BECOME UNREASONABLY ONEROUS OR IMPOSSIBLE DUE TO OCCURRENCE OF A 'FORCE MAJEURE' WHICH DIRECTLY AFFECTS THE OBLIGATIONS TO BE PERFORMED BY THE BHEL OR THE VENDOR ; SUCH EVENTS INCLUDE WAR, MILITARY OPERATIONS OF ANY NATURE, BLOCKAGES, REVOLUTIONS, INSURRECTIONS, RIOTS, CIVIL COMMOTIONS, INSURGENCY, SABOTAGE, ACTS OF PUBLIC ENEMY, FIRES, EXPLOSION, EPIDEMICS, QUARANTINE RESTRICTIONS, FLOODS, EARTHQUAKE, OR ACTS OF GOD, RESTRICTIONS BY GOVT. AUTHORITIES; OVER WHICH THE VENDOR OR THE BHEL HAS NO CONTROL. THE PARTY CLAIMING TO BE AFFECTED BY FORCE MAJEURE SHALL NOTIFY THE OTHER PARTY IN WRITING WITHOUT DELAY, WITHIN TWO WEEKS ON THE INTERVENTION AND ON THE CESSATION OF SUCH CIRCUMSTANCE. EXTENSION OF TIME SOUGHT BY THE VENDOR ALONG WITH SUPPORTING EVIDENCE AND SO GRANTED BY THE BHEL FOR THE SUPPLY/ WORK AFFECTED, IF ANY, SHALL NOT BE CONSTRUED AS WAIVER IN RESPECT OF REMAINING DELIVERIES. RESCHEDULING OF DELIVERIES ON ACCOUNT OF FORCE MAJEURE CONDITIONS, IF SO AGREED BY THE BHEL, WILL NOT ENTAIL THE VENDOR TO CLAIM ANY INCREASE IN THE PRICE ON WHATSOEVER ACCOUNT. NOTWITHSTANDING ABOVE PROVISIONS, BHEL SHALL RESERVE THE RIGHT TO CANCEL THE ORDER/ CONTRACT, WHOLLY OR PARTLY, IN ORDER TO MEET THE OVERALL PROJECT SCHEDULE AND MAKE ALTERNATIVE ARRANGEMENTS. IF DEEMED NECESSARY, BHEL MAY TAKEOVER PARTLY PROCESSED MATERIAL AT A MUTUALLY AGREED PRICE.	
47	**FRAUD PREVENTION POLICY :** THE BIDDER ALONG WITH ITS ASSOCIATE/ COLLABORATORS/ SUB-CONTRACTORS/ SUB-VENDORS/ CONSULTANTS/ SERVICE PROVIDERS SHALL STRICTLY ADHERE TO BHEL FRAUD PREVENTION POLICY DISPLAYED ON BHEL WEBSITE WWW.BHEL.COM AND SHALL IMMEDIATELY BRING TO THE NOTICE OF BHEL MANAGEMENT ABOUT ANY FRAUD OR SUSPECTED FRAUD AS SOON AS IT COMES TO THEIR NOTICE.	
48	**SHORT SHIPMENTS/ WARRANTY/GUARANTEE REPLACEMENTS**: IN CASE OF ANY SHORT SHIPMENT DURING INITIAL SUPPLY WHICH IS SUBSEQUENTLY DISPATCHED BY THE VENDOR OR ANY GUARANTEE / WARRANTY REPLACEMENTS SHALL BE DISPATCHED ON "FOR-BHEL STORES/DESIGNATED DESTINATION" BASIS FOR INDIGENOUS ITEMS. TAXES, IF ANY PAID BY INDIGENOUS VENDOR FOR GUARANTEE /WARRANTEE REPLACEMENT, REPAIR ACTIVITY EXCLUDING SHORT SUPPLY SHALL BE TO VENDOR'S ACCOUNT ONLY. THE VENDOR HAS TO RAISE A CREDIT NOTE FOR SHORT SUPPLIED QUANTITY AS PER GST PROVISIONS.	
49	**E WAY BILL**: THE SUPPLIER HAS TO ARRANGE FOR E WAY BILL AS APPLICABLE FOR ANY MOVEMENT OF GOODS ALONG WITH OTHER PRESCRIBED DOCUMENTS AS PER GST LAW. THE SUPPLIER HAS ALSO TO COMPLY WITH ANY AMENDMENT AS PRESCRIBED FROM TIME TO TIME UNDER E WAY BILL RULE. ANY FINANCIAL IMPLICATION ARISES ON BHEL DUE TO NONCOMPLIANCE OF E WAY BILL RULE WILL BE PASSED ON TO THE SUPPLIER.	
50	THE BIDDER DECLARES THAT THEY WILL NOT ENTER INTO ANY ILLEGAL OR UNDICLOSED AGREEMENT OR UNDERSTANDING, WHETHER FORMAL OR INFORMAL WITH OTHER BIDDER (S). THIS APPLIES IN PARTICULAR TO PRICES, SPECIFICATIONS, CERTIFICATIONS, SUBSIDIARY CONTRACTS, SUBMISSION OR NON- SUBMISSION OF BIDS OR ANY OTHER ACTIONS TO RESTRICT COMPETITIVENES OR TO INTRODUE CARTELIZATION IN THE BIDDING PROCESS. IN CASE, THE BIDDER IS FOUND HAVING INDULGED IN ABOVE ACTIVITIES, SUITABLE ACTION SHALL BE TAKEN BY BHEL AS PER EXTANT POLICIES / GUIDELINES.	
51	THE BIDDER SHALL REGISTER THEMSELVES ON GEM PORTAL AND SHALL QUOTE THEIR GEM SELLER ID IN THEIR OFFER. GEM SELLER ID IS MANDATORY FOR PLACEMENT OF PURCHASE ORDER EXCEPT IN CASES WHERE FREE ISSUE MATERIAL IS TO BE ISSUED BY BHEL .	
52	**REJECTION/REPLACEMENT:** THE SELLER SHALL ARRANGE REPLACEMENT / REPAIR UNDER ITS OBLIGATION UNDER THE CONTRACT. SELLER SHALL BE GIVEN GROUND RENT FREE PERIOD OF 90 DAYS FROM THE DATE OF REJECTION TO LIFT REJECTED MATERIAL. BEYOND 90 DAYS, A GROUND RENT OF 0.25% OF VALUE OF REJECTED MATERIAL PER WEEK WILL BE LEVIED FOR A MAXIMUM PERIOD OF 4 WEEKS. BEYOND THIS PERIOD SUPPLIER FORFEITS THEIR RIGHT TO THE MATERIALS.	
53	**CONFLICT OF INTEREST AMONG BIDDERS/AGENTS:** A BIDDER SHALL NOT HAVE CONFLICT OF INTEREST WITH OTHER BIDDERS. SUCH CONFLICT OF INTEREST CAN LEAD TO ANTI-COMPETITIVE PRACTICES TO THE DETRIMENT OF PROCURING ENTITY'S INTERESTS. THE BIDDER FOUND TO HAVE A CONFLICT OF INTEREST SHALL BE DISQUALIFIED. A BIDDER MAY BE CONSIDERED TO HAVE A CONFLICT OF INTEREST WITH ONE OR MORE PARTIES IN THIS BIDDING PROCESS, IF a) THEY HAVE CONTROLLING PARTNER (S) IN COMMON; OR b) THEY RECEIVE OR HAVE RECEIVED ANY DIRECT OR INDIRECT SUBSIDY FINANCIAL STAKE FROM ANY OF THEM; OR c) THEY HAVE THE SAME LEGAL REPRESENTATIVE/AGENT FOR PURPOSES OF THIS BID; OR d) THEY HAVE RELATIONSHIP WITH EACH OTHER, DIRECTLY OR THROUGH COMMON THIRD PARTIES, THAT PUTS THEM IN A POSITION TO HAVE ACCESS TO INFORMATION ABOUT OR INFLUENCE ON THE BID OF ANOTHER BIDDER; OR e) BIDDER PARTICIPATES IN MORE THAN ONE BID IN THIS BIDDING PROCESS. PARTICIPATION BY A BIDDER IN MORE THAN ONE BID WILL RESULT IN THE DISQUALIFICATION OF ALL BIDS IN WHICH THE PARTIES ARE INVOLVED. HOWEVER, THIS DOES NOT LIMIT THE INCLUSION OF THE COMPONENTS/ SUB-ASSEMBLY ASSEMBLIES FROM ONE BIDDING MANUFACTURER IN MORE THAN ONE BID; OR	

	f) IN CASES OF AGENTS QUOTING IN OFFSHORE PROCUREMENTS, ON BEHALF OF THEIR PRINCIPAL MANUFACTURERS, ONE AGENT CANNOT REPRESENT TWO MANUFACTURERS OR QUOTE ON THEIR BEHALF IN A PARTICULAR TENDER ENQUIRY. ONE MANUFACTURER CAN ALSO AUTHORISE ONLY ONE AGENT/DEALER. THERE CAN BE ONLY ONE BID FROM THE FOLLOWING: 1. THE PRINCIPAL MANUFACTURER DIRECTLY OR THROUGH ONE INDIAN AGENT ON HIS BEHALF; AND 2. INDIAN/FOREIGN AGENT ON BEHALF OF ONLY ONE PRINCIPAL; OR g) A BIDDER OR ANY OF ITS AFFILIATES PARTICIPATED AS A CONSULTANT IN THE PREPARATION OF THE DESIGN OR TECHNICAL SPECIFICATIONS OF THE CONTRACT THAT IS THE SUBJECT OF THE BID; OR H) IN CASE OF A HOLDING COMPANY HAVING MORE THAN ONE INDEPENDENTLY MANUFACTURING UNITS, OR MORE THAN ONE UNIT HAVING COMMON BUSINESS OWNERSHIP/MANAGEMENT, ONLY ONE UNIT SHOULD QUOTE. SIMILAR RESTRICTIONS WOULD APPLY TO CLOSELY RELATED SISTER COMPANIES. BIDDERS MUST PROACTIVELY DECLARE SUCH SISTER/ COMMON BUSINESS/ MANAGEMENT UNITS IN SAME/ SIMILAR LINE OF BUSINESS.	
54	VENDOR MUST VISIT OUR WEBSITE https://herp.bhel.com REGULARILY FOR ENQUIRY/PO/CLARIFICATIONS/FOR ANY LATEST UPDATES.	
55	MSME VENDORS CAN AVAIL BENEFITS OF PAYMENT THROUGH TREDS/RXIL.	
56	"THE OFFERS OF THE BIDDERS WHO ARE UNDER SUSPENSION AS ALSO THE OFFERS OF THE BIDDERS, WHO ENGAGE THE SERVICES OF THE FIRMS DEBARRED ACROSS BHEL, SHALL BE REJECTED. THE LIST OF FIRMS DEBARRED ACROSS BHEL IS AVAILABLE ON BHEL WEBSITE WWW.BHEL.COM. 1.0 INTEGRITY COMMITMENT, PERFORMANCE OF THE CONTRACT AND PUNITIVE ACTION THEREOF: 1.1. COMMITMENT BY BHEL: BHEL COMMITS TO TAKE ALL MEASURES NECESSARY TO PREVENT CORRUPTION IN CONNECTION WITH THE TENDER PROCESS AND EXECUTION OF THE CONTRACT. BHEL WILL DURING THE TENDER PROCESS TREAT ALL BIDDER(S) IN A TRANSPARENT AND FAIR MANNER, AND WITH EQUITY. 1.2. COMMITMENT BY BIDDER/ SUPPLIER/ CONTRACTOR: 1.2.1. THE BIDDER/ SUPPLIER/ CONTRACTOR COMMIT TO TAKE ALL MEASURES TO PREVENT CORRUPTION AND WILL NOT DIRECTLY OR INDIRECTLY INFLUENCE ANY DECISION OR BENEFIT WHICH HE IS NOT LEGALLY ENTITLED TO NOR WILL ACT OR OMIT IN ANY MANNER WHICH TANTAMOUNT TO AN OFFENCE PUNISHABLE UNDER ANY PROVISION OF THE INDIAN PENAL CODE, 1860 OR ANY OTHER LAW IN FORCE IN INDIA. 1.2.2. THE BIDDER/ SUPPLIER/ CONTRACTOR WILL, WHEN PRESENTING HIS BID, DISCLOSE ANY AND ALL PAYMENTS HE HAS MADE, AND IS COMMITTED TO OR INTENDS TO MAKE TO AGENTS, BROKERS OR ANY OTHER INTERMEDIARIES IN CONNECTION WITH THE AWARD OF THE CONTRACT AND SHALL ADHERE TO RELEVANT GUIDELINES ISSUED FROM TIME TO TIME BY GOVT. OF INDIA/ BHEL. 1.2.3. THE BIDDER/ SUPPLIER/ CONTRACTOR WILL PERFORM/ EXECUTE THE CONTRACT AS PER THE CONTRACT TERMS & CONDITIONS AND WILL NOT DEFAULT WITHOUT ANY REASONABLE CAUSE, WHICH CAUSES LOSS OF BUSINESS/ MONEY/ REPUTATION, TO BHEL. IF ANY BIDDER/ SUPPLIER/ CONTRACTOR DURING PRE-TENDERING/ TENDERING/ POST TENDERING/ AWARD/ EXECUTION/ POST-EXECUTION STAGE INDULGES IN MALPRACTICES, CHEATING, BRIBERY, FRAUD OR AND OTHER MISCONDUCT OR FORMATION OF CARTEL SO AS TO INFLUENCE THE BIDDING PROCESS OR INFLUENCE THE PRICE OR ACTS OR OMITS IN ANY MANNER WHICH TANTAMOUNT TO AN OFFENCE PUNISHABLE UNDER ANY PROVISION OF THE INDIAN PENAL CODE, 1860 OR ANY OTHER LAW IN FORCE IN INDIA, THEN, ACTION MAY BE TAKEN AGAINST SUCH BIDDER/ SUPPLIER/ CONTRACTOR AS PER EXTANT GUIDELINES OF THE COMPANY AVAILABLE ON WWW. BHEL.COM AND/OR UNDER APPLICABLE LEGAL PROVISIONS".	
57	**BID SECURITY OR EARNEST MONEY DEPOSIT (EMD):** TO SAFE GUARD AGAINST A BIDDER'S WITHDRAWING OR ALTERING ITS/ HIS BID DURING THE BID VALIDITY PERIOD, BID SECURITY [ALSO KNOWN AS EARNEST MONEY DEPOSIT (EMD)] SHALL BE OBTAINED FROM THE BIDDERS ALONG WITH THEIR BIDS (EXCEPT MICRO AND SMALL ENTERPRISES (MSES) OR STARTUPS AS RECOGNIZED BY DEPARTMENT FOR PROMOTION OF INDUSTRY AND INTERNAL TRADE (DPIIT)). THE AMOUNT OF EMD SHALL BE AS MENTIONED IN ENQUIRY. 1**. MODES OF DEPOSIT** A) THE EMD MAY BE ACCEPTED ONLY IN THE FOLLOWING FORMS AND THE SAME MUST BE SUBMITTED BEFORE TENDER OPENING: (I) ELECTRONIC FUND TRANSFER CREDITED IN BHEL ACCOUNT. (II) BANKER'S CHEQUE/ PAY ORDER/ DEMAND DRAFT, IN FAVOUR OF BHEL. (III) FIXED DEPOSIT RECEIPT (FDR).(IN THE NAME OF " BIDDER'S NAME A/C BHEL'') (IV) BANK GUARANTEE FROM ANY OF THE SCHEDULED BANKS. (V) INSURANCE SURETY BONDS. B) IN CASE THE EMD IS MORE THAN RUPEES TWO LAKH AND IN CASE OF FOREIGN BIDDERS, IT MAY BE IN THE FORM OF A BANK GUARANTEE (IN EQUIVALENT FOREIGN EXCHANGE AMOUNT, IN CASE OF FOREIGN BIDDERS) ISSUED/ CONFIRMED FROM ANY OF THE SCHEDULED COMMERCIAL BANK IN INDIA IN AN ACCEPTABLE FORM. THE EMD SHALL REMAIN VALID FOR A PERIOD OF 45 (FORTY-FIVE) DAYS BEYOND THE FINAL BID VALIDITY PERIOD. **2. FORFEITURE OF EMD** I) A BIDDER'S EMD WILL BE FORFEITED IF THE BIDDER WITHDRAWS OR AMENDS ITS/HIS TENDER OR IMPAIRS OR DEROGATES FROM THE TENDER IN ANY RESPECT WITHIN THE PERIOD OF VALIDITY OF THE TENDER OR IF THE SUCCESSFUL BIDDER FAILS TO FURNISH THE REQUIRED PERFORMANCE SECURITY WITHIN THE SPECIFIED PERIOD MENTIONED IN THE TENDER. (II) EMD BY THE TENDERER SHALL BE WITHHELD IN CASE ANY ACTION ON THE BIDDER IS ENVISAGED UNDER THE PROVISIONS OF EXTANT "GUIDELINES ON SUSPENSION OF BUSINESS DEALINGS WITH SUPPLIERS/ CONTRACTORS" AND FORFEITED/ RELEASED BASED ON THE ACTION AS DETERMINED UNDER THESE GUIDELINES. **3. RETURN OF EMD** (I) BID SECURITIES OF THE UNSUCCESSFUL BIDDERS SHALL BE RETURNED TO BIDDER AT THE EARLIEST AFTER EXPIRY OF THE FINAL BID VALIDITY PERIOD AND LATEST BY THE 30TH DAY AFTER THE AWARD OF THE CONTRACT. HOWEVER, IN CASE OF TWO PACKET OR TWO STAGE BIDDING, BID SECURITIES OF UNSUCCESSFUL BIDDERS DURING FIRST STAGE I.E. TECHNICAL EVALUATION ETC. SHALL BE RETURNED WITHIN 30 DAYS OF DECLARATION OF RESULT OF FIRST STAGE I.E. TECHNICAL EVALUATION ETC. (II) BID SECURITY SHALL BE REFUNDED TO THE SUCCESSFUL BIDDER ON CONCLUSION OF THE ORDER/ RECEIPT OF A PERFORMANCE SECURITY (IF CALLED IN THE TENDER). (III) EMD SHALL NOT CARRY ANY INTEREST.	
58	**PERFORMANCE SECURITY (PS):** TO ENSURE DUE PERFORMANCE OF THE CONTRACT, PERFORMANCE BANK GUARANTEE (PBG) OR SECURITY DEPOSIT (SD), HEREAFTER REFERRED AS PERFORMANCE SECURITY SHALL BE OBTAINED FROM THE SUCCESSFUL BIDDER AWARDED THE CONTRACT. THE PERFORMANCE SECURITY OF REQUIRED AMOUT IS TO BE SUBMITTED BY THE DATE SPECIFIED IN THE PO/CONTRACT. 1**. MODES OF DEPOSIT:** A) PERFORMANCE SECURITY MAY BE FURNISHED IN THE FOLLOWING FORMS: (I) LOCAL CHEQUES OF SCHEDULED BANKS (SUBJECT TO REALIZATION)/ PAY ORDER/ DEMAND DRAFT/ ELECTRONIC FUND TRANSFER IN FAVOUR OF BHEL. (II) BANK GUARANTEE FROM SCHEDULED BANKS / PUBLIC FINANCIAL INSTITUTIONS AS DEFINED IN THE COMPANIES ACT. THE BANK GUARANTEE FORMAT SHOULD HAVE THE APPROVAL OF BHEL. (III) FIXED DEPOSIT RECEIPT ISSUED BY SCHEDULED BANKS / PUBLIC FINANCIAL INSTITUTIONS AS DEFINED IN THE COMPANIES ACT (FDR SHOULD BE IN THE NAME OF THE **CONTRACTOR, A/C BHEL**). (IV) SECURITIES AVAILABLE FROM INDIAN POST OFFICES SUCH AS NATIONAL SAVINGS CERTIFICATES, KISAN VIKAS PATRAS ETC. (HELD IN THE NAME OF CONTRACTOR FURNISHING THE SECURITY AND DULY ENDORSED/ HYPOTHECATED/ PLEDGED, AS APPLICABLE, IN FAVOUR OF BHEL). (V) INSURANCE SURETY BOND. (NOTE: BHEL WILL NOT BE LIABLE OR RESPONSIBLE IN ANY MANNER FOR THE COLLECTION OF INTEREST OR RENEWAL OF THE DOCUMENTS OR IN ANY OTHER MATTER CONNECTED THEREWITH) B) IN CASE OF GTE TENDERS, THE PERFORMANCE SECURITY SHALL BE IN THE SAME CURRENCY AS THE CONTRACT AND MUST CONFORM TO UNIFORM RULES FOR DEMAND GUARANTEES (URDG 758) - AN INTERNATIONAL CONVENTION REGULATING INTERNATIONAL SECURITIES. (C) PERFORMANCE SECURITY IS TO BE FURNISHED WITHIN A SPECIFIED DATE (GENERALLY 14(FOURTEEN) DAYS AFTER NOTIFICATION OF THE AWARD) AND IT SHOULD REMAIN VALID FOR A PERIOD OF 60 (SIXTY) DAYS BEYOND THE DATE OF COMPLETION OF ALL CONTRACTUAL OBLIGATIONS OF THE SUPPLIER, INCLUDING WARRANTY OBLIGATIONS. 2. **FORFEITURE OF PERFORMANCE SECURITY:** THE PERFORMANCE SECURITY WILL BE FORFEITED AND CREDITED TO BHEL'S ACCOUNT IN THE EVENT OF A BREACH OF CONTRACT BY THE SUPPLIER. 3. **RETURN OF PERFORMANCE SECURITY (PS):** PS SHALL BE REFUNDED TO THE BIDDER WITHOUT INTEREST, AFTER HE DULY PERFORMS AND COMPLETES THE CONTRACT IN ALL RESPECTS BUT NOT LATER THAN 60(SIXTY) DAYS OF COMPLETION OF ALL SUCH OBLIGATIONS INCLUDING THE WARRANTY UNDER THE CONTRACT.	

	4. THE PERFORMANCE SECURITY SHALL NOT CARRY ANY INTEREST.	
59	**BREACH OF CONTRACT, REMEDIES AND TERMINATION:** IN CASE OF BREACH OF CONTRACT, WHEREVER THE VALUE OF SECURITY INSTRUMENTS LIKE PERFORMANCE BANK GUARANTEE AVAILABLE WITH BHEL AGAINST THE SAID CONTRACT IS ATLEAST 10% OF THE CONTRACT VALUE, THE SAME BE ENCASHED. IN CASE THE VALUE OF THE SECURITY INSTRUMENTS AVAILABLE IS LESS THAN 10% OF THE CONTRACT VALUE, THE BALANCE AMOUNT BE RECOVERED FROM OTHER FINANCIAL REMEDIES (I.E. AVAILABLE BILLS OF THE CONTRACTOR, RETENTION AMOUNT, ETC. WITH BHEL) OR LEGAL REMEDIES BE PURSUED. FURTHER, LEVY OF LIQUIDATED DAMAGES, DEBARMENT, TERMINATION, DE-SCOPING, SHORT-CLOSURE, ETC., SHALL BE APPLIED AS PER PROVISIONS OF THE CONTRACT.	

NOTE:

1. PLEASE FILL IN THIS FORMAT AND SEND COMPULSORILY ALONG WITH QUOTATION WITH VENDOR'S SEAL, SIGNATURE AND DATE.

SIGNATURE ALONG WITH SEAL AND DATE:

Annexure-1

INTEGRITY PACT

Between

Bharat Heavy Electricals Ltd. (BHEL), a company registered under the Companies Act 1956 and having its registered office at "BHEL House", Siri Fort, New Delhi - 110049 (India) hereinafter referred to as "The Principal", which expression unless repugnant to the context or meaning hereof shall include its successors or assigns of the ONE PART

and

_____, (description of the party along with address), hereinafter referred to as "The Bidder/ Contractor" which expression unless repugnant to the context or meaning hereof shall include its successors or assigns of the OTHER PART

Preamble

The Principal intends to award, under laid-down organizational procedures, contract/s for _____

_____

_____ (hereinafter referred to as "Contract"). The Principal values full compliance with all relevant laws of the land, rules and regulations, and the principles of economic use of resources, and of fairness and transparency in its relations with its Bidder(s)/ Contractor(s).

In order to achieve these goals, the Principal will appoint panel of Independent External Monitor(s) (IEMs), who will monitor the tender process and the execution of the contract for compliance with the principles mentioned above.

Section 1- Commitments of the Principal

1.1 The Principal commits itself to take all measures necessary to prevent corruption and to observe the following principles: -

1.1.1 No employee of the Principal, personally or through family members, will in connection with the tender for, or the execution of a contract, demand, take a promise for or accept, for self or third person, any material or immaterial benefit which the person is not legally entitled to.

1.1.2 The Principal will, during the tender process treat all Bidder(s) with equity and reason. The Principal will in particular, before and during the tender process, provide to all Bidder(s) the same information and will not provide to any Bidder(s) confidential/ additional information through which the Bidder(s) could obtain an advantage in relation to the tender process or the contract execution.

1.1.3 The Principal will exclude from the process all known prejudiced persons.

1.2 If the Principal obtains information on the conduct of any of its employees which is a penal offence under the Indian Penal Code 1860 and Prevention of Corruption Act 1988 or any other statutory penal enactment, or if there be a substantive suspicion in this regard, the Principal will inform its Vigilance Office and in addition can initiate disciplinary actions.

Section 2 - Commitments of the Bidder(s)/ Contractor(s)

2.1 The Bidder(s)/ Contractor(s) commit himself to take all measures necessary to prevent corruption. The Bidder(s)/ Contractor(s) commits himself to observe the following principles during participation in the tender process and during the contract execution.

2.1.1 The Bidder(s)/ Contractor(s) will not, directly or through any other person or firm, offer, promise or give to the Principal or to any of the Principal's employees involved in the tender process or the execution of the contract or to any third person any material, immaterial or any other benefit which he/ she is not legally entitled to, in order to obtain in exchange any advantage of any kind whatsoever during the tender process or during the execution of the contract.

2.1.2 The Bidder(s)/ Contractor(s) will not enter with other Bidder(s) into any illegal or undisclosed agreement or understanding, whether formal or informal. This applies in particular to prices, specifications, certifications, subsidiary contracts, submission or non-submission of bids or any other actions to restrict competitiveness or to introduce cartelization in the bidding process.

2.1.3 The Bidder(s)/ Contractor(s) will not commit any penal offence under the relevant Indian Penal Code (IPC) and Prevention of Corruption Act; further the Bidder(s)/ Contractor(s) will not use improperly, for purposes of competition or personal gain, or pass on to others, any information or document provided by the Principal as part of the business relationship, regarding plans, technical proposals and business details, including information contained or transmitted electronically.

2.1.4 Foreign Bidder(s)/ Contractor(s) shall disclose the name and address of agents and representatives in India and Indian Bidder(s)/ Contractor(s) to disclose their foreign principals or associates. The Bidder(s)/ Contractor(s) will, when presenting his bid, disclose any and all payments he has made, and is committed to or intends to make to agents, brokers or any other intermediaries in connection with the award of the contract.

2.2 The Bidder(s)/ Contractor(s) will not instigate third persons to commit offences outlined above or be an accessory to such offences.

2.3 The Bidder(s)/ Contractor(s) shall not approach the Courts while representing the matters to IEMs and shall await their decision in the matter.

Section 3 - Disqualification from tender process and exclusion from future contracts

If the Bidder(s)/ Contractor(s), before award or during execution has committed a transgression through a violation of Section 2 above, or acts in any other manner such as to put his reliability or credibility in question, the Principal is entitled to disqualify the Bidder(s)/ Contractor(s) from the tender process , terminate the contract, if already awarded, exclude from future business dealings and/ or take action as per the separate "Guidelines on Banning of Business dealings with Suppliers/ Contractors", framed by the Principal.

Section 4 - **Compensation for Damages**

4.1 If the Principal has disqualified the Bidder (s) from the tender process before award / order acceptance according to Section 3, the Principal is entitled to demand and recover the damages equivalent to Earnest Money Deposit/ Bid Security.

4.2 If the Principal is entitled to terminate the Contract according to Section 3, or terminates the Contract in application of Section 3 above , the Bidder(s)/ Cotractor (s) transgression through a violation of Section 2 above shall be construed breach of contract and the Principal shall be-entitled to demand and recover from the Contractor an amount equal to 5% of the contract value or the amount equivalent to Security Deposit/ Performance Bank Guarantee , whichever is higher, as damages, in addition to and without prejudice to its right to demand and recover compensation for any other loss or damages specified elsewhere in the contract.

Section 5 - Previous Transgression

5.1 The Bidder declares that no previous transgressions occurred in the last 3 (three) years with any other company in any country conforming to the anti-corruption approach or with any other Public Sector Enterprise in India that could justify his exclusion from the tender process.

5.2 If the Bidder makes incorrect statement on this subject, he can be disqualified from the tender process or the contract, if already awarded, can be terminated for such reason or action can be taken as per the separate "Guidelines on Banning of Business dealings with Suppliers/ Contractors", framed by the Principal.

Section 6 - Equal treatment of all Bidder (s)/ Contractor (s) / Sub-contractor (s)

6.1 The Principal will enter into Integrity Pacts with identical conditions as this Integrity Pact with all Bidders and Contractors.

6.2 In case of Sub-contracting, the Principal Contractor shall take the responsibility of the adoption of Integrity Pact by the Sub-contractor(s) and ensure that all Sub-contractors also sign the Integrity Pact.

6.3 The Principal will disqualify from the tender process all Bidders who do not sign this Integrity Pact or violate its provisions.

Section 7 - Criminal Charges against violating Bidders/ Contractors /Subcontractors

If the Principal obtains knowledge of conduct of a Bidder, Contractor or Subcontractor, or of an employee or a representative or an associate of a Bidder, Contractor or Subcontractor which constitutes corruption, or if the Principal has substantive suspicion in this regard, the Principal will inform the Vigilance Office.

Section 8 -Independent External Monitor(s)

8.1 The Principal appoints competent and credible panel of Independent External Monitor (s) (IEMs) for this Integrity Pact. The task of the IEMs is to review independently and objectively, whether and to what extent the parties comply with the obligations under this Integrity Pact.

8.2 The IEMs are not subject to instructions by the representatives of the parties and performs his functions neutrally and independently. He reports to the CMD, BHEL.

8.3 The IEMs shall be provided access to all documents/ records pertaining to the Contract, for which a complaint or issue is raised before them as and when warranted. However, the documents/records/information having National Security implications and those documents which have been classified as Secret/Top Secret are not to be disclosed.

8.4 The Principal will provide to the IEMs sufficient information about all meetings among the parties related to the Contract provided such meetings could have an impact on the contractual relations between the Principal and the Contractor. The parties offer to the IEMs the option to participate in such meetings.

8.5 The advisory role of IEMs is envisaged as that of a friend, philosopher and guide. The advice of IEMs would not be legally binding and it is restricted to resolving issues raised by a Bidder regarding any aspect of the tender which allegedly restricts competition or bias towards some Bidders. At the same time, it must be understood that IEMs are not consultants to the Management. Their role is independent in nature and the advice once tendered would not be subject to review at the request of the organization.

8.6 For ensuring the desired transparency and objectivity in dealing with the complaints arising out of any tendering process or during execution of Contract, the matter should be examined by the full panel of IEMs jointly, who would look into the records, conduct an investigation, and submit their joint recommendations to the Management.

8.7 The IEMs would examine all complaints received by them and give their recommendations/ views to the CMD, BHEL at the earliest. They may also send their report directly to the CVO, in case of suspicion of serious irregularities requiring legal/ administrative action. Only in case of very serious issue having a specific, verifiable Vigilance angle, the matter should be reported directly to the Commission. IEMs will tender their advice on the complaints within 30 days.

8.8 The CMD, BHEL shall decide the compensation to be paid to the IEMs and its terms and conditions.

8.9 IEMs should examine the process integrity, they are not expected to concern themselves with fixing of responsibility of officers. Complaints alleging mala fide on the part of any officer of the Prinicpal should be looked into by the CVO of the Principal.

8.10 If the IEMs have reported to the CMD, BHEL, a substantiated suspicion of an offence under relevant Indian Penal Code / Prevention of Corruption Act, and the CMD, BHEL has not, within reasonable time, taken visible action to proceed against such offence or reported it to the Vigilance Office, the IEMs may also transmit this information directly to the Central Vigilance Commissioner, Government of India.

8.11 After award of work, the IEMs shall look into any issue relating to execution of Contract, if specifically raised before them. As an illustrative example, if a Contractor who has been awarded the Contract, during the execution of Contract, raises issue of delayed payment etc. before the IEMs, the same shall be examined by the panel of IEMs. Issues like warranty/ guarantee etc. shall be outside the purview of IEMs.

8.12 However, the IEMs may suggest systemic improvements to the management of the Principal, if considered necessary, to bring about transparency, equity and fairness in the system of procurement.

8.13 The word `Monitor' would include both singular and plural.

Section 9 - Pact Duration

9.1 This Integrity Pact shall be operative from the date this Integrity Pact is signed by both the parties till the final completion of contract for successful Bidder, and for all other Bidders 6 months after the

Contract has been awarded. Any violation of the same would entail disqualification of the bidders and exclusion from future business dealings.

9.2 If any claim is made/ lodged during currency of this Integrity Pact, the same shall be binding and continue to be valid despite the lapse of this Pact as specified above, unless it is discharged/ determined by the CMD, BHEL.

Section 10 - Other Provisions

10.1 This Integrity Pact is subject to Indian Laws and exclusive jurisdiction shall be of the competent Courts as indicated in the Tender or Contract, as the case may be.

10.2 Changes and supplements as well as termination notices need to be made in writing.

10.3 If the Bidder(s)/ Contractor(s) is a partnership or a consortium or a joint venture, this Integrity Pact shall be signed by all partners of the partnership or joint venture or all consortium members.

10.4 Should one or several provisions of this Integrity Pact turn out to be invalid, the remainder of this Integrity Pact remains valid. In this case, the parties will strive to come to an agreement to their original intentions.

10.5 Only those bidders / contractors who have entered into this Integrity Pact with the Principal would be competent to participate in the bidding. In other words, entering into this Integrity Pact would be a preliminary qualification.

10.6 In the event of any dispute between the Principal and Bidder(s)/ Contractor(s) relating to the Contract, in case, both the parties are agreeable, they may try to settle dispute through Mediation before the panel of IEMs in a time bound manner. In case, the dispute remains unresolved even after mediation by the panel of IEMs, either party may take further action as the terms & conditions of the Contract. The fees/expenses on dispute resolution through mediation shall be shared by both the parties. Further, the mediation proceedings shall be confidential in nature and the parties shall keep confidential all matters relating to the mediation proceedings including any settlement agreement arrived at between the parties as outcome of mediation. Any views expressed, suggestions, admissions or proposals etc. made by either party in the course of mediation shall not be relied upon or introduced as evidence in any further arbitral or judicial proceedings, whether or not such proceedings relate to the dispute that is the subject of mediation proceedings. Neither of the parties shall present IEMs as witness in any Alternative Dispute Resolution or judicial proceedings in respect of the dispute that was subject of mediation.

---	---
For & On behalf of the Principal (Office Seal)	For & On behalf of the Bidder/ Contractor (Office Seal)

Place _____
Date _____

Witness:_____	Witness:_____
(Name & Address) _____	(Name & Address) _____

Annexure-2

Clause on IP in the tender

"Integrity Pact (IP)

(a) IP is a tool to ensure that activities and transactions between the Company and its Bidders/ Contractors are handled in a fair, transparent and corruption free manner. Following Independent External Monitors (IEMs) on the present panel have been appointed by BHEL with the approval of CVC to oversee implementation of IP in BHEL.

Sl	IEM	Email
1.	Shri Otem Dai, IAS (Retd.)	iem1@bhel.in
2.	Shri Bishwamitra Pandey, IRAS (Retd.)	iem2@bhel.in
3.	Shri Mukesh Mittal, IRS (Retd.)	iem3@bhel.in

(b) The IP as enclosed with the tender is to be submitted (duly signed by authorized signatory) along with techno-commercial bid (Part-I, in case of two/ three part bid). Only those bidders who have entered into such an IP with BHEL would be competent to participate in the bidding. In other words, entering into this Pact would be a preliminary qualification.

(c) Please refer Section-8 of IP for Role and Responsibilities of IEMs. In case of any complaint arising out of the tendering process, the matter may be referred to any of the above IEM(s). All correspondence with the IEMs shall be done through email only.

Note:

No routine correspondence shall be addressed to the IEM (phone/ post/ email) regarding the clarifications, time extensions or any other administrative queries, etc on the tender issued. All such clarification/ issues shall be addressed directly to the tender issuing (procurement) department's officials whose contact details are provided below:

Details of contact person(s):

(1)
Name:_____
Deptt: _____
Address: _____
Phone: (Landline/ Mobile)
_____
Email: _____
Fax: _____

(2)
Name:_____
Deptt: _____
Address: _____
Phone: (Landline/ Mobile)
_____
Email: _____
Fax: _____

FIRST ANGLE PROJECTION

(ALL DIMENSIONS ARE IN mm)

DRG. NO. 1-61-000-00256 SH. OF

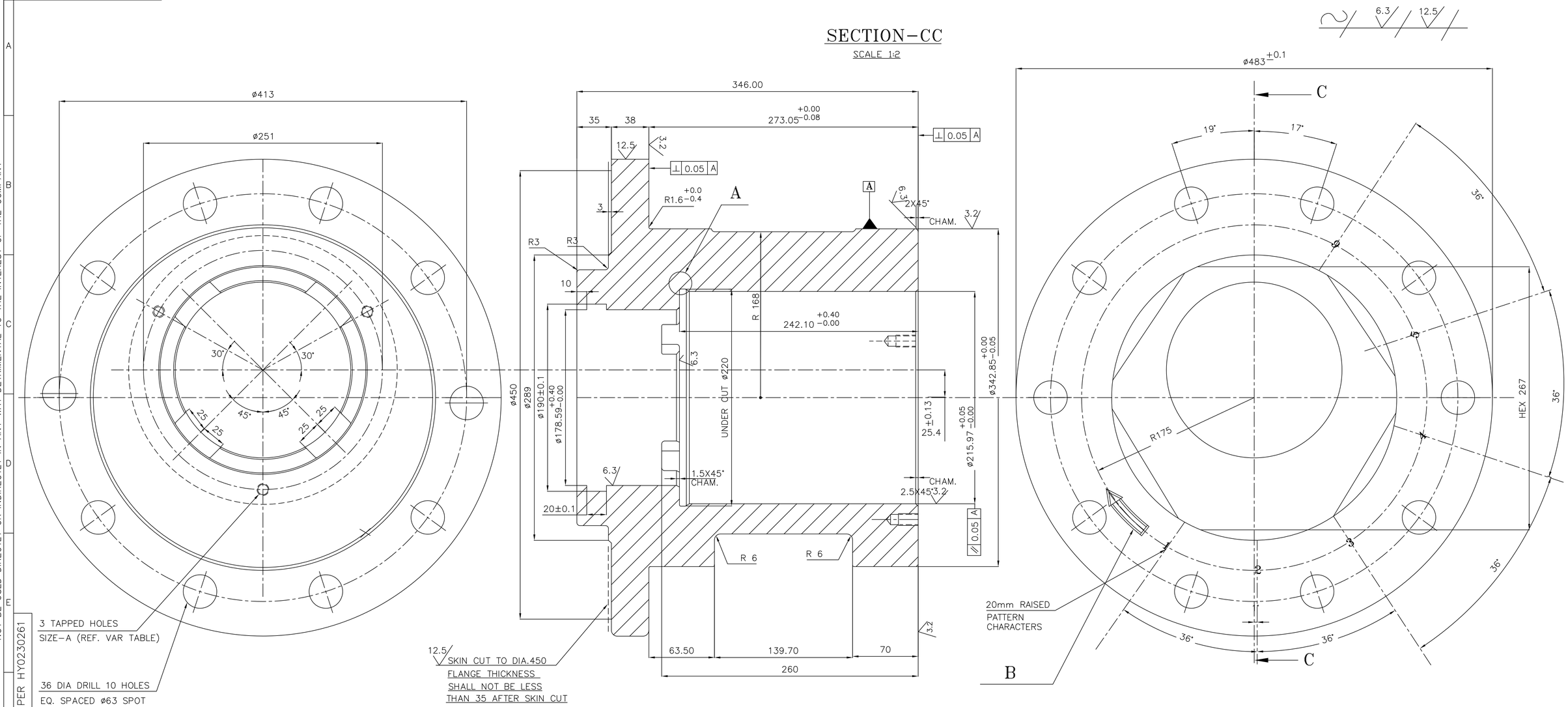

SIZE	VAR-01	VAR-02
A	1/2"-13 UNC2- -1" DEEP	M12-28 DEEP

VAR-01 : INCH TAPPING FOR SINGRAULI-VII AND KORBA-VI

VAR-02 : METRIC TAPPING FOR OTHER PROJECTS

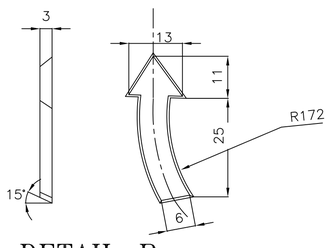

DETAIL-B

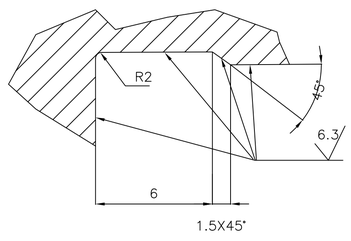

DETAIL-A

PATTERN NO. 1-61-000-00256

VARIANT NO	ITEM NO	DESCRIPTION	STD	DRAWING NO	ITEM NO / VAR NO	MATL CODE / MATL SPEC	UNIT WT / QTY
		CASTING				BA9110307060	150 00
						AA19703	

THE FOLLOWING CONDITIONS APPLY EXCEPT OTHERWISE STATED.

1. REF. TO HY0230261 FOR UNSPECIFIED TOLERANCES.
2. CHAMFER M/CD. SHARP EDGES 1.2 TO 1.0 AT 45°
3. INTERNAL M/CD. CORNER RADII 1 TO 0.7
4. THE SURFACE ROUGHNESS WHERE-EVER NOT SHOWN SHALL BE TAKEN FROM THE SURFACE ROUGHNESS SHOWN OUT SIDE THE BACK SLASH GIVEN ON THE TOP MOST RIGHT CORNER OF THE DRG.

TYPE OF PRODUCT OR NAME OF CUSTOMER/PROJECT: 1003XRP BOWL MILL

BHARAT HEAVY ELECTRICALS LIMITED
HYDERABAD

	NAME	SIGN.	DATE	NO.OF VAR.
DRN.	N.D.S		15.4.99	
CHD.	S.G		15.4.99	
APPD.	K.M.RAO		15.4.99	

DEPT. PUL.V.ENGG	UNTOL. DIMS. GR.		SCALE	WEIGHT (KG)	REF. TO ASSY. DRG.	ITEM NO.	NO.OF ITEMS
DEPT.CODE 446	G/M/F		NTS	150.00	1.61.000.01233 (D-101-00152-9)		03

TITLE: TRUNNION SHAFT END CAP-FREE END

CARD CODE

DRAWING NO. 1-61-000-00256 REV. 06

SHT. No NO. OF SHT.

REV.	DATE	ALTERED	CHD/APPD
06	09.01.06	VARIANT TABLE ADDED	V.KUMAR
05	10.6.03	GROOVE 20 X ø190 AT 10 FROM EDGE ADDED.	

ZONE

THE INFORMATION ON THIS DOCUMENT IS THE PROPERTY OF BHARAT HEAVY ELECTRICALS LIMITED. IT MUST NOT BE USED DIRECTLY OR INDIRECTLY IN ANY WAY DETRIMENTAL TO THE INTEREST OF THE COMPANY

GENERAL DIMENSIONAL LIMITS,FITS & TOLERANCES AS PER HY0230261

COMPUTER FILE NAME 61000256.DWG

REF. DRG. NO.

SIGN. AND DATE

INVENTORY NO

FIRST ANGLE PROJECTION (ALL DIMENSIONS ARE IN mm) BSES

DRG. NO. 1-61-000-00257

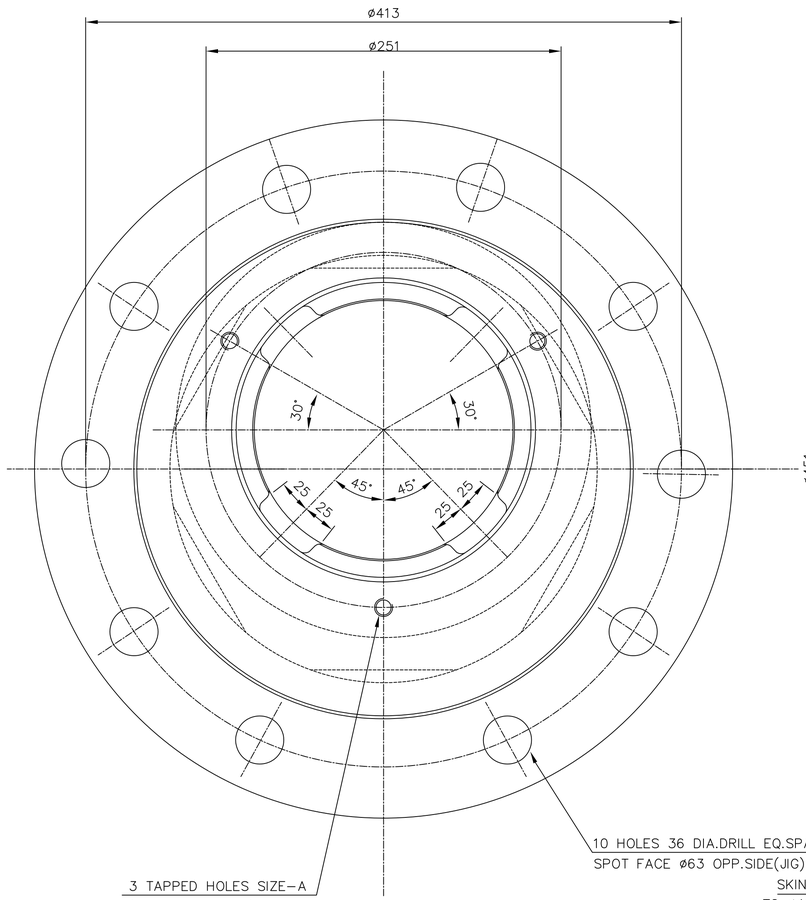

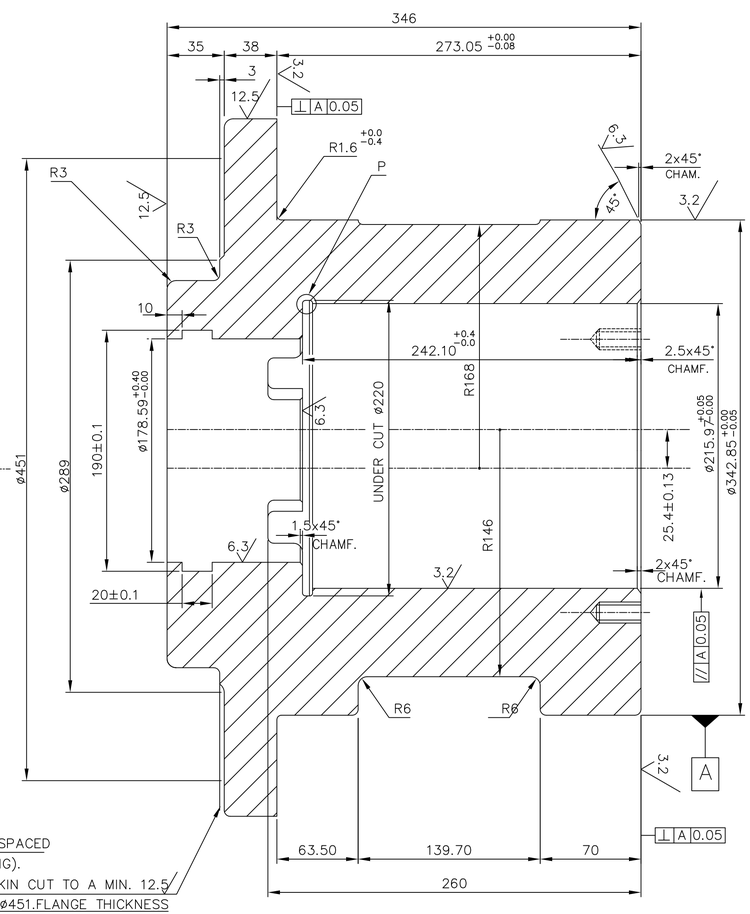

SECTION-AA

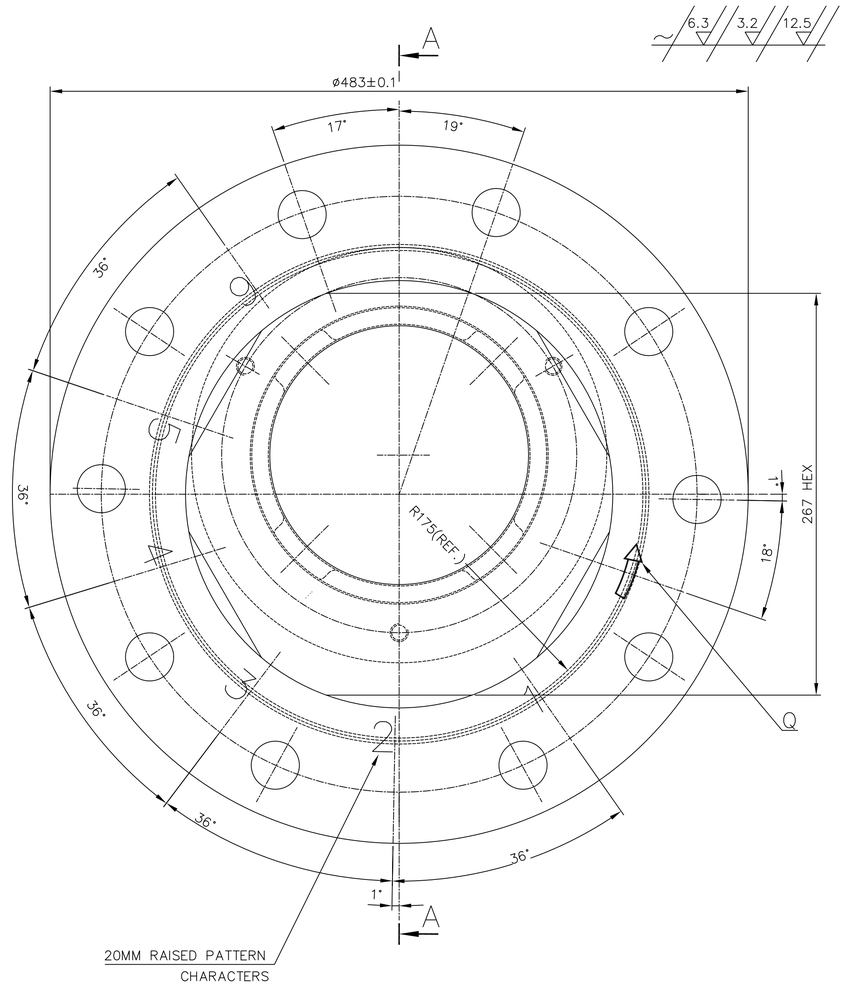

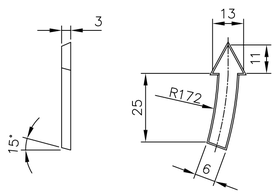

DETAIL-Q
(SCALE 1:1)

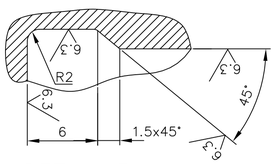

DETAIL-P
(SCALE 1:1)

SIZE	VAR-01	VAR-02
	1/2"-13 UNC2- -1" DEEP	M12-28 DEEP

VAR-01 : INCH TAPPING FOR SINGRAULI-VII AND KORBA-VI

VAR-02 : METRIC TAPPING FOR OTHER PROJECTS

NOTE:-

1. PATTERN NO. 1-61-000-00257
2. BREAK ALL SHARP EDGES AND CORNERS UNLESS OTHERWISE NOTED.

ITEM NO	DESCRIPTION	DRAWING NO.	MATERIAL CODE / MATERIAL SPECN.	NET WT.	GROSS WT. / QUANTITY
01	CASTING		BA9110307052 / AA 19703	150.00	000

THE FOLLOWING CONDITIONS APPLY EXCEPT OTHERWISE STATED...

1. REF.TO HY0230261 FOR UNSPECIFIED TOLERANCES.
2. CHAMFER M/CD SHARP EDGES 1.2 TO 1.0 AT 45°.
3. INTERNAL M/CD CORNER RADII 1 TO 0.7.
4. THE SURFACE ROUGHNESS WHEREVER NOT SHOWN SHALL BE TAKEN FROM THE SURFACE ROUGHNESS SHOWN OUT SIDE BACK SLASHES GIVEN AT THE TOP MOST RIGHT CORNER OF THE DRG.

TYPE OF PRODUCT OR NAME OF CUSTOMER/PROJECT: 1003 XRP BM

BHARAT HEAVY ELECTRICALS LTD. HYDERABAD

	NAME	SIGN.	DATE
DRN.	N.D.S		15.4.99
CHD.	S.G		15.4.99
APPD.	K.M.RAO		15.4.99

NO.OF VAR.

DEPT.	GRADE OF UNTOL. DIM.	SCALE	WEIGHT (KG)	REF. TO ASSY DRG.	ITEM NO.	NO.OF ITEMS
MILLS CODE 240	ø / M / f	1:2	150.00	0 61 000 00080 (D-101-00151-9)	46	

TITLE: TRUNNION SHAFT END CAP-THRUST END

DRAWING NO. 1-61-000-00257 REV. 05

SHEET NO. NO OF SHEETS

REV.	DATE	ALTERED	CHECKED	APPD.
05	09.01.06	VARIANT TABLE ADDED	V.KUMAR	
04	10.06.03	GROOVE ø190 X 20 X 10 FROM EDGE ADDED.		

ZONE

THE INFORMATION ON THIS DOCUMENT IS THE PROPERTY OF BHARAT HEAVY ELECTRICALS LIMITED.
IT MUST NOT BE USED DIRECTLY OR INDIRECTLY IN ANY WAY DETRIMENTAL TO THE INTEREST OF THE COMPANY

COMPUTER FILE NAME : 16100257.DWG

REF. DRG. NO. | SIGN. AND DATE | INVENTORY NO

FIRST ANGLE PROJECTION (ALL DIMENSIONS ARE IN mm) C.C.S.

DRG. NO. 1-61-004-01191

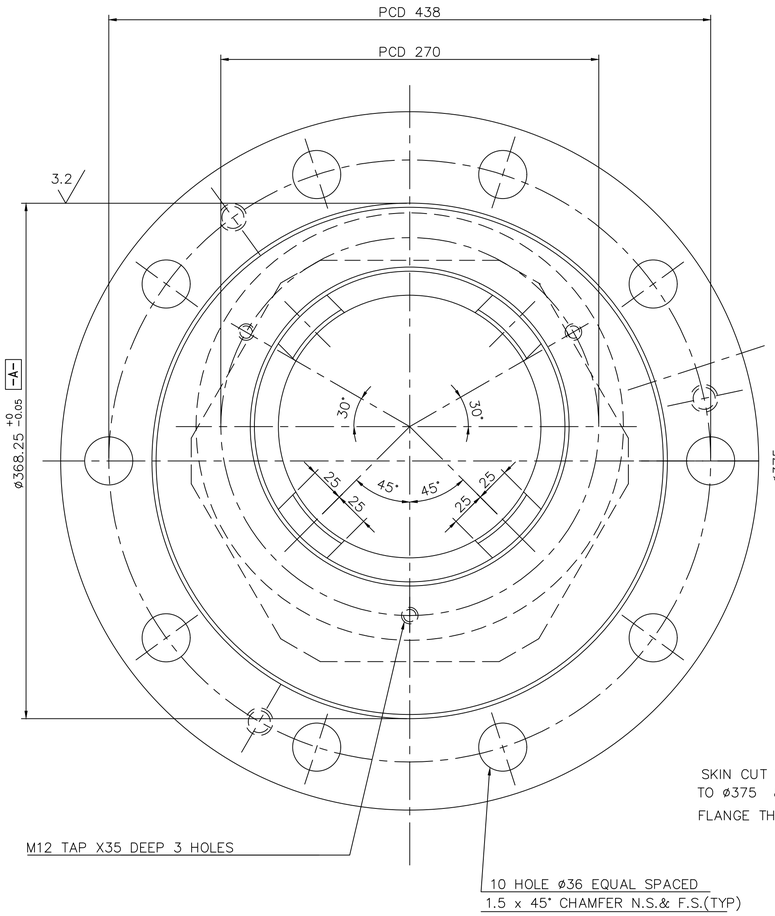

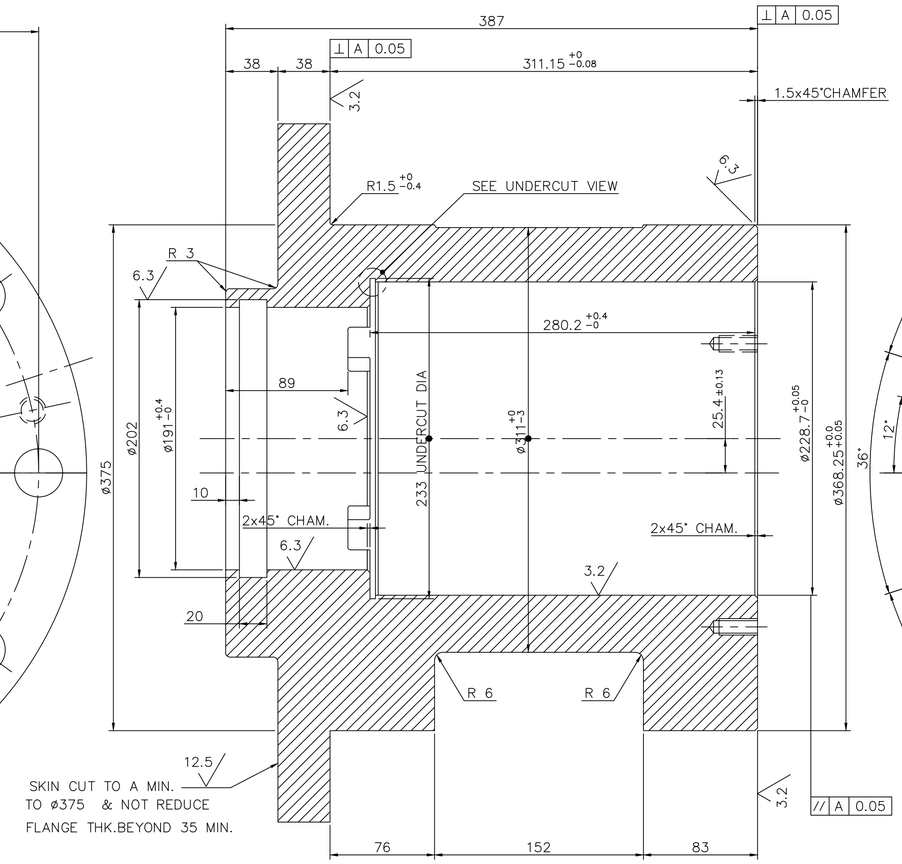

SECTION A–A

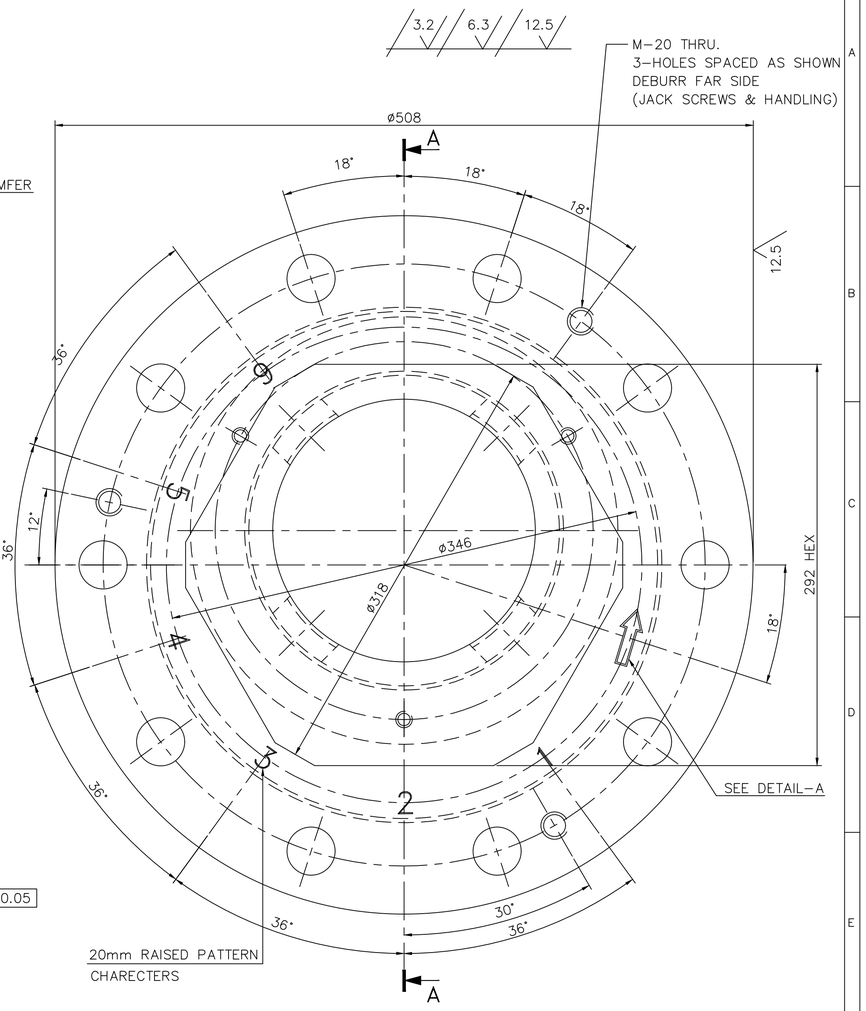

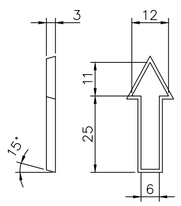

DETAIL–A

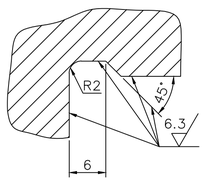

UNDERCUT VIEW

NOTES:–

1. BREAK ALL SHARP EDGES AND CORNERS UNLESS OTHERWISE NOTED.
2. TOLERANCES UNLESS OTHERWISE NOTED.
   CASTING ±1.6"
   FORGING ±0.1"

F/M MAT CODE : BA9711031019

ITEM NO.	DESCRIPTION	DRAWING NO.	VAR. NO.	RAW MATERIAL SIZE OR CASTING DRG. NO. OR FORGING DRG. NO.	MATERIAL CODE / MATERIAL SPECN.	NET WT. / QUANTITY	GROSS WT.
01	CASTING				BA9110353119 / AA 19703	200.000	

REV.	DATE	ALTERED	CHD./APPD.	ZONE	GROOVE ø202X20 WIDTH ADDED.
04	07.02.09				
03	17.12.07				F/M MAT CODE ADDED.
02	4.6.99				DRAWING REDRAWN IN ACAD. INCORPORATING PREVIOUR REV. VARIANTS 01 & 02 ADDED.

THE FOLLOWING CONDITIONS APPLY EXCEPT OTHERWISE STATED.

1. REF. TO HY0230261 FOR UNSPECIFIED TOLERANCES.
2. CHAMFER M/CD. SHARP EDGES 1.2 TO 1.0 AT 45°.
3. INTERNAL M/CD. CORNER RADII 1 TO 0.7
4. THE SURFACE ROUGHNESS WHERE-EVER NOT SHOWN SHALL BE TAKEN FROM THE SURFACE ROUGHNESS SHOWN OUT SIDE THE BACK SLASH GIVEN OR THE TOP MOST RIGHT CORNER OF THE DRG.

TYPE OF PRODUCT: 1103 XRP BOWL MILL

NAME OF CUSTOMER/PROJECT

BHARAT HEAVY ELECTRICALS LIMITED HYDERABAD

	NAME	SIGN.	DATE
DRN.	C.C.S		4.6.99
CHD.	ND.SAMUEL		4.6.99
APPD.	S.GHATGE		4.6.99

NO.OF VAR.

DEPT.	UNTOL. DIMS. GR.	SCALE	WEIGHT (KG)	REF. TO ASSY DRG.	ITEM NO.	NO.OF ITEMS
PUL.V. CODE 446	¢/M/F	1:2	200.000	0-61-004-00571	03	32

TITLE: TRUNNION SHAFT END CAP–THRUST END

CARD CODE

DRAWING NO. 1-61-004-01191 REV. 04

SHEET NO. 01 NO OF SHEETS 01

THE INFORMATION ON THIS DOCUMENT IS THE PROPERTY OF BHARAT HEAVY ELECTRICALS LIMITED. IT MUST NOT BE USED DIRECTLY OR INDIRECTLY IN ANY WAY DETERIMENTAL TO THE INTEREST OF THE COMPANY

COMPUTER FILE NAME 16101191.DWG | REF. DRG. NO. 0-61-004-00571 | SIGN. AND DATE | INVENTORY NO

FIRST ANGLE PROJECTION (ALL DIMENSIONS ARE IN mm) C.C.S.

DRG. NO. 1-61-004-01192

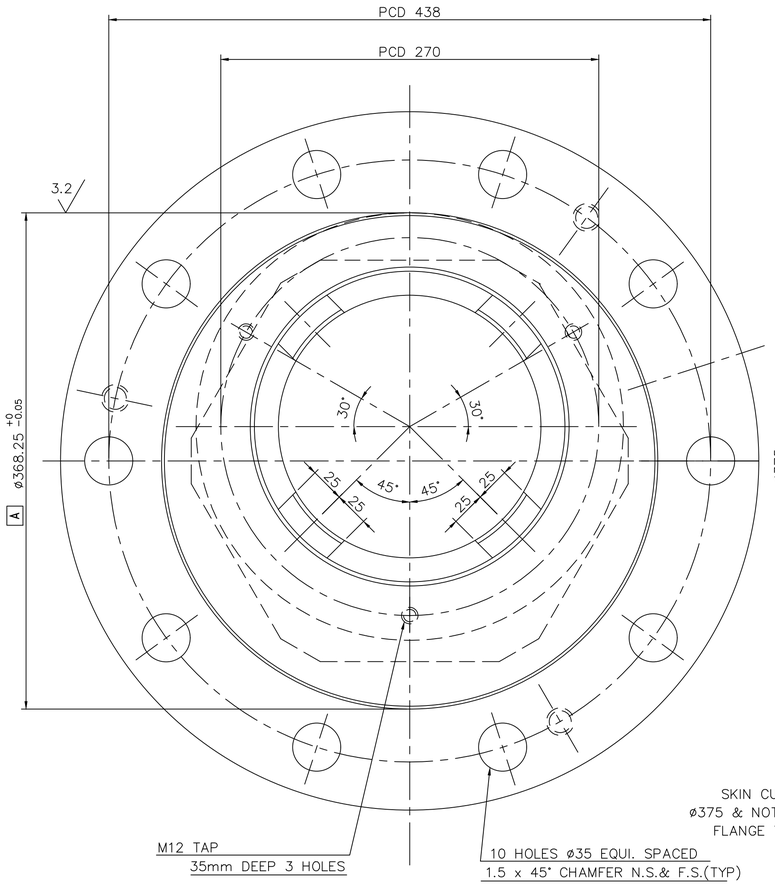

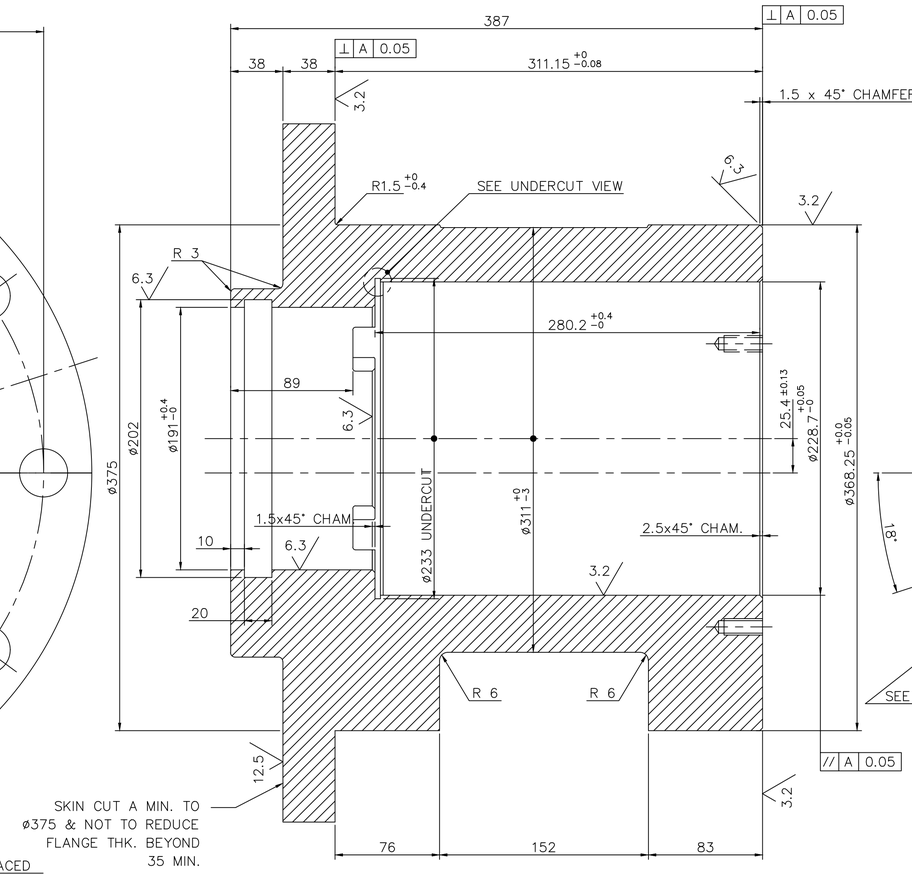

SECTION–AA

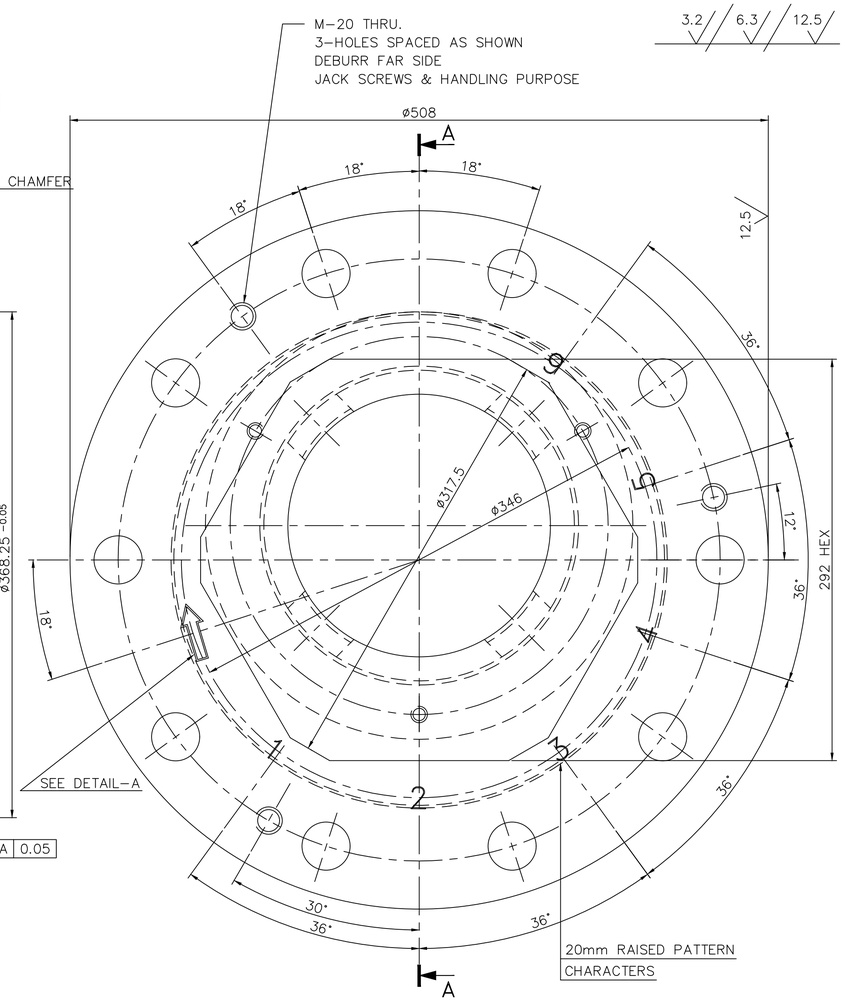

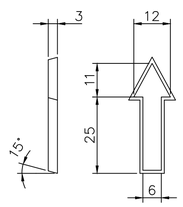

DETAIL–A
FULL SCALE

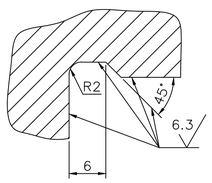

UNDERCUT VIEW
DOUBLE SIZE

NOTES:–

1. BREAK ALL SHARP EDGES AND CORNERS UNLESS OTHERWISE NOTED.
2. TOLERANCES UNLESS OTHERWISE NOTED.
   CASTING ±1.6"
   FORGING ±0.1"

F/M MAT CODE : BA9711031027

ITEM NO.	DESCRIPTION	DRAWING NO.	VAR. NO.	RAW MATERIAL SIZE OR CASTING DRG. NO. OR FORGING DRG. NO.	MATERIAL CODE / MATERIAL SPECN.	NET WT. / QUANTITY	GROSS WT.
01	CASTING				BA9110353127 / AA 19703	200.000	

THE FOLLOWING CONDITIONS APPLY EXCEPT OTHERWISE STATED.

1. REF. TO HY0230261 FOR UNSPECIFIED TOLERANCES.
2. CHAMFER M/CD. SHARP EDGES 1.2 TO 1.0 AT 45°.
3. INTERNAL M/CD. CORNER RADII 1 TO 0.7
4. THE SURFACE ROUGHNESS WHERE–EVER NOT SHOWN SHALL BE TAKEN FROM THE SURFACE ROUGHNESS SHOWN OUT SIDE THE BACK SLASH GIVEN OR THE TOP MOST RIGHT CORNER OF THE DRG.

TYPE OF PRODUCT
NAME OF CUSTOMER/PROJECT: 1103 XRP BOWL MILL

BHARAT HEAVY ELECTRICALS LIMITED HYDERABAD

	NAME	SIGN.	DATE	NO.OF VAR.
DRN.	C.C.S		16.6.99	
CHD.	N.D.SAMUEL		16.6.99	
APPD.	S.GHATGE		16.6.99	

DEPT.	UNTOL. DIMS. GR.		SCALE	WEIGHT (KG)	REF. TO ASSY DRG.	ITEM NO.	NO.OF ITEMS
PULV.	¢/M/F		1:2	200.000	0-61-104-00571	10	32
CODE 446							

TITLE: TRUNNION SHAFT END CAP–FREE END

CARD CODE

DRAWING NO. 1-61-004-01192 REV. 03

SHEET NO. 01 NO OF SHEETS 01

REV.	DATE	ALTERED	ZONE
03	07.02.09	CHD./APPD.	GROOVE ø202X20 WIDTH ADDED.
02	17.12.07	CHD./APPD.	F/M MAT CODE ADDED.
01	15.6.99	CHD./APPD.	DRAWING REDRAWN IN AUTOCAD. VARIANTS ADDED.

THE INFORMATION ON THIS DOCUMENT IS THE PROPERTY OF BHARAT HEAVY ELECTRICALS LIMITED.
IT MUST NOT BE USED DIRECTLY OR INDIRECTLY IN ANY WAY DETERIMENTAL TO THE INTEREST OF THE COMPANY

COMPUTER FILE NAME 10041192.DWG
REF. DRG. NO. D-110-00104-06
SIGN. AND DATE
INVENTORY NO

FIRST ANGLE PROJECTION

(ALL DIMENSIONS ARE IN mm)

BSES

DRG. NO. 1-61-288-01034

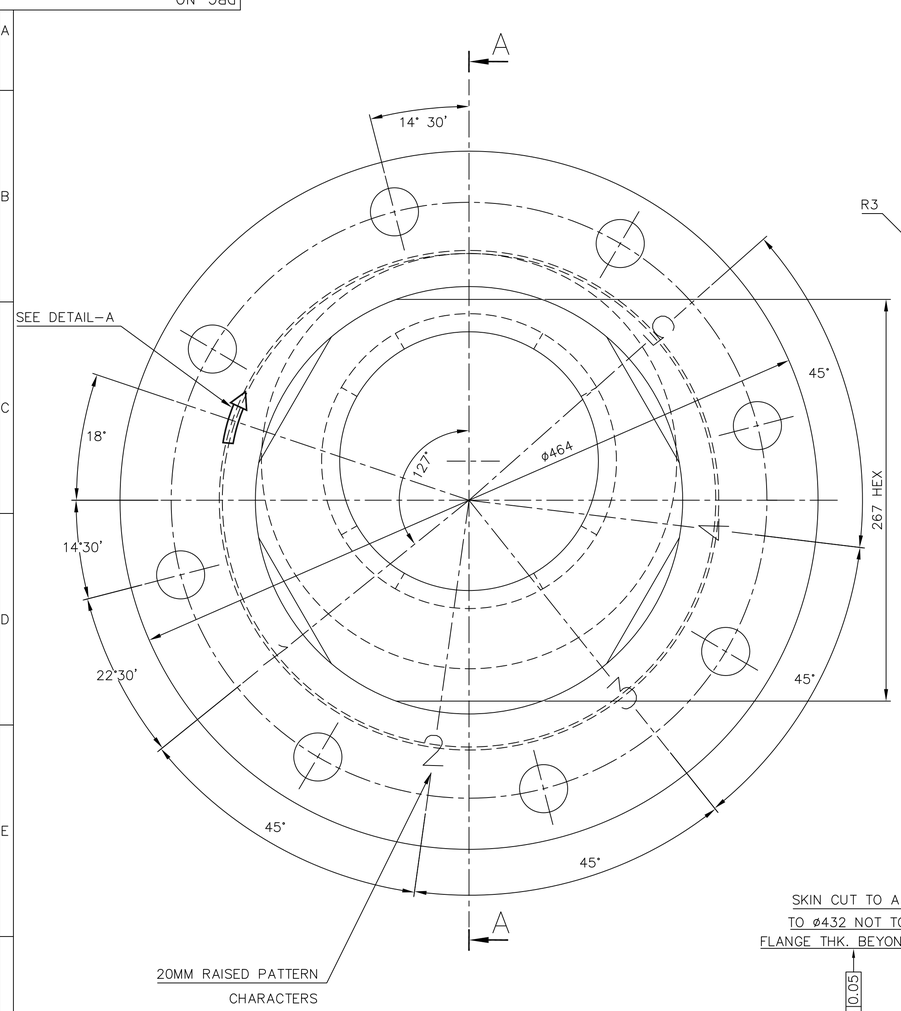

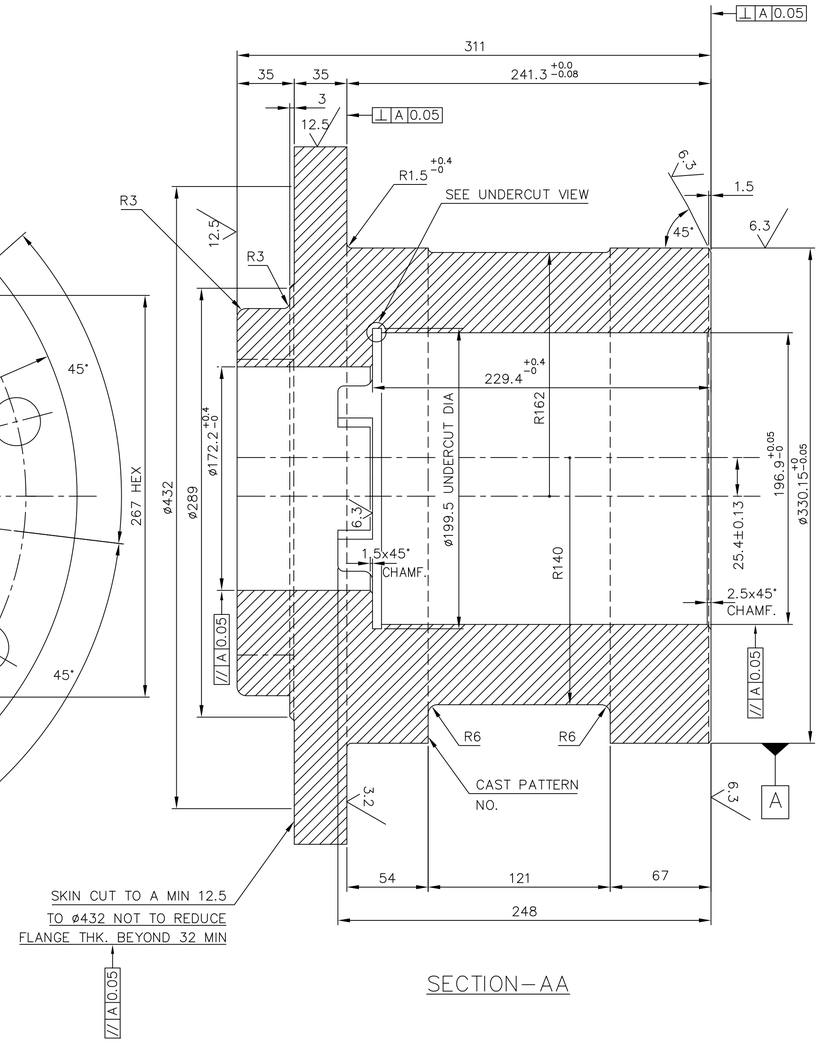

SECTION–AA

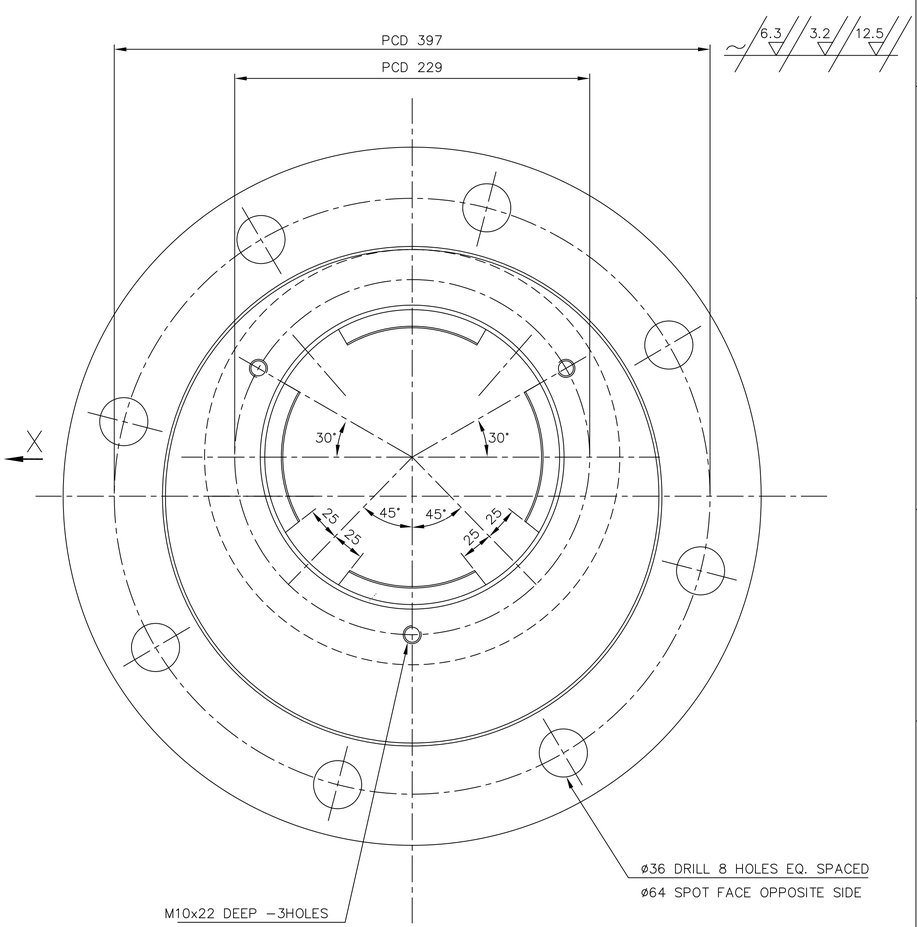

VIEW–X

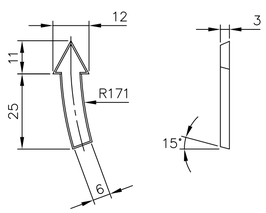

DETAIL–A

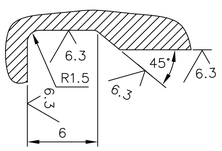

UNDERCUT VIEW

NOTE: –

1. THIS IS A FINISH MACHINED DRAWING. CASTING SHALL BE SUPPLIED IN STRESS RELIEVED AND ROUGH MACHINED CONDITION WITH 5mm ALOWANCE ON ALL MACHINED SURFACES.
2. BREAK ALL SHARP EDGES AND CORNERS UNLESS OTHERWISE NOTED.

ITEM NO	DESCRIPTION	DRAWING NO.	MATERIAL CODE / MATERIAL SPECN.	NET WT.	GROSS WT.
01	CASTING		BA9110206582 / AA19702	120.00	1

THE FOLLOWING CONDITIONS APPLY EXCEPT OTHERWISE STATED...

1. REF.TO HY0230261 FOR UNSPECIFIED TOLERANCES.
2. CHAMFER M/CD SHARP EDGES 1.2 TO 1.0 AT 45°.
3. INTERNAL M/CD CORNER RADII 1 TO 0.7.
4. THE SURFACE ROUGHNESS WHEREVER NOT SHOWN SHALL BE TAKEN FROM THE SURFACE ROUGHNESS SHOWN OUT SIDE BACK SLASHES GIVEN AT THE TOP MOST RIGHT CORNER OF THE DRG.

TYPE OF PRODUCT OR NAME OF CUSTOMER/PROJECT: 883 XRP BOWL MILL

BHARAT HEAVY ELECTRICALS LTD. HYDERABAD

	NAME	SIGN.	DATE
DRN.	BSES		12.12.98
CHD.	G.S.N.M.RAO		2.12.03
APPD.			

NO.OF VAR.

DEPT. BMD	GRADE OF UNTOL. DIM.	SCALE	WEIGHT (KG)	REF. TO ASSY DRG.	ITEM NO.	NO.OF ITEMS
CODE 446	¢ / M / f	1:2	120.00	1.61.088.01022	03	24

TITLE: TRUNNION SHAFT END CAP (FREE END)

DRAWING NO. 1-61-088-01034 REV. 03

SHEET NO. 01 NO OF SHEETS 01

REV.	DATE	ALTERED	CHECKED	APPD.
03	12/12/98	BSES	G.S.N.M.R	

DRAWING REDRAWN ON AUTOCAD INCORPORATING ALL PREVIOUS REVISIONS

THE INFORMATION ON THIS DOCUMENT IS THE PROPERTY OF BHARAT HEAVY ELECTRICALS LIMITED.
IT MUST NOT BE USED DIRECTLY OR INDIRECTLY IN ANY WAY DETRIMENTAL TO THE INTEREST OF THE COMPANY

COMPUTER FILE NAME : 16101034.DWG

REF. DRG. NO. (D-94-146/5)

SIGN. AND DATE

INVENTORY NO

FIRST ANGLE PROJECTION (ALL DIMENSIONS ARE IN mm) BSES

DRG. NO. 1-61-288-01035

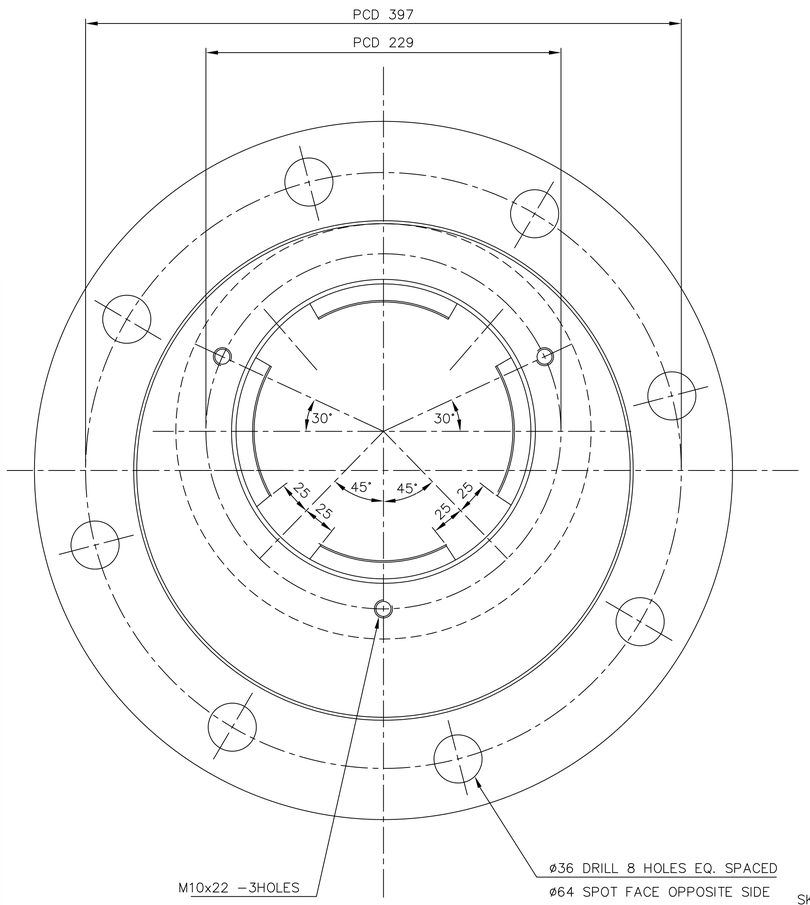

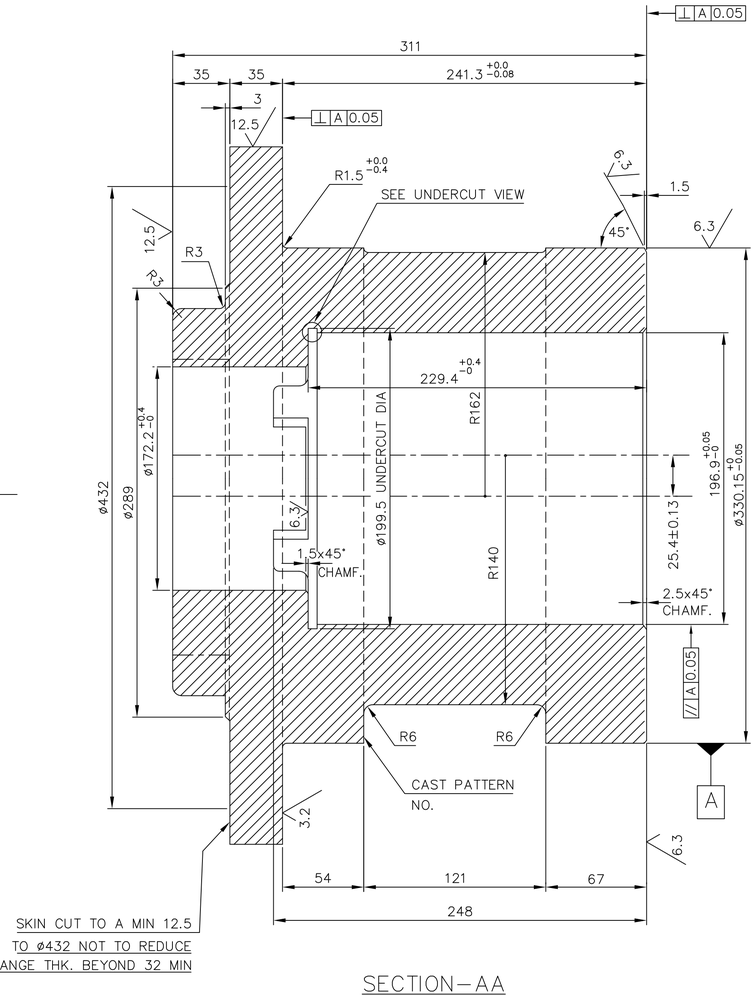

SECTION–AA

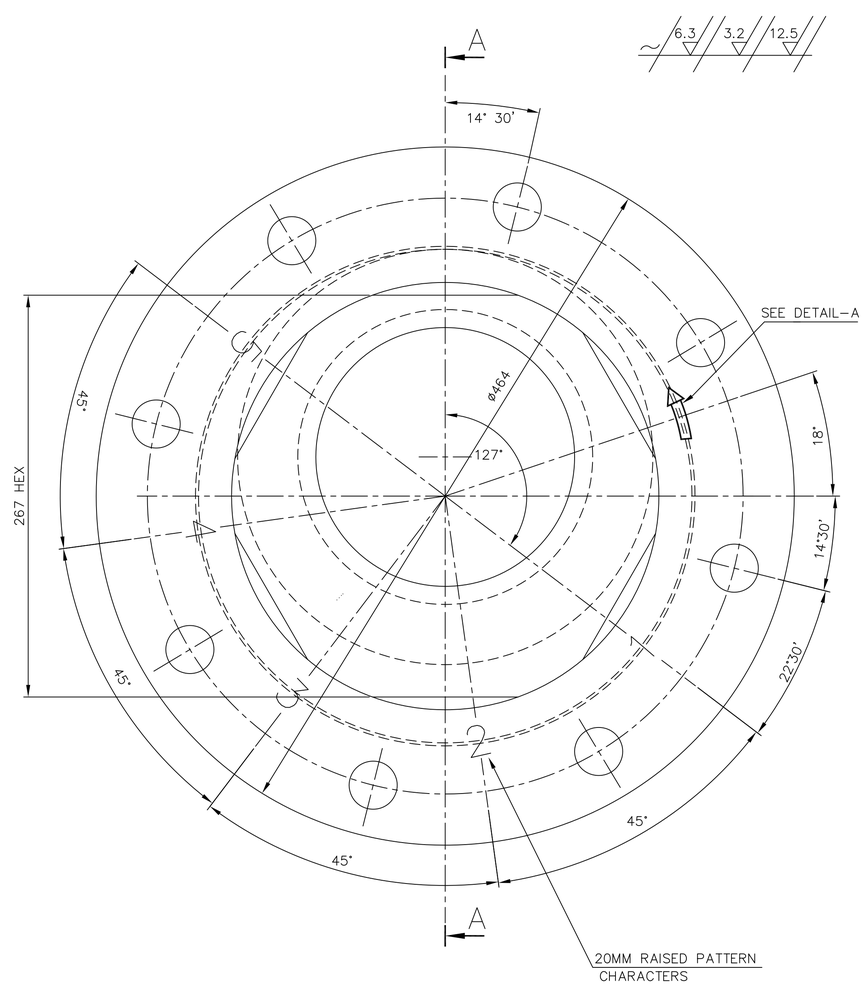

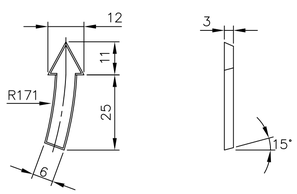

DETAIL–A

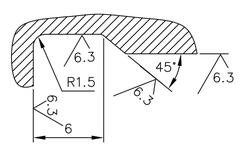

UNDERCUT VIEW

NOTES: –

1. THIS IS AFINISH MACHINED DRAWING. CASTING SHALL BE SUPPLIED IN STRESS RELLEIVED AND ROUGH MACHINED CONDTION WITH 5mm ALLOWANCE ON ALL MACHINED SURFACES.
2. BREAK ALL SHARP EDGES AND CORNERS UNLESS OTHERWISE NOTED.

ITEM NO	DESCRIPTION	DRAWING NO.	MATERIAL CODE / MATERIAL SPECN.	NET WT.	GROSS WT. / QUANTITY
01	CASTING		BA9110206574	120.00	
			AA19702	1	

THE FOLLOWING CONDITIONS APPLY EXCEPT OTHERWISE STATED...

1. REF.TO HY0230261 FOR UNSPECIFIED TOLERANCES.
2. CHAMFER M/CD SHARP EDGES 1.2 TO 1.0 AT 45°.
3. INTERNAL M/CD CORNER RADII 1 TO 0.7.
4. THE SURFACE ROUGHNESS WHEREVER NOT SHOWN SHALL BE TAKEN FROM THE SURFACE ROUGHNESS SHOWN OUT SIDE BACK SLASHES GIVEN AT THE TOP MOST RIGHT CORNER OF THE DRG.

TYPE OF PRODUCT OR NAME OF CUSTOMER/PROJECT: 883 XRP BOWL MILL

BHARAT HEAVY ELECTRICALS LTD. HYDERABAD

	NAME	SIGN.	DATE	NO.OF VAR.
DRN.	BSES		12.12.98	
CHD.	G.S.N.M.RAO		2.12.03	
APPD.				

DEPT. BMD	GRADE OF UNTOL. DIM.	SCALE	WEIGHT (KG)	REF. TO ASSY DRG.	ITEM NO.	NO.OF ITEMS
CODE 446	¢ / M / f	1:2	120.00	1.61.088.01022	10	24

TITLE: TRUNNION SHAFT END CAP–THRUST END

DRAWING NO. 1–61–088–01035 REV. 03

SHEET NO. 01 NO OF SHEETS 01

REV.	DATE	ALTERED / CHECKED	APPD.
03	12/12/98	ALTERED BSES / CHECKED G.S.N.M.RAO	

DRAWING REDRAWN ON AUTOCAD INCORPORATING ALL PREVIOUS REVISIONS

THE INFORMATION ON THIS DOCUMENT IS THE PROPERTY OF BHARAT HEAVY ELECTRICALS LIMITED.
IT MUST NOT BE USED DIRECTLY OR INDIRECTLY IN ANY WAY DETRIMENTAL TO THE INTEREST OF THE COMPANY

COMPUTER FILE NAME : 16101035.DWG
REF. DRG. NO. (D–94–145/4)
SIGN. AND DATE
INVENTORY NO

FIRST ANGLE PROJECTION

(ALL DIMENSIONS ARE IN mm)

DWG. NO. 1-61-176-00083

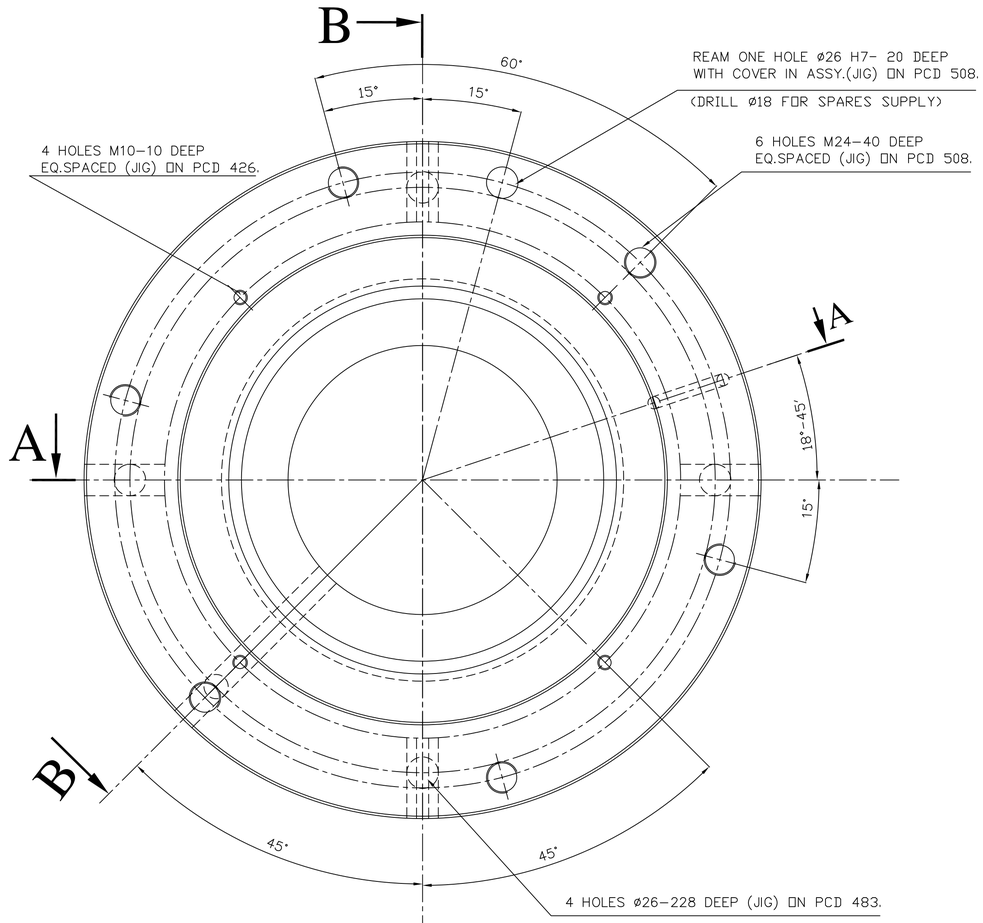

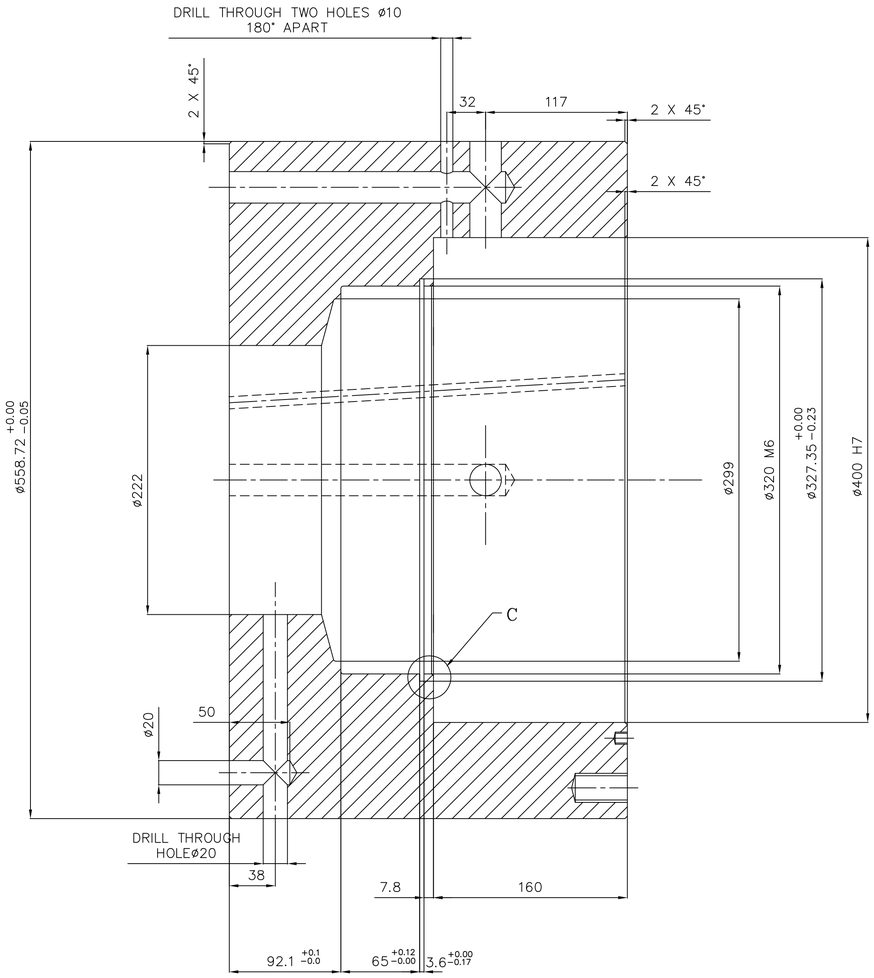

SECTION- BB

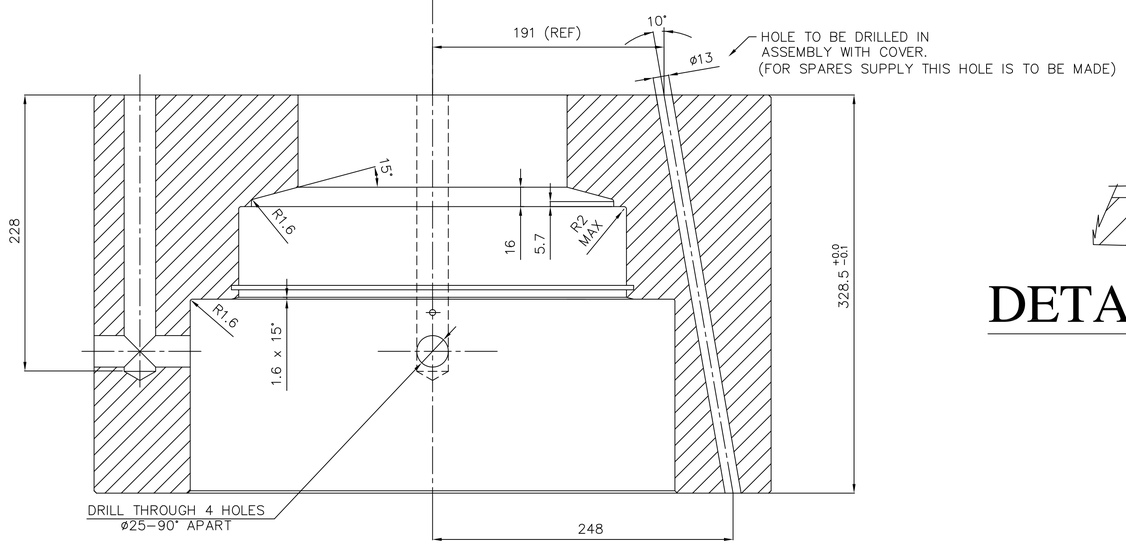

SECTION- AA

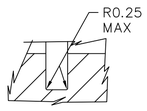

DETAIL-C

TOL SYMBOL	NOM SIZE	UPPER	LOWER
		LIMITS	
M6	ø320	−0.010	−0.046
H7	ø26	+0.021	+0.000
H7	ø400	+0.057	+0.000

ITEM NO.	DESCRIPTION	DRAWING NO.	VAR. NO.	RAW MATERIAL SIZE OR CASTING DRG. NO. OR FORGING DRG. NO.	MATERIAL CODE / MATERIAL SPECN.	NET WT.	GROSS WT. / QUANTITY
	CASTING				BA9110321098		388
					AA19703		1

THE FOLLOWING CONDITIONS APPLY EXCEPT OTHERWISE STATED.

1. REF. TO HY0230261 FOR UNSPECIFIED TOLERANCES.
2. CHAMFER M/CD. SHARP EDGES 1.2 TO 1.0 AT 45°.
3. INTERNAL M/CD. CORNER RADII 1 TO 0.7
4. THE SURFACE ROUGHNESS WHERE-EVER NOT SHOWN SHALL BE TAKEN FROM THE SURFACE ROUGHNESS SHOWN OUT SIDE THE BACK SLASH GIVEN OR THE TOP MOST RIGHT CORNER OF THE DRG.

TYPE OF PRODUCT

NAME OF CUSTOMER/PROJECT

BHARAT HEAVY ELECTRICALS LIMITED
HYDERABAD

	NAME	SIGN.	DATE	NO.OF VAR.
DRN.	E.M.ASHOK		16.03.04	
CHD.	AMAN		16.03.04	
APPD.	S.G		16.03.04	

DEPT.	UNTOL. DIMS. GR.	SCALE	WEIGHT (KG)	REF. TO ASSY DRG.	ITEM NO.	NO.OF ITEMS
446	¢/M/A	2:5	388.00	0-61-180-00625		

CODE PULV.

TITLE: LOWER BEARING AND PUMP HOUSING

CARD CODE

DRAWING NO. 1-61-176-00083 — REV. 04

SHEET NO. — NO OF SHEETS

REV.	DATE	ALTERED	CHD./APPD.	ZONE
04	6.3.04	E.M.ASHOK	CHD./APPD. AMAN/SG	

DRG REDRAWN IN AUTOCAD NOTE FOR ø13 HOLE TO BE DONE IN ASSEMBLYL ADDED.

THE INFORMATION ON THIS DOCUMENT IS THE PROPERTY OF BHARAT HEAVY ELECTRICALS LIMITED.
IT MUST NOT BE USED DIRECTLY OR INDIRECTLY IN ANY WAY DETRIMENTAL TO THE INTEREST OF THE COMPANY

COMPUTER FILE NAME 16100083

INVENTORY NO SIGN. AND DATE REF. DRG. NO.

FIRST ANGLE PROJECTION

(ALL DIMENSIONS ARE IN mm)

DRG. NO. 1-61-376-00019

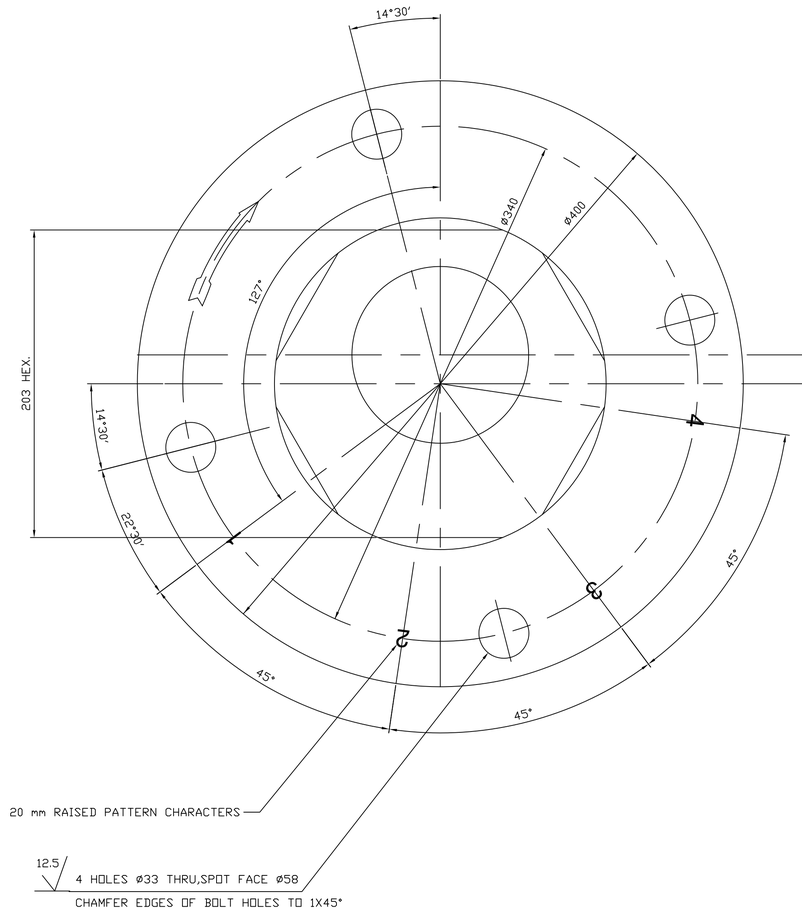

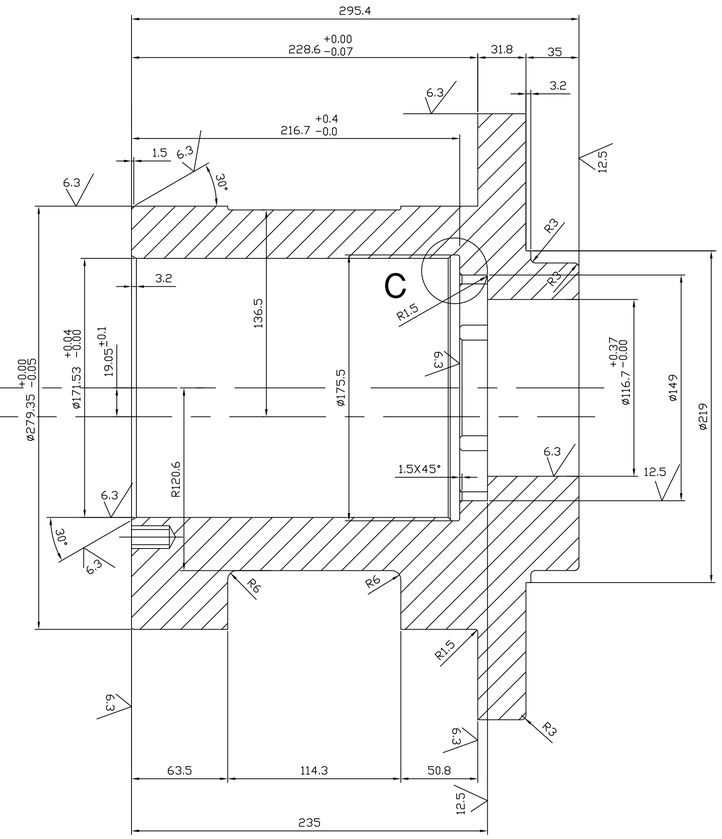

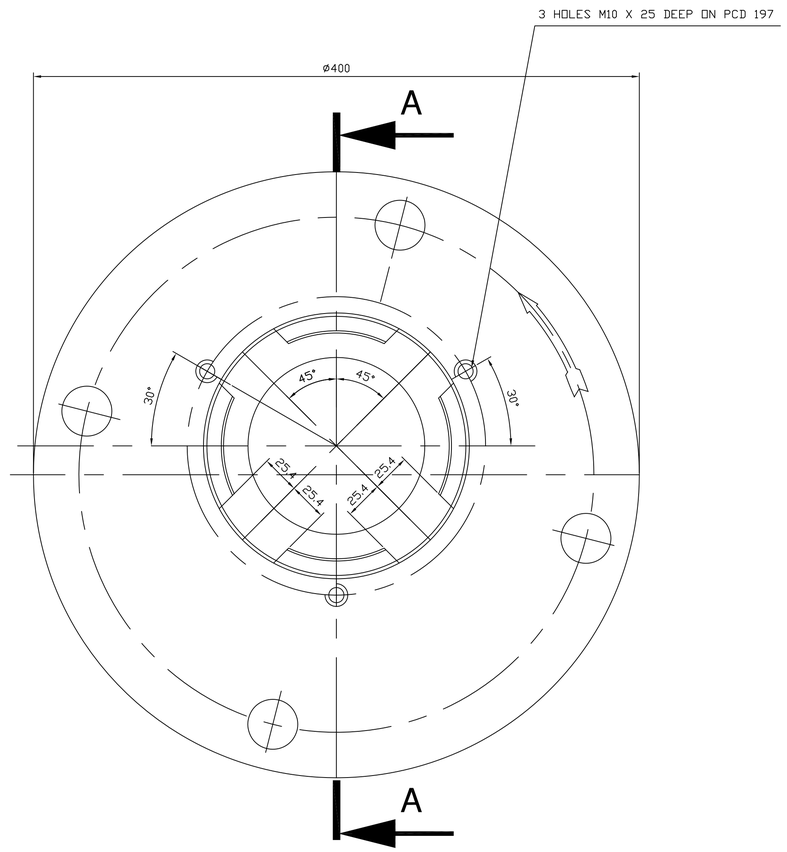

SECTION-AA

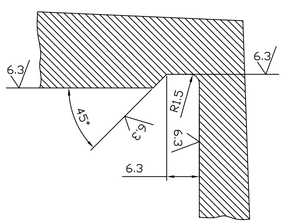

DETAIL C

ITEM NO.	DESCRIPTION	DRAWING NO.	VAR. NO.	RAW MATERIAL SIZE OR CASTING DRG. NO. OR FORGING DRG. NO.	MATERIAL CODE	NET WT.	GROSS WT.
	CASTING				BA9110307036	81.00	
					AA19703		
					MATERIAL SPECN.	QUANTITY	

THE FOLLOWING CONDITIONS APPLY EXCEPT OTHERWISE STATED.

1. REF. TO HY0230261 FOR UNSPECIFIED TOLERANCES.
2. CHAMFER M/CD. SHARP EDGES 1.2 TO 1.0 AT 45°.
3. INTERNAL M/CD. CORNER RADII 1 TO 0.7
4. THE SURFACE ROUGHNESS WHERE-EVER NOT SHOWN SHALL BE TAKEN FROM THE SURFACE ROUGHNESS SHOWN OUT SIDE THE BACK SLASH GIVEN OR THE TOP MOST RIGHT CORNER OF THE DRG.

TYPE OF PRODUCT
NAME OF CUSTOMER/PROJECT — 803 XRP

BHARAT HEAVY ELECTRICALS LIMITED
HYDERABAD

	NAME	SIGN.	DATE	NO.OF VAR.
DRN.	E.M.ASHOK		2-6-2K	
CHD.	N.D.S		2-6-2K	
APPD.	K.M.RAO		2-6-2K	

DEPT.	UNTOL. DIMS. GR.	SCALE	WEIGHT (KG)	REF. TO ASSY DRG.	ITEM NO.	NO.OF ITEMS
446	¢/M/¢	1:2 &2:1	81.00	0-61-076-00022		
CODE PULV.						

TITLE: TRUNNION SHAFT END CAP (FREE END)

CARD CODE

DRAWING NO. 1-61-376-00019 — REV. 04

SHEET NO. — NO OF SHEETS

REV.	DATE	ALTERED	CHD./APPD.	ZONE
04	3.6.2K	E.M.ASHOK	N.D.S	

DRAWING REDRAWNBY INCORPORATING ALL PREVIOUS REVISIONS.

THE INFORMATION ON THIS DOCUMENT IS THE PROPERTY OF BHARAT HEAVY ELECTRICALS LIMITED.
IT MUST NOT BE USED DIRECTLY OR INDIRECTLY IN ANY WAY DETRIMENTAL TO THE INTEREST OF THE COMPANY

COMPUTER FILE NAME 16100019

INVENTORY NO | SIGN. AND DATE | REF. DRG. NO.

FIRST ANGLE PROJECTION

(ALL DIMENSIONS ARE IN mm)

DRG. NO. 1-61576-00029 SH. 01 OF 01

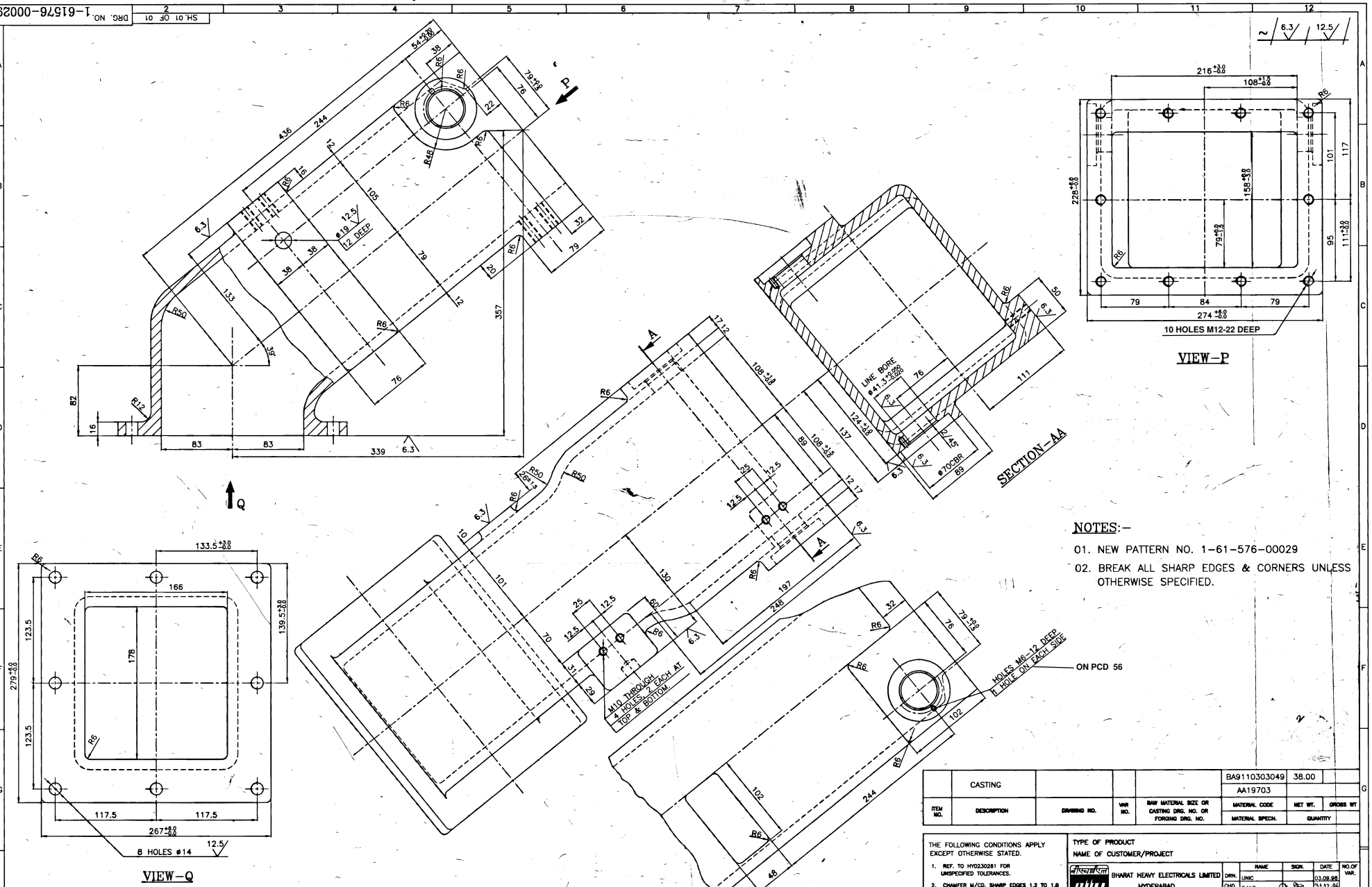

NOTES:-

01. NEW PATTERN NO. 1-61-576-00029

02. BREAK ALL SHARP EDGES & CORNERS UNLESS OTHERWISE SPECIFIED.

ITEM NO.	DESCRIPTION	DRAWING NO.	VAR NO.	RAW MATERIAL SIZE OR CASTING DRG. NO. OR FORGING DRG. NO.	MATERIAL CODE / MATERIAL SPECN.	NET WT. / QUANTITY	GROSS WT
	CASTING				BA9110303049 / AA19703	38.00	

THE FOLLOWING CONDITIONS APPLY EXCEPT OTHERWISE STATED.

1. REF. TO HY0230261 FOR UNSPECIFIED TOLERANCES.
2. CHAMFER M/CD. SHARP EDGES 1.2 TO 1.0 AT 45°
3. INTERNAL M/CD. CORNER RADII 1 TO 0.7
4. THE SURFACE ROUGHNESS WHERE-EVER NOT SHOWN SHALL BE TAKEN FROM THE SURFACE ROUGHNESS SHOWN OUT SIDE THE BACK BLASH GIVEN OR THE TOP MOST RIGHT CORNER OF THE DRG.

TYPE OF PRODUCT

NAME OF CUSTOMER/PROJECT

BHARAT HEAVY ELECTRICALS LIMITED HYDERABAD

	NAME	SIGN.	DATE
DRN.	UNIC		03.09.96
CHD.	B.M.R		31.12.96
APPD.	S.RAMANNA		31.12.96

DEPT. PULV ENGG. CODE 445 | UNTOL. DIMS. GR. E/M/F | SCALE 1:2 | WEIGHT (KG) 38.00 | REF. TO ASSY DRG. — | ITEM NO. | NO. OF ITEMS

TITLE: TRAMP IRON SPOUT BODY

CARD CODE | DRAWING NO. 1-61-576-00029 | REV. 03

SHEET NO. 01 | NO OF SHEETS 01

REV.	DATE	ALTERED	APPD.
		CHD.	

REV.	DATE	ALTERED	APPD.
	03.12.06	CHD. V.Kumar	

10 HOLE M12 WAS M22

REV.	DATE	ALTERED	APPD.
02	03.09.96	CHD. UNIC	

DRAWING REDRAWN BY INCORPORATING THE PREVIOUS REVISION

THE INFORMATION ON THIS DOCUMENT IS THE PROPERTY OF BHARAT HEAVY ELECTRICALS LIMITED. IT MUST NOT BE USED DIRECTLY OR INDIRECTLY IN ANY WAY DETRIMENTAL TO THE INTEREST OF THE COMPANY

COMPUTER FILE NAME 1610029.DWG | REF. DRG. NO. | SIGN. AND DATE | INVENTORY NO

FIRST ANGLE PROJECTION

(ALL DIMENSIONS ARE IN mm)

DJC

DRG.NO. 2-61-100-00566

SECTION A-A

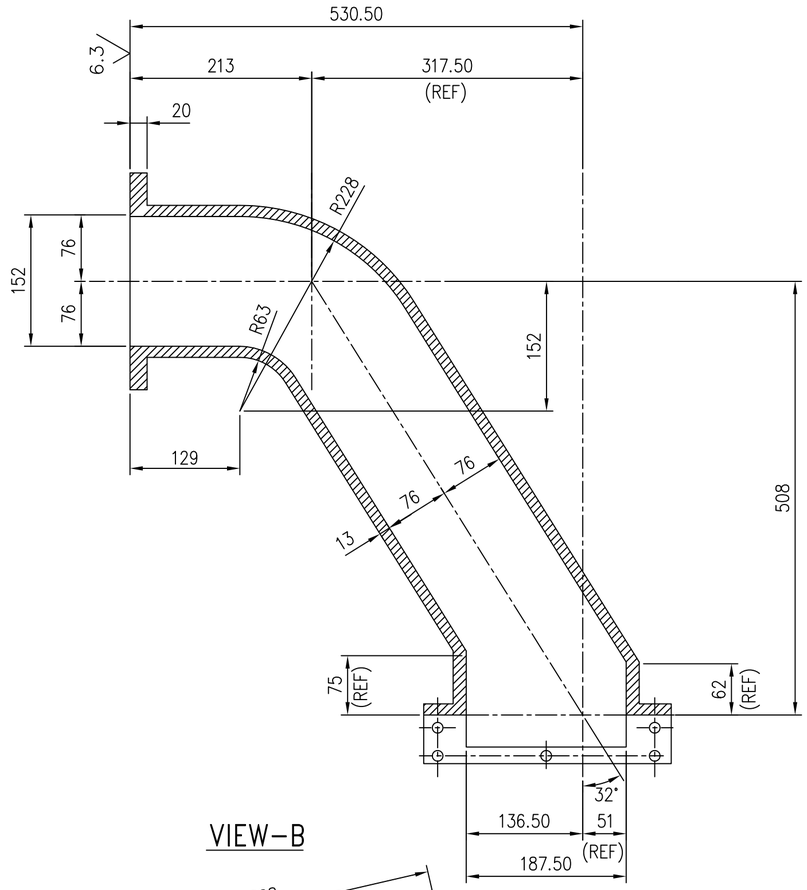

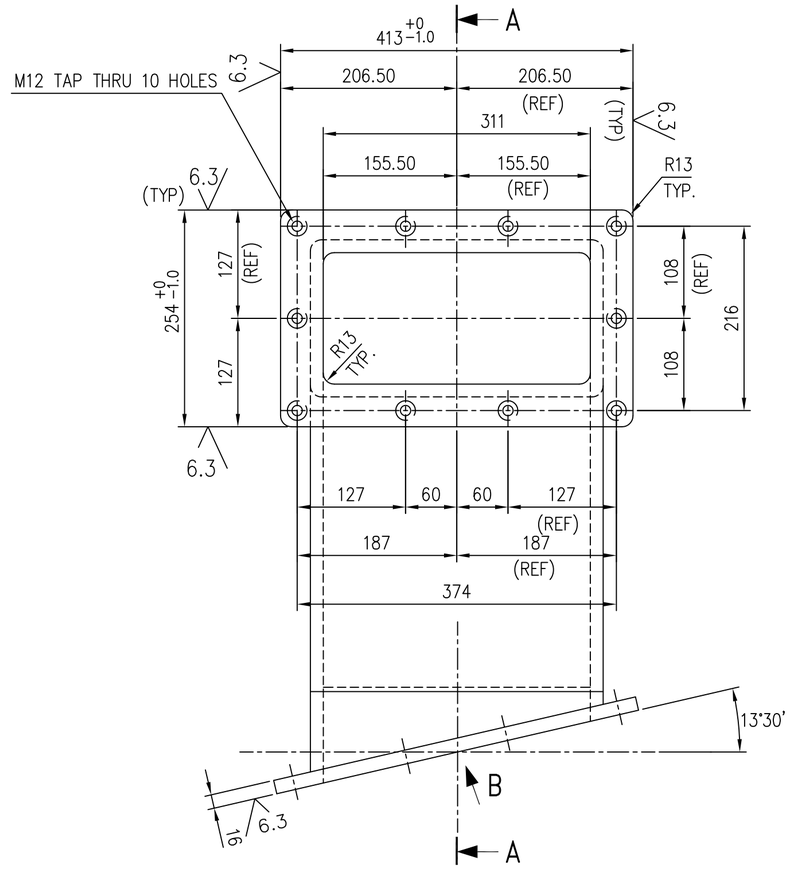

VIEW-B

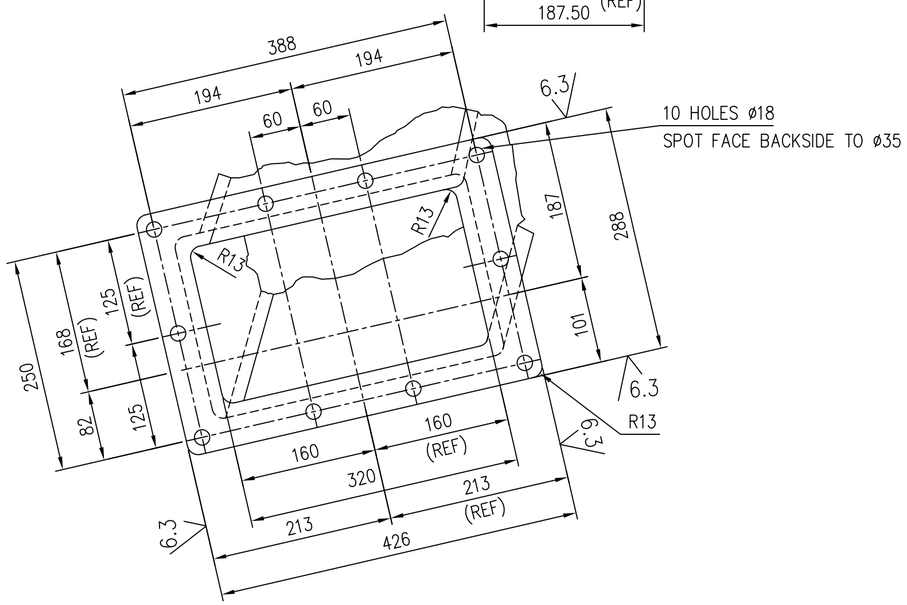

NOTES:

1. ALL FILLETS AND RADII TO BE 6mm UNLESS OTHERWISE SPECIFIED.

ITEM NO	DESCRIPTION	DRAWING NO.	VAR. NO.	RAW MATERIAL SIZE OR CASTING DRG.NO. OR FORGING DRG.NO.	MATERIAL CODE / MATERIAL SPECN.	UNIT WT. / QUANTITY
	CASTING	2-61-196-00224			BA9110303006 / AA19703	99.20

THE FOLLOWING CONDITIONS APPLY EXCEPT OTHERWISE STATED...

1. REF.TO HY0230261 FOR UNSPECIFIED TOLERANCES.
2. CHAMFER M/CD SHARP EDGES 1.2 TO 1.0 AT 45°.
3. INTERNAL M/CD CORNER RADII 1 TO 0.7.
4. THE SURFACE ROUGHNESS WHEREVER NOT SHOWN SHALL BE TAKEN FROM THE SURFACE ROUGHNESS SHOWN OUT SIDE BACK SLASHES GIVEN AT THE TOP MOST RIGHT CORNER OF THE DRG.

TYPE OF PRODUCT OR NAME OF CUSTOMER/PROJECT: 1003 XRP BOWL MILL

BHARAT HEAVY ELECTRICALS LTD. HYDERABAD

	NAME	SIGN.	DATE	NO.OF VAR.
DRN.	E.M.ASHOK		10.12.98	–
CHD.	N.D.S		14.12.98	
APPD.	S.G		15.12.98	

DEPT.	GRADE OF TOL. DIM.	SCALE	WEIGHT(Kg)	REF. TO ASSY DRG.	ITEM No.	NO.OF ITEMS
PULV. ENGG. CODE 446	¢/M/f	1:5	99.20	2-61-196-00224	28	–

TITLE: TRAMP IRON SPOUT BODY

DRAWING No.. 2-61-100-00566 REV. 05

SHEET No. 1 No. OF SHEETS 1

REV.	DATE	ALTERED / CHECKED	APPD.	ZONE
05	06.03.03	ALTERED E.M.ASHOK, CHECKED NDS	APPD S.G	MACHINING ADDED ON DIMS.426 AND 288.
04	12.11.01	ALTERED E.M.ASHOK, CHECKED NDS	APPD. S.G	TOLERANCE +0/−1.0 ADDED ON DIMS. 413 & 254.
03	17.12.98	ALTERED, CHECKED	APPD.	DRAWING REDRAWN ON CAD INCORPORATING ALL THE PREVIOUS REVISIONS.

THE INFORMATION ON THIS DOCUMENT IS THE PROPERTY OF BHARAT HEAVY ELECTRICALS LIMITED. IT MUST NOT BE USED DIRECTLY OR INDIRECTLY IN ANY WAY DETRIMENTAL TO THE INTEREST OF THE COMPANY.

COMP. FILE NAME 26100566.DWG

REF.DRG.NO.

INVENTORY NO.

TD-150/REV.NO.03 SIZE A2

FIRST ANGLE PROJECTION

(ALL DIMENSIONS ARE IN mm)

DRG. NO. 2-61-176-00001

THE INFORMATION ON THIS DOCUMENT IS THE PROPERTY OF BHARAT HEAVY ELECTRICALS LIMITED.
IT MUST NOT BE USED DIRECTLY OR INDIRECTLY IN ANY DETRIMENTAL TO THE INTEREST OF THE COMPANY

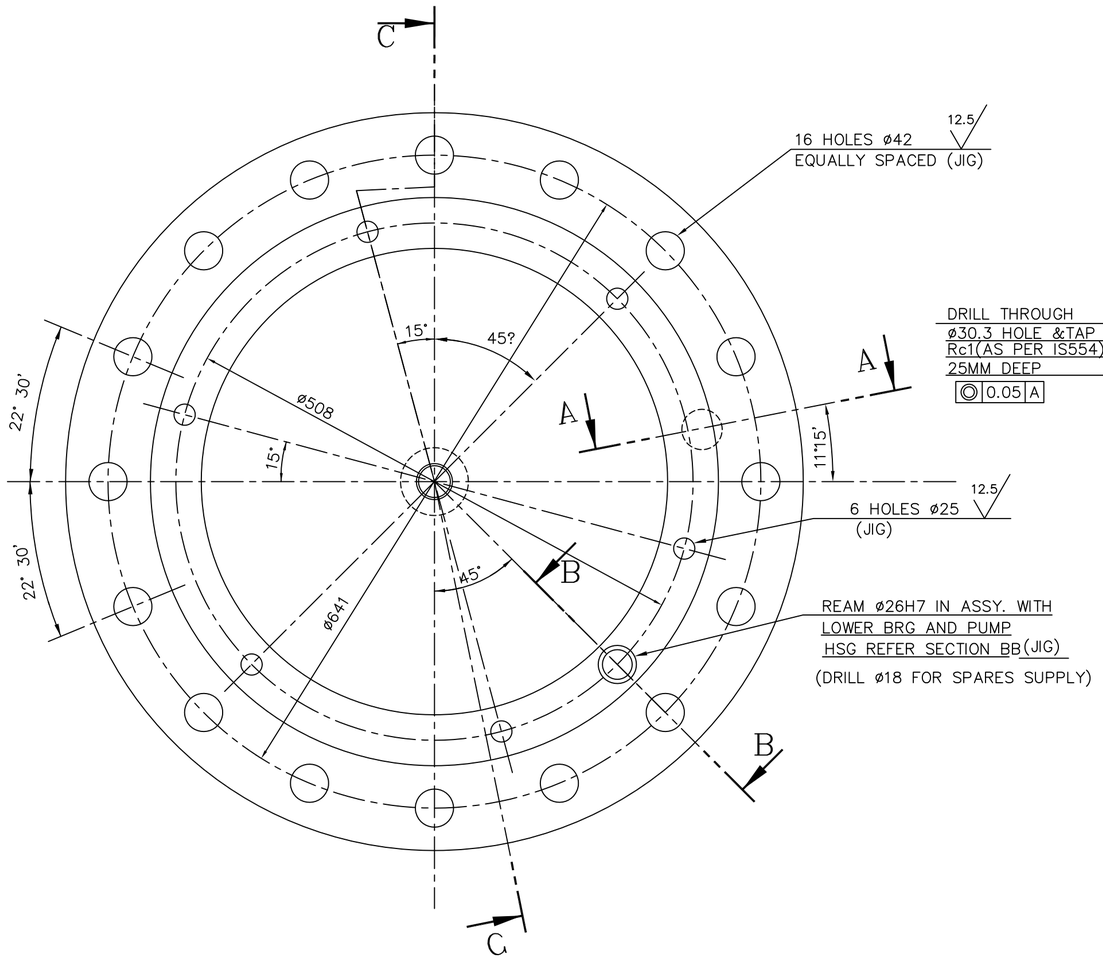

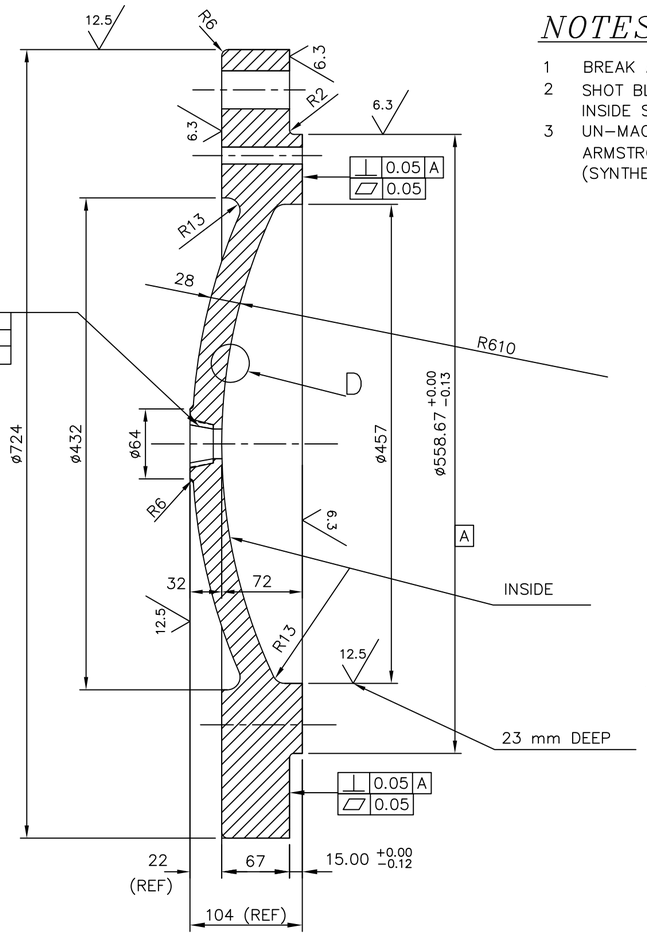

SECTION C–C

NOTES:–

1. BREAK ALL SHARP EDGES.
2. SHOT BLAST ALL SURFACES AT FOUNDRY.
   INSIDE SURFACES MUST BE 100% FREE FROM SCALE AND SAND
3. UN–MACHINED INSIDE SURFACES TO BE COATED WITH
   ARMSTRONG WHITE CRANK CASE SEALER
   (SYNTHETIC CASTING SEALER)

12.5 6.3 3.2

GENERAL DIMENSIONS, LIMITS, FITS & TOLERANCES AS PER PS. HY 0230261

07

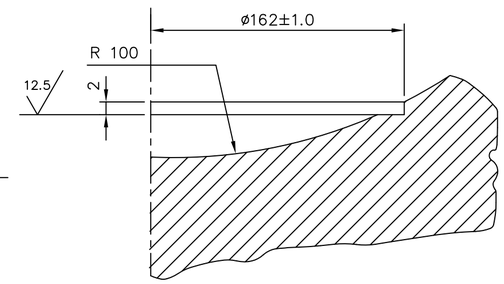

DETAIL–D

06

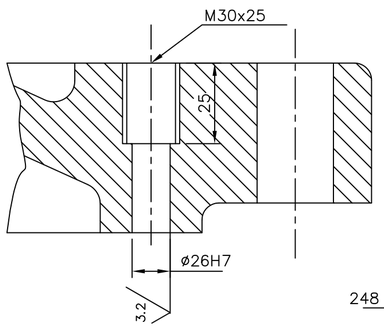

SECTION B–B

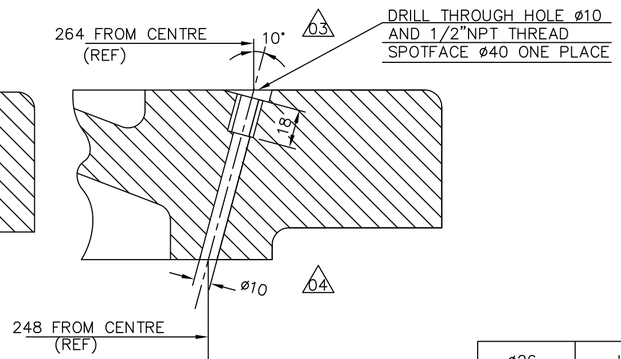

SECTION A–A

CASTING	01		PATTERN No. (20–F–002–062) M–67–047		BA9110306099			125,500		
					BA 19703			1		
DESCRIPTION	ITEM NO.	STD	DRAWING No.		MATERIAL CODE	A C	COMP GROUP	UNIT WEIGHT (Kg)	GNSI	CI	ZONE
					MATERIAL SPECN			QUANTITY			

CARD TYPE–1

ø26	H7	+0.021	−0.000
NOM DIMENSION	TOLERANCE SYMBOL	UPPER	LOWER
		LIMITS	

REV.	DATE	ALTERED
		CHECKED
		APPROVED
ZONE		

TYPE OF PRODUCT OR NAME OF CUSTOMER/PROJECT: 763 XRP BOWL MILL

BHARAT HEAVY ELECTRICALS LTD. HYDERABAD

	NAME	SIGN.	DATE	NO.OF VAR.
DRN.	J.D.C		19–1–79	
CHD.	NDS		20–1–79	
APPD.	S GHATGE		20–1–79	

DEPT. B.M	UNTOL.DIMS.GR.	SCALE	WEIGHT (KG)	REF. TO ASSY DRG.	ITEM NO.	NO.OF ITEM
CODE 446	ℓ/M/P	N.T.S	125.50	1–61–180–90027	6	

TITLE: LOWER BEARING AND PUMP HOUSING COVER

CARD CODE

DRAWING NO. 2–61–176–00001 REV. 09

SHEET NO. 1 NO OF SHEETS 1

REV.	DATE	ALTERED	ZONE	
09	16.08.06	ALTERED CNY CHECKED ERR	ZONE	GEOMETRICAL TOLERANCES ADDED
08	01–07–94	ALTERED CHECKED	ZONE	DRAWING REDRAWN
07	30–7–87	ALTERED CHECKED	ZONE	E3 E1 MACHINING DETAIL – D ADDED TO ACCOMMODATE LIFTING SPACER
06	26–3–84	ALTERED CHECKED	ZONE	5–C 3–F 5–3 RC1 WAS P 1" TR NOTE–3 ALTERED MAT. CODE CHANGED DRILL DIA 10 WAS ø7.5

APPROVED GK

COMP. FILE NAME 00001.DWG

REF. DRG. NO.

SIGN. AND DATE

INVENTORY NO

FIRST ANGLE PROJECTION

(ALL DIMENSIONS ARE IN mm)

DRG. NO. 2-61-176-00006

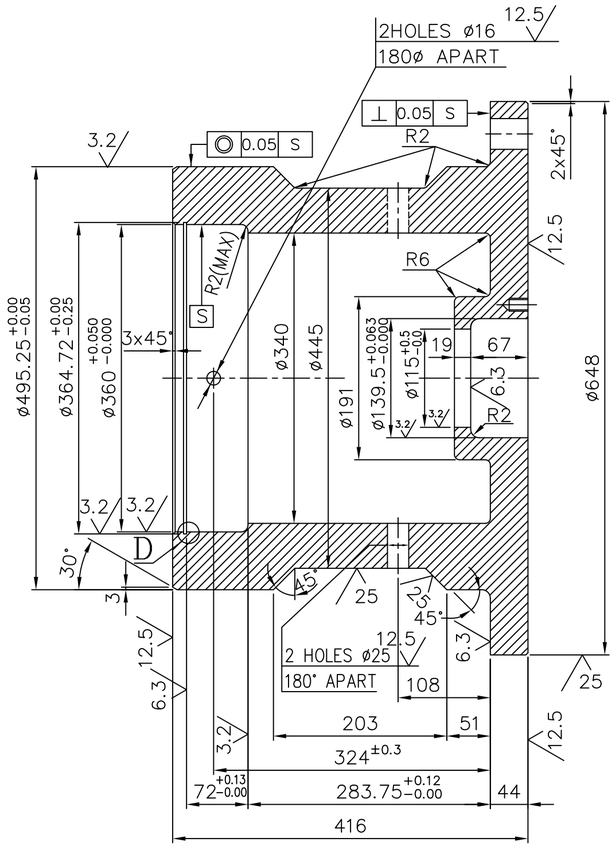

SECTION–AA

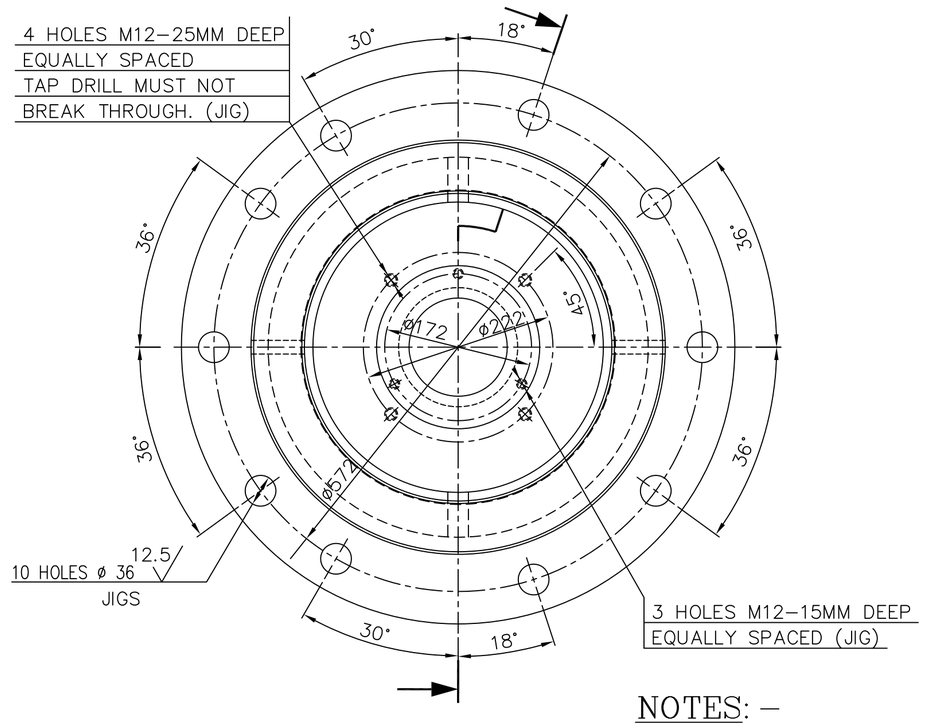

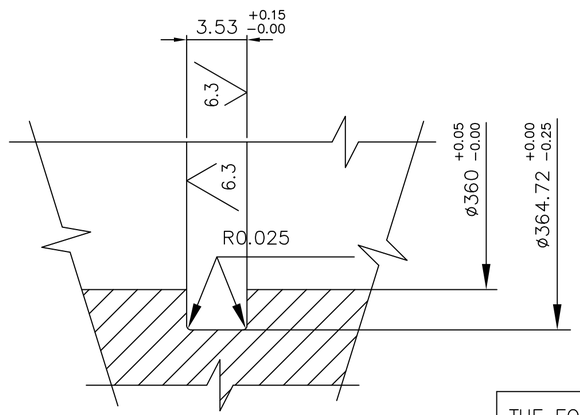

DETAIL–D

NOTES: –

1. REMOVE ALL SHARP EDGES
2. SHOT BLAST ALL SURFACES AT FOUNDARY. INSIDE SURFACES MUST BE 100% FREE FROM SCALE & SAND. ALL INSIDE UNMACHINED SURFACES MUST BE COATED WITH ARM STRONG WHITE CRANK CASE SEALER(SYNTHETIC CASTING SEALER) OTHER SURFACE ARE TO BE PAINTED WITH RED OXIDE PAINT..

ITEM NO.	DESCRIPTION	DRAWING NO.	MATL CODE / MATL SPECN	UNIT WT. / QTY
01	CASTING		BA9110321110 / AA19703	378.0 / 1

THE FOLLOWING CONDITIONS APPLY EXCEPT OTHERWISE STATED.

1. REFER TO HY0230261 FOR UNSPECIFIED TOLERANCES.
2. CHAMFER MACHINED SHARP EDGES 1.2 TO 1.0 AT 45°
3. INTERNAL MACHINE RADII 1 TO 0.7
4. THE SURFACE ROUGHNESS WHERE–EVER NOT SHOWN SHALL BE TAKEN FROM THE SURFACE ROUGHNESS SHOWN OUT SIDE THE BACKSLASH GIVEN AT THE TOP MOST RIGHT CORNER OF THE DRAWING.

TYPE OF PRODUCT OR NAME OF CUSTOMER/PROJECT: 763, 783, 803 ,963, 983 & 1003

BHARAT HEAVY ELECTRICALS LIMITED
HYDERABAD

	NAME	SIGN.	DATE	NO.OF VAR.
DRN.	ACS/PAVAN		06.12.96	01
CHD.	P.V.RAO		06.12.96	
APPD.	G.KISTAIAH		06.12.96	

DEPT.	GRADE OF TOL.DIM.	SCALE	WEIGHT (KG)	REF. TO ASSY DRG.	ITEM NO.	NO.OF ITEMS
PULV–ENGG CODE 4460	E/M/P	1 : 5	378.00	–––––––––––	––	––

TITLE: RADIAL BEARING HOUSING

CARD CODE

DRAWING NO. 2–61–176–00006 REV. 09

SHEET NO. 01 NO OF SHEETS 01

REV.	DATE	ALTERED	CHECKED	APPROVED
09	06.12.96			

ZONE

DRAWING REDRAWN INCORPORATING ALL PREVIOUS ALL PREVOIUS REVISIONS.

THE INFORMATION ON THIS DOCUMENT IS THE PROPERTY OF BHARAT HEAVY ELECTRICALS LIMITED. IT MUST NOT BE USED DIRECTLY OR INDIRECTLY IN ANY WAY DETRIMENTAL TO THE INTEREST OF THE COMPANY

INVENTORY NO | SIGN. AND DATE | REF. DRG. NO. 261006.DWG/1135

FIRST ANGLE PROJECTION

(ALL DIMENSIONS ARE IN mm)

MES

DRG. NO. 2-61-176-00022

SH. 1 OF 1

THE INFORMATION ON THIS DOCUMENT IS THE PROPERTY OF BHARAT HEAVY ELECTRICALS LIMITED. IT MUST NOT BE USED DIRECTLY OR INDIRECTLY IN ANY WAY DETRIMENTAL TO THE INTEREST OF THE COMPANY

COMPUTER FILE NAME 2610022.DWG

REF. DRG. NO.

SIGN. AND DATE

INVENTORY NO

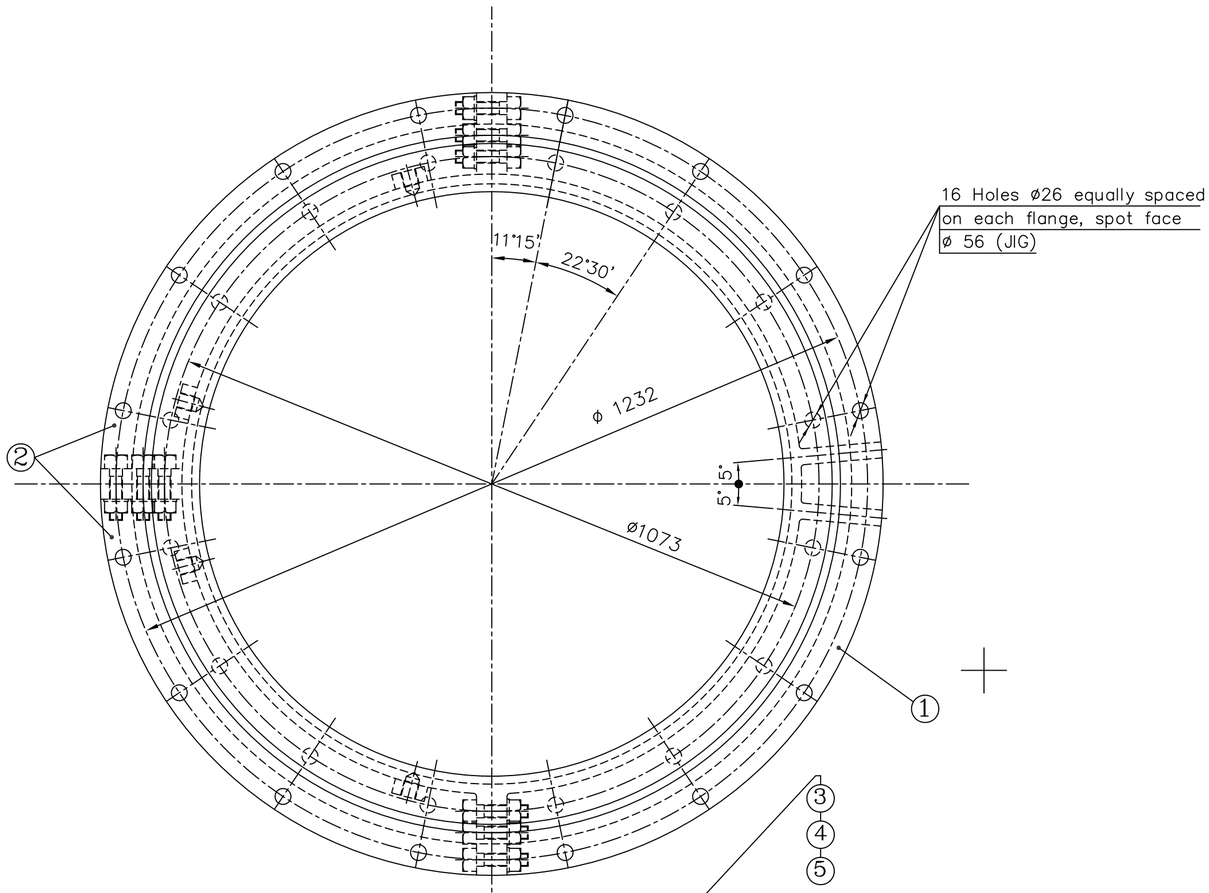

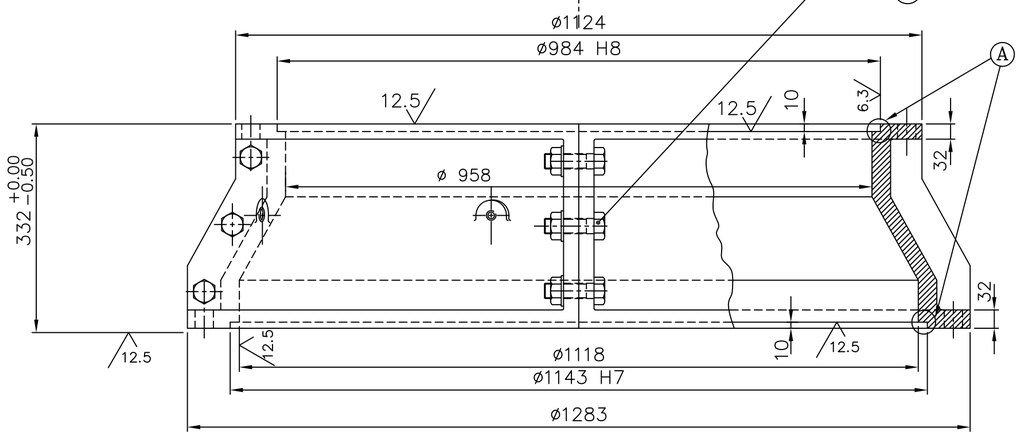

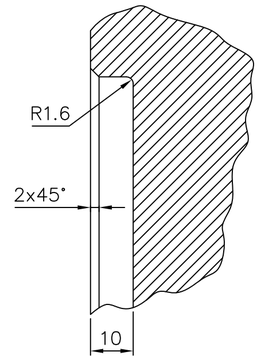

DETAIL– A

SCALE 1:1

6.3 12.5

H8	ø984	+0.140	−0.000
H7	ø1143	+0.105	+0.000
Tolerance Symbol	NOM. SIZE	UPPER	LOWER
		LIMITS	

NOTE: –

Break all sharp edges and corners unless otherwise shown.

ITEM NO	DESCRIPTION	STD	DRAWING NO.	MATERIAL CODE / MATERIAL SPEC.	A C	COMP. GROUP	UNIT / QTY.
05	SPRING WASHER M24	S		AA7164002100			0.03
				AA7164002			9
04	HEX NUT M24	S		HY7151115989			0.11
				AA7151115			9
03	HEX BOLT M24x80	S		HY7111124898			0.40
				AA7111124			9
02	UPPER SKIRT SEGMENT		2-61-176-00024	BA9110353046			85.00
				AA19703			2
01	UPPER SKIRT SEGMENT		2-61-176-00023	BA9110353038			170.00
				AA19703			1

THE FOLLOWING CONDITIONS APPLY EXCEPT OTHERWISE STATED.

1. REF. TO HY0230261 FOR UNSPECIFIED TOLERANCES.
2. CHAMFER M/CD. SHARP EDGES 1.2 TO 1.0 AT 45°
3. INTERNAL M/CD. CORNER RADII 1 TO 0.7
4. THE SURFACE ROUGHNESS WHERE-EVER NOT SHOWN SHALL BE TAKEN FROM THE SURFACE ROUGHNESS SHOWN OUT SIDE THE BACK SLASH GIVEN ON THE TOP MOST RIGHT CORNER OF THE DRG.

REV.	DATE	ALTERED
05	26.07.98	CHD/APPD
ZONE		DRG. REDRAWN INCORPORATING ALL PREVIOUS REVISIONS

TYPE OF PRODUCT OR NAME OF CUSTOMER/PROJECT: 76" BOWL MILL

BHARAT HEAVY ELECTRICALS LIMITED HYDERABAD

	NAME	SIGN.	DATE
DRN.			26.07.98
CHD.	NDS		26.07.98
APPD.	S GHATGE		26.07.98

DEPT.	UNTOL. DIMS.		SCALE	WEIGHT (KG)	REF. TO ASSY. DRG.	ITEM NO.	NO.OF ITEMS
BMD DEPT CODE. 446	GR. ℄/M/F		1:7, 1:1	344.88	1-61-180-90027	90	

TITLE: UPPER SKIRT ASSEMBLY

DRAWING NO. 2-61-176-00022 REV. 05

SHT. No 01 NO. OF SHT. 01

FIRST ANGLE PROJECTION

(ALL DIMENSIONS ARE IN mm)

DRG. NO.2-61-180-90077

THE INFORMATION ON THIS DOCUMENT IS THE PROPERTY OF BHARAT HEAVY ELECTRICALS LIMITED. IT MUST NOT BE USED DIRECTLY OR INDIRECTLY IN ANY WAY DETRIMENTAL TO THE INTEREST OF THE COMPANY

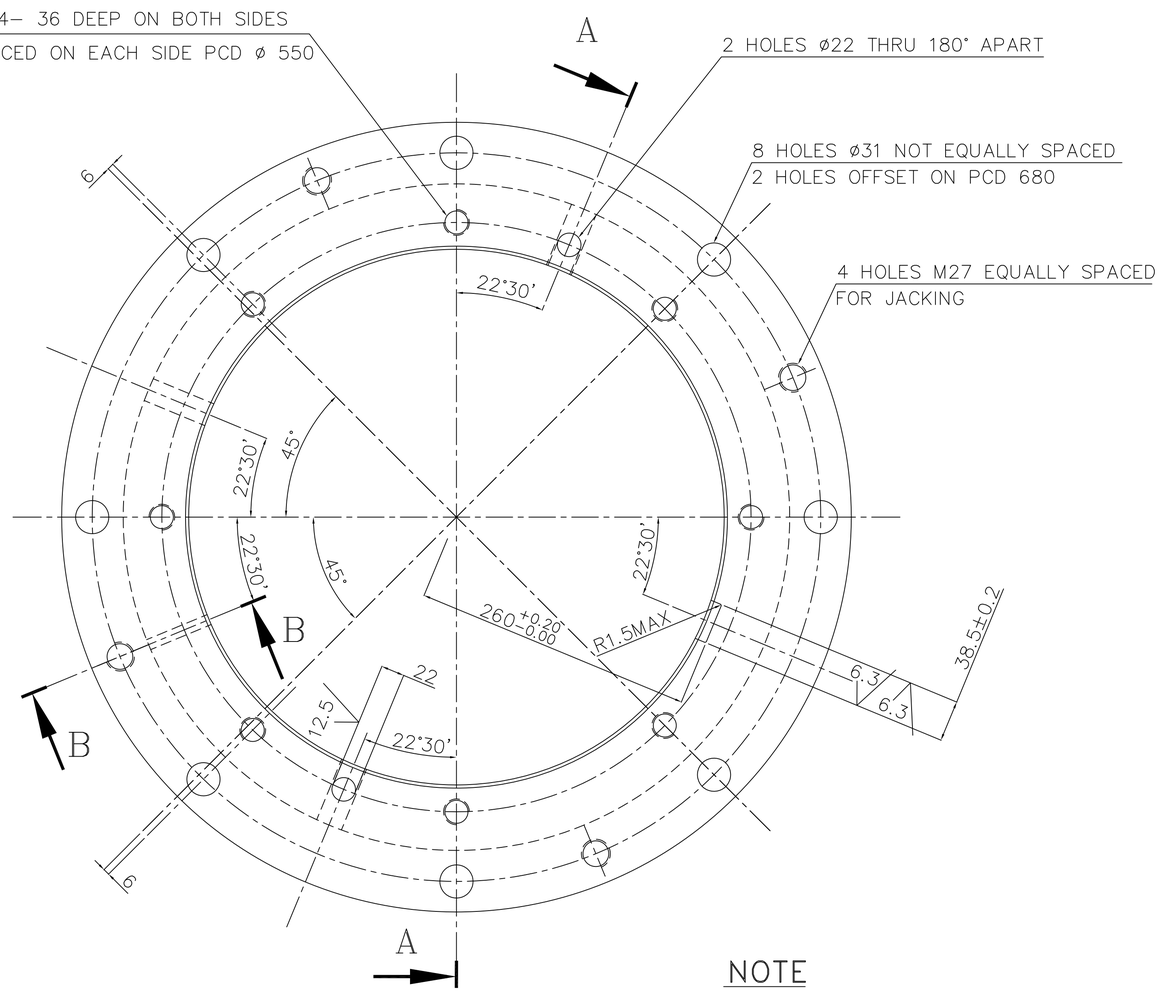

NOTE

1. BREAK ALL SHARP EDGES
2. HYD PATTERN NO. M-67-056

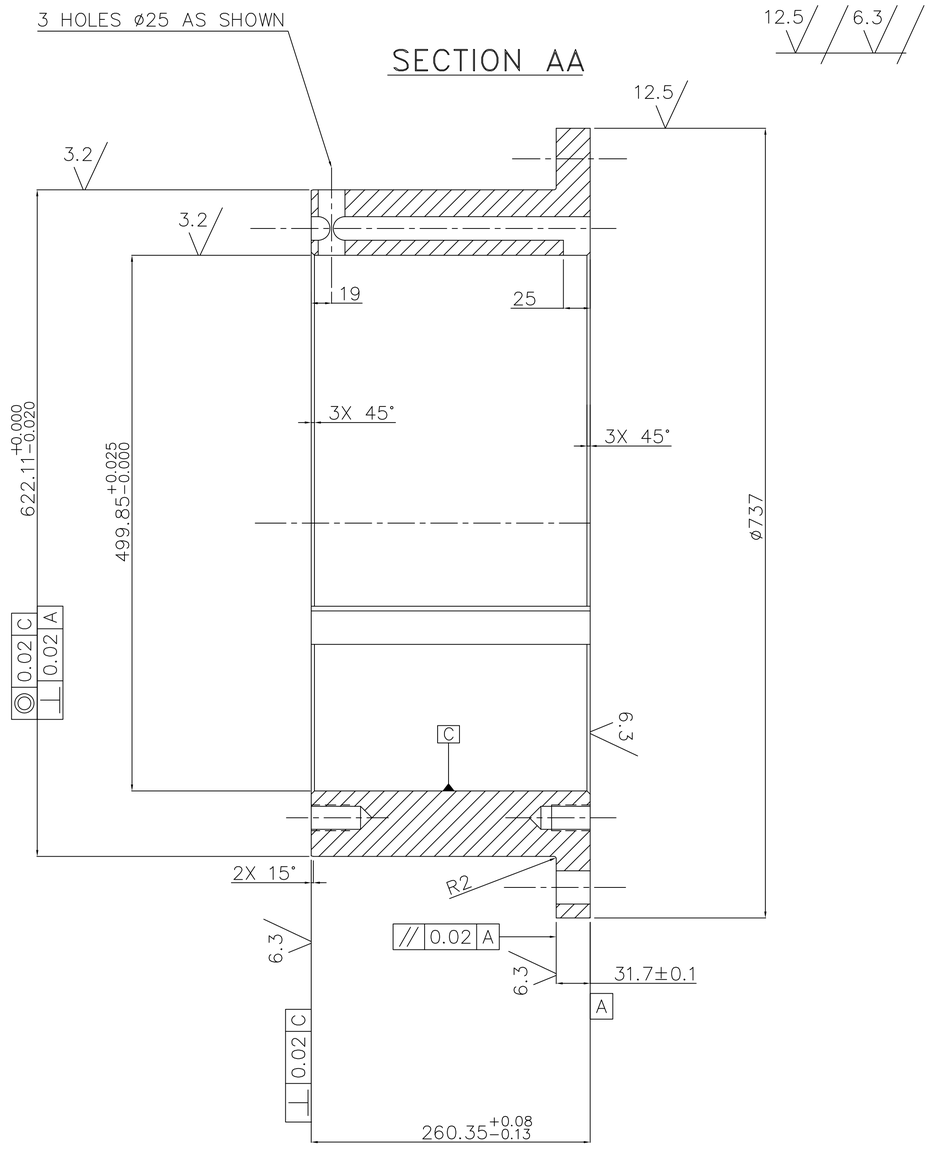

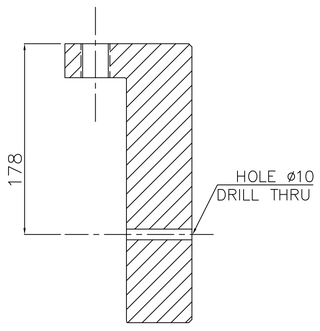

SECTION BB
(ONE PLACE)

ITEM NO.	DESCRIPTION	DRAWING NO.	VAR. NO.	RAW MATERIAL SIZE OR CASTING DRG. NO. OR FORGING DRG. NO.	MATERIAL CODE	NET WT.	GROSS WT.
					BA9110321128	249.40	
					AA 19703		
					MATERIAL SPECN.	QUANTITY	

THE FOLLOWING CONDITIONS APPLY EXCEPT OTHERWISE STATED.

1. REF. TO HY0230261 FOR UNSPECIFIED TOLERANCES.
2. CHAMFER M/CD. SHARP EDGES 1.2 TO 1.0 AT 45°.
3. INTERNAL M/CD. CORNER RADII 1 TO 0.7
4. THE SURFACE ROUGHNESS WHERE-EVER NOT SHOWN SHALL BE TAKEN FROM THE SURFACE ROUGHNESS SHOWN OUT SIDE THE BACK SLASH GIVEN OR THE TOP MOST RIGHT CORNER OF THE DRG.

TYPE OF PRODUCT: 803 XRP MILL

NAME OF CUSTOMER/PROJECT

BHARAT HEAVY ELECTRICALS LIMITED
HYDERABAD

	NAME	SIGN.	DATE	NO.OF VAR.
DRN.	N.D.SAMUEL		06.08.1998	\
CHD.	S.G		06.08.1998	
APPD.	K.M.RAO		06.08.1998	

DEPT.	UNTOL. DIMS. GR.		SCALE	WEIGHT (KG)	REF. TO ASSY DRG.	ITEM NO.	NO.OF ITEMS
PULV ENGG. CODE 446	¢/M/¢		1:5	249.40		33	\

TITLE: UPPER BRG.HSG. (TIGHT FIT)

DRAWING NO. 2-61-180-90077 REV. 05

SHEET NO. 01 NO OF SHEETS 01

REV.	DATE	ALTERED	APPD.	REV.	DATE	ALTERED	APPD.	REV.	DATE	ALTERED	APPD.
		CHD.				CHD.		05	30.6.2006	E.M.A / CHD. AMAN	
ZONE				ZONE				ZONE	DRAWING REDRAWN.		

COMPUTER FILE NAME 26190077

REF. DRG. NO.

SIGN. AND DATE

INVENTORY NO

FIRST ANGLE PROJECTION

(ALL DIMENSIONS ARE IN mm)

DRG.NO. 2-61-376-90004

DJC

THIS THE PROPERTY OF BHARAT HEAVY ELECTRICALS LIMITED.
THE INFORMATION ON THIS DOCUMENT IS THE
IT MUST NOT BE USED DIRECTLY OR INDIRECTLY IN ANY WAY DETRIMENTAL TO THE INTEREST OF THE COMPANY.

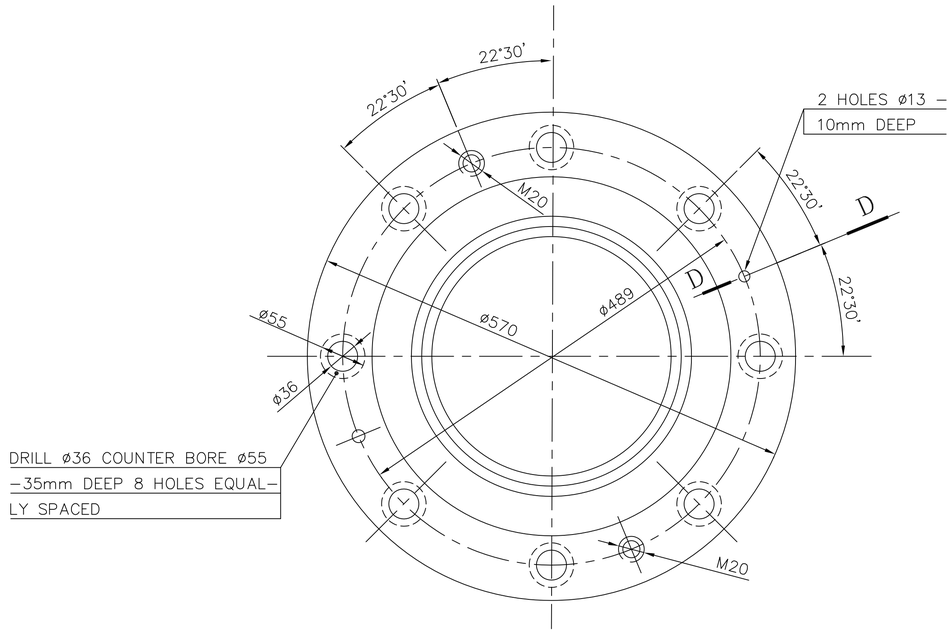

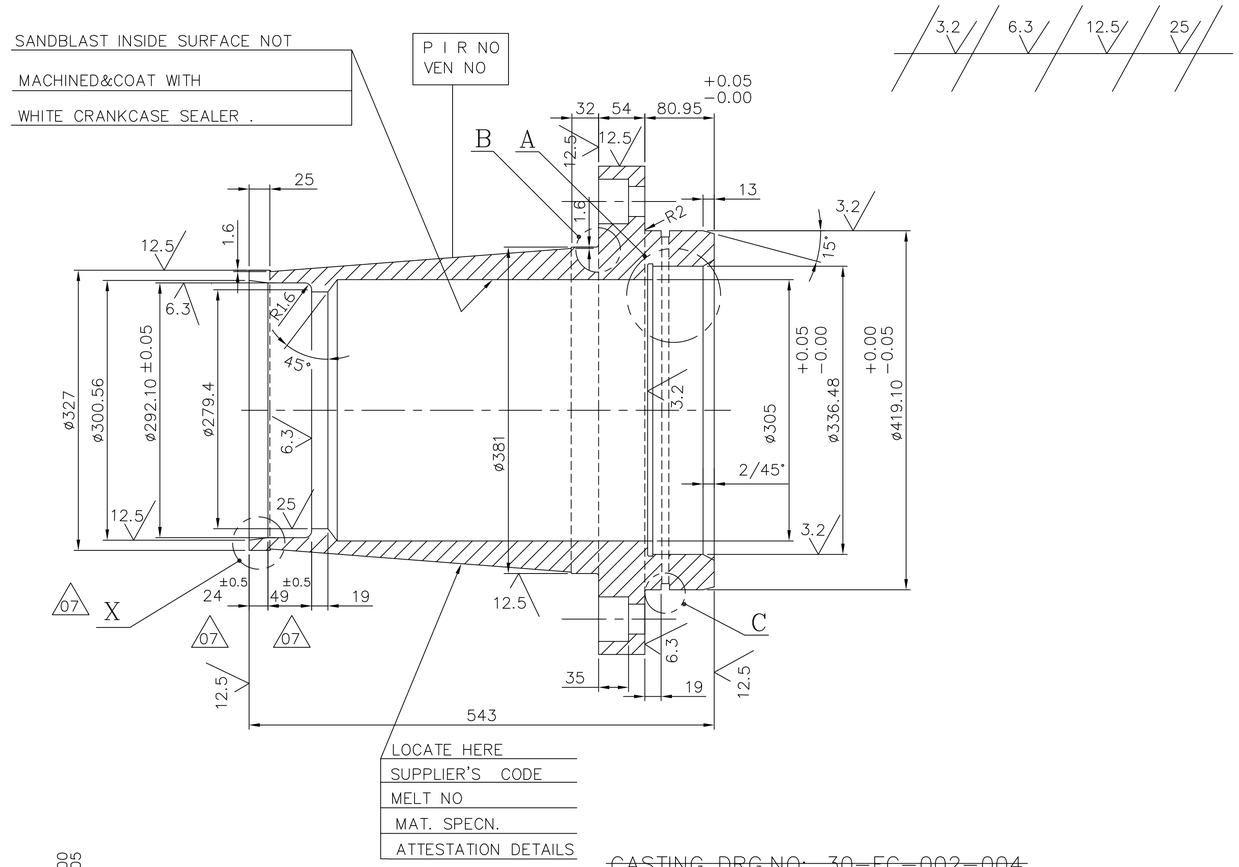

~~CASTING DRG.NO: 30-FC-002-004~~

MATERIAL : CAST IRON

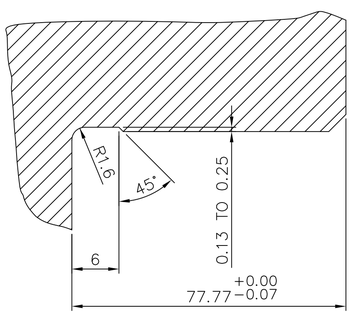

DETAIL–A

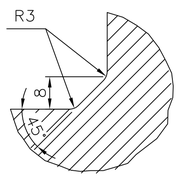

DETAIL–B

1:1

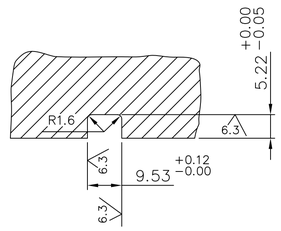

DETAIL–C

1:1

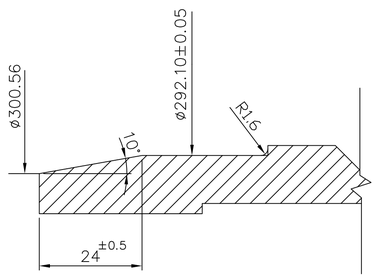

DETAIL–X 07

1:1

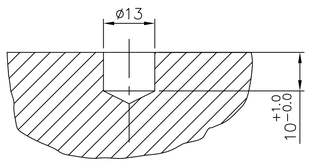

SECTION–DD

1:1

CASTING MUST WITHSTAND HYDRO TEST OF 4KG/CM^2 FOR 30 MINUTES WITH OUT LEAKAGE.

BREAK ALL SHARP EDGES.

ITEM NO	DESCRIPTION	DRAWING NO.	VAR. NO.	RAW MATERIAL SIZE OR CASTING DRG.NO. OR FORGING DRG.NO.	MATERIAL CODE / MATERIAL SPECN.	UNIT WT. / QUANTITY
01	CASTING			PATTERN NO. M-67-072	BA9110321144 / AA19703	195.00 / 1

THE FOLLOWING CONDITIONS APPLY EXCEPT OTHERWISE STATED...

1. REF.TO HY0230261 FOR UNSPECIFIED TOLERANCES.
2. CHAMFER M/CD SHARP EDGES 1.2 TO 1.0 AT 45°.
3. INTERNAL M/CD CORNER RADII 1 TO 0.7.
4. THE SURFACE ROUGHNESS WHEREVER NOT SHOWN SHALL BE TAKEN FROM THE SURFACE ROUGHNESS SHOWN OUT SIDE BACK SLASHES GIVEN AT THE TOP MOST RIGHT CORNER OF THE DRG.

TYPE OF PRODUCT OR NAME OF CUSTOMER/PROJECT: 76" BOWL MILL MATERIAL ATTEST

BHARAT HEAVY ELECTRICALS LTD. HYDERABAD

	NAME	SIGN.	DATE
DRN.	NDS		24.6.98
CHD.	S GHATGE		24.6.98
APPD.	KMR		24.6.98

NO.OF VAR.

DEPT.	BMD	SCALE	WEIGHT(Kg)	REF. TO ASSY DRG.	ITEM NO.	NO.OF ITEMS
CODE	446	1:5 1:1,2:1	195.0	0-61-376-00007/01		

TITLE: UPPER JOURNAL HOUSING

DRAWING NO. 2-61-376-90004 REV. 08

SHEET NO. NO OF SHEETS

REV.	DATE	ALTERED	CHECKED	APPD.
08	26.9.06	C'BORE ø55 WAS ø52.		
07	25/6/98	DWG REDRAWN INCORPORATING PREVIOUS REVISION. ø300.56 WAS ø303.20 CHAMFER 10° INTRODUCED ON DIA 300.56 DIMNS. 24±0.5 AND 49±0.5 WERE 22 AND 51 RESPECTIVELY. DETAIL – X ADDED.		

COMP. FILE NAME | REF.DRG.NO. | INVENTORY NO.

TD-150/REV.NO.03 SIZE A2

FIRST ANGLE PROJECTION

(ALL DIMENSIONS ARE IN mm)

DRG. NO. 2-61-576-00057 | SH. 01 OF 01

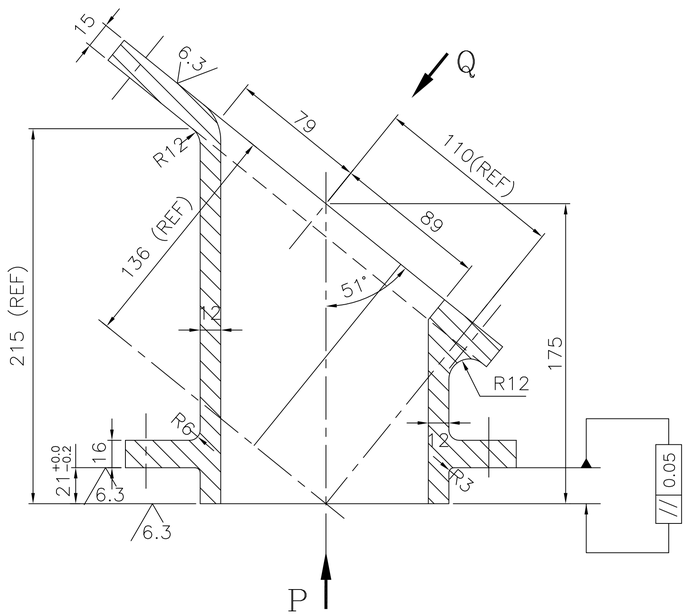

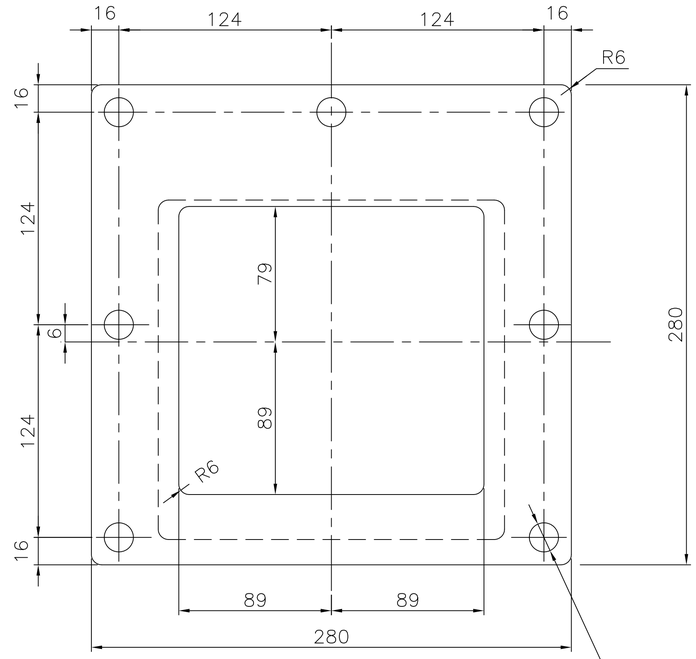

12.5 7 HOLES ø17

VIEW–Q

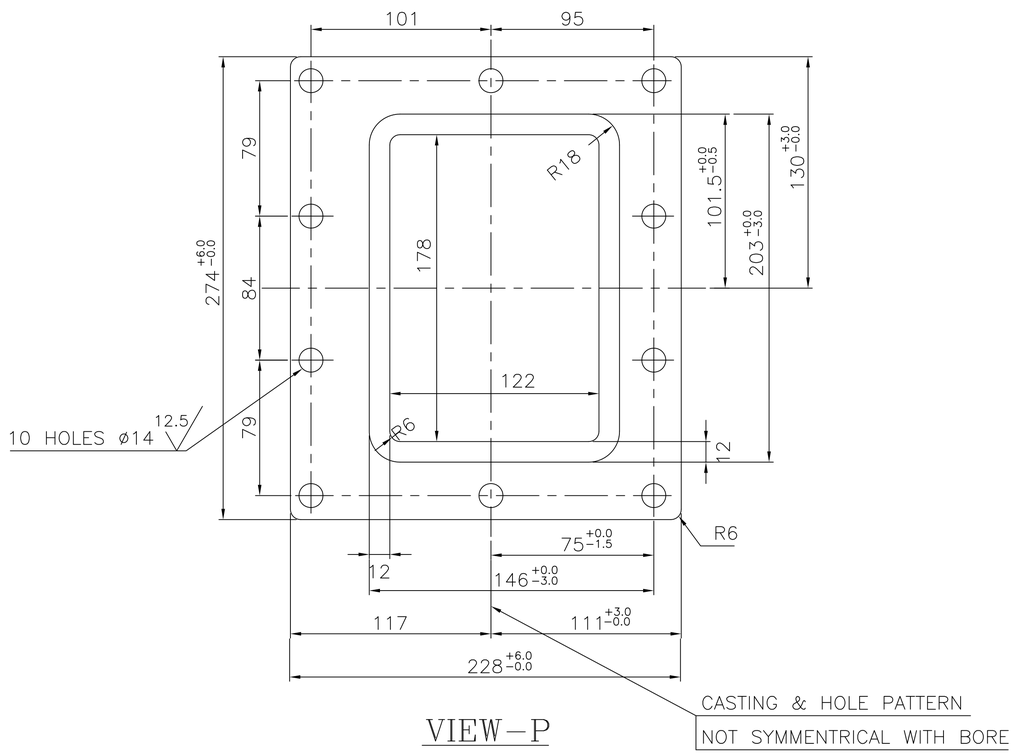

VIEW–P

NOTES:–

01. BREAK ALL SHARP EDGES & CORNERS UNLESS OTHERWISE SPECIFIED.

ITEM NO.	DESCRIPTION	DRAWING NO.	VAR. NO.	RAW MATERIAL SIZE OR CASTING DRG. NO. OR FORGING DRG. NO.	MATERIAL CODE	NET WT.	GROSS WT.
	CASTING				BA9110300007	22.00	
					AA19703		
					MATERIAL SPECN.	QUANTITY	

THE FOLLOWING CONDITIONS APPLY EXCEPT OTHERWISE STATED.

1. REF. TO HY0230261 FOR UNSPECIFIED TOLERANCES.
2. CHAMFER M/CD. SHARP EDGES 1.2 TO 1.0 AT 45°.
3. INTERNAL M/CD. CORNER RADII 1 TO 0.7
4. THE SURFACE ROUGHNESS WHERE–EVER NOT SHOWN SHALL BE TAKEN FROM THE SURFACE ROUGHNESS SHOWN OUT SIDE THE BACK SLASH GIVEN OR THE TOP MOST RIGHT CORNER OF THE DRG.

TYPE OF PRODUCT

NAME OF CUSTOMER/PROJECT

BHARAT HEAVY ELECTRICALS LIMITED
HYDERABAD

	NAME	SIGN.	DATE	NO.OF VAR.
DRN.	UNIC		24.1.97	NA
CHD.	B.M.R		99.3.3	
APPD.	B.RAMANNA		99.3.3	

DEPT.	UNTOL. DIMS. GR.		SCALE	WEIGHT (KG)	REF. TO ASSY DRG.	ITEM NO.	NO.OF ITEMS
PULV ENGG. CODE 446	¢/M/F		1:4	22.00	20–F–002–059	NA	NA

TITLE: TRAMP IRON SPOUT ADAPTER

CARD CODE: /

DRAWING NO. 2–61–576–00057 REV. 03

SHEET NO. 01 NO OF SHEETS 01

REV.	DATE	ALTERED	APPD.	REV.	DATE	ALTERED	APPD.	REV.	DATE	ALTERED UC	APPD.
		CHD.				CHD.		03	99.03.03	CHD.	
ZONE				ZONE				ZONE			

DRG REPLOTTED.
DIMN 6 WAS 10,DIMN'S 130 & 150 DELETED
DIMN 89 SHOWN CORRECTLY

GENERAL DIMENSIONAL LIMITS,FITS & TOLERANCES AS PER HY0230261

COMPUTER FILE NAME 26100057.DWG | THE INFORMATION ON THIS DOCUMENT IS THE PROPERTY OF BHARAT HEAVY ELECTRICALS LIMITED. IT MUST NOT BE USED DIRECTLY OR INDIRECTLY IN ANY WAY DETRIMENTAL TO THE INTEREST OF THE COMPANY

SIGN. AND DATE | REF. DRG. NO. | INVENTORY NO

FIRST ANGLE PROJECTION

CAUTION: THE INFORMATION ON THIS DOCUMENT IS THE PROPERTY OF BHARAT HEAVY ELECTRICALS LTD. IT MUST NOT BE USED DIRECTLY OR INDIRECTLY IN ANY WAY DETRIMENTAL TO THE INTEREST OF THE COMPANY.

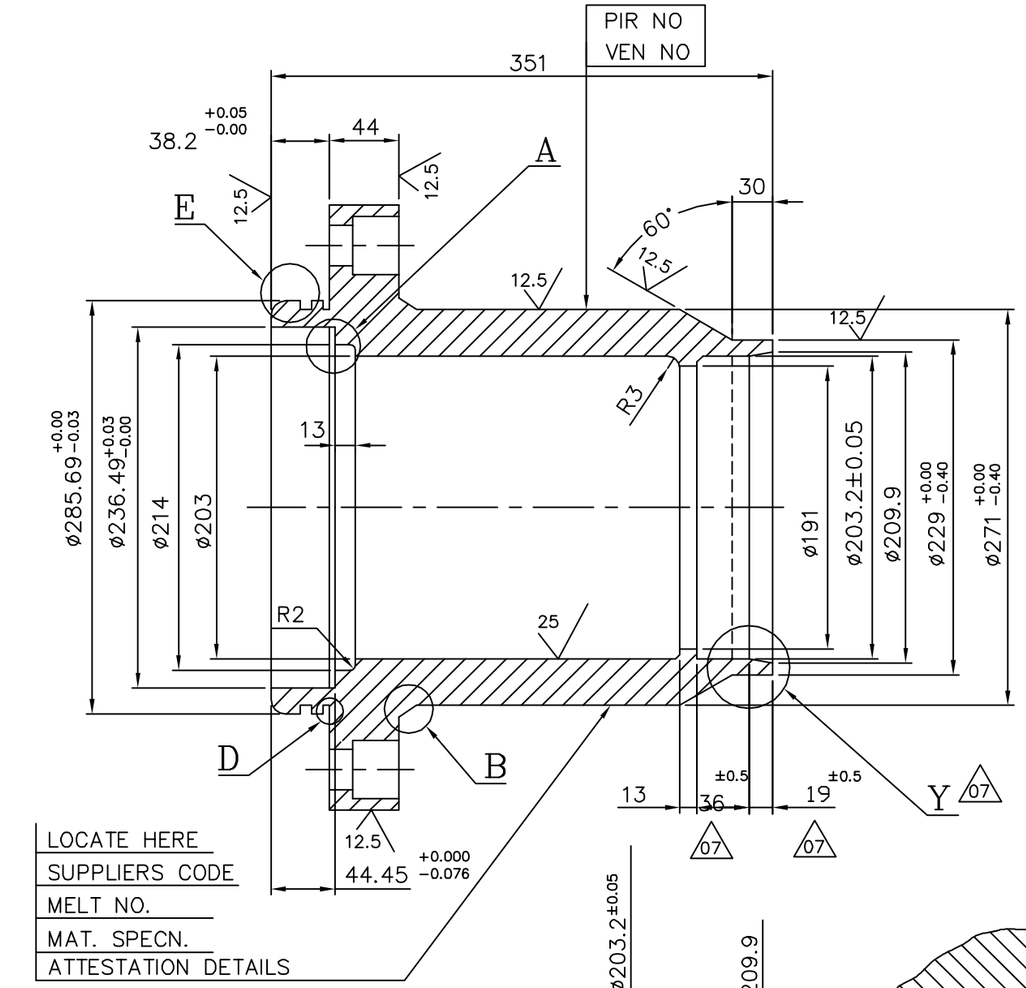

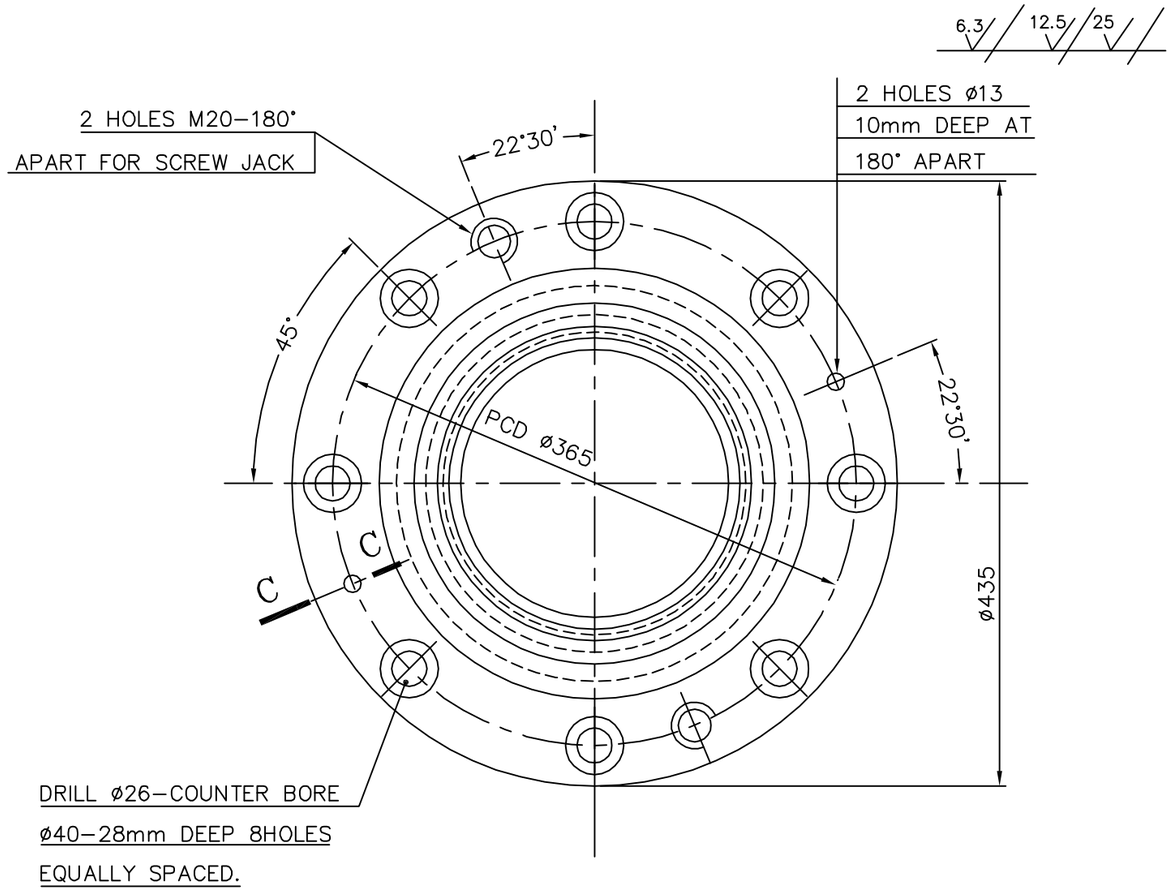

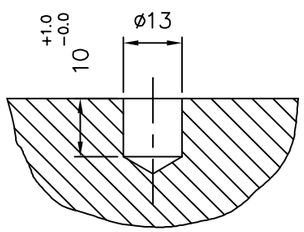

SECTION−CC

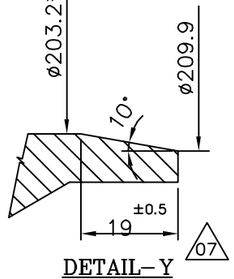

DETAIL−Y

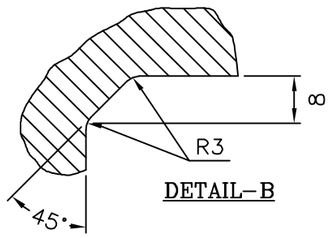

DETAIL−B

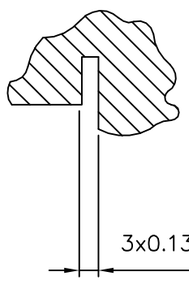

DETAIL−D

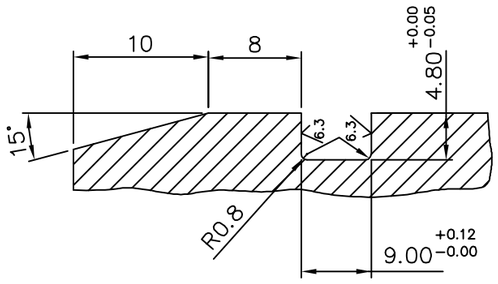

3x0.13 +0.13 −0.00 UNDERCUT

DETAIL−E

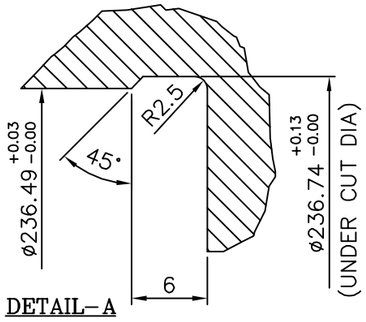

DETAIL−A

~~OLD PATTERN NO: 30F−002−206~~

NEW PATTERN NO: (REF) 3−60−360−00109

CASTING MUST WITHSTAND A HYDROTEST OF 4kg/cm² for ø5MIN WITH OUT LEAKAGE

	BA9110321020			73.0		
	AA19703			1		
IT.NO	MATL CODE	A/C	UNIT	UNIT WT.	GS	ZONE
VAR.	MATL SPECN			QTY.		
→ CARD TYPE−1						

REV		ALTERED
07		CHECKED

DRG. REDRAWN INCOPORATING ALL PREVIOUS REVISIONS. ø209.9 WAS ø206. 10° CHAMFER ADDED ON DIA 203.2. DIMNS 36±0.5 AND 19±0.5 WERE 38 AND 17 RESPECTIVELY DETAIL−Y ADDED.

TYPE OF PRODUCT OR NAME OF CUSTOMER/PROJECT

MATERIAL ATTEST "60" BOWL MILL

Bharat Heavy Electricals Ltd.
HYDERABAD

	NAME	SIGN	DATE
DRN			
CHD.			
APPO.			

DEPT.	GRADE OF UNTOL. DIM		SCALE	WEIGHT(KG)	REF. TO ASSY. DRG.
CODE 446	¢/M/F		1:5	73.0	0−61−362−90008 0−60−360−00011

TITLE: UPPER JOURNAL HOUSING

CARD CODE

DRAWING NO. 3−60−360−00109

REV. 07

SHEET NO. | NO. OF SHEETS

FIRST ANGLE PROJECTION

(ALL DIMENSIONS ARE IN mm)

DRG.NO. 3-61-004-02324

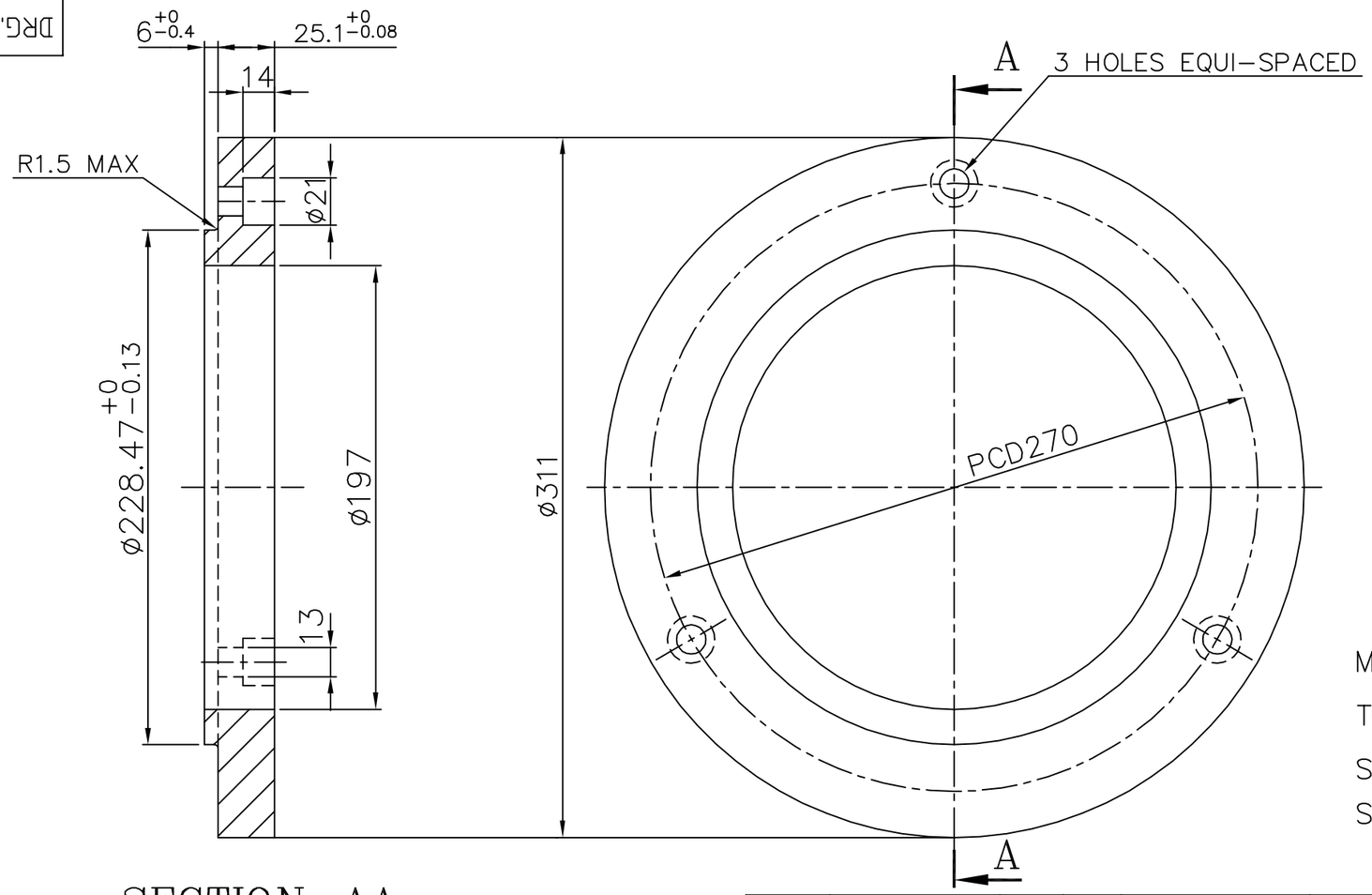

SECTION–AA

6.3

NOTES: –

1. TOLERANCE UNLESS OTHERWISE NOTED:
   CASTING=1.5
   FRACTIONAL=0.4
2. BREAK ALL SHARP EDGES AND CORNERS UNLESS OTHERWISE NOTED:

MACHINE ALL SURFACES TO 6.3 UNLESS. OTHERWISE SHOWN ROUGHNESS RATINGS SHOWN ARE MAXIMUM.

UNIT OF QTY / R.M.UNIT QTY	VAR. No.	DESCRIPTION	ITEM No.	STD	DRAWING NO.	MATERIAL CODE / MATERIAL SPECN.	NET WT. / QUANTITY	GROSS WT.
		CASTING				BA9110350039 / AA19703	9.500 / 1	

THE FOLLOWING CONDITIONS APPLY EXCEPT OTHERWISE STATED...

1. REF.TO HY0230261 FOR UNSPECIFIED TOLERANCES.
2. CHAMFER M/CD SHARP EDGES 1.2 TO 1.0 AT 45°.
3. INTERNAL M/CD CORNER RADII 1 TO 0.7.
4. THE SURFACE ROUGHNESS WHEREVER NOT SHOWN SHALL BE TAKEN FROM THE SURFACE ROUGHNESS SHOWN OUT SIDE BACK SLASHES GIVEN AT THE TOP MOST RIGHT CORNER OF THE DRG.

REV.	DATE	ALTERED / CHECKED	APPD.	REV.	DATE	ALTERED / CHECKED	APPD.
				01	23.5.99		

DRAWING REDRAWN IN AUTOCAD.

TYPE OF PRODUCT OR NAME OF CUSTOMER/PROJECT: 1043 R.P. BOWL MILL CHANDRAPUR–500MW

BHARAT HEAVY ELECTRICALS LTD. HYDERABAD

	NAME	SIGN.	DATE	NO.OF VAR.
DRN.	J.C.S		22.05.99	–
CHD.	E M A		22.05.99	
APPD.	K.M.RAO		22.05.99	

DEPT.	BMD	SCALE	WEIGHT (KG)	REF. TO ASSY DRG.	ITEM NO.	NO.OF ITEMS
CODE	446	1:2.5	9.500	0–61–004–00571	09	32

TITLE: TRUNNION BUSH RETAINER

DRAWING NO. 3–61–004–02324 REV. 01

SHEET NO. 01 NO OF SHEETS 01

TD–151/REV. 03 SIZE A3

THE INFORMATION ON THIS DOCUMENT IS THE PROPERTY OF BHARAT HEAVY ELECTRICALS LTD. IT MUST NOT BE USED DIRECTLY OR INDIRECTLY IN ANY WAY DETRIMENTAL TO THE INTEREST OF THE COMPANY.

COMP. FILE NAME 36102324.DWG

REF.DRG.NO. IB–110–00316/01

INVENTORY NO.

FIRST ANGLE PROJECTION

(ALL DIMENSIONS ARE IN mm)

DRG. NO. 3-61-176-00005

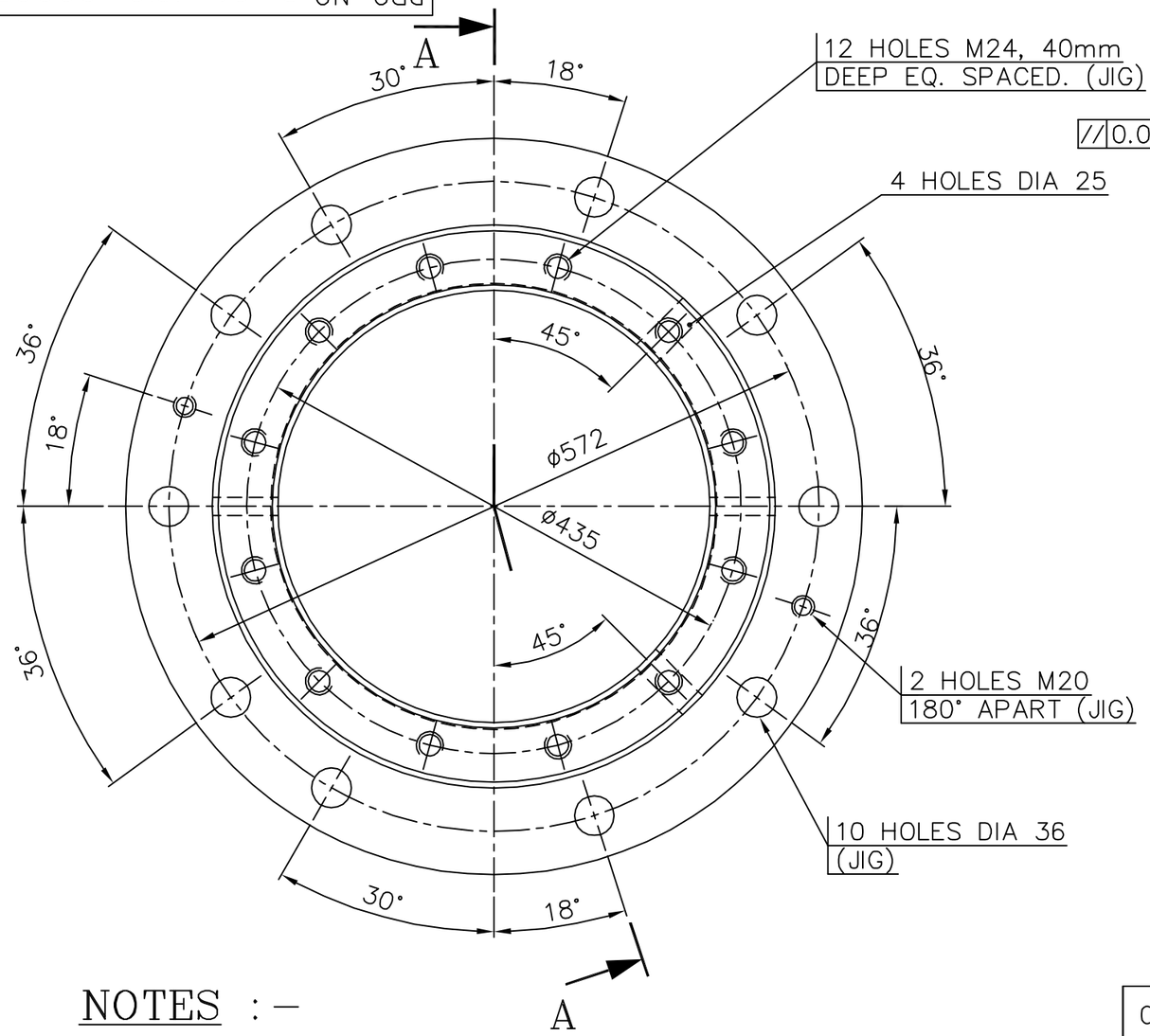

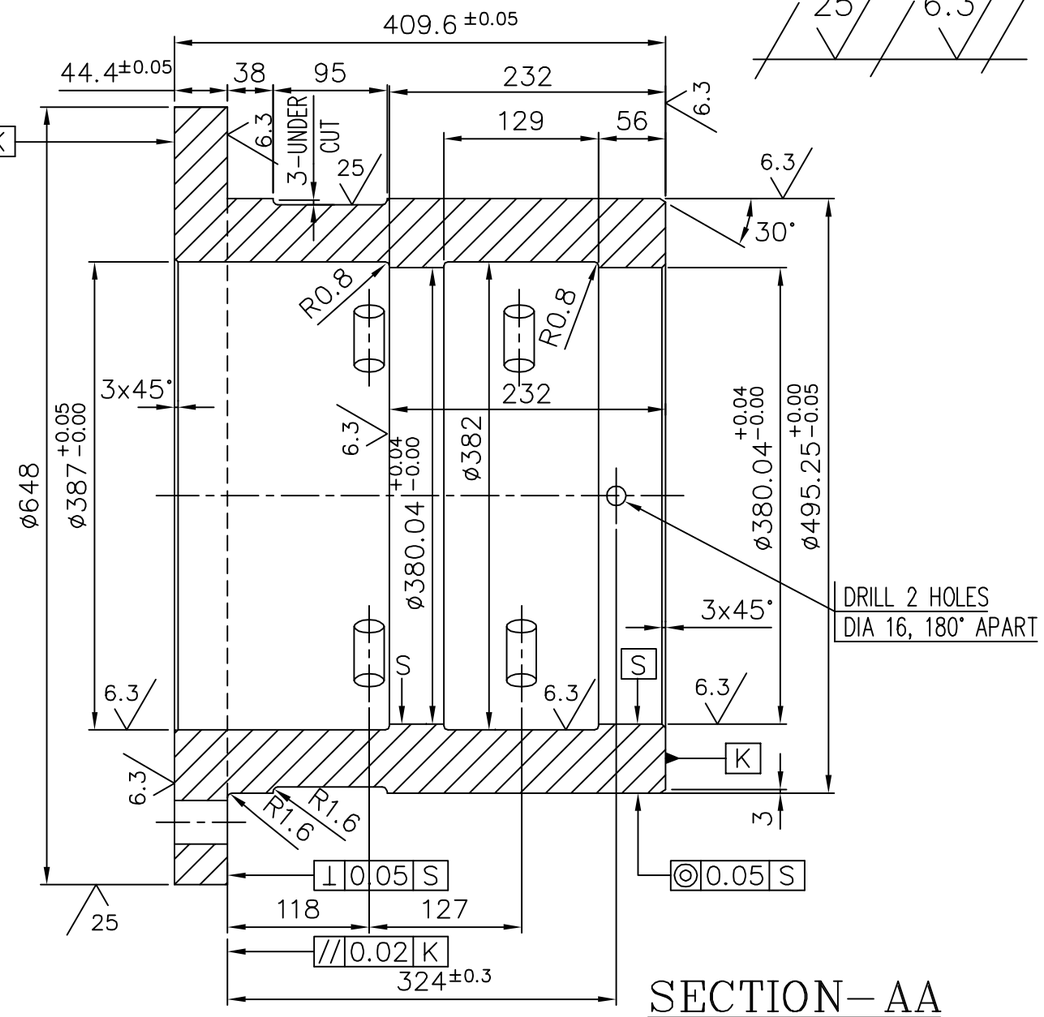

SECTION–AA

NOTES :–

01. REMOVE ALL SHARP EDGES.
02. BEFORE UNLOADING THE JOB FROM THE MACHINE, PARALLELITY OF THE SURFACES SHOULD BE CHECKED.

ITEM NO	DESCRIPTION	DRAWING NO	MATERIAL CODE / MATERIAL SPEC.	UNIT WT. / QTY.
01	THRUST BRG. HSG. CASTING		BA9110321101 / AA19703	303.00 / 1

TYPE OF PRODUCT OR NAME OF CUSTOMER/PROJECT: 763 THRU 1003 XRP BOWL MILLS

BHARAT HEAVY ELECTRICALS LIMITED. HYDERABAD

	NAME	SIGN.	DATE	NO.OF VAR.
DRN.	E.M.ASHOK		12-07-03	01
CHD.	AMAN		12-07-03	
APPD.	S.G		12-07-03	

REV.	DATE	ALTERED	CHECKED	APPD	REV.	DATE	ALTERED	CHECKED	APPD	REV.	DATE	ALTERED	CHECKED	APPD
										08	12-07-03	E.M.ASHOK		
ZONE					ZONE					ZONE	DRAWING REDRAWN INCORPORATING ALL PREVIOUS REVISIONS.			

DEPT. PULV.ENGG	GRADE OF TOL.DIM.		SCALE	WEIGHT (KG)	REF. TO ASSY DRG.	ITEM NO.	NO.OF ITEMS
CODE 446	¢/M/f		1:5	303.00	------	--	--

TITLE: THRUST BRG. HOUSING

CARD CODE: N.A.

DRAWING NO. 3-61-176-00005 REV. 08

SHEET NO. 01 NO OF SHEETS 01

THE INFORMATION ON THIS DOCUMENT IS THE PROPERTY OF BHARAT HEAVY ELECTRICALS LIMITED. IT MUST NOT BE USED DIRECTLY OR INDIRECTLY IN ANY WAY DETRIMENTAL TO THE INTREST OF THE COMPANY

REF. DRG. NO. 30-F-002-127

SIGN. AND DATE

INVENTORY NO

361005.DWG/1135

FIRST ANGLE PROJECTION

(ALL DIMENSIONS ARE IN mm)

DRG.NO. 3-61-176-00012

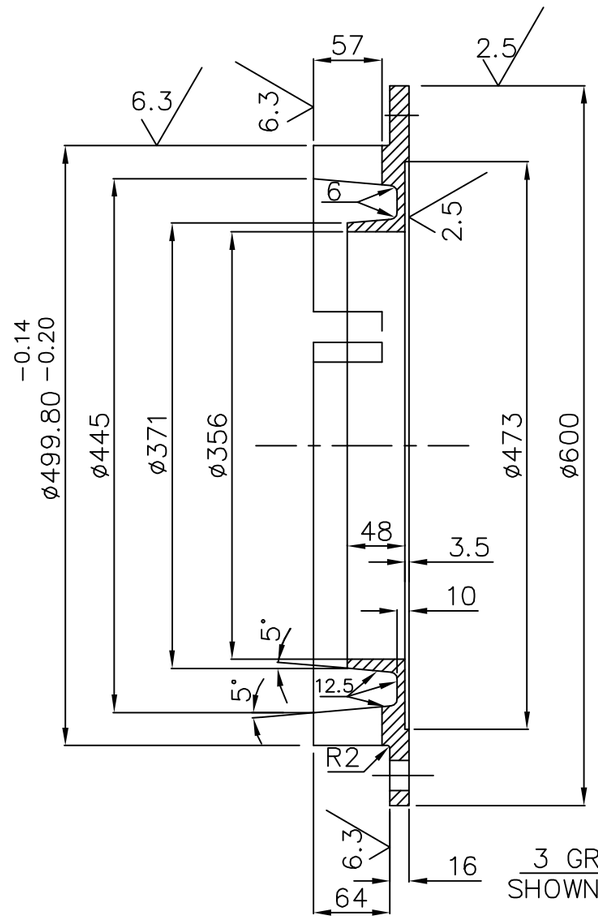

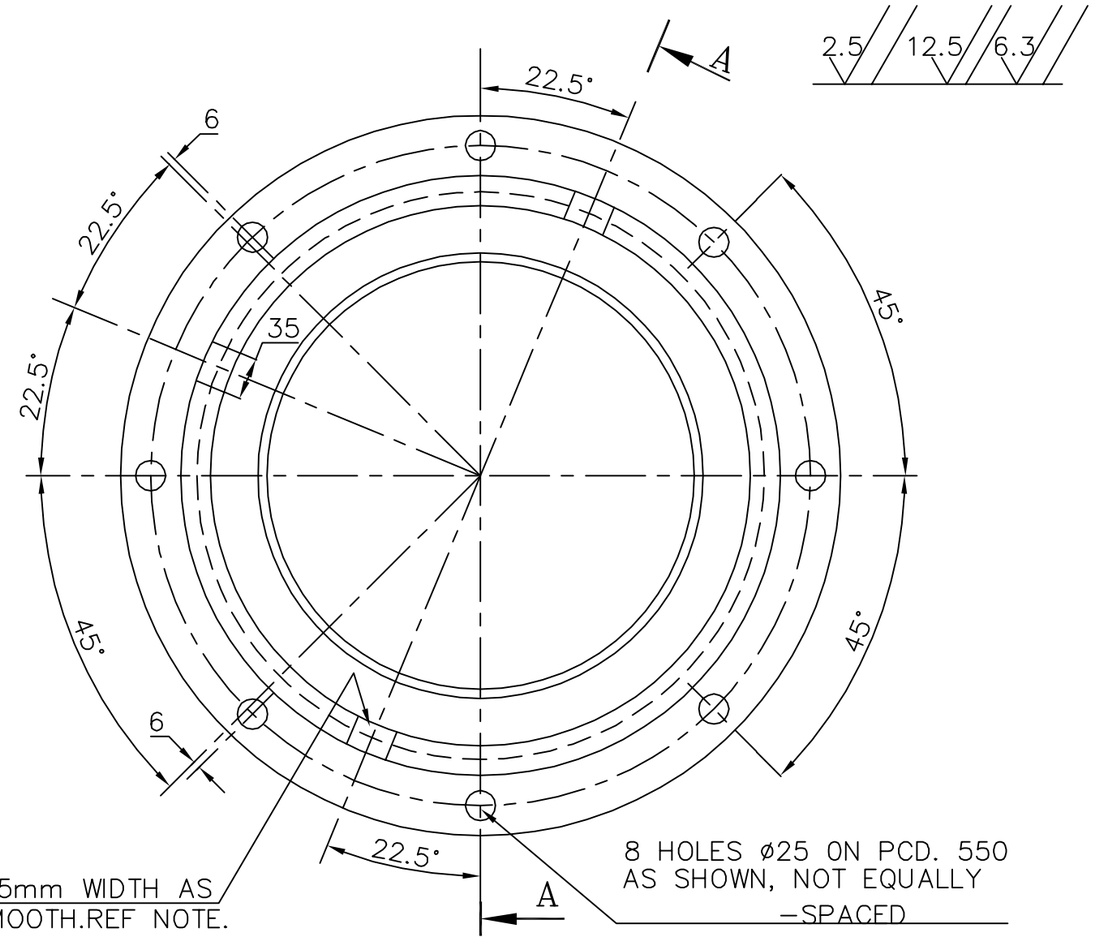

ITEM NO	DESCRIPTION	DRAWING NO.	VAR. NO.	RAW MATERIAL SIZE OR CASTING DRG.NO. OR FORGING DRG.NO.	MATERIAL CODE / MATERIAL SPECN.	NET WT.	GROSS WT. / QUANTITY
01	CASTING	PATTERN NO.M-67-052			BA9110306765 / AA19703	36.00	1

THE FOLLOWING CONDITIONS APPLY EXCEPT OTHERWISE STATED...

1. REF.TO HY0230261 FOR UNSPECIFIED TOLERANCES.
2. CHAMFER M/CD SHARP EDGES 1.2 TO 1.0 AT 45°.
3. INTERNAL M/CD CORNER RADII 1 TO 0.7.
4. THE SURFACE ROUGHNESS WHEREVER NOT SHOWN SHALL BE TAKEN FROM THE SURFACE ROUGHNESS SHOWN OUT SIDE BACK SLASHES GIVEN AT THE TOP MOST RIGHT CORNER OF THE DRG.

TYPE OF PRODUCT OR NAME OF CUSTOMER/PROJECT: 763 XRP BOWL MILL

BHARAT HEAVY ELECTRICALS LTD. HYDERABAD

	NAME	SIGN.	DATE	NO.OF VAR.
DRN.	RAZVI		19.2.04	
CHD.	G.S.N.M.RAO		19.2.04	
APPD.	KMR		19.2.04	

DEPT. PULV ENGG. / CODE 446	SCALE	WEIGHT (KG)	REF. TO ASSY DRG.	ITEM NO.	NO.OF ITEMS
	1:5	36.00	06118000144	125	-

TITLE: OIL COLLECTOR

DRAWING NO. 3-61-176-00012 REV. 05

SHEET NO. / NO OF SHEETS

REV.	DATE	ALTERED	CHD.	APPD.
05	13.6.06	ALTERED	CHD. AMAN	APPD. SG

ZONE: DRILL JIG DELETED.

INVENTORY NO. / REF.DRG.NO. / FILE NAME: 36100012.dwg

THE INFORMATION ON THIS DOCUMENT IS THE PROPERTY OF BHARAT HEAVY ELECTRICALS LTD. IT MUST NOT BE USED DIRECTLY OR INDIRECTLY IN ANY WAY DETRIMENTAL TO THE INTEREST OF THE COMPANY.

TD-151/REV. 03 SIZE A3

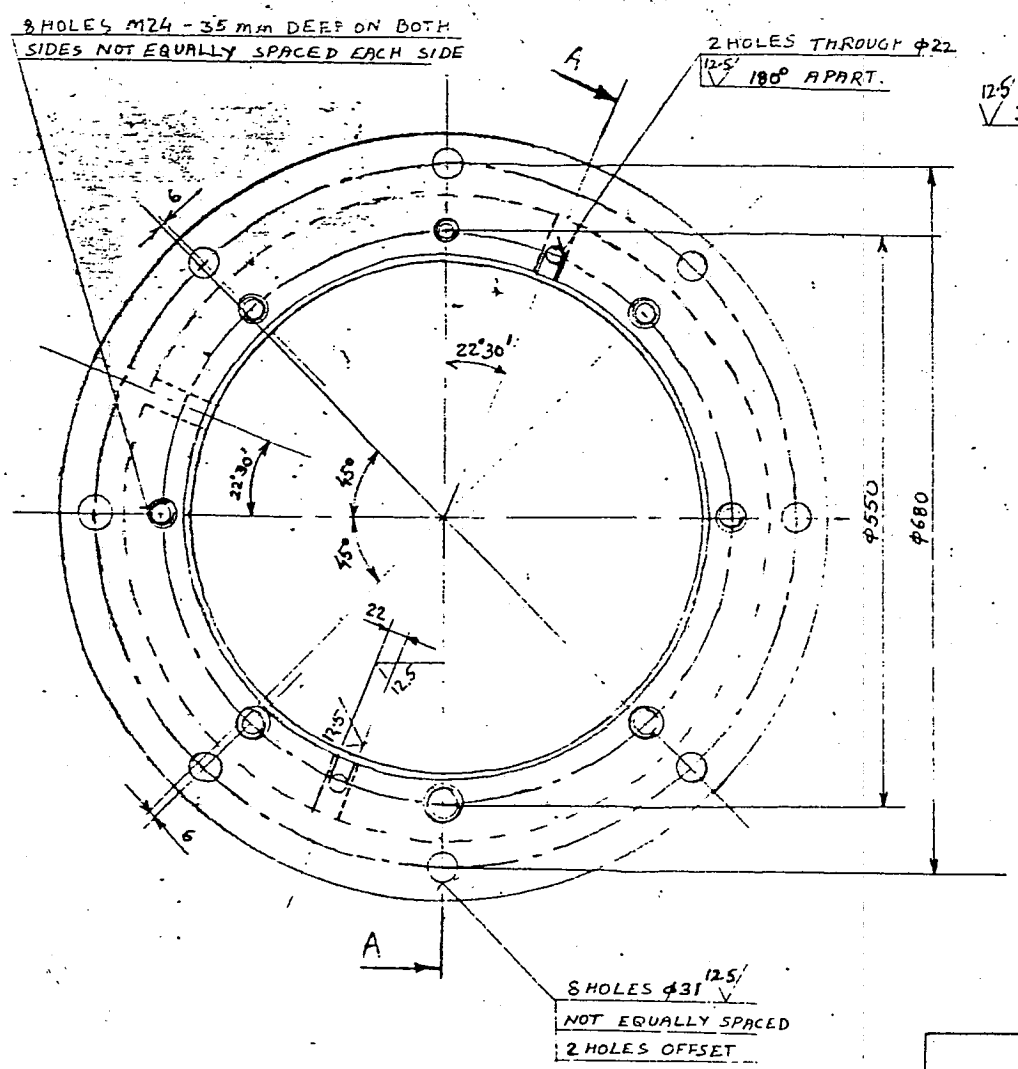

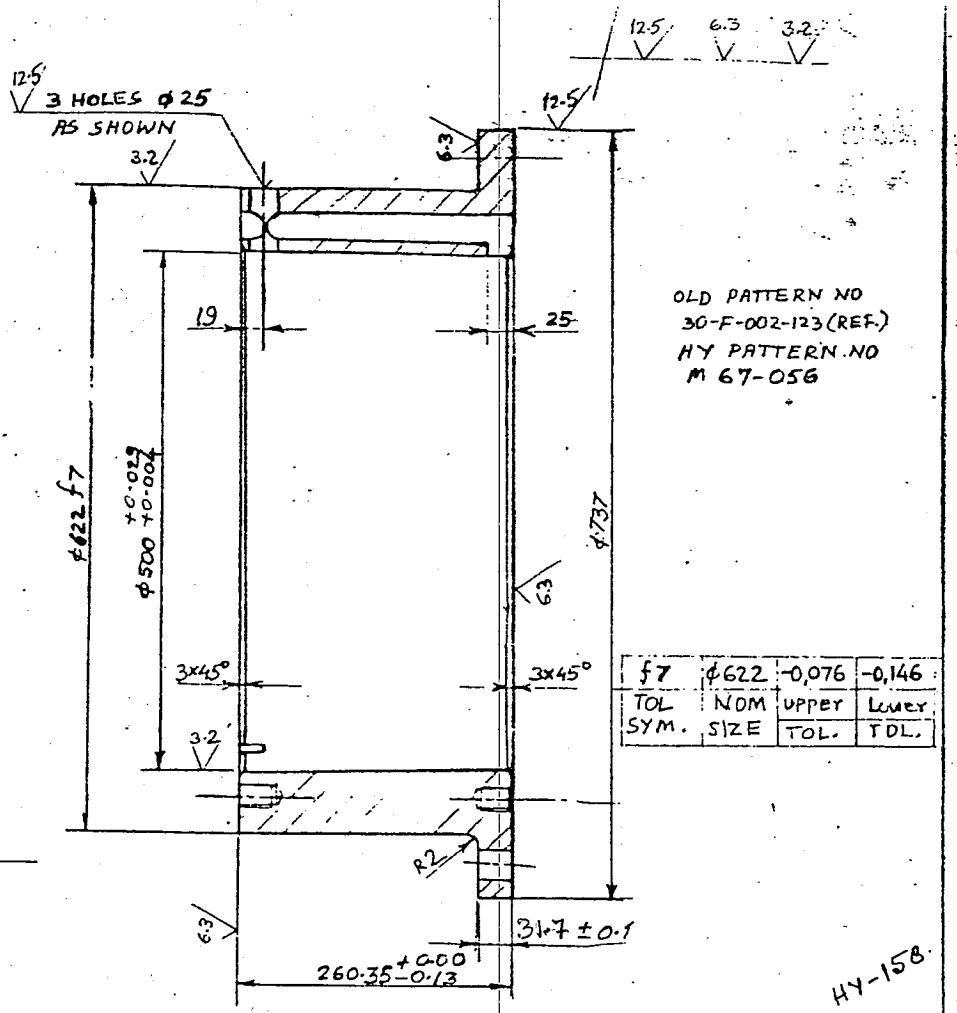

OLD PATTERN NO
30-F-002-123 (REF.)
HY PATTERN NO
M 67-056

f7	ϕ622	-0.076	-0.146
TOL SYM.	NOM SIZE	UPPER TOL.	LOWER TOL.

HY-158

BREAK ALL SHARP EDGES
REFER CASTING DRG. NO. 90-F-002-245

JS 210 Gr 25	BA9/1032/128	249	40	UPPER BEARING HOUSING
	AA19703			
	MATL CODE	UNIT WT. (KG.)		DESCRIPTION
	MATL. SPEC.	NO OFF		

BHARAT HEAVY ELECTRICALS LTD.
HEAVY EQUIPMENT REPAIR PLANT
SHIVPUR VARANASI

DRN	
CHD	S.C. Rai
APPD.	S.C. Rai
DATE	12.07.94

REV	DATE		REV.	DATE		REV	DATE	
03	29.3.80		02	19.10.79		01	19.10.79	
MATL. SPECN WAS C.I. A48-CL30. M.C. WAS 92/005/325			GROOVE DIMENSION 22 CORRECTED			2 X 45° CHAMFER ADDED		

BHEL | UPPER BRG. HOUSING | 3-61-176-00023/03 A

Master Copy

FIRST ANGLE PROJECTION

(ALL DIMENSIONS ARE IN mm)

DRG.NO. 3-61-276-00042

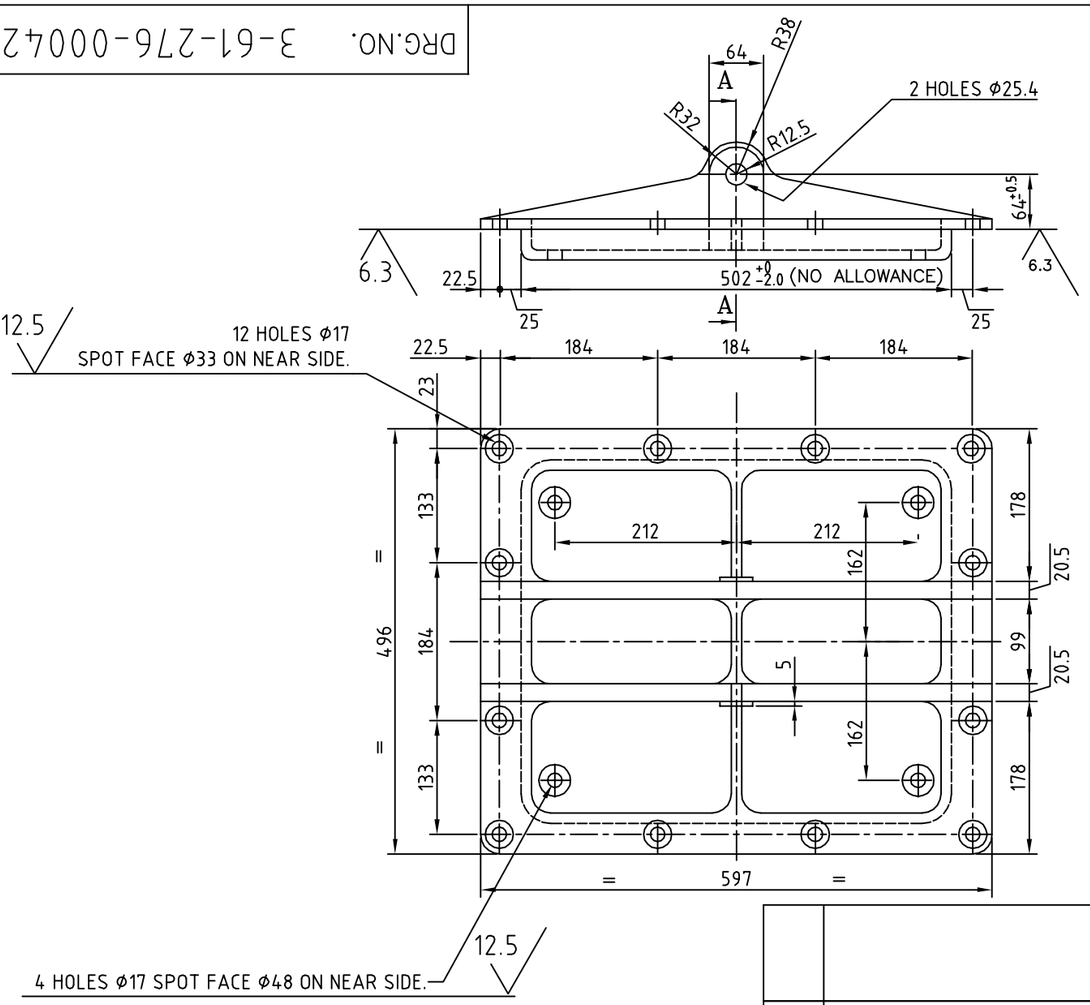

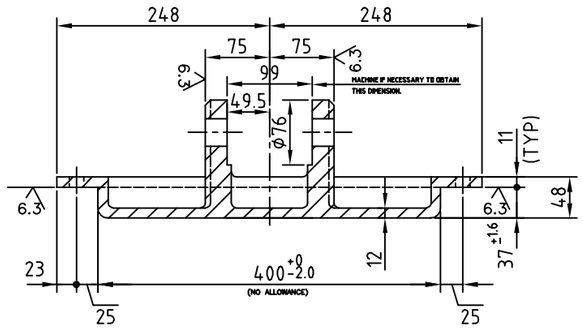

SECTION–AA

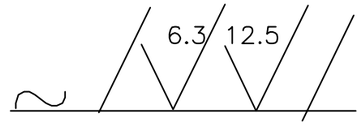

NOTE:

1. PATTERN No.M–67–063
2. THIS IS A FINISH MACHINED DRAWING. CASTING SHALL BE SUPPLIED IN ROUGH MACHINED CONDITION WITH 5mm ALLOWANCE ON ALL MACHINDED SURFACES.
3. BREAK ALL SHARP EDGES.

ITEM NO	DESCRIPTION	DRAWING NO.	VAR. NO.	RAW MATERIAL SIZE OR CASTING DRG.NO. OR FORGING DRG.NO.	MATERIAL CODE / MATERIAL SPECN.	NET WT.	GROSS WT.
01	CASTING				BA9110209000 / AA19702	29.50 / 1	

THE FOLLOWING CONDITIONS APPLY EXCEPT OTHERWISE STATED...

1. REF.TO HY0230261 FOR UNSPECIFIED TOLERANCES.
2. CHAMFER M/CD SHARP EDGES 1.2 TO 1.0 AT 45°.
3. INTERNAL M/CD CORNER RADII 1 TO 0.7.
4. THE SURFACE ROUGHNESS WHEREVER NOT SHOWN SHALL BE TAKEN FROM THE SURFACE ROUGHNESS SHOWN OUT SIDE BACK SLASHES GIVEN AT THE TOP MOST RIGHT CORNER OF THE DRG.

TYPE OF PRODUCT OR NAME OF CUSTOMER/PROJECT: 763,783,803,883,963,983&1003 BOWL MILLS

BHARAT HEAVY ELECTRICALS LTD. HYDERABAD

	NAME	SIGN.	DATE	NO.OF VAR.
DRN.	E.M.ASHOK		03-09-03	
CHD.	AMAN/NDS		03-09-03	
APPD.	S GHATGE		05-01-04	

DEPT.	PULVE.ENGG	SCALE	WEIGHT (KG)	REF. TO ASSY DRG.	ITEM NO.	NO.OF ITEMS
CODE	446	1:2	29.5	2.61.288.02089	01	18

TITLE: MILL SIDE INSPECTION DOOR

DRAWING NO. 3-61-276-00042 REV. 06

SHEET NO. 01 NO OF SHEETS 01

REV.	DATE	ALTERED	CHD.	APPD.
06	3.9.03	ALTERED E.M.ASHOK	CHD.	APPD.

ZONE: DRG REDRAWN ON AUTOCAD INCORPORATING ALL PREVIOUS REVISIONS.

THE INFORMATION ON THIS DOCUMENT IS THE PROPERTY OF BHARAT HEAVY ELECTRICALS LTD. IT MUST NOT BE USED DIRECTLY OR INDIRECTLY IN ANY WAY DETRIMENTAL TO THE INTEREST OF THE COMPANY.

FILE NAME: 36100042

REF.DRG.NO.

INVENTORY NO.

TD–151/REV. 03 SIZE A3

FIRST ANGLE PROJECTION

(ALL DIMENSIONS ARE IN mm)

DRG.NO. 3-61-376-00060

THE INFORMATION ON THIS DOCUMENT IS THE PROPERTY OF BHARAT HEAVY ELECTRICALS LTD.
IT MUST NOT BE USED DIRECTLY OR INDIRECTLY IN ANY WAY DETRIMENTAL TO THE INTEREST OF THE COMPANY.

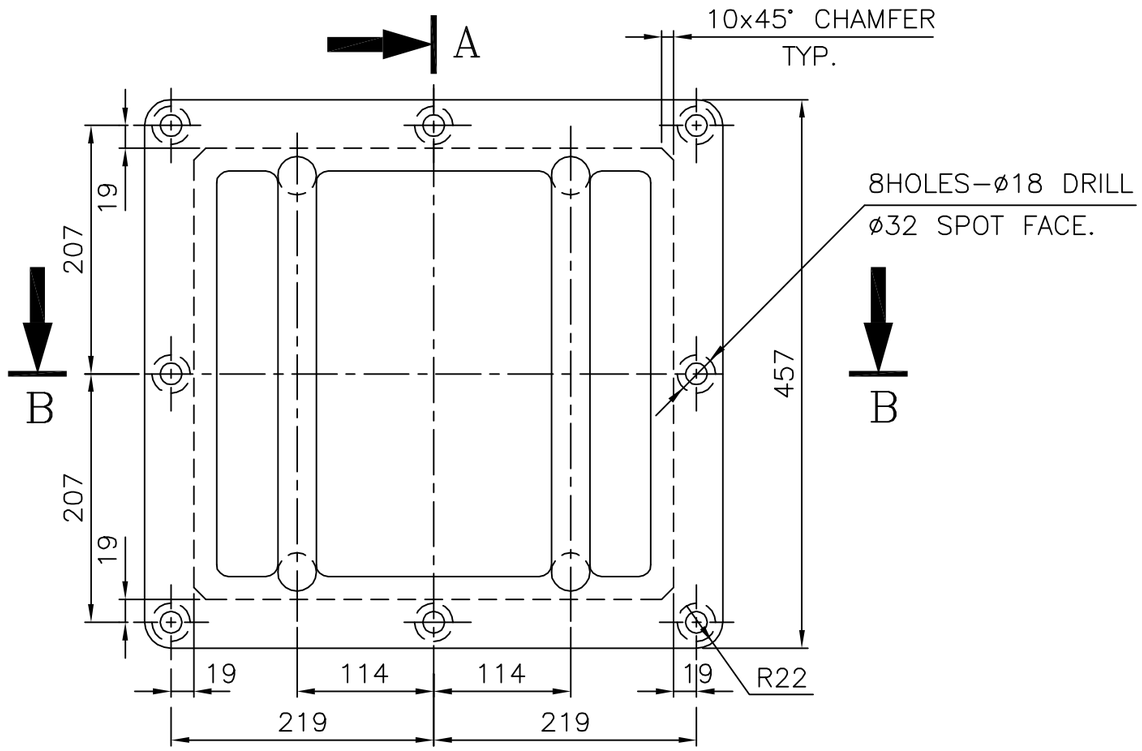

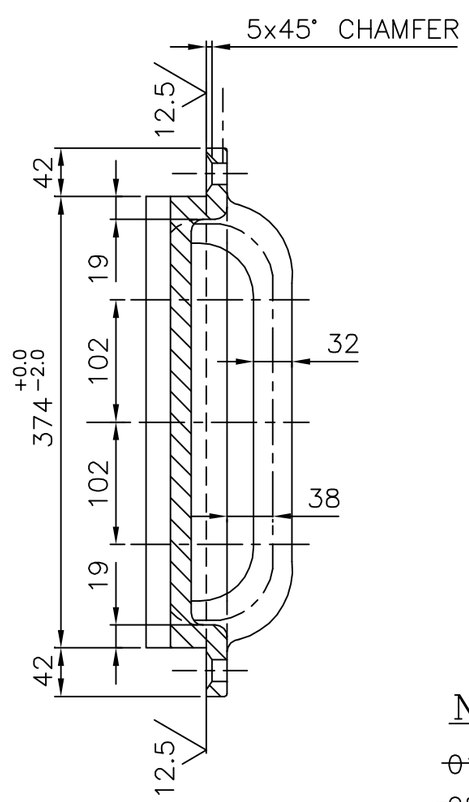

SECTION-AA

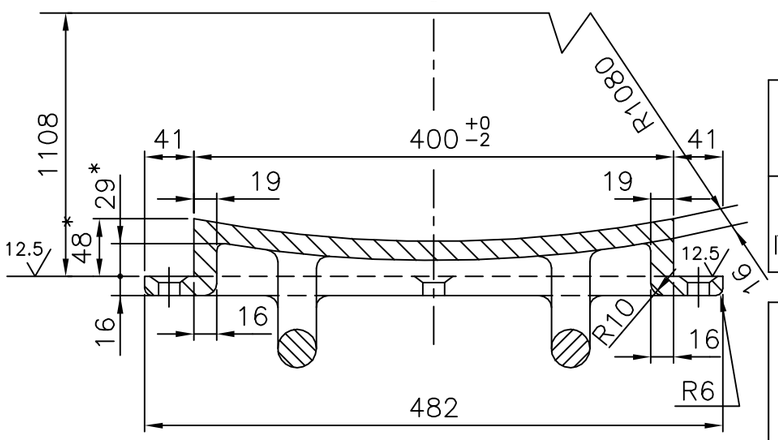

SECTION-BB

NOTES:-

~~01. CASTING DRG. No. 90-F-100-043~~

~~02. PATTERN ON 3-61-396-00060~~

* MAINTAIN WHEN MACHINING.

ITEM NO	DESCRIPTION	DRAWING NO.	VAR. NO.	RAW MATERIAL SIZE OR CASTING DRG.NO. OR FORGING DRG.NO.	MATERIAL CODE / MATERIAL SPECN.	NET WT.	GROSS WT.
01	CASTING				BA9110309004 / AA19703	43.00	

QUANTITY

THE FOLLOWING CONDITIONS APPLY EXCEPT OTHERWISE STATED...

1. REF.TO HY0230261 FOR UNSPECIFIED TOLERANCES.
2. CHAMFER M/CD SHARP EDGES 1.2 TO 1.0 AT 45°.
3. INTERNAL M/CD CORNER RADII 1 TO 0.7.
4. THE SURFACE ROUGHNESS WHEREVER NOT SHOWN SHALL BE TAKEN FROM THE SURFACE ROUGHNESS SHOWN OUT SIDE BACK SLASHES GIVEN AT THE TOP MOST RIGHT CORNER OF THE DRG.

REV.	DATE	ALTERED	CHD.	APPD.
05	23.10.97	UC		

ZONE: DRAWING REDRAWN BY INCORPORATING ALL PREVIOUS REVS.

TYPE OF PRODUCT OR NAME OF CUSTOMER/PROJECT

BHARAT HEAVY ELECTRICALS LTD. HYDERABAD

	NAME	SIGN.	DATE	NO.OF VAR.
DRN.	UNIC/BMR		23.10.97	/
CHD.	NDSAMUEL		23.10.97	
APPD.	S.GHATGE		23.10.97	

DEPT. PULV ENGG.	SCALE	WEIGHT (KG)	REF. TO ASSY DRG.	ITEM NO.	NO.OF ITEMS
CODE 446	1:5	43.00	B-RJ-1106-0	/	/

TITLE: SEPARATOR ACCESS DOOR

DRAWING NO. 3-61-376-00060 REV. 05

SHEET NO. 01 NO OF SHEETS 01

36100060.DWG FILE NAME

REF.DRG.NO.

INVENTORY NO.

TD-151/REV. 03 SIZE A3

FIRST ANGLE PROJECTION

ALL DIMENSIONS ARE IN mm.

DJC

REV.	DATE		REV.	DATE		REV.	DATE	
03	15.09.98	ALTERED N.D.S			ALTERED			ALTERED
		CHECKED S.G			CHECKED			CHECKED
		APPROVED K.M.R			APPROVED			APPROVED

DRAWING REDRAWN ON CAD INCORPORATING ALL THE PREVIOUS REVISIONS.

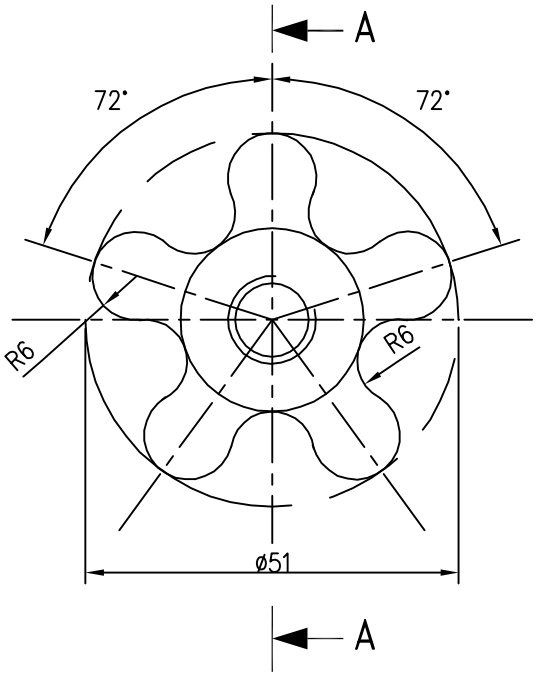

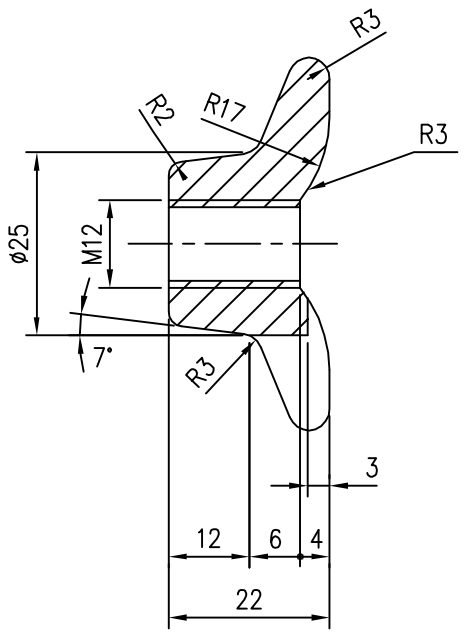

SECTION A-A

NOTE: –

1. DEBURR ALL SHARP EDGES.

CASTING			BA9110267026	0.09	
			AA19702	1	
DESCRIPTION & DRG. No.	VAR No.	RAW MATERIAL SIZE OR CASTING DRG.NO. OR FORGING DRG.NO.	MATL. CODE	NET.WT.	GROSS WT
			MATL. SPECN.	QTY.	

TYPE OF PRODUCT OR NAME OF CUSTOMER/PROJECT

BHARAT HEAVY ELECTRICALS LTD.
HYDERABAD

	NAME	SIGN	DATE
DRN.	N.D.S		15.9.98
CKD.	S.G		15.9.98
APPD.	K.M.R		15.9.98

NO.OF VAR. –

DEPT.	GRADE OF TOL. DIM.		SCALE	WEIGHT(K.G.)	REF.TO ASSY.DRG.	ITEM No.	No.OF ITEM
PULV. ENGG.	¢/M/f		1:1	0.09	1-61-388-01036	22	23
CODE 446							

TITLE

STAR WHEEL

DRAWING No. 4-61-376-00096

REV. 03

SHT. No. 1 | No. OF SHT. 1

REF. TO HY0230261 FOR UNSPECIFIED TOLERANCES.

THE INFORMATION ON THIS DOCUMENT IS THE PROPERTY OF BHARAT HEAVY ELECTRICALS LIMITED. IT MUST NOT BE USED DIRECTLY OR INDIRECTLY IN ANY WAY DETRIMENTAL TO THE INTEREST OF THE COMPANY.

COMPUTER No. 46100096.DWG

REF. DRG. No.

SIGN. & DATE

INVENTORY NO.

TD 152-REV.03

A4 SIZE

COPYRIGHT AND CONFIDENTIAL
The Information on this document is the property of BHARAT HEAVY ELECTRICALS LIMITED
It must not be used directly or indirectly in any way detrimental to the Interest of the company.

CARBON STEEL CASTINGS-FUSION WELDING QUALITY

1.0 GENERAL

This specification governs the quality requirements of Carbon Steel Castings-Fusion Welding Quality.

2.0 APPLICATION

For pressure containing parts for high temperature service and of quality suitable for assembly with other castings or wrought steel parts by fusion welding.

3.0 CONDITION OF DELIVERY

Normalised / Normalised & tempered

Rough machining of the castings shall be carried out, unless otherwise specified in BHEL order/drawing.

Castings shall not be painted

4.0 COMPLIANCE WITH NATIONAL STANDARDS

There is no Indian standard covering this material. However, assistance has been derived from ASTM A 216-1993, Gr: WCC, in preparing this specification.

5.0 DIMENSIONS AND TOLERANCES

The castings shall be true to the pattern/drawing.

Holes for machining up to and including 50 mm in diameter are to be cast solid, unless otherwise stated in BHEL order/drawing.

Unless otherwise specified in BHEL order/drawing, untoleranced dimensions for the castings shall be as per tolerance class 4 of BHEL standard AA 023 04 02.

6.0 MANUFACTURE

The steel for the castings shall be made by basic electric furnace process or such other process as may be agreed to between BHEL and the manufacturer.

The steel shall be fully killed.

7.0 HEAT TREATMENT

Heat treatment shall be carried out at suitable temperatures to give the properties specified.

Any flame or arc cutting which may have to be done, shall be carried out before heat treatment.

Test pieces shall also be heat treated along with the castings they represent.

8.0 FINISH

All castings shall be properly fettled and dressed and all surfaces shall be thoroughly cleaned.

Machined surfaces shall have the surface finish as indicated in the drawing

9.0 FREEDOM FROM DEFECTS

Castings shall be free from defects such as porosity , blow holes, sand inclusion, shrinkage, cavities, hard spots, cold shuts, cracks, etc., which may adversely affect machining and utility of castings.

When it is necessary to remove risers by flame cutting, care shall be taken to make the cut at a sufficient distance from the body of the casting so as to prevent any defect being introduced into the casting due to local heating.

10.0 CHEMICAL COMPOSITIION

The melt analysis of steel and the permissible variation in the composition of the castings from the melt analysis shall be as specified below:

Element	Melt analysis, Percent, max	Permissible Variation, percent
*Carbon	0.25	0.02
Silicon	0.60	0.05
*Manganese	1.20	0.06
Sulphur	0.045	0.008
Phosphorus	0.040	0.008

Note: 1. In the interest of uniform welding, the concentration of the unspecified alloying elements shall not exceed the limits specified below. Whenever specified in the enquiry/order, the test results of these elements shall also be included in the test certificate. However, the manufacture shall ensure that these elements are within the limits specified.

Element	Percent, Max.
Copper	0.30
Nickel	0.50
Chromium	0.50
Molybdenum	0.20
Vanadlum	0.03
1. Total content of these unspecified elements	1.00

2. For each reduction of 0.01% below the specified maximum carbon content, an increase of 0.04% Mn above the maximum specified will be permitted up to a maximum of 1.40%.

11.0 TEST SAMPLES

Manufacturers shall carryout mechanical testing as per following sampling plan.

11.1 Unless otherwise specified for castings weighting up to 500 kg. piece weight one keel block, separately cast per melt per heat treatment batch shall be supplied according to the sketch given below:

11.2 Unless otherwise specified castings weighing more than 500 kg shall be provided with integrally cast keel block.

11.3 Retests shall be carried out as per IS : 8800

11.4 Keel blocks with proper identification and representative of the castings shall be supplied along with the consignment for testing at BHEL works.

DETAIL OF KEEL BLOCK

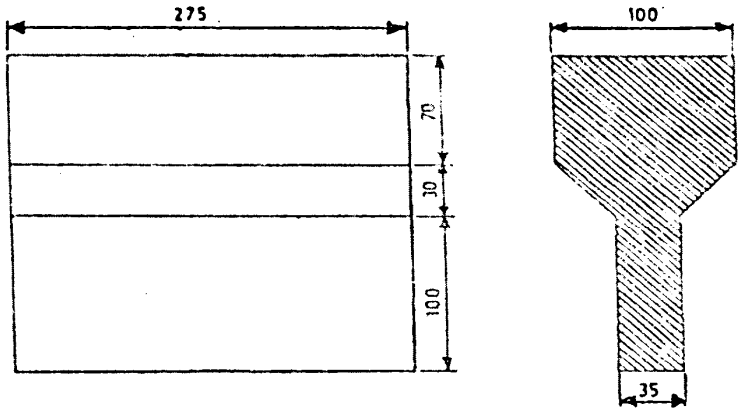

ALL DIMENSIONS IN mm

12.0 MECHANICAL PROPERTIES:

The test pieces, after being heat treated as per clause Cl.7.0 above, shall show the following properties:

12.1 Tensile

The test pieces shall show the following properties when tested in accordance with ASTM A 370

Tensile strength	:	485 - 655 N/mm^2
Yield strength	:	275 N/mm^2, min.
Elongation on 50mm gauge length	:	22 percent, min.
Reduction in area	:	35 percent, min.

12.2 Hardness (Brinell): for information only:

150 - 205 HB.

13.0 NON-DESTRUCTIVE TESTS:

The following tests shall be conducted:

1) Ultrasonic examination to BHEL standard AA 085 01 04 / AA 085 01 05
2) Liquid penetrate examination to BHEL standard AA 085 0131.
3) Magnetic particle examination to BHEL standard AA 085 01 33 and norms of acceptance as per BHEL standard AA 085 01 34.

Norms of acceptance shall be as specified in BHEL order/drawing

14.0 REPAIR OF CASTINGS

The manufacturer without the prior permission of BHEL shall not carry out repair of castings.

15.0 SCOPE OF THIRD PARTY INSPECTION:

Wherever, separate quality plan is not attached, the scope of third party inspection shall be as follows:

1. Review of supplier's declared chemical composition.
2. Selection of test samples for mechanical tests and witness of mechanical tests.
3. Witness of Non-destructive tests as applicable.
4. Review of HT charts.
5. Dimensional inspection.

16.0 TEST CERTIFICATES

Three copies of test certificates shall be supplied unless otherwise stated in BHEL order, preferably in the test certificate format annexed to this specification (Annexure -1).

In addition, the supplier shall ensure to enclose one copy of the test certificate along with their dispatch documents to facilitate quick clearance of the material.

The test certificate shall bear the following information:

i) Dimensional inspection.

ii) Detail of heat treatment

iii) Chemical composition & unspecified alloying elements whenever called for

iv) Results of mechanical tests

v) Results of NDT tests.

17.0 PACKING AND MARKING

Castings shall be suitably packed to prevent corrosion and damage during transit. Machined surfaces shall be properly protected with anticorrosive compounds. Each package or casting (when supplied separately) shall be legibly marked with the following information.

AA 195 11: C.S. Castings - F.W. Quality
BHEL Order No.
Consignment/Identification No.
Melt No.
Weight
Supplier's Name

18.0 REFERRED STANDARDS (Latest Publications Including Amendments):

1. AA 023 04 02	2. AA 085 01 04	3. AA 085 01 05	4. AA 085 01 31
5. AA 085 01 34	6. ASTM A 216	7. ASTM A 370	8. IS : 8800

ANNEXURE 1 - RECOMMENDED TEST CERTIFICATE FORMAT FOR CASTINGS

SUPPLIERS'S NAME AND ADDRESS

1. Customer :
2. TC No. & Date :
3. PO No. :
4. Process of Melting :
5. Deoxidisation Process
6. Cast No. & Date :
7. Batch No. :
8. Heat Code :
9. Spec.. No. :
10. Test Bar Size

11. CASTING COVERED BY T.C.

Sl. No.	Drawing No. & Item No.	Description	Quantity & Weight

12. CHEMICAL COMPOSITION (PERCENT)

Element	C	Si	Mn	S	P										
As per Spec. Min.															
As per Spec. Max..															
Actual Values.															

13. HEAT TREATMENT
(To be accompanied by Recorder Chart, wherever called for)

Condition	Temp.°C	Soaking Time, Hrs..	Cooling Medium

14. MECHANICAL PROPERTIES

	T.S. N/mm2	Y.S. 0.5/0.2% Proof N/mm2	% E on GL 5.65 SO	% R.A. Min	Hardness BHN Min. 3 Values	Impact Value, Joules	Bend	
As per Spec. Min.								
As per Spec. Max.								
Actual Values.								

15. Surface Finish (When called for in the order/drg)	
16. DIMENSIONAL INSPECTION	

17.NON-DESTRUCTIVE TESTS

Nature of Test	Acceptance Level	Instrument used	Range	Results	Any other details
Ultrasonic					
Radiographic					
Dye Penetrant/ Magnetic Particle					

18. OTHER TESTS, IF ANY (MICRO-Scopic, Hydraulic, Etc.)	
19. IDENTIFICATION ON CASTING AS PER CPS.	

We hereby certify that the items mentioned above have been tested and inspected in our presence and are found to be in accordance with the drawings, specifications and purchase order.

Signature & Seal of the Inspecting Officer
(Purchase Representative)

Date :

Signature and Seal of the Chief of Quality Control
Chief Metallurgist of the Supplier.

Date :

INSTRUCTION:

a) If steel is produced by LD or Oxygen process, Nitrogen content should be furnished and shall not exceed 0.009%
b) Test Certificates are to be furnished as per Purchase Order and Specifications, in A4 Size transparent paper.
c) All the entries including signature should be in black ink.
d) If testing is done by outside agencies, the original TCs shall be furnished.
e) The actual Test Certificate may run into more than one A4 size paper, if needed, to facilitate filling up of details.

GREY IRON CASTINGS - Gr: FG 200

1.0 GENERAL

This specification governs the quality requirements of Grey Iron Castings having a tensile strength of 200 N/mm^2.

2.0 APPLICATION

Suitable for general engineering purposes.

3.0 CONDITION OF DELIVERY

As cast or cast and stress relieved or rough machined or rough machined and stress relieved as specified in BHEL order/drawing.

Castings shall not be painted.

4.0 COMPLIANCE WITH NATIONAL / INTERNATIONAL STANDARD

Castings shall comply with the following national standards and also meet the requirements of this specification.

IS: 210-1993 (RA-2004) : Grey Iron Castings
Gr: FG 200

5.0 DIMENSION AND TOLERANCES

Castings shall be true to the pattern / drawing.

Holes for machining up to and including 50mm in diameter are to be cast solid, unless otherwise stated in BHEL order / drawing.

Unless otherwise specified in BHEL order/ drawing, untoleranced dimensions for the casings shall be as per tolerance class 5 of BHEL standard AA 023 04 02.

6.0 MANUFACTURE

The castings shall be cast from the metal melted or refined in any suitable metallurgical plant other than an iron ore smelting furnace.

All castings above five tonnes shall be mould cooled. Under mould cooling process, the mould should not be disturbed until the hottest portion of the casting cools down to 300^{0}C.

7.0 HEAT TREATMENT

Castings shall be artificially aged (stress relieving) by heating in a furnace to a temperature of 520 to 580^{0}C (recommended), whenever specified.

Test pieces shall also be heat treated along with the castings they represent.

COPYRIGHT AND CONFIDENTIAL
The Information on this document is the property of BHARAT HEAVY ELECTRICALS LIMITED
It must not be used directly or Indirectly in any way detrimental to the Interest of the company.

8.0 FINISH

All castings shall be properly fettled and dressed and all surfaces shall be thoroughly cleaned. Whenever specified, the machined surfaces shall have the surface finish as indicated in the drawing.

9.0 FREEDOM FROM DEFECTS

Castings shall sound, clean, free from defects such as porosity, blow holes, sand inclusions, shrinkage's, cavities, hard spots, cold shuts, cracks, etc. which may adversely affect machining and utility of castings.

10.0 CHEMICAL COMPOSITION

The composition of iron is left to the discretion of the manufacturer. (But limit of sulphur and phosphorus may be specified by BHEL, if desired).

In case of special castings, the detailed chemical composition shall be as agreed between BHEL and the manufacturer.

11.0 TEST SAMPLES:

11.1 **Provision of Test Bars :**

All the test bars shall be cast separately in sand moulds and the number of test bars required shall be as specified in clause 11.2 below. They shall be cast at the same time and from the same melt as the castings they represent..

The test bar material shall be identifiable with that of the castings represented.

When castings are subjected to heat treatment and the test bars shall be heat treated together with the castings they represent.

11.2 **Frequency Of Testing:**

The number of tests required for each melt or batch of castings shall be as laid in table 1 below.

Table 1: Number of Tests

Group	Mass of Individual Castings	Test Requirements	Test Samples
* 1	upto 12.5 kg	One test for every 500kg of castings or part thereof.	3
* 2	over 12.5 kg and upto 50 kg	One test for every 1 tonne of castings or part thereof.	3
* 3	over 50 kg and upto 500 kg	One test for every 2 tonnes of castings or part thereof.	3
* 4	over 500 kg and upto 1 tonne	One test for every 3 tonnes of castings or part thereof.	3
5	over 1 tonne	One test for every 4 tonnes of castings or part thereof or one test for every casting weighing 4 tonnes or more.	3

* In group 1, 2, 3 & 4 all castings represented by one test shall be poured from the same ladle or same heat as the bars provided for the test.

11.3 **Size of Test Bars:**

A test bar from which the tensile test piece is machined shall be cast as a uniform cylindrical bar of 30mm diameter. The tolerance on the diameter shall be + 2mm, - 0 mm.

The minimum length of the test bar shall be 230mm.

11.4 **Dimensions of Test Pieces:**

Test pieces shall conform to the dimensions as per IS:210.

Note: Test bars as specified above with proper identification and representative of the castings shall be supplied along with the consignment for testing at BHEL works.

12.0 MECHANICAL PROPERTIES

12.1 Tensile:

The test pieces prepared in accordance with clause 11.0 shall show a tensile strength of 200 N/mm^2, minimum, when tested in accordance with IS:1608.

12.2 Hardness (Brinell)

Hardness shall be measured on actual casting at three different places. The castings shall have a Brinell Hardness in the range of 160 to 220 HB, when tested in accordance with IS 1500.

13.0 OPTIONAL TESTS

If specified in the drawing/order, the following tests shall be conducted.

13.1 Non-destructive Test

Magnetic Particle Inspection:

Magnetic Particle Inspection as per BHEL standard AA 085 01 33 and norms of acceptance as per AA 085 01 34 at level 2.

13.2 Hydraulic:

Hydraulic test shall be conducted by the manufacturer. In case hydraulic testing as prescribed on the BHEL order/drawing is not carried out at the manufacturer's works, the same shall be carried out by BHEL after necessary machining. However, the manufacturer shall guarantee against any leakage when tested at BHEL's end.

Test pressure and duration of test shall be as specified in BHEL order/drawing.

14.0 RETEST

Retest shall be done as per IS:210.

15.0 REPAIR OF CASTINGS

Repair of castings shall not be carried out by the manufacturer without the prior permission of BHEL.

16.0 SCOPE OF THIRD PARTY INSPECTION:

Wherever, separate quality plan is not attached, the scope of third party inspection shall be as follows:

1. Review of supplier's declared chemical composition.
2. Selection of test samples for mechanical tests and witness of mechanical tests.
3. Witness of Non-destructive tests as applicable.
4. Review of HT charts.
5. Dimensional inspection.

17.0 TEST CERTIFICATES

Three copies of test certificates shall be supplied unless otherwise stated in order, preferably in the test certificate format annexed to this specification (Annexure -1).

In addition, the supplier shall ensure to enclose one copy of the test certificate alongwith their dispatch documents to facilitate quick clearance of the material.

The following details shall be furnished in the test certificate:

1. Dimensional inspection
2. Detail of heat treatment
3. Hardness value
4. NDT
5. Optional tests called for in the drawing/order.

18.0 PACKING AND MARKING

Castings shall be suitably packed to prevent corrosion and damage during transit. Machined surfaces shall be properly protected with anticorrosive compounds. Each package or casting (when supplied separately) shall be legibly marked with the following information.

AA 19702: Grey Iron Castings-Gr: FG 200
BHEL Order No.
Consignment/Identification No.
Melt No.
Weight
Supplier's Name

19.0 REFERRED STANDARDS (Latest Publications Including Amendments):

1. IS: 210 2. IS:1500 3. IS:1608 4. AA 023 04 02

4. AA 085 01 33 5. AA 085 01 34

ANNEXURE 1 - RECOMMENDED TEST CERTIFICATE FORMAT FOR CASTING

SUPPLIERS'S NAME AND ADDRESS

1. Customer :
2. TC No. & Date :
3. PO No. :
4. Process of Melting :
5. Deoxidisation Process
6. Cast No. & Date :
7. Batch No. :
8. Heat Code :
9. Spec., No. :
10. Test Bar Size

11. CASTING COVERED BY T.C.

Sl. No.	Drawing No. & Item No.	Description	Quantity & Weight

12. CHEMICAL COMPOSITION (PERCENT)

Element	C	Si	Mn	S	P										
As per Spec. Min.															
As per Spec. Max.															
Actual Values.															

13. HEAT TREATMENT
(To be accompanied by Recorder Chart, wherever called for)

Condition	Temp.°C	Soaking Time, Hrs.,	Cooling Medium

14. MECHANICAL PROPERTIES

	T.S. N/mm2	Y.S. 0.5/0.2% Proof N/mm2	% E on GL 5.65 SO	% R.A. Min	Hardness BHN Min. 3 Values	Impact Value, Joules	Bend	
As per Spec. Min.								
As per Spec. Max.								
Actual Values.								

15. Surface Finish (When called for in the order/drg)	
16. DIMENSIONAL INSPECTION	

17. NON-DESTRUCTIVE TESTS

Nature of Test	Acceptance Level	Instrument used	Range	Results	Any other details
Ultrasonic					
Radiographic					
Dye Penetrant/ Magnetic Particle					

18. OTHER TESTS, IF ANY (MICRO-Scopic, Hydraulic, Etc.)	
19. IDENTIFICATION ON CASTING AS PER CPS.	

We hereby certify that the items mentioned above have been tested and inspected in our presence and are found to be in accordance with the drawings, specifications and purchase order.

Signature & Seal of the Inspecting Officer
(Purchase Representative)

Signature and Seal of the Chief of Quality Control
Chief Metallurgist of the Supplier.

Date :

Date :

INSTRUCTION :

a) If steel is produced by LD or Oxygen process, Nitrogen content should be furnished and shall not exceed 0.009%
b) Test Certificates are to be furnished as per Purchase Order and Specifications, in A4 Size transparent paper.
c) All the entries including signature should be in black ink.
d) If testing is done by outside agencies, the original TCs shall be furnished.
e) The actual Test Certificate may run into more than one A4 size paper, if needed, to facilitate filling up of details.

GREY IRON CASTINGS - Gr: FG 260

1.0 GENERAL

This specification governs the quality requirements of Grey Iron Castings having a tensile strength of 260 N/mm^2.

2.0 APPLICATION

Suitable for general engineering purposes.

3.0 CONDITION OF DELIVERY

As cast or cast and stress relieved or rough machined or rough machined and stress relieved as specified in BHEL order/drawing.

Castings shall not be painted.

4.0 COMPLIANCE WITH NATIONAL / INTERNATIONAL STANDARD

Castings shall comply with the following national standards and also meet the requirements of this specification.

IS: 210-1993 : Grey Iron Castings
Gr: FG 260

5.0 DIMENSION AND TOLERANCES

Castings shall be true to the pattern / drawing.

Holes for machining up to and including 50mm in diameter are to be cast solid, unless otherwise stated in BHEL order / drawing.

Unless otherwise specified in BHEL order/ drawing, untoleranced dimensions for the casings shall be as per tolerance class 5 of BHEL standard AA 023 04 02.

6.0 MANUFACTURE

The castings shall be cast from the metal melted or refined in any suitable metallurgical plant other than an iron ore smelting furnace.
All castings above five tonnes shall be mould cooled. Under mould cooling process, the mould should not be disturbed until the hottest portion of the casting cools down to 300^{0}C.

7.0 HEAT TREATMENT

Castings shall be artificially aged (stress relieving) by heating in a furnace to a temperature of 520 to 580^{0}C (recommended), whenever specified.

Test pieces shall also be heat treated along with the castings they represent.

COPYRIGHT AND CONFIDENTIAL
The Information on this document is the property of BHARAT HEAVY ELECTRICALS LIMITED
It must not be used directly or Indirectly in any way detrimental to the Interest of the company.

8.0 FINISH

All castings shall be properly fettled and dressed and all surfaces shall be thoroughly cleaned. Whenever specified, the machined surfaces shall have the surface finish as indicated in the drawing.

9.0 FREEDOM FROM DEFECTS

Castings shall sound, clean, free from defects such as porosity, blow holes, sand inclusions, shrinkage's, cavities, hard spots, cold shuts, cracks, etc. which may adversely affect machining and utility of castings.

10.0 CHEMICAL COMPOSITION

The composition of iron is left to the discretion of the manufacturer. (But limit of sulphur and phosphorus may be specified by BHEL, if desired).

In case of special castings, the detailed chemical composition shall be as agreed between BHEL and the manufacturer.

11.0 TEST SAMPLES:

11.1 Provision of Test Bars :

All the test bars shall be cast separately in sand moulds and the number of test bars required shall be as specified in clause 11.2 below. They shall be cast at the same time and from the same melt as the castings they represent..

The test bar material shall be identifiable with that of the castings represented.

When castings are subjected to heat treatment and the test bars shall be heat treated together with the castings they represent.

11.2 Frequency Of Testing:

The number of tests required for each melt or batch of castings shall be as laid in table 1 below.

Table 1: Number of Tests

Group	Mass of Individual Castings	Test Requirements	Test Samples
* 1	upto 12.5 kg	One test for every 500kg of castings or part thereof.	3
* 2	over 12.5 kg and upto 50 kg	One test for every 1 tonne of castings or part thereof.	3
* 3	over 50 kg and upto 500 kg	One test for every 2 tonnes of castings or part thereof.	3
* 4	over 500 kg and upto 1 tonne	One test for every 3 tonnes of castings or part thereof.	3
5	over 1 tonne	One test for every 4 tonnes of castings or part thereof or one test for every casting weighing 4 tonnes or more.	3

* In group 1, 2, 3 & 4 all castings represented by one test shall be poured from the same ladle or same heat as the bars provided for the test.

11.3 **Size of Test Bars:**

A test bar from which the tensile test piece is machined shall be cast as a uniform cylindrical bar of 30mm diameter. The tolerance on the diameter shall be + 2mm, - 0 mm.

The minimum length of the test bar shall be 230mm.

11.4 **Dimensions of Test Pieces:**

Test pieces shall conform to the dimensions as per IS:210.

Note: Test bars as specified above with proper identification and representative of the castings shall be supplied along with the consignment for testing at BHEL works.

12.0 MECHANICAL PROPERTIES

12.1 Tensile:

The test pieces prepared in accordance with clause 11 shall show a tensile strength of 260 N/mm^2, minimum, when tested in accordance with IS:1608.

12.2 Hardness (Brinell)

Hardness shall be measured on actual casting at three different places. The castings shall have a Brinell Hardness in the range of 180 to 230 HB, when tested in accordance with IS 1500.

13.0 OPTIONAL TESTS

If specified in the drawing/order, the following tests shall be conducted.

13.1 Non-destructive test

Magnetic Particle Inspection:

Magnetic Particle Inspection as per BHEL standard AA 085 01 33 and norms of acceptance as per AA 085 01 34 at level 2.

13.2 Hydraulic:

Hydraulic test shall be conducted by the manufacturer. In case hydraulic testing as prescribed on the BHEL order/drawing is not carried out at the manufacturer's works, the same shall be carried out by BHEL after necessary machining. However, the manufacturer shall guarantee against any leakage when tested at BHEL's end.

Test pressure and duration of test shall be as specified in BHEL order/drawing.

14.0 RETEST

Retest shall be done as per IS:210.

15.0 REPAIR OF CASTINGS

Repair of castings shall not be carried out by the manufacturer without the prior permission of BHEL.

CS-655

16.0 SCOPE OF THIRD PARTY INSPECTION:

Wherever, separate quality plan is not attached, the scope of third party inspection shall be as follows:

1. Review of supplier's declared chemical composition.
2. Selection of test samples for mechanical tests and witness of mechanical tests.
3. Witness of Non-destructive tests as applicable.
4. Review of HT charts.
5. Dimensional inspection.

17.0 TEST CERTIFICATES

Three copies of test certificates shall be supplied unless otherwise stated on order, preferably in the test certificate format annexed to this specification (Annexure -1).

In addition, the supplier shall ensure to enclose one copy of the test certificate alongwith their dispatch documents to facilitate quick clearance of the material.

The following details shall be furnished in the test certificate:

1. Dimensional inspection
2. Detail of heat treatment
3. Hardness value
4. NDT
5. Optional tests called for in the drawing/order.

18.0 PACKING AND MARKING

Castings shall be suitably packed to prevent corrosion and damage during transit. Machined surfaces shall be properly protected with anticorrosive compounds. Each package or casting (when supplied separately) shall be legibly marked with the following information.

AA 19703: Grey Iron Castings-Gr: FG 260
BHEL Order No.
Consignment/Identification No.
Melt No.
Weight
Supplier's Name

19.0 REFERRED STANDARDS (Latest Publications Including Amendments):

1. IS: 210 2. IS:1500 3. IS:1608 4. AA 023 04 02

4. AA 085 01 33 5. AA 085 01 34

ANNEXURE 1 - RECOMMENDED TEST CERTIFICATE FORMAT FOR CASTING

SUPPLIERS'S NAME AND ADDRESS

1. Customer :
2. TC No. & Date :
3. PO No. :
4. Process of Melting :
5. Deoxidisation Process
6. Cast No. & Date :
7. Batch No. :
8. Heat Code :
9. Spec., No. :
10. Test Bar Size

11. CASTING COVERED BY T.C.

Sl. No.	Drawing No. & Item No.	Description	Quantity & Weight

12. CHEMICAL COMPOSITION (PERCENT)

Element	C	Si	Mn	S	P										
As per Spec. Min.															
As per Spec. Max..															
Actual Values.															

13. HEAT TREATMENT
(To be accompanied by Recorder Chart, wherever called for)

Condition	Temp.°C	Soaking Time, Hrs..	Cooling Medium

14. MECHANICAL PROPERTIES

	T.S. N/mm2	Y.S. 0.5/0.2% Proof N/mm2	% E on GL 5.65 SO	% R.A. Min	Hardness BHN Min. 3 Values	Impact Value, Joules	Bend	
As per Spec. Min.								
As per Spec. Max.								
Actual Values.								

15. Surface Finish (When called for in the order/drg)	
16. DIMENSIONAL INSPECTION	

17.NON-DESTRUCTIVE TESTS

Nature of Test	Acceptance Level	Instrument used	Range	Results	Any other details
Ultrasonic					
Radiographic					
Dye Penetrant/ Magnetic Particle					

18. OTHER TESTS, IF ANY (MICRO-Scopic, Hydraulic, Etc.)	
19. IDENTIFICATION ON CASTING AS PER CPS.	

We hereby certify that the items mentioned above have been tested and inspected in our presence and are found to be in accordance with the drawings, specifications and purchase order.

Signature & Seal of the Inspecting Officer
(Purchase Representative)

Date :

Signature and Seal of the Chief of Quality Control
Chief Metallurgist of the Supplier.

Date :

INSTRUCTION:

a) If steel is produced by LD or Oxygen process, Nitrogen content should be furnished and shall not exceed 0.009%
b) Test Certificates are to be furnished as per Purchase Order and Specifications, in A4 Size transparent paper.
c) All the entries including signature should be in black ink.
d) If testing is done by outside agencies, the original TCs shall be furnished.
e) The actual Test Certificate may run into more than one A4 size paper, if needed, to facilitate filling up of details.

RST ANGLE PROJECTION

ALL DIMENSIONS ARE IN mm.

REV.	DATE	ALTERED	REV.	DATE	ALTERED	REV.	DATE	ALTERED
		CHECKED			CHECKED			CHECKED
		APPROVED			APPROVED			APPROVED

DESCRIPTION	S.NO.	DRAWING NO.	MATL. CODE / MATL. SPECN.	UNIT WT.(Kg.) / QTY.
M.S.B.LINER ST.03 HY-19.06	4	3-61-276-00050	AA19702	39.32 / 1
M.S.B.LINER HY-19.03	3	3-61-276-00051	AA19702	32.28 / 1
M.S.B.LINER HY-19.02	2	3-61-276-00049	AA19702	25.02 / 1
M.S.B. LINER HY-19.01	1	3-61-276-00046	AA19702	42.38 / 6

TYPE OF PRODUCT OR NAME OF CUSTOMER/PROJECT

BHARAT HEAVY ELECTRICALS LTD.
VARANASI

	NAME	SIGN	DATE
DRN.	D.BASAK		20.12.07
CKD.	S.TEWARI		20.12.07
APPD.	V.KUMAR		20.12.07

NO.OF VAR.

DEPT. P&D

CODE

NTS

WEIGHT(K.G.)

REF.TO ASSY.DRG.

ITEM NO.

NO.OF ITEM

TITLE

M.S.B. LINERS SET

DRAWING NO. HY-019.C

REV. 00

SHT.NO. 01 NO.OF SHT. 01

REF. TO HY0230261 FOR UNSPECIFIED TOLERANCES.

SIGN. & DATE

INVENTORY NO.

REF. DRG. NO. | CON. | ER NO.

THE INFORMATION ON THIS DOCUMENT IS THE PROPERTY OF BHARAT HEAVY ELECTRICALS LIMITED. IT MUST NOT BE USED DIRECTLY OR INDIRECTLY IN ANY WAY DETRIMENTAL TO THE INTEREST OF THE COMPANY.

CONFIDENTIAL

B.H.E.L. H.E.R.P. VARANASI

QUALITY PLAN

AA-19703 G.C.I.Gr.25 - Fully Machined

Sl.No.	Component/Operation	Characteristic Checked	Type/Method of Check	Extent of Check	Reference Documents	Acceptence Norm	Format of Record	Agency P	Agency W	Agency V	Remarks
1.0	Casting	i. Composition	Chemical Analysis	1 Sample per melt	Tech.Specn. AA19703	Tech.Specn. AA19703	T.C.	3	-	2	
		ii. Heat Treatment	H.T.Chart	1 Sample per H.T.batch	-do-	-do-	H.T.Chart	3	-	2	
		iii.Mechanical Properties	Mechanical Test	-do-	-do-	-do-	T.C.	3	-	2	
		iv. Surface Defects	Visual	100%	Free from Defects	Free from Defects	Inspection Report	3	2	-	
		v. Dimensions	Measurement	100% by VEND Random 10% by BHEL	Drawing	Drawing	Dimensional Report	3/2	-	2	
2.0	In Process (After machining)	i. Dimensions	Measurement	100% by VEND Random 10% by BHEL	Drawing	Drawing	Dimensional Report	3/2	-	2	
		ii. Tapped Holes check	with Plug Guage	100%	----	----	--do--	3/2	-	2	
3.0	Final Inspection	i. Cleanliness	Visual	100%	----	----	Inspection Report	3	2	-	
		ii. Identification & Marking	Punching Heat No Po.No.,Drg.No.& Inspector Seal	100%	----	----	Inspection Report	3	2	-	
		iii.Prevention (from rust)	Visual	100%	----	----	--do--	3	2	-	

Q.P.No	RV/C&F/09	Approved By	S.C.RAI
DATE	18/05/94	Signature & Date	H.S. PANDEY MANAGER (P & T) BHEL-HERP VARANASI
PageNo	1 of 1	BHEL	

LEGEND :
P = PERFORM
W = WITNESS
V = VERIFY
3 = VENDOR/SUPPLIER
2 = BHEL

TC = TEST CERTIFICATE

HT = HEAT TREATMENT

B.H.E.L. H.E.R.P. VARANASI

QUALITY PLAN

AA-19702 G.C.I. Gr. 20 FULLY MACHINED

Sl.No.	Component/Operation	Characteristic Checked	Type/Method of Check	Extent of Check	Reference Documents	Acceptence Norm	Format of Record	Agency P	Agency W	Agency V	Remarks
1.0	Casting	i. Composition	Chemical Analysis	1 Sample per melt	Tech.Specn. AA19702	Tech.Specn. AA19702	T.C.	3	-	2	
		ii. Heat Treatment	H.T.Chart	1 Sample per melt	-do-	-do-	H.T.Chart	3	-	2	
		iii. Mechanical Properties	Mechanical Test	-do-	-do-	-do-	T.C.	3	-	2	
		iv. Surface Defects	Visual	100%	Free from defects	Free from defects	Inspection Report	3	2	-	
		v. Dimensions	Measurement	100% by VEND Random 10% by BHEL	Drawings	Drawings	Dimensional Report	3/2	-	2	
2.0	In Process (After machining)	i. Dimensions	Measurement	100% by VEND Random 10% by BHEL	Drawings	Drawings	-do-	3/2	-	2	
		ii. Tapped Holes Check	with plug gauge	100%	---	---	-do-	3/2	-	2	
3.0	Final Inspection	i. Cleanliness	Visual	100%	---	---	Inspection Report	3	2	-	
		ii. Identification & Marking	Punching Heat No Po.No.,Drg.No.& Inspector Seal	100%	---	---	-do-	3	2	-	
		iii. Prevention (from rast)	Visual	100%	---	---	-do-	3	2	-	

Q.P.No	RV/C&F/12	Approved By	S.C.RAI
DATE	20/05/94	Signature & Date	
PageNo	1 of 1	BHEL	

LEGEND :
P = PERFORM
W = WITNESS
V = VERIFY
3 = VENDOR/SUPPLIER
2 = BHEL

TC = TEST CERTIFICATE
HT = HEAT TREATMENT

B. P. Singh
Sr. Manager (P & D)
B. H. E. L. – H. E. R. P.
Shivpur, Vara

BHARAT HEAVY ELECTRICALS LIMITED

Ramachandrapuram, Hyderabad – 502 032, INDIA

QW – 482 WELDING PROCEDURE SPECIFICATION (WPS)

Welding Procedure Specification No.: WE006 **Date: 02.08.86** **Supporting PQR No.:** 516, **Dt** : 11.05.10

Revision No.: 07 **Date:** 24.04.2016

Welding Process (es) : *SMAW* **Type (s) :** *MANUAL*

JOINTS (QW 402)

Joint Design: *As per manufacturing drawing (groove/fillet)*

Root Spacing : *As per manufacturing drawing*

Backing (Yes) : *for double side butt welds and backing strip joints*

(No) : *for single side welds*

Backing Material (Type) : *Base metal / Weld metal*

Metal: *Yes* **Non-Fusing Metal**: *No*

Retainer: *No*

BASE METALS (QW – 403)

P. No. *: 1* **Group No. :** *1 & 2* **TO** **P. No.:** *1* **Group No.:** *1 & 2*

OR

Specification type & grade: -------- **to** Specification type & grade : -------

OR

Chemical Analysis & Mechanical Properties: --- to Chemical Analysis & Mechanical Properties: ----

Thickness Range :

Base Metal : **Groove:** *5.0 mm to 38 mm* ** **Fillet :** *all sizes*

Deposited pass thickness > 13mm – Not Permitted

Other : None

Filler Metals (QW – 404)

	SMAW
Spec. No. (SFA)	*5.1*
AWS NO (CLASS)	A5.1 (*E 7018*)
F. No.	4
A. No.	*1*
Size of Filler Metals	*Dia 2.5, 3.15, 4.0, 5.0mm*
Filler Metal Product Form	N.A
Supplemental Filler Metal	N.A
Deposited Weld Metal Thickness Range : Groove: Fillet:	38 *mm Max.* *38 mm Max Throat*
Electrode Flux (Class)	*Basic*
Consumable Insert	*No*
Max. Bead Thickness	5 *mm*

** Note : For Unequal thicknesses base material thickness qualified upto 50mm and weld metal thickness limited to 38mm max.

Rev : 07 – Note added regarding base material thickness

N.A – Not Applicable

POSITIONS (QW-405)

Position(s) Groove : *ALL POSITIONS*
Welding Progression: *UP for Vertical*
Down –Not permitted
Position (s) Fillet: *ALL*
Other : None

POSTWELD HEAT TREATMENT (QW-407)

Not Permitted

Temperature Range: *NA*

Time Range: *NA*
Other : *None*

PREHEAT (QW-406)

Preheat Temp Min: *10 º C min for < 31mm*
100 º C min for 31mm and above
Interpass Temp Max: *300 º C*
Preheat Maintenance: *Minimum specified temperature for every restart*
Other : None

GAS (QW - 408)

	Percentage Composition		
	Gas(es)	**Mixture**	**Flow Rate**
Shielding :	N.A	-	-
Trailing :	N.A	-	-
Backing :	N.A	-	-

Other : None

ELECTRICAL CHARACTERISTICS (QW-409)

Weld Pass (es)	Process	Filler Metal		Current type & Polarity	Amps (Range)	Wire feed speed	Energy or Power (Range)	Volts (Range)	Travel speed	Other
		Classifi-cation	Diam-eter							
Root& Subs-equent as requi-red	*SMAW*	*E 7018*	*2.5mm*	*DCEP*	*60 – 90A*	N.A	N.A	*22-34V*	N.A	*String for horizontal; Others Weave (Max 3 times Electrode Core Dia)*
	-do-	*-do-*	*3.15mm*	*-do-*	*100-150A*	*-do-*	*-do-*	*-do-*	*-do-*	
	-do-	*-do-*	*4.0mm*	*-do-*	*150-200A*	*-do-*	*-do-*	*-do-*	*-do-*	
		-do-	*5.0mm*	*-do-*	*200-260A*	*-do-*	*-do-*	*-do-*	*-do-*	

Pulsing Current : *N.A*

Heat Input : *N.A*

Tungsten Electrode Size and Type : *N.A*

Mode of Metal Transfer for GMAW (FCAW): *N.A*

Others **:** None

TECHNIQUE (QW-410)

String or Weave Bead: *string and/or weave*

Orifice or Gas Cup Size : *N.A*

Initial / Interpass Cleaning : *chipping / brushing / grinding*

Method of Back Gouging: *grinding/gouging if required*

Oscillation *:* *N.A*

Contact tube to work distance : N.A

Multiple or Single Pass : *Multiple pass*

Multiple or Single Electrodes : *Single electrode*

Closed to out chamber : *N.A*

Peening : *Not allowed*

Use of thermal processes : *N.A*

Other : *Clean weld area to remove oil, rust, grease, etc. prior to welding.*

Prepared by

Approved by

Welding Engineer

HEAD / Welding Engg

N.A – Not Applicable