Bharat Heavy Electricals Limited

Heavy Equipment Repair Plant

Tarna Shivpur Varanasi-221003
website: https://herp.bhel.com

Enquiry Number : **E-RC-304-23-0712-61-1** Date : **29/Mar/2024**

Enquiry For Material :-

Sl No	Material Description	Material Code	Quantity	Unit
1	L.J. HOUSING (HY-6.0 F) - ROUGH M/CD FORGING AS PER DRG. 36137690010/08 WITH MATL AS PER SPECN. AA19332/10	RV1930132018	150.0	NOS
2	JOURNAL SHAFT (HY-33.F) - ROUGH M/CD FORGING AS PER DRG. 36137690011/03 WITH MATL AS PER SPECN. AA19332/10	RV1930132026	80.0	NOS
3	L.J. HOUSING (HY-312.A.02) - ROUGH MACHINED FORGING AS PER DRG. HY-312.A.02.F WITH MATL AS PER SPECN. AA19332/10	RV1930132310*	50.0	NOS
4	JOURNAL SHAFT (HY-312.A.01) - ROUGH M/CD FORGING AS PER DRG. 36100090173/01 WITH MATL AS PER SPECN. AA19332/10	RV1930132400	50.0	NOS
5	U.J. HOUSING (HY-312.A.05.X) - ROUGH M/CD FORGING AS PER DRG. 36100090168/01 WITH MATL AS PER SPECN. AA19332/10	RV1930132427	45.0	NOS
6	UPPER JOURNAL HOUSING (HY-902.03.F) - ROUGH M/CD FORGING AS PER DRG. NO. 36108802393/01 WITH MATL AS PER SPECN. AA19332/10	RV1930132677	25.0	NOS
7	LOWER JOURNAL HOUSING (HY-902.04.F) - ROUGH M/CD FORGING AS PER DRG. 36108802392/03 WITH MATL. AS PER SPECN. AA19332/10	RV1930132689	30.0	NOS
8	JOURNAL SHAFT (HY-902.01) - ROUGH M/CD FORGING AS PER DRG. NO. 36108802391/01 WITH MATL AS PER SPECN. AA19332/10	RV1930132697	15.0	NOS
9	R/MCD FORGING OF JOURNAL SHAFT(HY-1101.09.F) AS PER DRG. 36100490184/01 WITH MATL. AS PER SPECN. AA19332/10	RV1930132824	5.0	NOS
10	R/MCD FORGING OF TRUNION SHAFT(HY-1102.01) AS PER DRG. 46100490249/00 WITH MATL. AS PER SPECN. AA19332/10(BHEL HYD MATL CODE BA9413253250)	RV1930132832	5.0	NOS

Remarks

Remarks
1. THIS INDENT HAS BEEN RAISED FOR ENTERING INTO FRAMEWORK AGREEMENT WITH VENDORS FOR FORGING. SEPARATE INDENTS WILL BE GIVEN TIME TO TIME AS PER REQUIREMENT FOR PLACING THE PO UNDER THIS RC. ITEM QUANTITY MENTIONED IN THE INDENT IS TENTATIVE & IT MAY INCREASE OR DECREASE AS PER OUR FINAL REQUIREMENT.
2. RATES OF ITEMS AGAINST FA WILL BE FIRM & VALID FOR ORDERING FOR A PERIOD OF ONE YEAR FROM THE DATE OF AGREEMENT. PRICE VARIATION CLAUSE (PVC) IS NOT ACCEPTABLE.AFTER FINALIIZATION OF RATE CONTRACT, PO QUANTITY WILL BE PLACED AS PER REQUIREMENT.

(B) SUPPLY CONDITION :
1. ITEM TO BE SUPPLIED AT BHEL HERP STORES.
2. PRE-DESPATCH INSPECTION WILL BE CARRIED OUT AT PARTY'S WORKS BY BHEL REPRESENTATIVE AS PER QUALITY PLAN RV/C&F/21 REV-10

(C) TECHNICAL DELIVERY CONDITION :
1. MATERIAL SHOULD BE AS PER SPEC. MENTIONED IN THE DECRIPTION/DRG.
2. DIMENSIONS AND TOLERANCES TO BE MAINTAINED AS PER DRG.
3. HEAT TREATMENT CHART IS REQUIRED.
4. DIMENSION REPORT IS REQUIRED.
5. ALL TECHNICAL REQUIREMENT MENTIONED IN THE DRG./SPEC & QP MUST BE STRICTLY FULFILLED.
6. VENDOR SHOULD PROCURE RAW MATERIAL FOR FORGING FROM BHEL APPROVED SOURCES AS PER PMD SA01

(D) TEST CERTIFICATE :
1) REQUIRED FOR CHEMICAL & MECHANICAL PROPERTIES FOR EACH HEAT No.
2) TEST RESULTS OF UST AND MPI FOR FOR ITEM SPEC. AA19332

(E) GUARANTEE CERTIFICATE: REQUIRED FOR 24 MONTHS AGAINST ANY MANUFACTURING DEFECTS FROM THE DATE OF RECIPT AT BHEL HERP.

(F) PACKING INSTRUCTIONS: ALL ITEM SHOULD BE SUPPLIED IN LOOSE CONDITION WITH PROPER STACKING AT VEHICLE.

(G) RATE CONTRACT VALIDITY: FOR 1 (ONE) YEAR FROM THE RC-PO DATE.

(H) SPECIAL REMARKS:

1. DUE TO LARGE QUANTITY & VALUE OF MILL SPARES, MORE THAN ONE SOURCE SHOULD BE CONSIDERED FOR MEETING OUR REQUIREMENT.
2. ITEM WISE MAXIMUM QTY IN EACH LOT (WHICH MAY BE REQUIRED IN A PARTICULAR ORDER) WILL BE AS MENTIONED IN ANNEXURE-- RC-LOT-BA02/02.
3 .DELIVERY IS WITHIN 04 MONTHS FROM DATE OF PO FOR FIRST LOT. THERE WILL BE A GAP OF 01 MONTH BETWEEN TWO CONSECUTIVE LOTS.EARLY DELIVERY IS ACCEPTABLE.

(I) SPLITTING CONDITION:

1. THERE WILL BE NO DISTRIBUTION IN ITEMS NO RV1930132824, RV1930132832, RV1930132689, RV1930132697, RV1930132677.

2. THERE WILL BE SPLITTING BETWEEN TWO VENDORS IN THE RATIO OF L1:L2::60:40 IN ITEMS NO RV1930132026, RV1930132310
RV1930132400, RV1930132427.

3. THERE WILL BE SPLITTING BETWEEN THREE VENDORS IN THE RATIO OF L1:L2:L3::50:35:15 IN ITEMS NO RV1930132018.

4. THE EQUATED L1 RATES OF ITEMS WOULD BE COUNTER OFFERED TO THE NEXT HIGHER BIDDER IN ORDER OF THEIR RANKING AND THE QUANTITY WOULD BE GIVEN TO THE BIDDER WHO ACCEPT THE EQUATED L1 PRICE ON THE BASIS OF THEIR RANKING IN THE PRICE BID.

5. IF NONE OF THE OTHER BIDDERS ACCEPT THE L1 PRICE, THEN THE ENTIRE QUANTITY OF THE TENDER WOULD BE ORDERED TO THE ORIGINAL L1 PARTY ONLY.

6. IN NO CASE, H1 BIDDER SHALL BE COUNTER OFFERED EQUATED L1 RATE.

7. AT ANY POINT OF TIME OR IF THE PERFORMANCE OF ANY VENDOR IS FOUND UNSATISFACTORY, THE ABOVE DISTRIBUTION RATIO MAY BE CANCELLED OR CHANGED BY BHEL AND ITEMS MAY BE PROCURED FROM PERFORMING VENDORS.

(J) REVERSE AUCTION:

1. BHEL SHALL BE RESORTING TO REVERSE AUCTION (RA) (GUIDELINES AS AVAILABLE ON WWW.BHEL.COM) FOR THIS TENDER. RA SHALL BE CONDUCTED AMONG ALL THE TECHNO-COMMERCIALLY QUALIFIED BIDDERS. PRICE BIDS OF ALL TECHNO-COMMERCIALLY QUALIFIED BIDDERS SHALL BE OPENED AND SAME SHALL BE CONSIDERED AS INITIAL BIDS OF BIDDERS IN RA. IN CASE ANY BIDDER (S)DO(ES) NOT PARTICIPATE IN ONLINE REVERSE AUCTION, THEIR PRICE BID ALONG WITH APPLICABLE LOADING, IF ANY, SHALL BE CONSIDERED FOR RANKING.

IF ANY OF THE VENDORS DO NOT ACCEPT THE ABOVE POINT, THEIR OFFER MAY BE LIABLE FOR REJECTION WITHOUT INTIMATION.

2. RA WILL BE CARRIED OUT ON INDIVIDUAL LINE ITEM WISE BASIS COVERED IN THE ENQUIRY AND RATE CONTRACT SHALL BE DONE ACCORDINGLY (ITEM WISE).

(K). AS THE ENQUIRY EVALUATION IS ON ITEM WISE BASIS , BIDDERS ARE ALLOWED TO QUOTE FOR PARTIAL LINE ITEMS/SELECTED LINE
ITEMS OF ENQUIRY.

(L) CLAUSE FOR INTEGRITY PACT (IP) SHALL BE AS PER ANNEXURE-1 & 2 ATTACHED. BIDDER SHALL SUBMIT THE ATTACHED ANNEXURE-1 FILLED, SIGNED AND STAMPED.

(M) OTHER TERMS & CONDITIONS OF THIS ENQUIRY SHALL BE AS PER ATTACHED GTC.

ANNEXURE--RC-LOT-BA02/02

S.NO	MaterialCode	Description	RC QTY	MAX LOT
1	RV1930132018	L.J. HOUSING (HY-6.0 F) - ROUGH M/CD FORGING AS PER DRG. 36137690010/08 WITH MATL AS PER SPECN. AA19332/10	150	30
2	RV1930132026	JOURNAL SHAFT (HY-33.F) - ROUGH M/CD FORGING AS PER DRG. 36137690011/03 WITH MATL AS PER SPECN. AA19332/10	80	20
3	RV1930132824	R/MCD FORGING OF JOURNAL SHAFT(HY-1101.09.F) AS PER DRG. 36100490184/01 WITH MATL. AS PER SPECN. AA19332/10	5	5
4	RV1930132832	R/MCD FORGING OF TRUNION SHAFT(HY-1102.01) AS PER DRG. 46100490249/00 WITH MATL. AS PER SPECN. AA19332/10(BHEL HYD MATL CODE BA9413253250)	5	5
5	RV1930132689	LOWER JOURNAL HOUSING (HY-902.04.F) - ROUGH M/CD FORGING AS PER DRG. 36108802392/03 WITH MATL. AS PER SPECN. AA19332/10	30	10
6	RV1930132310*	L.J. HOUSING (HY-312.A.02) - ROUGH MACHINED FORGING AS PER DRG. HY-312.A.02.F WITH MATL AS PER SPECN. AA19332/10	50	20
7	RV1930132400	JOURNAL SHAFT (HY-312.A.01) - ROUGH M/CD FORGING AS PER DRG. 36100090173/01 WITH MATL AS PER SPECN. AA19332/10	50	20
8	RV1930132427	U.J. HOUSING (HY-312.A.05.X) - ROUGH M/CD FORGING AS PER DRG. 36100090168/01 WITH MATL AS PER SPECN. AA19332/10	45	20
9	RV1930132697	JOURNAL SHAFT (HY-902.01) - ROUGH M/CD FORGING AS PER DRG. NO. 36108802391/01 WITH MATL AS PER SPECN. AA19332/10	15	5
10	RV1930132677	UPPER JOURNAL HOUSING (HY-902.03.F) - ROUGH M/CD FORGING AS PER DRG. NO. 36108802393/01 WITH MATL AS PER SPECN. AA19332/10	25	10

PQR

Sl. No.	BHEL Terms	Supplier's ComplianceYES/NO
1	**Offers are accepted from:**	
1.a	Only Manufacturer's Offers shall be considered for the Tender Enquiry.	
2	**Supplier shall give list of In-House Facilities:**	
2.a	Vendor shall have in-House necessary Manufacturing facilities required for manufacturing and supply of item/s as per drawing/specification.	
2.b	BHEL reserves right to visit the Works of the Manufacturer for Physical verification of the Manufacturing facilities (as declared by them) and assessment of their Quality systems during Technical Evaluation of the Offers.	
3	**Experience:**	
3.a	Bidders shall submit the necessary documents proving their Experience in Supplying same or similar items to any Power Plant equipment Manufacturer (worldwide or within India) in last three years from the date of Enquiry. Documentary evidances to be submitted in the form of Customer's Purchase Order copies / Material Acceptance Report and item drawings/specifications. Documentary evidences submitted shall strictly meet all the technical requirement of the NIT.	
3.b	BHEL reserves right to verify the details from the Bidder's customers based on Documents submitted as a part of past experience. BHEL may ask for other relevant documents in line with above to review the capacity and capability of vendor with respect to enquired items.	
4	**Manufacturing Process Plan:**	
4.a	Bidders shall submit detailed Manufacturing process Plan along with the Technical Offer.	
5	**Annual Turnover:**	
5.a	Turnover of the supplier should be as per GeM (Government e-market place) guide lines (Maximum limit to be taken). Bidders should enclose Audited Balance sheets and Profit & Loss account statement of last three consecutive years in the Part I bid.	
6	**Others**	
6.a	Bidder will supply item/s exactly as per enquiry.	

Note: Non Submission of the above requested documents/non compliance to the above points will result in rejection of the Offers without further Notice/Intimation to the Bidder and no correspondance will be entertained at later date.

On Bidder's office letter pad

Make in India (Model Certificate) Annexure-I

Self-Declaration

Enquiry No.	
Enquiry Date	

In line with Government public procurement order Number P-45021/2/2017-B.E-II dated 15.06.2017, and further modified order dt. 28.05.2018, 29.05-2019 and 04.06.2020

I / We hereby declare that I / We are a "Local Supplier" meeting the requirement of minimum local content (…….%) defined in the above government notification for the goods against above mentioned enquiry Number.

Details of location at which local value addition will be made is as follows:

Door No.	
Street / Address 1	
Street / Address 2	
District	
State	
Country	
PIN Code	

We also understand that the false declarations will be considered as breach of Integrity and liable for action.

For Company Name:
Seal:
Signature:

Date:
Place:

(Please fill all the yellow color field)

Annexure-1

INTEGRITY PACT

Between

Bharat Heavy Electricals Ltd. (BHEL), a company registered under the Companies Act 1956 and having its registered office at "BHEL House", Siri Fort, New Delhi - 110049 (India) hereinafter referred to as "The Principal", which expression unless repugnant to the context or meaning hereof shall include its successors or assigns of the ONE PART

and

_____, (description of the party along with address), hereinafter referred to as "The Bidder/ Contractor" which expression unless repugnant to the context or meaning hereof shall include its successors or assigns of the OTHER PART

Preamble

The Principal intends to award, under laid-down organizational procedures, contract/s for _____ _____ _____. The Principal values full compliance with all relevant laws of the land, rules and regulations, and the principles of economic use of resources, and of fairness and transparency in its relations with its Bidder(s)/ Contractor(s).

In order to achieve these goals, the Principal will appoint Independent External Monitor(s), who will monitor the tender process and the execution of the contract for compliance with the principles mentioned above.

Section 1- Commitments of the Principal

1.1 The Principal commits itself to take all measures necessary to prevent corruption and to observe the following principles:-

1.1.1 No employee of the Principal, personally or through family members, will in connection with the tender for, or the execution of a contract, demand, take a promise for or accept, for self or third person, any material or immaterial benefit which the person is not legally entitled to.

1.1.2 The Principal will, during the tender process treat all Bidder(s) with equity and reason. The Principal will in particular, before and during the tender process, provide to all Bidder(s) the same information and will not provide to any Bidder(s) confidential/ additional information through which the Bidder(s) could obtain an advantage in relation to the tender process or the contract execution.

1.1.3 The Principal will exclude from the process all known prejudiced persons.

1.2 If the Principal obtains information on the conduct of any of its employees which is a penal offence under the Indian Penal Code 1860 and Prevention of Corruption Act 1988 or any other statutory penal enactment, or if there be a substantive suspicion in this regard, the Principal will inform its Vigilance Office and in addition can initiate disciplinary actions:

Section 2 - Commitments of the Bidder(s)/ Contractor(s)

2.1 The Bidder(s)/ Contractor(s) commit himself to take all measures necessary to prevent corruption. He commits himself to observe the following principles during his participation in the tender process and during the contract execution.

2.1.1 The Bidder(s)/ Contractor(s) will not, directly or through any other person or firm, offer, promise or give to the Principal or to any of the Principal's employees involved in the tender process or the execution of the contract or to any third person any material, immaterial or any other benefit which he/ she is not legally entitled to, in order to obtain in exchange any advantage of any kind whatsoever during the tender process or during the execution of the contract.

2.1.2 The Bidder(s)/ Contractor(s) will not enter with other Bidder(s) into any illegal or undisclosed agreement or understanding, whether formal or informal. This applies in particular to prices, specifications, certifications, subsidiary contracts, submission or non-submission of bids or any other actions to restrict competitiveness or to introduce cartelization in the bidding process.

2.1.3 The Bidder(s)/ Contractor(s) will not commit any penal offence under the relevant Indian Penal Code (IPC) and Prevention of Corruption Act; further the Bidder(s)/ Contractor(s) will not use improperly, for purposes of competition or personal gain, or pass on to others, any information or document provided by the Principal as part of the business relationship, regarding plans, technical proposals and business details, including information contained or transmitted electronically.

2.1.4 Foreign Bidder(s)/ Contractor(s) shall disclose the name and address of agents and representatives in India and Indian Bidder(s)/ Contractor(s) to disclose their foreign principals or associates. The Bidder(s)/ Contractor(s) will, when presenting his bid, disclose any and all payments he has made, and is committed to or intends to make to agents, brokers or any other intermediaries in connection with the award of the contract.

2.2 The Bidder(s)/ Contractor(s) will not instigate third persons to commit offences outlined above or be an accessory to such offences.

2.3 The Bidder(s)/ Contractor(s) shall not approach the Courts while representing the matters to IEMs and will await their decision in the matter.

Section 3 - Disqualification from tender process and exclusion from future contracts

If the Bidder(s)/ Contractor(s), before award or during execution has committed a transgression through a violation of Section 2 above, or acts in any other manner such as to put his reliability or credibility in question, the Principal is entitled to disqualify the Bidder(s)/ Contractor(s) from the tender process or take action as per the separate "Guidelines on Banning of Business dealings with Suppliers/ Contractors", framed by the Principal.

Section 4 - Compensation for Damages

4.1 If the Principal has disqualified the Bidder from the tender process prior to the award according to Section 3, the Principal is entitled to demand and recover the damages equivalent Earnest Money Deposit/ Bid Security.

4.2 If the Principal has terminated the contract according to Section 3, or if the Principal is entitled to terminate the contract according to section 3, the Principal shall be entitled to

demand and recover from the Contractor liquidated damages equivalent to 5% of the contract value or the amount equivalent to Security Deposit/ Performance Bank Guarantee, whichever is higher.

Section 5 - Previous Transgression

5.1 The Bidder declares that no previous transgressions occurred in the last 3 years with any other company in any country conforming to the anti-corruption approach or with any other Public Sector Enterprise in India that could justify his exclusion from the tender process.

5.2 If the Bidder makes incorrect statement on this subject, he can be disqualified from the tender process or the contract, if already awarded, can be terminated for such reason.

Section 6 - Equal treatment of all Bidders/ Contractors / Sub-contractors

6.1 The Principal will enter into agreements with identical conditions as this one with all Bidders and Contractors. In case of sub-contracting, the Principal contractor shall be responsible for the adoption of IP by his sub-contractors and shall continue to remain responsible for any default by his sub-contractors.

6.2 The Principal will disqualify from the tender process all bidders who do not sign this pact or violate its provisions.

Section 7 - Criminal Charges against violating Bidders/ Contractors /Subcontractors

If the Principal obtains knowledge of conduct of a Bidder, Contractor or Subcontractor, or of an employee or a representative or an associate of a Bidder, Contractor or Subcontractor which constitutes corruption, or if the Principal has substantive suspicion in this regard, the Principal will inform the Vigilance Office.

Section 8 - Independent External Monitor(s)

8.1 The Principal appoints competent and credible Independent External Monitor for this Pact. The task of the Monitor is to review independently and objectively, whether and to what extent the parties comply with the obligations under this agreement.

8.2 The Monitor is not subject to instructions by the representatives of the parties and performs his functions neutrally and independently. He reports to the CMD, BHEL.

8.3 The Bidder(s)/ Contractor(s) accepts that the Monitor has the right to access without restriction to all contract documentation of the Principal including that provided by the Bidder(s)/ Contractor(s). The Bidder(s)/ Contractor(s) will grant the monitor, upon his request and demonstration of a valid interest, unrestricted and unconditional access to his contract documentation. The same is applicable to Sub-contractor(s). The Monitor is under contractual obligation to treat the information and documents of the Bidder(s)/ Contractor(s) / Sub-contractor(s) with confidentiality in line with Non- disclosure agreement.

8.4 The Principal will provide to the Monitor sufficient information about all meetings among the parties related to the contract provided such meetings could have an impact on the contractual relations between the Principal and the Contractor. The parties offer to the Monitor the option to participate in such meetings.

8.5 The role of IEMs is advisory, would not be legally binding and it is restricted to resolving issues raised by an intending bidder regarding any aspect of the tender which allegedly restricts competition or bias towards some bidders. At the same time, it must be understood that IEMs are not consultants to the Management. Their role is independent in nature and the advice once tendered would not be subject to review at the request of the organization.

8.6 For ensuring the desired transparency and objectivity in dealing with the complaints arising out of any tendering process, the matter should be examined by the full panel of IEMs jointly as far as possible, who would look into the records, conduct an investigation, and submit their joint recommendations to the Management.

8.7 The IEMs would examine all complaints received by them and give their recommendations/ views to CMD, BHEL, at the earliest. They may also send their report directly to the CVO and the Commission, in case of suspicion of serious irregularities requiring legal/ administrative action. IEMs will tender their advice on the complaints within 10 days as far as possible.

8.8 The CMD, BHEL shall decide the compensation to be paid to the Monitor and its terms and conditions.

8.9 IEM should examine the process integrity, they are not expected to concern themselves with fixing of responsibility of officers. Complaints alleging mala fide on the part of any officer of the organization should be looked into by the CVO of the concerned organisation.

8.10 If the Monitor has reported to the CMD, BHEL, a substantiated suspicion of an offence under relevant Indian Penal Code/ Prevention of Corruption Act, and the CMD, BHEL has not, within reasonable time, taken visible action to proceed against such offence or reported it to the Vigilance Office, the Monitor may also transmit this information directly to the Central Vigilance Commissioner, Government of India.

8.11 The number of Independent External Monitor(s) shall be decided by the CMD, BHEL.

8.12 The word `Monitor' would include both singular and plural.

Section 9 - Pact Duration

9.1 This Pact shall be operative from the date IP is signed by both the parties till the final completion of contract for successful bidder and for all other bidders 6 months after the contract has been awarded. Issues like warranty / guarantee etc. should be outside the purview of IEMs.

9.2 If any claim is made/ lodged during currency of IP, the same shall be binding and continue to be valid despite the lapse of this pact as specified above, unless it is discharged/ determined by the CMD, BHEL.

Section 10 - Other Provisions

10.1 This agreement is subject to Indian Laws and jurisdiction shall be registered office of the Principal, i.e. New Delhi.

10.2 Changes and supplements as well as termination notices need to be made in writing. Side agreements have not been made.

10.3 If the Contractor is a partnership or a consortium, this agreement must be signed by all partners or consortium members.

10.4 Should one or several provisions of this agreement turn out to be invalid, the remainder of this agreement remains valid. In this case, the parties will strive to come to an agreement to their original intentions.

10.5 Only those bidders / contractors who have entered into this agreement with the Principal would be competent to participate in the bidding. In other words, entering into this agreement would be a preliminary qualification.

---	---
For & On behalf of the Principal	For & On behalf of the Bidder/ Contractor
(Office Seal)	(Office Seal)

Place----------

Date----------

Witness:_____	Witness:_____
(Name & Address) _____	(Name & Address) _____
_____	_____

Clause on IP in the tender

Integrity Pact (IP)

(a) IP is a tool to ensure that activities and transactions between the Company and its Bidders/ Contractors are handled in a fair, transparent and corruption free manner. Following Independent External Monitors (IEMs) on the present panel have been appointed by BHEL with the approval of CVC to oversee implementation of IP in BHEL.

SI	IEM	Email
1.	Shri Otem Dai, IAS (Retd.)	iem1@bhel.in
2.	Shri Bishwamitra Pandey, IRAS (Retd.)	iem2@bhel.in
3.	Shri Mukesh Mittal, IRS (Retd.)	iem3@bhel.in

(b) The IP as enclosed with the tender is to be submitted (duly signed by authorized signatory) along with techno-commercial bid (Part-I, in case of two/ three part bid). Only those bidders who have entered into such an IP with BHEL would be competent to participate in the bidding. In other words, entering into this Pact would be a preliminary qualification.

(c) Please refer Section-8 of IP for Role and Responsibilities of IEMs. In case of any complaint arising out of the tendering process, the matter may be referred to any of the above IEM(s). All correspondence with the IEMs shall be done through email only.

Note:

No routine correspondence shall be addressed to the IEM (phone/ post/ email) regarding the clarifications, time extensions or any other administrative queries, etc on the tender issued. All such clarification/ issues shall be addressed directly to the tender issuing (procurement) department's officials whose contact details are provided below:

Details of contact person(s):

(1)
Name:_____
Deptt: _____
Address: _____
Phone: (Landline/ Mobile)
_____
Email: _____
Fax: _____

(2)
Name:_____
Deptt: _____
Address: _____
Phone: (Landline/ Mobile)
_____
Email: _____
Fax: _____

GENERAL COMMERCIAL TERMS & CONDITIONS OF ENQUIRY
(FOR INDIAN VENDORS)

Amendment- 24
ANNEXURE-A

ITEM DESCRIPTION:
ENQUIRY NO:

Sl No	BHEL STANDARD TERMS &CONDITIONS	Confirmation of supplier (Yes/No)
1	A) OFFER MUST BE SUBMITTED IN TWO PART BID SYSTEM NAMELY TECHNO-COMMERCIAL BID & PRICE BID FOR THE ITEM AS PER ENQUIRY IN SEPARATE SEALED COVERS: (I) TECHNO – COMMERCIAL BID & (II) PRICE BID SHOULD BE CLEARLY SUPERSCRIBED THE ENQUIRY NO. AND DUE DATE ON THE ENVELOPES. (B) UN-PRICED OFFER WITH TECHNICAL BID IS REQUIRED TO BE FURNISHED BY THE VENDOR. TECHNICAL OFFER SHOULD CLEARLY REFLECT AT LEAST OUR MATERIAL CODE, ITEM DESCRIPTION & QUANTITY. (C) THE DIFFERENCE BETWEEN "UN-PRICED OFFER" AND "PRICED OFFER" SHOULD BE ONLY THE PRICES WHEREVER APPLICABLE. THE RATES AND AMOUNT SHOULD BE CLEARLY WRITTEN IN FIGURES AND WORDS BOTH WITHOUT ANY CUTTING / OVERWRITING. (D) **IMPORTANT POINT FOR VENDOR WHO HAVE NOT SUBMITTED THE SRF (SUPPLIER REGISTRATION FORM) SO FAR**: THE VENDORS, WHO HAVE NOT SUBMITTED THE SRF SO FAR, MUST SUBMIT THE SAME ALONG WITH PART- 1 BID. THE SRF TO BE DOWNLOADED FROM WWW.BHEL.COM OR https://herp.bhel.com .	
2	BID SHOULD BE FREE FROM CORRECTION, OVERWRITING, USING CORRECTIVE FLUID, ETC. ANY INTERLINEATION , CUTTING , ERASURE OR OVERWRITING SHALL BE VALID ONLY IF THEY ARE ATTESTED UNDER FULL SIGNATURE(S) OF PERSON(S) SIGNING THE BID ELSE BID SHALL BE LIABLE FOR REJECTION .	
3	YOUR TECHNO COMMERCIAL BID SHOULD MENTION THAT PRICE BID HAS BEEN SENT IN A SEPARATE ENVELOPE GIVING ITS REFERENCE.	
4	VENDOR TO ENSURE THAT ITEM & QUANTITY MENTIONED IN THE OFFERS ARE EXACTLY SAME AS PER ENQUIRY. IF ANY DEVIATION IS THERE PARTY MUST MENTION SPECIFIC HEREWITH OTHERWISE BHEL SHALL CONSIDER THAT ITEM & QUANTITY AS REQUIRED IN ENQUIRY.	
5	PLEASE MAKE SURE THAT THERE IS NO DISCREPANCY IN BETWEEN ACCEPTED TERMS & CONDITIONS MENTIONED IN THE CHECK LIST AND QUOTATION SUBMITTED BY VENDOR AND IF FOUND SO THEN THE TERMS & CONDITIONS WHICH ARE BENEFICIAL TO BHEL WOULD ONLY BE CONSIDERED.	
6	THE TENDER RECEIVED AFTER 14:00 HRS ON THE DUE DATE WILL NOT BE CONSIDERED.	
7	PART-I CONTAINING THE TECHNO-COMMERCIAL BID WILL BE OPENED ON THE DATE AND TIME SPECIFIED IN THE ENQUIRY, IN THE PRESENCE OF THOSE TENDERERS WHO WISH TO ATTEND. PART-II i.e., PRICE BID WILL BE OPENED ONLY OF THOSE BIDDERS WHO ARE FOUND TECHNO-COMMERCIALLY SUITABLE AFTER SCRUTINY OF THEIR PART-I OFFERS.	
8	NO REVISED OFFERS WILL BE ACCEPTED UNLESS ASKED BY BHEL AFTER OPENING OF PART-1 BID IN ANY CASE.	
9	THE RATE OF GST SHOULD BE CLEARLY MENTIONED IN THE OFFER.	
10	VALIDITY OF OFFER SHOULD BE MINIMUM 90 DAYS FROM THE DATE OF TECHNO - COMMERCIAL BID OPENING OR 60 DAYS FROM THE REVERSE AUCTION DATE.	
11	BHEL RESERVES THE RIGHT TO REJECT THE OFFER, WHICH IS HAVING DEVIATIONS TO THE TERMS AND CONDITIONS GIVEN IN THE TENDER ENQUIRY.	
12	**PRICING TERMS**: PRICES ONCE QUOTED SHALL REMAIN FIRM WITHIN THE VALIDITY OR ANY EXTENSION THEREOF FOR PLACEMENT OF ORDER, TILL COMPLETE EXECUTION OF THE ORDER, WITHOUT ANY ESCALATION/INCREASE FOR ANY REASON, WHATSOEVER, UNLESS SPECIFICALLY PROVIDED FOR IN THE ENQUIRY & PO. IN CASE OF FOREIGN VENDORS, THE QUOTED PRICE SHALL BE TAKEN AS INCLUSIVE OF THIRD PARTY INSPECTION AND TESTING CHARGES AS CALLED FOR IN THE NIT.	
13	**BID EVALUATION:** UNLESS SPECIFIED IN THE TENDER, VENDOR MUST NOTE THAT BHEL WILL ARRIVE THE L1 STATUS FOR EACH ITEM ON LANDED COST BASIS. ACCORDINGLY, ORDER SHALL BE PLACED ON LOWEST BIDDER ON INDIVIDUAL ITEM BASIS ONLY, UNLESS BHEL ASK FOR TERMS OTHER THAN THIS ON EXCEPTION BASIS. IN THE COURSE OF EVALUATION, IF MORE THAN ONE BIDDER HAPPENS TO OCCUPY L-1 STATUS, EFFECTIVE L-1 WILL BE DECIDED BY SOLICITING DISCOUNTS FROM THE RESPECTIVE L-1 BIDDERS. IN CASE MORE THAN ONE BIDDERS HAPPENS TO OCCUPY THE L-1 STATUS EVEN AFTER SOLICITING DISCOUNST, THE L-1 BIDDER SHALL BE DECIDED BY A TOSS/DRAW OF LOTS, IN THE PRESENCE OF THE RESPECTIVE BIDDER(S) OR THEIR REPRESENTATIVE(S). RANKING WILL BE DONE ACCORDINGLY. BHEL'S DECISION IN SUCH SITUATION SHALL BE FINAL AND BINDING.	
14	**TERMS OF DELIVERY:** **I. FOR INDIGENOUS SUPPLIERS**: THE TERMS OF DELIVERY SHOULD BE QUOTED ON F.O.R. DESTINATION (BHEL HERP STORES VARANASI) BASIS ONLY (i.e. FREIGHT & INSURANCE ON VENDOR'S ACCOUNT ONLY). IF ANY BIDDER STILL QUOTES OTHER DELIVERY TERM IN PLACE OF BHEL HERP STORES, THEIR OFFER MAY NOT BE CONSIDERED FOR FURTHER PROCESSING. IT MUST BE SPECIFICALLY NOTED.	
15	IF ANY INDIAN SUPPLIERS ARRANGE SUPPLY FROM FOREIGN PRINCIPLES/WORKS, TERMS OF DELIVERY SHOULD BE QUOTED ON CIF JNPT MUMBAI (INDIA) SEA PORT BASIS ONLY (i.e. FREIGHT & INSURANCE ON VENDOR'S ACCOUNT UPTO JNPT MUMBAI (INDIA) SEA PORT) OR CFR MUMBAI AIRPORT. HOWEVER FREIGHT CHARGES AS PER BHEL TRANSPORT CONTRACT FROM JNPT MUMBAI SEAPORT/MUMBAI AIRPORT TO BHEL VARANASI FOR EACH ITEM WILL BE LOADED AT THE TIME OF TOTAL LANDED COST CALCULATION.	
16	INSURANCE CHARGES SHALL BE TO VENDOR'S ACCOUNT ONLY IF PRICE QUOTED ON BHEL HERP STORES BASIS. IN CASE PRICE QUOTED IS ON CIF JNPT MUMBAI BASIS/ CFR MUMBAI AIRPORT BASIS, INSURANCE UP TO CIF JNPT MUMBAI/ MUMBAI AIRPORT SHALL BE IN VENDOR ACCOUNT.	
17	**PAYMENT TERMS:** **I.FOR MSEs VENDORS:** 100% AGAINST SRV WITHIN 45 DAYS THROUGH EFT (ELECTRONIC FUND TRANSFER) FROM THE DATE OF RECEIPT OF MATERIAL (DATE OF SRV) AT BHEL HERP VARANASI STORES AS PER PO. II.**FOR MEDIUM ENTERPRISES VENDORS**: 100% AGAINST SRV WITHIN 60 DAYS THROUGH EFT (ELECTRONIC FUND TRANSFER) FROM THE DATE OF RECEIPT OF MATERIAL (DATE OF SRV) AT BHEL HERP VARANASI STORES AS PER PO. **III. FOR NON- MSME:** 100% AGAINST SRV WITHIN 90 DAYS THROUGH EFT (ELECTRONIC FUND TRANSFER) FROM THE DATE OF RECEIPT OF MATERIAL (DATE OF SRV) AT BHEL HERP VARANASI STORES AS PER PO. **IV.BHEL HERP WILL MAKE PAYMENTS IN TWO PARTS: -** **PART-I:** BASIC INVOICE VALUE AND ALL OTHER CHARGES (EXCEPT GST AMOUNT) WILL BE PAID AS PER P.O. PAYMENT TERMS. **PART-II**: GST PORTION OF INVOICE VALUE WILL BE PAID ONLY AFTER FULFILLING FOLLOWING CONDITIONS: **(A)** PAYMENT OF GST AMOUNT INTO GOVT. ACCOUNT BY SUPPLIER AGAINST INVOICE RAISED TO BHEL. **(B)** FILING OF GST RETURN **(C)** DISPLAY OF GST CREDIT AGAINST BHEL GSTIN NO.09AAACB4146P2ZC IN GSTR-2B ON GSTN PORTAL. Note: 1. PAYMENT WILL BE MADE AFTER ACCEPTANCE OF MATERIAL. 2. ADVANCE PAYMENT IS NOT ACCEPTABLE BY BHEL HERP VARANASI IN ANY CASE. 3. IF ANY SUPPLIER FALLS UNDER "NON MSE" OR "NON MEDIUM" CATEGORY, THEIR PAYMENT TERM WILL BE CONSIDERED AS NON MSME SUPPLIER PAYMENT WITHOUT ANY INTIMATION.	
18	**LOADING OF PAYMENT TERM:** IN CASE OF DEVIATION, LOADING OF INTEREST RATE @SBI MCLR RATE + 6% (AS ON PART-1 OPENING DATE) SHALL BE LOADED WHILE ARRIVING AT LANDED COST TO BHEL.	
19	**LIQUIDATED DAMAGES/ LATE DELIVERY (LD) PENALTY CLAUSE:** SUBJECT TO FORCE MAJEURE CONDITIONS, FAILURE TO SUPPLY WITHIN PURCHASE ORDER DELIVERY SCHEDULE WILL MAKE THE SUPPLIER LIABLE TO AN UNCONDITIONAL PENALTY OF 0.5 % PER WEEK OR PART THEREOF SUBJECT TO THE MAXIMUM OF 10% OF THE UNDELIVERED PURCHASE ORDER VALUE EXCLUDING TAXES & DUTIES. NO GRACE PERIOD SHALL BE GIVEN.	
20	**LOADING OF LIQUIDATED DAMAGES (LD):** DEVIATION TO ABOVE STANDARD PENALTY CLAUSE, MAXIMUM LOADING OF 10% (IN CASE OF NON ACCEPTANCE OF LD CLAUSE) OR PART THEREOF (IN CASE OF PART ACCEPTANCE OF LD) SHALL BE LOADED WHILE ARRIVING LANDED COST TO BHEL. **LOADING OF DELIVERY TERM:** FURTHER IF DEVIATION IS FOUND IN THE ACCEPTED DELIVERY TERM AS WELL AS ACCEPTED PENALTY TERM, SUITABLE LOADING BASED ON TRANSPORTATION TIME TO BE TAKEN SHALL BE LOADED WHILE ARRIVING LANDED COST TO BHEL HERP STORES WHICH MAY BE AS BELOW: (i) 1% OF THE BASIC COST FOR INDIAN SUPPLIERS,	

21	**DELIVERY PERIOD:** VENDOR SHOULD STRICTLY QUOTE THE DELIVERY PERIOD AS MENTIONED IN NIT.	
22	IF ANY VENDOR DOES NOT SUPPLY THE ITEM WITHIN THE PURCHASE ORDER DELIVERY PERIOD, BHEL MAY/MAY NOT ACCEPT THE SUPPLY AT ITS SOLE DISCRETION.	
23	**BANK GUARANTEE:** THE COST OF BHEL FREE ISSUE MATERIALS PER SET/PER ASSEMBLY AND TOTAL COST OF FIM FOR THE ENQUIRY ARE MENTIONED IN NIT. IN THIS REGARD: **1.** PARTY WILL HAVE TO SUBMIT EQUAL AMOUNT OF SECURITY DEPOSIT (IN THE FORM OF 25% BG/FDR/DD/CHEQUE/BANK TRANSFER AND 75% INDEMNITY BOND) TOWARDS THE COST OF BHEL MATERIALS TO BE ISSUED TO THEM BEFORE THE ISSUE OF BHEL MATERIALS TO THEM. AT ANY POINT OF TIME, PROPORTIONATE SECURITY DEPOSIT OF TOTAL/CUMMULATIVE MATERIAL VALUE SHOULD BE MAINTENED. 2. BHEL MAY ASK THE SUPPLIER FOR SUBMISSION OF FULL SECURITY DEPOSIT AMOUNT OR PART DEPENDING UPON THE AVAILABILITY OF FREE ISSUE MATERAILS AT OUR END. 3. PARTY MUST HAVE TO SUBMIT THE SAME WITHIN 02 WEEK TIME FROM THE DATE OF WRITTEN INTIMATION BY BHEL WITHOUT FAIL OTHERWISE IT WOULD TREATED AS FAILURE OF HONOURING PO TERMS AND ACCORDINGLY BHEL MAY CANCEL THE PURCHASE ORDER AND INITIATE ALTERNATE PROCUREMENT ACTION AT SUPPLIER RISK & COST. 4. IN CASE OF ABSENCE OF DESIRED SECURITY DEPOSIT AT BHEL END AND ALSO NON RESPONSE OF POINT NO. 03 AS ABOVE, I. BHEL MAY HOLD THE PENDING PAYMENTS OF SUPPLIER AVAILABLE AT BHEL END WITHOUT ANY INTIMATION. II. IF NO PAYMENT IS PENDING AT BHEL END, ACTION FOR ALTERNATE PROCUREMENT ACTION MAY BE INITIATED. 5. THE FORMAT OF BG SHALL BE PER ATTACHED ANNEXURE-BG/FIM ONLY.	
24	TRANSPORTATION CHARGES FOR SENDING BHEL FREE ISSUE MATERIALS (FIM) TO THE PARTY WORKS WILL BE BORNE BY BHEL ONLY. THE FREIGHT CHARGES FOR SENDING THE BHEL FIM FROM HERP STORES TO PARTY'S WORK FOR EACH ITEM WILL BE LOADED AS PER BHEL TRANSPORT CONTRACT AT THE TIME OF TOTAL LANDED COST CALCULATION. HOWEVER, VARANASI/LOCAL BASED VENDORS WILL LIFT THE FIM FROM BHEL STORES AND BORNE ITS TRANSPORTATION CHARGES.	
25	IF BHEL ISSUES FREE ISSUE MATERIALS TO THE SUPPLIER, IT MUST BE RETURNED WITHIN THE TIME LIMIT AS PRESCRIBED IN GST LAW (PRESENTLY 01 (ONE) YEAR FROM THE DATE OF FREE ISSUE DATE) TO COMPLY THE GST RULES. IF ANY VENDOR DOES NOT RETURN THE BHEL FREE ISSUE MATERIALS AS MENTIONED ABOVE, THE FINANCIAL IMPLICATION ON ACCOUNT OF THIS, IF ANY, SHALL BE RECOVERED FROM THE PARTY BILLS.	
26	**REVERSE AUCTION**: BHEL SHALL BE RESORTING TO REVERSE AUCTION (RA) (GUIDELINES AS AVAILABLE ON WWW.BHEL.COM) FOR THIS TENDER. RA SHALL BE CONDUCTED AMONG ALL THE TECHNO-COMMERCIALLY QUALIFIED BIDDERS. PRICE BIDS OF ALL TECHNO-COMMERCIALLY QUALIFIED BIDDERS SHALL BE OPENED AND SAME SHALL BE CONSIDERED AS INITIAL BIDS OF BIDDERS IN RA. IN CASE ANY BIDDER(S) DO (ES) NOT PARTICIPATE IN ONLINE REVERSE AUCTION, THEIR SEALED ENVELOPE PRICE BID ALONG WITH APPLICABLE LOADING, IF ANY, SHALL BE CONSIDERED FOR RANKING.	
27	IF ANY OF THE VENDORS DO NOT ACCEPT THE ABOVE POINT MENTIONED AT SL. NO. 26, THEIR OFFER MAY BE LIABLE FOR REJECTION WITHOUT INTIMATION.	
28	**RISK PURCHASE**: IN CASE OF DELAY IN SUPPLIES/ DEFECTIVE SUPPLIES/NON EXECUTION OF PURCHASE ORDER ETC. (FOR DETAILS, REFER GUIDELINES FOR RISK PURCHASE), BHEL MAY CANCEL THE ORDER IN FULL OR PART THEREOF/ MAY ALSO MAKE THE PURCHASE OF SUCH MATERIALS FROM ELSEWHERE/ALTERNATIVE SOURCES AT THE RISK & COST OF SUPPLIER.BHEL MAY ALSO MANUFACTURE THE ITEM IN-HOUSE IN PART OR FULL DEPENDING UPON THE URGENCY OF THE ITEM. GUIDELINES FOR **RISK PURCHASE** IS AVAILABLE ON BHEL WEBSITE "https://herp.bhel.com" at "Notice". RESPECTIVE BIDDERS / SUPPLIERS MAY REFER THIS GUIDELINE BEFORE SUBMITTING THEIR OFFER AGAINST BHEL, HERP TENDER ENQUIRIES. IN CASE RISK PURCHASE IS APPLIED, BHEL SHALL TAKE ACTION AGAINST THE NON-PERFORMING AND/OR DEFAULTING SUPPLIERS/ CONTRACTORS IN LINE WITH THIS GUIDELINE ONLY.	
29	BHEL MAY SHORT CLOSE/CANCEL AN ORDER AT ANY TIME DURING THE CURRENCY OF THE CONTRACT/PO IRRESPECTIVE OF THE PO DELIVERY DATE, IF (I) THE WORK PROGRESS OF THE VENDOR IS POOR, OR (II) THE DELIVERY REQUIREMENT OF THE ITEM IS VERY CRITICAL & NOT BEING MET BY THE VENDOR ON WHICH ORDER HAS BEEN PLACED, OR (III) THERE IS NO RESPONSE FOR IMPROVEMENT IN DELIVERY AS PER BHEL REQUIREMENT,	
30	THE OFFERS OF THE BIDDERS WHO ARE ON THE BANNED LIST AND ALSO THE OFFER OF THE BIDDERS, WHO ENGAGE THE SERVICES OF THE BANNED FIRMS, SHALL BE REJECTED. THE LIST OF BANNED FIRMS IS AVAILABLE ON BHEL WEB SITE www.bhel.com	
31	**RESERVATION RIGHTS OF BHEL**: – BHEL RESERVES THE RIGHT TO REJECT ANY OR ALL QUOTATIONS WITHOUT ASSIGNING ANY REASONS THEREOF. BHEL ALSO RESERVES THE RIGHT TO INCREASE OR DECREASE THE TENDERED QUANTITIES. VENDORS SHOULD BE PREPARED TO ACCEPT ORDER FOR REDUCED QUANTITIES WITHOUT ANY EXTRA CHARGES. VENDOR SHOULD ALSO BE PREPARED FOR GIVING DISCOUNT IN CASE OF INCREASE IN QUANTITY.	
32	**NON-DISCLOSURE AGREEMENT**: ALL DRAWINGS AND STANDARDS ARE PROPRIETARY OF BHEL. IT MUST NOT BE USED IN ANY WAY DETRIMENTAL TO THE INTEREST OF THE COMPANY. ALL SUPPLIERS SHALL FURNISH NDAS (NON-DISCLOSURE AGREEMENT) AGAINST USE OF DOCUMENTS FURNISHED BY BHEL TOWARDS UN-AUTHORIZED USE EXCEPT FOR THE PURPOSE IT HAS BEEN FURNISHED.	
33	**A. SETTLEMENT OF DISPUTES & ARBITRATION:** I.ALL QUESTIONS/INTERPRETATIONS REGARDING SUBJECT MATTER OF THE CONTRACT SHALL BE DECIDED BY THE BHEL ON THE REQUEST OF THE VENDOR AND THE DECISION OF THE BHEL SHALL BE FINAL. II.IN CASE OF DISPUTE, STEPS SHALL BE TAKEN BY THE PARTIES TO THE CONTRACT TO SETTLE THE SAME THROUGH NEGOTIATIONS. III.IN CASE, DISPUTE IS NOT SETTLED IN NEGOTIATIONS, IT SHALL BE REFERRED TO CONCILIATOR APPOINTED BY THE COMPETENT AUTHORITY OF THE BHEL. *THE CONCILIATION PROCEEDINGS WITH RESPECT TO A DISPUTE AS DEFINED IN THE BHEL CONCILIATION SCHEME, 2018 AND SUBSEQUENT REVISIONS CAN BE INITIATED UNDER THE SCHEME AT ANY STAGE WHETHER BEFORE, DURING OR EVEN AFTER THE COMMENCEMENT OF ARBITRATION PROCEEDINGS OR LITIGATION BEFORE COURTS. THIS CONCILLIATION SCHEME IS AVAILABLE ON OUR WEBSITES* https://herp.bhel.com *AND* ***www.bhel.com*** . IV.IN CASE DISPUTE IS NOT SETTLED IN CONCILIATION PROCEEDINGS, THE SAME SHALL BE REFERRED TO ARBITRATION AS PER CORPORATE GUIDELINES OF THE BHEL AND THE ARBITRATION PROCEEDING SHALL BE CONDUCTED AS PER PROVISIONS OF THE ARBITRATION AND CONCILIATION ACT, 1996 READ WITH CORPORATE GUIDELINE AS AMENDED FROM TIME TO TIME. V.THE VENDOR SHALL CONTINUE TO PERFORM THE CONTRACT, PENDING SETTLEMENT OF DISPUTE(S). **B.JURISDICTION:** ALL DISPUTES OR DIFFERENCES ARISING OUT OF OR IN CONNECTIONS WITH THE CONTRACT SHALL BE SUBJECT TO THE EXCLUSIVE JURISDICTION OF THE COURT AT VARANASI (U.P.) ONLY.	
34	**SPECIAL NOTE FOR BIDDERS**: THE QUOTATION SHOULD BE FROM PRINCIPAL / ORIGINAL EQUIPMENT MANUFACTURER ONLY. THE OFFER OF THOSE OEM, AUTHORISING THEIR TRADER / DEALER / DISTRIBUTOR TO QUOTE AND TAKE ORDER IS LIABLE FOR DISQUALIFICATION. SINCE BHEL PREFER TO DEAL DIRECTLY WITH OEM AND NOT THROUGH DEALER / TRADER / DISTRIBUTOR OF OEM, THEREFORE, OEM MUST DIRECTLY QUOTE, TAKE ORDER AND DELIVER THE MATERIAL UNDER THEIR GUARANTEE / WARRANTEE.	
35	I. FOLLOWING DOCUMENTS SHOULD BE ENCLOSED AND ADDRESSED TO DGM (FINANCE) AND SAME SHALL BE DISPATCHED TO MM DEPTT. BHEL, HERP, TARNA, SHIVPUR, VARANASI-221003 FOR PAYMENT PURPOSE: a) 05 (FIVE) COPIES OF GST INVOICES b) COPY OF GR/RR. c) TEST CERTIFICATE AND GUARANTEE/WARRANTEE CERTIFICATE AND PDI REPORT, IF APPLICABLE. (ONE COPY). II. FURTHER TO ABOVE, 02 (TWO) COMPLETE SETS OF DOCUMENTS (COPIES OF ABOVE MENTIONED DOCUMENTS AT SL. NO. I FOR INDIAN SUPPLIERS (UNDER THIS CLAUSE) SHALL BE SENT FOR PURCHASE AND QUALITY DEPARTMENTS. ORIGINAL COPIES OF TC, GC, PDI REPORTS & OTHER QUALITY PAPERS SHALL BE ATTACHED IN THE SET OF DOCUMENTS FOR QUALITY DEPARTMENTS. III. THE VENDOR SHOULD PROVIDE BILLS & OTHER DOCUMENTS COMPLETE IN ALL RESPECT AS PER PURCHASE ORDER ALONGWITH DESPATCH OF MATERIALS**.** BHEL SHALL SEEK CLARIFICATION(S) (IF ANY) RELATED TO PAYMENT DOCUMENTS IN ONE GO. THE VENDOR SHOULD PROVIDE ALL SUCH CLARIFICATION(S) IMMEDIETLY.ANY DELAY IN PROCESSING OF PAYMENT, DUE TO NON RECEIPT OF CLARIFICATION(S) SOUGHT BY BHEL, SHALL BE ATTRIBUTABLE COMPLETELY TO VENDOR. IV. DIGITALLY SIGNED INVOICE IS ALSO ACCEPTABLE FOR PROCESSING OF PAYMENT.	
36	THE VENDOR SHALL ENSURE THAT THEIR BANK DETAILS ARE UPDATED WITH US FOR TIMELY PAYMENT THROUGH EFT (ELECTRONICS FUND TRANSFER).	

37	**GUIDELINES FOR SUSPENSION OF BUSINESS DEALINGS WITH SUPPLIERS/ CONTRACTORS:** THE REVISED GUIDELINES FOR SUSPENSION OF BUSSINESS DEALINGS ARE AVAILABLE ON BHEL WEBSITE AT "www.bhel.com" on "SUPPLIER REGISTRATION PAGE". RESPECTIVE BIDDERS / SUPPLIERS MAY REFER THIS BEFORE QUOTING AS PER THEIR REQUIREMENT. ACTION AGAINST THE DEFAULTED SUPPLIERS/ CONTRACTORS' SHALL BE TAKEN AS PER THESE GUIDELINES ONLY.	
38	VENDOR MUST FOLLOW THE SEQUENTIAL DELIVERY SCHEDULE i.e. ITEMS TO BE SUPPLIED IN SUCH A MANNER THAT THE PURCHASE ORDER HAVING OLDER DELIVERY SCHEDULE SHOULD BE SUPPLIED EARLIER AND PURCHASE ORDER HAVING LATTER DELIVERY SCHEDULE TO BE SUPPLIED LATTER. IF ANY VENDOR DOES NOT FOLLOW THE SEQUENTIAL DELIVERY SCHEDULE ESPECIALLY FOR SAME ITEM, BHEL MAY ACCOUNT FOR THE ITEM IN SEQUENTIAL MANNER OR MAY RECOVER THE FINANCIAL IMPLICATION.	
39	ALL ABOVE ACCEPTED TERMS & CONDITIONS SHALL BE PART OF PURCHASE ORDER WITH OR WITHOUT MENTIONING IN THE PO/CONTRACT BASED ON YOUR ACCEPTANCE AND OFFER SUBMITTED.	
40	**IMPORTANT INSTRUCTION:** I.VENDORS ARE REQUESTED TO QUOTE THEIR RATE WITH DESCRIPTION MENTIONED IN THE ENQUIRY CONSIDERING ALL TECHNICAL TERMS & CONDITIONS OF THE ENQUIRY. ALSO RATES QUOTED SHOULD BE EXACLTY AS PER SL. NO. OF HARD COPY OF THE ENQUIRY (IF ENQUIRY HAS BEEN FLOATED THROUGH CONVENTIONAL MODE) OR AS PER SL. NO. APPEARING IN THE e-Procurement PORTAL (IF ENQUIRY HAS BEEN FLOATED THROUGH e-Procurement) ONLY. IT MUST BE FOLLOWED UP TO AVOID CONFUSION AT LATER STAGES. ALSO RATES TO BE SUBMITTED BOTH IN NUMERICS AS WELL AS IN WORD. IN CASE OF DISCREPENCY, RATES SUBMITTED IN WORDS SHALL BE CONSIDERED FOR FURTHER PROCESSING. II.DOCUMENTS SUBMITTED WITH THE OFFER SHOULD BE SIGNED AND STAMPED IN EACH PAGE BY AUTHORIZED REPRESENTATIVE OF THE BIDDER. II.IN CASE OF PDI, VENDOR SHALL RAISE ONLINE INSPECTION CALL IN ONLINE INSPECTION PORTAL/INTIMATE BHEL IN WRITTIING (WHERE INSPECTION IS IN BHEL HERP SCOPE) AT LEAST 01 WEEK IN ADVANCE OR AS MUTUALLY AGREED PERIOD ABOUT THE DATE AND PLACE AT WHICH GOODS WILL BE READY FOR INSPECTION. IV.PURCHASER OR HIS AUTHORIZED REPRESENTATIVE SHALL BE ENTITLED TO CARRY OUT SURVEILLANCE INSPECTION OF MATERIAL AND WORKMANSHIP AT SELLER'S PREMISES OR AT HIS SUB-CONTRACTOR'S PREMISES AT ALL REASONABLE TIMES DURING EXECUTION OF THE CONTRACT. SUCH INSPECTION, EXAMINATION AND TESTING, IF MADE, SHALL NOT ABSOLVE THE SELLER FROM HIS OBLIGATIONS UNDER THE CONTRACT. V.SUCH PRE-DISPATCH INSPECTION, EXAMINATION AND TESTING, IF MADE, AT VENDOR'S WORKS SHALL NOT ABSOLVE THE SELLER FROM HIS OBLIGATIONS TO MANUFACTURE/MACHINING THE GOODS UNDER THE CONTRACT. IF DEFCETS ARE FOUND AT LATER STAGE, IT IS THE SOLE RESPONSIBILITY OF THE VENDOR TO REPLACE/RECTIFY THE SAME.	
41	**IMPORTANT CLAUSE FOR GST**: INPUT TAX CREDIT OF GST CAN BE AVAILED BY BHEL ONLY WHEN THE MATERIAL HAS BEEN PHYSICALLY RECEIVED AND GST INVOICE IS IN POSSESSION OF BHEL. THEREFORE, SUPPLIERS SHOULD ENSURE THE FOLLOWING IN RESPECT OF POS ISSUED BY BHEL: I. GST INVOICE SHOULD CONTAIN ADDRESS, GST NO. AND PAN NO. OF BHEL AS WELL AS OF SUPPLIER. APPLICABLE HSN CODE OF THE MATERIAL SHOULD BE INDICATED IN THE GST INVOICE. II. FIVE COPIES OF GST INVOICE AND LORRY RECEIPT MAY BE DESPATCHED ALONGWITH SHIPMENT OF THE GOODS IN ORDER TO AVOID ANY DELAY IN AVAILING INPUT CREDIT BY BHEL. III. DECLARE SUCH INVOICE IN HIS GSTR-1 RETURN FOR THE MONTH OF DESPATCH OF MATERIAL. IV. PAYMENT OF GST TO STATUTORY AUTHORITIES WITHIN PRESCRIBED TIME. V. IN CASE OF DISCREPANCY IN THE DATA UPLOADED BY THE BIDDER IN THE GSTN PORTAL VIS-A-VIS THE TAX INVOICE OR IN CASE OF ANY SHORTAGES OR REJECTION IN THE SUPPLY, THEN BHEL WILL NOT BE ABLE TO AVAIL THE TAX CREDIT. BIDDER HAS TO RECTIFY THE DATA DISCREPANCY IN THE GSTN PORTAL OR ISSUE CREDIT NOTE OR DEBIT NOTE (DETAILS ALSO TO BE UPLOADED IN GSTN PORTAL) FOR THE SHORTAGES OR REJECTIONS IN THE SUPPLIES OR ADDITIONAL CLAIMS FOR PROCESSING OF SUCH INVOICES. VI. GST TDS DEDUCTED AS PER GST ACT, IS UPLOADED IN GSTN PORTAL ALONG GSTR7. BIDDERS CAN DIRECTLY DOWNLOAD THE GST TDS CERTIFICATE FROM THE GSTN PORTAL. IN CASE GST CREDIT IS DELAYED /DENIED TO BHEL DUE TO NON OR DELAYED RECEIPT OF GOODS AND OR TAX INVOICE OR EXPIRY OF TIMELINE PRESCRIBED IN GST LAW FOR AVAILING SUCH ITC OR ANY OTHER REASON NOT ATTRIBUTABLE TO BHEL, GST AMOUNT SHALL BE RECOVERABLE FROM VENDOR ALONG WITH INTEREST /PENALTY LEVIABLE ON BHEL. IN CASE SUPPLIERS DELAYS DECLARING SUCH INVOICE IN HIS RETURN AND GST CREDIT AVAILED BY BHEL IS DENIED OR REVERSED SUBSEQUENTLY AS PER GST LAW, GST AMOUNT PAID BY BHEL TOWARDS SUCH ITC REVERSAL SHALL BE RECOVERABLE FROM SUPPLIER ALONGWITH INTEREST LEVIED/LEVIABLE ON BHEL. IN CASE OF RAISING ANY SUPPLEMENTARY TAX INVOICE (DEBIT/ CREDIT NOTE), THE SUPPLIER SHALL ISSUE THE SAME CONTAINING ALL THE DETAILS AS REFERRED TO IN SECTION 34 READ WITH SECTION 31 OF GST ACT & RULES REFERRED THERE UNDER .	
42	**STATUTORY VARIATION CLAUSE :** ANY INCREASE IN THE RATE OF GST SHALL BE PAYABLE ONLY FOR DELIVERIES COMPLETED WITHIN THE SCHEDULED DELIVERY PERIOD, IN OTHER WORDS INCREASE IN THE RATE OF GST SHALL NOT BE PAYABLE FOR VALUE OF CONSIGNMENT DELIVERED AFTER THE SCHEDULED PURCHASE ORDER DELIVERY PERIOD.2.NEW TAXES AND DUTIES , IF IMPOSED SUBSEQUENT TO DUE DATE OF OFFER SUBMISSION, BY STATUTORY AUTHORITY DURING CONTRACT PERIOD (INCLUDING EXTENSION IF THE SAME IS NOT ATTRIBUTABLE TO BIDDER) SHALL BE REIMBURSED BY BHEL ON PRODUCTION OF RELEVANT SUPPORTING DOCUMENTS TO THE SATISFACTION OF BHEL . HOWEVER, BIDDER SHALL TAKE PRIOR APPROVAL OF BHEL BEFORE DEPOSITING NEW TAXES AND DUTIES.	
43	**IMPORTANT INSTRUCTION FOR MSEs SUPPLIERS:** I. "MSE SUPPLIERS CAN AVAIL THE INTENDED BENEFITS ONLY IF THEY SUBMIT ALONG WITH OFFER, ATTESTED COPIES OF EITHER EM-II CERTIFICATE HAVING DEEMED VALIDITY (FIVE YEARS FROM THE DATE OF ISSUE OF ACKNOWLEDGEMENT IN EM-II) OR VALID NSIC CERTIFICATE OR EM-II CERTIFICATE ALONG WITH CA CERTIFICATE (FORMAT ENCLOSED AS PER ANNEXURE-1 WHERE DEEMED VALIDITY OF EM-II CERTIFICATE OF FIVE YEARS HAS EXPIRED) APPLICABLE FOR THE RELEVANT F/Y (LATEST AUDITED).DATE TO BE RECKONED FOR DETERMINING THE DEEMED VALIDITY WILL BE THE DATE OF BID OPENING (PART -1 IN CASE OF TWO PART BID). NON SUBMISSION OF SUCH DOCUMENTS WILL LEAD TO CONSIDERATION OF THEIR BID AT PAR WITH OTHER BIDDERS. NO BENEFIT SHALL BE APPLICABLE FOR THIS ENQUIRY IF ANY DEFICIENCY IN THE ABOVE REQUIRED DOCUMENTS ARE NOT SUBMITTED BEFORE PRICE BID OPENING. IF THE TENDER IS TO BE SUBMITTED THROUGH e-procurement PORTAL, THEN THE ABOVE REQUIRED DOCUMENTS ARE TO BE UPLOADED ON THE PORTAL. DOCUMENTS SHOULD BE NOTARIZED OR ATTESTED BY A GAZETTED OFFICE. II.IN CASE OF ANY CHANGE IN THE MSE STATUS OF THE BIDDER, IT SHALL BE RESPONSIBILITY OF THE BIDDER TO NOTIFY THE CHANGE AS A PART OF THE BID DOCUMENT. IF AT A LATER DATE IT COMES TO NOTICE OF BHEL, THAT THE CHANGE IN THE STATUS HAS NOT BEEN INTIMATED BY THE BIDDER AND THE ORDER IS OBTAINED UNDER THE PREMISE OF AN MSE, THEN BHEL WOULD CANCEL THE PENDING ORDER AGAINST THIS TENDER AND TAKE NECESSARY ACTION SUSPENSION OF THE BUSSINESS DEALING WITH THE BIDDER AS PER PROCUREMENT POLICY OF BHEL. III.25 % OF THE TENDERED QUANTITY IS EARMARKED FOR MSE SUPPLIERS IN THIS TENDER. IV.OUT OF THIS 25% TENDERED QUANTITY RESERVED FOR MSE SUPPLIERS, 6.25% SHALL BE EARMARKED FOR PROCUREMENT FROM MSEs OWNED BY SC/ST ENTREPRENEURS. V.OUT OF THIS 25% TENDERED QUANTITY RESERVED FOR MSE SUPPLIERS, 3% SHALL BE EARMARKED FOR PROCUREMENT FROM MSEs OWNED BY WOMEN. VI.IN CASE MSE VENDOR PARTICIPATING IN THE TENDER QUOTES WITHIN THE PRICE BAND OF "L1+15%", THEY WILL BE ALLOWED TO SUPPLY THE 25% PORTION OF THE REQUIREMENT SUBJECT TO ACCEPTANCE OF L1 PRICE (ON LANDED COST BASIS) BY MSE VENDOR. IN CASE OF MORE THAN ONE SUCH MSE VENDOR WITHIN THE "L1+15% PRICE BAND" THE SUPPLY SHALL BE SHARED PROPORTIONATELY (TO 25% TENDERED QUANTITY). VII.IF THE L1 VENDOR HAPPENS TO BE A MSE VENDOR AGAINST ANY ITEM CODE, THEN 100% OF THE TENDERED QTY (FOR RESPECITVE ITEM CODE) SHALL BE PROPOSED TO ORDER ON THE L1 (MSE) VENDOR, EVEN THOUGH THERE MAY BE OTHER MSE VENDORS WITHIN THE "L1+15% PRICE BAND". VIII.IN CASE AFTER OPENING OF PRICE BID, IT IS SEEN THAT NO MSE HAS BECOME L1, THEN DEPENDING ON THE NATURE OF THE ITEM, IF IT IS NOT POSSIBLE TO SPLIT THE TENDERED ITEMS/QUANTITIES ON ACCOUNT OF REASONS LIKE CUSTOMER CONTRACT REQUIREMENTS OF SUPPLYING ONE MAKE FOR A GIVEN PROJECT OR TECHNICAL REASONS LIKE TENDERED ITEMS BEING A SYSTEM etc. THEN BHEL WOULD NOT COUNTER OFFER THE L1 PRICES EVEN THOUGH THERE MAY BE MSE BIDDERS WITHIN THE "L1+15% PRICE BAND" OF L1.	
44	THE **STARTUPS** AS DEFINED IN THE GAZETTE OF INDIA NOTIFICATION NO.: G.S.R. 127 (E) DATED 19/02/2019 WILL BE EXEMPTED FROM FULFILLING THE CRITERIA, IF MENTIONED, IN THE PQR (PRE-QUALIFYING REQUIREMENT) REGARDING PRIOR TURNOVER AND PRIOR EXPERIENCE. HOWEVER, THERE MAY BE CIRCUMSTANCES (LIKE PROCUREMENTS OF ITEMS RELATED TO PUBLIC SAFETY, HEALTH, CRITICAL SECURITY OPERATIONS AND EQUIPMENTS ETC.) WHERE BHEL MAY PREFER THE VENDORS TO HAVE PRIOR EXPERIENCE RATHER THAN GIVING ORDER TO NEW ENTITIES. FOR SUCH PROCUREMENTS, BHEL MAY NOT RELAX THE CRITERIA OF PRIOR EXPERIENCE/TURNOVER FOR THE STARTUPS.	
45	**PURCHASE PREFERENCE FOR INDIAN VENDORS:** FOR THIS PROCUREMENT, THE LOCAL CONTENT TO CATEGORIZE A SUPPLIER AS A CLASS I LOCAL SUPPLIER / CLASS II LOCAL SUPPLIER /NON LOCAL – SUPPLIER AND PURCHASE PREFERENCE TO CLASS I LOCAL SUPPLIER, IS AS DEFINED IN PUBLIC PROCUREMENT (PREFERNCE TO MAKE IN INDIA), ORDER 2017 DATED 04.06.2020 ISSUED BY DPIIT. IN CASE OF SUBSEQUENT ORDERS ISSUED BY THE NODAL MINISTRY, CHANGING THE DEFINITION OF LOCAL CONTENT FOR THE ITEMS OF THE NIT, THE SAME SHALL BE APPLICABLE EVEN IF ISSUED AFTER ISSUE OF THIS NIT, BUT BEFORE OPENING OF PART –II BIDS AGAINST THIS NIT.	

	MODEL CLAUSE FOR TENDER. I. ANY BIDDER FROM A COUNTRY WHICH SHARES A LAND BORDER WITH INDIA WILL BE ELIGIBLE TO BID IN THIS TENDER ONLY IF THE BIDDER IS REGISTERED WITH THE COMPETENT AUTHORITY. II. "BIDDER" (INCLUDING THE TERM 'TENDERER', 'CONSULTANT' OR 'SERVICE PROVIDER' IN CERTAIN CONTEXTS) MEANS ANY PERSON OR FIRM OR COMPANY, INCLUDING ANY MEMBER OF A CONSORTIUM OR JOINT VENTURE (THAT IS AN ASSOCIATION OF SEVERAL PERSONS, OR FIRMS OR COMPANIES), EVERY ARTIFICIAL JURIDICAL PERSON NOT FALLING IN ANY OF THE DESCRIPTIONS OF BIDDERS STATED HEREINBEFORE, INCLUDING ANY AGENCY BRANCH OR OFFICE CONTROLLED BY SUCH PERSON, PARTICIPATING IN A PROCUREMENT PROCESS. III. "BIDDER FROM A COUNTRY WHICH SHARES A LAND BORDER WITH INDIA" FOR THE PURPOSE OF THIS ORDER MEANS: - a) AN ENTITY INCORPORATED, ESTABLISHED OR REGISTERED IN SUCH A COUNTRY: OR b) A SUBSIDIARY OF AN ENTITY INCORPORATED, ESTABLISHED OR REGISTERED IN SUCH A COUNTRY; OR c) AN ENTITY SUBSTANTIALLY CONTROLLED THROUGH ENTITIES INCORPORATED, ESTABLISHED OR REGISTERED IN SUCH A COUNTRY; OR d) AN ENTITY WHOSE BENEFICIAL OWNER IS SITUATED IN SUCH A COUNTRY; OR e) AN INDIAN (OR OTHER) AGENT OF SUCH AN ENTITY; OR f) A NATURAL PERSON WHO IS A CITIZEN OF SUCH A COUNTRY; OR g) A CONSORTIUM OR JOINT VENTURE WHERE ANY MEMBER OF THE CONSORTIUM OR JOINT VENTURE FALLS UNDER ANY OF THE ABOVE IV. THE BENEFICIAL OWNER FOR THE PURPOSE OF (III) ABOVE WILL BE AS UNDER: 1. IN CASE OF A COMPANY OR LIMITED LIABILITY PARTNERSHIP, THE BENEFICIAL OWNER IS THE NATURAL PERSON (S) WHO, WHETHER ACTING ALONE OR TOGETHER, OR THROUGH ONE OR MORE JURIDICAL PERSON, HAS A CONTROLLING OWNERSHIP INTEREST OR WHO EXERCISES CONTROL THROUGH OTHER MEANS. EXPLANATION – a. "CONTROLLING OWNERSHIP INTEREST" MEANS OWNERSHIP OF OR ENTITLEMENT TO MORE THAN TWENTY-FIVE PER CENT. OF SHARES OR CAPITAL OR PROFITS OF THE COMPANY b. "CONTROL" SHALL INCLUDE THE RIGHT TO APPOINT MAJORITY OF THE DIRECTORS OR TO CONTROL THE MANAGEMENT OR POLICY DECISIONS INCLUDING BY VIRTUE OF THEIR SHAREHOLDING OR MANAGEMENT RIGHTS OR SHAREHOLDER'S AGREEMENTS OF VOTING AGREEMENTS; 2. IN CASE OF A PARTNERSHIP FIRM, THE BENEFICIAL OWNER IS THE NATURAL PERSON (S) WHO, WHETHER ACTING ALONE OR TOGETHER, OR THROUGH ONE OR MORE JURIDICAL OF CAPITAL OR PROFITS OF THE PARTNERSHIP; 3. IN CASE OF AN UNINCORPORATED ASSOCIATION OR BODY OF INDIVIDUALS, THE BENEFICIAL OWNER IS THE NATURAL PERSON (S), WHO, WHETHER ACTING ALONE OR TOGETHER, OR THROUGH ONE OR MORE JURIDICAL PERSON, HAS OWNERSHIP OF OR ENTITLEMENT TO MORE THAN FIFTEEN PERCENT OF THE PROPERTY OF CAPITAL OF PROFITS OF SUCH ASSOCIATION OR BODY OF INDIVIDUALS; 4. WHERE NO NATURAL PERSON IS IDENTIFIED UNDER (1) OR (2) OR (3) ABOVE, THE BENEFICIAL OWNER IS THE RELEVANT NATURAL PERSON WHO HOLDS THE POSITION OF SENIOR MANAGING OFFICIAL; 5. IN CASE OF TRUST, THE IDENTIFICATION OF BENEFICIAL OWNER (S) SHALL INCLUDE IDENTIFICATION OF THE AUTHOR OF THE TRUST, THE TRUSTEE, THE BENEFICIARIES WITH FIFTEEN PERCENT OR MORE INTEREST IN THE TRUST AND ANY OTHER NATURAL PERSON EXERCISING ULTIMATE EFFECTIVE CONTROL OVER THE TRUST THROUGH A CHAIN OF CONTROL OR OWNERSHIP. V. AN AGENT IS A PERSON EMPLOYED TO DO ANY ACT FOR ANOTHER, OR TO REPRESENT ANOTHER IN DEALINGS WITH THIRD PERSON. **CERTIFICATE:** IN ORDER TO AVAIL THE BENEFITS, VENDORS TO SUBMIT (ALONG WITH OFFER) THE SELF-CERTIFICATION THAT THE ITEM OFFERED MEETS THE CONTENT REQUIREMENT FOR CLASS-I/ CLASS-II LOCAL SUPPLIER AS THE CASE MAY BE, INDICATING THE PERCENTAGE OF LOCAL CONTENT. AND SHALL GIVE DETAILS OF LOCATION AT WHICH THE LOCAL VALUE ADDITION IS MADE (refer attached Make in India (Model Certificate no I).	
46	**FORCE MAJEURE** : NOTWITHSTANDING ANYTHING CONTAINED IN THE CONTRACT, NEITHER THE VENDOR NOR THE BHEL SHALL BE HELD RESPONSIBLE FOR TOTAL OR PARTIAL NON-EXECUTION OF ANY OF THE CONTRACTUAL OBLIGATIONS, SHOULD THE OBLIGATION BECOME UNREASONABLY ONEROUS OR IMPOSSIBLE DUE TO OCCURRENCE OF A 'FORCE MAJEURE' WHICH DIRECTLY AFFECTS THE OBLIGATIONS TO BE PERFORMED BY THE BHEL OR THE VENDOR ; SUCH EVENTS INCLUDE WAR, MILITARY OPERATIONS OF ANY NATURE, BLOCKAGES, REVOLUTIONS, INSURRECTIONS, RIOTS, CIVIL COMMOTIONS, INSURGENCY, SABOTAGE, ACTS OF PUBLIC ENEMY, FIRES, EXPLOSION, EPIDEMICS, QUARANTINE RESTRICTIONS, FLOODS, EARTHQUAKE, OR ACTS OF GOD, RESTRICTIONS BY GOVT. AUTHORITIES; OVER WHICH THE VENDOR OR THE BHEL HAS NO CONTROL. THE PARTY CLAIMING TO BE AFFECTED BY FORCE MAJEURE SHALL NOTIFY THE OTHER PARTY IN WRITING WITHOUT DELAY, WITHIN TWO WEEKS ON THE INTERVENTION AND ON THE CESSATION OF SUCH CIRCUMSTANCE. EXTENSION OF TIME SOUGHT BY THE VENDOR ALONG WITH SUPPORTING EVIDENCE AND SO GRANTED BY THE BHEL FOR THE SUPPLY/ WORK AFFECTED, IF ANY, SHALL NOT BE CONSTRUED AS WAIVER IN RESPECT OF REMAINING DELIVERIES. RESCHEDULING OF DELIVERIES ON ACCOUNT OF FORCE MAJEURE CONDITIONS, IF SO AGREED BY THE BHEL, WILL NOT ENTAIL THE VENDOR TO CLAIM ANY INCREASE IN THE PRICE ON WHATSOEVER ACCOUNT. NOTWITHSTANDING ABOVE PROVISIONS, BHEL SHALL RESERVE THE RIGHT TO CANCEL THE ORDER/ CONTRACT, WHOLLY OR PARTLY, IN ORDER TO MEET THE OVERALL PROJECT SCHEDULE AND MAKE ALTERNATIVE ARRANGEMENTS. IF DEEMED NECESSARY, BHEL MAY TAKEOVER PARTLY PROCESSED MATERIAL AT A MUTUALLY AGREED PRICE.	
47	**FRAUD PREVENTION POLICY :** THE BIDDER ALONG WITH ITS ASSOCIATE/ COLLABORATORS/ SUB-CONTRACTORS/ SUB-VENDORS/ CONSULTANTS/ SERVICE PROVIDERS SHALL STRICTLY ADHERE TO BHEL FRAUD PREVENTION POLICY DISPLAYED ON BHEL WEBSITE WWW.BHEL.COM AND SHALL IMMEDIATELY BRING TO THE NOTICE OF BHEL MANAGEMENT ABOUT ANY FRAUD OR SUSPECTED FRAUD AS SOON AS IT COMES TO THEIR NOTICE.	
48	**SHORT SHIPMENTS/ WARRANTY/GUARANTEE REPLACEMENTS**: IN CASE OF ANY SHORT SHIPMENT DURING INITIAL SUPPLY WHICH IS SUBSEQUENTLY DISPATCHED BY THE VENDOR OR ANY GUARANTEE / WARRANTY REPLACEMENTS SHALL BE DISPATCHED ON "FOR-BHEL STORES/DESIGNATED DESTINATION" BASIS FOR INDIGENOUS ITEMS. TAXES, IF ANY PAID BY INDIGENOUS VENDOR FOR GUARANTEE /WARRANTEE REPLACEMENT, REPAIR ACTIVITY EXCLUDING SHORT SUPPLY SHALL BE TO VENDOR'S ACCOUNT ONLY. THE VENDOR HAS TO RAISE A CREDIT NOTE FOR SHORT SUPPLIED QUANTITY AS PER GST PROVISIONS.	
49	**E WAY BILL**: THE SUPPLIER HAS TO ARRANGE FOR E WAY BILL AS APPLICABLE FOR ANY MOVEMENT OF GOODS ALONG WITH OTHER PRESCRIBED DOCUMENTS AS PER GST LAW. THE SUPPLIER HAS ALSO TO COMPLY WITH ANY AMENDMENT AS PRESCRIBED FROM TIME TO TIME UNDER E WAY BILL RULE. ANY FINANCIAL IMPLICATION ARISES ON BHEL DUE TO NONCOMPLIANCE OF E WAY BILL RULE WILL BE PASSED ON TO THE SUPPLIER.	
50	THE BIDDER DECLARES THAT THEY WILL NOT ENTER INTO ANY ILLEGAL OR UNDICLOSED AGREEMENT OR UNDERSTANDING, WHETHER FORMAL OR INFORMAL WITH OTHER BIDDER (S). THIS APPLIES IN PARTICULAR TO PRICES, SPECIFICATIONS, CERTIFICATIONS, SUBSIDIARY CONTRACTS, SUBMISSION OR NON- SUBMISSION OF BIDS OR ANY OTHER ACTIONS TO RESTRICT COMPETITIVENES OR TO INTRODUE CARTELIZATION IN THE BIDDING PROCESS. IN CASE, THE BIDDER IS FOUND HAVING INDULGED IN ABOVE ACTIVITIES, SUITABLE ACTION SHALL BE TAKEN BY BHEL AS PER EXTANT POLICIES / GUIDELINES.	
51	THE BIDDER SHALL REGISTER THEMSELVES ON GEM PORTAL AND SHALL QUOTE THEIR GEM SELLER ID IN THEIR OFFER. GEM SELLER ID IS MANDATORY FOR PLACEMENT OF PURCHASE ORDER EXCEPT IN CASES WHERE FREE ISSUE MATERIAL IS TO BE ISSUED BY BHEL .	
52	**REJECTION/REPLACEMENT:** THE SELLER SHALL ARRANGE REPLACEMENT / REPAIR UNDER ITS OBLIGATION UNDER THE CONTRACT. SELLER SHALL BE GIVEN GROUND RENT FREE PERIOD OF 90 DAYS FROM THE DATE OF REJECTION TO LIFT REJECTED MATERIAL. BEYOND 90 DAYS, A GROUND RENT OF 0.25% OF VALUE OF REJECTED MATERIAL PER WEEK WILL BE LEVIED FOR A MAXIMUM PERIOD OF 4 WEEKS. BEYOND THIS PERIOD SUPPLIER FORFEITS THEIR RIGHT TO THE MATERIALS.	
53	**CONFLICT OF INTEREST AMONG BIDDERS/AGENTS:** A BIDDER SHALL NOT HAVE CONFLICT OF INTEREST WITH OTHER BIDDERS. SUCH CONFLICT OF INTEREST CAN LEAD TO ANTI-COMPETITIVE PRACTICES TO THE DETRIMENT OF PROCURING ENTITY'S INTERESTS. THE BIDDER FOUND TO HAVE A CONFLICT OF INTEREST SHALL BE DISQUALIFIED. A BIDDER MAY BE CONSIDERED TO HAVE A CONFLICT OF INTEREST WITH ONE OR MORE PARTIES IN THIS BIDDING PROCESS, IF a) THEY HAVE CONTROLLING PARTNER (S) IN COMMON; OR b) THEY RECEIVE OR HAVE RECEIVED ANY DIRECT OR INDIRECT SUBSIDY FINANCIAL STAKE FROM ANY OF THEM; OR c) THEY HAVE THE SAME LEGAL REPRESENTATIVE/AGENT FOR PURPOSES OF THIS BID; OR d) THEY HAVE RELATIONSHIP WITH EACH OTHER, DIRECTLY OR THROUGH COMMON THIRD PARTIES, THAT PUTS THEM IN A POSITION TO HAVE ACCESS TO INFORMATION ABOUT OR INFLUENCE ON THE BID OF ANOTHER BIDDER; OR e) BIDDER PARTICIPATES IN MORE THAN ONE BID IN THIS BIDDING PROCESS. PARTICIPATION BY A BIDDER IN MORE THAN ONE BID WILL RESULT IN THE DISQUALIFICATION OF ALL BIDS IN WHICH THE PARTIES ARE INVOLVED. HOWEVER, THIS DOES NOT LIMIT THE INCLUSION OF THE COMPONENTS/ SUB-ASSEMBLY ASSEMBLIES FROM ONE BIDDING MANUFACTURER IN MORE THAN ONE BID; OR f) IN CASES OF AGENTS QUOTING IN OFFSHORE PROCUREMENTS, ON BEHALF OF THEIR PRINCIPAL MANUFACTURERS, ONE AGENT CANNOT REPRESENT TWO MANUFACTURERS OR QUOTE ON THEIR BEHALF IN A PARTICULAR TENDER ENQUIRY. ONE MANUFACTURER CAN ALSO AUTHORISE ONLY ONE AGENT/DEALER. THERE CAN BE ONLY ONE BID FROM THE FOLLOWING:	

	1. THE PRINCIPAL MANUFACTURER DIRECTLY OR THROUGH ONE INDIAN AGENT ON HIS BEHALF; AND 2. INDIAN/FOREIGN AGENT ON BEHALF OF ONLY ONE PRINCIPAL; OR g) A BIDDER OR ANY OF ITS AFFILIATES PARTICIPATED AS A CONSULTANT IN THE PREPARATION OF THE DESIGN OR TECHNICAL SPECIFICATIONS OF THE CONTRACT THAT IS THE SUBJECT OF THE BID; OR H) IN CASE OF A HOLDING COMPANY HAVING MORE THAN ONE INDEPENDENTLY MANUFACTURING UNITS, OR MORE THAN ONE UNIT HAVING COMMON BUSINESS OWNERSHIP/MANAGEMENT, ONLY ONE UNIT SHOULD QUOTE. SIMILAR RESTRICTIONS WOULD APPLY TO CLOSELY RELATED SISTER COMPANIES. BIDDERS MUST PROACTIVELY DECLARE SUCH SISTER/ COMMON BUSINESS/ MANAGEMENT UNITS IN SAME/ SIMILAR LINE OF BUSINESS.	
54	VENDOR MUST VISIT OUR WEBSITE https://herp.bhel.com REGULARILY FOR ENQUIRY/PO/CLARIFICATIONS/FOR ANY LATEST UPDATES.	
55	MSME VENDORS CAN AVAIL BENEFITS OF PAYMENT THROUGH TREDS/RXIL.	
56	"THE OFFERS OF THE BIDDERS WHO ARE UNDER SUSPENSION AS ALSO THE OFFERS OF THE BIDDERS, WHO ENGAGE THE SERVICES OF THE FIRMS DEBARRED ACROSS BHEL, SHALL BE REJECTED. THE LIST OF FIRMS DEBARRED ACROSS BHEL IS AVAILABLE ON BHEL WEBSITE WWW.BHEL.COM. 1.0 INTEGRITY COMMITMENT, PERFORMANCE OF THE CONTRACT AND PUNITIVE ACTION THEREOF: 1.1. COMMITMENT BY BHEL: BHEL COMMITS TO TAKE ALL MEASURES NECESSARY TO PREVENT CORRUPTION IN CONNECTION WITH THE TENDER PROCESS AND EXECUTION OF THE CONTRACT. BHEL WILL DURING THE TENDER PROCESS TREAT ALL BIDDER(S) IN A TRANSPARENT AND FAIR MANNER, AND WITH EQUITY. 1.2. COMMITMENT BY BIDDER/ SUPPLIER/ CONTRACTOR: 1.2.1. THE BIDDER/ SUPPLIER/ CONTRACTOR COMMIT TO TAKE ALL MEASURES TO PREVENT CORRUPTION AND WILL NOT DIRECTLY OR INDIRECTLY INFLUENCE ANY DECISION OR BENEFIT WHICH HE IS NOT LEGALLY ENTITLED TO NOR WILL ACT OR OMIT IN ANY MANNER WHICH TANTAMOUNT TO AN OFFENCE PUNISHABLE UNDER ANY PROVISION OF THE INDIAN PENAL CODE, 1860 OR ANY OTHER LAW IN FORCE IN INDIA. 1.2.2. THE BIDDER/ SUPPLIER/ CONTRACTOR WILL, WHEN PRESENTING HIS BID, DISCLOSE ANY AND ALL PAYMENTS HE HAS MADE, AND IS COMMITTED TO OR INTENDS TO MAKE TO AGENTS, BROKERS OR ANY OTHER INTERMEDIARIES IN CONNECTION WITH THE AWARD OF THE CONTRACT AND SHALL ADHERE TO RELEVANT GUIDELINES ISSUED FROM TIME TO TIME BY GOVT. OF INDIA/ BHEL. 1.2.3. THE BIDDER/ SUPPLIER/ CONTRACTOR WILL PERFORM/ EXECUTE THE CONTRACT AS PER THE CONTRACT TERMS & CONDITIONS AND WILL NOT DEFAULT WITHOUT ANY REASONABLE CAUSE, WHICH CAUSES LOSS OF BUSINESS/ MONEY/ REPUTATION, TO BHEL. IF ANY BIDDER/ SUPPLIER/ CONTRACTOR DURING PRE-TENDERING/ TENDERING/ POST TENDERING/ AWARD/ EXECUTION/ POST-EXECUTION STAGE INDULGES IN MALPRACTICES, CHEATING, BRIBERY, FRAUD OR AND OTHER MISCONDUCT OR FORMATION OF CARTEL SO AS TO INFLUENCE THE BIDDING PROCESS OR INFLUENCE THE PRICE OR ACTS OR OMITS IN ANY MANNER WHICH TANTAMOUNT TO AN OFFENCE PUNISHABLE UNDER ANY PROVISION OF THE INDIAN PENAL CODE, 1860 OR ANY OTHER LAW IN FORCE IN INDIA, THEN, ACTION MAY BE TAKEN AGAINST SUCH BIDDER/ SUPPLIER/ CONTRACTOR AS PER EXTANT GUIDELINES OF THE COMPANY AVAILABLE ON WWW. BHEL.COM AND/OR UNDER APPLICABLE LEGAL PROVISIONS".	
57	**BID SECURITY OR EARNEST MONEY DEPOSIT (EMD):** TO SAFE GUARD AGAINST A BIDDER'S WITHDRAWING OR ALTERING ITS/ HIS BID DURING THE BID VALIDITY PERIOD, BID SECURITY [ALSO KNOWN AS EARNEST MONEY DEPOSIT (EMD)] SHALL BE OBTAINED FROM THE BIDDERS ALONG WITH THEIR BIDS (EXCEPT MICRO AND SMALL ENTERPRISES (MSES) OR STARTUPS AS RECOGNIZED BY DEPARTMENT FOR PROMOTION OF INDUSTRY AND INTERNAL TRADE (DPIIT)). THE AMOUNT OF EMD SHALL BE AS MENTIONED IN ENQUIRY. 1**. MODES OF DEPOSIT** A) THE EMD MAY BE ACCEPTED ONLY IN THE FOLLOWING FORMS AND THE SAME MUST BE SUBMITTED BEFORE TENDER OPENING: (I) ELECTRONIC FUND TRANSFER CREDITED IN BHEL ACCOUNT. (II) BANKER'S CHEQUE/ PAY ORDER/ DEMAND DRAFT, IN FAVOUR OF BHEL. (III) FIXED DEPOSIT RECEIPT (FDR).(IN THE NAME OF " BIDDER'S NAME A/C BHEL'') (IV) BANK GUARANTEE FROM ANY OF THE SCHEDULED BANKS. (V) INSURANCE SURETY BONDS. B) IN CASE THE EMD IS MORE THAN RUPEES TWO LAKH AND IN CASE OF FOREIGN BIDDERS, IT MAY BE IN THE FORM OF A BANK GUARANTEE (IN EQUIVALENT FOREIGN EXCHANGE AMOUNT, IN CASE OF FOREIGN BIDDERS) ISSUED/ CONFIRMED FROM ANY OF THE SCHEDULED COMMERCIAL BANK IN INDIA IN AN ACCEPTABLE FORM. THE EMD SHALL REMAIN VALID FOR A PERIOD OF 45 (FORTY-FIVE) DAYS BEYOND THE FINAL BID VALIDITY PERIOD. **2. FORFEITURE OF EMD** I) A BIDDER'S EMD WILL BE FORFEITED IF THE BIDDER WITHDRAWS OR AMENDS ITS/HIS TENDER OR IMPAIRS OR DEROGATES FROM THE TENDER IN ANY RESPECT WITHIN THE PERIOD OF VALIDITY OF THE TENDER OR IF THE SUCCESSFUL BIDDER FAILS TO FURNISH THE REQUIRED PERFORMANCE SECURITY WITHIN THE SPECIFIED PERIOD MENTIONED IN THE TENDER. (II) EMD BY THE TENDERER SHALL BE WITHHELD IN CASE ANY ACTION ON THE BIDDER IS ENVISAGED UNDER THE PROVISIONS OF EXTANT "GUIDELINES ON SUSPENSION OF BUSINESS DEALINGS WITH SUPPLIERS/ CONTRACTORS" AND FORFEITED/ RELEASED BASED ON THE ACTION AS DETERMINED UNDER THESE GUIDELINES. **3. RETURN OF EMD** (I) BID SECURITIES OF THE UNSUCCESSFUL BIDDERS SHALL BE RETURNED TO BIDDER AT THE EARLIEST AFTER EXPIRY OF THE FINAL BID VALIDITY PERIOD AND LATEST BY THE 30TH DAY AFTER THE AWARD OF THE CONTRACT. HOWEVER, IN CASE OF TWO PACKET OR TWO STAGE BIDDING, BID SECURITIES OF UNSUCCESSFUL BIDDERS DURING FIRST STAGE I.E. TECHNICAL EVALUATION ETC. SHALL BE RETURNED WITHIN 30 DAYS OF DECLARATION OF RESULT OF FIRST STAGE I.E. TECHNICAL EVALUATION ETC. (II) BID SECURITY SHALL BE REFUNDED TO THE SUCCESSFUL BIDDER ON CONCLUSION OF THE ORDER/ RECEIPT OF A PERFORMANCE SECURITY (IF CALLED IN THE TENDER). (III) EMD SHALL NOT CARRY ANY INTEREST.	
58	**PERFORMANCE SECURITY (PS):** TO ENSURE DUE PERFORMANCE OF THE CONTRACT, PERFORMANCE BANK GUARANTEE (PBG) OR SECURITY DEPOSIT (SD), HEREAFTER REFERRED AS PERFORMANCE SECURITY SHALL BE OBTAINED FROM THE SUCCESSFUL BIDDER AWARDED THE CONTRACT. THE PERFORMANCE SECURITY OF REQUIRED AMOUT IS TO BE SUBMITTED BY THE DATE SPECIFIED IN THE PO/CONTRACT. 1**. MODES OF DEPOSIT:** A) PERFORMANCE SECURITY MAY BE FURNISHED IN THE FOLLOWING FORMS: (I) LOCAL CHEQUES OF SCHEDULED BANKS (SUBJECT TO REALIZATION)/ PAY ORDER/ DEMAND DRAFT/ ELECTRONIC FUND TRANSFER IN FAVOUR OF BHEL. (II) BANK GUARANTEE FROM SCHEDULED BANKS / PUBLIC FINANCIAL INSTITUTIONS AS DEFINED IN THE COMPANIES ACT. THE BANK GUARANTEE FORMAT SHOULD HAVE THE APPROVAL OF BHEL. (III) FIXED DEPOSIT RECEIPT ISSUED BY SCHEDULED BANKS / PUBLIC FINANCIAL INSTITUTIONS AS DEFINED IN THE COMPANIES ACT (FDR SHOULD BE IN THE NAME OF THE **CONTRACTOR, A/C BHEL**). (IV) SECURITIES AVAILABLE FROM INDIAN POST OFFICES SUCH AS NATIONAL SAVINGS CERTIFICATES, KISAN VIKAS PATRAS ETC. (HELD IN THE NAME OF CONTRACTOR FURNISHING THE SECURITY AND DULY ENDORSED/ HYPOTHECATED/ PLEDGED, AS APPLICABLE, IN FAVOUR OF BHEL). (V) INSURANCE SURETY BOND. (NOTE: BHEL WILL NOT BE LIABLE OR RESPONSIBLE IN ANY MANNER FOR THE COLLECTION OF INTEREST OR RENEWAL OF THE DOCUMENTS OR IN ANY OTHER MATTER CONNECTED THEREWITH) B) IN CASE OF GTE TENDERS, THE PERFORMANCE SECURITY SHALL BE IN THE SAME CURRENCY AS THE CONTRACT AND MUST CONFORM TO UNIFORM RULES FOR DEMAND GUARANTEES (URDG 758) - AN INTERNATIONAL CONVENTION REGULATING INTERNATIONAL SECURITIES. (C) PERFORMANCE SECURITY IS TO BE FURNISHED WITHIN A SPECIFIED DATE (GENERALLY 14(FOURTEEN) DAYS AFTER NOTIFICATION OF THE AWARD) AND IT SHOULD REMAIN VALID FOR A PERIOD OF 60 (SIXTY) DAYS BEYOND THE DATE OF COMPLETION OF ALL CONTRACTUAL OBLIGATIONS OF THE SUPPLIER, INCLUDING WARRANTY OBLIGATIONS. 2. **FORFEITURE OF PERFORMANCE SECURITY:** THE PERFORMANCE SECURITY WILL BE FORFEITED AND CREDITED TO BHEL'S ACCOUNT IN THE EVENT OF A BREACH OF CONTRACT BY THE SUPPLIER. 3. **RETURN OF PERFORMANCE SECURITY (PS):** PS SHALL BE REFUNDED TO THE BIDDER WITHOUT INTEREST, AFTER HE DULY PERFORMS AND COMPLETES THE CONTRACT IN ALL RESPECTS BUT NOT LATER THAN 60(SIXTY) DAYS OF COMPLETION OF ALL SUCH OBLIGATIONS INCLUDING THE WARRANTY UNDER THE CONTRACT. **4. THE PERFORMANCE SECURITY SHALL NOT CARRY ANY INTEREST.**	
59	**BREACH OF CONTRACT, REMEDIES AND TERMINATION:** IN CASE OF BREACH OF CONTRACT, WHEREVER THE VALUE OF SECURITY INSTRUMENTS LIKE PERFORMANCE BANK GUARANTEE AVAILABLE WITH BHEL AGAINST THE SAID CONTRACT IS ATLEAST 10% OF THE CONTRACT VALUE, THE SAME BE ENCASHED. IN CASE THE VALUE OF THE SECURITY	

	INSTRUMENTS AVAILABLE IS LESS THAN 10% OF THE CONTRACT VALUE, THE BALANCE AMOUNT BE RECOVERED FROM OTHER FINANCIAL REMEDIES (I.E. AVAILABLE BILLS OF THE CONTRACTOR, RETENTION AMOUNT, ETC. WITH BHEL) OR LEGAL REMEDIES BE PURSUED. FURTHER, LEVY OF LIQUIDATED DAMAGES, DEBARMENT, TERMINATION, DE-SCOPING, SHORT-CLOSURE, ETC., SHALL BE APPLIED AS PER PROVISIONS OF THE CONTRACT.	

NOTE:

1. PLEASE FILL IN THIS FORMAT AND SEND COMPULSORILY ALONG WITH QUOTATION WITH VENDOR'S SEAL, SIGNATURE AND DATE.

VENDOR SIGNATURE ALONG WITH SEAL AND DATE:

FIRST ANGLE PROJECTION

(ALL DIMENSIONS ARE IN mm)

C.C.S.

DRG. NO. 1-61-000-00363

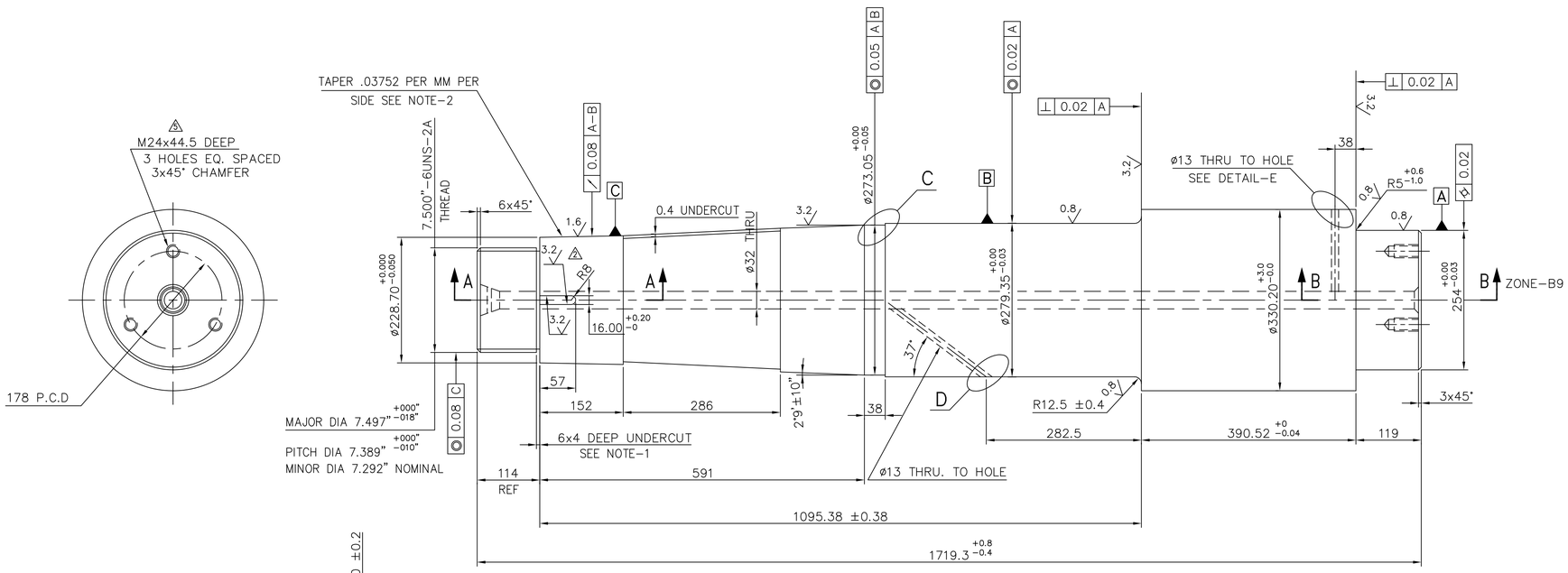

NOTES:-

1. BREAK ALL SHARP EDGES AND CORNERS UNLESS OTHERWISE NOTED.
2. SUPPLY AS PER CUSTOMERS APPROVED QUALITY PLAN
3. ATTEST MATERIAL.

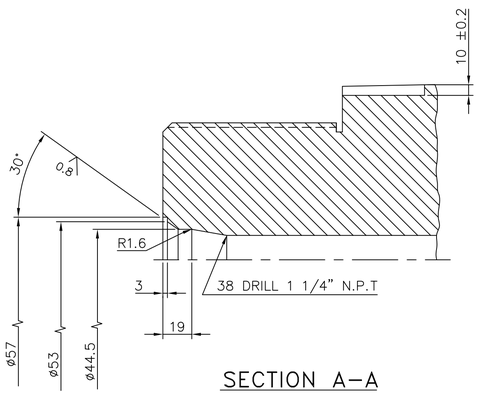

SECTION A-A

SCALE-1:2

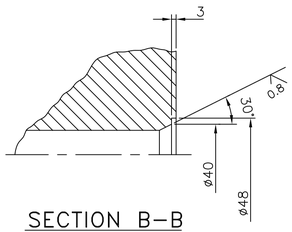

SECTION B-B

SCALE-1:2

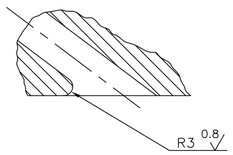

DETAIL-D

SCALE-1:1

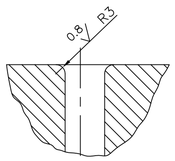

DETAIL-E

SCALE-1:1

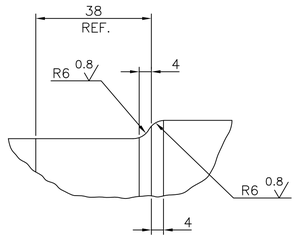

DETAIL-C

SCALE-1:1

ITEM NO	DESCRIPTION	DRAWING NO.	VAR. NO.	RAW MATERIAL SIZE OR CASTING DRG.NO. OR FORGING DRG.NO.	MATERIAL CODE / MATERIAL SPECN.	NET WT.	GROSS WT. / QUANTITY
	FORGING			3-61-000-90173	BA9413253137	790	036
					AA19332		

THE FOLLOWING CONDITIONS APPLY EXCEPT OTHERWISE STATED...

1. REF.TO HY0230261 FOR UNSPECIFIED TOLERANCES.
2. CHAMFER M/CD SHARP EDGES 1.2 TO 1.0 AT 45°.
3. INTERNAL M/CD CORNER RADII 1 TO 0.7.
4. THE SURFACE ROUGHNESS WHEREVER NOT SHOWN SHALL BE TAKEN FROM THE SURFACE ROUGHNESS SHOWN OUT SIDE BACK SLASHES GIVEN AT THE TOP MOST RIGHT CORNER OF THE DRG.

TYPE OF PRODUCT OR NAME OF CUSTOMER/PROJECT: 1003 XRP BOWL MILL

BHARAT HEAVY ELECTRICALS LTD. HYDERABAD

	NAME	SIGN.	DATE
DRN.	N.D.S		15.4.99
CHD.	S.G		15.4.99
APPD.	K.M.RAO		15.4.99

NO.OF VAR.

DEPT. PULV. ENGG | CODE 446 | SCALE 1:5 | WEIGHT (KG) 790.036 | REF. TO ASSY DRG. C-101-01082/R1 CE-P/N-101-01082 | ITEM NO. | NO.OF ITEMS

TITLE: JOURNAL SHAFT

DRAWING NO. 1-61-000-00363 | REV. 07

SHEET NO. | NO OF SHEETS

REV.	DATE	ALTERED / CHECKED / APPD.	ZONE	
07	02.07.03		ZONE	2 DEG 9' ± 10" WAS 2 DEG 9' (REF) SLOT FOR BEARING REMOVAL DELETED BASED ON SHOP FEEDBACK. TOL ON ø279.35 & 254 WAS +0.0/-0.02. NOTES 1-4,6&8 DELETED,RENUMBERED.
06	23.01.99		ZONE	DRG. REVISED ON AUTOCAD
05	11.02.92		ZONE G-11	M24 WAS 1"-8UNC-2 TAP
04	08.08.91		ZONE E-3	U.T. CAT-III WAS CAT-IV NOTE 8 ADDED
03	07.01.91		ZONE	CE MATERIAL SPEC. DELETED
02	20.05.88		ZONE	KEY WAY MACHINING CORRECTED IN DET 'F' SLOT LENGTH INCLUDES MILLING CUTTER RELIEF
01	21.08.87		ZONE	DETAIL-F ADDED SHOWING SLOTS FOR BEARING REMOVAL

THE INFORMATION ON THIS DOCUMENT IS THE PROPERTY OF BHARAT HEAVY ELECTRICALS LIMITED.
IT MUST NOT BE USED DIRECTLY OR INDIRECTLY IN ANY WAY DETRIMENTAL TO THE INTEREST OF THE COMPANY

COMPUTER FILE NAME : 16100363.DWG

REF. DRG. NO. | SIGN. AND DATE | INVENTORY NO

FIRST ANGLE PROJECTION

(ALL DIMENSIONS ARE IN mm)

C.C.S.

DRG. NO. 1-61-000-00365

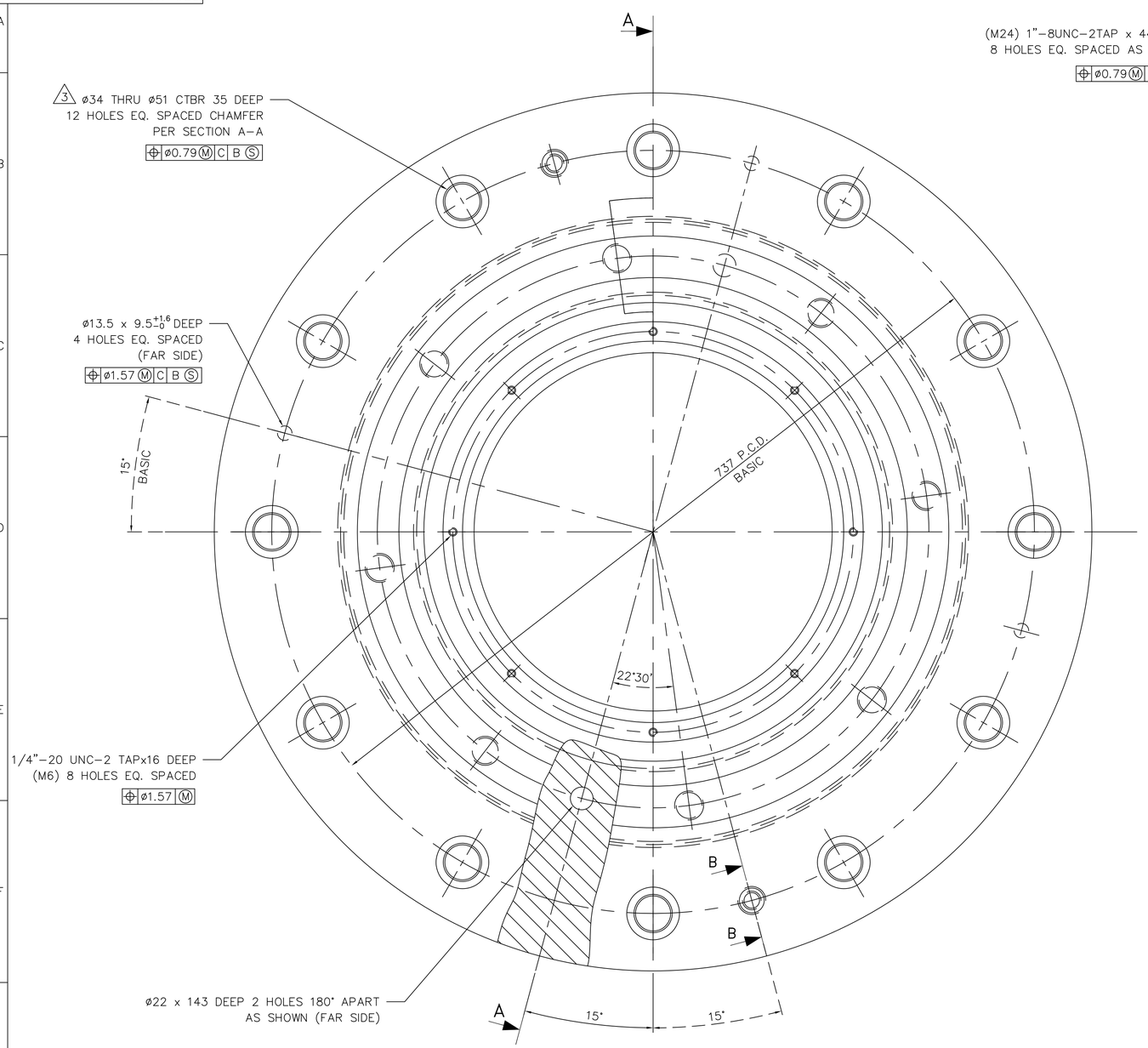

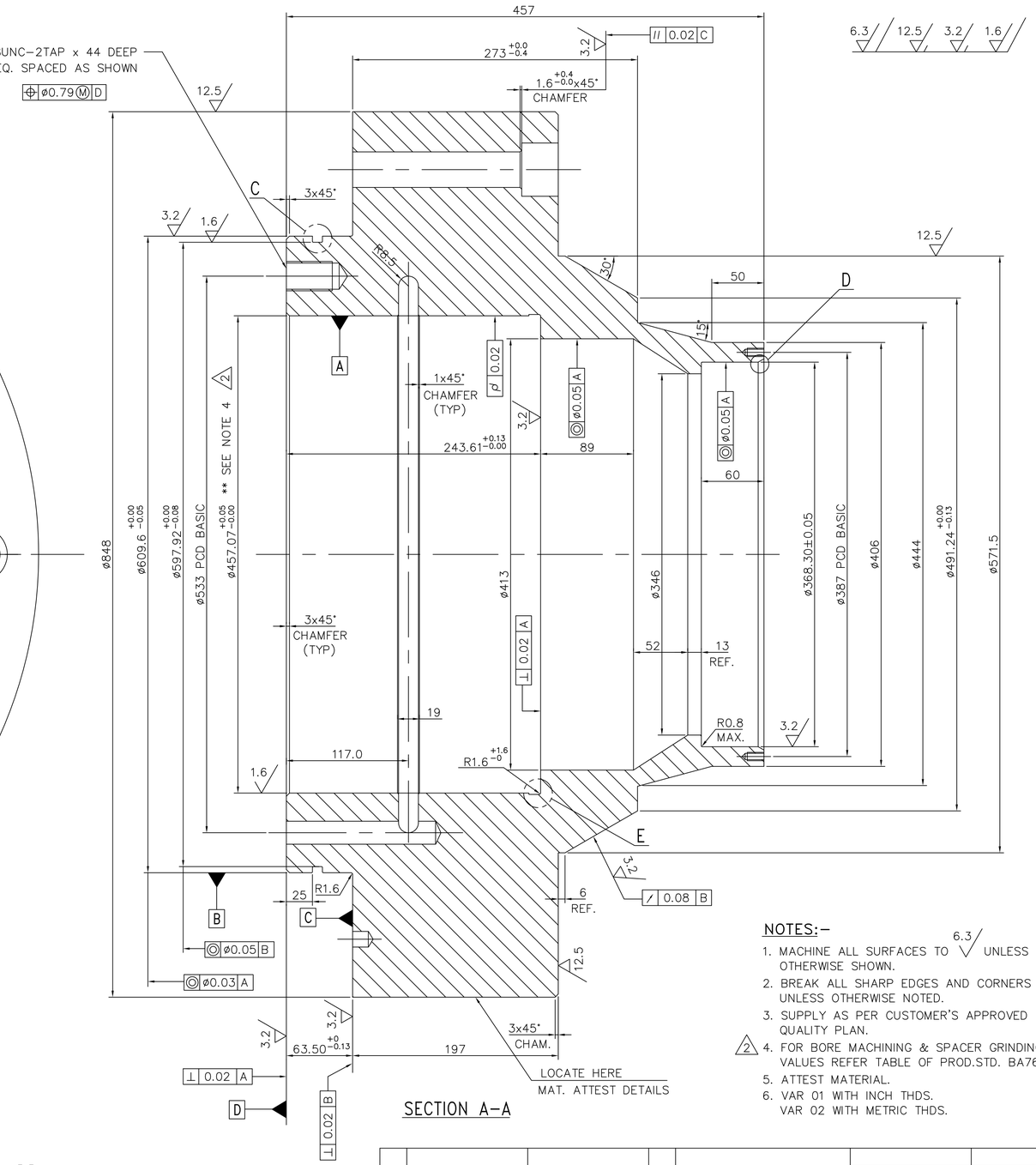

SECTION A–A

NOTES:–

1. MACHINE ALL SURFACES TO 6.3 UNLESS OTHERWISE SHOWN.
2. BREAK ALL SHARP EDGES AND CORNERS UNLESS OTHERWISE NOTED.
3. SUPPLY AS PER CUSTOMER'S APPROVED QUALITY PLAN.
4. (2) FOR BORE MACHINING & SPACER GRINDING VALUES REFER TABLE OF PROD.STD. BA76002.
5. ATTEST MATERIAL.
6. VAR 01 WITH INCH THDS.
   VAR 02 WITH METRIC THDS.

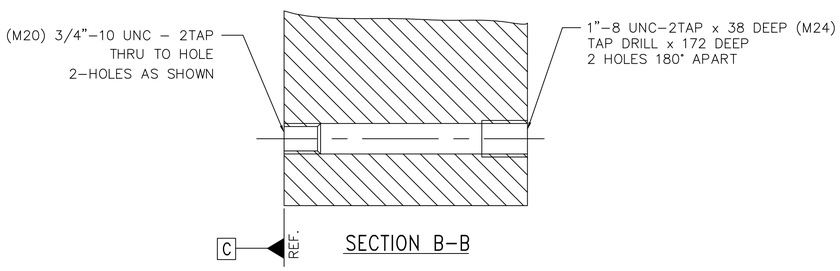

SECTION B–B

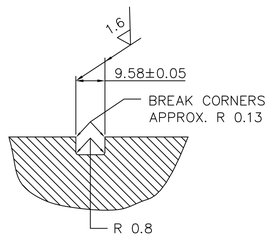

DETAIL–C

SCALE 1:1

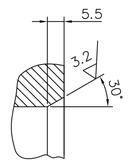

DETAIL–D

SCALE 1:1

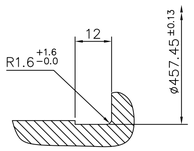

DETAIL–E

ENLARGED VIEW OPTIONAL MACHINING

ITEM NO	DESCRIPTION	DRAWING NO.	VAR. NO.	RAW MATERIAL SIZE OR CASTING DRG.NO. OR FORGING DRG.NO.	MATERIAL CODE / MATERIAL SPECN.	NET WT.	GROSS WT. / QUANTITY
01	FORGING ø848 x 457 LONG	3–61–000–90168			BA9413221162 / AA 19332	748.767	

THE FOLLOWING CONDITIONS APPLY EXCEPT OTHERWISE STATED...

1. REF.TO HY0230261 FOR UNSPECIFIED TOLERANCES.
2. CHAMFER M/CD SHARP EDGES 1.2 TO 1.0 AT 45°.
3. INTERNAL M/CD CORNER RADII 1 TO 0.7.
4. THE SURFACE ROUGHNESS WHEREVER NOT SHOWN SHALL BE TAKEN FROM THE SURFACE ROUGHNESS SHOWN OUT SIDE BACK SLASHES GIVEN AT THE TOP MOST RIGHT CORNER OF THE DRG.

TYPE OF PRODUCT OR NAME OF CUSTOMER/PROJECT: 1003 XRP BOWL MILL

BHEL — BHARAT HEAVY ELECTRICALS LTD. HYDERABAD

	NAME	SIGN.	DATE	NO.OF VAR.
DRN.	N.D.S		15.4.99	
CHD.	S.G		15.4.99	
APPD.	K.M.RAO		15.4.99	

DEPT.	SCALE	WEIGHT (KG)	REF. TO ASSY DRG.	ITEM NO.	NO.OF ITEMS
PULV. ENGG	1:2.5	748.767	C–101–01081/5 CE: P/N: 101–01081		
CODE 446					

TITLE: UPPER JOURNAL HOUSING

DRAWING NO. 1-61-000-00365 — REV. 06 — SHEET NO. — NO OF SHEETS

REV.	DATE	ALTERED / CHECKED	APPD.	ZONE
06	10.8.01			D–7 G–9
05	09.09.2k			B–7
04	23.01.99			
03	07.01.91			C–2 H12
02	03.05.88			
01	07.04.88			

- REV. 06: TOL ON ø609.6 WAS +0.00/–0.03. LOCATION FOR MAT ATTEST INDICATED.
- REV. 05: SURFACE FINISH 1.6 WAS 0.8
- REV. 04: DRAWING REVISED ON AUTOCAD NOTES 5&6 ADDED
- REV. 03: C.E.MATERIAL SPECIFICATION DELETED; ø34 WAS ø33
- REV. 02: NOTE 4 ADDED
- REV. 01: 19 MM GROOVE PROVIDED & ø19 x 40 DEEP 2 HOLES DELETED

THE INFORMATION ON THIS DOCUMENT IS THE PROPERTY OF BHARAT HEAVY ELECTRICALS LIMITED.
IT MUST NOT BE USED DIRECTLY OR INDIRECTLY IN ANY WAY DETRIMENTAL TO THE INTEREST OF THE COMPANY

COMPUTER FILE NAME : 16100365.DWG

REF. DRG. NO. — SIGN. AND DATE — INVENTORY NO.

FIRST ANGLE PROJECTION

(ALL DIMENSIONS ARE IN mm)

DRG. NO.1-61-004-01183 SH.01 OF 01

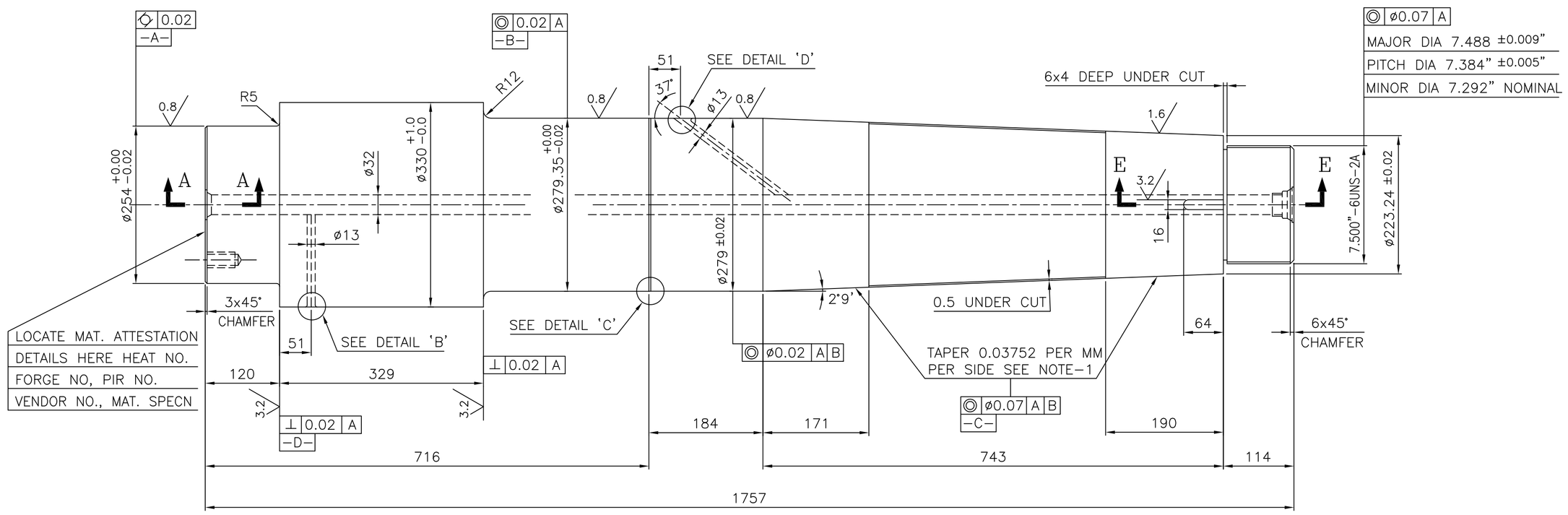

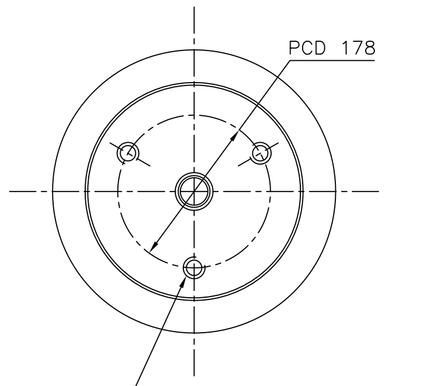

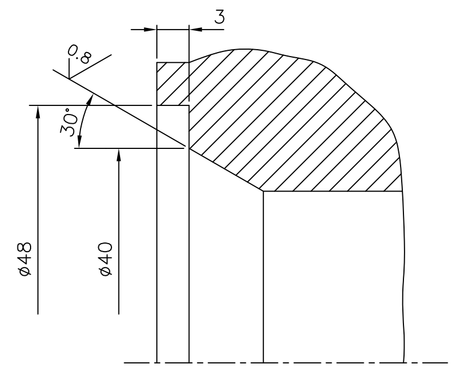

SECTION "AA"

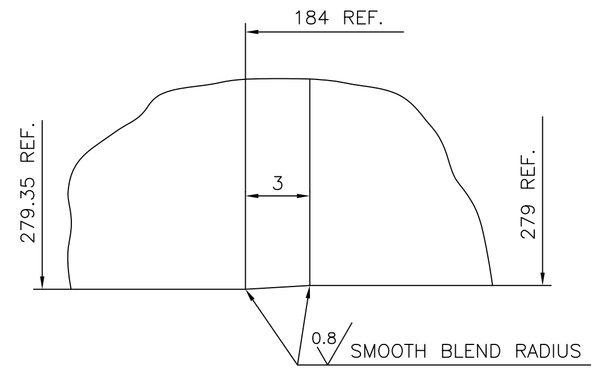

DETAIL "C"

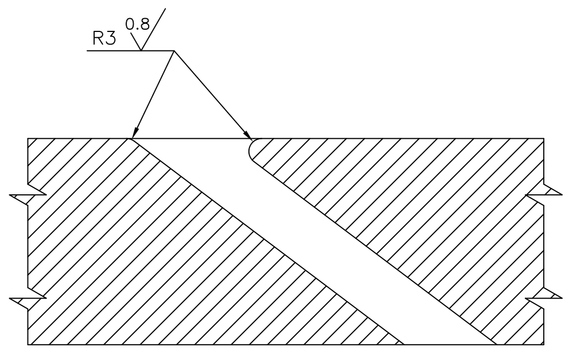

DETAIL "D"

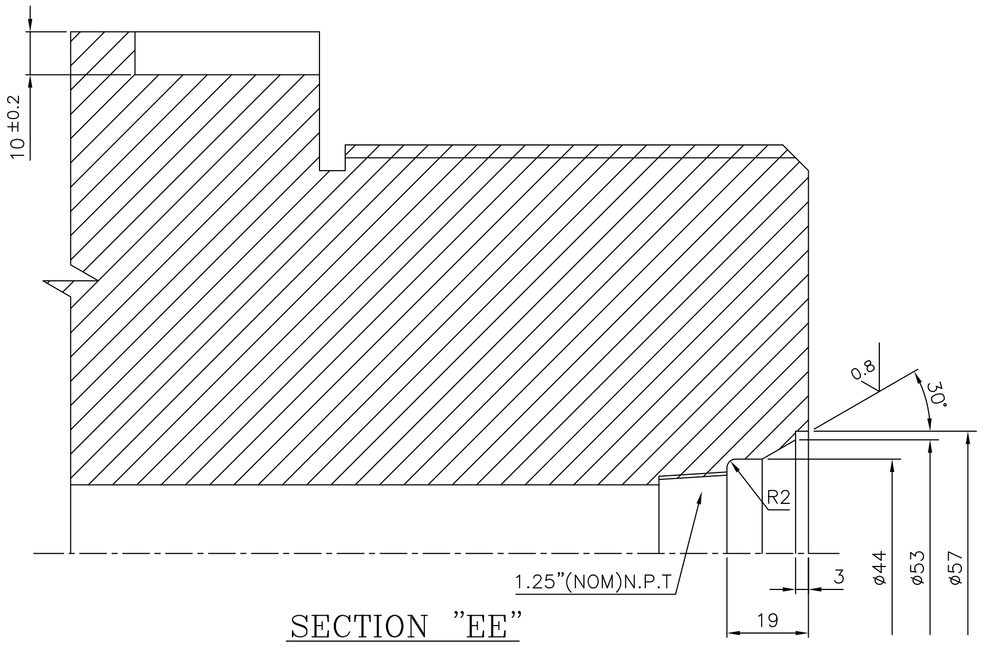

SECTION "EE"

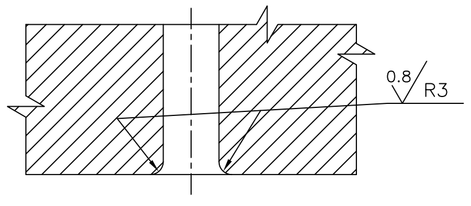

DETAIL "B"

NOTES:-

01. TAPER MUST FIT FULL CONTACT RING GAUGE WITH MIN OF 80% CONTACT BANDS OF NO CONTACT MUST NOT EXCEED 10° OF ARC.
02. ALL DIAMETERS TO BE CONCENTRIC WITH DATUMS A & B WITHIN 0.25 T.I.R UNLESS OTHERWISE SPECIFIED.
03. ALL FILLETS 0.8
04. REFER DRG. No. 3-61-004-90184 FOR ROUGH FORGING.
05 BREAK ALL SHARP EDGES.
06 VAR. 01 METRIC THREADING & VAR. 02 INCH THREADING.

MATERIAL ATTESTATION

ITEM NO.	DESCRIPTION	DRAWING NO.	VAR NO.	RAW MATERIAL SIZE OR CASTING DRG. NO. OR FORGING DRG. NO.	MATERIAL CODE / MATERIAL SPECN.	NET WT.	GROSS WT
01	FORGING				BA9413253242		799.00
					AA19332	1	

THE FOLLOWING CONDITIONS APPLY EXCEPT OTHERWISE STATED.

1. REF. TO HY0230261 FOR UNSPECIFIED TOLERANCES.
2. CHAMFER M/CD. SHARP EDGES 1.2 TO 1.0 AT 45°
3. INTERNAL M/CD. CORNER RADII 1 TO 0.7
4. THE SURFACE ROUGHNESS WHERE-EVER NOT SHOWN SHALL BE TAKEN FROM THE SURFACE ROUGHNESS SHOWN OUT SIDE THE BACK SLASH GIVEN ON THE TOP MOST RIGHT CORNER OF THE DRG.

TYPE OF PRODUCT
NAME OF CUSTOMER/PROJECT: 1103 XRP BOWL MILL

BHEL — BHARAT HEAVY ELECTRICALS LIMITED, HYDERABAD

	NAME	SIGN.	DATE	NO.OF VAR.
DRN.	UNIC		10.06.99	–
CHD.	ND.SAMUEL		10.06.99	
APPD.	S.GHATGE		10.06.99	

DEPT.	UNTOL. DIMS. GR.		SCALE	WEIGHT (KG)	REF. TO ASSY DRG.	ITEM NO.	NO.OF ITEMS
PULV ENGG. CODE 446	Ø/M/F		1:5	799.00	1-61-004-01190	09	30

TITLE: JOURNAL SHAFT

CARD CODE

DRAWING NO. 1-61-004-01183 REV. 02

SHEET NO. 01 NO OF SHEETS 01

REV.	DATE	ALTD.	APPD.	ZONE
		CHD.		

REV.	DATE	ALTD.	APPD.	ZONE
02	10.06.99	CHD.		
DRG. REDRAWN INCORPORATING THE ALL PREVIOUS REV. VARIANTS ADDED.				

REV.	DATE	ALTD.	APPD.	ZONE
01	10.11.93	CHD.		
TOLERANCE ADDED FOR ø254 MAT.CODE ADDED, MACHINING SYMBOLS ADDED ON TOP RIGHT CRONER NOTE 5 & MAT. AT TESTATION DETAILS ADDED.				G-12 B-1 H-1

THE INFORMATION ON THIS DOCUMENT IS THE PROPERTY OF BHARAT HEAVY ELECTRICALS LIMITED. IT MUST NOT BE USED DIRECTLY OR INDIRECTLY IN ANY WAY DETRIMENTAL TO THE INTEREST OF THE COMPANY

INVENTORY NO | SIGN. AND DATE | REF. DRG. NO. 1-61-004-01190 | COMPUTER FILE NAME 16101183.DWG

FIRST ANGLE PROJECTION

(ALL DIMENSIONS ARE IN mm)

DRG. NO. 2-61-088-02056 | SH. 01 OF 01

THE INFORMATION ON THIS DOCUMENT IS THE PROPERTY OF BHARAT HEAVY ELECTRICALS LIMITED. IT MUST NOT BE USED DIRECTLY OR INDIRECTLY IN ANY WAY DETRIMENTAL TO THE INTEREST OF THE COMPANY

COMPUTER FILE NAME 26102056.DWG

REF. DRG. NO. (C-101-00178A/13)

SIGN. AND DATE

INVENTORY NO

GENERAL DIMENSIONAL LIMITS,FITS & TOLERANCES AS PER HY0230261

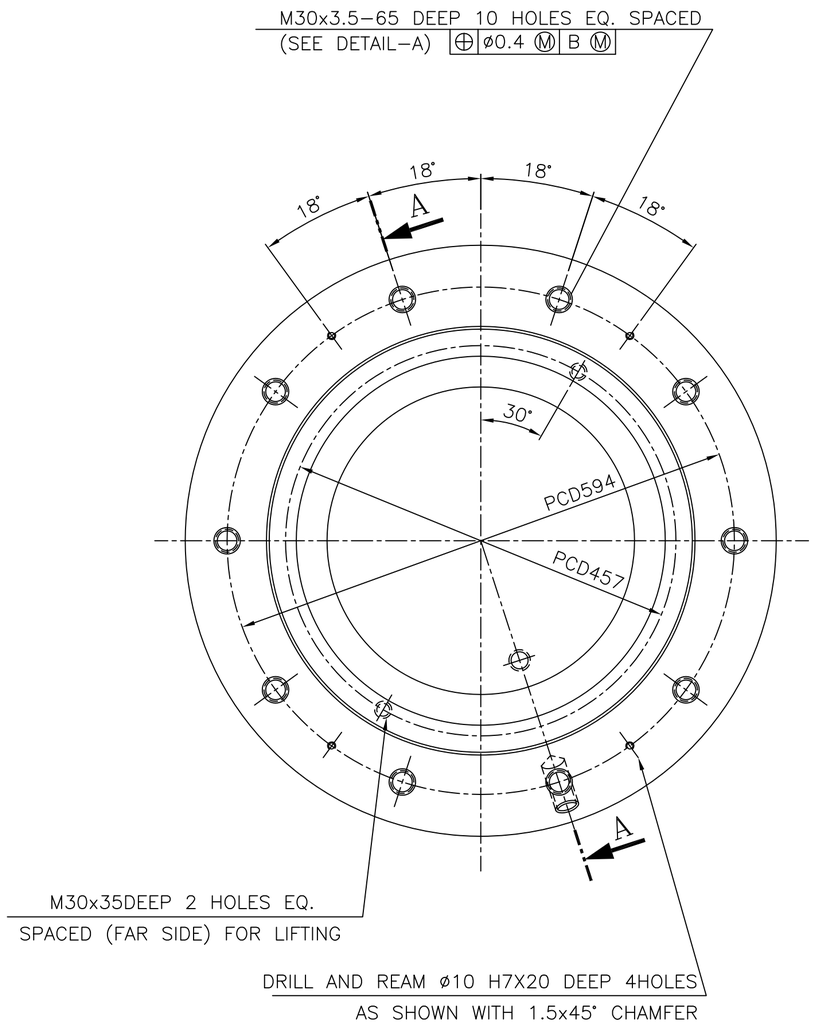

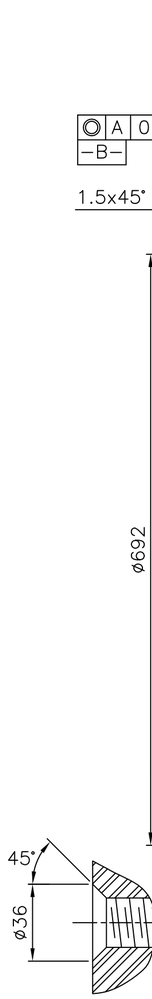

DETAIL-A
10 PLACES

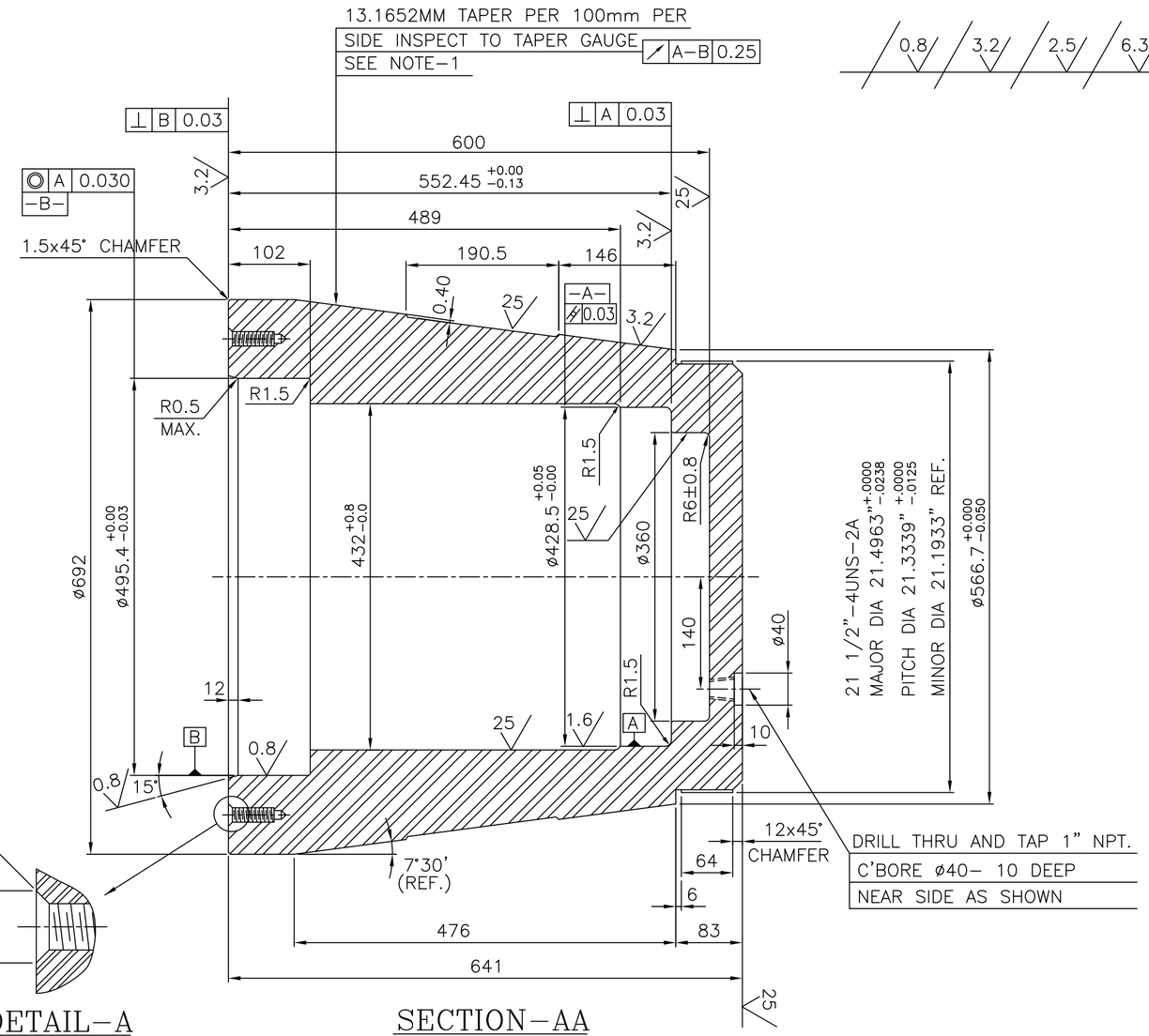

SECTION-AA

NOTES:-

1. TAPER MUST BE CHECKED WITH A RING GAUGE AND A MINIMUM OF 80% CONTACT SHALL BE OBTAINED. BANDS OF NO CONTACT MUST NOT EXCEED 10° OF ARC.
2. 100% INSPECTION OF ALL THREADS REQUIRED.
3. BREAK ALL SHARP EDGES & CORNERS UNLESS OTHERWISE NOTED.

ITEM NO.	DESCRIPTION	DRAWING NO.	VAR. NO.	RAW MATERIAL SIZE OR CASTING DRG. NO. OR FORGING DRG. NO.	MATERIAL CODE	NET WT.	GROSS WT.
01	FORGING			3-61-088-02392	BA9413221316	840.00	980.00
					AA19332	1	
					MATERIAL SPECN.	QUANTITY	

THE FOLLOWING CONDITIONS APPLY EXCEPT OTHERWISE STATED.

1. REF. TO HY0230261 FOR UNSPECIFIED TOLERANCES.
2. CHAMFER M/CD. SHARP EDGES 1.2 TO 1.0 AT 45°.
3. INTERNAL M/CD. CORNER RADII 1 TO 0.7
4. THE SURFACE ROUGHNESS WHERE-EVER NOT SHOWN SHALL BE TAKEN FROM THE SURFACE ROUGHNESS SHOWN OUT SIDE THE BACK SLASH GIVEN OR THE TOP MOST RIGHT CORNER OF THE DRG.

TYPE OF PRODUCT
NAME OF CUSTOMER/PROJECT

883 XRP BOWL MILL

BHARAT HEAVY ELECTRICALS LIMITED
HYDERABAD

	NAME	SIGN.	DATE	NO.OF VAR.
DRN.	UNIC		14.4.97	
CHD.	G.S.N.M.RAO		28.11.03	
APPD.				

DEPT. PULV ENGG. CODE 446	UNTOL. DIMS. GR. ¢/M/¢	SCALE 1:5 1:2	WEIGHT (KG) 840.00	REF. TO ASSY DRG. 1.61.088.01019	ITEM NO. 3	NO.OF ITEMS 28

TITLE: LOWER JOURNAL HOUSING

CARD CODE U 01

DRAWING NO. 2-61-088-02056 REV. 07

SHEET NO. 01 NO OF SHEETS 01

REV	DATE	ALT	PKP	APPD
07	28.10.14	CHD	CKP	V.KUMAR

ZONE D5: LIFTING HOLE M24X45 REMOVED.

REV	DATE	ALT	UC	APPD
06	03.12.06	CHD	AMAN	GK

ZONE A2: M30X3.5 WAS M30X2.

REV.	DATE	ALTERED UC	APPD.
05	03.12.05	CHD.AMAN	GK

ZONE D7: 1"NPT WAS 'SQ PIPE PLUG TO FLUSH 2 TURNS.... C'BORE ø40X10 ADDED. STEP TO ø152 DELETED. DIM 600 WAS 622.

REV.	DATE	ALTERED	APPD.
04	24.8.05	CHD.AMAN	GK

ZONE D1: M30X35 DEEP WAS M20X35 DEEP.

REV.	DATE	ALTERED	APPD.
03	28.11.03	CHD.G.S.N.M.RAO	

ZONE: DRAWING REDRAWN BY INCORPORATING THE ALL PREVIOUS REV.

(ALL DIMENSIONS ARE IN mm)

DRG. NO. 2-61-088-02058

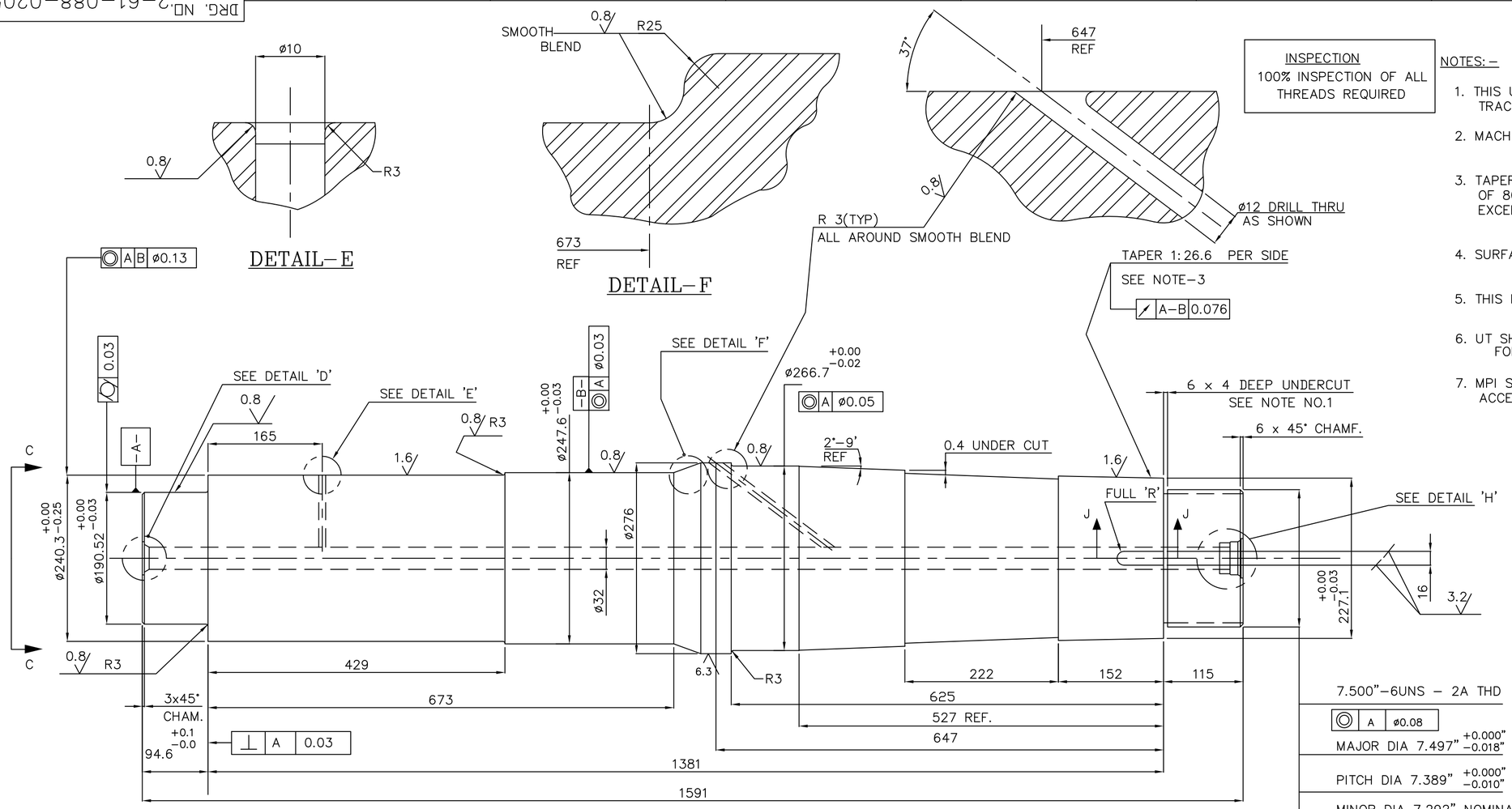

INSPECTION
100% INSPECTION OF ALL THREADS REQUIRED

NOTES:-

6.3 0.8 1.6 3.2

1. THIS UNDERCUT IS NOT REQUIRED WHEN MACHINING WITH TRACING EQUIPMENT.
2. MACHINE ALL SURFACES TO 6.3 UNLESS OTHERWISE NOTED.
3. TAPER MUST FIT FULL CONTACT RING GAUGE WITH MINIMUM OF 80% CONTACT BANDS OF NO CONTACT MUST NOT EXCEED 10° OF ARC.
4. SURFACE FINISHES SHOWN ARE MAXIMUM.
5. THIS IS FINISH MACHINED DRG.
6. UT SHALL BE AS PER AA0850118 CAT 3 FOR ROUGH FORGINGS.
7. MPI SHALL BE AS PER AA0820133 REFER -QP FOR ACCEPTANCE LEVEL.

VAR NO.	ITEM NO.	DESCRIPTION	STD.	DRAWING NO.	IT.NO / VAR.	MATL CODE / MATL SPECN	CIA	UNIT	UNIT WT. / QTY.	GS	ZONE
	01	FORGING		3.61.088.02391		BA9413253307			560 662.00		

REF.TO HY0230261 FOR UNSPECIFIED TOLERANCES

REV.	DATE	
05	2.7.98	ALTERED UNIC
		CHECKED G.S.N.M.RAO
		APPROVED
ZONE	DRG REDRAWN.ON AUTOCAD ø266.7 +0.00 -0.02 WAS ø266.7 +0.00 -0.05	

TYPE OF PRODUCT OR NAME OF CUSTOMER/PROJECT: 883XRP BOWL MILL

BHARAT HEAVY ELECTRICALS LTD. HYDERABAD

	NAME	SIGN.	DATE	NO.OF VAR.
DRN.	UNIC		2.7.98	
CHD.	G.S.N.M.RAO		28.11.03	
APPD.				

DEPT.	GRADE OF TOL.DIM.	SCALE	WEIGHT (KG)	REF. TO ASSY DRG.	ITEM NO.	NO.OF ITEMS
PULV-ENGG CODE 446	E/M/F	1:5	560KG	1.61.088.01019	01	28

TITLE: JOURNAL SHAFT

CARD CODE

DRAWING NO. 2-61-088-02058 REV. 05

SHEET NO. 01 NO OF SHEETS 01

THE INFORMATION ON THIS DOCUMENT IS THE PROPERTY OF BHARAT HEAVY ELECTRICALS LIMITED. IT MUST NOT BE USED DIRECTLY OR INDIRECTLY IN ANY WAY DETRIMENTAL TO THE INTERESTOF THE COMPANY

INVENTORY NO | SIGN. AND DATE | REF. DRG. NO. C-94-851 | REF. DRG. NO. 26102058.DWG

FIRST ANGLE PROJECTION

(ALL DIMENSIONS ARE IN mm)

DRG. NO. 2-61-088-02059 | SH. 01 OF 01

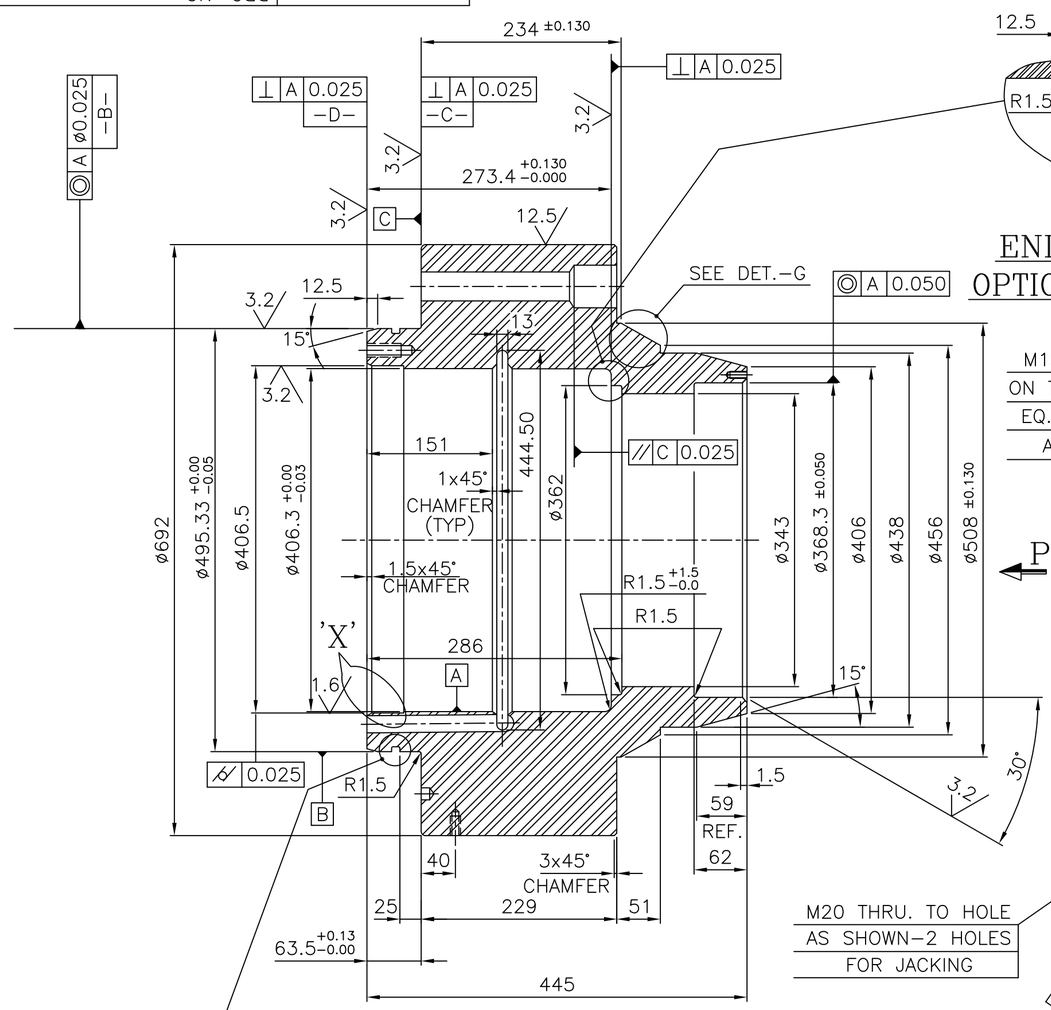

SECTION−FF

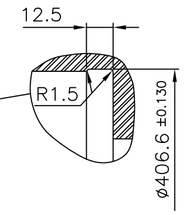

ENLARGED VIEW
OPTIONAL MACHINING
SCALE 1:2

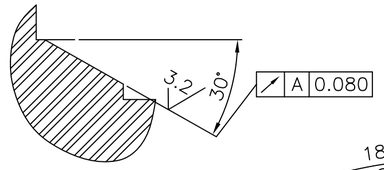

DETAIL−G

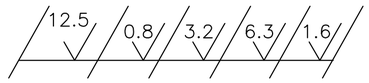

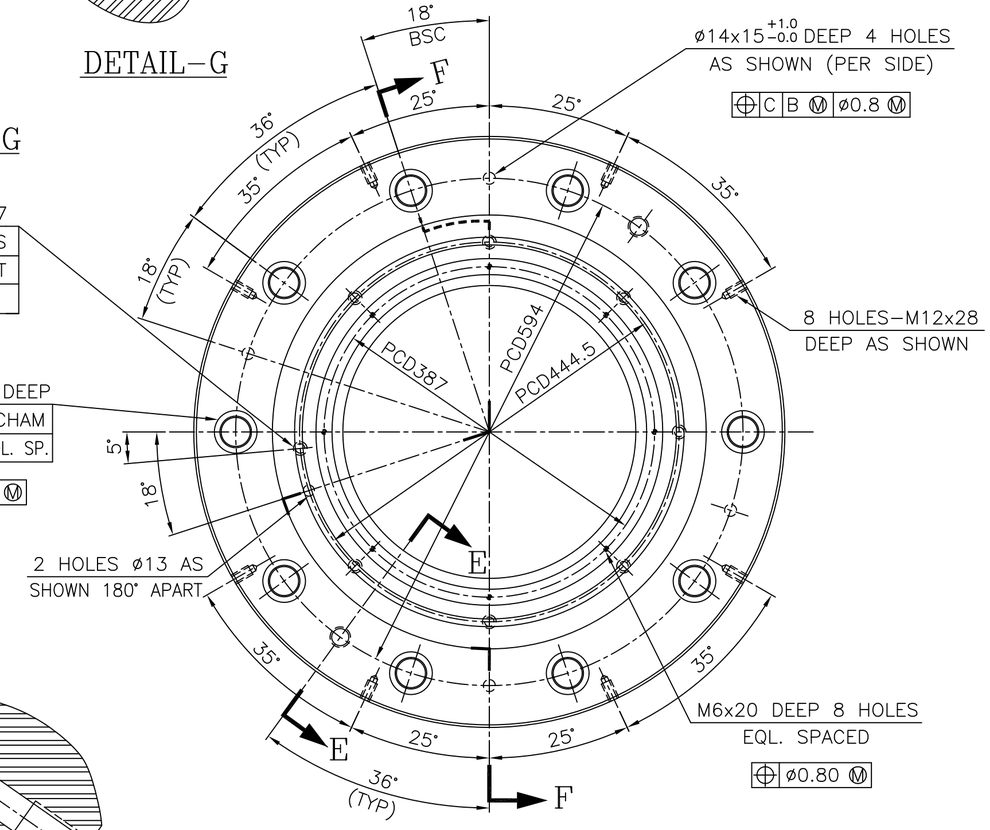

VIEW−P

M16x40 DEEP 8 HOLES−7 ON THE BASIS OF 8 HOLES EQ.L. SP. AND ONE OFSET AS SHOWN (FAR SIDE)
D A ø0.80

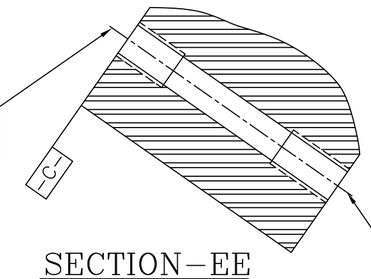

SECTION−EE
SCALE 1:2.5

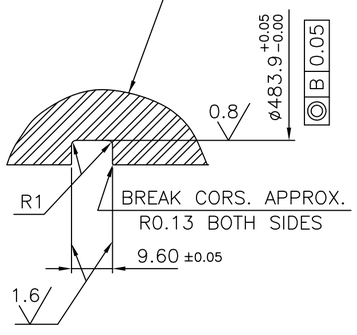

ENLARGED VIEW
SCALE 1:1

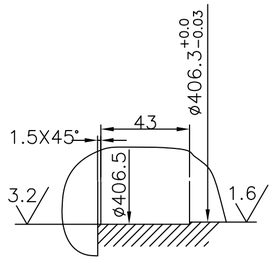

DETAIL−'X'
SCALE 1:2

NOTES:−

1. UNLESS OTHERWISE SPECIFIED: ALL MACHINED SURFACE TO BE 6.3
2. UNLESS OTHERWISE SPECIFIED: ALL COAXIAL FEATURES TO BE CONCENTRIC WITH DATUM 'A' WITHIN 0.250 DIA TIR.
3. BREAK ALL SHARP EDGES & CORNERS UNLESS OTHERWISE NOTED.

ITEM NO.	DESCRIPTION	DRAWING NO.	VAR. NO.	RAW MATERIAL SIZE OR CASTING DRG. NO. OR FORGING DRG. NO.	MATERIAL CODE / MATERIAL SPECN.	NET WT.	GROSS WT. / QUANTITY
01	FORGING			3−61−088−02393	BA9413221324 AA19332	540.00	653.00

THE FOLLOWING CONDITIONS APPLY EXCEPT OTHERWISE STATED.

1. REF. TO HY0230261 FOR UNSPECIFIED TOLERANCES.
2. CHAMFER M/CD. SHARP EDGES 1.2 TO 1.0 AT 45°.
3. INTERNAL M/CD. CORNER RADII 1 TO 0.7
4. THE SURFACE ROUGHNESS WHERE−EVER NOT SHOWN SHALL BE TAKEN FROM THE SURFACE ROUGHNESS SHOWN OUT SIDE THE BACK SLASH GIVEN OR THE TOP MOST RIGHT CORNER OF THE DRG.

TYPE OF PRODUCT
NAME OF CUSTOMER/PROJECT: 883 XRP BOWL MILL

BHARAT HEAVY ELECTRICALS LIMITED
HYDERABAD

	NAME	SIGN.	DATE	NO.OF VAR.
DRN.	UNIC		16.4.97	
CHD.	G.S.N.M.RAO		28.11.03	
APPD.				

DEPT.	UNTOL. DIMS. GR.		SCALE	WEIGHT (KG)	REF. TO ASSY DRG.	ITEM NO.	NO.OF ITEMS
PULV ENGG. CODE 446	¢/M/F		1:5 1:2&1:2.5	540.000	1.61.088.01019	3	28

TITLE: UPPER JOURNAL HOUSING

CARD CODE: U 01

DRAWING NO. 2−61−088−02059 | REV. 05

SHEET NO. 01 | NO OF SHEETS 01

REV.	DATE	ALTERED	APPD.
		CHD.	
ZONE			

REV.	DATE	ALTERED	APPD.
		CHD.	
ZONE			

REV.	DATE	ALTERED UC	APPD.
05	28.11.03	CHD. G.S.N.M.RAO	
ZONE			

DRAWING REDRAWN BY INCORPORATING THE ALL PREVIOUS REV.

THE INFORMATION ON THIS DOCUMENT IS THE PROPERTY OF BHARAT HEAVY ELECTRICALS LIMITED. IT MUST NOT BE USED DIRECTLY OR INDIRECTLY IN ANY WAY DETRIMENTAL TO THE INTEREST OF THE COMPANY

COMPUTER FILE NAME 26102059.DWG

REF. DRG. NO. (C−94−852/03)

GENERAL DIMENSIONAL LIMITS,FITS & TOLERANCES AS PER HY0230261

SIGN. AND DATE

INVENTORY NO

FIRST ANGLE PROJECTION

(ALL DIMENSIONS ARE IN mm)

DRG.NO. 3-61-000-90168

THE INFORMATION ON THIS DOCUMENT IS THE PROPERTY OF BHARAT HEAVY ELECTRICALS LTD.
IT MUST NOT BE USED DIRECTLY OR INDIRECTLY IN ANY WAY DETRIMENTAL TO THE INTEREST OF THE COMPANY.

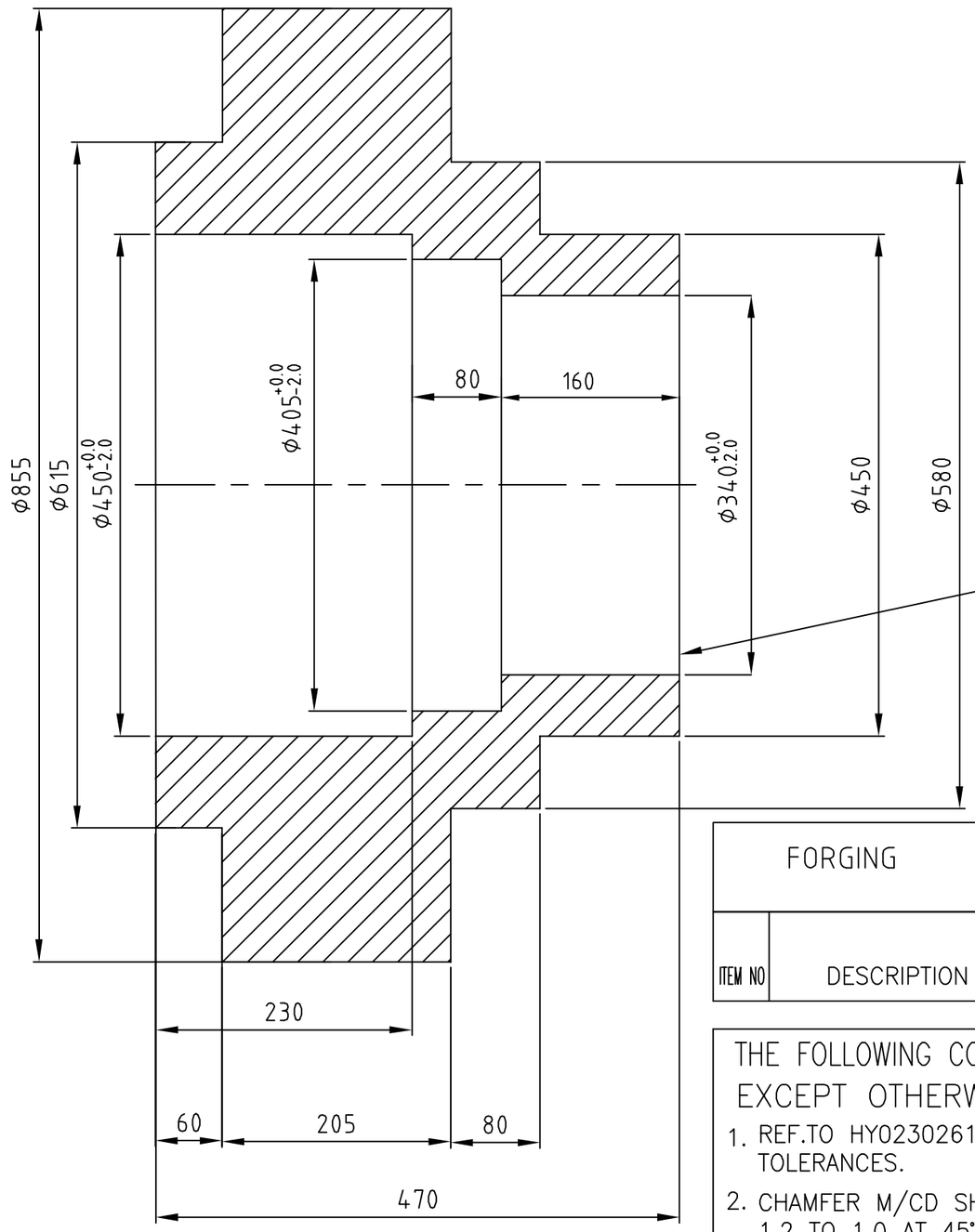

NOTE

1. FORGING TO BE ROUGH MACHINED TO DIMENSIONS INDICATED IN THE DRAWING
2. CHAMFER CORNERS TO R2 & FILLET RADIUS ARE TO BE R3
3. TEST ULTRASONICALLY AS PER SPECIFICATIONS AA0850118 CAT-3
4. FORGING SHOULD BE AS PER SPECIFICATIONS AA19332
5. TOLERENCE ON DIAMETERS AND LENGTHS±1MM
6. FOR FINISH MACHINING REFER 1-61-000-00365

12.5

LOCATE HEAR ATTESTATION DETAILS VIZ
SUPPLIERS CODE
FORGE NO
MAT SPECN
MELT NO

FORGING					BA9413221235		
					AA 19332		
ITEM NO	DESCRIPTION	DRAWING NO.	VAR. NO.	RAW MATERIAL SIZE OR CASTING DRG.NO. OR FORGING DRG.NO.	MATERIAL CODE	NET WT.	GROSS WT.
					MATERIAL SPECN.	QUANTITY	

THE FOLLOWING CONDITIONS APPLY EXCEPT OTHERWISE STATED...

1. REF.TO HY0230261 FOR UNSPECIFIED TOLERANCES.
2. CHAMFER M/CD SHARP EDGES 1.2 TO 1.0 AT 45°.
3. INTERNAL M/CD CORNER RADII 1 TO 0.7.
4. THE SURFACE ROUGHNESS WHEREVER NOT SHOWN SHALL BE TAKEN FROM THE SURFACE ROUGHNESS SHOWN OUT SIDE BACK SLASHES GIVEN AT THE TOP MOST RIGHT CORNER OF THE DRG.

TYPE OF PRODUCT OR NAME OF CUSTOMER/PROJECT: 1003 XRP BOWL MILL KORBA&RAMAGUNDAM 500MW

BHARAT HEAVY ELECTRICALS LTD. HYDERABAD

	NAME	SIGN.	DATE	NO.OF VAR.
DRN.	NARAYANA		3.11.03	
CHD.	N.D.S		3.11.03	
APPD.	S.GHADGE			

DEPT.	PULVE.ENGG	SCALE	WEIGHT (KG)	REF. TO ASSY DRG.	ITEM NO.	NO.OF ITEMS
CODE	446	1:5	854.00	1-61-000-90168		

TITLE: UPPER JOURNAL HOUSING

DRAWING NO. 3-61-000-90168 REV. 01

SHEET NO. 01 NO OF SHEETS 01

REV.	DATE	ALTERED		REV.	DATE	ALTERED NARAYANA	
		CHD.	APPD.	01	3.11.03	CHD.N.D.S	APPD.S.G
ZONE				ZONE	DRAWING DRAWN ON AUTOCAD		

FILE NAME

1-61-000-90168 REF.DRG.NO.

INVENTORY NO.

TD-151/REV. 03 SIZE A3

FIRST ANGLE PROJECTION

(ALL DIMENSIONS ARE IN mm)

DRG.NO. 3-61-000-90173

THE INFORMATION ON THIS DOCUMENT IS THE PROPERTY OF BHARAT HEAVY ELECTRICALS LTD.
IT MUST NOT BE USED DIRECTLY OR INDIRECTLY IN ANY WAY DETRIMENTAL TO THE INTEREST OF THE COMPANY.

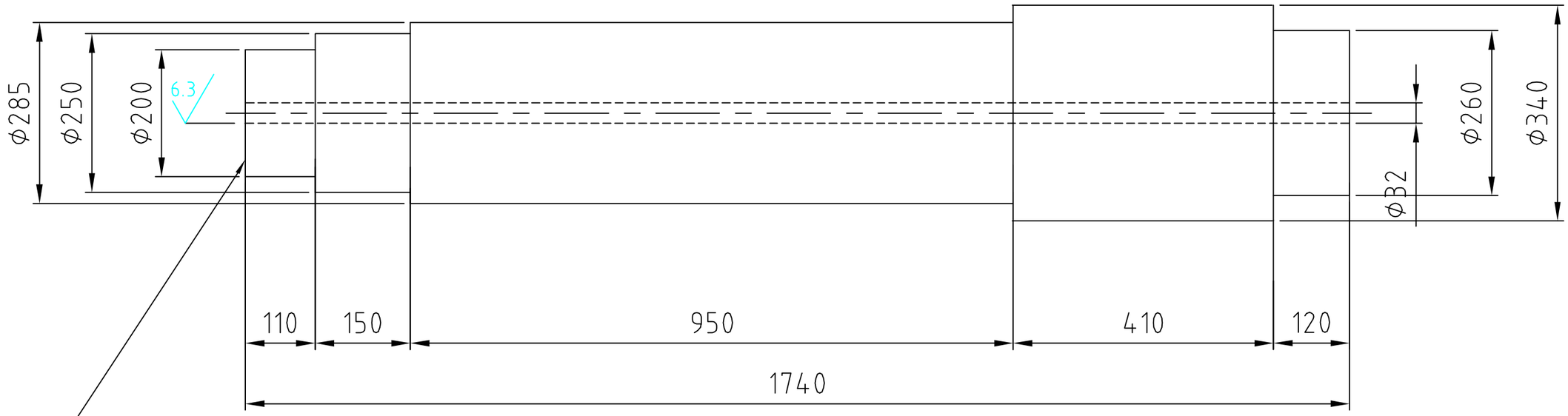

LOCATE HARE ATTESTATION DETAILS VIZ.
SUPPLIERS CODE
FORGE No.
MAT. SPECN.
MELT.No.

ITEM NO	DESCRIPTION	DRAWING NO.	VAR. NO.	RAW MATERIAL SIZE OR CASTING DRG.NO. OR FORGING DRG.NO.	MATERIAL CODE / MATERIAL SPECN.	NET WT.	GROSS WT.
	FORGING				BA9413253226 / AA19332	876.00	

QUANTITY

NOTE

1. FORGING TO BE MACHINED TO DIMENSIONS INDICATED IN THE DRAWING
2 CHAMFER SHARP CORNERS TO R2 & ALL FILLET RADIUS TO R3
3TEST ULTRASONICALLY AS PER SPECIFICATIONS
AA0850118 CAT-3
4.FORGING SHOULD BE AS PER SPECIFICATIONS AA19332
5. TOLERENCE ON DIAMETERS AND LENGTHS ± 1MM
6. HOLE Φ32 SHIULD BE CONCENTRIC WITH CENTRE LINE
WITH ± 1MM
7. FOR FINISH MACHININING REFER 1-61-000-00363

THE FOLLOWING CONDITIONS APPLY EXCEPT OTHERWISE STATED...

1. REF.TO HY0230261 FOR UNSPECIFIED TOLERANCES.
2. CHAMFER M/CD SHARP EDGES 1.2 TO 1.0 AT 45°.
3. INTERNAL M/CD CORNER RADII 1 TO 0.7.
4. THE SURFACE ROUGHNESS WHEREVER NOT SHOWN SHALL BE TAKEN FROM THE SURFACE ROUGHNESS SHOWN OUT SIDE BACK SLASHES GIVEN AT THE TOP MOST RIGHT CORNER OF THE DRG.

TYPE OF PRODUCT OR NAME OF CUSTOMER/PROJECT: 1003 XRP BOWL MILL — KORBA & RAMAGUNDAM 500 MW

BHARAT HEAVY ELECTRICALS LTD. HYDERABAD

	NAME	SIGN.	DATE
DRN.	NARAYANA		4.11.04
CHD.	N.D.S		4.11.03
APPD.	S.GHATGE		

NO.OF VAR.

DEPT.	PULVE.ENGG	SCALE	WEIGHT (KG)	REF. TO ASSY DRG.	ITEM NO.	NO.OF ITEMS
CODE	446	1:10	876.00	1-61-000-00363		

TITLE: JOURNAL SHAFT (ROUGH MACHINED)

DRAWING NO. 3-61-000-90173 REV. 01

SHEET NO. 01 NO OF SHEETS 01

REV.	DATE	ALTERED NARAYANA		REV.	DATE	ALTERED NARAYANA	
01	4.11.03	CHD. N.D.S	APPD. S.GADGA	01	4.11.03	CHD. N.D.S	APPD. S.GHATGE
ZONE	DRAWING DRAWN ON AUTOCAD			ZONE			

FILE NAME

1-61-000-00363 REF.DRG.NO.

INVENTORY NO.

TD-151/REV. 03 SIZE A3

FIRST ANGLE PROJECTION

(ALL DIMENSIONS ARE IN mm)

DRG.NO. 3-61-004-90184

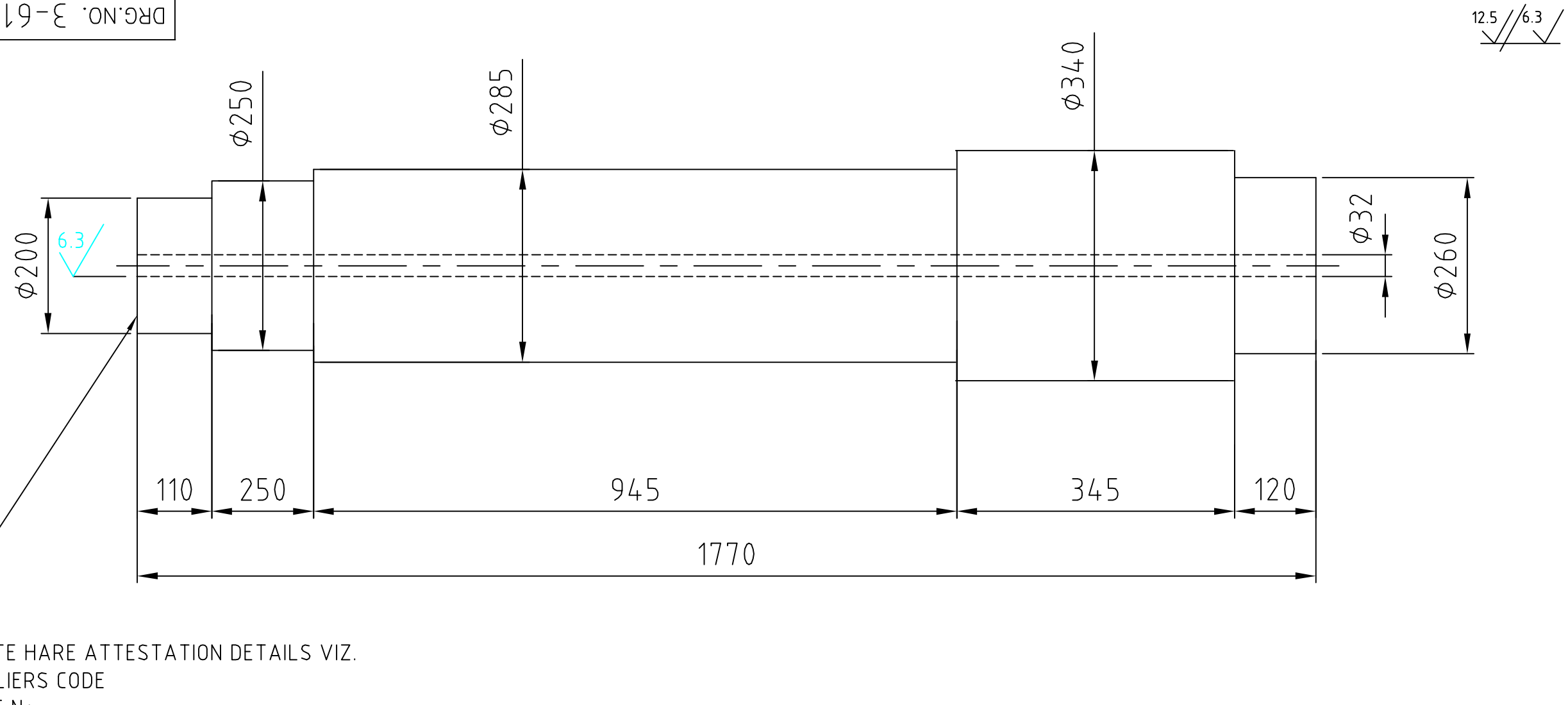

LOCATE HARE ATTESTATION DETAILS VIZ.
SUPPLIERS CODE
FORGE No.
MAT. SPECN.
MELT.No.

ITEM NO	DESCRIPTION	DRAWING NO.	VAR. NO.	RAW MATERIAL SIZE OR CASTING DRG.NO. OR FORGING DRG.NO.	MATERIAL CODE / MATERIAL SPECN.	NET WT.	GROSS WT.
01	FORGING				BA9413253242 / AA19332	890	

NOTE
1. FORGING TO BE MACHINED TO DIMENSIONS INDICATED IN THE DRAWING
2. CHAMFER SHARP CORNERS TO R2 & ALL FILLET RADIUS TO R3
3.TEST ULTRASONICALLY AS PER SPECIFICATIONS AA0850118 CAT-3
4. FORGING SHOULD BE AS PER SPECIFICATIONS AA19332
5. TOLERENCE ON DIAMETERS AND LENGTHS ± 1MM
6. HOLE ϕ32 SHIULD BE CONCENTRIC WITH CENTRE LINE WITH ± 1MM
7. FOR FINISH MACHININING REFER 1-61-004-01183

THE FOLLOWING CONDITIONS APPLY EXCEPT OTHERWISE STATED...
1. REF.TO HY0230261 FOR UNSPECIFIED TOLERANCES.
2. CHAMFER M/CD SHARP EDGES 1.2 TO 1.0 AT 45°.
3. INTERNAL M/CD CORNER RADII 1 TO 0.7.
4. THE SURFACE ROUGHNESS WHEREVER NOT SHOWN SHALL BE TAKEN FROM THE SURFACE ROUGHNESS SHOWN OUT SIDE BACK SLASHES GIVEN AT THE TOP MOST RIGHT CORNER OF THE DRG.

TYPE OF PRODUCT OR NAME OF CUSTOMER/PROJECT: 1043 XRP BOWL MILL CHANDRAPUR 500 MW

BHARAT HEAVY ELECTRICALS LTD. HYDERABAD

	NAME	SIGN.	DATE	NO.OF VAR.
DRN.	PKP		07.11.12	
CHD.	CKP		07.11.12	
APPD.	V KUMAR		07.11.12	

DEPT. PULVE.ENGG
CODE 446
SCALE NTS
WEIGHT (KG) 890.00
REF. TO ASSY DRG.
ITEM NO.
NO.OF ITEMS

TITLE: JOURNAL SHAFT (ROUGH MACHINED)

DRAWING NO. 3-61-004-90184
REV. 01
SHEET NO. 01
NO OF SHEETS 01

REV.	DATE	ALTERED	CHD.	APPD.
01	07.11.12	ALTERED PKP	CKP	V KUMAR

ZONE

DRAWING DRAWN ON AUTOCAD DIM. 120, 945, 250 WERE 105, 950 AND 260 RESPECTIVELY.

INVENTORY NO.
1-61-004-01183 REF.DRG.NO.
36190184.DWG FILE NAME

THE INFORMATION ON THIS DOCUMENT IS THE PROPERTY OF BHARAT HEAVY ELECTRICALS LTD. IT MUST NOT BE USED DIRECTLY OR INDIRECTLY IN ANY WAY DETRIMENTAL TO THE INTEREST OF THE COMPANY.

TD-151/REV. 03 SIZE A3

FIRST ANGLE PROJECTION

(ALL DIMENSIONS ARE IN mm)

DRG.NO. 3-61-088-02391

THE INFORMATION ON THIS DOCUMENT IS THE PROPERTY OF BHARAT HEAVY ELECTRICALS LTD.
IT MUST NOT BE USED DIRECTLY OR INDIRECTLY IN ANY WAY DETRIMENTAL TO THE INTEREST OF THE COMPANY.

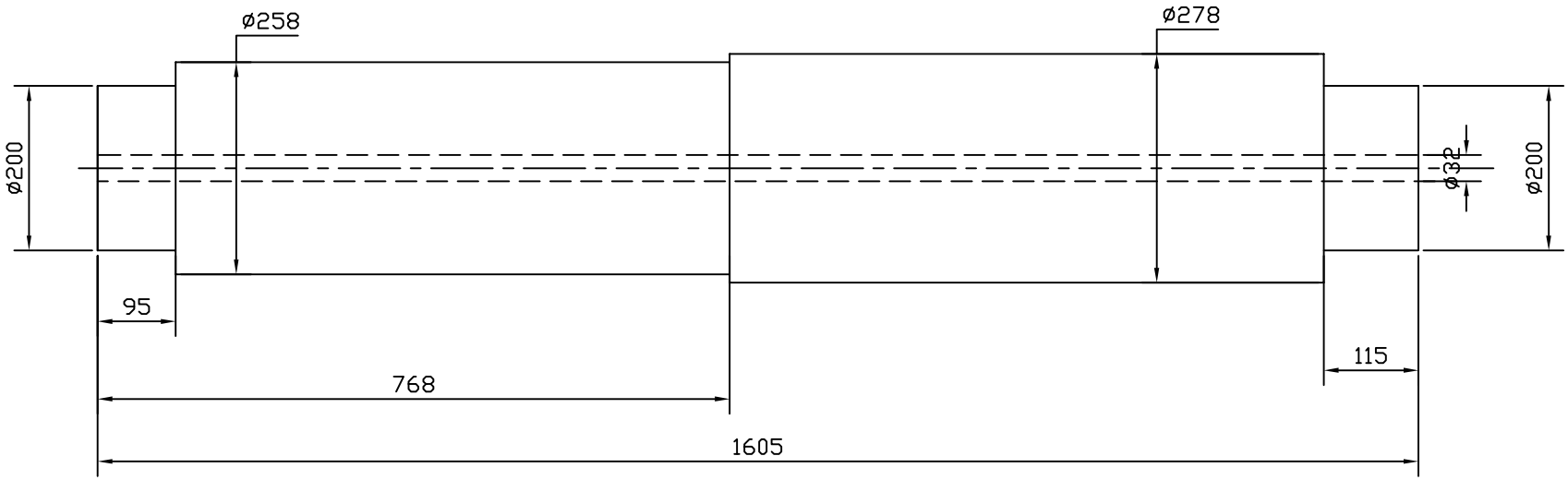

1. FORGING SHALL BE ROUGH MACHINED TO DIMENSIONS INDICATED IN THE DRAWING
2. BREAK ALL SHARP EDGES&ALLCORNER RADII TO BE R2
3. FORGING SHALL BELTESTED ULTRASONICALLY AS PER BHEL CORP.STDAA0850118 CAT-2
4. REFER DRG 2-61-088-02058 FOR FINISH MACHINING
5. HOLE ±32 SHOULD BE CONCENTRIC WITH RESPECT TO CENTRE LINE WITH IN 0.5MM

FILE NAME 02

REF.DRG.NO.

INVENTORY NO.

ITEM NO	DESCRIPTION	DRAWING NO.	VAR. NO.	RAW MATERIAL SIZE OR CASTING DRG.NO. OR FORGING DRG.NO.	MATERIAL CODE	NET WT.	GROSS WT.
	FORGING				AA19332,REV,10		
					MATERIAL SPECN.	QUANTITY	

THE FOLLOWING CONDITIONS APPLY EXCEPT OTHERWISE STATED...

1. REF.TO HY0230261 FOR UNSPECIFIED TOLERANCES.
2. CHAMFER M/CD SHARP EDGES 1.2 TO 1.0 AT 45°.
3. INTERNAL M/CD CORNER RADII 1 TO 0.7.
4. THE SURFACE ROUGHNESS WHEREVER NOT SHOWN SHALL BE TAKEN FROM THE SURFACE ROUGHNESS SHOWN OUT SIDE BACK SLASHES GIVEN AT THE TOP MOST RIGHT CORNER OF THE DRG.

TYPE OF PRODUCT OR NAME OF CUSTOMER/PROJECT: 883 XRP BOWL MILL

BHARAT HEAVY ELECTRICALS LTD. HYDERABAD

	NAME	SIGN.	DATE	NO.OF VAR.
DRN.	NARAYANA		15.11.03	
CHD.	N.D.S		15.11.03	
APPD.	S.GADGA			

DEPT.	PULVE.ENGG	SCALE	WEIGHT (KG)	REF. TO ASSY DRG.	ITEM NO.	NO.OF ITEMS
CODE	446	1:5	662	-		

TITLE: JOURNAL SHAFT (ROUGH MACHINED)

DRAWING NO. 3-61-088-02391 REV. 01

SHEET NO. 01 NO OF SHEETS 01

REV.	DATE	ALTERED		REV.	DATE	ALTERED	NARAYANA
		CHD.	APPD.	01	15.11.03	CHD. N.D.S	APPD. S.G
ZONE				ZONE	DRAWING DRAWN ON AUTOCAD		

TD-151/REV. 03 SIZE A3

FIRST ANGLE PROJECTION

(ALL DIMENSIONS ARE IN mm)

DRG.NO. 3-61-088-02392

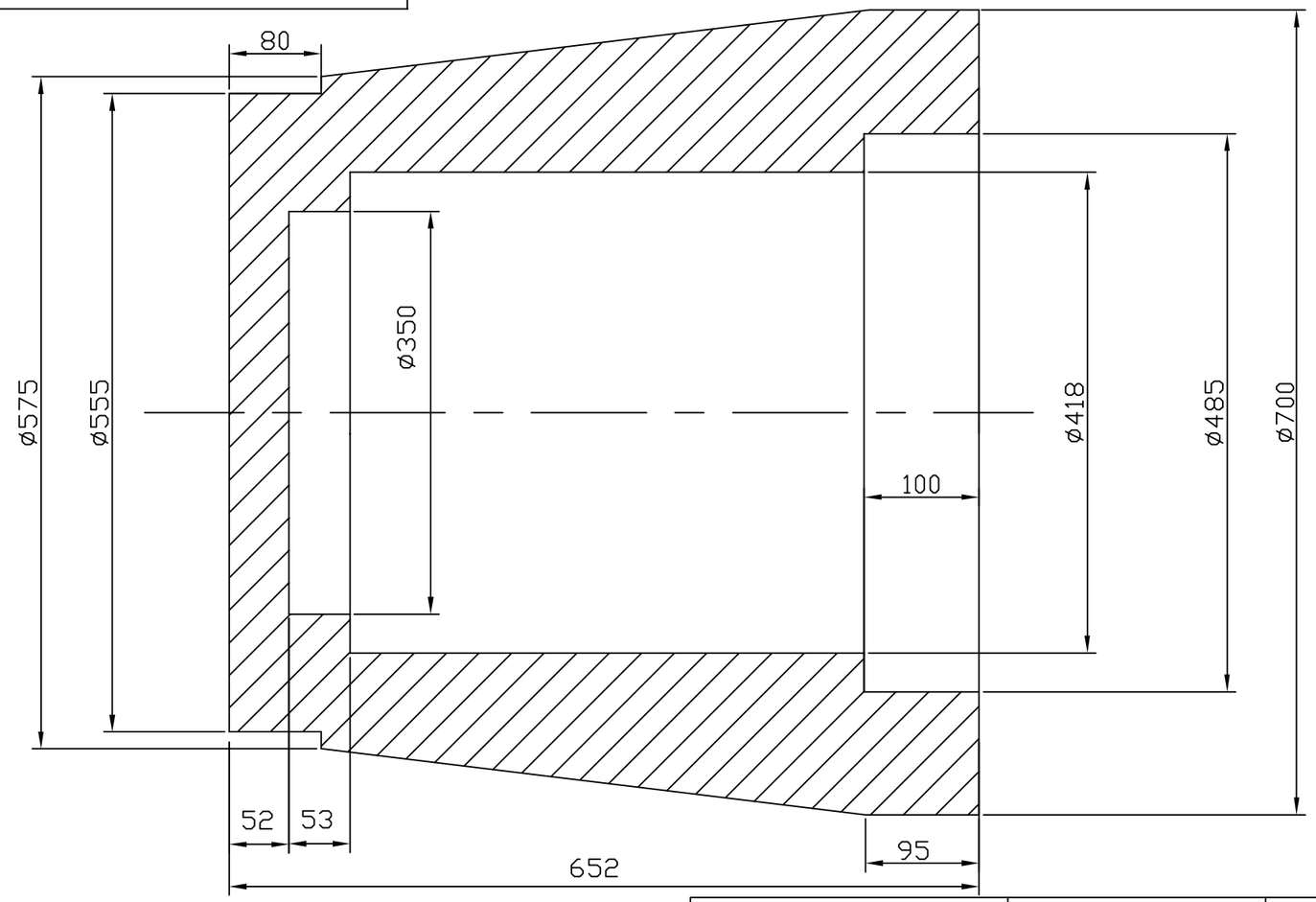

12.5

NOTE

1. FORGING TO BE ROUGH MACHINED TO DIMENSIONS INDICATED IN THE DRG
2. BREAK ALL SHARP EDGES &ALL CORNER RADII TO BE R2
3. TEST ULTRASONICALLY AS PER SPECIFICATIONS AA0850118 CAT-3
4. FOR FINISH MACHINING REFER 2-61-088-02056

ITEM NO	DESCRIPTION	DRAWING NO.	VAR. NO.	RAW MATERIAL SIZE OR CASTING DRG.NO. OR FORGING DRG.NO.	MATERIAL CODE	NET WT.	GROSS WT.
	FORGING				BA9413221316	990	
					AA 19332	1	
					MATERIAL SPECN.	QUANTITY	

THE FOLLOWING CONDITIONS APPLY EXCEPT OTHERWISE STATED...

1. REF.TO HY0230261 FOR UNSPECIFIED TOLERANCES.
2. CHAMFER M/CD SHARP EDGES 1.2 TO 1.0 AT 45°.
3. INTERNAL M/CD CORNER RADII 1 TO 0.7.
4. THE SURFACE ROUGHNESS WHEREVER NOT SHOWN SHALL BE TAKEN FROM THE SURFACE ROUGHNESS SHOWN OUT SIDE BACK SLASHES GIVEN AT THE TOP MOST RIGHT CORNER OF THE DRG.

TYPE OF PRODUCT OR NAME OF CUSTOMER/PROJECT: 883 XRP BOWL MILL

BHARAT HEAVY ELECTRICALS LTD. HYDERABAD

	NAME	SIGN.	DATE	NO.OF VAR.
DRN.	NARAYANA		17.11.03	
CHD.	N.D.S		17.11.03	
APPD.	S.GHATGE		17.11.03	

DEPT.	PULVE.ENGG	SCALE	WEIGHT (KG)	REF. TO ASSY DRG.	ITEM NO.	NO.OF ITEMS
CODE	446	1:5	990	26108802056	1	1

TITLE: LOWER JOURNAL HOUSING (ROUGH MACHINED)

DRAWING NO. 3-61-088-02392 REV. 03

SHEET NO. 01 NO OF SHEETS 01

REV.	DATE	ALTERED	CHD	APPD	ZONE
03	29.12.08	PKP	CKP	VKR.	STEP OFø 555, 80L ADDED
02	4.2.06	NARAYANA	N.D.S	S.G	DIM 52 WAS 35.
01	3.11.03	NARAYANA	N.D.S	S.G	DRAWING DRAWN ON AUTOCAD

FILE NAME: 36102392.DWG

REF.DRG.NO.

INVENTORY NO.

THE INFORMATION ON THIS DOCUMENT IS THE PROPERTY OF BHARAT HEAVY ELECTRICALS LTD. IT MUST NOT BE USED DIRECTLY OR INDIRECTLY IN ANY WAY DETRIMENTAL TO THE INTEREST OF THE COMPANY.

TD-151/REV. 03 SIZE A3

FIRST ANGLE PROJECTION

(ALL DIMENSIONS ARE IN mm)

DRG.NO. 3-61-088-02393

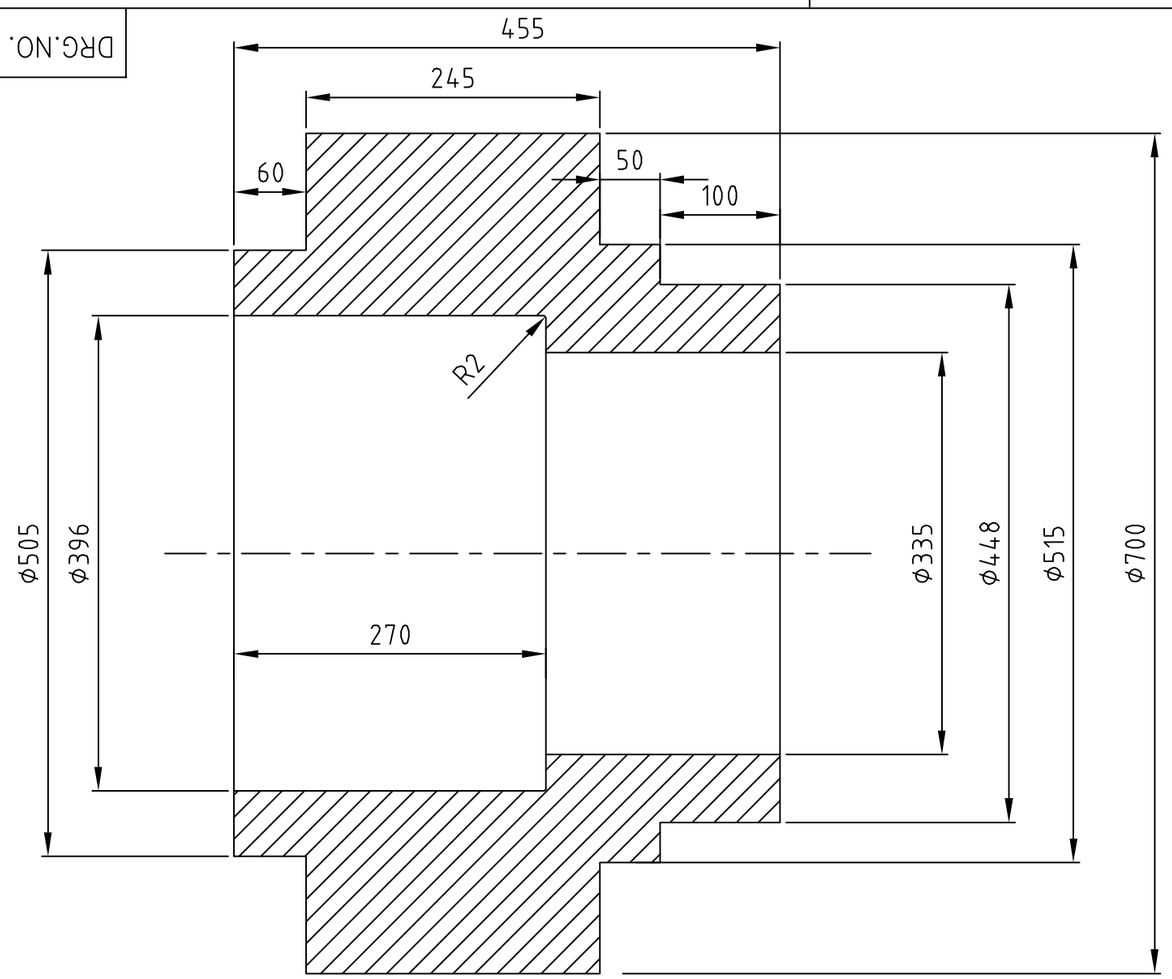

12.5

NOTE

1. FORGING TO BE ROUGH MACHINED TO DIMENSIONS INDICATED IN THE DRAWING
2. BREAK ALL SHARP EDGES & ALL CORNER RADII TO BE R2
3. TEST ULTRASONICALLY AS PER SPECIFICATIONS AA0850118 CAT-3
4. FOR FINISH MACHINING REFER 2-61-088-02059

ITEM NO	DESCRIPTION	DRAWING NO.	VAR. NO.	RAW MATERIAL SIZE OR CASTING DRG.NO. OR FORGING DRG.NO.	MATERIAL CODE / MATERIAL SPECN.	NET WT.	GROSS WT.
	FORGING				BA9413221324 / AA 19332	653.0	

THE FOLLOWING CONDITIONS APPLY EXCEPT OTHERWISE STATED...

1. REF.TO HY0230261 FOR UNSPECIFIED TOLERANCES.
2. CHAMFER M/CD SHARP EDGES 1.2 TO 1.0 AT 45°.
3. INTERNAL M/CD CORNER RADII 1 TO 0.7.
4. THE SURFACE ROUGHNESS WHEREVER NOT SHOWN SHALL BE TAKEN FROM THE SURFACE ROUGHNESS SHOWN OUT SIDE BACK SLASHES GIVEN AT THE TOP MOST RIGHT CORNER OF THE DRG.

TYPE OF PRODUCT OR NAME OF CUSTOMER/PROJECT: 883 XRP BOWL MILL

BHARAT HEAVY ELECTRICALS LTD. HYDERABAD

	NAME	SIGN.	DATE	NO.OF VAR.
DRN.	NARAYANA		17.11.03	
CHD.	N.D.S		17.11.03	
APPD.	S.GHATGE		17.11.03	

DEPT.	CODE	SCALE	WEIGHT (KG)	REF. TO ASSY DRG.	ITEM NO.	NO.OF ITEMS
PULVE.ENGG	446	1:5	653	2.61.088.02059	1	1

TITLE: UPPER JOURNAL HOUSING (ROUGH MACHINED)

DRAWING NO. 3-61-088-02393 REV. 01

SHEET NO. 01 NO OF SHEETS 01

REV.	DATE	ALTERED	CHD.	APPD.	REV.	DATE	ALTERED	CHD.N.D.S	APPD.S.G
					01	3.11.03	NARAYANA		

ZONE | ZONE | DRAWING DRAWN ON AUTOCAD

INVENTORY NO. | REF.DRG.NO. | FILE NAME 36102393.DWG

THE INFORMATION ON THIS DOCUMENT IS THE PROPERTY OF BHARAT HEAVY ELECTRICALS LTD. IT MUST NOT BE USED DIRECTLY OR INDIRECTLY IN ANY WAY DETRIMENTAL TO THE INTEREST OF THE COMPANY.

TD-151/REV. 03 SIZE A3

FIRST ANGLE PROJECTION

(ALL DIMENSIONS ARE IN mm)

DRG.NO. 3-61-376-90010

THE INFORMATION ON THIS DOCUMENT IS THE PROPERTY OF BHARAT HEAVY ELECTRICALS LTD.
IT MUST NOT BE USED DIRECTLY OR INDIRECTLY IN ANY WAY DETRIMENTAL TO THE INTEREST OF THE COMPANY.

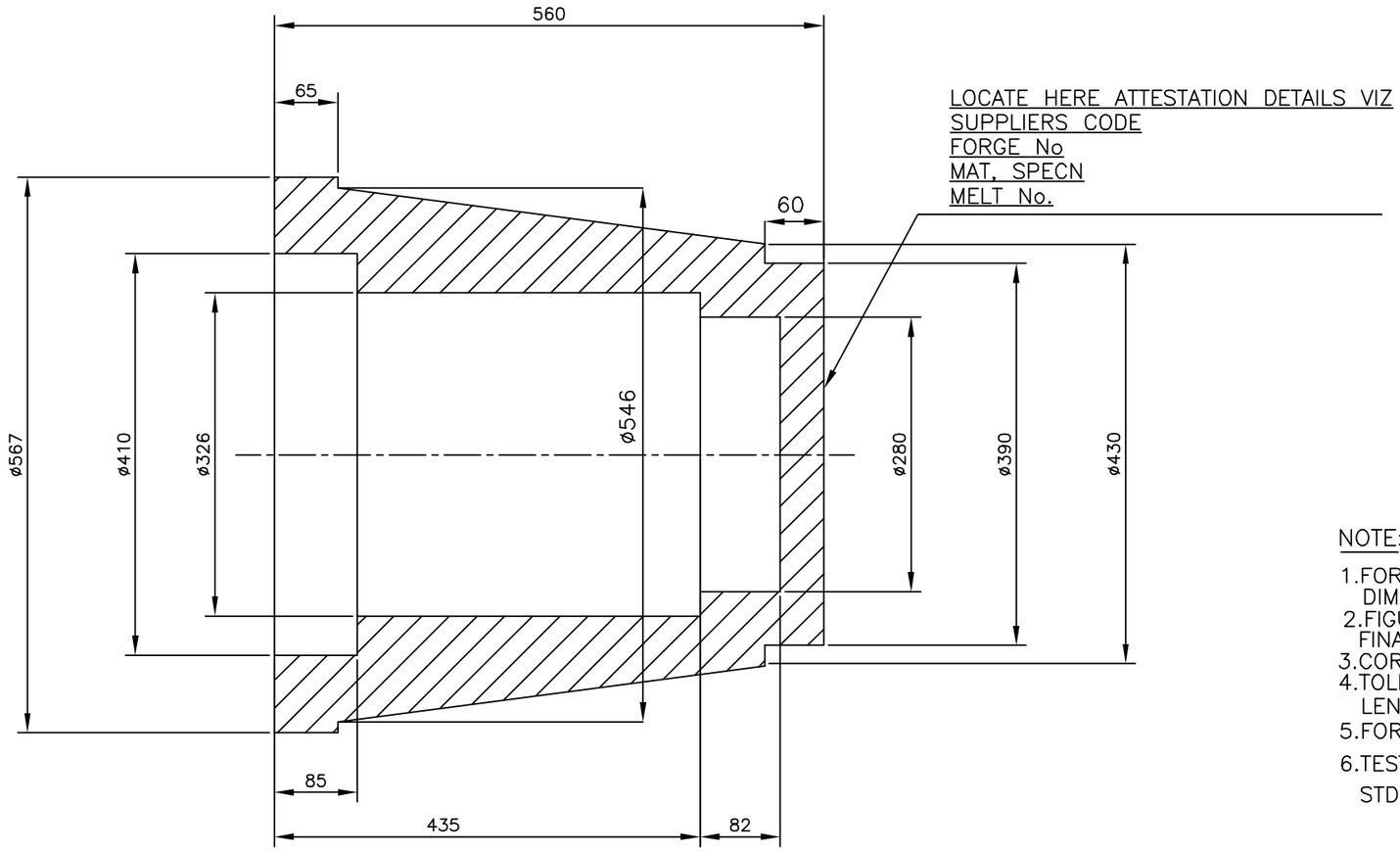

12.5

NOTE:—

1. FORGING TO BE ROUGH MACHINED TO DIMERNSIONS INDICATED IN DRG
2. FIGURE IN DASHED LINE REPRESENTS SHAPE OF FINAL MACHINED COMPONENT
3. CORNER CHAMFERS –R2;FILLET RADIUS–R3.
4. TOLERENCE ON DIAMETERS AND LENGTH ±1MM
5. FORGING SHOULD BE AS PER CPS–AA19332
6. TEST ULTRASONICALLY AS PER CORP ORATION STD AA–085–01–18–CAT–3

ITEM NO	DESCRIPTION	DRAWING NO.	VAR. NO.	RAW MATERIAL SIZE OR CASTING DRG.NO. OR FORGING DRG.NO.	MATERIAL CODE / MATERIAL SPECN.	NET WT.	GROSS WT.
	FORGING				BA9413221022 / AA 19332		
					QUANTITY		

THE FOLLOWING CONDITIONS APPLY EXCEPT OTHERWISE STATED...

1. REF.TO HY0230261 FOR UNSPECIFIED TOLERANCES.
2. CHAMFER M/CD SHARP EDGES 1.2 TO 1.0 AT 45°.
3. INTERNAL M/CD CORNER RADII 1 TO 0.7.
4. THE SURFACE ROUGHNESS WHEREVER NOT SHOWN SHALL BE TAKEN FROM THE SURFACE ROUGHNESS SHOWN OUT SIDE BACK SLASHES GIVEN AT THE TOP MOST RIGHT CORNER OF THE DRG.

REV.	DATE	ALTERED		
08	07.10.09	CHD. CKP	APPD. V.KR.	
ZONE	ø280 STEP LENGTH WAS 65 ø326 WAS ø330 WEIGHT CORRECTED.			
07	22.10.08	CHD. CKP	APPD. V.KR.	
ZONE	ø 546 STEP ADDED			

REV.	DATE	ALTERED NARAYANA	
06	14.11.03	CHD. N.D.S	APPD. S.G
ZONE	DRAWING DRAWN ON AUTOCAD		

FILE NAME: 40-F-002-016

REF.DRG.NO.

INVENTORY NO.

TYPE OF PRODUCT OR NAME OF CUSTOMER/PROJECT: MATERIAL ATTEST 76"BOWL MILL

BHARAT HEAVY ELECTRICALS LTD. HYDERABAD

	NAME	SIGN.	DATE	NO.OF VAR.
DRN.	NARAYANA		14.11.03	
CHD.	N.D.S		14.11.03	
APPD.	S.GHATGE			

DEPT.	PULVE.ENGG	SCALE	WEIGHT (KG)	REF. TO ASSY DRG.	ITEM NO.	NO.OF ITEMS
CODE	446	N.T.S	480	40-F-002-016		

TITLE: LOWERJOURNAL HOUSING

DRAWING NO. 3-61-376-90010 REV. 08

SHEET NO. 01 NO OF SHEETS 01

TD-151/REV. 03 SIZE A3

FIRST ANGLE PROJECTION

(ALL DIMENSIONS ARE IN mm)

DRG.NO. 3-61-376-90011

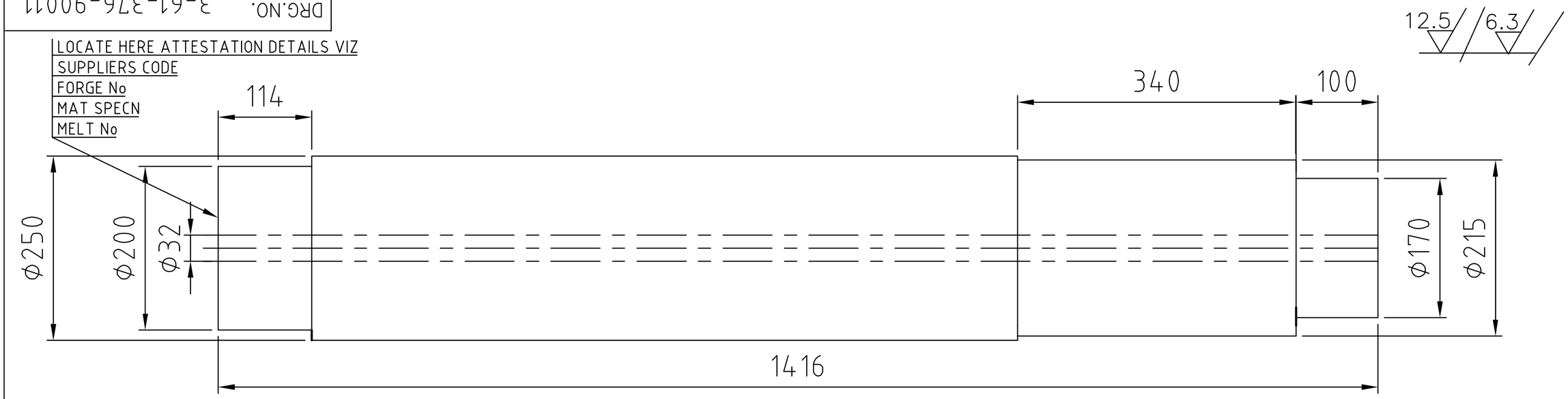

NOTE

1. FORGING TO BE ROUGH MACHINED TO DIMENSIONS INDICATED IN THE DRAWING.
2. CHAMFER SHARP CORNERS TO R2 & ALL FILLET RADIUS TO R3.
3. TEST ULTRASONICALLY AS PER SPECIFICATION AA0850118 CAT-2.
4. FORGING SHOULD BE AS PER SPECIFICATION AA19332
5. TOLERENCE ON DIAMETERS AND LENGTHS ± 1 mm.
6. HOLE ϕ32 SHOULD BE CONCENTRIC WITH CENTER LINE WITHIN ± 1mm.

ITEM NO	DESCRIPTION	DRAWING NO.	VAR. NO.	RAW MATERIAL SIZE OR CASTING DRG.NO. OR FORGING DRG.NO.	MATERIAL CODE / MATERIAL SPECN.	NET WT.	GROSS WT.
	FORGING				BA9413253048 / AA19332	463	

THE FOLLOWING CONDITIONS APPLY EXCEPT OTHERWISE STATED...

1. REF.TO HY0230261 FOR UNSPECIFIED TOLERANCES.
2. CHAMFER M/CD SHARP EDGES 1.2 TO 1.0 AT 45°.
3. INTERNAL M/CD CORNER RADII 1 TO 0.7.
4. THE SURFACE ROUGHNESS WHEREVER NOT SHOWN SHALL BE TAKEN FROM THE SURFACE ROUGHNESS SHOWN OUT SIDE BACK SLASHES GIVEN AT THE TOP MOST RIGHT CORNER OF THE DRG.

TYPE OF PRODUCT OR NAME OF CUSTOMER/PROJECT: 76"BOWL MILL 'MATERIAL ATTEST'

BHARAT HEAVY ELECTRICALS LTD. HYDERABAD

	NAME	SIGN.	DATE	NO.OF VAR.
DRN.	NARAYANA		17.11.03	
CHD.	N.D.S		17.11.03	
APPD.	S.GHATGE		17.11.03	

DEPT.	PULVE.ENGG	SCALE	WEIGHT (KG)	REF. TO ASSY DRG.	ITEM NO.	NO.OF ITEMS
CODE	446	NTS	463	–		

TITLE: JOURNAL SHAFT (ROUGH MACHINED)

DRAWING NO. 3-61-376-90011 REV. 03

SHEET NO. 01 NO OF SHEETS 01

REV.	DATE	ALTERED	CHD.	APPD.	REV.	DATE	ALTERED NARAYANA	CHD. N.D.S	APPD. S.G
					03	17.11.03			

ZONE | ZONE

DRAWING DRAWN ON AUTOCAD

THE INFORMATION ON THIS DOCUMENT IS THE PROPERTY OF BHARAT HEAVY ELECTRICALS LTD. IT MUST NOT BE USED DIRECTLY OR INDIRECTLY IN ANY WAY DETRIMENTAL TO THE INTEREST OF THE COMPANY.

FILE NAME

REF.DRG.NO.

INVENTORY NO.

TD-151/REV. 03 SIZE A3

FIRST ANGLE PROJECTION (ALL DIMENSIONS ARE IN mm)

REV.	DATE	ALTERED / CHECKED	REV.	DATE	ALTERED / CHECKED	REV.	DATE	ALTERED / CHECKED
ZONE			ZONE			ZONE		

THE INFORMATION ON THIS DOCUMENT IS THE PROPERTY OF BHARAT HEAVY ELECTRICALS LIMITED.
IT MUST NOT BE USED DIRECTLY OR INDIRECTLY IN ANY WAY DETRIMENTAL TO THE INTEREST OF THE COMPANY.

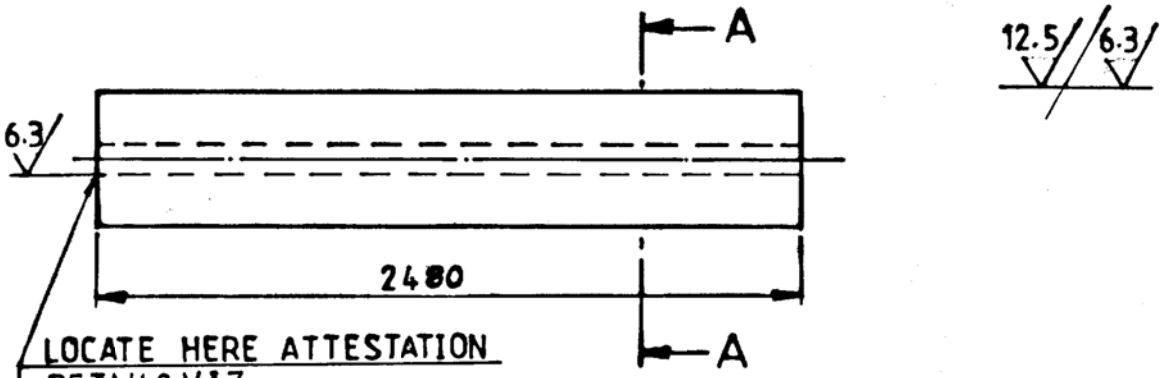

LOCATE HERE ATTESTATION DETAILS VIZ,
SUPPLIERS CODE.
FORGE. NO.
MAT. SPECN
MELT. NO.

NOTE

1. FORGING TO BE ROUGH MACHINED TO DIMENSIONS INDICATED IN DRG.
2. HOLE Ø64 SHOULD CONCENTRIC WITH CENTRE LINE WITH IN ±1MM
3. TEST ULTRASONICALLY AS PER SPCN. AA0850118 CAT-3.
4. TOLERANCE ON DIAMETERS AND LENGTH ±1MM.
5. FOR FINISH MACHINING REFER DRG. NO. 1-61-004-01184

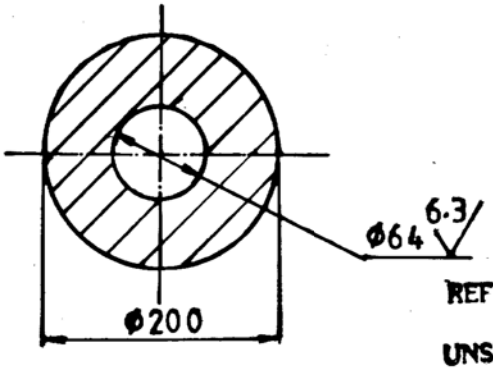

REFER PLANT STANDARD HY 0230261 FOR UNSPECIFIED TOLERANCES

SCANNED

SECTION AA

1003×RP BOWL MILL

REF. DRG. NO.					
	FORGING	BA9413253250 / AA 19332		548·0 / 1	
REMARKS (65–75)	ITEM NO. (25–27)	DESCRIPTION (29–58)	STD. (59)	MATL. CODE (34–45) / MATL. SPCN. (46–54)	A/C (55) / UNIT (56–57) / UNIT WT. (58–65) / QTY. (66–71)
CARD TYPE-3 → 28		28 → CARD TYPE-2		28 → CARD TYPE-1	

SIGN. & DATE

BHARAT HEAVY ELECTRICALS LTD HYDERABAD		NAME	SIGN.	DATE	73–74 NO. OF VAR.
	DRN.	D.C.		25-2-93	
	CHD.	N.D.S		31-3-93	
	APPD.	Y.S.L.RAO		3-4-93	

INVENTORY NO.

DEPT.	GRADE OF TOL. DIM.		SCALE	WEIGHT (Kg)	REF. TO ASSY. DRG.	ITEM NO.	75–77 NO. OF ITEMS
BMD / CODE 446	±/M/F		NTS	548·0	D-110-00767		

TITLE	1–3 CARD CODE	7–22 DRAWING NO.	23–24 REV.
TRUNNION SHAFT (ROUGH FORGING)		4-61-004-90249	00
		SHEET NO. / NO. OF SHEETS	

CARBON STEEL FORGINGS, CLASS-3 Î

1.0 GENERAL:

This specification governs the quality requirements of Carbon Steel Forgings, class 3. Î

2.0 APPLICATION:

Suitable for general engineering purposes.

3.0 CONDITION OF DELIVERY:

Normalised/Normalised and tempered.

Rough machining of the forgings shall be carried out, unless otherwise specified in the BHEL order/drawing.

4.0 COMPLIANCE WITH NATIONAL STANDARDS:

The forgings shall comply, in general with the requirement of the following National standards and also meet the requirements of this specification.

IS::2004: 1991 (RA-2006) } Carbon Steel Forgings For General Engineering

Gr: 3 (30C8), } Purposes. Î

5.0 DIMENSIONS AND TOLERANCES:

The dimensions and tolerances shall be as specified in the order/ drawing. Wherever these are not specified, specified, the machining allowances and tolerances shall be as specified below:

For finish machined drawings : 3 ± 1 mm

For rough machined drawings : ± 1 mm

COPYRIGHT AND CONFIDENTIAL
The Information on this document is the property of BHARAT HEAVY ELECTRICALS LIMITED
It must not be used directly or Indirectly in any way detrimental to the Interest of the company.

6.0 **MANUFACTURE:**

Forgings shall be manufactured from steel produced by the open hearth, electric or such other Î process as may be agreed to between BHEL and the manufacturer.

Steel shall be fully killed.

Sufficient discard shall be made from each ingot to ensure freedom from pipe, segregation and other defects.

The amount of hot working and finishing temperature shall be such as to ensure complete soundness and adequate uniformity of structure and mechanical properties after heat treatment. The forgings shall not be overheated.

The minimum reduction ratio when forgings are made out of ingots shall be 4:1.

For sizes above 250 mm ruling section, the minimum reduction ratio shall be 3.5:1

Note: Raw material like Ingots/Blooms/Billets required for forgings should be procured from BHEL approved sources along with test certificate."

7.0 HEAT TREATMENT:

Forgings shall be normalised / normalised and tempered at suitable temperature to achieve Î the mechanical properties specified.

Test pieces shall also be heat treated along with the forgings they represent.

8.0 FINISH:

As mentioned in the drawing.

9.0 FREEDOM FROM DEFECTS:

The forging shall be free from defects, such as cracks, fold, flakes, seams, segregation, nonmetallic inclusions and other defects which may affect the utility of the forging.

10.0 CHEMICAL COMPOSITION:

The melt analysis of steel and permissible variation in the composition of the forgings form the melt analysis shall be as follows:

Element	Melt analysis, percent		Permissible variation, percent
	Min.	Max.	
Carbon	0.25	0.35	± 0.03
Silicon	0.15	0.35	± 0.03
Manganese	0.60	0.90	± 0.04
Sulphur	---	0.040	+ 0.005
Phosphorus	---	0.040	+ 0.005

Notes:

1. Elements not quoted above shall not be added to the steel, other than for the purpose of finishing the heat and shall not exceed the following limits:

Element	Percent, max.
Nickel	0.30
Chromium	0.30
Copper	0.25
Molybdenum	0.15
Vanadium	0.05
Tin	0.05
Boron	0.0003

2. When steel is aluminium killed or killed with both aluminium and silicon, the requirements of minimum silicon content shall not apply. For aluminium killed steel the total aluminium content shall be with in 0.02 to 0.05 percent.

3. Mo ≤ 0.15%, limiting to meeting conditions of Cr + Mo + Ni = 0.5%.

11.0 TEST SAMPLES:

11.1 Unless otherwise specified in the order/drawing, test samples shall be taken form each melt and each heat treatment batch. Test samples should be cut from the heat treated forgings by cold process only and shall no further heat treatment.

Test samples shall be taken form locations indicted on the drawing, leaving enough material, if required for testing at BHEL's end, integral with forgings.

The samples shall be cylindrical or rectangular in shape and cut at a distance of 12.5mm below the heat treated surface.

11.2 When integral test pieces are not called for, a test sample, having similar reduction ratio and heat treatment, as the forgings it represents, shall be provided per heat, per heat treatment batch, for check testing at BHEL, along with the forgings. The samples shall be properly identified and correlated with the Heat/Heat treatment Batch No./ Test Certificate No. Test samples shall be taken, at a distance of 12.5mm below the heat-treated surface.

11.3 Test samples shall generally be taken in the longitudinal direction. However, for economic reasons or where the size/ configuration does not permit the same, test samples may be taken in the transverse or radial direction.

12.0 MECHANICAL PROPERTIES:

The test pieces, after being heat treated as per clause 7.0 above, shall show the following properties upto a limiting ruling section of 800 mm. Properties for thicker sections shall be subject to agreement between BHEL and the mainufacturer. Test methods are specified below:

12.1 Tensile test : IS:1608

12.2 Hardness test (Brinell) : IS:1500

12.3 Charpy Impact Value (2mm U-Notch) : IS:1499

This test applicable for forgings of sizes above 16mm only.

Property	Sample (See Cl.11.3)	Limiting ruiing section, mm			
		Upto & incl 100	>100 & upto 300	> 300 & upto 500	>500 & upto 800
Tensile strength N/mm^2	Longitudinal/ Transverse/ Radial/Tangential	490	470	450	450
		490	470	450	450
Yield strength min, N/mm^2	Longitudinal/ Transverse/ Radial/Tangential	270	245	230	220
Elongation on 5.65 √So gauge length percent, min	Longitudinal	21	19	18	17
	Transverse	10	9	8	7
	Radial	14	12	11	10
	Tangential	16	14	13	12
Reduction in area, percent min.	Longitudinal	42	40	35	32
	Transverse	25	24	22	20
	Radial	27	26	24	22
	Tangential	34	32	32	30
*Hardness, Brinell,HB	—	140-192	140-192	135-190	135-190
Charpy Impact Value (2mm, U-Notch) min.,Joules	Longitudinal	35	31	27	23
	Transverse	18	16	14	12
	Radial	21	19	17	15
	Tangential	26	23	20	17

Note: 1. Unless otherwise stated on the order/drawing, small forgings of non-critical nature weighing less than 300kg shall be accepted on the basis of chemical composition and hardness.

* 2. Hardness test can be conducted only, when tensile test can not be performed.

13.0 ULTRASONIC TESTS: Î

13.1 For forgings ordered by BHEL, Hyderabad: Unless other wise specified on the drawing, ultrasonic test shall be carried out as per BHEL standard AA 085 01 18 and norms of acceptance shall be as per category 2.

3.13.2 For forgings ordered by other units: If specified on the drawing/order, ultrasonic test shall be carried out as per BHEL standard AA 085 01 18 and norms of acceptance shall be as per category 2, unless otherwise specified.

14.0 ADDITIONAL TESTS:

If specified in the drawing/order, the following tests shall be conducted:

14.1 Bend Test (Longitudinal):

The test pieces (230mm long and 32 mm square with edges rounded off, where the dimensions permit) shall be capable of being bent cold by direct pressure without fracture, until the sides are parallel, round a mandrel having a diameter of 44 mm when tested as per IS:1599.

14.2 Magnetic particle test.

14.3 Any other tests: Norms of acceptance shall be as specified in the drawing/order.

15.0 SCOPE OF THIRD PARTY INSPECTION:

Wherever, separate quality plan is not attached, the scope of third party inspection shall be as follows:

1. Review of supplier's declared chemical composition.
2. Selection of test samples for mechanical tests and witness of mechanical tests.
3. Witness of Non-destructive tests as applicable.
4. Review of HT charts.
5. Dimensional inspection.

16.0 TEST CERTIFICATE:

Three copies of test certificates shall be supplied unless otherwise stated in the order, preferably in the test certificate format annexed to this specification (Annexure 1).

In addition, the supplier shall ensure to enclose one copy of the test certificate along with their dispatch documents to facilitate quick clearance of the material.

The following details shall be furnished in the test certificate:

i) Reduction ratio

ii) Dimensional Inspection.

iii) Chemical composition including trace elements.

iv) Results of mechanical tests.

v) Results of Ultrasonic test

vi) Details of heat treatment

vii) Results of additional tests called for in the drawing/order.

17.0 PACKING & MARKING:

Forgings shall be suitably packed to prevent corrosion and damage during transit.

Machined surfaces shall be properly protected with anticorrosive compounds.

Each package or forging (when supplied separately) shall be legibly marked with the following information:

AA 193 32 : Carbon Steel Forgings, Class 3 Î

BHEL Order No.

Suppliers Name

Consignment/ Identification No.

Batch No.

Weight.

18.0 REFERRED STANDARDS (Latest publications Including Amendments):

1) AA 085 01 18 2) IS:1499 3) IS:1500 4) IS:1599
5) IS: 1608 6) 2004

ANNEXURE-I: RECOMMENDED TEST CERTIFICATE FORMAT FOR FORGINGS

SUPPLIER'S NAME AND ADDRESS

TEST CERTIFICATE FOR FORGINGS

1. Customer:
2. TC No. & Date:
3. PO No.:
4. Process of Melting Ingot:
5. Deoxidisation Process:
6. Forging Method:
7. BHEL's Reference for Approval of Bloom
8. Discard: Top_____%; Bottom_____%
9. Reduction Ratio } Ingot to Bloom / Bloom to Blank
10. Batch No.:
11. Heat/Melt No.
12. Spec.No.
13. Test Bar Size & Nos.
14. Supplier of the ingot/billet/ Bloom and TC reference.

15. FORGINGS COVERED BY TEST CERTIFICATE

S.No.	Drawing No. & Item No.	Description	Quantity & Weight

16. CHEMICAL COMPOSITION (PERCENT)

Element		C	Si	Mn	S	P											
As Per Specn.	Min.																
	Max.																
Actual Values																	

17. HEAT TREATMENT
(To be accompanied by Recorder Chart, Whenever called for)

Condition	Heating Rate, °C/hr.	Temp.°C	Soaking Time, Hrs.	Cooling Rate, °C/hr	Cooling Medium

18. MECHANICAL PROPERTIES

		T.S. N/mm²	Y.S. 0.5/0.2% Proof N/mm²	% Elongation 5.65$\sqrt{So}$ GL	%R.A. Min.	Hardness BHN(Min.3 values)	Impact Value Joules	Bend Test		
								Angle of bend	Dia of mandrel	Result
As Per Specn.	Min.									
	Max.									
Actual Values										

19. SURFACE FINISH (When called for in the order/drg.)

20. DIMENSIONAL INSPECTION

21. NON-DESTRUCTIVE TESTS

Nature of Test	Acceptance level	Instrument used	Range	Results	Any other detail
Ultrasonic					
Radiographic					
Dye penetrant/ Magnetic Particle					

22. METALLOGRAPHIC EXAMINATION
(To be conducted if called for and photo micrographs to be attached along with a report)

Location of Sample	Etchant used	Magnification	Constituent observed	Relative %	
Microstructure	Macroetch	Inclusion Rating			

23. OTHER TESTS IF ANY (MICROSCOPIC, SULPHUR PRINTS, ETC)

24. IDENTIFICATION OF FORGINGS AS PER PURCHASE .SPEC.

We hereby certify that the items mentioned above have been tested and inspected in our presence and are found to be in accordance with drawings, specifications and purchase order.

SIGNATURE, NAME & SEAL OF THE INSPECTING OFFICER
DATE:

SIGNATURE, NAME & SEAL OF THE CHIEF OF QUALITY CONTROL/ CHIEF METALLURGIST OF THE SUPPLIER
DATE:

INSTRUCTIONS

a) Details of all heat treatment processes carried out should be furnished sequentially in 17.
b) Test certificates are to be furnished as per Purchase order and specification, in A4 size preferably in transparent paper.
c) All the entries including signature should be in block colour ink.
d) If testing is done by outside agencies, the original TCs shall be furnished.
e) The actual TC may run into more than one A4 size paper, if needed, to facilitate filling up of details.

COPYRIGHT AND CONFIDENTIAL
The Information on this document is the property of BHARAT HEAVY ELECTRICALS LIMITED
It must not be used directly or Indirectly in any way detrimental to the Interest of the company.

PROCEDURE FOR MAGNETIC PARTICLE EXAMINATION

1.0 SCOPE:

1.1 This standard outlines the procedure for magnetic particle examination of ferro-magnetic materials.

1.2 Typical surface and subsurface discontinuities detectable by this method are cracks, seams, laps, cold shut, inclusions, etc.

1.3 This shall be applied to all forms of ferromagnetic material as formed and semiformal as well as, finished state, such as welds, forgings, castings, etc.

1 .4 This standard is generally based on ASTM E 709.

2. 0 PERSONNEL REQUIREMENT:

Personnel performing non-destructive examination and evaluation shall be qualified to the recommended practice SNT- TC-1A or any other recognised practice.

3.0 TEST METHOD:

-

4

Finely divided magnetic particles are applied to the surface of a part which has been suitably magnetised. The particles are attracted to regions of magnetic non-uniformity associated with defects and discontinuities, thus producing indications which are observed visually. The magnetic particle is applied either as dry powder or in a wet suspension in a liquid medium.

4.0 SURFACE CONDITION/PREPARATION:

The surface being inspected shall be clean and dry. It shall be free from dirt, oil, grease, sand, rust or loose scale. As cast or as welded surfaces are generally satisfactory if clean. A pressure blast is useful for this purpose. Thin paint does not interfere with the formation of indications but must be removed at points where electrical contact is to be made. If the surface is unusually rough, such as with burned in sand or very rough weld bead, interpretation may be difficult because the particle is being trapped mechanically. In case of doubt, light grinding may be necessary to determine if actual indications are present..

5 .0 SEQUENCE OF OPERATION:

5.1 Method Of Examination:

Examination shall be generally carried out by the continuous method, i.e., the magetising current remains on, while the examination medium is being applied and excess being removed.

5.2 Magnetisation:

Any suitable and appropriate means for establishing the necessary magnetic flux may be employed, such as passing current through the material (e.g. 'Prod' method) using magnetic yoke, or wrapping the part with a coil through which a magnetising current is passed.

5.3 Examination Medium:

5.3.1 The finely divided ferromagnetic particles used for detection of discontinuities shall be of fine grain and the same shall be of high permeability and low retentivity. It shall be of dry powders (Fluorescent and nonfluoresent) ready for use, as supplied or powder concentrates (Fluorescent and non-fluoresent) for dispersion in water or suspending light petroleum distillates.

5.3.2 Dry Particles:

When dry particles are used, they shall be sprayed either by a low pressure pneumatic instrument or hand operated bulb blower. Colour of the powder shall be such as to provide adequate visual contrast with the back ground of the surface being examined. The temperature of the surface of the part under examination shall not exceed 315℃ (600*F). Adequate lighting should be provided for easy observation of the indication. Some coloured organic coatings applied to dry particles to improve contrast lose their colour at higher temperatures- Fluorescent dry particles shall not be used at this high temperature. Manufacturer's recommendations for temperature limitation shall be followed.

5.3.3 Wet Particles:

When wet particles are used, the solid magnetic particles shall be suspended in a suitable liquid medium. The concentration of the particles in the"liquid medium shall be 0.2 to 0.4 ml in a 100ml sample for fluorescent particles and from 1.2 to 2.4 ml in a 100 ml for non-fluorescent particles unless otherwise specified by the particle manufacturer.

5. 3 .4 Florescent Particlaes

5. 4. 3. 1 The fluorescent particle examination shall be performed using a black light in a darkned area.

•

5. 3. 4. 2 The black light used for fluorescent particle testing shall be capable of developing the wave length of 365mm; in any case the wave length should be in the range of 330 to 390nm. with an intensity of not less than 1000 uw/cra^2 on t surface of the part.

5. 3. 4. 3 The black light shall be allowed to warm up for a minimum of 5 min. prior to its use or measurement of the intensity of the ultraviolet light emissio**n.**

5. .3. 4. 4 The examiner shall be in the darkened area for atleast 5 min. prior to examining the parts using black light so that his eyes will adopt to dark viewing. Photochromic or permanently tinted lenses shall not be worn during examination.

5. 3. 4. 5 The black light intensity shall be measured with a black light meter at least once every 8 hours and whenever the work station is changed.

5. 4 Orientation of Discontinuities And Examination Coverage:

Examination shall be conducted with sufficient overlap to ensure cent percent coverage at established test sensivity. To ensure most effective detection of discontinuities each area shall be examined at least twice with the lines of flux approximately perpendicular to each other.

5. 5 Demagnetisation:

Demagnetisation following examination shall be carried out where residual magnetism can interfere with subsequent process or usage. Demagnetisation is not normally required on the type of parts where the dry powder Prod magnetisation is used.

6.0 METHODS OF MAGNETISATION:

6.1 Prod Method:

6.1.1 Magnetising Technique:\

6. 1. 1. 1 Magnetisation shall be accomplished by portable Prod type electrical contacts pressed against the surface in the area to be examined. To avoid arcing, a remote control switch may be provided to permit the current to be turned on after the prods have been properly positioned and turned off before they are removed.

6.1.2 Prod Spacing:

Prod Spacing shall be maximum of 200 mm. Shorter spacing may be used to meet the limitation of geometry or dimensions of the area being examined, or to increase the sensitivity, but prod spacing less than 75 mm usually is not recommended owing to banding of the particles around the prods

6. 1. 3 **Magnetising Current:**

Alternating, direct or rectified magnetising current shall be used. The current shall be 90 to 110 A per 25mm. of prod spacing for sections less than 19mm. thick and 110 to 125 A per 25mm. prod spacing for sections 19mm. and greater.'

6. 1. 4 Prod shall be kept free of iron pick up by frequent filing. Local areas of metal being tested which have been subjected to arcing shall be ground to clean metal wherever necessary.

6. 2 Coil Method:

6. 2 .1 Magnetising Technique:

Magnetisation shall be accomplished by pressing current thought a nultiturn coil looped around the part or section of the part to be examined to produce a magnetic field paralled to the axis of the coil.

6. 2. .2 Magnetising Current:

6. 2 .2 .1 Encircling Coils:

There are four empirial longitudinal magnetization formulas for using encircling coils , the formulas to be used depending on the fills factor.

6. 2.. 2.. 1 .1 Low Fill Factor Coils: In this case **,** the cross sectional area of the fixed encircling coil greatly exceed the cross sectional area of the part (Less than 10% coil inside diameter). The part shall be placed well within the coils ans close to the inside wall of the coil. For parts with length over diameter ratio (L/D) between 3and 15 is calculated from the following equations.

(1) **<u>Parts with low fill factor positioned closed to the inside wall of the coil in the center of the coil;</u>**

$$= \frac{45{,}000}{L/D} \text{ Ampere Turns } (\pm 10\%)$$

(2) <u>Parts with a low fill factor positioned in the center of the coils:</u>

$$= \frac{43{,}000 \times R}{(6\,L/D) - 5} \text{ Ampere Turns } (\pm 10\%)$$

6. 2. 2. 1.2 Intermediate Fill Factor Coils:

When the cross section of the coil is greater than twice and less than ten times the cross section of part being examined.

= (NI) hf (10-4) + (NI) If (4 -2)/8

Where

NIhf = Value calculated for high fill factor coils using

$$\frac{35000}{(L/D) + 2} \quad (10\%)$$

NIlf = Value Calculated for low fill factor coils using

$$\frac{43/000 \times R}{(L/D) - 5} \quad (10\%)$$

Where R = Coil Radius
Y = Ratio of the cross sectional area of the coil to the cross section of the part.

For example if the coil has an inside diameter of 24 cm. and part (a bar) has outside diameter of 12 cm.

$$Y = \frac{n(12)^2 \; {}^{=}4}{n(6)2}$$

6. 2. 2 .1 .3 **High Fill Factor Coils:**

In this case, when fixed coils or cable wraps used and the cross sectional area of the coil is less than twice the cross sectional area (Including hollow portions) of the part, the coil has a high fill factor.

For parts with in a high fill factor positional coil and for parts with L/D ratio equal or greater than 3.

$$= \frac{35,000}{(L/D)+2} \text{ Ampere turns } (+ 10\%)$$

L/D ratio for a hallow piece: When calculating L/D ratio for a hollow piece, D shall be replaced with an effective diameter Deff. Calculated using.

Deff. = [(At - Ah)/n]^.

Where
At = Total cross section area of part
Ah = Cross sectional area of hollow portion(s) of the part.

For a cylindrical piece this is equivalent to
Deff. = $[(OD)^2 - (ID)^2]$^

Where
OD = Outside diameter of cylinder
ID = Inside diameter of cylinder.

6. 2. 2. 2 Through Coils:

For through coils the current specified in para 6.3.2 divided by number of turns shall be used.

6.3 Direct Contact Method:

6.3.1 Magnetising Technique:

Magnetising shall be accomplished by passing current end to end through the part to be tested to produce a circular magnetic field perpendicular to the current "flow through the part.

6.3.2 Magnetising Current :

Direct or rectified current shall be used at 280 to 360 amperes per centimeter of part for diameter upto 125 mm; 200 to 280 amperes per centimeter of part for diameter grater than 250mm.
(Note: A different means of magnetisng shall be used for the second examination to fulfill the requirements specified in Cl.5.4).

6.4 Yoke Method:

6.4.1 Application:

This method shall be used only to detect surface discontinuities which actually come to the surface.

6.4.2 Magnetising Technique:

6.4.2.1 Alternating current electromagnetic yoke shall be used to magnetise, provided the yoke has a lifting power of at least 4.5 Kg and a pole spacing of 75 to 150 mm.

6.4.2.2 Alternatively direct current electromagnetic or permanent magnetic yoke shall be used to magnetise, provided the yoke has a lifting power of at least18 kg and a pole spacing of 75 to 150 mm.

6.5 Threading Bar and Coil Technique:

6 .5 .1 If the part is hollow, flaws in a longitudinal direction may be detected by passing the magnetising current through a bar or cable held within the bore of the part. Alternatively a threading coil may be used.

6. 5. 2 The current strength shall be equivalent to not less than 10500 ampere turns (a.c; r.m.s value) or 15000 ampere turns (d.c.) per metre of the maximum distance of the bar cable from the surface of the bore of the part.

6. 5. 3 Because of limitations of the equipment, it m<^ be necessary to magnetise the part at several positions within the bore, with the bar or cable lying on the bore surface, in which case the distance between spacing of the conductor or coil for successive checks shall not be grater than 100 mm.

Note: Magnetising particle field indicator shall be used to establish adequacy of the magnetic field.

7. 0 CALIBRATION:

Calibration of the ammeter shall be done as per BHEL Standard AA 085 01 59.

8.0 EVALUATION OP INDICATIONS & INTERPRETATION:

8.1 If the indication is caused by the surface discontinuity the particles are usually tightly held to the surface by a relatively strong magnetic leakage field. The line of particles will be sharp and well defined.

8.2 If the indication is caused by surface discontinuity, the particles are held in a board fuz2y accumulation rather than being sharp and well-defined.

8.3 Non-relevant indications are caused by distortion of magnetic field resulting from magnetic writing, cold working, hard and soft spots, boundaries of heat affected zone, abrupt change of section, etc. Care shall be taken to identify and eliminate them as they may mask the actual defect.

8.4 Relevant indications are those which result from mechanical discontinuities. Linear indications are those in which the length is more than three times the width. Rounded indications are indications in which are circular or* elliptical with the length less than three times the width.

9.0 REFERRED STANDARDS (Latest Publication Including Amendments):

1. ASTM E 70
2. BHEL CS AA 085 01 59

COPYRIGHT AND CONFIDENTIAL
The information on this document is the property of BHARAT HEAVY ELECTRICALS LIMITED.
It must not be used directly or indirectly in any way detrimental to the interest of the company.

ACCEPTANCE STANDARDS FOR INDICATIONS REVEALED DURING MAGNETIC PARTICLE EXAMINATION OF STEEL FORGINGS

1.0 SCOPE:

This standard gives the acceptance norms for indications revealed during the magnetic particle inspection of steel forgings used for general applications.

2.0 PROCEDURE:

The procedure, requirement of equipment, consumables and personnel shall be as per BHEL standard AA 085 01 33 which is generally based on ASTM E 709.

3.0 ACCEPTANCE NORMS:

Following defects are unacceptable.

Category I:

i) Any cracks/linear indication.

ii) Rounded indication larger than 3mm size.

iii) Groups of rounded indications with individual size of 3mm or less and separated by a distance of less than 2 times the largest defect.

Category II:

i) Any cracks/linear indication.

ii) Rounded indication larger than 6mm size.

iii) Groups of rounded indications with individual size of 6mm or less and separated by a distance of less than 2 times the largest defect.

4.0 REFERRED STANDARDS(Latest Publications Including Amendments):

1. BHEL CS AA 085 01 33
2. ASTM E 709

COPYRIGHT AND CONFIDENTIAL
The information on this document is the property of BHARAT HEAVY ELECTRICALS LIMITED,
It must not be used directly or indirectly in any way detrimental to the interest of the company.

DOUBLE UPPER BEARING JOURNALS ASSEMBLY PROCEDURE FOR 583-1103 PULVERIZERS

1.0 SCOPE:

This standard covers assembly procedure for Double Upper Bearing journals.

2.0 CONTENT:

a) ESTABLISH UPPER BEARING BENCH END PLAY
Measure the upper journal-housing bore. Grind the bearing spacer.

b) ASSEMBLE BEARING HOUSING AND CHECK END –PLAY
Install the double bearing in the upper journal housing. Install bearing keepers and shims. Check upper bearing end play.

c) ASSEMBLE THE LOWER JOURNAL HOUSING SUB-ASSEMBLY.

Grinding roll with lock nut (taper fit connection).
Grinding roll with keeper plate (shrink fit connection).
Grinding roll with keeper plates (taper fit connection).
Install the lower journal-bearing cup.

d) JOURNAL SHAFT SUB-ASSEMBLY

Check shafts straightness and roundness
Assembly of long spacer shaft journals.
- Install the oil seal wear ring.
- Install the upper bearing assembly.
- Install the lower journal-bearing cone.
- Install bearing keeper and shim assembly.

Assembly of large diameter shaft journals.
- Install the lower bearing cone.
- Install bearing keeper and shim assembly.

e) ASSEMBLY THE JOURNAL SHAFT TO THE HOUSING ASSEMBLIES CHECK JOURNAL ASSEMBLY END PLAY

Journal shaft and housing sub-assemblies.
Check Journal assembly bearing end play.

COPYRIGHT AND CONFIDENTIAL
The information on this document is the property of BHARAT HEAVY ELECTRICALS LIMITED,
It must not be used directly or indirectly in any way detrimental to the interest of the company.

TABLES

Spacer Grinding Dimensions, 583-743 Pulverizers - Table 1
Spacer Grinding Dimensions, 823-863 Pulverizers - Table 2
Spacer Grinding Dimensions, 883-943 Pulverizers - Table 3
Spacer Grinding Dimensions, 883-1003 Pulverizers - Table 4A&4B
Spacer Grinding Dimensions, 963- 1103 Pulverizers - Table 5A&5B
Pulverizer Journal lift load and End play - Table 6

FIGURES

Determination of bore diameters - Figure 1
Journal Bearing spacer length determination - Figure 2
Journal Bearing outside diameter - Figure 3
Bearing keeper Shim pack - Figure 4
Torque Specification Chart - Figure 5
End play fixture - Figure 6
Upper Bearing End play - Figure 7
Roller Bearing Housing Interference - Figure 8
Roller Bearing Housing Shim pack - Figure 9
Lower Journal Housing bore dimensions & Interference - Figure 10
Shaft out of Round and Straightness - Figure 11
Journal Housing Flange Gap Shims - Figure 12
Journal Assembly End play - Figure 13
Journal Head Skirt Flange Gap - Figure 14

APPENDEX

Upper bearing Bench end Play (Special) -Appendix A

COPYRIGHT AND CONFIDENTIAL
The information on this document is the property of BHARAT HEAVY ELECTRICALS LIMITED,
It must not be used directly or indirectly in any way detrimental to the interest of the company.

The assembly of a pulverizer journal shaft with double upper bearings requires several distinct steps performed in the proper sequence to assure that proper clearances are obtained. Proper clearances must be obtained to ensure maximum bearing life.

I. Establish the upper bearing bench end play by grinding the spacer supplied with the double bearing.

II. Assemble the upper journal housing subassembly and check the bearing end play.

III. Assemble the lower journal housing sub-assembly and install the journal roll.

IV. Assemble the journal shaft sub-assembly.

V. Assemble journal shaft sub-assembly and journal housing assemblies. Check the journal assembly bearing end play.

NOTE:

Extra sets of the Figures in this section should be available to record measurements, readings and settings made. These may be retained for an equipment maintenance history.

CAUTION:

Because the measurements taken during the assembly of the Bearings must be so precise, all of the components and measuring tools must be at 70° F. (21 ° C). If this is not practical, then the measurements must be corrected for Thermal expansion to 70 ° F. (21 ° C).

CAUTION:

Upper Journal Bearings are supplied in matched and serialized sets. The cups and cones are not interchangeable. Each cup must be kept with its mating cone. The bearing spacer is also matched with the cups and cone and should not be interchanged with other bearings. If an error occurs in the grinding and as a result the bench endplay is out of tolerance, the spacer may be reworked. Add material to the ground surface by welding, flame spraying or plating and regrind to the correct dimension.

COPYRIGHT AND CONFIDENTIAL
The information on this document is the property of BHARAT HEAVY ELECTRICALS LIMITED,
It must not be used directly or indirectly in any way detrimental to the interest of the company.

I. ESTABLISH UPPER BEARING BENCH END PLAY

NOTE

Journal assemblies 101-00920, 101-00921 and 101-00333 using upper bearing P/N GP-1668 require a slightly different bench end play setting procedure, refer to Appendix "A".

1.0 Measure and record the upper journal housing bearing bore. Use procedures and Figure 1. Retain data for future reference.

NOTE

Refer to Table 1 through 6, select the correct pulverizer size, journal housing and bearing part numbers. Use the bore measurement from step1.0 to determine the recommended amount to grind the bearing spacer.

Table	Pulverizer	Journal Housing P/N	Journal Brg. P/N
1	643-663	GP-3325	GP-3339
2	683- 743	GP-3988	GP-2908
	763-803	GP-3971	GP-2908
	823-863	86-922	GP-2908
3	883-943	GP-3067	GP-3064
4	883-943	94-852	GP-2484
	963-1003	101-00971	GP-2484
5	963-1003	101-01081	GP-1668
	1023-1103	110-00667	GP-1668
6	883-1003	GP-3810	GP-1668
	1023-1103	110-00760	GP-1668

COPYRIGHT AND CONFIDENTIAL
The information on this document is the property of BHARAT HEAVY ELECTRICALS LIMITED,
It must not be used directly or indirectly in any way detrimental to the interest of the company.

2.0 Grind the bearing spacer

2.1 Measure and record the spacer length, use procedure Figure 2.

2.2 Reference the average bore measurement made in step 1.0, grind the spacer.

2.3 Measure and record the spacer ground length.

CAUTION

THE BEARING, SPACER AND HOUSING ARE NOW A MATCHED SET. THE BEARING AND SPACER ARE NOT INTERCHANGEABLE WITH OTHER HOUSINGS.

II. <u>ASSEMBLE BEARING IN HOUSING AND CHECK END PLAY</u>

3.0 Install the double bearing in the upper journal housing.

3.1 Measure and record the bearings outside diameter use procedures Figure.3

3.2 Calculate the bearing, bearing housing interference fit by subtracting the average housing bore diameter D, from the average bearing outside diameter FAVG. Figure 1 and 3.

For ease of assembly each 0.001” (0.0254 mm) of interference requires a 10 ° F (5.5° C) temperature differential between the bearing cups and bearing housing.

To facilitate future disassembly coat the O.D of the bearing cups with Molykote 41 or equal (If bearings are chilled for insertion coat the bearing housing bore).

3.3 Heat the upper journal housing to approximately (175 ° F) (80 ° C)

NOTE:

As an alternate assembly method, the bearing cups and spacer may be chilled in dry ice instead of heating the bearing housing. If the chilling method is used, the bearing cups, cones and roller bearings must be completely coated with the recommended journal oil immediately after assembly to prevent water etching. The assembly sequence is the same, see steps 3.4 and 3.5

COPYRIGHT AND CONFIDENTIAL
The information on this document is the property of BHARAT HEAVY ELECTRICALS LIMITED,
It must not be used directly or indirectly in any way detrimental to the interest of the company.

3.4 Install the lower bearing cup squarely in the housing, follow in rapid order and sequence with the finish ground bearing spacer, the bearing cone assembly(s). the second bearing cup, the bearing ring (if so equipped) and the bearing keeper.

3.5 Insert and torque the bearing keeper bolts bolts to 50-ft lbs (6.91 kgm) to ensure that the bearing cup and spacer stack is properly seated.

3.6 Allow the housing and bearings to return to room temperature.

4.0 Install bearing keeper and shims

4.1 Using a 0.001" (0.0254 mm) feeler gauge, check between the bearing housing shoulder and the bearing cup to assure the bearing cup is properly seated.

4.2 Relieve tension on the bearing keeper cap screws to finger tight.

4.3 Measure the gap between the end face of the housing and the bearing keeper in four places, reference Figure "4". Average the measurements.

4.4 Assemble a shim pack with a total thickness of 0.003" to 0.005" (0.0762 mm to 0.127 mm) less than the gap measured in step 4.3. Check the thickness of the shims with a micrometer.

4.5 Remove cap screws and bearing keeper. Assemble the shim pack to the upper housing making sure that the shims do not block the oil return holes in the housing.

4.6 Replace the bearing keeper, align the oil holes.

4.7 Use a thread locking/ sealant, reinstall the cap screws and uniformly torque. Figure "5".

5.0 Check upper bearing end play

5.1 Arrange the upper journal housing and bearings in the end play fixture available from combustion Engineering. Refer to Figure 6.
A base capable of withstanding a lift load of 4400 lbs (2000Kg) must be provided.

5.2 Attach an overhead hoist, a come-along and a direct reading load cell of approximately 5-ton capacity to the eyebolt of the end play fixture. All components must be of sufficient capacity to with stand the lift load for your bearing, upper housing assembly given on the upper bearing lift load and End play Table, Table 6.

COPYRIGHT AND CONFIDENTIAL
The information on this document is the property of BHARAT HEAVY ELECTRICALS LIMITED,
It must not be used directly or indirectly in any way detrimental to the interest of the company.

5.3 Mount three dial indicators as shown in Figure 6. Rest the contact buttons on the top of the housing.

5.4 Rotate the housing at least five revolutions in one direction to seat the bearing rollers.

5.5 Zero the dial indicators and mark their position on the housing.

5.6 Raise the housing and bearing cups with the come –along until the load cell reads the lift load value determined in step. 5.2

5.7 Turn the housing five revolutions in one direction. Return the dial indicators to their original position record the readings, refer to Figure 7.

5.8 Lower the come- along until the load on the housing is released.

5.9 Turn the housing five revolutions in one direction. Return the dial indicators to their original position and record the indicator readings.

5.10 If the indicators have returned to zero ± 0.0005" (± 0.0127mm) in step 5.9 calculate and record the average indicator reading for step 5.7 on the worksheet. If the indicators do not return to zero ± 0.0005" (± 0.0127mm) disregard the average reading.

5.11 Repeat steps 5.5 through 5.10 until at least three average readings are recorded on the worksheet.

5.12 Average the average readings on the worksheet and record. The final value must be within the end play limits give on the upper bearing end play table, table 6 or the assembly must be reworked.

III **ASSEMBLE THE LOWER JOURNAL HOUSING SUB-ASSEMBLY.**

6.0 There are three types of lower journal housing sub-assemblies available. Select the correct assembly procedure for your type, Items 6.1, 6.2, or 6.3.

6.1 Grinding roll with lock nut (taper fit connection).

6.1.1 Use Prussian blue to determine the contact pattern between the lower housing taper and the grinding roll taper. There must be at least 80% contact between the mating tapers and any no contact zones must not exceed 10 ° of arc. Modify the roll to achieve proper contact.

COPYRIGHT AND CONFIDENTIAL
The information on this document is the property of BHARAT HEAVY ELECTRICALS LIMITED,
It must not be used directly or indirectly in any way detrimental to the interest of the company.

6.1.2 Once the taper contact has been verified, press the grinding roll and lower housing together with 50 tons force.

6.1.3 Tighten the locknut on the lower housing while maintaining the 50 ton force.

6.1.4 Spot drill the grinding roll through the set screw holes.

6.1.5 Install the cone point set screws with Loctite 271 or equal and torque to 50 ft- lbs (6.9 kgm).

6.1.6 Use a pipe thread sealant, install the 1” hex socket pipe plug in the oil drain hole in the lower housing and stake in two places.

6.2 Grinding roll with keeper plate (Shrink fit connection reference figure 1 and 3 and Record sheet, Fig. 8.

6.2.1 Measure the grinding roll bore (B AVG) and the lower bearing housing outside diameter (F AVG). subtract B AVG from F AVG, the interference must be between 0.001” to 0.009” (0.254 mm to 0.2286mm) or the parts must be rejected, that is mated with other components.

6.2.2 Heat the grinding roll evenly to 250 ° F (120 °C) maximum, use an oven if practicable. Check roll temperature continuously with thermocouples or temperature sticks to ensure roll is heated evenly.

6.2.3 Lower the roll on the lower housing. Make sure the outside roll taper is in the correct direction.

6.2.4 Install the keeper plate and bolts. Torque the bolts to 50 ft-lbs (6.9 kgm) to seat the roll against the housing shoulder.

6.2.5 Allow the roll and housing to return to room temperature than remove the keeper plates and bolts. Measure from the roll face to the housing face with a depth micrometer in six places, reference figure 9. Average the measurements.

6.2.6 Prepare a shim pack 0.003” to 0.005” (0.0762 mm to 0.127 mm) less than the value measured in step 6.2.5. check shim pack with a micrometer.

6.2.7 Position shim pack and keeper plates.

6.2.8 Install bolts with a locking/ sealant and torque per Figure 5. Tack weld the bolt heads to the keeper plate.

COPYRIGHT AND CONFIDENTIAL
The information on this document is the property of BHARAT HEAVY ELECTRICALS LIMITED,
It must not be used directly or indirectly in any way detrimental to the interest of the company.

6.3 Grinding roll with keeper plates (taper fit connection)

6.3.1 Use Prussian blue to determine the contact pattern between the lower housing taper and the grinding roll taper. There must be at least 80% contact between the mating tapers and any no contact zones must not exceed 10 ° of arc. Modify the roll to achieve proper contact.

6.3.2 Once the taper contract has been verified, install the grinding roll on the housing. Measure and record the gap between the end face of the roll and the end face of the housing. Reference Figure 9.

6.3.3 Prepare a shim pack 0.005” to 0.007” less than gap measured in step 6.3.2. Install shim pack, keeper plate and cap screws. Torque cap screws to the value given on the assembly drawing.

6.3.4 Remove the cap screws, keeper plates and shim packs. Remeasure gap (step 6.3.2) noting any change. If gap has changed more than 0.002” (0.051 mm) repeat step 6.3.3 preparing a shim pack based on the new gap. Repeat until gap no longer changes after bolts are torque.

6.3.5 Prepare a shim pack of 0.003” to 0.005” (0.076 to 0.127 mm) less than final gap. Install shim pack, keeper plate and cap screws. Torque cap screws to the value given on the assembly drawing and tack weld to the keeper plates.

7.0 Install the lower journal bearing cup.

7.1 Using procedures on Figure 1, measure the lower journal housing bearing and pilot bores and record the measurements on Figure 10. Take measurements at the top and bottom of each bore. All the measurements for a given bore must be alike within 0.001” (0.0254 mm) T.I.R. (Calculate the average bore diameter.

7.2 Measure the O.D of the lower journal-bearing cup, reference procedures on Figure-3. Record on figure 10.

7.3 Calculate the bearing housing interference, F^3 AVG minus DB. It must be between 0.001” and 0.007” (0.025 and 0.178 mm)

7.4 Coat the lower journal housing bearing bore with Molykote 41 or equal.

7.5 Chill the lower bearing cup in dry ice or liquid nitrogen and install in lower housing.

COPYRIGHT AND CONFIDENTIAL
The information on this document is the property of BHARAT HEAVY ELECTRICALS LIMITED,
It must not be used directly or indirectly in any way detrimental to the interest of the company.

CAUTION.

AS THE BEARING CUP RETURNS TO NORMAL TEMPERATURE. WIPE DRY AND COAT WITH JOURNAL OIL TO PREVENT WATER ETCHING.

7.6 After the cup has returned to room temperature, check beneath the cup with a feeler gauge to assure proper seating. A 0.001" (0.025 mm) feeler gauge must not fit between the bearing cup and the housing backing shoulder.

IV **JOURNAL SHAFT SUB-ASSEMBLY**:

NOTE

Journals are supplied with two different styles of journal shaft, shafts with a long spacer between the upper and lower bearings and shafts with a large shaft diameter between the upper and lower bearings. Journal shaft sub-assembly and housing assembly techniques are different for the two styles.

8.0 Check the journal shaft for straightness and roundness. Measure and record the information, reference Figure 11. The shaft must be straight and round within 0.001" (0.025mm).

9.0 Assembly of long spacer shaft journals.

9.1. Install the oil seal wear ring.

9.1.1. Measure the I.D of the oil seal wear ring, reference procedures on Figure 1 compare with shaft O.D. measurements, N. recorded on figure 11. The interference must be between 0.004 " and 0.011". (0.102 to 0.28 mm)

9.1.2. Heat oil seal wear in an oven or in oil to 300 ° F maximum.

9.1.3 Locate oil seal wear ring on journal shaft as shown in the assembly drawing (either by a given dimension or against a shaft shoulder). Allow wear ring to cool.

9.2 Install the upper bearing assembly.

9.2.1 Lubricate the upper journal-bearing seat on the journal shaft with standard journal oil.

9.2.2 Install one oil seal facing inward into the upper journal housing and then the remaining two with the lip pointing outward. Coat the seal lips and fill the cavities between the seals with Molykote 33 or equal grease.

COPYRIGHT AND CONFIDENTIAL
The information on this document is the property of BHARAT HEAVY ELECTRICALS LIMITED,
It must not be used directly or indirectly in any way detrimental to the interest of the company.

CAUTION

AVOID MARRING THE SHAFT BLENDED RADIUS FINISH OR DAMAGING THE OIL SEAL DURING ASSEMBLY.

9.2.3 Assemble the upper bearing and housing on the journal shaft. A clearance or 0.002" to 0.004" should exist between the shaft and the upper bearing (0.051 to 0.102 mm)

9.2.4 Slip the journal-bearing sleeve (long spacer) onto the journal shaft. The bearing spacer is marked so that the slots are assembled toward the lower bearing.

9.3. Install the lower journal-bearing cone.

9.3.1 Assemble the lower bearing spacer (if applicable) on the journal shaft. The Chamfer on the spacer must clear the shaft fillet.

9.3.2 Coat the lower bearing seat on the journal shaft with Molykote 41 or equal.

9.3.3. Check the I.D of the bearing cone, use procedure Figure 1 and compare with shaft measurement K, Figure 11. The interference must be between 0.001" and 0.007" (0.025 to 0.178 mm)

9.3.4 Heat the bearing cone in an oven or oil bath to 250 ° F (120 ° C) maximum and install it on the journal shaft.

9.3.5 Install the bearing keeper and torque cap screws to 100 ft.lbs (14 kgm)

9.3.6 Allow bearing to return to room temperature.

9.3.7 Check with a feeler gauge to assure proper seating of the bearing. A 0.001" (0.025 mm) feeler gauge must not fit between the bearing spacer and cone or the shaft and cone.

9.4 Install bearing keeper and shim assembly.

9.4.1. Remove cap screws and journal bearing keeper.

9.4.2. Measure the gap between the shaft end and the bearing face with a depth, micrometer in four places. Reference figure 4. Average the readings.

9.4.3. Prepare a shim pack with a total thickness of 0.003" to 0.005" (0.076 to 0.127 mm) less than the average gap measured in step 9.4.2 Check Shims with a micrometer.

COPYRIGHT AND CONFIDENTIAL
The information on this document is the property of BHARAT HEAVY ELECTRICALS LIMITED,
It must not be used directly or indirectly in any way detrimental to the interest of the company.

9.4.4. Assemble shim pack, keeper plate, lock plate and cap screws to the journal shaft. Torque cap screws per Figure 5.

9.4.5. Bend the lock plate against the nearest flat on the cap screws. Go to procedure V.

10. Assembly of large diameter shaft journals.

10.1 Install the lower bearing cone.

10.1.1. Coat the lower bearing seat on the journal shaft with Molykote 41 or equal.

10.1.2 Check the I.D of the bearing cone use procedures Figure 1 and compare with the shaft measurement K. Figure 11. The interference must be between 0.001” and 0.007” (0.025 to 0.178mm)

10.1.3 Install the lower bearing cone on the journal shaft after heating it in an oven or oil bath to 250 ° F maximum (120 ° C)

10.1.4 Install the bearing keeper and torque cap screws to 100 ft lbs (14 kgm).

10.1.5 Allow lower bearing cone assembly to return to room temperature.

10.1.6 Check with a feeler gauge to assure proper seating of the bearing. A 0.001” (0.025mm) feeler gauge must not fit between the shaft shoulder and the bearing cone.

10.2 Install bearing keeper and shim assembly.

10.2.1 Remove the cap screws and journal bearing keeper.

10.2.2 Measure the gap between the shaft end and the bearing face with depth micrometer in four places. Reference Figure 4. Average the readings.

10.2.3 Prepare a shim pack with a total thickness of 0.003” to 0.005” (0.076 to 0.127 mm) less than the average gap measured in step 10.2.2. Check shims with a micrometer.

10.2.4 Assemble shim pack, keeper plate, lock plate and cap screws to the journal shaft. Torque cap screws per Figure 5.

10.2.5 Bend the lock plate against the nearest flat on the cap screws. Go to procedure V.

COPYRIGHT AND CONFIDENTIAL
The information on this document is the property of BHARAT HEAVY ELECTRICALS LIMITED,
It must not be used directly or indirectly in any way detrimental to the interest of the company.

V **ASSEMBLY THE JOURNAL SHAFT TO THE HOUSING ASSEMBLIES, CHECK JOURNAL ASSEMBLY END PLAY**

11.0 Journal shaft and housing sub-assemblies.

NOTE

Prior to assembly coat all bearings with standard journal oil.

11.1 Install a lifting eye in the end of the journal shaft.

11.2 On Journal shafts with the long spacer, lower journal shaft and upper housing assembly without the "O" ring or the spring pins into the lower housing and seat the lower bearing cone in its cup.

11.3. On large diameter shaft journals, lower the journal shaft sub-assembly into the lower housing and seat the lower bearing cone in its cup. Install the bearing spacer on shaft, if applicable, then lower the upper housing sub-assembly, without the "O" ring or spring pins, over the shaft and into the lower housing.

11.4 Turn the shaft five complete revolutions in one direction.

11.5.Measure the gap between the upper and lower journal housing flanges in eight places. 45° increments, with feeler gauges. Record the reading, reference Figure 12. All readings should be alike within 0.003" . (0.076 mm) Average the readings.

11.6. Refer to item 5.0, Figure 6 and the assembly End Play Table, Table 6 . Prepare a shim pack with a thickness equal to the average housing gap, step 11.5, plus ½ the end play of the two row upper bearing, Figure 6, plus value "A" from the Assembly End Play Table, Table 6 . Check the shim pack with a micrometer.

11.7. Remove the journal shaft and upper housing assembly (or the upper housing sub-assembly) from the lower housing.

11.8. Install the "O" ring in the upper housing groove and grease lightly with Molykote 33 or equal. Install the spring pins in the lower housing.

11.9.Re-assemble the lower housing, shaft assembly and upper housing with the prepared shim stack. Do not pinch the "O" ring.

11.0 Apply loctite 277 or equal to the hex socket head cap screw threads. Install cap screws and torque to assembly drawing specifications.

COPYRIGHT AND CONFIDENTIAL
The information on this document is the property of BHARAT HEAVY ELECTRICALS LIMITED,
It must not be used directly or indirectly in any way detrimental to the interest of the company.

12.0 Check Journal assembly bearing end play.

12.1 Fasten two rods threaded at their lower ends in the lifting holes in the flange of the upper journal housing.

12.2 Lock the rods with hex nuts.

12.3. Install a dial indicator on each rod. Mark the indicator locations (180º apart) on the top of the journal shaft.

12.4. Rotate the journal five revolutions in one direction and return the dial indicators to their marked locations.

12.5. Zero the indicators.

12.6. Use a come-along and a five ton load cell, carefully lift the journal shaft to the lift load given in Table 6 .

12.7. Rotate the shaft at least five revolutions in one direction and return the dial indicators to their original position.

12.8. Record the two indicator readings. Refer to Figure 13.

12.9. Lower the shaft to zero load on the load cell.

12.10. Rotate the journal shaft atleast five revolutions in one direction and return the dial indicators to their original position. Record the indicator readings.

12.11. If both indicators have returned to zero ± 0.005” (± 0.0127 mm) in step 12.10 average the readings take in step 12.8 and record.

12.12. Zero the dial indicators and repeat steps 12.6 through 12.11 until three average indicator readings, within 0.001” (0.025 mm) are obtained.

12.13. Average the three average readings.

12.14. The value obtained in step 12.13 should be ½ the end play of the two row bearing, Figure 6, plus value “A” from the Assembly End Play Table, Table 6 . The acceptable tolerance is ± 0.001” (± 0.025 mm).

12.15 If the journal assembly and play is not within acceptable limits, disassemble the housing, and adjust shims (steps 11.4 through 11.10) as required. After shims are adjusted, recheck journal assembly end play by repeating steps 12.1 through 12.14.

12.16 If the journal assembly end play is within the acceptable limits, remove the rods installed in step 12.1 and plug the lifting and jack screw holes in the upper journal bearing with set screws.

COPYRIGHT AND CONFIDENTIAL
The information on this document is the property of BHARAT HEAVY ELECTRICALS LIMITED,
It must not be used directly or indirectly in any way detrimental to the interest of the company.

COPYRIGHT AND CONFIDENTIAL
The information on this document is the property of BHARAT HEAVY ELECTRICALS LIMITED,
It must not be used directly or indirectly in any way detrimental to the interest of the company.

TABLE -1

				SPACER GRINDING VALUES		SPACER GRINDING VALUES	
HOUSING BORE (INCHE)		HOUSING BORE (MM)		TIMKEN		TORRINGTON	
				INCH	MM	INCH	MM
11.3700	11.3702	288.798	288.804	0.000	0.000	0.000	0.000
11.3703	11.3705	288.805	288.812	0.001	0.025	0.001	0.025
11.3706	11.3708	288.813	288.819	0.002	0.051	0.002	0.051
11.3709	11.3711	288.820	288.827	0.003	0.076	0.003	0.076
11.3712	11.3714	288.828	288.835	0.004	0.102	0.004	0.102
11.3715	11.3717	288.836	288.842	0.005	0.127	0.005	0.127
11.3718	11.3720	288.843	288.849	0.006	0.152	0.006	0.152

Spacer grinding Dimensions
Double upper bearing journals (Refer to figure 2)
643-663 pulverisers Upper journal housing P/N GP – 3325
Upper journal bearing P/N GP-3339

COPYRIGHT AND CONFIDENTIAL
The information on this document is the property of BHARAT HEAVY ELECTRICALS LIMITED,
It must not be used directly or indirectly in any way detrimental to the interest of the company.

TABLE -2							
HOUSING BORE (INCH)		HOUSING BORE (MM)		SPACER GRINDING VALUES (INCHE)			
				TIMKEN		TORRINGTON	
				INCH	MM	INCH	MM
13.2450	13.2452	336.423	336.429	0.000	0.000	0.000	0.000
13.2453	13.2455	336.430	336.437	0.001	0.025	0.001	0.025
13.2456	13.2458	336.438	336.444	0.002	0.051	0.002	0.051
13.2459	13.2461	336.445	336.452	0.003	0.076	0.003	0.076
13.2462	13.2464	336.453	336.460	0.004	0.102	0.004	0.102
13.2465	13.2467	336.461	336.467	0.005	0.127	0.005	0.127
13.2468	13.2470	336.468	336.474	0.006	0.152	0.006	0.152

Spacer grinding dimensions.
Double upper bearing journals (Refer to figure 2)

683-743 Pulverisers – Upper journal housing P/N GP – 3988
Upper journal bearing P/N GP – 2908
763-803 Pulverisers – Upper journal housing P/N GP-3971
Upper journal bearing P/N GP – 2908
823-863 Pulverisers - Upper journal housing P/N GP – 922
Upper journal bearing P/N GP - 2908

COPYRIGHT AND CONFIDENTIAL
The information on this document is the property of BHARAT HEAVY ELECTRICALS LIMITED,
It must not be used directly or indirectly in any way detrimental to the interest of the company.

TABLE -3

HOUSING BORE (INCH)		HOUSING BORE (MM)		SPACER GRINDING VALUES (INCHE)			
				TIMKEN		TORRINGTON	
				INCH	MM	INCH	MM
15.1200	15.1202	384.046	384.054	0.000	0.000	0.000	0.000
15.1203	15.1205	384.055	384.062	0.001	0.025	0.001	0.025
15.1206	15.1208	384.063	384.069	0.002	0.051	0.002	0.051
15.1209	15.1211	384.070	384.077	0.003	0.076	0.003	0.076
15.1212	15.1214	384.078	384.085	0.004	0.102	0.004	0.102
15.1215	15.1217	384.086	384.092	0.005	0.127	0.005	0.127
15.1218	15.1220	384.093	384.099	0.006	0.152	0.006	0.152

Spacer grinding dimensions.
Double Upper Bearing Journals (Refer to figure 2)
883-943 Pulverisers Upper Journal Housing P/N GP – 3067
Upper Journal Bearing P/N GP – 3064.

COPYRIGHT AND CONFIDENTIAL
The information on this document is the property of BHARAT HEAVY ELECTRICALS LIMITED,
It must not be used directly or indirectly in any way detrimental to the interest of the company.

TABLE -4A

HOUSING BORE (INCHE)		HOUSING BORE (MM)		SPACER OR VALUES TIMKEN	
				INCH	MM
15.9950	15.9952	406.273	406.279	0.000	0.000
15.9953	15.9955	406.280	406.287	0.001	0.025
15.9956	15.9958	406.288	406.294	0.002	0.051
15.9959	15.9961	406.295	406.302	0.003	0.076
15.9962	15.9964	406.303	406.310	0.004	0.102
15.9965	15.9967	406.311	406.316	0.005	0.127
15.9968	15.9970	406.317	406.324	0.006	0.152

COPYRIGHT AND CONFIDENTIAL
The information on this document is the property of BHARAT HEAVY ELECTRICALS LIMITED,
It must not be used directly or indirectly in any way detrimental to the interest of the company.

TABLE -4B

HOUSING BORE		HOUSING BORE		SPACER OR VALUES TORRINGTON	
INCH	MM	INCH	MM	INCH	MM
15.9950	15.9952	406.273	406.279	0.000	0.000
15.9953	15.9954	406.280	406.284	0.001	0.025
15.9955	15.9956	406.285	406.289	0.002	0.051
15.9957	15.9958	406.290	406.294	0.003	0.076
15.9959	15.9960	406.295	406.299	0.004	0.102
15.9961	15.9962	406.300	406.305	0.005	0.127
15.9963	15.9964	406.306	406.310	0.006	0.152
15.9965	15.9966	406.311	406.315	0.007	0.127
15.9967	15.9968	406.316	406.320	0.008	0.203
15.9969	15.9970	406.321	406.324	0.009	0.229

Spacer Grinding Dimensions.
Double upper bearing journals (Refer to figure 2)
883 – 943 Pulverisers – Upper Journal Housing P/N 94 – 852
Upper Journal Bearing P/N GP – 2484
963-1003 Pulverisers - Upper Journal Housing P/N 101-00971
Upper Journal Bearing P/N GP – 2484.

COPYRIGHT AND CONFIDENTIAL
The information on this document is the property of BHARAT HEAVY ELECTRICALS LIMITED,
It must not be used directly or indirectly in any way detrimental to the interest of the company.

TABLE -5A							
HOUSING BORE (INCHE)		HOUSING BORE (MM)		SPACER GRINDING VALUES			
				TIMKEN		TORRINGTON	
				INCH	MMS	INCH	MMS
17.9950	17.9952	457.073	457.079	0.000	0.000	0.000	0.000
17.9953	17.9955	457.080	457.087	0.001	0.025	0.001	0.025
17.9956	17.9958	457.088	457.094	0.002	0.051	0.002	0.051
17.9959	17.9961	457.095	457.102	0.003	0.076	0.003	0.076
17.9962	17.9964	457.103	457.110	0.004	0.102	0.004	0.102
17.9965	17.9967	457.111	457.117	0.005	0.107	0.005	0.127
17.9968	17.9970	457.118	457.124	0.006	0.152	0.006	0.152

Spacer Grinding Dimensions.
Double Upper Bearing Journals (Refer to figure -2)

963 -1003 Pulverisers Upper Journal Housing P/N 101-01081
Upper Journal Bearing P/N GP -1668

1023-1103 Pulverisers Upper Journal Housing P/N 111-00667
Upper Journal Bearing P/N GP -1668.

COPYRIGHT AND CONFIDENTIAL
The information on this document is the property of BHARAT HEAVY ELECTRICALS LIMITED,
It must not be used directly or indirectly in any way detrimental to the interest of the company.

TABLE -5B

HOUSING BORE (INCHE)		HOUSING BORE (MM)		SPACER GRINDING VALUES (INCHE)			
				TIMKEN		TORRINGTON	
				INCH	MM	INCH	MM
17.9950	17.9952	457.073	457.079	0.000	0.000	0.000	0.000
17.9953	17.9955	457.080	457.087	0.001	0.025	0.001	0.025
17.9956	17.9958	457.088	457.094	0.002	0.051	0.002	0.051
17.9959	17.9961	457.095	457.102	0.003	0.076	0.003	0.076
17.9962	17.9964	457.103	457.110	0.004	0.102	0.004	0.102
17.9965	17.9967	457.111	457.117	0.005	0.127	0.005	0.127
17.9968	17.9970	457.118	457.124	0.006	0.152	0.006	0.152

Spacer Grinding Dimensions.
Double Upper Bearing Journals (Refer to figure 2)

883 -1003 Pulverisers Upper journal housing P/N GP – 3810
Upper journal bearing P/N GP-1668.

1023-1103 Pulverisers Upper journal housing P/N 101 -00760
Upper journal bearing P/N GP – 1668.

COPYRIGHT AND CONFIDENTIAL
The information on this document is the property of BHARAT HEAVY ELECTRICALS LIMITED,
It must not be used directly or indirectly in any way detrimental to the interest of the company.

USAGE

When using this table ensure that the upper bearing and upper housing part number you are working with match those listed in the table.

The lift load in column 4 is used in determining upper bearing end play described in steps 5.1 through 5.12. The results obtained in step 5.12 should be compared with the values for the end play tolerance in column 5.

The values in column 7 are used in determining journal housing flange gap shims 11.5 and 11.6 and figure 12 and journal assembly end play steps 12.6 through 12.14 and figure 13.

Use the lift load values in column 6 in determining the journal assembly end play 12.6 through 12.14 and figure 13.

COPYRIGHT AND CONFIDENTIAL
The information on this document is the property of BHARAT HEAVY ELECTRICALS LIMITED,
It must not be used directly or indirectly in any way detrimental to the interest of the company.

TABLE -6

MILL SIZE	UPPER BEARING P/N	UPPER HOU-SING P/N	UPPER BEARING (REFER TO FIG 6)				JOURNAL ASSEMBLY			
			LIFT(1b)	LOAD (KG)	END PLAY (INCH)	END PLAY CE (MM)	LIFT (1b)	LOAD (KG)	END PLAY	
									INCH	MM
663 & 703	GP-3339	GP-3325	900	410	0.001-0.005	0.025-0.127	1100	500	0.004	0.102
HP 703	GP-2908	GP-3988	1800	817	0.002-0.006	0.051-0.152	1900	862	0.004	0.102
HP-803	GP-2908	GP-3971	1900	862	0.002-0.006	0.051-0.152	2400	1090	0.004	0.102
883-943	GP-2484	94-852	2200	997	0.002-0.006	0.051-0.152	2200	998	0.005	0.127
963-1003	GP-1668	101-01081	4000	1815	0.005-0.009	0.127-0.229	2200	998	0.006	0.152
XRP 1043 - 1103	GP-1668	110-00760	4400	1996	0.005-0.009	0.127-0.229	2200	998	0.006	0.152

COPYRIGHT AND CONFIDENTIAL
The information on this document is the property of BHARAT HEAVY ELECTRICALS LIMITED,
It must not be used directly or indirectly in any way detrimental to the interest of the company.

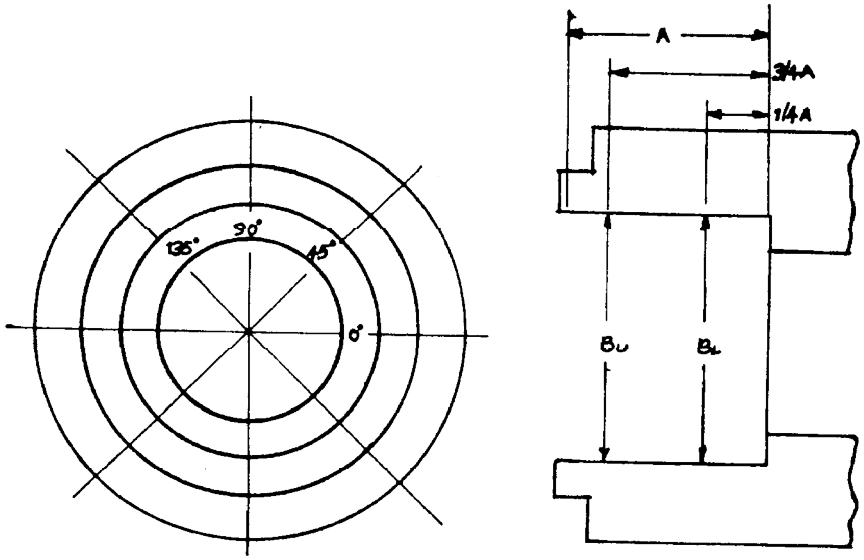

1. Use dial bore to determine bore dimensions.
2. Measure at two depths, 1/4A and 3/4A, on 45° increments, a equals the bearing length or bore depth which ever is smallest.
3. Record readings, B_U and B_L on the table below. All measurements must agree within 0.001" TIR (0.0254 mm TIR).
4. Average the upper, lower and total bore dimension Cu, CL. The average reading D must meet blue print specifications, that is base dimension + 0.002" / 0.000". (+0.051/0.000mm)

ORIENTATION	B_U UPPER DIMNS.	B_L LOWER. DIMNS.	AVERAGE
O°			
45°			
90°			
135°			
$\frac{B_0 + B_{45} + B_{90} + B_{135}}{4}$	C_U	C_L	
$\frac{C_U + C_L}{2}$			

FIGURE:1

COPYRIGHT AND CONFIDENTIAL
The information on this document is the property of BHARAT HEAVY ELECTRICALS LIMITED,
It must not be used directly or indirectly in any way detrimental to the interest of the company.

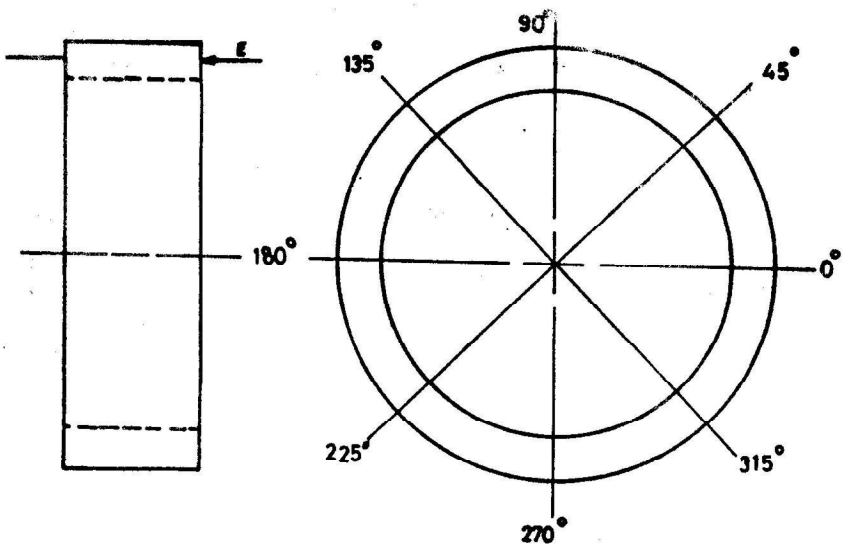

1. Use a micrometer to measure spacer length "E" at eight locations on 45° intervals prior to grinding.
2. Record and average readings.
3. Grind the spacer, remove material per tables-1-5.
4. Remeasure ground spacer, record and average readings.

OIRENTATION	DIMENSION E-NEW	DIMENSION E-GROUND
0°		
45°		
90°		
135°		
180°		
225°		
270°		
315°		
E. AVG..	E_{NEW} =	E_{GROUND} =

$$E_{AVG} = \frac{E_0 + E_{45} + E_{90} + E_{135} + E_{180} + E_{225} + E_{270} + E_{315}}{8}$$

Figure – 2: Journal Bearing Spacer Length Determination&Fig.A-3 for Avg.

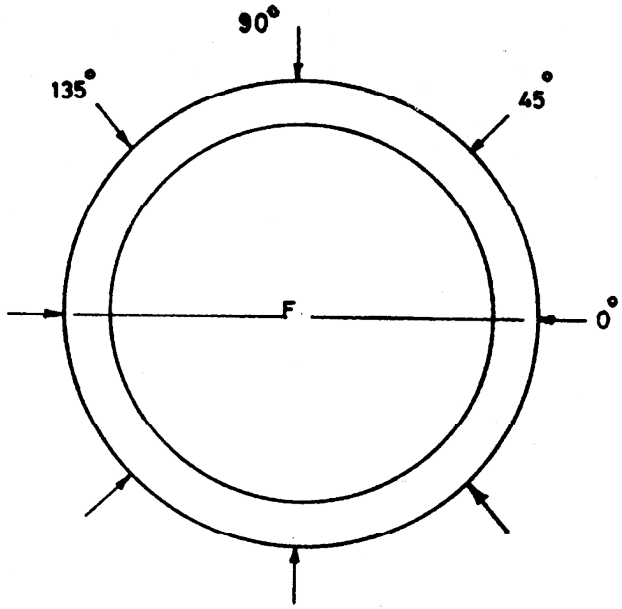

1. Use a micrometer to measure the outside diameter of the brg. cups at four locations 0°, 45°, 90°, and 135°.
2. Record readings on the table below, all dimensions must agree within 0.001" TIR (0.025mm).
3. Average the dimensions for comparison with bore dimension "D" Fig. 1.

ORIENTATION	BRG. 1 DIMENSION	BRG. 2 DIMENSION
0°		
45°		
90°		
135°		
F AVG	F^1 AVG =	F^2 AVG =

$$FAVG = \frac{F_0 + F_{45} + F_{90} + F_{135}}{4}$$

Figure. 3: Journal Bearing Outside Diameter&FigA-2 of Annexure.

COPYRIGHT AND CONFIDENTIAL
The information on this document is the property of BHARAT HEAVY ELECTRICALS LIMITED,
It must not be used directly or indirectly in any way detrimental to the interest of the company.

COPYRIGHT AND CONFIDENTIAL
The information on this document is the property of BHARAT HEAVY ELECTRICALS LIMITED,
It must not be used directly or indirectly in any way detrimental to the interest of the company.

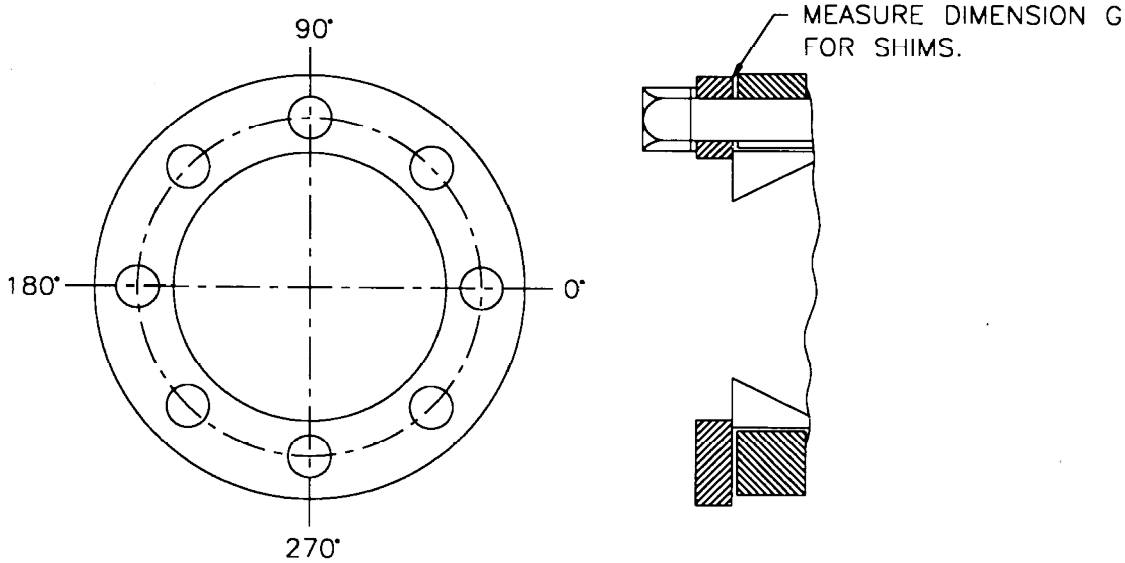

1. Measure clearance between the bearing housing and bearing keeper with a feeler gauge at four locations.
2. Record measurements on table below:
3. Calculate average gap measurement.

ORIENTATION	DIMENSION "G"
0°	
90°	
180°	
270°	
$G_{AVG} = \frac{G_0 + G_{90} + G_{180} + G_{270}}{4}$	

Figure.4. Bearing Keeper Shim Pack.

SIZE	GRADE (SAE)	TORQUE (FT-LB)
1/4" X 20	2	6
	5	10
	7	13
	8	14
5/16" X 18	2	12
	5	19
	7	25
	8	29
3/8" X 16	2	20
	5	33
	7	44
	8	47
1/2" X 13	2	47
	5	78
	7	110
	8	119
5/8" X 11	2	96
	5	154
	7	215
	8	230
3/4" X 10	2	155
	5	257
	7	360
	8	380
7/8" X 9	2	206
	5	382
	7	570
	8	600
1" X 8	2	310
	5	587
	7	840
	8	900
1 1/8" X 7	2	480
	5	794
	7	1325
	8	1430

COPYRIGHT AND CONFIDENTIAL
The information on this document is the property of BHARAT HEAVY ELECTRICALS LIMITED,
It must not be used directly or indirectly in any way detrimental to the interest of the company.

1 1/4" X 7	2	675
	5	1105
	7	1825
	8	1975
1 3/8" X 6	2	900
	5	1500
	7	2500
	8	2650
1 1/2" X 6	2	1100
	5	1775
	7	3000
	8	3200
1 3/4" X 5	2	1900
	5	3150
	7	5300
	8	5650
2" X 4 1/2	2	2750
	5	4550
	7	7500
	8	8200

COPYRIGHT AND CONFIDENTIAL
The information on this document is the property of BHARAT HEAVY ELECTRICALS LIMITED,
It must not be used directly or indirectly in any way detrimental to the interest of the company.

COPYRIGHT AND CONFIDENTIAL
The information on this document is the property of BHARAT HEAVY ELECTRICALS LIMITED,
It must not be used directly or indirectly in any way detrimental to the interest of the company.

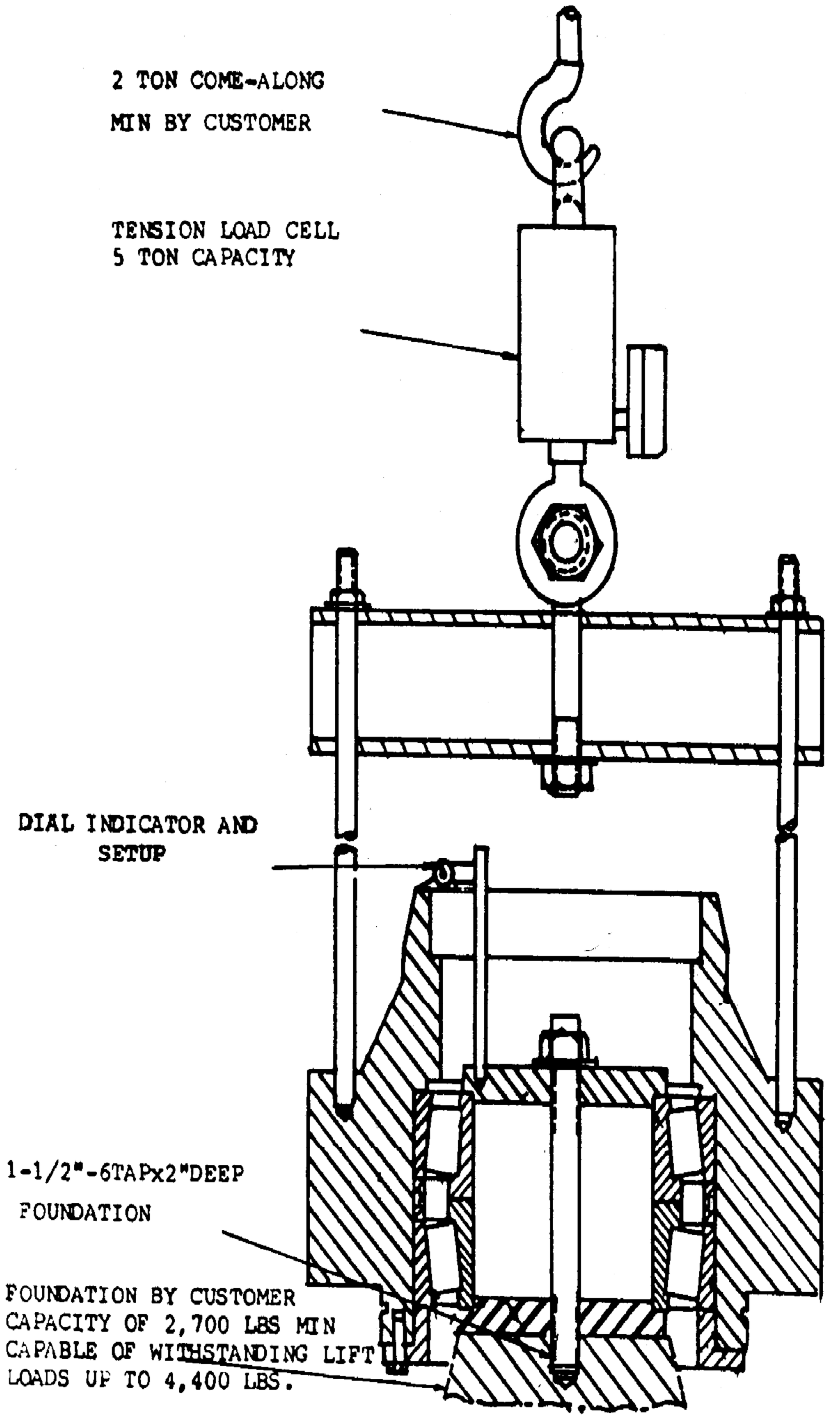

FIG-6 End Play fixture.

COPYRIGHT AND CONFIDENTIAL
The information on this document is the property of BHARAT HEAVY ELECTRICALS LIMITED,
It must not be used directly or indirectly in any way detrimental to the interest of the company.

Trial	Indicator	Indicator Readings			AVG. Readings
		No Load	Lifted	No Load	Lifted Position
1	A		H_A		H^1 AVG. = $\frac{H_A+H_B+H_C}{3}$
	B		H_B		
	C		H_C		
2	A		H_A		H^2 AVG =
	B		H_B		
	C		H_C		
3	A		H_A		H^3AVG =
	B		H_B		
	C		H_C		
4	A		H_A		H^4AVG =
	B		H_B		
	C		H_C		
5	A		H_A		H^5AVG =
	B		H_B		
	C		H_C		

$$H_{AVG} = \frac{H1AVG + \quad + HX_{AVG}}{X}$$

Note: Refer to Procedures in Text, items 5.5 to 5.10

Figure: 7 Upper Bearing End Play

ORIENTATION	B^U = UPP.DIMNS	B^L = LWR DIMNS.	AVERAGE
0º			
45º			
90º			
135º			
$\frac{B_0+B_{45}+B_{90}+B_{135}}{4}$	B^UAVG	B^LAVG	
$B_{AVG}= \frac{B^U AVG+ B^L AVG}{2}$			B_{AVG}

Roll Bore (Reference figure -1)

ORIENTATION	F_u = UPP.DIMNS	F^L = LWR DIMNS.	AVERAGE
0º			
45º			
90º			
135º			
$\frac{F_0+F_{45}+F_{90}+F_{135}}{4}$	F^UAVG	F^LAVG	
$F_{AVG}= \frac{F^U AVG+ F^L AVG}{2}$			F_{AVG}

Bearing Housing Outside Diameter (Reference figure -3)

INTEREFERENCE = F_{AVG}- B_{AVG} =

NOTE: THE INTEREFERENCES MUST BE AT LEAST 0.001” (.0.025mm)
AND LESS THAN 0.009” (0.229mm)

FIGURE 8. ROLL/BEARING HOUSING INTEREFERENCE.

COPYRIGHT AND CONFIDENTIAL
The information on this document is the property of BHARAT HEAVY ELECTRICALS LIMITED,
It must not be used directly or indirectly in any way detrimental to the interest of the company.

COPYRIGHT AND CONFIDENTIAL
The information on this document is the property of BHARAT HEAVY ELECTRICALS LIMITED,
It must not be used directly or indirectly in any way detrimental to the interest of the company.

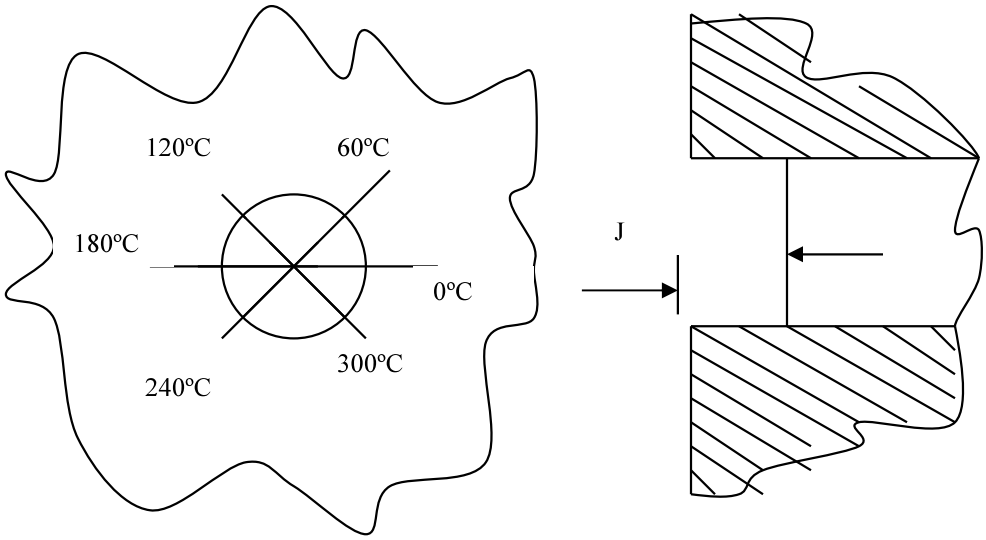

1. USE A DEPTH MICROMETR TO MEASURE "J" AT SIX LOCATIONS.
2. RECORD J3, CALCULATE "J" AVG.

LOCATION	J DIMENSION			
	1ST TRIAL	2ND TRIAL	3RD TRAIL	4TH TRAIL
0º				
60º				
120º				
180º				
240°				
300°				
$\frac{J_0+J_{60}+J_{120}+J_{180}+J_{240}+J_{300}}{6}$	$J1_{AVG}$ =	$J2_{AVG}$ =	$J3_{AVG}$ =	$J4_{AVG}$ =

SHIM PACK = J_{AVG} - 0.005"

SHIM PACK mm = J_{AVG} – 0.127 mm

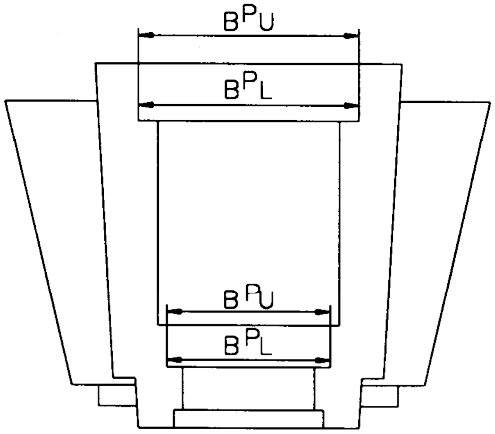

Note:

For Bore determination use procedures Figure 1:

For Bearing O.D. use procedure Figure 3.

ORIENTATION	BRG. BORE B^BL B^BU	PILOT BORE B^PL B^PU	LWR. BRG. CUP F^3 OUTSIDE DIM
0°			
45°			
90°			
135°			
$\frac{B_0+B_{45}+B_{90}+B_{135}}{4}$	$C^B L = C^B U =$	$C^P L = C^P U =$	F^3 AVG =
$\frac{C_L + C_U}{2}$	$D^B =$	$D^P =$	

$$F^3_{AVG} = \frac{F_0 + F_{45} + F_{90} + F_{135}}{4}$$

Bearing/ Bore Interference $= F^3_{AVG} - D^B =$ _____

Figure-10: Lower Journal Housing Bore Dimensions & Interference.

COPYRIGHT AND CONFIDENTIAL
The information on this document is the property of BHARAT HEAVY ELECTRICALS LIMITED,
It must not be used directly or indirectly in any way detrimental to the interest of the company.

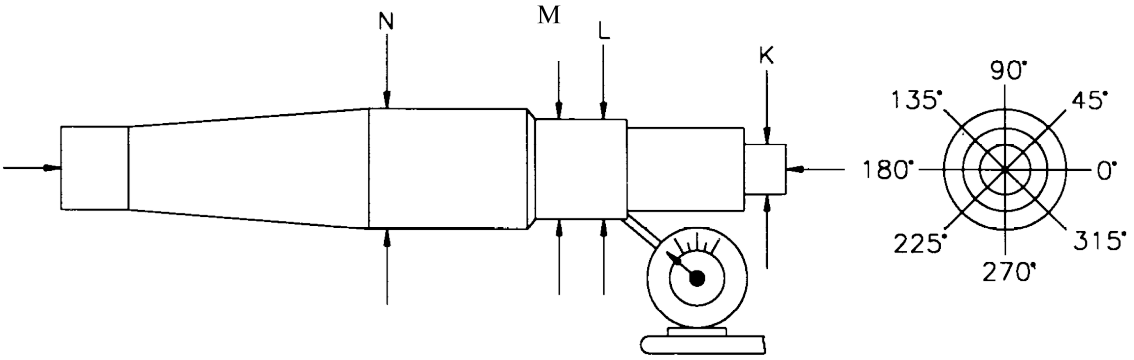

Shaft Outside Diameter Measurement. Use a Micrometer.

ORIENTATION	L.R. BRG. SEAT	UPP. BRG. SEAT		SEAL RING SEG
	K	L	M	N
0°				
45°				
90°				
135°				
AVG = $\frac{0+45+90+135}{4}$				

Shaft straightness measurements, mount shaft on live centers & use a dial indicator to check at K, L, M & N. Dial indicator reading should not vary more than 0.001" (0.025mm) for out of round.

ORIENTATION	K	L	M	N
0°				
45°				
90°				
135°				
180°				
225°				
270°				
315°				

Figure:11 Shaft out of Round and Straightness

COPYRIGHT AND CONFIDENTIAL
The information on this document is the property of BHARAT HEAVY ELECTRICALS LIMITED,
It must not be used directly or indirectly in any way detrimental to the interest of the company.

COPYRIGHT AND CONFIDENTIAL
The information on this document is the property of BHARAT HEAVY ELECTRICALS LIMITED,
It must not be used directly or indirectly in any way detrimental to the interest of the company.

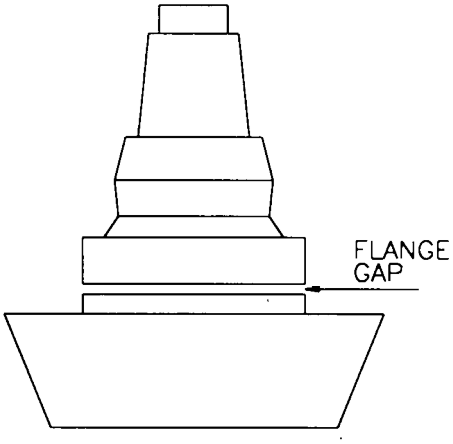

Orientation	1st TRIAL GAP	2nd TRIAL GAP	3 rd TRIAL GAP
0°			
45°			
90°			
135°			
180°			
225°			
270°			
315°			
AVG = $\frac{0 + 45 + \ldots\ldots\ldots 135}{8}$			

UPPER JOURNAL HOUSING FLANGE GAP

$$\text{Shim Pack} = \text{AVG Gap} + \frac{\text{Bearing end play, Step 5.12}}{2.} + \text{End play 'A' Table - 6}$$

SHIM PACK = ( ) + ( )+( )

SHIM PACK = ( ) mm

Figure 12: Journal Housing Flange Gap Shims.

COPYRIGHT AND CONFIDENTIAL
The information on this document is the property of BHARAT HEAVY ELECTRICALS LIMITED,
It must not be used directly or indirectly in any way detrimental to the interest of the company.

TRIAL	INDICATOR	INDICATOR READINGS			AVG. READINGS
		No Load	Lifted	No. Load	LIFTED POSITION
1	A		H_A		H^1 AVG = $\frac{H_A + H_B}{2}$
	B		H_B		
2	A		H_A		H^2 AVG =
	B		H_B		
3	A		H_A		H^3 AVG =
	B		H_B		
4	A		H_A		H^4 AVG =
	B		H_B		
5	A		H_A		H^5 AVG =
	B		H_B		
$H_{AVG} = \frac{H^1AVG + H^2AVG + H^3AVG + H^4AVG + H^5AVG}{5} =$					

Note: Refer to Procedure in text, Item 12.0

Permitted Assembly End Play = $\frac{\text{Bearing End Play, Step 5.12}}{2}$ +(End Play '2' Table 6)

H_{AVG} = Permitted Assembly End Play ± 0.001 "

( ) = ( ) + ( ) ± 0.001"

If H_{AVG} is not within ± 0.001" of the permitted assembly endplay, the journal housing flange gap shims should be changed.

Figure 13: K Journal Assembly End - Play.

ORIENTATION	1st TRIAL GAP mm	2nd TRIAL GAP mm	3 rd TRIAL GAP mm
0°			
45°			
90°			
135°			
180°			
225°			
270°			
315°			
AVG GAP = $\frac{0 + 45 + \ldots\ldots\ldots\ldots 315}{8}$			

Upper Journal Head Skirt Flange Gap

Figure 14: Journal Head Skirt Flange Gap.

COPYRIGHT AND CONFIDENTIAL
The information on this document is the property of BHARAT HEAVY ELECTRICALS LIMITED,
It must not be used directly or indirectly in any way detrimental to the interest of the company.

COPYRIGHT AND CONFIDENTIAL
The information on this document is the property of BHARAT HEAVY ELECTRICALS LIMITED,
It must not be used directly or indirectly in any way detrimental to the interest of the company.

APPENDIX-A

UPPER BEARING END PLAY

1023 -1003	Pulveriser Journal Assy. 110-00333.
963 – 1003	Pulveriser Journal Assy. 101-00921
963 – 1003	Pulveriser Journal Assy. 101-00920

SPACER GRINDING:

1. Measure and record the upper journal housing bearing bore. Use procedures on figure A-1. Determination of Bore Diameters.

2. Measure and record the bearings outside diameter use procedures on figure A-2. Journal Bearing Outside diameter. The average measurements must be between 18.000” and 18.002” or the bearing must be rejected.

3. Measure and record the spacer length, use procedures figure A-3. Journal Bearing Spacer. Length determination.

4. Record the lateral clearance of the bearing on page A-5. The calculation sheet. The value is etched on the outside diameter of the spacer.

5. Follow the worksheet calculations to determine the spacer grind value. Grind this amount off the bearing spacer then measure and record the length of the ground spacer on fig A-3. Return to section II step 3.3 of the assembly procedures.

6. Retain the figures and calculation sheet for maintenance records.

COPYRIGHT AND CONFIDENTIAL
The information on this document is the property of BHARAT HEAVY ELECTRICALS LIMITED,
It must not be used directly or indirectly in any way detrimental to the interest of the company.

Spacer Grinding Calculations.

Lateral clearance = (etched on O.D. of Spacer)

Lateral clearance = _____

Fit = Average bearing O.D (figure 2-A) – Average housing bore (fig – 1A).

Fit = ( ) – ( )

Fit = _____

Spacer grind value = Lateral clearance – 0.007” – (2.62 x (fit)

Spacer grind value = ( ) - 0.007” – (2.62 x ( )

Spacer grind value = _____

RECORD OF REVISIONS

REV. NO	DATE	REVISION DETAILS	REVISED	APPROVED
01	15.03.14	Table 6 modified	Aman	S Ghatge
02	21.01.22	Table names updated	Teja	Aman

COPYRIGHT AND CONFIDENTIAL
The information on this document is the property of BHARAT HEAVY ELECTRICALS LIMITED,
It must not be used directly or indirectly in any way detrimental to the interest of the company.

FIRST ANGLE PROJECTION

(ALL DIMENSIONS ARE IN mm)

DRG.NO. HY-312.A.02.F

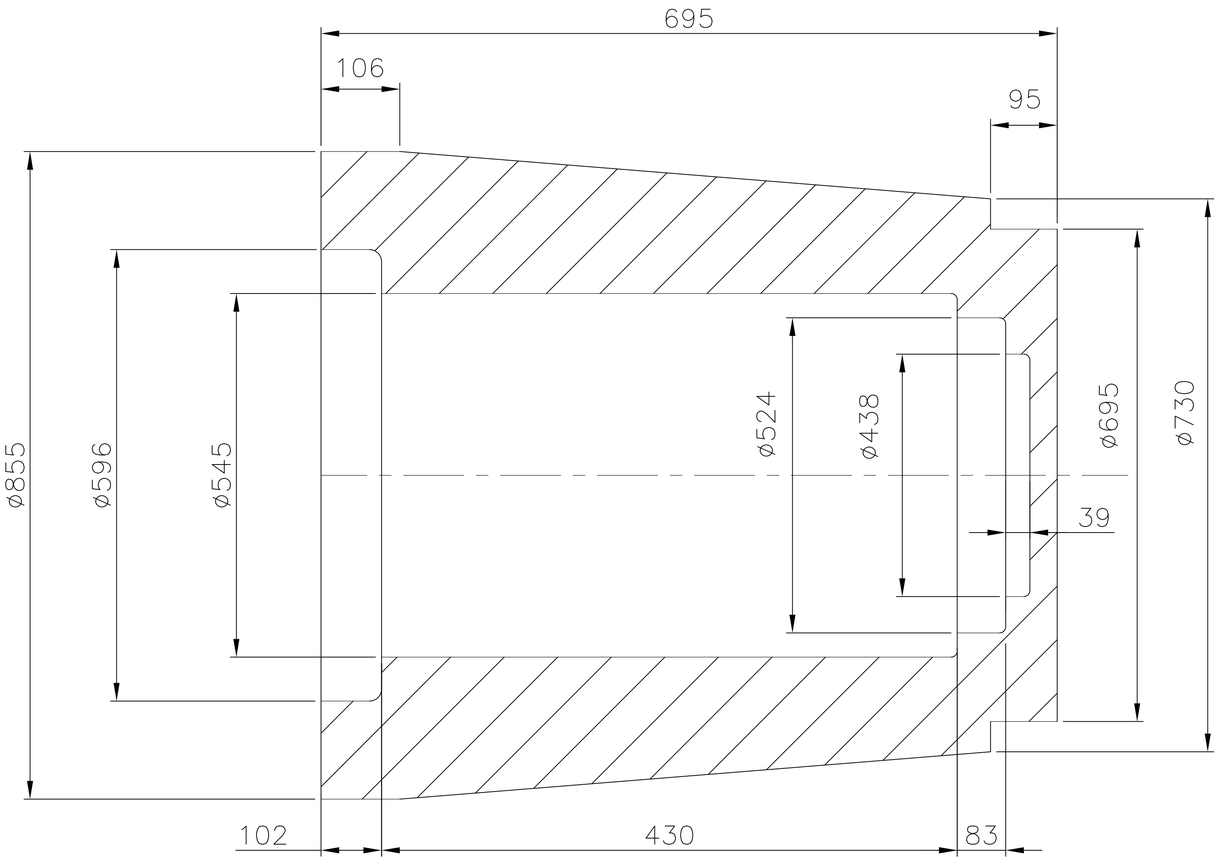

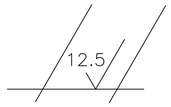

NOTES:-

1. FORGING SHOULD BE AS PER SPECN. AA19332
2. CHAMFER SHARP CORNERS TO R2 & FILLET RADIUS TO R3
3. TOLERANCE ON DIAMETER AND LENGTH ±1 mm
4. TEST ULTRASONICALLY AS PER SPEC AA 0850118 CAT2

ITEM NO	DESCRIPTION	DRAWING NO.	VAR. NO.	RAW MATERIAL SIZE OR CASTING DRG.NO. OR FORGING DRG.NO.	MATERIAL CODE / MATERIAL SPECN.	NET WT.	GROSS WT.
01	FORGING				AA19332	1475 / 1	

THE FOLLOWING CONDITIONS APPLY EXCEPT OTHERWISE STATED...

1. REF.TO HY0230261 FOR UNSPECIFIED TOLERANCES.
2. CHAMFER M/CD SHARP EDGES 1.2 TO 1.0 AT 45°.
3. INTERNAL M/CD CORNER RADII 1 TO 0.7.
4. THE SURFACE ROUGHNESS WHEREVER NOT SHOWN SHALL BE TAKEN FROM THE SURFACE ROUGHNESS SHOWN OUT SIDE BACK SLASHES GIVEN AT THE TOP MOST RIGHT CORNER OF THE DRG.

TYPE OF PRODUCT OR NAME OF CUSTOMER/PROJECT: XRP-1003 MILL KORBA & RAMAGUNDEM

BHARAT HEAVY ELECTRICALS LTD. VARANASI

	NAME	SIGN.	DATE	NO.OF VAR.
DRN.	D.BASAK		2.07.04	/
CHD.	S.TEWARI		2.07.04	
APPD.	V.KUMAR		2.07.04	

DEPT. PULV ENGG.	SCALE	WEIGHT (KG)	REF. TO ASSY DRG.	ITEM NO.	NO.OF ITEMS
CODE 446	1:4	1475	16100000375	/	/

TITLE: L.J.HOUSING R/MCD FORGING

DRAWING NO. HY-312.A.02.F — REV. 00

SHEET NO. 01 — NO OF SHEETS 01

REV.	DATE	ALTERED		REV.	DATE	ALTERED	
		CHD.	APPD.			CHD.	APPD.
ZONE				ZONE			

THE INFORMATION ON THIS DOCUMENT IS THE PROPERTY OF BHARAT HEAVY ELECTRICALS LTD. IT MUST NOT BE USED DIRECTLY OR INDIRECTLY IN ANY WAY DETRIMENTAL TO THE INTEREST OF THE COMPANY.

FILE NAME: HY-312.A.02.F

HERP MADE DRG

LOCATION:

INVENTORY NO.

TD-151/REV. 03 SIZE A3